City of El Paso – City Plan Commission Staff Report

REVISED

Case No:	PZRZ16-00005
Application Type:	Rezoning
CPC Hearing Date:	June 2, 2016
Staff Planner:	Adriana Martinez, 915-212-1611, MartinezAD@elpasotexas.gov
Location:	Montana Ave. & Chelsea St. Parcel 1: 5331 Montana & 5305 Montana (C-2) Parcel 2 & 3: 1012 Cardon Street (C-2sp / R-4sp)
Legal Description:	A portion of Tract 4A, now known as 4-C-1, Morehead Block, and Lots 1, 2, 4, and 5, Block 1, Del Mesa Addition, City of El Paso, El Paso County, Texas
Acreage:	1.3028 acres
Rep District:	2
Existing Zoning:	Parcel 1: C-2 (Commercial) Parcel 2 & 3: (C-2sp / R-4sp)
Existing Use:	Parcel 1: Restaurant & Parking Lot Parcel 2 & 3: Residential / Vacant
C/SC/SP/ZBA/LNC:	SP Ordinance No. 14163, dated August 24, 1999 *(doesn't apply)*
Request:	Parcel 1: From C-2 (Commercial) to C-1 (Commercial) Parcel 2 & 3: From C-2sp / (Commercial /sp) & R-4/sp (Residential/sp) to C-1 (Commercial)
Proposed Use:	Commercial Retail Pharmacy (with Drive-Thru)
Property Owner:	Parcel 1: El Paso West Airport LTD Parcel 2 & 3: William Welsh (Executor of the Estate)
Applicant:	Joaquin Orozco; First Hart Realty Company
Representative:	James K. Farrelly; Linfield & Hunter & Junius, Inc.

SURROUNDING ZONING AND LAND USE
North: C-1/c/sp (Commercial/condition) / Vacant
South: C-1 (Commercial)/ Restaurant / Shopping Center
East: C-1 (Commercial) / Commercial Retail Pharmacy (with Drive-Thru)
West: C-2/R-4 (Commercial) / (Residential) / Restaurant / Single-Family Dwelling

PLAN EL PASO DESIGNATION: G-4, Suburban (Walkable) (Central Planning Area)
NEAREST PARK: Mesa Terrace Park (2,131 feet)
NEAREST SCHOOL: Hillside Elementary School (3,152 feet)

NEIGHBORHOOD ASSOCIATIONS

El Paso Central Business Association
United Neighborhood Association

NEIGHBORHOOD INPUT

Notice of a Public Hearing was mailed to all property owners within 300 feet of the subject property on May 5, 2016. On April 20, 016, Staff, District #2, and the developers did meet with United Neighborhood Association, who stated their support of the rezoning and the proposed development. The planning department received one call and one email in opposition of the proposed development.

APPLICATION DESCRIPTION

The applicant is requesting to rezone the subject property to C-1 (Commercial District) to allow the construction of a Commercial Retail Pharmacy (with Drive-Thru). The proposed development features a new 11,945 sq. ft. Retail Pharmacy Building with 11,187 sq. ft. (19.7%) of landscaping. Additionally, the

applicant is proposing for a 15 ft. landscaping buffer along Cardon St. to protect the privacy of nearby residents. Forty parking spaces are required and 50 are provided, to include ADA, and bicycle racks.
The property has 3 different access points, Cardon St., Montana Ave., and Chelsea St.

PLANNING DIVISION RECOMMENDATION
The Planning Division recommends **approval** of rezoning the subject property to C-1 (Commercial) with the following condition to mitigate for the increased intensity of use generated by the proposed zone change adjacent to existing residential zone and use districts to the subject property.

1. *That a detailed site development plan be reviewed and approved per the El Paso City Code prior to building permits being issued.*

The approval recommendation is based on the compatibility with existing commercial and residential zoning in the area. Additionally, the proposed development is compliant with the G-4, Suburban (Walkable) land use designation in the Central Planning Area.

Plan El Paso- Future Land Use Map Designation
All applications for rezoning shall demonstrate compliance with the following criteria:

G-4 – Suburban: This sector applies to modern single-use residential subdivisions and office parks, large schools, and parks, and suburban shopping centers. This sector is generally stable but would benefit from strategic suburban retrofits to supplement the limited housing stock and add missing civic and commercial uses.

The purpose of the C-1 (Commercial) zoning district is to provide a compatible neighborhood convenience goods and services that serve day-to-day needs. Permit locations for business and professional offices and retail category uses within adjacent residential areas of medium and high densities.

COMMENTS:

Planning and Inspections Department- Planning Division - Transportation
Recommend approval. A TIA is required & deferred to Platting Stage.

Note: All existing / proposed paths of travel (accessible sidewalks, wheelchair access curb ramps and driveways) within public rights-of-way shall be in compliance with current ADA/TAS rules and regulations and the current City of El Paso Design Standards for Construction.

Planning and Inspections Department - City Development & Permitting- Landscape
Recommended approval with condition:

Note: Condition being placement of trees.
Landscape calculation are correct and this parcel has the right amount of plant material; however, the tree locations are not to code and will have to be revised at time of permit. Trees missing in the right of way of Chelsea, and portion of Cardon St. and trees on Montana show to be in the sidewalk area.

Planning and Inspections Department - Land Development
We have reviewed subject plans and recommend that the applicant addresses the following comments.

Note: No objections.

- Approval of the site plans by CPC constitutes a determination that the applicant is in compliance with the minimum provisions. Applicant is responsible for the adequacy of such plans, insuring that stormwater is in compliance with ordinances, codes, DSC, and DDM. Failure to comply may require the applicant to seek re-approval of the site plans from CPC.

Sun Metro
Sun Metro does not oppose this request

Note: Sun Metro has an existing bus stop directly adjacent to the subject property to be relocated. / Coordinating with Sun Metro

Fire Department
No objections to proposed rezoning.

TxDot
Not in a State Roadway.

El Paso Water Utilities

Water:

1. There is an existing 20-inch diameter water transmission main located along the north side of Montana Avenue, approximately 20-feet south of and parallel to the northern right-of-way line of Montana Avenue. No direct service connections are allowed to this water transmission main.

2. There is an existing 6-inch diameter water main located along the north side of Montana Avenue, approximately 27-feet south of and parallel to the northern right-of-way line of Montana Avenue. Water service connections are allowed to this water main.

3. There is an existing 12-inch diameter water transmission main (flow line) located along the north side of Montana Avenue, approximately 30-feet south of and parallel to the northern right-of-way line of Montana Avenue. No direct service connections are allowed to this main (flow line).

4. There is an existing 6-inch diameter water main located along the east side of Cardon Street, approximately 15-feet west of and parallel to the eastern right-of-way line of Cardon Street. Water service connections are allowed to this water main.

5. There is an existing 8-inch diameter water main located along the east side of Chelsea Street, approximately 25-feet west of and parallel to the eastern right-of-way line of Chelsea Street. Water service connections are allowed to this water main.

6. EPWU records indicate there are three (3) existing ¾-inch water meters serving to the proposed subject property from 6-inch water main on Cardon Street. The service addressees for the water meters are 5305 Montana Avenue (active), 1015 Chelsea Street (vacant) and 1012 Cardon Street (vacant).

7. Previous water pressure readings conducted on fire hydrant number 1634 located at the corner of Montana Avenue and Cardon Street have yielded a static pressure of 130 pounds per square inch (psi), residual pressure of 120 psi, discharge of 1,547 gallons per minute (gpm).

Sanitary Sewer:

1. There is an existing 10-inch diameter sanitary sewer main located along the south side of Montana Avenue, approximately 20-feet north of and parallel to the southern right-of-way line of Montana Avenue. Direct service connections are allowed to this sanitary sewer main.

2. There is an existing 8-inch diameter sanitary sewer main located along the west side of Cardon Street, approximately 20-feet east of and parallel to the western right-of-way line of Cardon Street. Direct service connections are allowed to this sanitary sewer main.

3. There is an existing 8-inch diameter sanitary sewer main located along the west side of Chelsea Street, approximately 32-feet east of and parallel to the western right-of-way line of Chelsea Street. Direct service connections are allowed to this sanitary sewer main.

4. Reclaimed Water:
5. There is an existing 30-inch diameter reclaimed water main located along the west side of Chelsea Street, approximately 18-feet east of and parallel to the western right-of-way line of Chelsea Street. No direct service connections are allowed to this reclaimed water main.

General:

1. Montana Avenue is a Texas Department of Transportation (TxDOT) right-of-way. All proposed water and sanitary sewer work to be performed within Montana Avenue right-of-way requires written permission from TxDOT.

2. EPWU requires a new service application to provide addition service to the property. New service applications are available at 1154 Hawkins, 3rd floor and should be made 6 to 8 weeks in advance of construction to ensure water for construction work. A site plan, utility plan, grading and drainage plans, landscaping plan, the legal description of the property and a certificate-of-compliance are required at the time of application. Service will be provided in accordance with the current EPWU – PSB Rules and Regulations. The applicant is responsible for the costs of any necessary on-site and off-site extensions, relocations or adjustments of water and sanitary sewer lines and appurtenances.

Stormwater:

1. Provide an acceptable drainage plan in accordance with Section 19.01.050 of the current City Ordinance when submitting construction plans.

2. Not required but recommend:

   - Using principles of low impact development (such as recessed landscaping, rainwater harvesting, and porous pavements) to reduce the amount of developed stormwater runoff.

Attachments:

Attachment 1: Zoning Map
Attachment 2: Aerial Map
Attachment 3: Future Land Use Map
Attachment 4: Detail Site Development Plan
Attachment 5: Elevations
Attachment 6: Opposition Email

ATTACHMENT 1: ZONING MAP

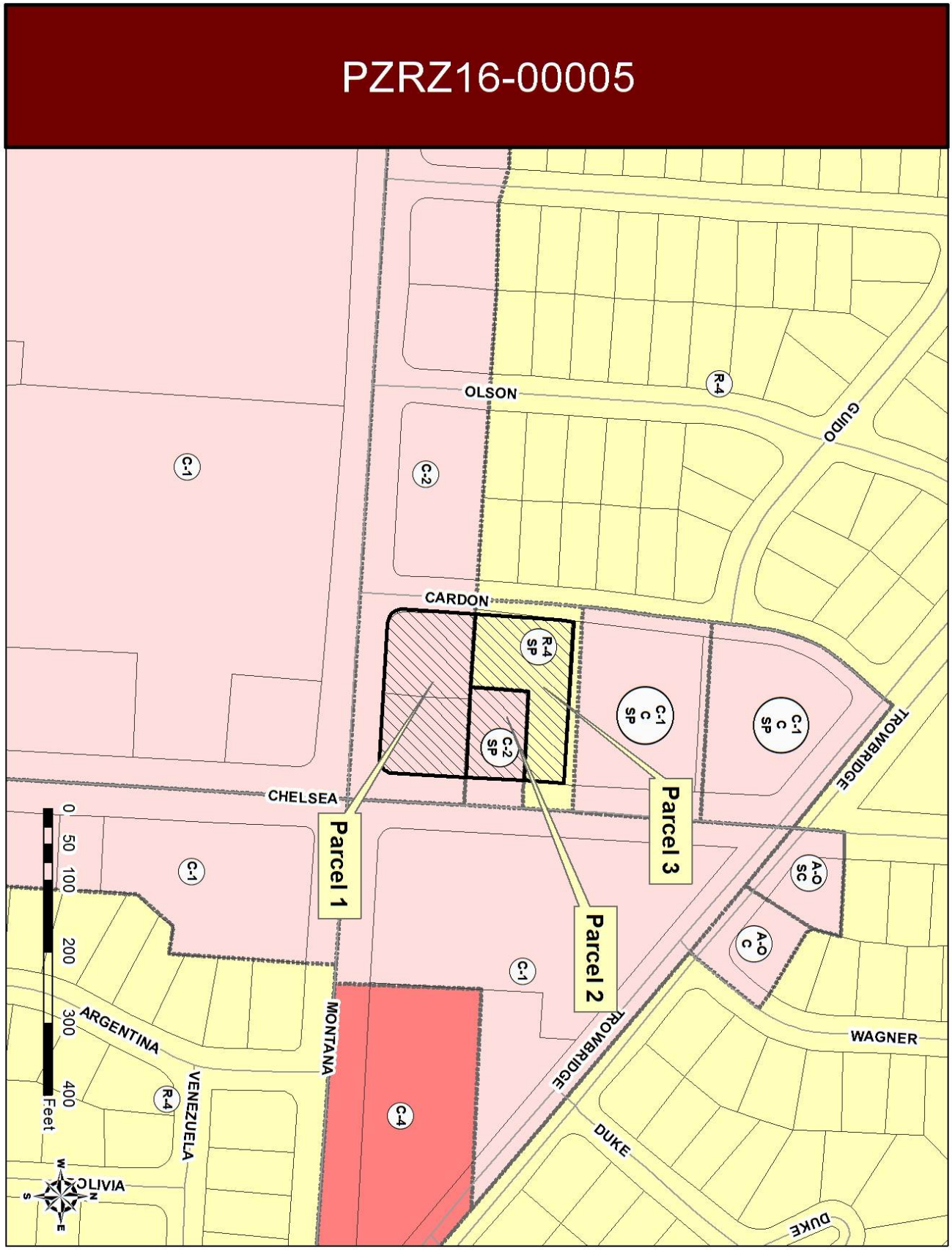

ATTACHMENT 2: AERIAL MAP

ATTACHMENT 3: FUTURE LAND USE MAP

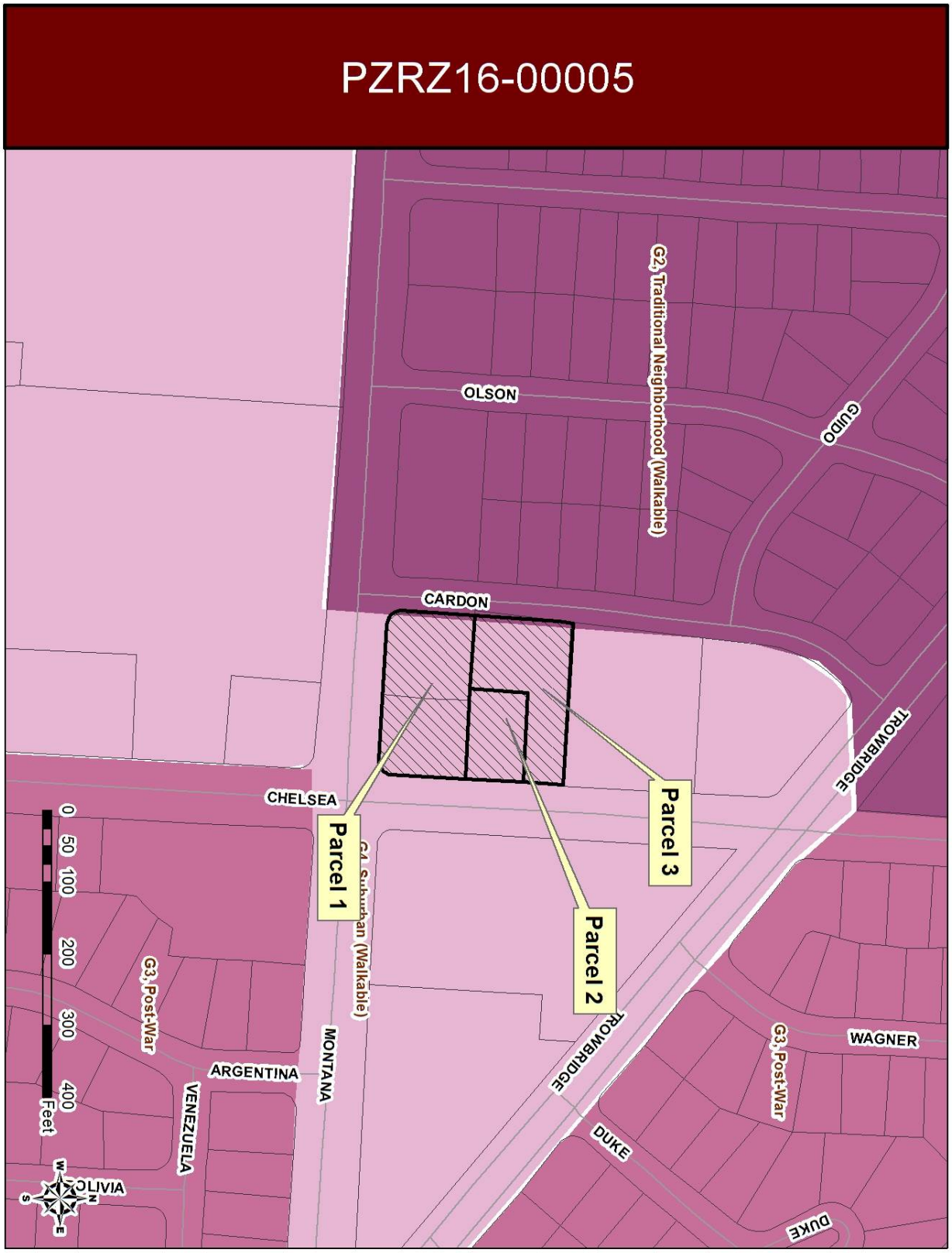

ATTACHMENT 4: DETAILED SITE DEVELOPMENT PLAN

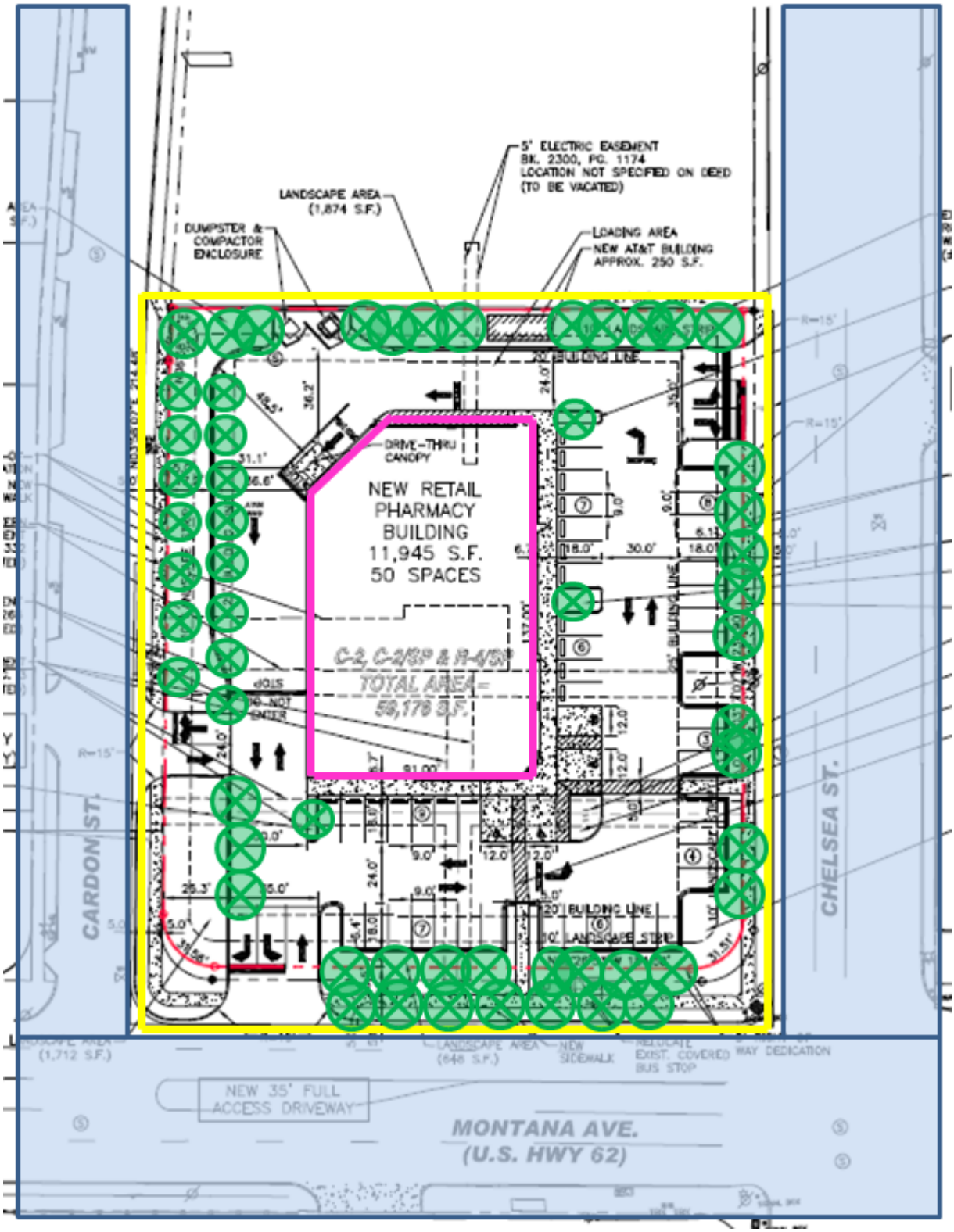

ATTACHMENT 5: ELEVATIONS

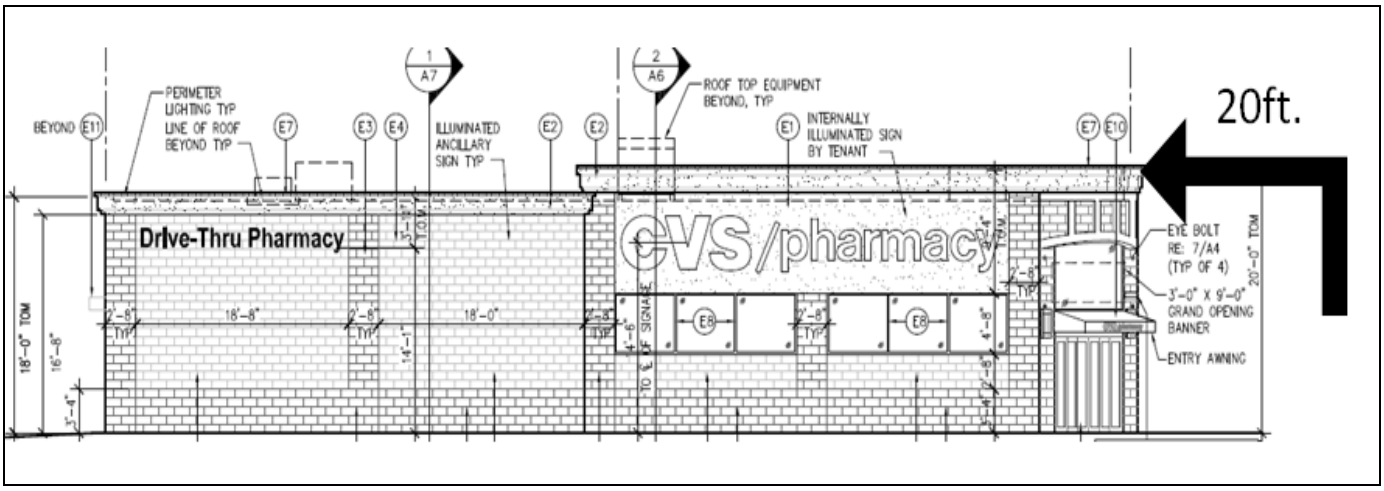

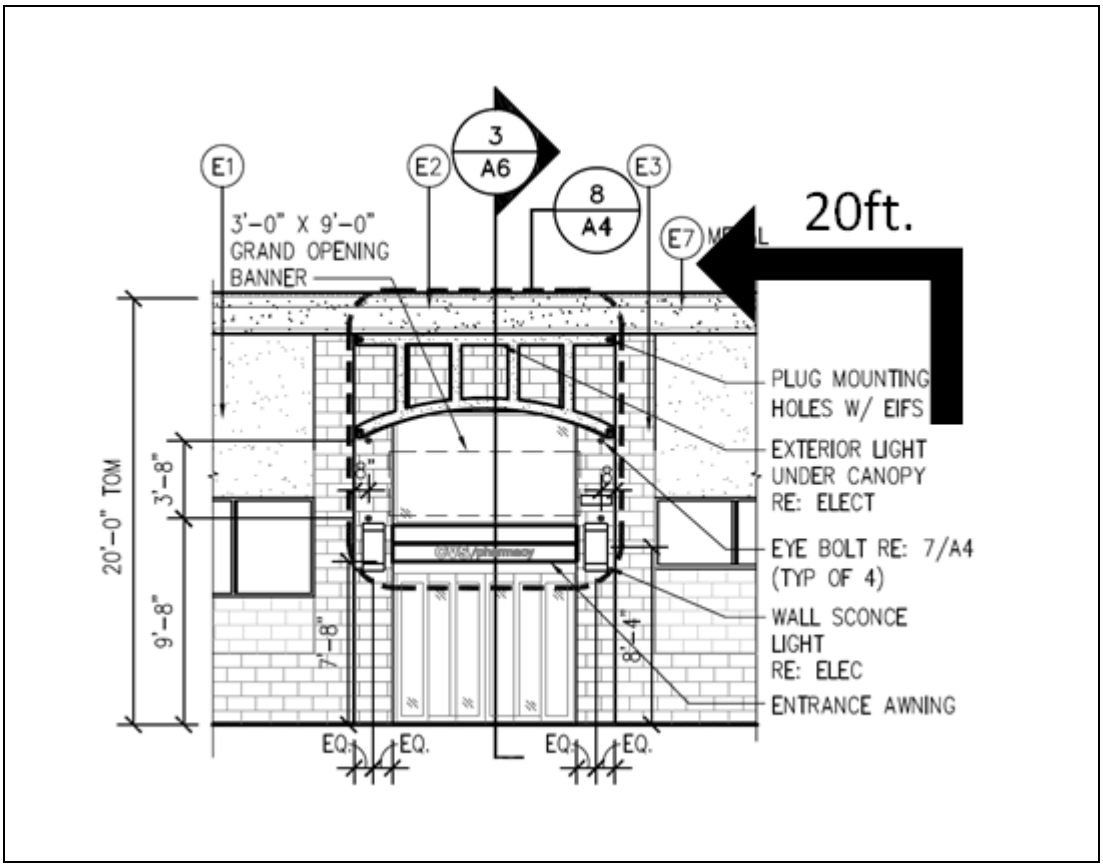

ATTACHMENT 6: OPPOSITION EMAIL

From: Mayela Sepulveda
To: Martinez, Adriana
Subject: CVS where in the Chicos Tacos location
Date: Thursday, May 26, 2016 11:05:43 AM

To whom it may concern:
I am writing this email to express my disapproval at the selection of a CVS for this area. I do not care for Chicos but I do care for my family still residing in this community. I am very disappointed in the lack of foresight for this project. My family lives in this area and unfortunately whatever representative is in charge of looking out for this community has done a poor job at it. This area has lots of needs. One of the needs I see is lack of recreational places for this community. The Chelsa pool has been shut down and I don't foresee it being open. This area also has many elderly and you see them walking to Alberstons for groceries pushing the grocery carts to their homes. What about a senior center in this area? What about a recreation center in this area? How about a medical plaza in this area? Can you do better than adult shops and Walmart/CVS? I am sure you will notice that the bus stops in this area frequently. This should tell you that many in the community rely on public transportation. My mother is one of the individual living in this community. Do you know where she gets her medical help? University Medical Center or aka Thomason. Why? Thats the closest medical facility in the area. Can you guys this more deeply about the needs of this community? Again i would prefer a small medical plaza, senior center or recreation center. Please forward this email to whom ever is responsible for this area .
Thank you,
Mayela Sepulveda