ZBA10-00045 4729 Lucy Drive J. E. Singleton

Applicant requests a Special Exception under Section 2.16.050 K (Carport over a Driveway) in an R-3 (Residential) zone.

The request is for a 20' by 21'7" carport of which a 20' by 14' portion is proposed to encroach in the front yard setback and to be located to within 7'10" of the front property line.

The required cumulative front and rear yard setback total is 50 feet in the R-3 zone district.

BACKGROUND

The applicants are requesting the addition of a carport that is proposed to be located to within 7'10" of the front property line. There are no utility easements at the front property line. The applicant's plans indicate that the materials used for the carport will match the existing house with a roof that will be lower than the roofline of the house. The Engineering Department-Construction Management Division has reviewed the structural plans;however, the review report is pending.

CALCULATIONS

Permitted carport area = 439.40 sq. ft. (2,197 sq. ft. first floor area ÷ 5)
Requested area of carport = 432 sq. ft. (20' x 21.6')
Portion proposed to encroach in required front yard setback = 280 sq. ft. (20' x 14')
Required front yard setback = 20'
Requested front yard setback = 7'10"

STAFF RECOMMENDATION

Pending.

The Zoning Board of Adjustment is empowered under Section 2.16.050 K to:

Permit the encroachment into the required front yard setback for a lot in a residential (R) district beyond other allowed modifications for a carport covering a driveway; provided, however, that:

1. The residence has been in existence with a valid certificate of occupancy for one continuous year; and,
2. The zoning board of adjustment has received the written approval of the structural design from the building permits and inspection division of the development services department; and,
3. The carport shall be constructed of the same material, architectural design, and color scheme as the residential structure, open on three sides, and attached to the main structure; and,
4. The area of the carport shall not exceed one-fifth of the first-floor area of the dwelling, nor shall the carport rise above the highest point of the roof of the dwelling; and,
5. Elevation drawings of the proposed structure shall be submitted; and,
6. For a duplex, the total of all extensions granted shall not exceed one-third the average width of the site, and the total of all extensions for either unit of the duplex shall not exceed two-thirds of the average width of that unit; and,
7. Unless otherwise provided in this chapter, all remaining areas of the required front yard shall be permanent open space; and,
8. There is no other reasonable alternative to provide a carport in the front yard of the subject property without exceeding the encroachments allowed in Title 20 of this code; and,
9. The extension shall not permit the creation of an additional dwelling unit for rental purposes nor shall it constitute an extension of the living area of the dwelling.

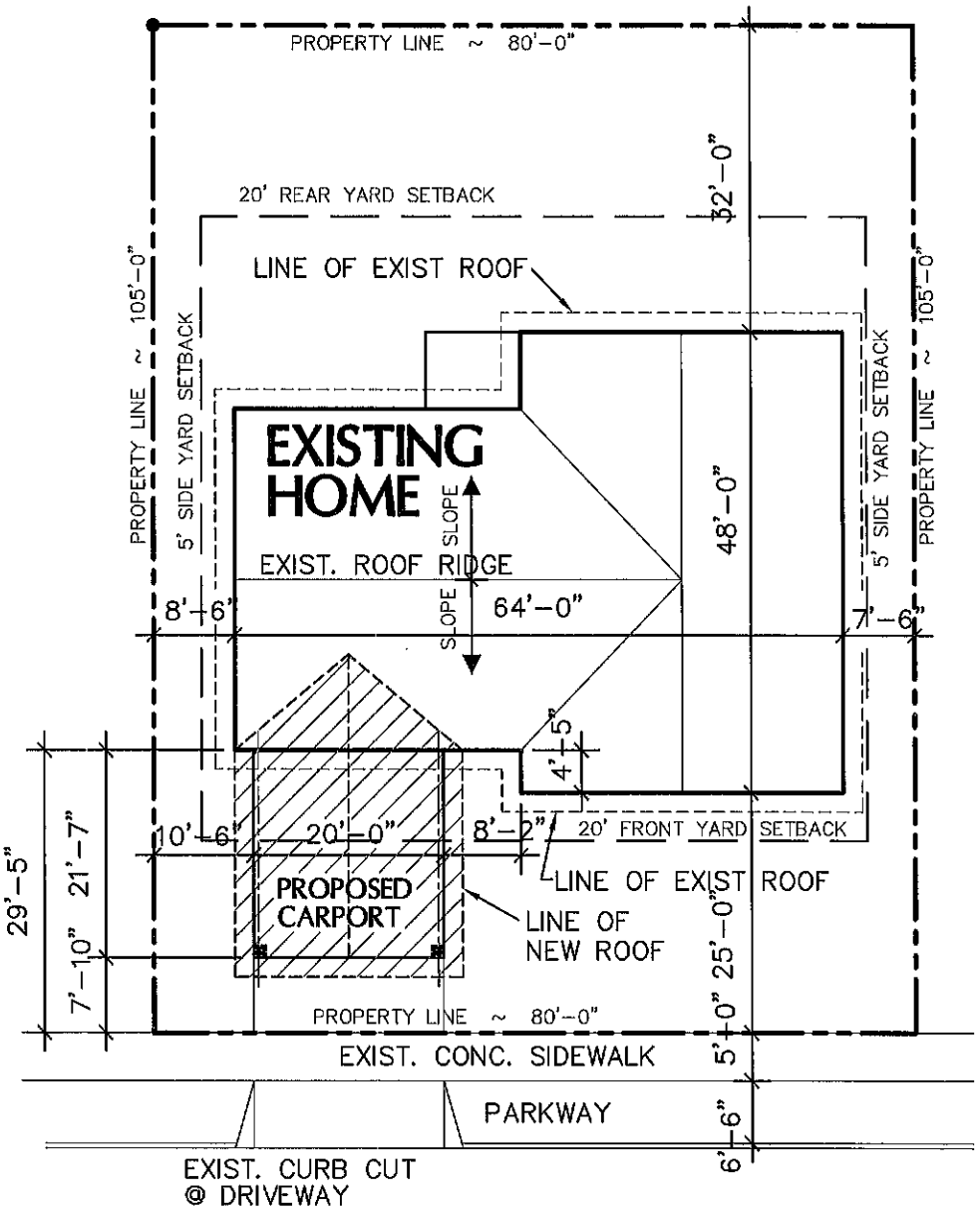

PLAN NORTH

MR. SINGLETON - 4729 LUCY

SCALE 1" =20'-0" EL PASO, TEXAS 79924 DATE: 10/11/10

PLOT PLAN DATA

1. LEGAL DESCRIPTION: 3 PLEASANT HILLS, LOT 5 // 4729 LUCY, EL PASO, TEXAS 79924
2. LOCATION OF STRUCTURES INCLUDING ADDITIONS: NONE PRIOR TO THIS CARPORT ADDITION
3. LOCATION OF ACCESSORY BUILDINGS: NONE
4. LOCATION OF STREETS W/ CURB CUTS AND DRIVEWAY SHOWN: SEE PLAN
5. SIZE AND NUMBER OF STRUCTURES AND NUMBER OF DWELLING UNITS:
   SEE PLAN FOR SIZES AND DWELLING UNITS IS - 1.
6. LOT LINES AND DIMENSIONS: SEE PLAN
7. REQUIRED YARDS AND SETBACKS: SEE PLAN
8. UTILITY RIGHT-OF-WAYS AND EASEMENTS: SEE PLAN
9. SCREENING WALLS OR FENCES, WHERE REQUIRED: NA
10. RETAINING WALLS, WHERE APPLICABLE: NA
11. PEDESTRIAN WAY AND SIDEWALKS: SEE PLAN

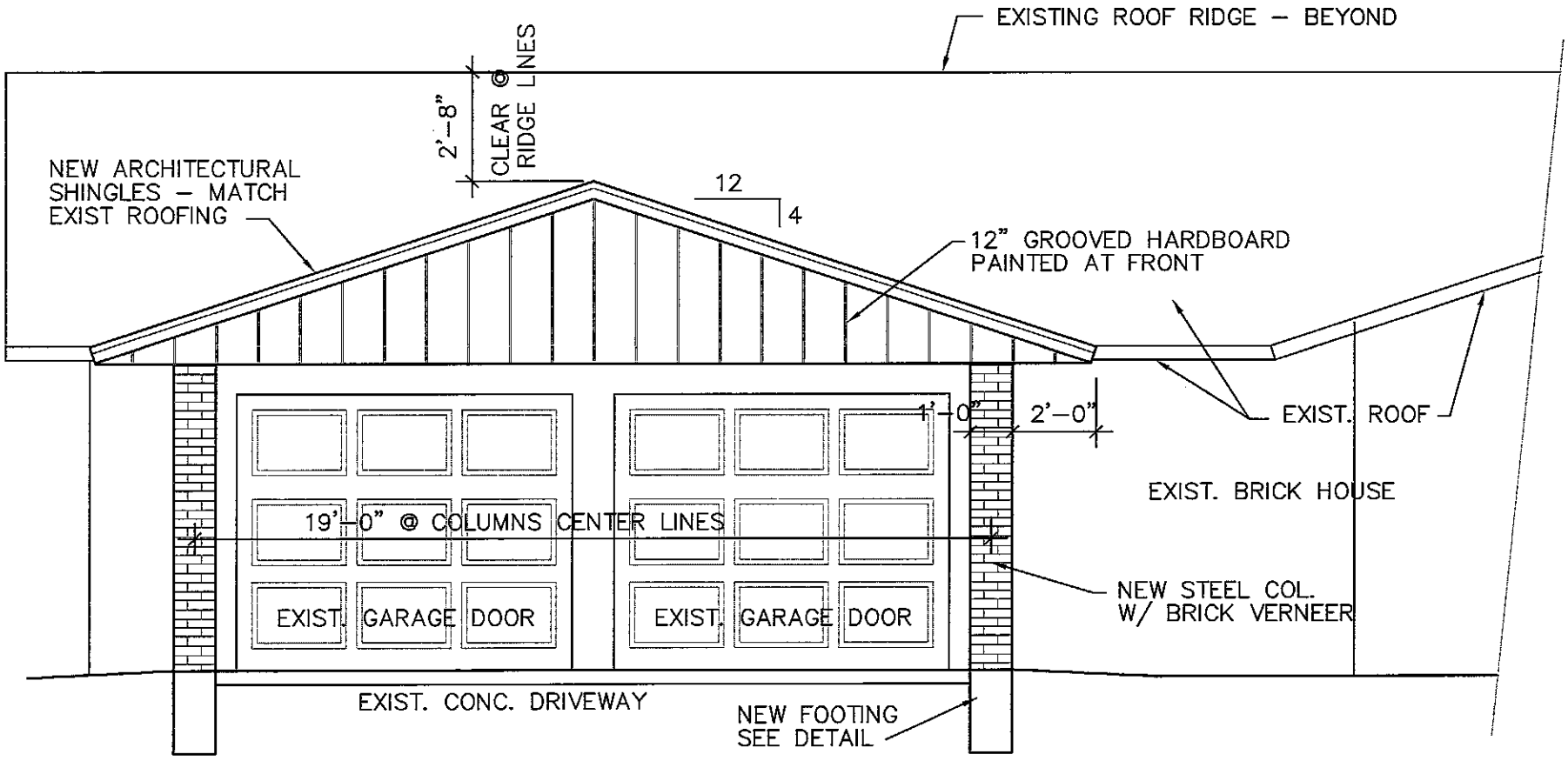

ELEVATION – FRONT

SCALE 1/4" =1'–0" 4729 LUCY DATE: 10/11/10

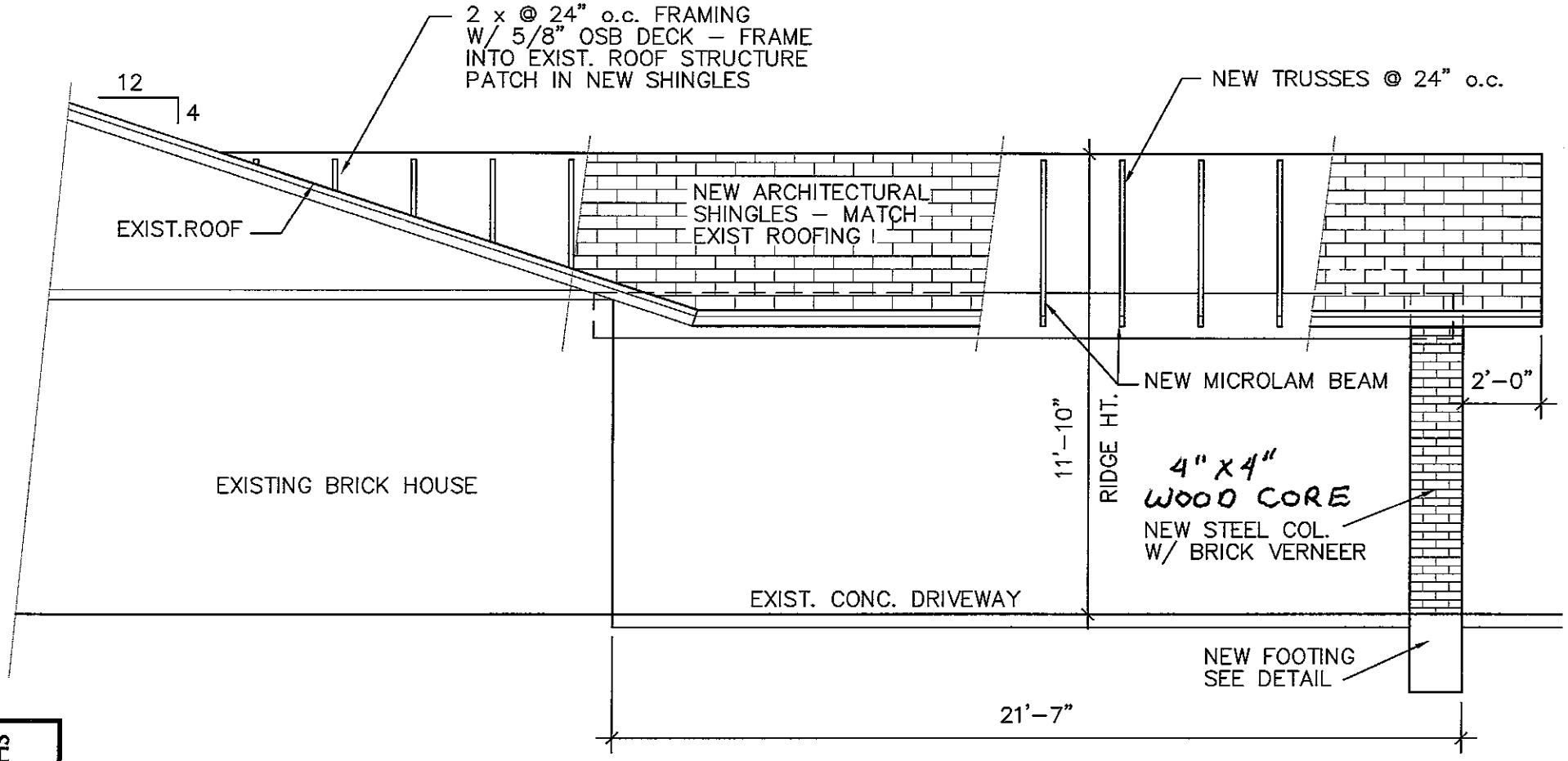

SHEET 3 of 4

ELEVATION

SCALE 1/4" =1'–0" 4729 LUCY DATE: 10/11/10

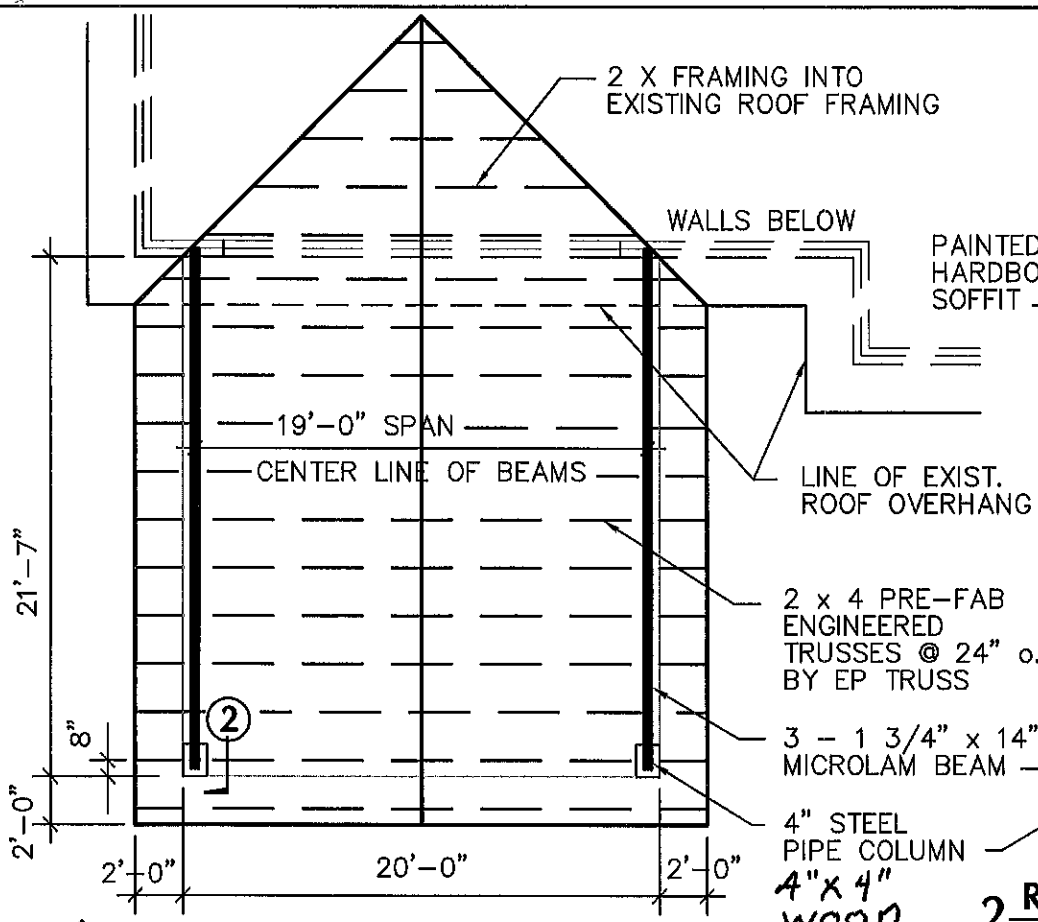

ROOF FRAMING PLAN

PLAN NORTH

SCALE 1/8" =1'-0" 4729 LUCY DATE: 10/11/10

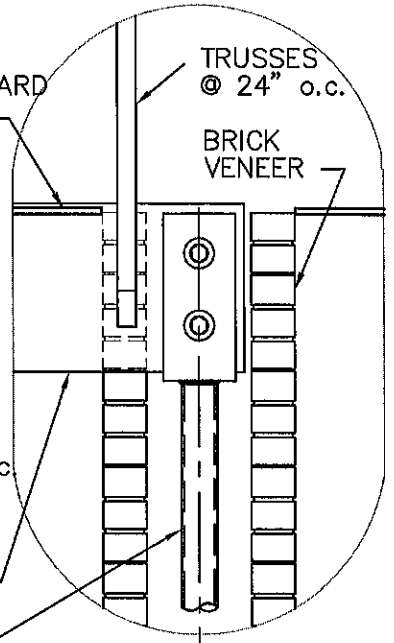

2 ROOF FRAMING DETAIL

SCALE :3/4" = 1'-0"

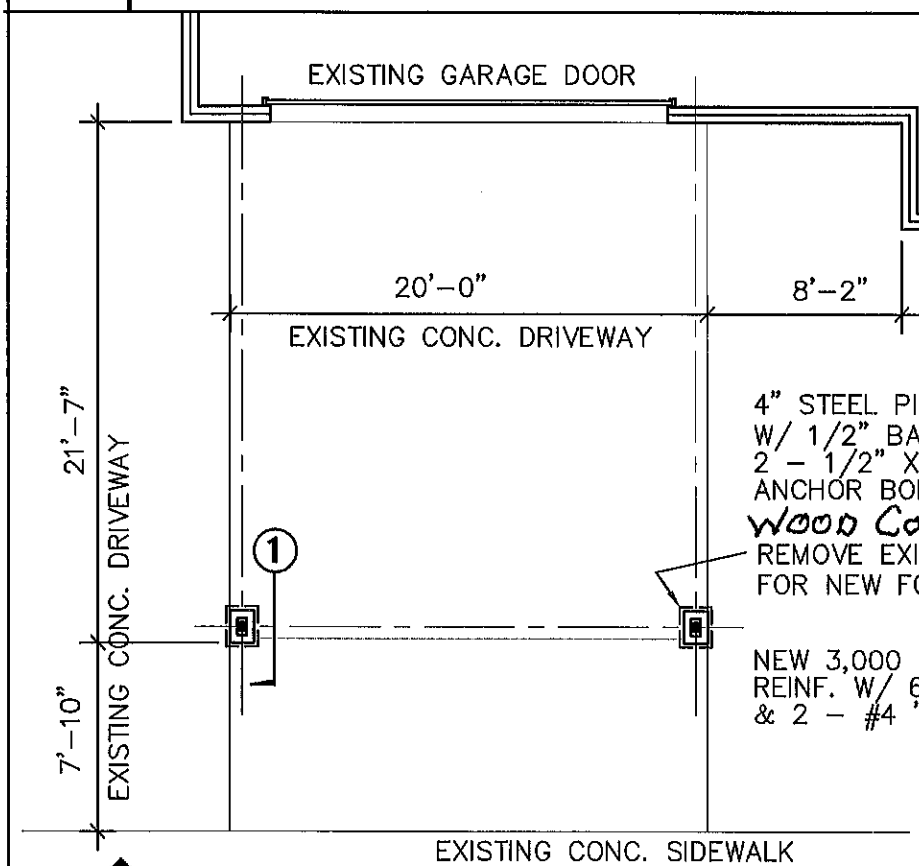

FOUNDATION PLAN

PLAN NORTH

SCALE 1/8" =1'-0" 4729 LUCY DATE: 10/11/10

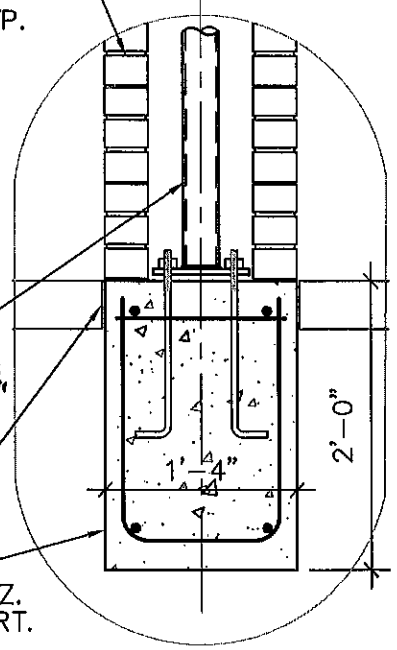

1 FOOTING DETAIL

SCALE :3/4" = 1'-0"

SHEET 2 of 4

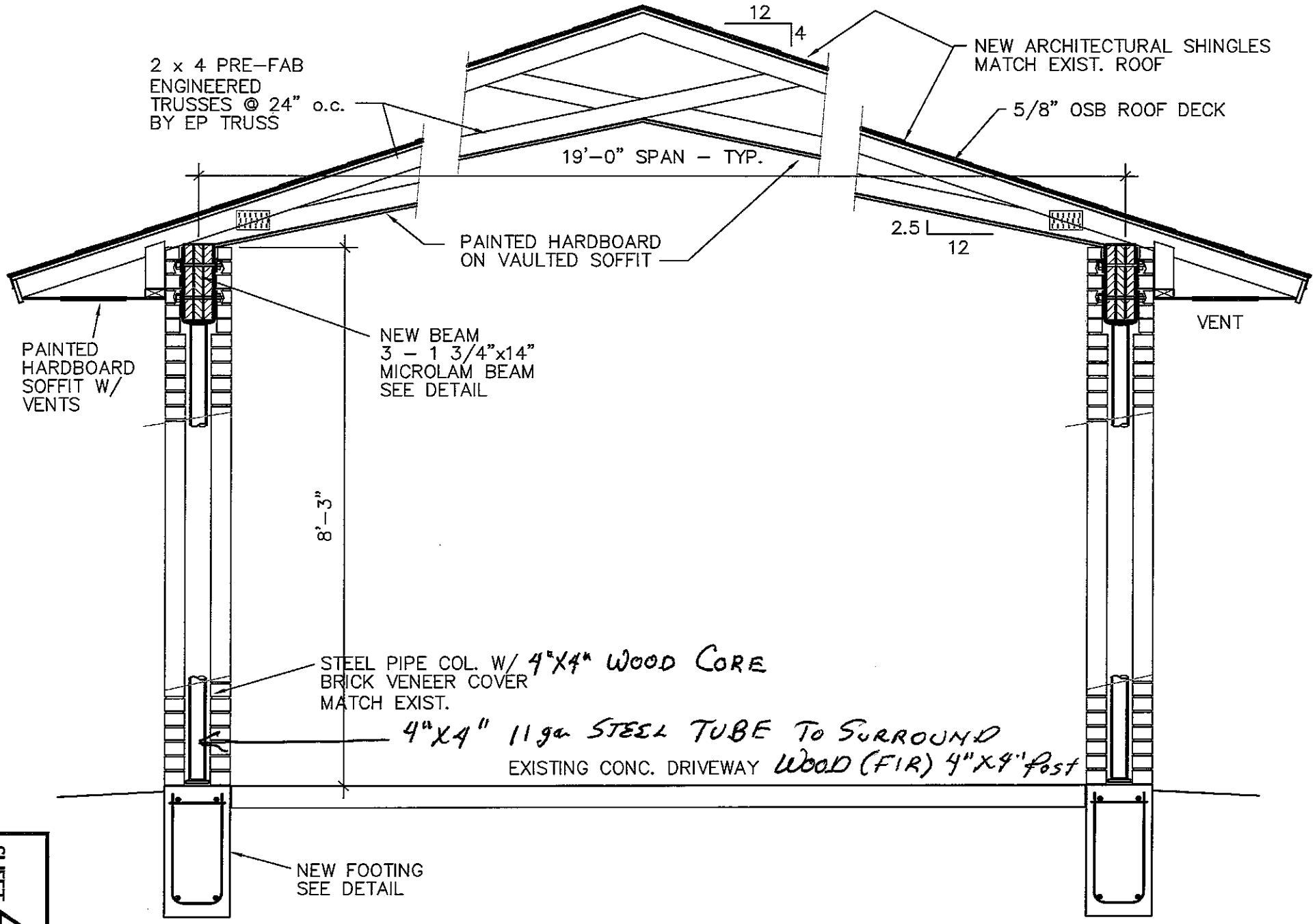

SECTION

SCALE 1/2" =1'-0" 4729 LUCY DATE: 10/11/10

SHEET 4 of 4

ZONING MAP

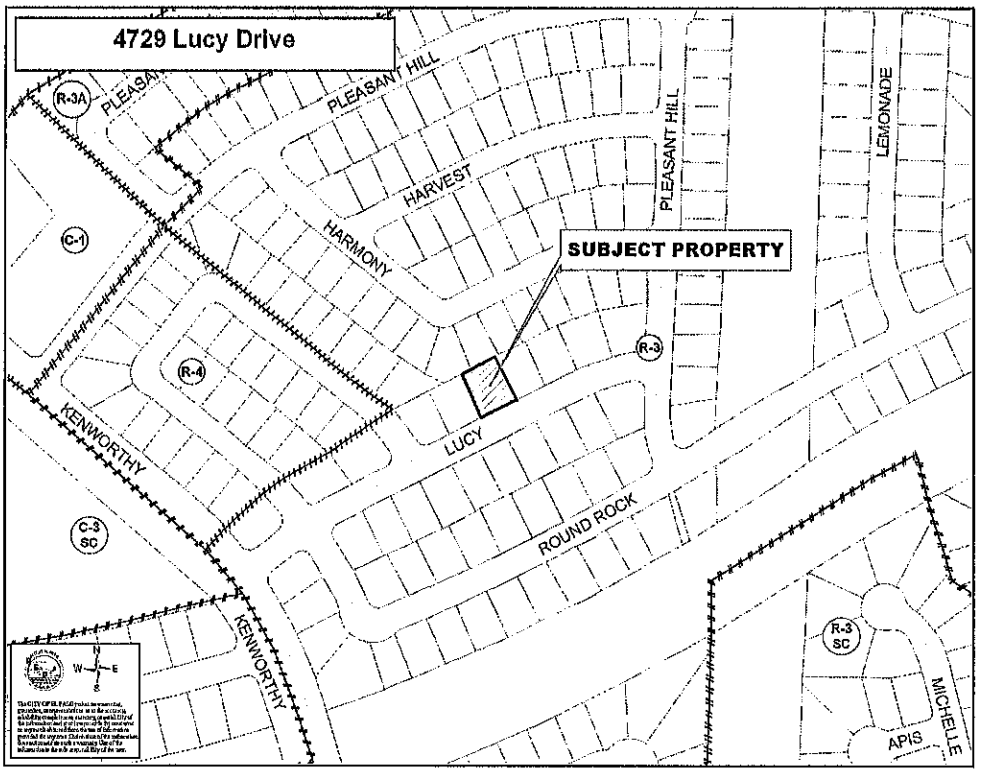
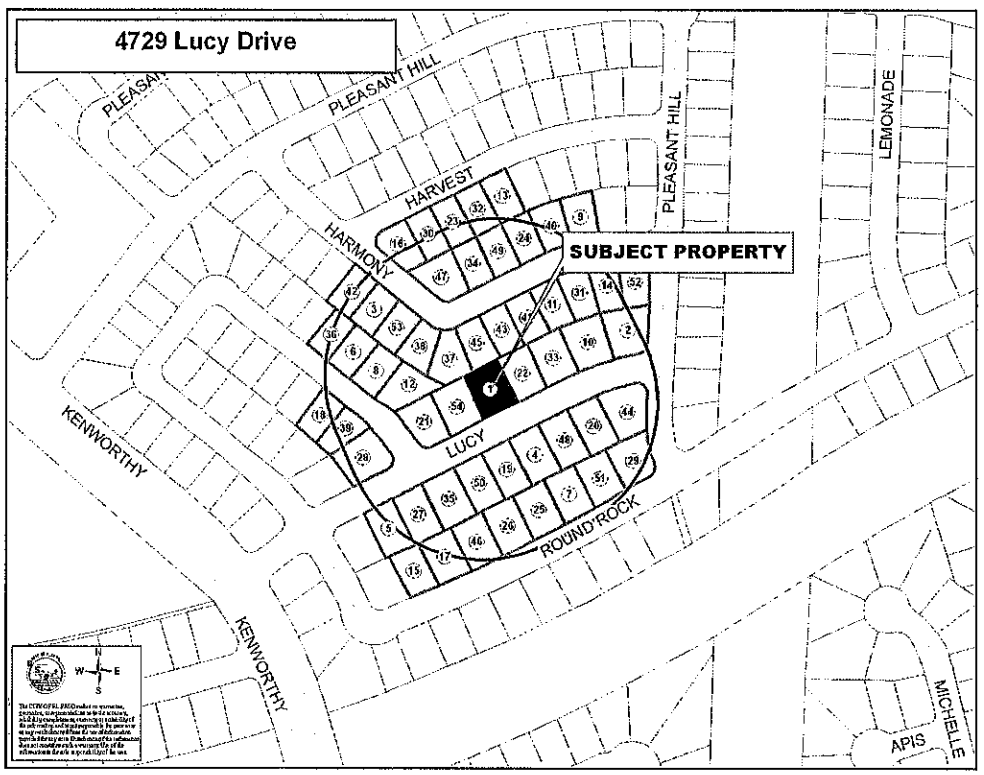
NOTIFICATION MAP