CITY OF EL PASO, TEXAS
AGENDA ITEM
DEPARTMENT HEAD'S SUMMARY FORM

DEPARTMENT: **Engineering**

AGENDA DATE: **May 11, 2010**

CONTACT PERSON NAME AND PHONE NUMBER: **R. Alan Shubert, P.E., City Engineer X4423**

DISTRICT(S) AFFECTED: **1 & 8**

SUBJECT:
That the City Manager be authorized to sign a license from the El Paso County Water Improvement District Number 1 to the City. The license number L-1189 is for use of the District's facilities by City for discharging and conveying groundwater produced during dewatering activities necessary for construction of pipeline, sewer lines, or other City facilities. The license is for 180 days and has a cost of $1,000 application fee, and $150 per acre-foot of groundwater for the first 1,000 acre feet and $45 per acre feet thereafter.

BACKGROUND / DISCUSSION:
City Council approved the construction award for Upper Valley Drainage Improvements Phase 4 (Lindberg and Equestre) March 2, 2010.

PRIOR COUNCIL ACTION:
City Council approved the construction award for Upper Valley Drainage Improvements Phase 4 (Lindberg and Equestre) March 2, 2010.

AMOUNT AND SOURCE OF FUNDING:
2006 Storm
508027-27264-14200500-PSTM06 PW26-0B

BOARD / COMMISSION ACTION:
N/A

**********REQUIRED AUTHORIZATION**********

DEPARTMENT HEAD: _____

(If Department Head Summary Form is initiated by Purchasing, client department should sign also)

Information copy to appropriate Deputy City Manager

RESOLUTION

BE IT RESOLVED BY THE CITY COUNCIL OF THE CITY OF EL PASO:

That the City Manager be authorized to sign a license from the El Paso County Water Improvement District Number 1 to the City. The license is number L-1189 and is for use of the District's facilities by City for discharging and conveying groundwater produced during dewatering activities necessary for construction of pipeline, sewer lines, or other City facilities. The license is for 180 days and has a cost of $1,000 application fee, and $150 per acre-foot of groundwater for the first 1,000 acre feet and $45 per acre feet thereafter.

ADOPTED THIS _____ DAY OF _____ 2010.

CITY OF EL PASO:

_____
John F. Cook, Mayor

ATTEST:

_____
Richarda Duffy Momsen,
City Clerk

APPROVED AS TO FORM:

Mark Shoesmith
Assistant City Attorney

APPROVED AS TO CONTENT

R. Alan Shubert, P.E.
City Engineer

56014 MSHO Reso EPCWID # 1 License

License – L1189 – Montoya Drainage Canal
LICENSE FOR USE OF DISTRICT FACILITIES FOR CONVEYANCE OF GROUNDWATER FROM CONSTRUCTION DEWATERING

TABLE OF CONTENTS

1. Definitions 3
2. Purpose of License 3
3. Approval of United States Environmental Protection Agency (EPA) and the Texas Commission for Environmental Quality (TCEQ), U.S. Army Corps of Engineers (USACE) 4
4. Licensee's Structures and Facilities 4
5. Water Quality of Groundwater Discharged into District's Facilities 4
6. Fee for Reporting to Licensee Incorrect Monthly Volume or TDS Levels 5
7. Volumetric Measurement of Groundwater 5
8. Construction by the Licensee with District Facilities 5
9. Licensee's Failure to Comply with Terms of this License 6
10. Payment by Licensee to District 6
11. Map and Estimated Volume of Groundwater Production 7
12. Stormwater, Effluent, Waste, and Pollution 7
13. Term and Termination 7
14. Rules, Laws, and Regulations 7
15. District Design and Survey Standards 8
16. Cultural Values 8
17. Concealed Conditions or Obstacles 8
18. Interference Prohibited 8
19. Use Limitations and No Rights to Water 8
20. Ingress and Egress on District's Facilities 8
21. Insurance 9
22. Indemnification and Hold Harmless 9
23. No Liability for Damage to Licensee's Facilities 9
24. Licensee Shall Maintain Licensee's Facilities 9

1 25. Damage to District's Facilities 10
2 26. No Warranty of Title 10
3 27. Remedies for Default 10
4 28. Use of Facilities 11
5 29. Notices 11
6 30. Entire Agreement 11
7 31. Assignment of License 12
8 32. Texas Law to Apply 12
9 33. Severability 12
10 34. Rights and Remedies Cumulative 12
11 35. Attorney's Fees 12
12 36. Titles 12
13 37. Application to Use District Real Property 13

14 **Exhibits**

15 A – Estimate of Amount of Groundwater to be Discharged
16 B – Map of Location of Discharge Structure
17 C – Copy of Insurance Certificate Naming District as Insured

EL PASO COUNTY WATER IMPROVEMENT DISTRICT NO. 1

LICENSE FOR USE OF DISTRICT FACILITIES FOR CONVEYANCE OF GROUNDWATER FROM CONSTRUCTION DEWATERING

CITY OF EL PASO – MONTOYA DRAINAGE CANAL

THIS LICENSE is made between the EL PASO COUNTY WATER IMPROVEMENT DISTRICT NO. 1, a political subdivision of the State of Texas organized and existing pursuant to Article XVI, Section 59 of the Texas Constitution ("District") and the City of El Paso, a home-rule municipal corporation ("Licensee"), hereinafter collectively called the "parties".

WHEREAS the District owns, operates and maintains a series of irrigation canals, lateral canals, and drainage canals in El Paso County, Texas, that constitute part of the Rio Grande Reclamation Project; and

WHEREAS Licensee, at its sole cost and expense, desires to construct, operate and maintain installations that will enable it to discharge and convey groundwater into one or more of the District's drainage canals or other facilities, and to obtain the District's permission for such discharge and to convey such groundwater through the District's drainage canal or other facilities.

NOW, THEREFORE, the parties agree as follows:

1. Definitions

Groundwater: As used in this License, the term "groundwater" means all waters that enter any of the drainage canal or other facilities operated and maintained by the District

District's Facilities: as used in this License, the term "District's Facilities" mean the drainage canals, irrigation canals, lateral canals, roads, right-of-ways, easements, or other land or facilities owned or controlled by the District

2. Purpose of License

This License is for the limited use of the District's Facilities by the Licensee for the purposes of discharging and conveying groundwater produced during non-agricultural dewatering activities necessary for construction of pipeline, sewer lines, buildings, or other facilities not owned by the District.

3. Approval of United States Environmental Protection Agency (EPA) and the Texas Commission for Environmental Quality (TCEQ), U.S. Army Corps of Engineers (USACE)

The Licensee shall at all times when groundwater is being discharged into the District's Facilities pursuant to this License have all permits and necessary permissions, authorizations, or licenses required by the EPA, TCEQ, USACE, or others. A copy of all correspondence between the Licensee and the EPA, TCEQ, USACE or any other entity or governmental agency regarding the construction activities associated with the groundwater produced by dewater, the groundwater being discharged into the District's Facilities, and any pollution, contamination, waste, or any impairment to water, air, or soil quality shall be provided to the District in writing immediately (by hand delivery or facsimile and then followed by a notice as provide herein) upon the Licensee receiving such information.

4. Licensee's Structures and Facilities

Any structures and facilities now existing or hereafter to be erected by Licensee in furtherance of the purposes of this License shall be erected so as never to obstruct in any manner the flow of water in or into the canals, laterals and drain ditches operated and maintained by the District, and so as not to interfere in any manner whatsoever with the construction, operation, or maintenance of any part of the Rio Grande Reclamation Project or the District's Facilities. All construction or facility modification plans shall be submitted to the District 30 calendar days in advance of any construction and must receive written approval by the District prior to the commencement of any construction.

5. Water Quality of Groundwater Discharged into District's Facilities

a. The quality of the groundwaters being discharged into the District Facilities, shall, at Licensee's expense, be tested monthly for total dissolved solids (TDS), which shall in no event exceed 2000 PPM, with the analysis being conducted according to the latest methodologies approved by the United States Environmental Protection Agency and reported by a certified laboratory satisfactory to the District. Prior to any discharge an initial TDS level report is required. The results of monthly water quality analyses and discharge volumes shall be reported by the 15th of each month following the month for which the data was collected in writing to the District.

b. In addition to the tests required by above, the District may, at any time, conduct such additional water quality tests as the District may desire; provided that in order for the District to exercise any of the rights afforded it by this License, such tests shall be

performed according to reasonable technical standards. The fact that such test is conducted according to standards specified in the latest edition of AWWA Standard Methods or other methodologies approved by the United States Environmental Protection Agency or its successor shall be conclusive proof that such test was performed according to reasonable technical standards. Regardless of the number of tests conducted pursuant of this License during any month, the test revealing the highest level of TDS during the month shall be controlling for all purposes under this License. If no such test is conducted during any month in which any groundwaters are discharged into the drain ditches operated and maintained by the District, it shall be conclusively presumed for all purposes under this License, if a test had been conducted, it would have revealed TDS levels greater than 2000 PPM.

6. Fee for Reporting to Licensee Incorrect Monthly Volume or TDS Levels

If the District determined that the Licensee has reported to the District a smaller quantity of groundwater than was actually diverted into the District's Facilities by Licensee, then the Licensee shall pay the District an amount equal $200 per acre-foot for each acre-foot of water diverted into the District's Facilities for the month in which such report occurred.

7. Volumetric Measurement of Groundwater

The volume of groundwaters discharged into the drain ditches shall be recorded by the Licensee on a daily basis using an impeller flow meter with an accuracy of ±5% of the daily flow volume. By the 7th day of each month, the Licensee shall provide the District with the recorded daily flow volume and monthly total for the previous. If the Licensee does not provided the District with such information by the 15th day of each month, the District shall make a determination of the quantity of groundwaters discharged by the Licensee into the District Facilities during such month and such determination shall be binding on Licensee.

8. Construction by the Licensee with District Facilities

Construction by the Licensee shall be accomplished at such time or times, and in such a manner as will not interfere with the use or maintenance of the District's facilities, as determined by the General Manager of the District or his authorized representative. Licensee shall notify the General Manager of the District or his authorized representative of any such proposed construction at least 30 calendar days prior to commencement of construction. Construction and maintenance work performed by Licensee under this

License shall not interfere in any manner whatsoever with the construction, operation, or maintenance of any part of the District's activities.

9. Licensee's Failure to Comply with Terms of this License

a. If Licensee fails to comply with any terms of this License within ten (10) days after receipt of written notice to comply with such terms (or within such shorter time as the District may direct in cases the District deems to be an emergency), Licensee agrees, within forty-five (45) days of receipt of billing, to pay for the cost of maintenance or other actions undertaken by the District should the District deem it necessary or advisable to complete maintenance or take any other action that is Licensee's responsibility pursuant to this License. It is expressly understood that the District's prerogatives under this License are in addition to any other remedies that the District may have in law or equity or pursuant to another provision of this License and that the District's decision to perform some responsibility of Licensee shall not constitute an election of remedies or a waiver of any or all additional remedies to which the District may be entitled.

b. Licensee agrees that in the case of its failure to satisfy all requirements under this License, it shall, within forty-five (45) days after written notification from the General Manager of the District or his authorized representative, at its costs, remove all structures constructed under this License and return the District's facilities, including the canals, laterals or drain ditches, to as near their original condition prior to the execution of this License as circumstances then existing permit, normal wear and tear excepted. If Licensee does not remove all of its structures and facilities or does not return the District's facilities, including the canals, laterals, or drain ditches, to as near their original condition prior to the execution of this License as circumstances then existing permit, within forty-five (45) days after written notification to do so, the District shall be authorized to perform such work. If the District elects this option, Licensee agrees, within fifteen (15) days of receipt of billing, to pay for the cost of such removal and for all other costs reasonably incurred by the District as a result of Licensee's breach, and the District may retain possession of such structures (and any other property of Licensee then in the District's possession) until the District's bill is paid in full.

10. Payment by Licensee to District

In addition to the non-refundable application fee of $1,000, the Licensee shall pay to the District a minimum of seven (7) calendar days in advance of any discharge under this License a fee for the use of the District's Facilities equal to $150 per acre-foot of groundwater for the first 1,000 acre feet of groundwater discharged and $45 per acre feet

thereafter as estimated by the License that will be discharged into the District's Facilities during term of the agreement.

11. Map and Estimated Volume of Groundwater Production

Prior to execution of this License, Licensee shall furnish to the District a map of sufficient detail as determined by the District (attached as Exhibit A) showing the location of the proposed discharge sites and specifications describing the design capacity and number of pumps to be used. Licensee shall provide the District prior to executing this agreement an estimated of the volume of groundwater to be discharged under this License (attached as Exhibit B). Such estimate of the volume of groundwater shall be approved in writing by the District's Engineer prior to this agreement being executed.

12. Stormwater, Effluent, Waste, and Pollution

Licensee shall not divert storm water, effluent, waste, or any other water or other substance into any of the District's facilities at any time, nor shall Licensee discharge any waste or conduct any activity that causes, continues to cause or will cause pollution of any water of the state in violation of Chapter 26 of the Texas Water Code or any other applicable state or federal law. Licensee shall defend and hold harmless the District, its Board of Directors, General Manager, employees, engineers, consultants, insurers, and agents from any claims, fees, fines or penalties arising out of breach of any condition of this License.

13. Term and Termination

This License shall terminate at midnight 180 days after the date of this License is executed on behalf of the District. The District reserves the right to terminate this License immediately if at any time, in the opinion of the General Manager of the District, Licensee's use of the District's facilities has adversely affected, or may adversely affect, the District. The District reserves the right to terminate this License at any time if it deems Licensee to be in breach of any of the provisions hereof.

14. Rules, Laws, and Regulations

Licensee represents, warrants and agrees that it will conduct its activities on the Properties in compliance with all applicable State and Federal environmental laws, rules and regulations, and shall comply with all municipal, county, state and Federal laws, rules, and regulations applicable to its construction and operations under this License.

15. District Design and Survey Standards

All facilities constructed by the Licensee pursuant to this License shall meet the District's current Design and Survey Standards as contained in the District's License Manual.

16. Cultural Values

Should evidence of historical, archeological, or paleontological sites be discovered in the course of construction or use of the interests subject to this License, the Licensee shall immediately suspend construction or operations and advise the District. Licensee acknowledges the existence of an agreement between the District and the State of Texas and/or the State Historical Conservation Officer for the State of Texas and accepts this License subject to all provisions of such agreement.

17. Concealed Conditions or Obstacles

Licensee accepts the interests subject to the License in their existing condition. The District shall not be responsible for concealed conditions, defects or obstacles encountered by Licensee, and the District makes no warranties or representations related to the sub-surface conditions which may be encountered by Licensee.

18. Interference Prohibited

Notwithstanding anything to the contrary herein, Licensee's activities shall, at all times, be conducted so as not to interfere with the operation, maintenance, or administration by the District of its water improvement District or its facilities. Any repairs, maintenance or expense to the District as a result of Licensee's activities after notice and failure of Licensee to respond promptly shall be reimbursed to the District by the Licensee.

19. Use Limitations and No Rights to Water

Use of the interests subject to this License by Licensee is limited to the purposes and premises herein specified, does not grant the Licensee to any rights to water or any right to use the groundwater discharged by the Licensee into the District's Facilities.

20. Ingress and Egress on District's Facilities

During the term of this License allows Licensee to ingress or egress to the portion of the District's Facilities as shown on the map in Appendix A attached and made a part of this License.

21. Insurance

Unless the licensee is a government entity, as determined by the District, the Licensee shall at all times during the term of this License, maintain in force, at the Licensee's expense, a commercial general liability insurance policy adequate to protect District against liability for damage claims through use of or arising out of accidents occurring in and around the Easement, in minimum coverage amounts acceptable to District. Such insurance policy shall name District as an additional insured and contain a provision or endorsement that the coverage afforded will not be canceled, materially changed or renewal refused until at least 30 days' prior written notice has been given to District. Licensee shall provide to District, at the time this License is presented for approval by District's governing body, a certificate evidencing such insurance coverage. Licensee shall ensure that District is furnished evidence, satisfactory to District, of continuation of such insurance each year during the term of this License. Licensee agrees that the policy limits of any policy or policies provided under this paragraph will first be used to satisfy any claim or judgment against District. Licensee further agrees to waive any rights it has under any such policy or policies for indemnification until such judgment or claim is paid on behalf of District.

22. Indemnification and Hold Harmless

To the maximum extent allowable by law, the Licensee agrees to indemnify and hold the District and its officers, directors, the District General Manager, the District Engineer, and the District's employees, agents, attorneys, and consultants harmless from any claims of every nature, including without limitation all claims for damages from personal injury, property damage, and environmental damage pursuant to this License.

23. No Liability for Damage to Licensee's Facilities

The District shall have no liability to the Licensee for any damage to the Licensee caused by the operation, maintenance, improvement, relocation, or removal of Licensee's facilities located on the District's Facilities. Licensee will save the District and its officers, directors, the District's General Manager, the District's Engineer, and the District's employees, agents, attorneys, and consultants harmless from any claim, damage, or demand by any third party resulting from such damage to Licensee's facilities.

24. Licensee Shall Maintain Licensee's Facilities

The Licensee shall be responsible for any and all maintenance associated with any installation by Licensee. Such maintenance shall include, but not be limited to: (a) repair

and upkeep of the installation; (b) the removal of deposited sediment, trash, and other debris from within and adjacent to the structure(s); (c) control of vectors and other pests associated with the structure(s); and (d) repair of damages to the affected facilities of the District as determined by the District's General Manager or the District's Engineer. Such maintenance shall be conducted by the Licensee as needed or upon request by the District. Such maintenance shall not interfere in any manner whatsoever with the construction, operation, maintenance of any part of the District's facilities or the Rio Grande Reclamation Project. Any violation by Licensee of its obligation to maintain as set forth in the section shall constitute a default in this License by Licensee and shall entitle the District to evoke any and all remedies provided in the License for default.

25. Damage to District's Facilities

In addition to all other remedies provided hereunder to the District, Licensee specially covenants to repair or reimburse the District for the costs of repairing and any other damages to the District's Facilities that may result directly or indirectly from Licensee's maintenance, operation, and or use of Licensee's facilities, whether or not such repairs and damages are caused by negligence, third party act, omission, or Act of God.

26. No Warranty of Title

The District makes no warranty of title or legal authority to make this License. The District expressly disclaims any warranty of title of the interests subject to this License. Licensee acknowledges that this License is subject to all easements, licenses, and other permitted and unknown uses of any nature, which exist on the date of the License.

27. Remedies for Default

In the event of any default by Licensee in the performance of any terms or conditions hereof which continues seven (7) calendar days after notice from District of such default, the District may accelerate all remaining unpaid payments provided herein and demand immediate payment thereof, terminate this License without further notice, and/or invoke any other remedy provided by law or equity including without limitation injunctive relief and damages without refund of any consideration or any part thereof previously paid to the District by Licensee. Also, in the event of any default, and in addition to any other remedy the District may have, the District should be entitled to recover from Licensee interest on all amounts due, accrued at a rate of 10% per year, reasonable attorney's fees and court cost.

28. Use of Facilities

The District retains, reserves, and shall continue to enjoy the use of its surface, sub-surface and aerial portions of the District's Facilities for any and all purposes.

29. Notices

All notices, requests, demands, and other communications shall be in writing and shall be deemed given if personally delivered or mailed, certified mail, return receipt requested, or sent by overnight carrier to the following addresses:

If to Licensee, to:

The City of El Paso
2 Civic Center Plaza, 4th Floor of City Hall
El Paso, Texas 79901
Phone (915) 541-4200
Fax (915) 541-4441

If to District, to:

General Manager
El Paso County Water Improvement District No. 1
P.O. Box 749
13247 Alameda Avenue
Clint, Texas 79836-0749
Phone (915) 872-4000
Fax: (915) 851-0816

Any notice given in accordance with this paragraph shall be deemed received upon receipt if by personal delivery, two (2) days after deposit in the U.S. mail. District and Licensee shall promptly notify other party of any changes in address, telephone number or facsimile number.

30. Entire Agreement

This License contains the entire agreement between the parties relating to its subject matter. Any oral representation and previous negotiations concerning this License are

merged herein. Any subsequent amendment or modification must be in writing and agreed to by both Parties.

31. Assignment of License

This License is not assignable.

32. Texas Law to Apply

This License is to be construed under Texas Law, and all obligations of the parties created by this License are performable in El Paso County, Texas. Any suit brought hereon by either party shall be filed in El Paso County, Texas, in a court of competent jurisdiction.

33. Severability

If any one or more of the provisions contained in this License are for any reason held to be invalid, illegal, or unenforceable in any respect, the invalidity, illegality, or unenforceability will not affect any other provision of the License, which will be construed as if it had not included the invalid, illegal or unenforceable provision, provided such provision or provisions are not essential to the substance of this License, in which latter case this License shall be deemed null and void, and there shall be no refund of any consideration paid by Licensee to the District hereunder.

34. Rights and Remedies Cumulative

The rights and remedies provided by this License are cumulative, and either party's using any right or remedy will not preclude or waive its right to use any other remedy. The rights and remedies are given in addition to any other rights the parties may have by law, statute, ordinance, or otherwise.

35. Attorney's Fees

If, as a result of either part's breaching this License, the other party employs an attorney or attorneys to enforce its rights under this License, then the party adjudged to be in default will pay the other party the reasonable Attorney's fees and other associated costs incurred to enforce the License.

36. Titles

The titles of the Articles, Paragraphs, and Sections of this License are intended for the convenience of the parties and shall have no effect and shall neither limit nor amplify the provision of the License itself.

37. Application to Use District Real Property

This License is granted, in part, based in the reliance on the information supplied and the interpretation made by the Licensee to the District in the Licensee's "Application to Use District Property" and that such information was true and correct. Should any part of such information be determined by the District to be incorrect or wrong, this License may be re-evaluated by the District. If this License, based on the correct information, is found by the District to be detrimental to the District interests, then the licensee may be determined by the District to be in default and invoke the provisions of Section 9 of this License.

IN WITNESS WHEREOF, the parties have executed this License in duplicate counterparts, each of which has the full force and effect of an original. This License is effective on the date written below on the signature line for the District:

El Paso County Water Improvement District No. 1

By: _____ Date: _____

JOHNNY STUBBS
President, Board of Directors

Licensee: The City of El Paso

By: _____ Date: _____

Printed Name: _____ Title: _____

WITNESS THE FOLLOWING SIGNATURES:

LICENSEE: CITY OF EL PASO:

_____
Joyce Wilson, City Manager

Date: _____

APROVED AS TO FORM:

Mark Shoesmith
Assistant City Attorney

APPROVED AS TO CONTENT:

R. Alan Shubert, P.E.
City Engineer

55949

El Paso County Water Improvement District No. 1
Minimum Information Required to Estimate Dewatering Quantities

Application No. 1189

Name of Estimator: JAR Concrete

Approximate Location: LINDBERGH AVE. @ MONTOYA DRAW

Depth of Open Trench (ft): 8' Deep To 13' Deep

Days Trench will be open (ft): 300' LF To 400' LF

Pipe Diameter Being Installed (inches): 24" RCP 8" [redacted] WATER LINE 12" SEWER LINE 60" RCP

Length of Trench (ft): 3619 LF

Avg. Depth to Groundwater (ft): 8

Max. No. of Wells Operation at any time: 21 * SEE ATTACHMENT

Average Flow Rate of Pumps (gpm): 240

Estimated No. of Days to Lower Groundwater: 10

Estimated No. of Days Pumps will be Operational: 120 * SEE ATTACHMENT

Estimate of Total Amount of Groundwater Produced (a.f.): 1,818 * SEE ATTACHMENT

Estimated Dewatering Fee ($): 186,810.00

Geotechnical Boring Information: (attach logs and or report)

Special Project Considerations (concrete placement issue, foundation work, subsurface structures placement, etc.):

* ATTACHMENT: ESTIMATED QUANTITIES SCHEDULE

RECEIVED
APR 21 2010
EPCWID # 1

EXHIBIT "A"

A1189

Upper Valley Drainage Imp Ph IV: Estimated Discharge Flow Montoya Lateral

3 Pumps x 240 GPM x 60 min x 24 hrs = 1,036,800 GPD

1,036,800 GPD / 325,000 per acre foot conversion = 3.19 acre feet per day

3.19 acre feet x 30 days = 95.70 total acre feet

Upper Valley Drainage Imp Ph IV: Estimated Discharge Flow Montoya Drain

6 Pumps x 240 GPM x 60 min x 24 hrs = 2,073,600 GPD

2,073,600 GPD / 325,000 per acre foot conversion = 6.38 acre feet per day

6.38 acre feet x 60 days = 382.80 total acre feet

Upper Valley Drainage Imp Ph IV: Estimated Discharge Flow Montoya Main Lateral

RECEIVED
APR 21 2010
EPCWID # 1

A1189

2 Pumps x 240 GPM x 60 min x 24 hrs = 691,200 GPD

691,200 GPD / 325,000 per acre foot conversion = 2.13 acre feet per day

2.13 acre feet x 30 days = 63.90 total acre feet

Lindberg Ave Total Acre Feet = 542.40 4 months

Upper Valley Drainage Imp Ph IV: Estimated Discharge Flow Equestre Drive

10 Pumps x 240 GPM x 60 min x 24 hrs = 3,456,000 GPD

3,456,000 GPD / 325,000 per acre foot conversion = 10.63 acre feet per day

10.63 acre feet x 120 days = 1,275.60 total acre feet

Equestre Dr Total Acre Feet = 1,275.60 4 months

RECEIVED
APR 21 2010
EPCWID # 1

A1189

Total Job = 1,818.00 3 months

A1189

RECEIVED
APR 21 2010
EPCWID # 1

EXHIBIT "B"

RECEIVED
APR 21 2010
EPCWID # 1

A1189

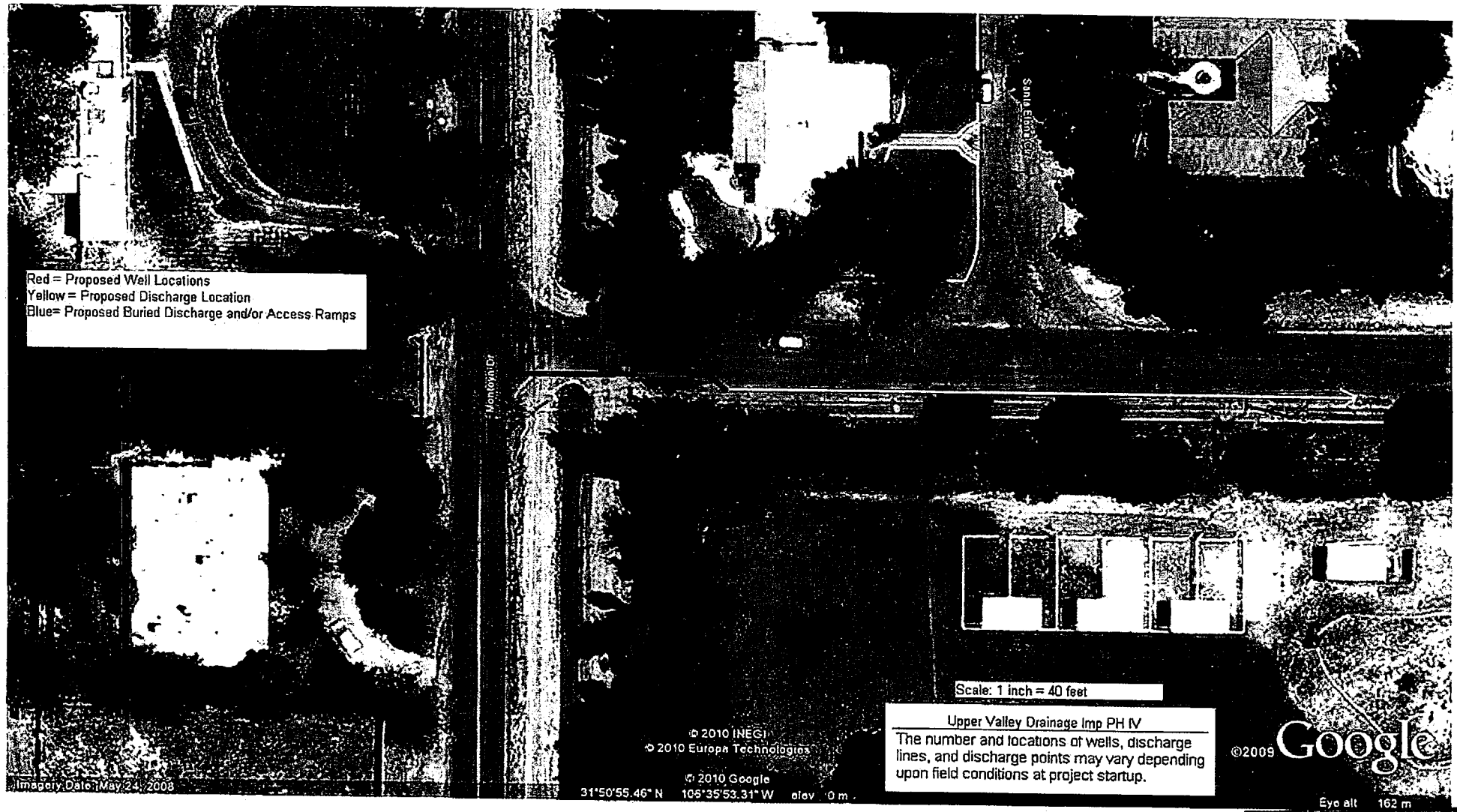

Upper Valley Drainage Imp PH IV

The number and locations of wells, discharge lines, and discharge points may vary depending upon field conditions at project startup.

RECEIVED
APR 21 2010
EPCWID # 1

A1189

RECEIVED
APR 21 2010
EPCWID # 1

A1189

RECEIVED
APR 21 2010
EPCWID # 1

A1189

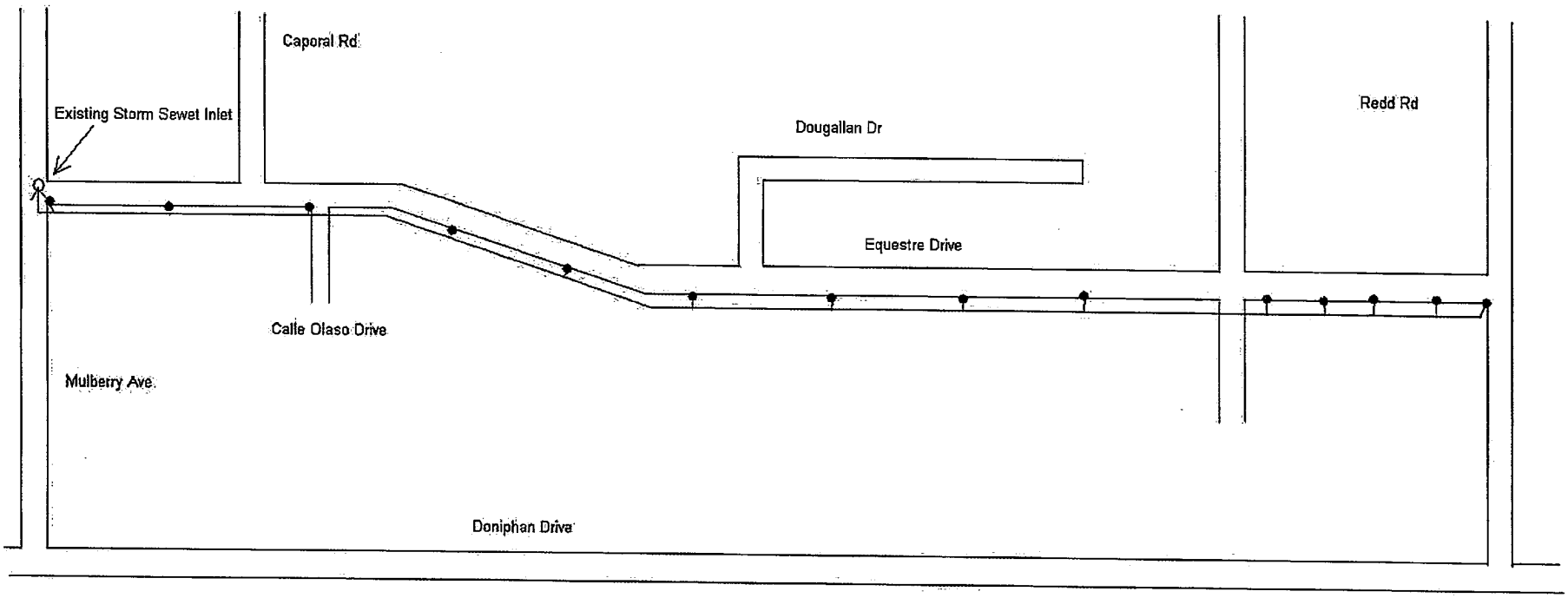

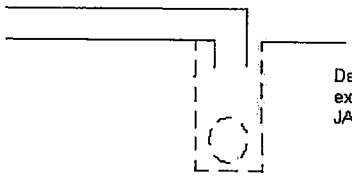

Dewatering Water will be discharged into existing storm sewer inlet as directed by JAR.

Upper Valley Drainage Imp PH IV

The number and locations of wells, discharge lines, and discharge points may vary depending upon field conditions at project startup.

RECEIVED
APR 21 2010
EPCWID # 1

A1189

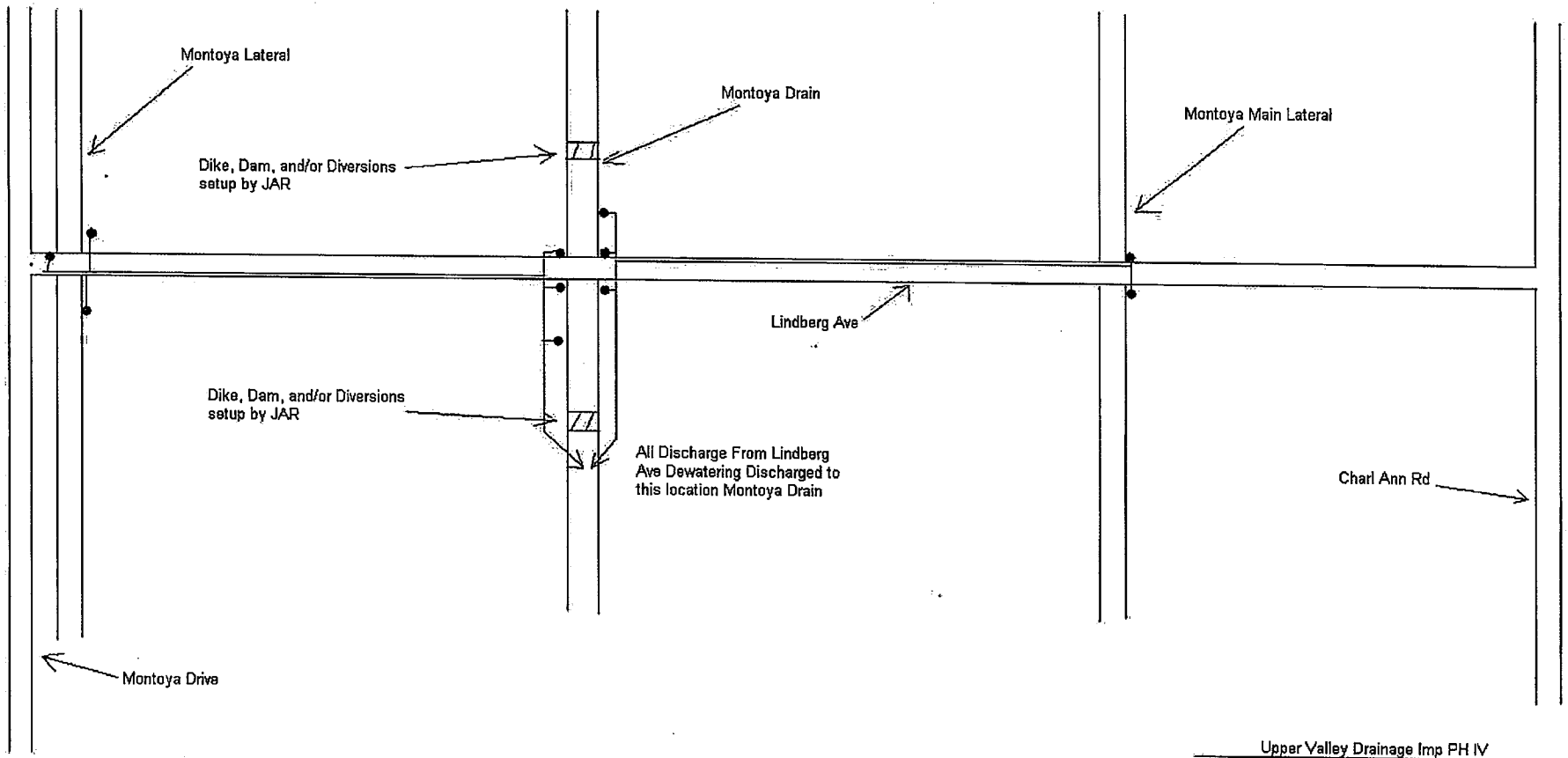

Upper Valley Drainage Imp PH IV

The number and locations of wells, discharge lines, and discharge points may vary depending upon field conditions at project startup.

RECEIVED
APR 21 2010
EPCWID # 1

A1189

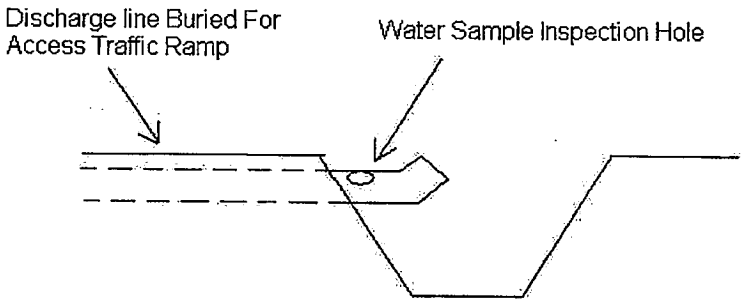

Montoya Drain

Typical Discharge Area - Lindberg Ave

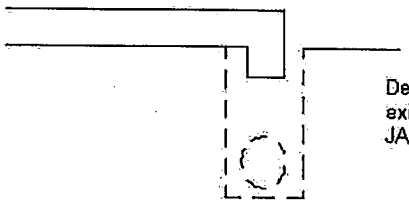

Dewatering Water will be discharged into existing storm sewer inlet as directed by JAR.

Typical Discharge Area - Equestre Dr

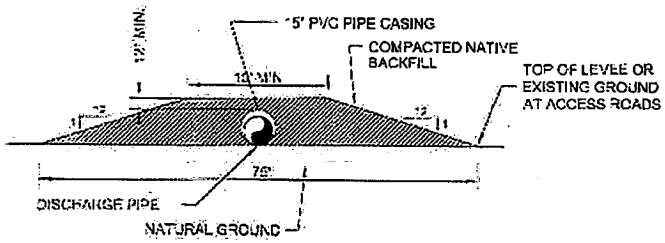

Levee Ramp Detail

NTS

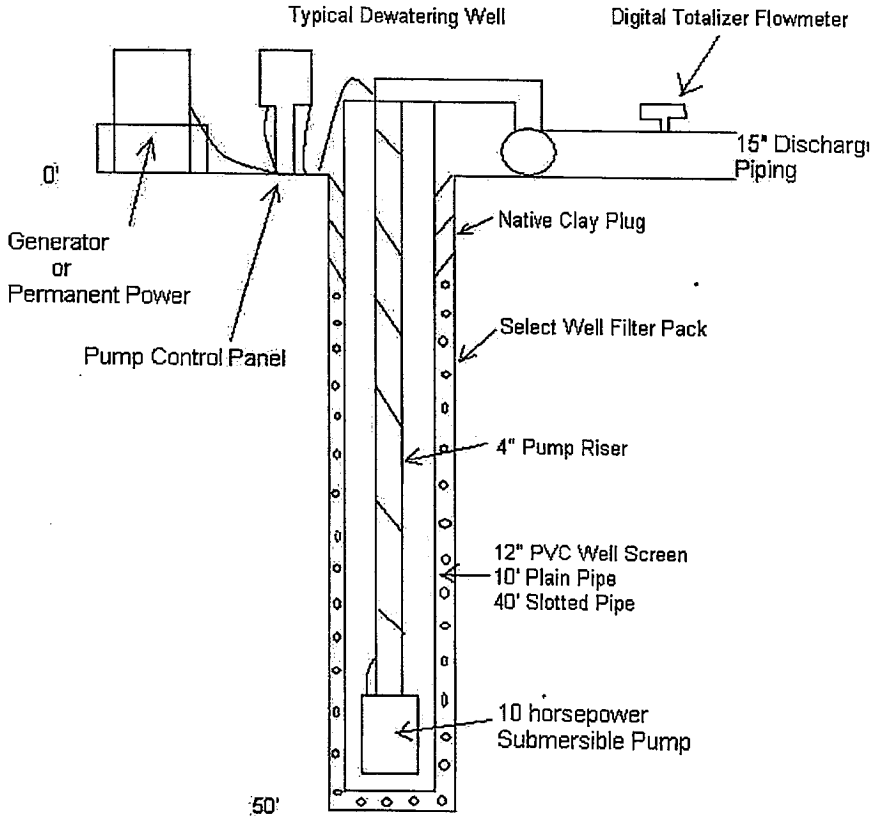

Estimated Quantities

Montoya Lateral - 3 Wells Running 24/7 Duration of Project.
Montoya Drain - 6 Wells Running 24/7 Duration of Project.
Montoya Main Lateral - 2 Wells Running 24/7 Duration of Project.
Equestre Drive - 10 wells Running 24/7 Duration of Project.

Estimated 240Gallons Per Minute Each Well

TDS Level Estimated At 1700 to 1900 PPM

● Typical Well Location

RECEIVED
APR 21 2010
EPCWID # 1

A1189

Dedicated to Outstanding Customer Service for a Better Community

S E R V I C E S O L U T I O N S S U C C E S S

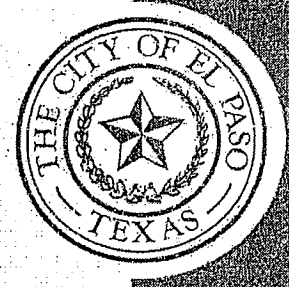

June 9, 2009

El Paso County Water Irrigation District #1
294 Candelaria
El Paso, TX 79907-5599

ATTN: Jesus "Chuy" Reyes

Mr. Reyes,

The purpose of this letter is to verify that the City of El Paso is a governmental entity as that term is defined in the Texas Tort Claims Act and as such operates under a policy of self-insurance. If you have any questions, you may contact me at 915-541-4448.

Very truly yours,

Irene Y. Morales

Irene Morales
Risk Manager
City of El Paso

EXHIBIT C

Mayor
John F. Cook

City Council

District 1
Ann Morgan Lilly

District 2
Susannah M. Byrd

District 3
Emma Acosta

District 4
Melina Castro

District 5
Rachel Quintana

District 6
Eddie Holguin Jr.

District 7
Steve Ortega

District 8
Beto O'Rourke

City Manager
Joyce A. Wilson