CITY OF EL PASO, TEXAS
AGENDA ITEM
DEPARTMENT HEAD'S SUMMARY FORM

DEPARTMENT: **Engineering and Construction Management**

AGENDA DATE: **July 26, 2011**

CONTACT PERSON NAME AND PHONE NUMBER: **R. Alan Shubert, P.E., City Engineer X4423**

DISTRICT(S) AFFECTED: **Citywide**

SUBJECT:
That the City Council approves the expenditure of additional available funding in the amount of Three Hundred Ninety Thousand Two Hundred Seventy and 90/100 dollars ($390,270.90) to J.A.R. Concrete, Inc. dba J.A.R. Construction, Inc. for additional construction costs for EPIA Runway 8R-26L & Taxiway L Extension & Reconstruction of Taxiway W. The change order provides for a medium-intensity lighting system with runway alignment indicator lights (MALSR) as requested by the Federal Aviation Administration. At the time the construction contract was awarded the project called for a medium-intensity approach lighting system with Sequenced Flashing Lights (MALSF), adding fifty-four (54) days of contract time for Contract Number 2010-268. The new contract sum, including this change order, is Seven Million Six Hundred Twenty Nine Thousand Nine Hundred Seven and 00/100 dollars ($7,629,907.00).

BACKGROUND / DISCUSSION:
The FAA requested a change in the approach lighting system from a MALSF to a MALSR. The FAA directed the City to proceed with the MALSF during the design of the project. After the construction contract was awarded, the MALSF equipment was not available and the FAA directed the City to change the system to a MALSR. The change order is funded by the FAA (95%) and PFC (5%). The contract is being extended by 54 days to allow for the material procurement.

PRIOR COUNCIL ACTION:
City Council approved the construction award of EPIA Runway 8R-26L & Taxiway L Extension & Reconstruction of Taxiway W on September 28, 2010.

AMOUNT AND SOURCE OF FUNDING:
$390,270.90 – Federal Aviation Administration Grant (funded 95%) and Passenger Facility Charges (funded 5%)

BOARD / COMMISSION ACTION:
N/A

**********REQUIRED AUTHORIZATION**********

DEPARTMENT HEAD: _____

(If Department Head Summary Form is initiated by Purchasing, client department should sign also)

Information copy to appropriate Deputy City Manager

RESOLUTION

BE IT RESOLVED BY THE CITY COUNCIL OF THE CITY OF EL PASO

That the City Council approves the expenditure of additional available funding in the amount of Three Hundred Ninety Thousand Two Hundred Seventy and 90/100 dollars ($390,270.90) to J.A.R. Concrete, Inc. dba J.A.R. Construction, Inc. for additional construction costs for EPIA Runway 8R-26L & Taxiway L Extension & Reconstruction of Taxiway W. The change order provides for a medium-intensity lighting system with runway alignment indicator lights (MALSR) as requested by the Federal Aviation Administration. At the time the construction contract was awarded the project called for a medium-intensity approach lighting system with Sequenced Flashing Lights (MALSF), adding fifty-four (54) days of contract time for Contract Number 2010-268. The new contract sum, including this change order, is Seven Million Six Hundred Twenty Nine Thousand Nine Hundred Seven and 00/100 dollars ($7,629,907.00).

ADOPTED THIS _____ DAY OF _____, 2011.

THE CITY OF EL PASO:

_____
John F. Cook
Mayor

ATTEST:

_____
Richarda Duffy Momsen, City Clerk

APPROVED AS TO FORM:

_____
Cynthia Osborn
Assistant City Attorney

APPROVED AS TO CONTENT:

_____
R. Alan Shubert, P.E.
City Engineer

PL # 77220 Change Order EPIA Runway 8R-26L
COSB

CONSTRUCTION CHANGE ORDER NO.: 4 **DATE:** July 18, 2011 [ ] SCOPE CHANGE

PROJECT: PIA Runway 8R-26L & Taxiway L Extension & Reconstruction of Taxiway **SOLICITATION NO.** 2010-268 [X] CONSTRUCTION CHANGE

Original Contract Amount:	$ 6,752,736.10	Contract Time to Subtantial Completion	180
Net Change by previous Change Orders:	$ 309,300 ~~699,570.90~~	Total days added due to Change Orders and CQN's	35
Net Change by previous Construction Quantity Notices:	$ 177,600.00	Total days added for this Change Order	54
Amount of this Construction Change Order:	$ 390,270.90	New Contract Time to Substantial Completion:	269
New Amended Contract Amount:	$7,629,907.00	Current Substantial Completion Due Date	9/29/2011
Change Order Percentage:	12.99%		

CONTRACTOR NAME: J.A.R. Construction

Please provide a detailed scope of work of the change order (see back for reason/justification):

The change in the approach lighting system from a MALSF to a MALSR will require an additional twenty-two bid items totaling $810,950.50 as well as the removal of nine existing bid items totaling -$420,679.60 for an overall total of $390,270.90. For detailed information, please refer to the attached spreadsheet.

CONSECUTIVE CALENDAR DAYS ADDED TO COMPLETION TIME: 54 **TOTAL CHANGE ORDER AMOUNT:** $ 390,270.90

CONTRACTOR

I, JOE ROSALES Jr, of _____ agree and accept the terms and conditions of this change order.

Signature: _____ Date: _____

CITY OF EL PASO (OWNER)

I, R. Alan Shubert, P.E., of the City of El Paso hereby authorize and direct the Contractor to proceed with additional work as described in this form.

Signature: _____ Date: _____

R. Alan Shubert, P.E., City Engineer

CONSTRUCTION CHANGE ORDER NO.: 4 **DATE:** July 18, 2011

[ ] SCOPE CHANGE
[X] CONSTRUCTION CHANGE

PROJECT: PIA Runway 8R-26L & Taxiway L Extension & Reconstruction of Taxiway L **SOLICITATION NO.** 2010-268

Project Number	G620AIP0026	Project Number	0	**PURCAHSE ORDER #**	1100000062
Class	0	Class	0		
Department	62620031	Department	0		
Fund	11516	Fund	0		
Account	508027	Account	0		

CONTRACTOR NAME: J.A.R. Construction

PROVIDE REASON/JUSTIFICATION FOR CHANGE ORDER:

At the request of the FAA, the approach lighting system will be modified from a MALSF (Medium-intensity approach lighting system with Sequenced Flashing Lights) to a MALSR (Medium-intensity lighting system with Runway Alignment Indicator Lights) system.

CONSECUTIVE CALENDAR DAYS ADDED TO COMPLETION TIME: 54 **TOTAL CHANGE ORDER AMOUNT:** $ 390,270.90

Project Manager recommends approval: _____

Engineering Division Manager recommends approval: _____

Financing Department approval: _____
(If Required)

CONSTRUCTION CHANGE ORDER NO.: 4 **DATE:** July 18, 2011 [X] INCREASE [ ] DECREASE

PROJECT: PIA Runway 8R-26L & Taxiway L Extension & Reconstruction of Taxiway **SOLICITATION NO.** 2010-268

Project Number G620AIP0026
Class
Department 62620031
Fund 11516
Account 508027

PURCHASE ORDER # 1100000062

CONTRACTOR NAME: J.A.R. Construction

AS A RESULT OF THIS CHANGE ORDER, PLEASE MAKE THE FOLLOWING ADJUSTMENT TO THE PUCHASE ORDER:

LINE	ADDED AMOUNT
1-1	390270.9

TOTAL NET CHANGE TO PURCHASE ORDER

390270.9

(should match cost below)

Additional funding/direction:

TOTAL CHANGE ORDER AMOUNT: $390,270.90

Project Manager

Engineering Division Manager recommends approval:

Contract Compliance

2010-268 EPIA Runway 8R-26L and Taxiway L Extension & Reconstruction of Taxiway W

Revised Change Order Proposal

ITEM	DESCRIPTION OF WORK	CONTRACT UNIT PRICE	UNIT	SCHEDULED QTY REMOVE	SCHEDULED QTY ADD	SCHEDULED VALUE REMOVE	SCHEDULED VALUE ADD
32	Bare #6 AWG Counterpoise	$1.05	LF		2,300.00	$0.00	$2,415.00
33	Single-way 2" Conduit, Direct Buried	$6.28	LF	-330.00		-$2,072.40	$0.00
34	Multiple-way Duct, Two 2" Conduit, Direct Buried	$8.37	LF	-3,380.00		-$28,290.60	$0.00
35	Multiple-way Duct, Six 2" Conduit, Direct Buried	$12.56	LF		450.00	$0.00	$5,652.00
36	Single-way 2" Conduit, Concrete Encased	$26.20	LF	-670.00		-$17,554.00	$0.00
37	Multiple-way Duct, Six 2" Conduit, Concrete Encased	$52.33	LF	-120.00		-$6,279.60	$0.00
40	Handhole Type I, F&I (L-110-5.1)	$5,800.00	EA		4.00	$0.00	$23,200.00
41	Intercept Handhole, F&I (L-110-5.2)	$6,802.00	EA	-2.00		-$13,604.00	$0.00
42	New (2)1/C #8 AWG 5KV Cable	$2.10	LF		2,300.00	$0.00	$4,830.00
44	New (2)1/C #4 AWG, 5KV Cable, (26L MALSF feeder)	$9.42	LF	-1,200.00		-$11,304.00	$0.00
45	New 25-pair, 19 Gauge Communications Cable (ASR) (Revocable)	$5.80	LF	-100.00		-$580.00	$0.00
46	New 50-pair, 19 Gauge Communications Cable (ASR) (Revocable)	$9.95	LF	-100.00		-$995.00	$0.00
64	R/W 26 L MALSF Facility, Complete (Installation Only)	$340,000.00	LS	-1.00		-$340,000.00	$0.00
70	1/C 1/0 Counterpoise Wire	$3.74	LF		3,700.00	$0.00	$13,838.00
80	1/C 3/0 Use 600 V	$5.46	LF		4,100.00	$0.00	$22,386.00
81	1/C 4/0 Use 600 V	$6.90	LF		1,400.00	$0.00	$9,660.00
82	1/C #2 Use 600 V	$2.76	LF		1,000.00	$0.00	$2,760.00
83	1/C #4 Use 600 V	$2.07	LF		4,600.00	$0.00	$9,522.00
84	1/C #6 Use 600 V	$1.62	LF		6,500.00	$0.00	$10,530.00
85	1/C #10 Use 600 V	$1.15	LF		1,000.00	$0.00	$1,150.00
86	12 PR #19 Control Cable	$3.45	LF		1,800.00	$0.00	$6,210.00
87	Multiple-way Duct, Two 2" PVC Duct, Concrete Encased	$17.25	LF		220.00	$0.00	$3,795.00
88	Multiple-way Duct, Three 2" PVC Duct, Concrete Encased	$23.00	LF		1,000.00	$0.00	$23,000.00
89	Multiple-way Duct, Four 2" PVC Duct, Concrete Encased	$28.75	LF		400.00	$0.00	$11,500.00
90	Multiple-way Duct, Five 2" PVC Duct, Concrete Encased	$57.50	LF		600.00	$0.00	$34,500.00
91	Multiple-way Duct, Eight 2" PVC Duct, Concrete Encased	$74.75	LF		210.00	$0.00	$15,697.50
92	Pull Box Aircraft Rated	$8,050.00	EA		14.00	$0.00	$112,700.00
93	R/W 26 L MALSR Facility, Complete (Installation Only)	$352,200.00	LS		1.00	$0.00	$352,200.00
94	Grounding of Abandoned FAA Cables	$195.50	EA		16.00	$0.00	$3,128.00
95	5kV REIL and PAPI Services	$82,800.00	LS		1.00	$0.00	$82,800.00
96	Dirt Road with Channel Crossing	$59,477.00	LS		1.00	$0.00	$59,477.00
						-$420,679.60	***$810,950.50***
	TOTAL						**$390,270.90**

Further Breakdown of Item #93: R/W 26 L MALSR Facility, Complete (Installation Only)						
MALSR Distribution Rack	$17,500.00	LS		1.00		$17,500.00
MALSR Facility Site	$34,600.00	LS		1.00		$34,600.00
MALSR Equipment Installation	$74,750.00	LS		1.00		$74,750.00
MALS Bar 18 Fixtures	$2,070.00	EA		18.00		$37,260.00
MG-20 LIR	$12,650.00	EA		14.00		$177,100.00
MALSR Electrical Service	$10,990.00	EA		1.00		$10,990.00
SubTotal for MALSR Facility						***$352,200.00***

Kimley-Horn
and Associates, Inc.

Suite 300
7878 N. 16th Street
Phoenix, Arizona
85020

July 18, 2011

Ms. Rachel Johnson
Project Compliance Specialist
City of El Paso
Purchasing Division
Two Civic Center Plaza
El Paso, Texas 79901-1196

Re: EPIA "Runway 8R-26L and Taxiway L Extension" (City of El Paso Project Number: 238290) (FAA AIP Number 3-48-0077-27-09)
MALSR Change Order

Dear Ms. Johnson:

Kimley-Horn and Associates, Inc. has reviewed the change order costs for the MALSR installation received for the above referenced project. Based on the review of these costs and further discussions and refinements, Kimley-Horn and Associates, Inc. determined that costs presented by J.A.R. Construction are acceptable for this project as outlined in the specifications.

The recommended change order award amount is as follows:

Sum Total Base Bid	$ 390,270.90
Total	$ 390,270.90

Please review the recommendation for award for concurrence with the Federal Aviation Administration. Should you have questions, or need further information, please don't hesitate to call me at (602) 944-5500 or on my cell phone at 602-799-1231.

Sincerely,

KIMLEY-HORN AND ASSOCIATES, INC.

Michael A. Norby, P.E.
Project Engineer/Manager

STATE OF TEXAS
MICHAEL ALBERT NORBY
87178

Copy:
File 091348019
Monica Lombrana – EPIA
Antonio Marmolejo – EPIA
Sam Rodriguez – City of El Paso
Victoria Ruiz – City of El Paso
Reading File

TEL 602 944 5500
FAX 602 944 7423

C:\El Paso\8R-26L Extension\AWARD-LET-MALSR Change Order JAR-7-18-2011.doc

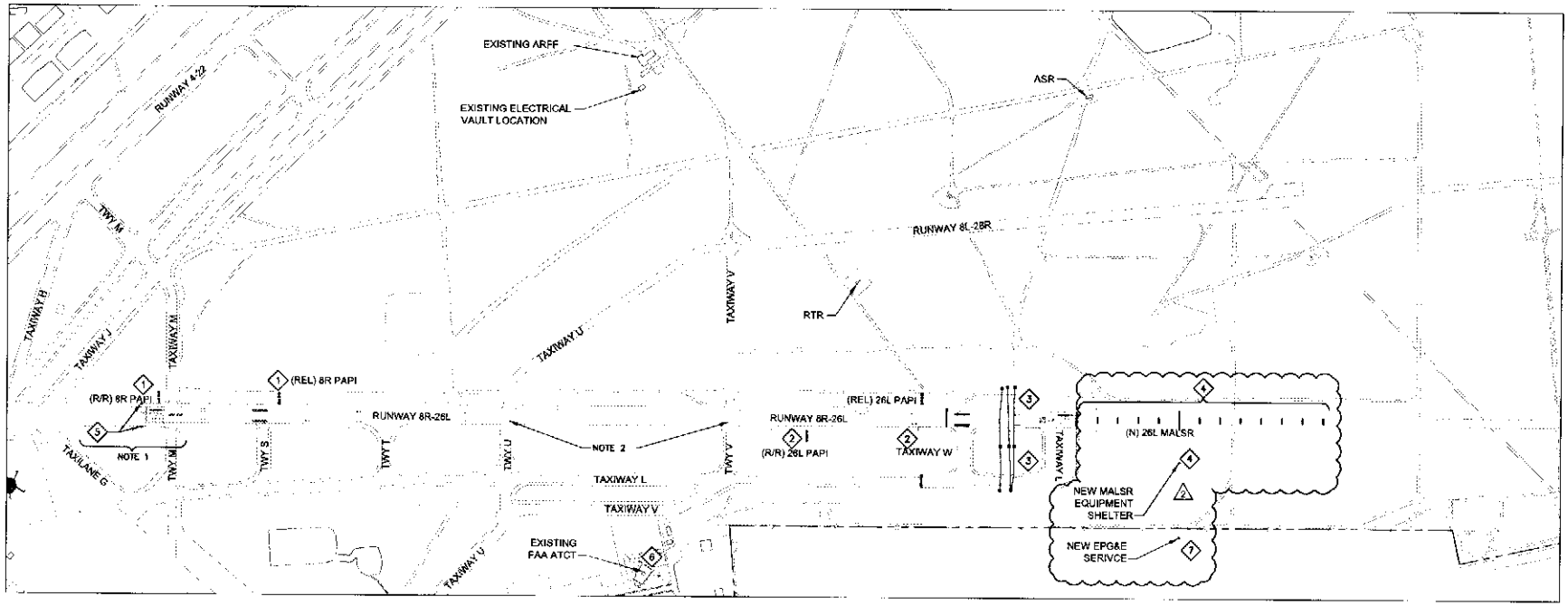

FAA NAVAID DRAWINGS GENERAL NOTES

1. COORDINATE WITH FAA PRIOR TO START OF ANY WORK ON EXISTING OR NEW FACILITIES TO ASSURE CONTINUITY OF OPERATION AND TO SECURE FAA INSPECTION SERVICES DURING CONSTRUCTION.
2. COORDINATE WITH CIVIL PHASING PLANS AND THE FAA REGARDING EXACT PHASING REQUIREMENTS.
3. UNDER NO CONDITION SHALL THE CONTRACTOR REMOVE ANY FAA FACILITY FROM OPERATION WITHOUT PRIOR WRITTEN APPROVAL OF THE FAA.
4. DRAWINGS DO NOT PURPORT TO SHOW ALL EXISTING ELEMENTS IN AREAS OF DEMOLITION. CONTRACTOR SHALL REVIEW THE SITE AND RECORD DRAWINGS TO VERIFY THE DEMOLITION EFFORT INVOLVED. INDICATED EXISTING FAA CABLE ALIGNMENTS ARE APPROXIMATIONS AND ARE TO BE USED FOR REFERENCE ONLY. CONTRACTOR SHALL BE RESPONSIBLE FOR PROTECTION OF EXISTING CABLES DURING CONSTUCTION.
5. CONTRACTOR SHALL VERIFY EQUIPMENT & CABLE DESIGNATIONS & STATUS PRIOR TO REMOVAL. COORDINATE WITH FAA PERSONNEL PRIOR TO REMOVAL OR DISCONNECTING OF ANY FAA CABLES. REMOVE ONLY THOSE CABLES/CONDUITS INDICATED AS TO-BE-REMOVED OR REPLACED. ALL OTHERS ARE TO REMAIN FUNCTIONAL.
6. CABLE REMOVAL:
   A. DIRECT BURIAL: REMOVE FROM WITHIN MANHOLES AND HANDHOLES AND REMOVE IN AREAS WHERE EXCAVATION REQUIRES DISTURBING, ABANDON ELSEWHERE.
7. UNLESS OTHERWISE NOTED, ALL REMOVED MATERIAL SHALL BECOME THE PROPERTY OF THE CONTRACTOR AND SHALL BE REMOVED FROM THE SITE AND DISPOSED OF IN ACCORDANCE WITH APPLICABLE LOCAL ORDINANCES.
8. POWER AND SIGNAL/COMM CABLES RUNNING BETWEEN COMMON END POINTS MAY BE RUN IN SEPARATE TRENCHES OR IN A COMMON TRENCH. PROVIDE MIN OF 12" SEPARATION BETWEEN POWER AND SIGNAL/COMM CONDUITS.
9. THE CONTRACTOR SHALL MAINTAIN QUALIFIED PERSONNEL, WITH THE APPROPRIATE EQUIPMENT, FOR THE INSTALLATION AND SPLICING OF FAA POWER AND COMM CABLES. SUCH PERSONNEL SHALL BE CAPABLE OF 20 MINUTE RESPONSE TIME IF THEY ARE NOT ALREADY PRESENT ON THE AIRFIELD. CONTRACTOR SHALL MAINTAIN ON HAND SUFFICIENT MATERIAL REQ'D TO PROVIDE TEMPORARY FAA POWER AND COMM CABLES AND/OR THE REPAIR OF SAME. THESE ITEMS WILL NOT BE AVAILABLE FROM THE LOCAL FAA.
10. DEMOLITION/SALVAGE NOTES: THE SALVAGE OF MATERIALS THAT ARE INDICATED TO BE REINSTALLED AT NEW LOCATIONS (ELECTRONICS AND THEIR SUPPORT HARDWARE, LIGHT FIXTURES, CONTROL BOXES/CABINETS, TRANSFORMERS, ETC) SHALL BE COORDINATED WITH THE FAA. ITEMS SELECTED FOR SALVAGE TO THE FAA SHALL BE TRANSPORTED TO A DESIGNATED ON-AIRPORT LOCATION. ALL OTHER MATERIALS (CABLES, CONDUITS, HANDHOLES, CONCRETE BASE & FOUNDATIONS, ETC.) AS WELL AS THE MATERIAL DEEMED NON-SALVAGABLE BY THE FAA SHALL BECOME THE PROPERTY OF THE CONTRACTOR AND SHALL BE REMOVED FROM THE SITE AND DISPOSED OF PER APPLICABLE CODES AND REGULATIONS.

SCOPE OF CONTRACTOR ELECTRICAL WORK - FAA OWNED FACILITIES

1. REMOVE & SALVAGE FAA OWNED RUNWAY 8R PAPI FOR REINSTALLATION. COORDINATE WITH FAA FOR TESTING AND RE-COMMISSIONING. (E1 SERIES AND DRAWING E4.1).
2. REMOVE & SALVAGE FAA OWNED RUNWAY 26L PAPI FOR REINSTALLATION. COORDINATE WITH FAA FOR TESTING AND RE-COMMISSIONING. (E1 SERIES AND DRAWING E4.1).
3. INSTALL NEW DUCT AND HANDHOLE SYSTEM TO INTERCEPT AND ENCASE FAA POWER AND COMM CABLES. (E1 SERIES).
4. INSTALL NEW FAA OWNED RUNWAY 26L MALSR.
5. INSTALL FAA FURNISHED 8R REIL. 2

SCOPE OF FAA ELECTRICAL WORK - FAA OWNED FACILITIES

6. INSTALL RADIO CONTROL EQUIPMENT FOR 8R REIL & 26L MALSR IN ATCT CAB.

SCOPE OF EPG&E ELECTRICAL WORK - FAA OWNED FACILITIES

7. NEW ELECTRICAL SERVICE TO 26L MALSR SHELTER. 2

SCOPE OF WORK - GENERAL NOTES

1. WORK IN THE TAXIWAY 'M' TSA AND AREAS TO THE WEST OF TAXIWAY 'M' SHALL BE DONE AT NIGHT AS COORDINATED BY ELP OPS.
2. BOTH TAXIWAY 'U' & TAXIWAY 'V' CAN NOT BE CLOSED AT THE SAME TIME. COORDINATE WITH CIVIL WORK PHASING & AS REQUIRED BY ELP OPS.

N

GRAPHIC SCALE
500 0 250 500 1000
(IN FEET)

AIP PROJECT NO. 3-48-0077-27-09

REFERENCES - BENCH MARKS

DATE	REVISIONS	BY
07/11	FAA 26L MALSR	ECL

FIRM'S NAME: Kimley-Horn and Associates, Inc.
© 2009 KIMLEY-HORN AND ASSOCIATES, INC.
7828 North Mesa Street, Suite 200
Fremont, Ohio 43420 (432) 544-1800
TEXAS FIRM REGISTRATION NO. F-928

FIRM'S SEAL

SCALE: Horiz. 1" = 400' Vert. 1" = 400'
Date: 07/18/13
Designed by: ECL
Drawn by: JDB
Checked by: DTE
Approved by: ECL

PROJECT NAME
EL PASO INTERNATIONAL AIRPORT
RUNWAY 8R-26L AND TAXIWAY L EXTENSION

CITY OF EL PASO

BASE BID

FAA OWNED FACILITIES SCOPE OF WORK

PROJECT NO. 3913456019
FILE NO. 3480186L4/00

E4.0

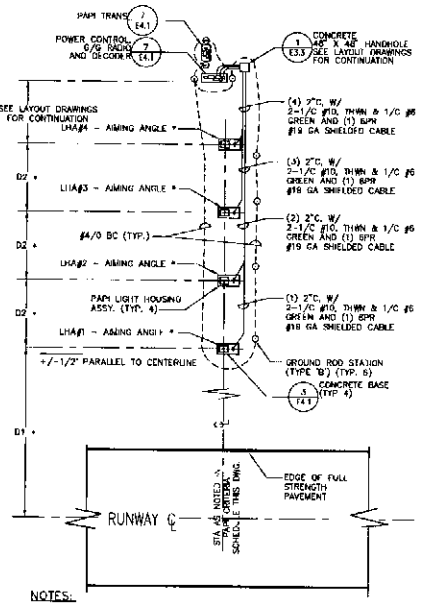

NOTES:

1. ALL UNITS IN A BAR SHALL BE LOCATED ON A LINE PERPENDICULAR TO THE RUNWAY CENTERLINE. THE FRONT FACES OF EACH LIGHT UNIT TO BE WITHIN ±6" OF THIS LINE.
2. WITHIN 5' OF THE LHA AND EQUIPMENT PADS: 4" DEEP, 3/4" GRAVEL.
3. SEE PAPI CRITERIA SCHEDULE FOR * DATA.
4. 26L PAPI SITE PLAN SIMILAR BUT MIRRORED.

1 8R PAPI SITE PLAN

SEE NOTE 4 FOR 26L PAPI PLAN

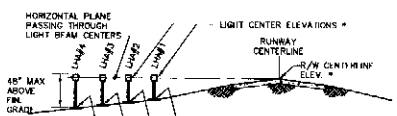

NOTES:

1. SEE PAPI CRITERIA SCHEDULE FOR THESE * DATA.

2 TYPICAL PAPI SECTION

SCALE: NTS

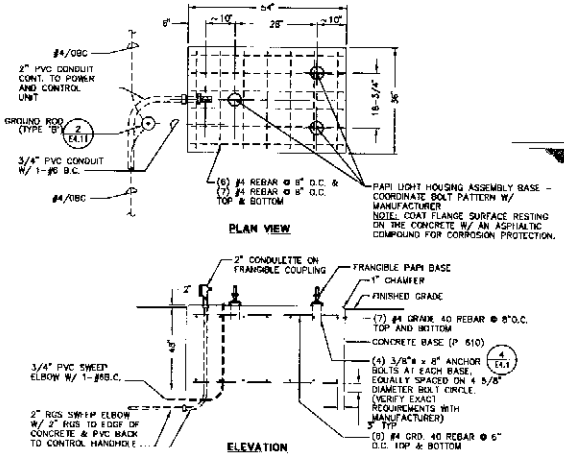

NOTE:
FINISH TOP OF CONCRETE BASE WITH 1/4"/FT. SLOPE, BOTH DIRECTIONS FROM LONGITUDINAL AXES.

3 PAPI LIGHT BOX CONCRETE BASE

SCALE: NTS

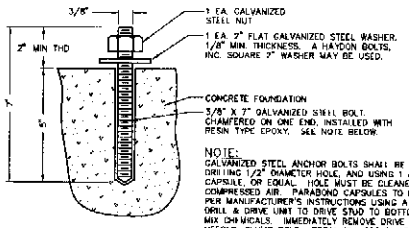

NOTE:
GALVANIZED STEEL ANCHOR BOLTS SHALL BE INSTALLED BY DRILLING 1/2" DIAMETER HOLE, AND USING 1 PARABOND CAPSULE, OR EQUAL. HOLE MUST BE CLEANED OUT USING COMPRESSED AIR. PARABOND CAPSULES TO BE INSTALLED PER MANUFACTURER'S INSTRUCTIONS USING A ROTARY HAMMER DRILL & DRIVE UNIT TO DRIVE STUD TO BOTTOM OF HOLE AND MIX CHEMICALS. IMMEDIATELY REMOVE DRIVE UNIT AND, IF NEEDED, PLUMB BOLT. RESIN WILL SET IN ABOUT 20 MINUTES.

4 CHEMICAL ANCHOR BOLT DETAIL

SCALE: NTS

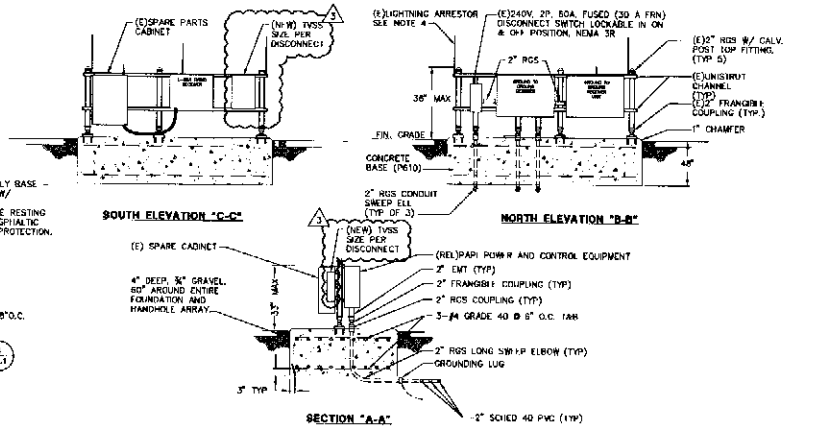

5 PAPI POWER & CONTROL UNIT SECTIONS

SCALE: NTS

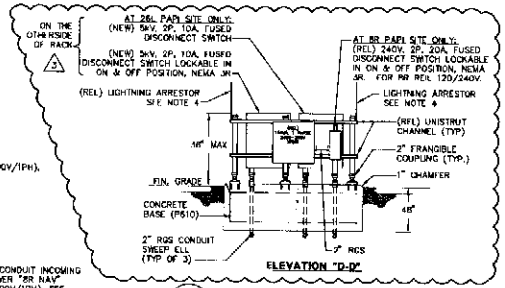

7 PAPI TRANSFORMER

SCALE: NTS

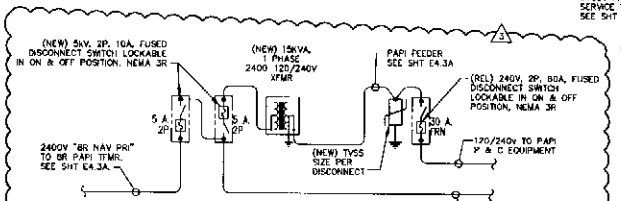

8 RUNWAY 26L PAPI SITE SINGLE LINE

SCALE: NTS

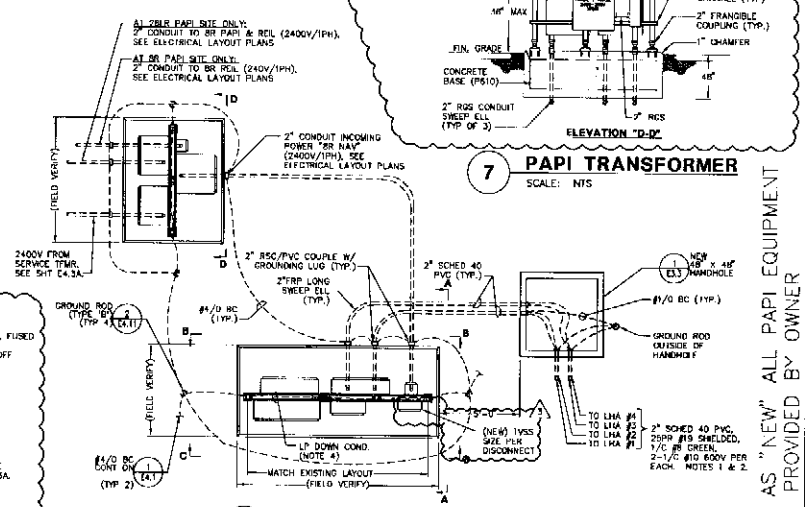

6 PAPI POWER & CONTROL UNIT PLAN

SCALE: NTS

PAPI CRITERIA SCHEDULE

R/W	STA	D1 (DIST. FROM R/W ℄ TO ℄ OF LHA #1) (FT)	D2 LIGHT HOUSING ASSEMBLY (LHA) SPA. O.C. (FT)	R/W CL ELEV. (FT)	LIGHT CENTER ELEVATION (FT)	TOP OF CONCRETE BASE ELEV (2" ABOVE FINISHED GRADE) LHA#1	LHA#2	LHA#3	LHA#4	AIMING ANGLE BASED ON 3° 30' GLIDE PATH LHA#1	LHA#2	LHA#3	LHA#4	EFFECTIVE VISUAL THRESHOLD CROSSING HEIGHT (TCH)	THRESHOLD R/W CENTERLINE ELEVATION (FT)	R/W
8R	123+81.70	135'-0"	30'-0"	3934.9'	3934.90' (AT R/W ELEV.)	FIELD VERIFY	FIELD VERIFY	FIELD VERIFY	FIELD VERIFY	3° 30'	3° 10'	2° 50'	2° 30'	75.0'	3927.07'	8R
26L	186+13.1	135'-0"	30'-0"	3957.43'	3957.93' (0.5' ABOVE R/W)	FIELD VERIFY	FIELD VERIFY	FIELD VERIFY	FIELD VERIFY	3° 30'	3° 10'	2° 50'	2° 30'	75.0'	3961.87'	26L

SCHEDULE NOTE:
* COORD W/ FAA FOR AIMING ANGLES PRIOR INSTALLING PLACARD AND FLIGHT TESTING.

GENERAL PAPI NOTES:

1. SCOPE OF WORK SHALL BE TO REMOVE AND SALVAGE ALL EQUIPMENT, SUPPORT STRUCTURE ELEMENTS, MOUNTING HARDWARE, CONDUITS, ETC FOR REINSTALLATION AT NEW SITE. CONCRETE FOUNDATIONS, UNDERGROUND CONDUITS AND CONDUCTORS SHALL BE DEMOLISHED AND REMOVED. INSTALL NEW CONCRETE FOUNDATIONS, UNDERGROUND CONDUITS AND CONDUCTORS AND REINSTALL SALVAGED EQUIPMENT.
2. COORDINATE W/ EXISTING PAPI EQUIPMENT FOR EXACT POWER AND CONTROL WIRING REQUIREMENTS.
3. ALL CONDUCTORS FROM HANDHOLE TO AND WITHIN/BETWEEN CONTROL UNITS SHALL BE 600V RATED UNLESS OTHERWISE REQUIRED BY PAPI MANUFACTURER.
4. PROVIDE NEW #4/0, 19 STR DOWN CONDUCTOR THROUGH FOUNDATION WITH 1" PVC SLEEVE (TYP 2 PLACES) AND CONNECT TO GROUND ROD SYSTEM.

U.O.N. AS "NEW" ALL PAPI EQUIPMENT TO BE PROVIDED BY OWNER

3-46-0077-27-09

REFERENCES - BENCH MARKS

DATE	REVISIONS	BY
5/16/11	30% PHASE SUBMITTAL	EC
5/16/11	ADD TVSS & 8W DISC	EC

FIRM'S NAME: Kimley-Horn and Associates, Inc.
TEXAS FIRM REGISTRATION NO. F-928

FIRM'S SEAL

SCALE: Horiz. 1" = #60 Vert. 1" = #60
Date: 05/16/10
Designed by: JXK
Drawn by: JXK
Checked by: DYE
Approved by: ECL

PROJECT NAME: EL PASO INTERNATIONAL AIRPORT
RUNWAY 8R-26L AND TAXIWAY L EXTENSION

CITY OF EL PASO

BASE BID

PAPI INSTALLATION DETAILS

PROJECT NO. 091348019

FILE NO. 348019E401

E4.1

SHEET 96 of 126

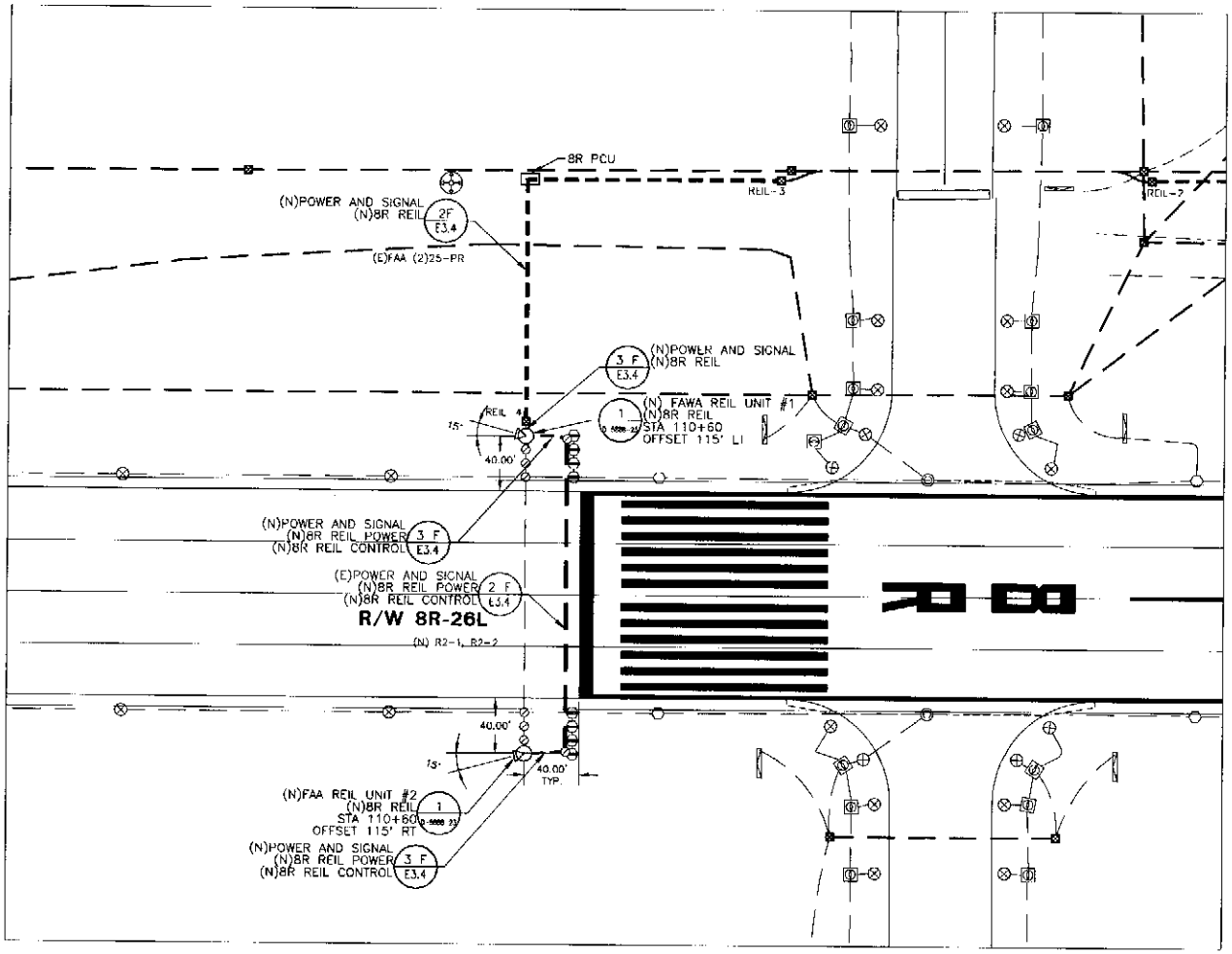

2 **8R REIL PLAN VIEW**
SCALE: NTS (SEE NOTE AT RIGHT)

SCHEDULE OF REFERENCED FAA 8R REIL FACILITY STANDARD REFERENCE DRAWINGS

DWG. NO.	DRAWING TITLE
D-5888-23	REIL INSTALLATION LAYOUT
D-5888-26	COMBINED A/G & G/G RADIO CONTROL INSTALLATION
D-5888-28	MISCELLANEOUS DETAILS
D-5888-29	MISCELLANEOUS DETAILS-2
D-5888-30	MISCELLANEOUS DETAILS-3

STANDARD DRAWING NOTE:
THE ABOVE LIST IS INTENDED TO PROVIDE ADDITIONAL GENERAL DETAILS FOR THE MALSR FACILITY. REFER TO DRAWINGS E1.2 FOR SITE SPECIFIC DETAILS.

FAA FURNISHED EQUIPMENT

PART DESCRIPTION	QUANTITY
POWER AND CONTROL CABINET	1
IDENTIFIER UNIT ASSEMBLY	2
AIR/GROUND - RECEIVER/CONTROLLER	1

FAA FURNISHED EQUIPMENT NOTE:
ALL OTHER EQUIPMENT NEEDED FOR A COMPLETE MALSR INSTALLATION SHALL BE CONTRACTOR FURNISHED

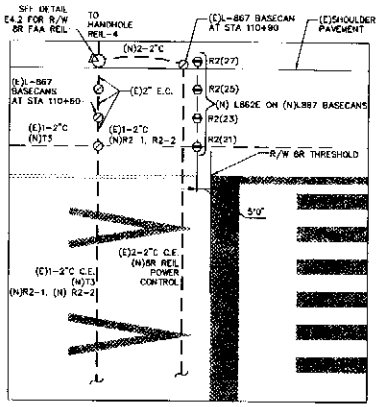

1 **8R THRESHOLD DETAIL**
SCALE: 1:20

NOTE: SIMILAR INSTALLATION ON SOUTH SIDE OF RUNWAY.

ALL REIL EQUIPMENT TO BE PROVIDED BY OWNER

AIP PROJECT NO. 3-48-0077-27-09

REFERENCES - BENCH MARKS

DATE	REVISIONS	BY
6/1/11	FAA 8R REIL (NEW DWG)	ECL

FIRMS NAME
Kimley-Horn and Associates, Inc.
© 2008 KIMLEY-HORN AND ASSOCIATES, INC.
7878 North 16th Street, Suite 300
Phoenix, Arizona 85020 (602) 944-5500
TEXAS FIRM REGISTRATION NO. F-928

FIRMS SEAL

SCALE
Hor. NTS
Ver. NTS
Date 07/16/10
Designed by XXX
Drawn by XXX
Checked by DYE
Approved by ECL

PROJECT NAME
EL PASO INTERNATIONAL AIRPORT
RUNWAY 8R-26L AND TAXIWAY L EXTENSION

CITY OF EL PASO

RUNWAY 8R-26L

R/W 8R REIL INSTALLATION DETAILS AND PLAN

PROJECT NO. 081348619
FILE NO. 34801BEL402

E4.2
SHEET 97 of 125

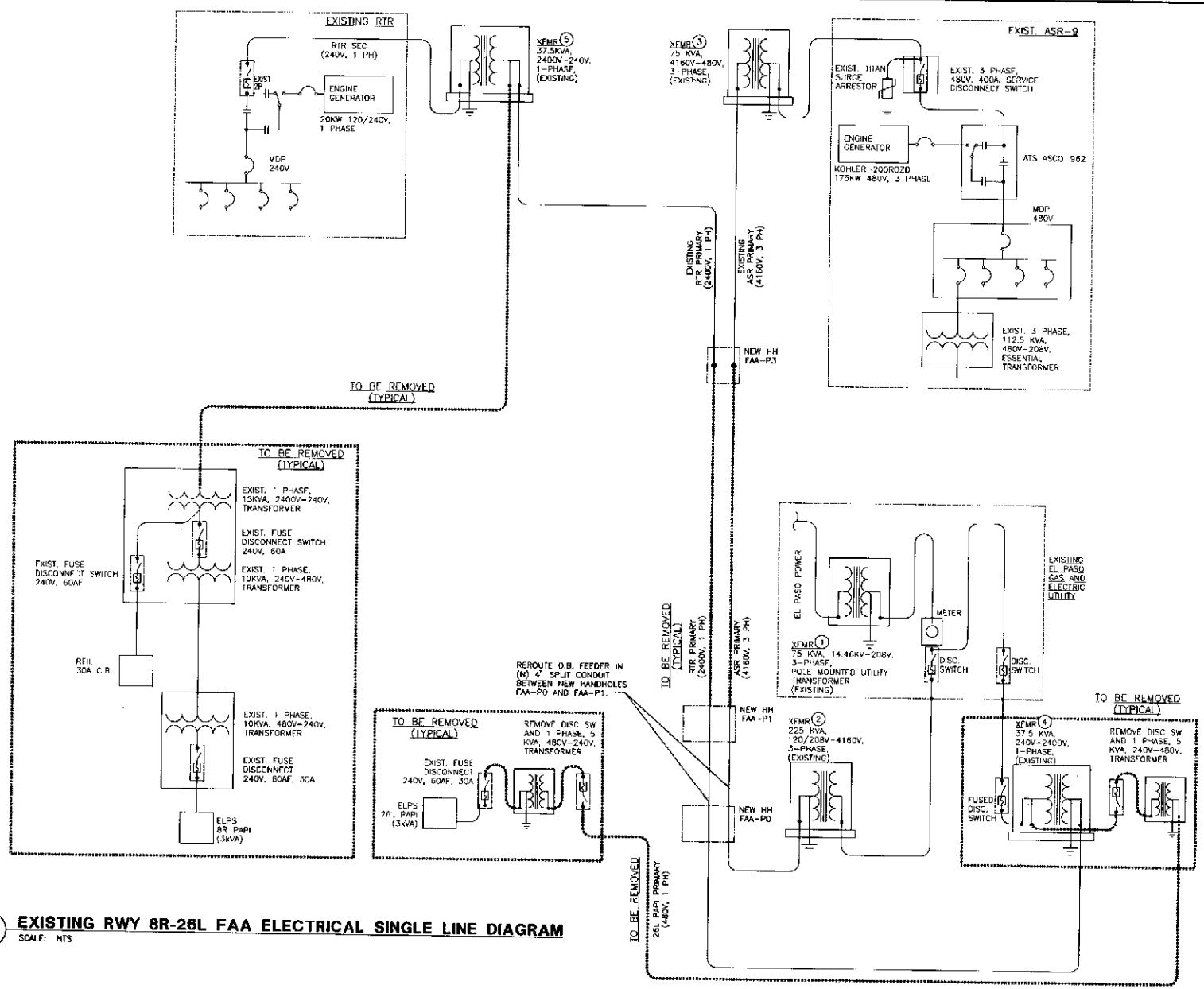

1 EXISTING RWY 8R-26L FAA ELECTRICAL SINGLE LINE DIAGRAM

SCALE: NTS

AIP PROJECT NO. 3-48-0077-27-09

REFERENCES • BENCH MARKS

DATE	REVISIONS	BY
06/11	PER PTL MULLER (SEE SHEET 125)	ECL

FIRM'S NAME: Kimley-Horn and Associates, Inc.

© 2008 KIMLEY-HORN AND ASSOCIATES, INC.

Phone No. (915) 533-3000 Fax No. (915) 533-3001 Texas Reg. No. (915) 541-9800

TEXAS FIRM REGISTRATION NO. F-928

FIRM'S SEAL

SCALE: Horz. 1" = 40' Vert. 1" = 40'

Date 07/19/10 Drawn by JOA Checked by EPE Approved by ECL

PROJECT NAME: EL PASO INTERNATIONAL AIRPORT RUNWAY 8R-26L AND TAXIWAY L EXTENSION

CITY OF EL PASO

BASE BID

EXISTING NAVAIDS SINGLE LINE DIAGRAM

PROJECT NO. 097348018

FILE NO. 348018EL403

E4.3

SHEET 98 of 125

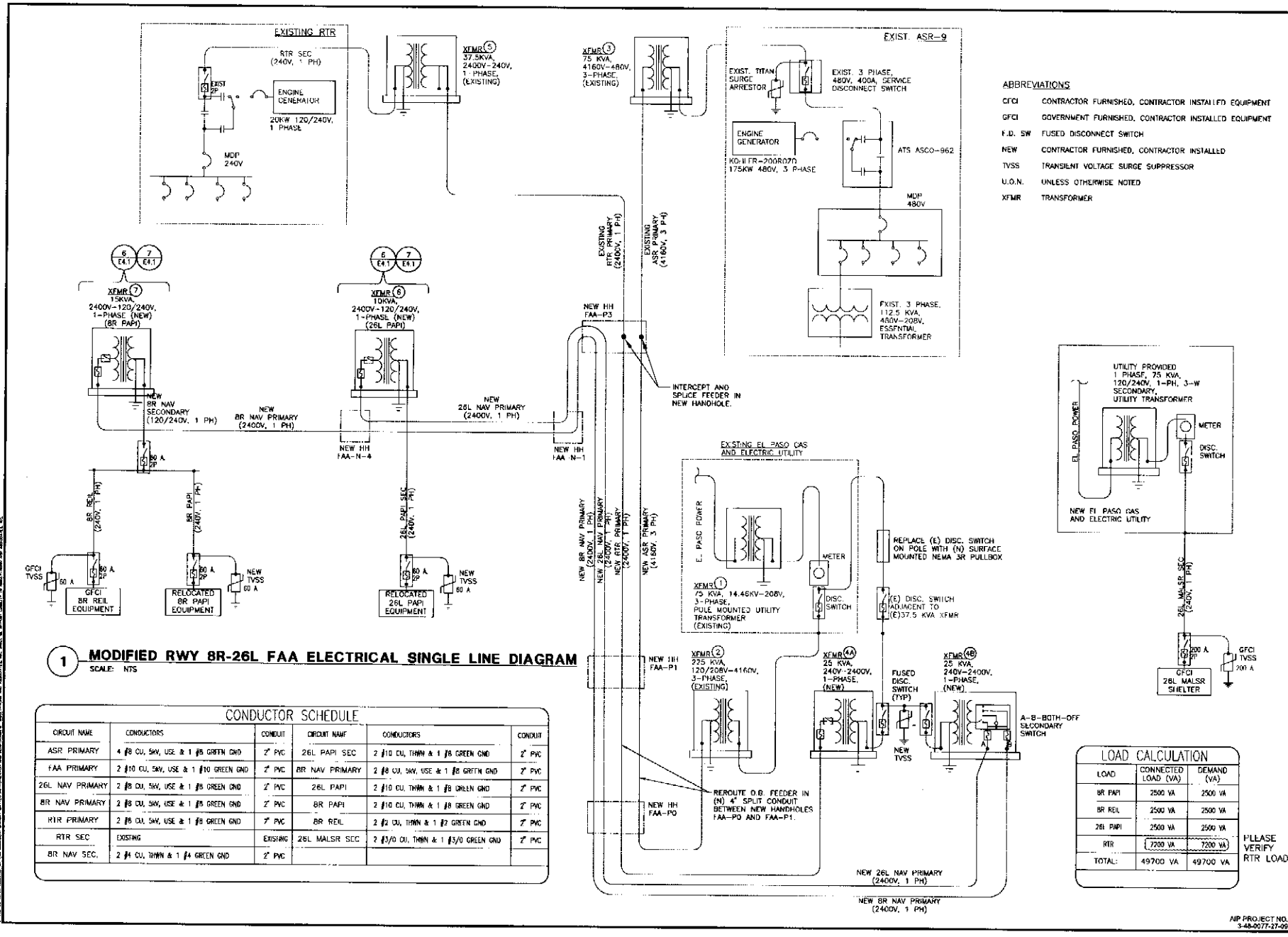

ABBREVIATIONS

CFCI	CONTRACTOR FURNISHED, CONTRACTOR INSTALLED EQUIPMENT
GFCI	GOVERNMENT FURNISHED, CONTRACTOR INSTALLED EQUIPMENT
F.D. SW	FUSED DISCONNECT SWITCH
NEW	CONTRACTOR FURNISHED, CONTRACTOR INSTALLED
TVSS	TRANSIENT VOLTAGE SURGE SUPPRESSOR
U.O.N.	UNLESS OTHERWISE NOTED
XFMR	TRANSFORMER

1 MODIFIED RWY 8R-26L FAA ELECTRICAL SINGLE LINE DIAGRAM

SCALE: NTS

CONDUCTOR SCHEDULE

CIRCUIT NAME	CONDUCTORS	CONDUIT	CIRCUIT NAME	CONDUCTORS	CONDUIT
ASR PRIMARY	4 #8 CU, 5kV, USE & 1 #8 GREEN GND	2" PVC	26L PAPI SEC	2 #10 CU, THWN & 1 #8 GREEN GND	2" PVC
FAA PRIMARY	2 #10 CU, 5kV, USE & 1 #10 GREEN GND	2" PVC	8R NAV PRIMARY	2 #8 CU, 5kV, USE & 1 #8 GREEN GND	2" PVC
26L NAV PRIMARY	2 #8 CU, 5kV, USE & 1 #8 GREEN GND	2" PVC	26L PAPI	2 #10 CU, THWN & 1 #8 GREEN GND	2" PVC
8R NAV PRIMARY	2 #8 CU, 5kV, USE & 1 #8 GREEN GND	2" PVC	8R PAPI	2 #10 CU, THWN & 1 #8 GREEN GND	2" PVC
RTR PRIMARY	2 #6 CU, 5kV, USE & 1 #8 GREEN GND	2" PVC	8R REIL	2 #2 CU, THWN & 1 #2 GREEN GND	2" PVC
RTR SEC	EXISTING	EXISTING	26L MALSR SEC	2 #3/0 CU, THWN & 1 #3/0 GREEN GND	2" PVC
8R NAV SEC.	2 #4 CU, THWN & 1 #4 GREEN GND	2" PVC			

LOAD CALCULATION

LOAD	CONNECTED LOAD (VA)	DEMAND (VA)
8R PAPI	2500 VA	2500 VA
8R REIL	2500 VA	2500 VA
26L PAPI	2500 VA	2500 VA
RTR	7200 VA	7200 VA
TOTAL:	49700 VA	49700 VA

PLEASE VERIFY RTR LOAD

AIP PROJECT NO. 3-48-0077-27-00

REFERENCES - BENCH MARKS

DATE	REVISIONS	BY
3/24/11	1 ADDED ALL SYSTEM (NEW DWG)	ECL

FIRM'S NAME: Kimley-Horn and Associates, Inc. TEXAS FIRM REGISTRATION NO. F-928

FIRM'S SEAL

SCALE: Horz. 1" = 40' Vert. 1" = 40'

Date 07/13/10 Designed by XXX Drawn by XXX Checked by ZYE Approved by ECL

PROJECT NAME: EL PASO INTERNATIONAL AIRPORT RUNWAY 8R-26L AND TAXIWAY L EXTENSION

CITY OF EL PASO

RUNWAY 8R-26L

MODIFIED NAVAIDS SINGLE LINE DIAGRAM

PROJECT NO. 081348019

FILE NO. 348019EL403

E4.3A

SHEET 89 of 125

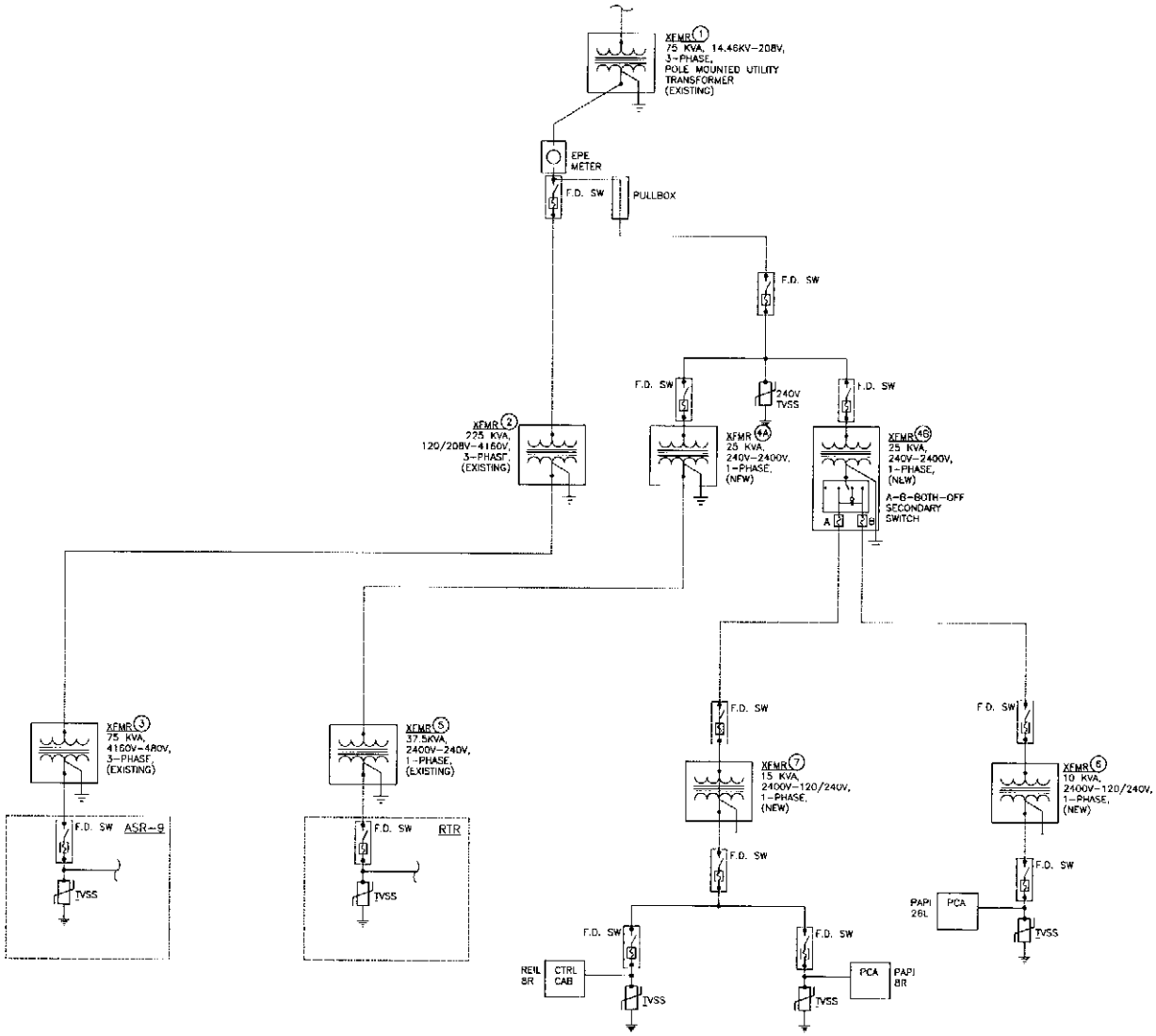

1 **RWY 8R-26L FAA ELECTRICAL SINGLE LINE DIAGRAM - END STATE**

SCALE: NTS

AIP PROJECT NO. 3-48-0077-27-06

REFERENCES - BENCH MARKS

DATE	REVISIONS	BY
04/11	REVISIONS PER NAVAIDS SYSTEM PLAN (NSP)	EGL

FIRM'S NAME

Kimley-Horn and Associates, Inc.

© 2009 KIMLEY-HORN AND ASSOCIATES, INC.
Park Place, Ste. 100 Dallas, TX 75231
Phone No. (214) 369-5800
TEXAS FIRM REGISTRATION NO. F-928

FIRM'S SEAL

SCALE
H: N.T.S. V: N.T.S.

Date 07/14/11
Designed by JCS
Drawn by JCS
Checked by DVE
Approved by EGL

PROJECT NAME

EL PASO INTERNATIONAL AIRPORT
RUNWAY 8R-26L AND TAXIWAY L EXTENSION

CITY OF EL PASO

RUNWAY 8R-26L

NAVAIDS SINGLE LINE DIAGRAM END STATE

PROJECT NO. 081348019

FILE NO. 3480108L403

E4.3B

SHEET 100 of 125

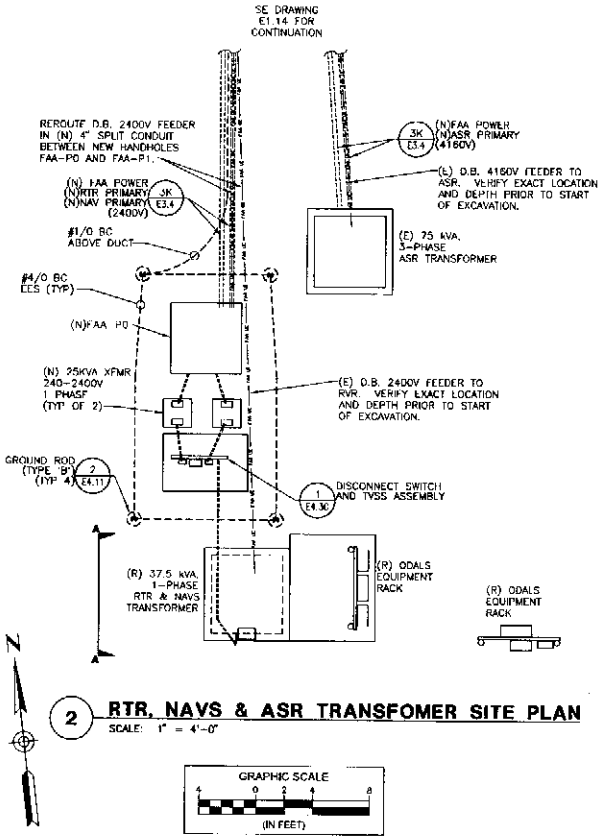

2 RTR, NAVS & ASR TRANSFOMER SITE PLAN

SCALE: 1" = 4'-0"

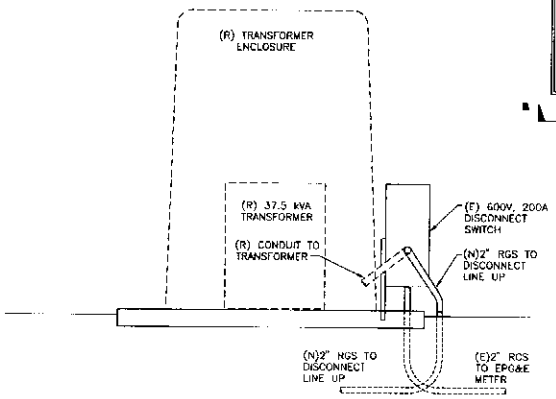

A EXISTING DISCONNECT ELEVATION

SCALE: NO SCALE

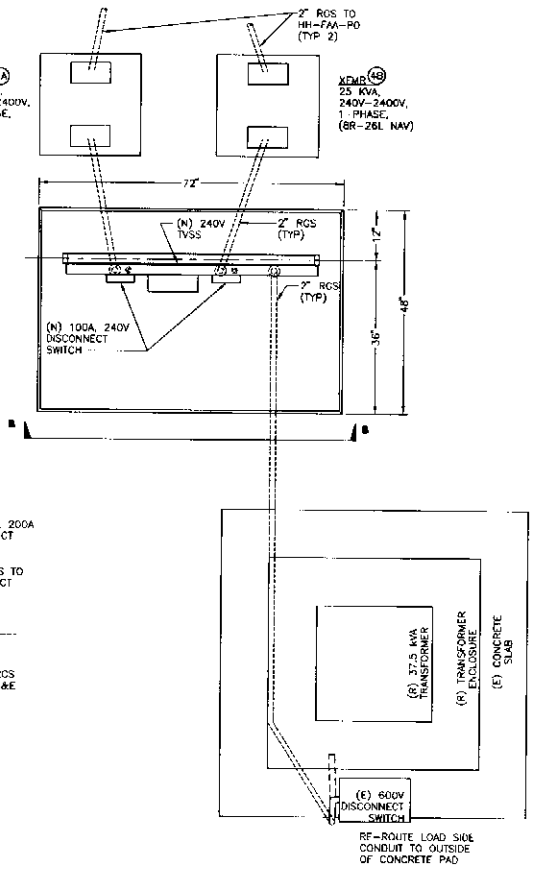

1 RTR & NAVS TRANSFORMER & DISCONNECT DETAILS

SCALE: NO SCALE

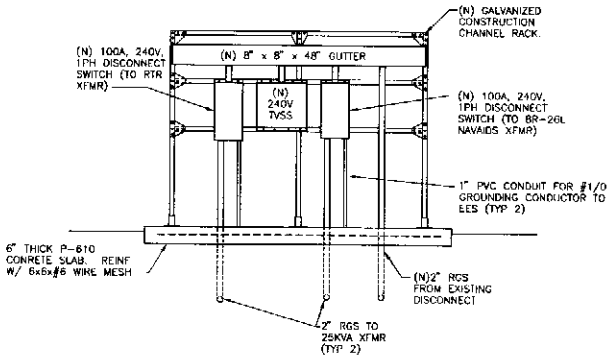

B DISCONNECT AND TVSS ELEVATION

SCALE: NO SCALE

AIP PROJECT NO. 3-48-0077-27-09

REFERENCES - BENCH MARKS

REVISIONS

DATE		BY
5/4/11	1 NAVAIDS SYSTEM INSTALL	EGL

FIRM'S NAME: Kimley-Horn and Associates, Inc.

© 2009 KIMLEY-HORN AND ASSOCIATES, INC.

FIRM'S ADDRESS: 8500 SOUTH PAN AM EXPRESSWAY, SUITE 100, EL PASO, TEXAS 79907 PHONE: 915-544-5530 TEXAS FIRM REGISTRATION NO. F-928

FIRM'S SEAL

SCALE: Horz. 1" = 40'-0" Vert. 1" = 40'-0"

Date: 07/18/10 Designed by: JOVE Drawn by: JOVE Checked by: JOVE Approved by: EGL

PROJECT NAME: EL PASO INTERNATIONAL AIRPORT — RUNWAY 8R-26L AND TAXIWAY L EXTENSION

CITY OF EL PASO

RUNWAY 8R-26L

NAVAIDS TRANSFORMER AND DISCONNECT ASSEMBLY

PROJECT NO. 081348019

FILE NO. 3480108L403

E4.3C

SHEET 101 of 125

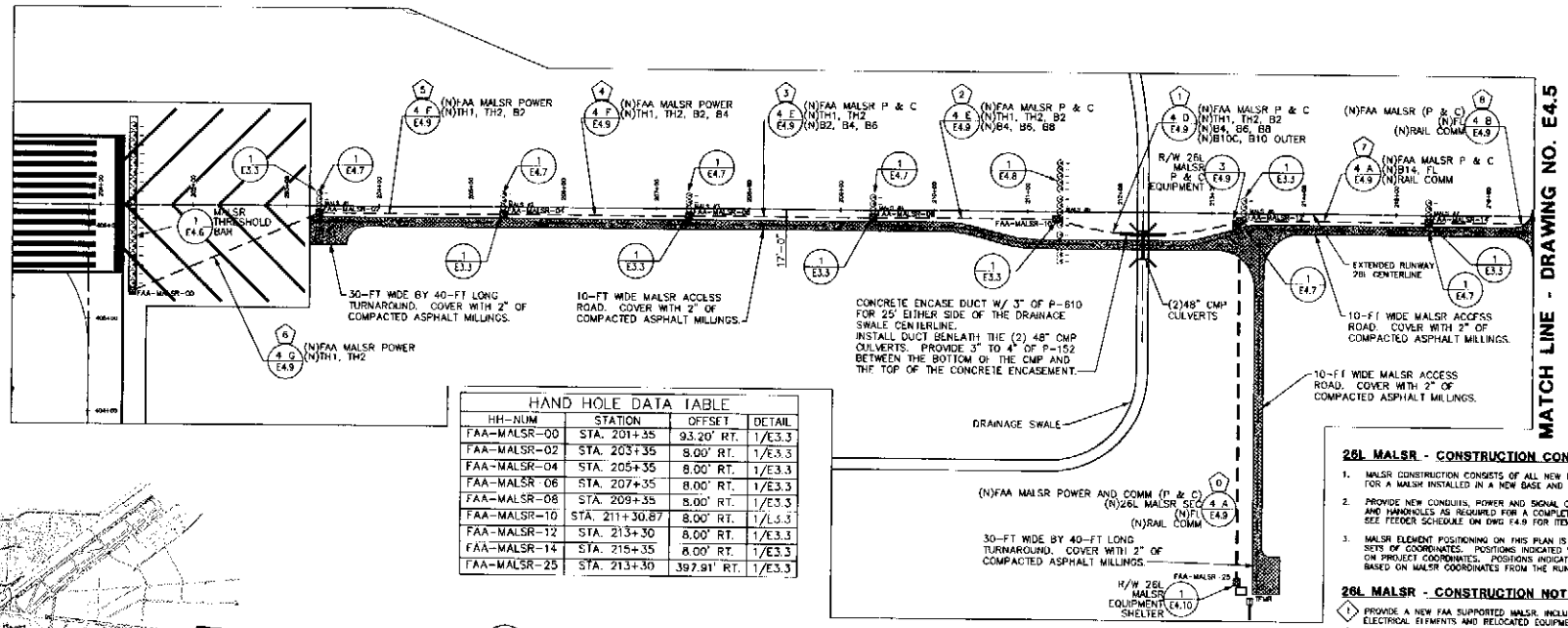

HAND HOLE DATA TABLE			
HH-NUM	STATION	OFFSET	DETAIL
FAA-MALSR-00	STA. 201+35	93.20' RT.	1/E3.3
FAA-MALSR-02	STA. 203+35	8.00' RT.	1/E3.3
FAA-MALSR-04	STA. 205+35	8.00' RT.	1/E3.3
FAA-MALSR-06	STA. 207+35	8.00' RT.	1/E3.3
FAA-MALSR-08	STA. 209+35	8.00' RT.	1/E3.3
FAA-MALSR-10	STA. 211+30.87	8.00' RT.	1/E3.3
FAA-MALSR-12	STA. 213+30	8.00' RT.	1/E3.3
FAA-MALSR-14	STA. 215+35	8.00' RT.	1/E3.3
FAA-MALSR-25	STA. 213+30	397.91' RT.	1/E3.3

1 R/W 26L MALSR - PLAN

SCALE: NOTED

GRAPHIC SCALE IN FEET 60 0 60 120

3" @ FULL SIZE HORIZONTAL

KEYMAP

N.T.S.

26L MALSR - CONSTRUCTION CONDITIONS

1. MALSR CONSTRUCTION CONSISTS OF ALL NEW ELECTRICAL ELEMENTS FOR A MALSR INSTALLED IN A NEW BASE AND CONDUIT SYSTEM.
2. PROVIDE NEW CONDUITS, POWER AND SIGNAL CABLES, PULL BOXES AND HANDHOLES AS REQUIRED FOR A COMPLETE OPERATING SYSTEM. SEE FEEDER SCHEDULE ON DWG E4.9 FOR ITEMS X.
3. MALSR ELEMENT POSITIONING ON THIS PLAN IS INDICATED BY TWO SETS OF COORDINATES. POSITIONS INDICATED WITH "STA" ARE BASED ON PROJECT COORDINATES. POSITIONS INDICATED WITH "MSTA" ARE BASED ON MALSR COORDINATES FROM THE RUNWAY THRESHOLD.

26L MALSR - CONSTRUCTION NOTES

1. PROVIDE A NEW FAA SUPPORTED MALSR, INCLUDING ALL NEW ELECTRICAL ELEMENTS AND RELOCATED EQUIPMENT SHELTER.
2. SEE DRAWING L-5.X FOR NEW SERVICE, TRANSFORMER INSTALLATION AND CABLE REINSTALLATION.
3. THE APPROACH LIGHT PLANE (ALP) FOR THE ENTIRE MALSR FROM MALS BAR 2+00 THROUGH RAIL #5 IS 0.0%.

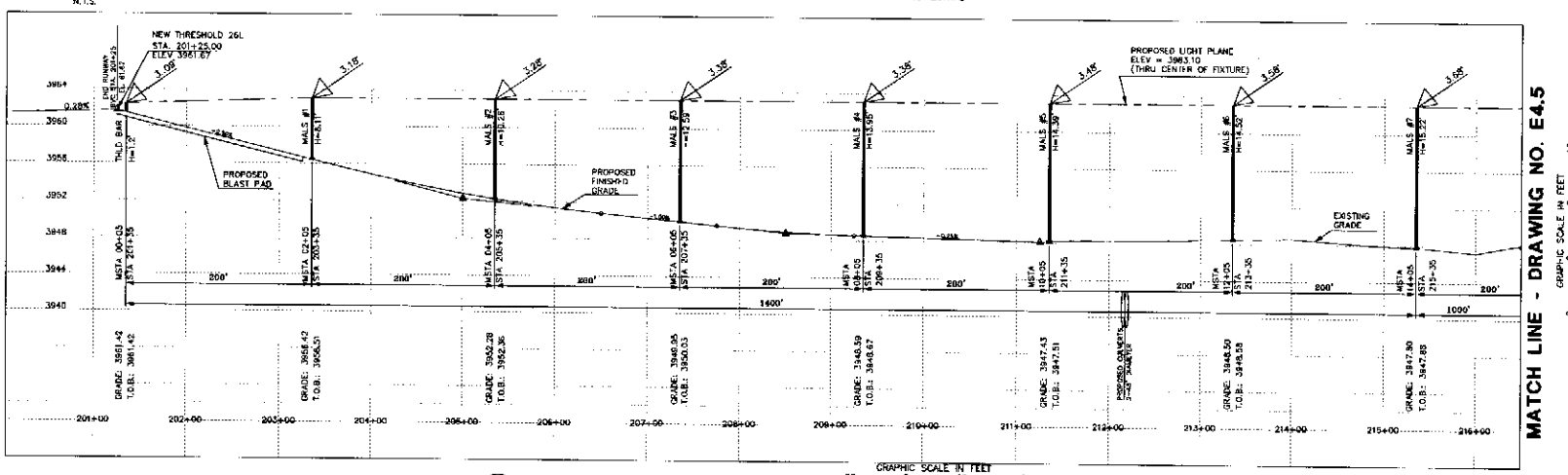

2 R/W 26L MALSR - PROFILE

SCALE: NOTED

GRAPHIC SCALE IN FEET 60 0 60 120

3" @ FULL SIZE HORIZONTAL

AIP PROJECT NO. 3-48-0077-27-09

REFERENCES - BENCH MARKS

DATE	REVISIONS	BY
3/18/11	FAA 26L MALSR REVISED 30%	EJL

FIRM'S NAME: Kimley-Horn and Associates, Inc.

© 2009 KIMLEY-HORN AND ASSOCIATES, INC.
7878 North 16th Street, Suite 300
Phoenix, Arizona 85020 (602) 944-5500
TEXAS FIRM REGISTRATION NO. F-928

FIRM'S SEAL

SCALE: Horiz. 1"=40' Vert. 1"=4.40'

Date 07/18/10
Designed by RKK
Drawn by RKK
Checked by RKK
Approved by EJL

PROJECT NAME: EL PASO INTERNATIONAL AIRPORT
RUNWAY 8R-26L AND TAXIWAY L EXTENSION

CITY OF EL PASO

BASE BID

MALSR PLAN AND PROFILE

PROJECT NO. 081348019

FILE NO. 348018FL404-405

E4.4

SHEET 102 of 125

FAA FURNISHED EQUIPMENT

ALL OTHER EQUIPMENT NEEDED FOR A COMPLETE MALSR INSTALLATION SHALL BE CONTRACTOR FURNISHED

PART NO.	PART DESCRIPTION	QUANTITY
G1-23-0000	MALSR FA TYPE 17900, IAW FAA-E-2325E. FEE DEPOT SUPPORTED	
G1-23-2600	CONTROL CABINET	1
G1-23-2700	INDIVIDUAL CONTROL CABINET	5
G1-23-1300	FLASH HEAD WITH 50 FEET OF CABLE	5
G1-23-1900	JUNCTION BOX	5
G1-23-1400	POWER TRANSFORMER	1
G1 23-1800	PAR 56 LAMP HOLDERS	18
G1 23-1600	PAR 38 LAMP HOLDERS	45
G1-23-1500	FLASHER TESTER	1
AE-C-1391-1	AIMING DEVICE	1
G1-23-0001	SET OF MALSR PRINTER WIRING BOARDS	1
RC-ITSA-M	L854 A/G RADIO WITH ANTENNA	1
MS24489	GREEN FILTER	18
A1-14-0061	300 WATT LAMP	18
A1-14-0060-002	150 WATT SPOT	45

HANDHOLE DATA TABLE			
HH-NUM	STATION	OFFSET	DETAIL
FAA-MALSR-16	STA. 217+35	8.00' RT.	1/E3.3
FAA-MALSR-18	STA. 219+35	8.00' RT.	1/E3.3
FAA-MALSR-20	STA. 221+35	8.00' RT.	1/E3.3
FAA-MALSR-22	STA. 223+35	8.00' RT.	1/E3.3
FAA-MALSR-24	STA. 225+35	8.00' RT.	1/E3.3

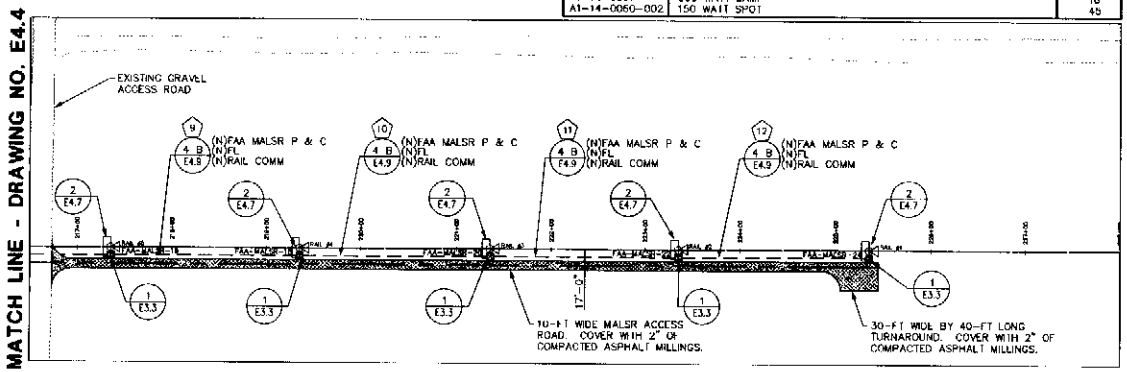

1 R/W 26L MALSR - PLAN

SCALE: NOTED

GRAPHIC SCALE IN FEET 60 0 60 120 — 3" @ FULL SIZE HORIZONTAL

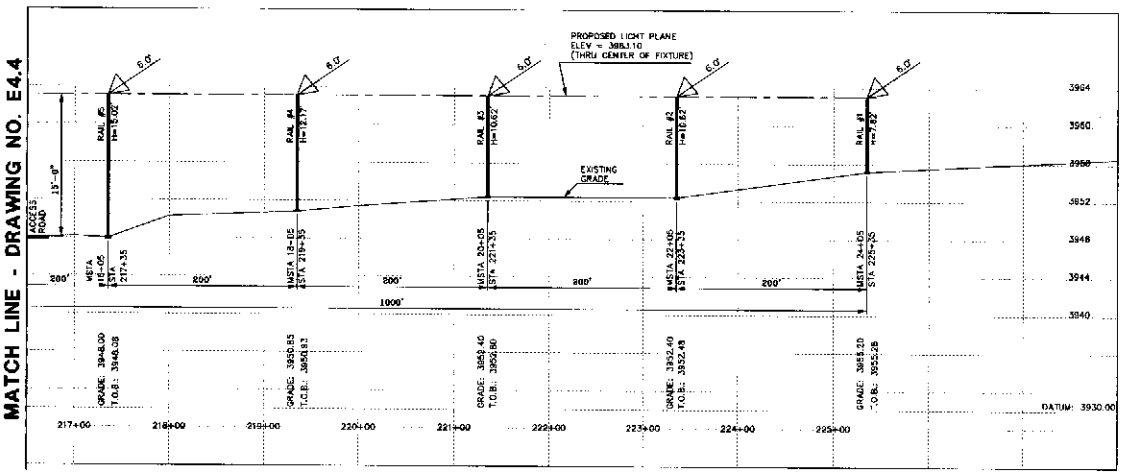

2 R/W 26L MALSR - PROFILE

SCALE: NOTED

GRAPHIC SCALE IN FEET 6 0 6 12 — 3" @ FULL SIZE HORIZONTAL

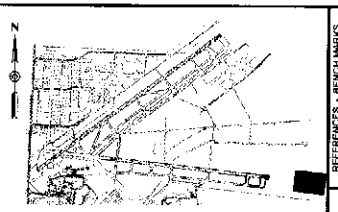

KEYMAP
N.T.S.

SCHEDULE OF REFERENCED FAA 26L MALSR FACILITY STANDARD AND SITE SPECIFIC REFERENCE DRAWINGS

DWG. NO.	DRAWING TITLE
D-6292-1	PLAN AND PROFILE VIEW OF MALSR
D-6292-2	ELECTRICAL DETAILS #1
D-6292-3	ELECTRICAL DETAILS #2
D-6292-4	ELECTRICAL DETAILS #3
D-6292-5	POWER & CONTROL STATION EQUIPMENT MOUNTING DETAILS
D-6292-6	DISTRIBUTION PANEL, TRANSFORMER ASSEMBLY MOUNTING DETAILS
D-6292-7	THRESHOLD LIGHT DETAILS
D-6292-8	SEMI-FLUSH LIGHTS, DETAILS FOR RUNWAY OVERRUN INSTALLATION
D-6292-9	UP TO 6'-0" MOUNTING HEIGHT FRANGIBLE LIGHT BAR
D-6292-10	MG-20 & MG-30 ELECTRICAL EQUIPMENT LAYOUT
D-6292-11	UP TO 40' 0" MOUNTING HEIGHT UNDERGROUND CONDUIT SYSTEM
D-6292-12	UP TO 40'-0" MOUNTING HEIGHT MISCELLANEOUS DETAILS
D-6292-13	40'-0" TO 128' 0" MOUNTING HEIGHT LIR WIRING
D-6292-14	LOW IMPACT RESISTANT MG STRUCTURE CONFIGURATION
D-6292-15	LOW IMPACT RESISTANT MG STRUCTURE FOUNDATION DETAIL
D-6292-16	LOW IMPACT RESISTANT MG STRUCTURE RAISING AND LOWERING
D-6292-17	LOW IMPACT RESISTANT MG STRUCTURE STATION LAYOUT
D-6292-18	LINK CONTROL UNIT, RF LINK INSTALLATION DETAILS
D-6292-19	OPTIONAL MALSR CONCRETE SHELTER REQUIREMENTS
D-6292-20	OPTIONAL MALSR FIBERGLASS SHELTER REQUIREMENTS
D-6292-21	OPTIONAL SHELTER REQUIREMENTS, ANTENNA INSTALLATION
D-6292 22	OPTIONAL SHELTER REQUIREMENTS
D-6292-23	OPTIONAL HANDHOLE AND TRENCH DETAILS
D-6155-1	LIR STRUCTURE CONFIGURATIONS
D-6155-2	TEE, TEE BAR & TUBE CAP ASSEMBLIES
D-6155-3	TEE BRACE ASSEMBLY, TEE BRACE CLAMP ASSEMBLY & DETAILS
D-6155-5	STABILIZER ROD ASSEMBLY & DETAILS
D-6155-6	LIR TUBES AND TUBE SPLICE
D-6155-7	DETAILS FOR TUBE "A", "B" & TUBE SPLICE
D-6155-8	MAST LIFTING FRAME SUB ASSEMBLY
D-6155-9	MAST LIFTING FRAME ASSEMBLY
D-6155-13	MOUNTING STAND ASSEMBLY
D-6155-14	MOUNTING STAND DETAILS
D-6155-15	MOUNTING FRAME ASSEMBLY AND DETAILS
D-6155-19	FOUNDATIONS FOR LIR STRUCTURES MG-20, MG-30 & MG-40
D-6155-20	RAISING & LOWERING OF LIR STRUCTURES MG-20, MG-30 & MG-40
D 6155-21	ASSEMBLY INSTRUCTIONS FOR LIR STRUCTURES MG-20, MG-30 & MG-40
D-6086-3	LOW-IMPACT RESISTANCE ASSEMBLY
D-6086-4	LOW-IMPACT RESISTANCE TUBE DETAILS
D-6086-5	MALS AND RAIL LAMP SUPPORT DETAILS
D-6086-6	MALS T-BAR DETAILS
D-6086-7	LOW-IMPACT RESISTANCE TUBE CLAMP DETAILS
D-6086-8	LIFTING FRAME DETAILS

STANDARD DRAWING NOTE:
THE ABOVE LIST IS INTENDED TO PROVIDE ADDITIONAL GENERAL DETAILS FOR THE MALSR FACILITY. REFER TO DRAWINGS E4.4-4.12 FOR SITE SPECIFIC DETAILS. A CD WITH THESE DRAWINGS AND OTHER FAA REFERENCE STANDARDS, SPECIFICATIONS AND ORDERS IS AVAILABLE FROM THE ENGINEER UPON REQUEST.

AIP PROJECT NO. 3-48-0077-97-09

REFERENCES - BENCH MARKS

DATE	REVISIONS	BY
8/16/11	FAA RIL MAJOR REVISIONS (PRELIMINARY)	SCL

FIRM'S NAME: Kimley-Horn and Associates, Inc.

7800 North Mesa Street, Suite 300
El Paso, Texas 79912 (915) 584-3200

© 2008 KIMLEY-HORN AND ASSOCIATES, INC.

TEXAS FIRM REGISTRATION NO. F-928

FIRM'S SEAL

SCALE: HORIZ. 1"=400' VERT. 1"=5' 400'

Date 07/01/10 Designed by JXR Drawn by JXR Checked by DYE Approved by EAL

PROJECT NAME: EL PASO INTERNATIONAL AIRPORT
RUNWAY 8R-26L AND TAXIWAY L EXTENSION

CITY OF EL PASO

RUNWAY 8R-26L

MALSR PLAN AND PROFILE

PROJECT NO. 0615480016

FILE NO. 34001PEL404-406

E4.5

SHEET 103 of 125

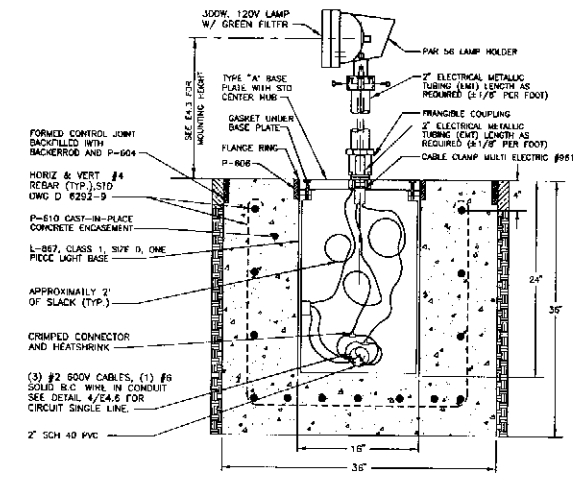

2 26L MALSR THRESHOLD LIGHT BAR SECTION

SCALE: NTS

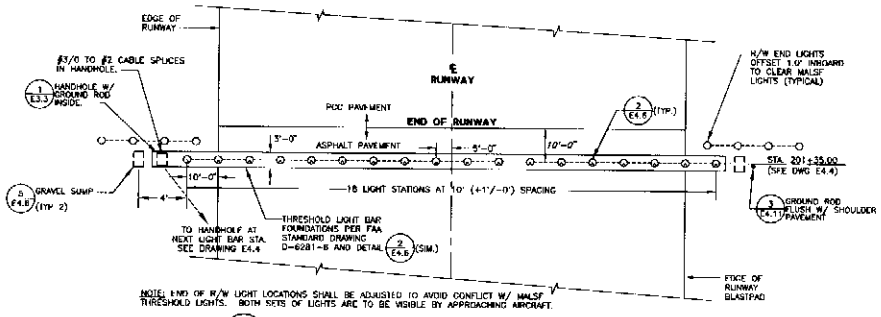

NOTE: END OF R/W LIGHT LOCATIONS SHALL BE ADJUSTED TO AVOID CONFLICT W/ MALSR THRESHOLD LIGHTS. BOTH SETS OF LIGHTS ARE TO BE VISIBLE BY APPROACHING AIRCRAFT.

1 MALSR THRESHOLD LIGHT BAR PLAN

SCALE: NTS

SHEET NOTES:

1. ALL LAMP BASES (CANS) ARE GROUNDED AS SHOWN IN DETAIL. THE GROUND WIRE SHALL BE RUN THROUGH AND GROUNDED AT EACH BASE CAN.
2. THE CONTRACTOR SHALL PROVIDE 3/8-16 x 1-1/4" LONG GALVANIZED STEEL BOLTS AND SPLIT LOCKWASHERS FOR BOLTING MOUNTING RING TO SPLICE CAN.
3. FILL SPACE WITH SEALING COMPOUND P-606 FOR CONCRETE PAVEMENT. PROVIDE CERTIFICATION THAT SEALER IS COMPATABLE WITH PAVEMENT TYPE.
4. THE POWER CABLES SHALL ALTERNATE BETWEEN THE LIGHT STATIONS WITH THE BYPASS CABLES BEING CONTINUOUS. WHERE SPLICES ARE REQUIRED THE CONDUCTORS SHALL BE JOINED WITH COMPRESSION SOLDERLESS WIRE CONNECTORS, SEALED AND INSULATED WITH UL APPROVED CAST SPLICE KITS. SPLICES SHALL BE ALLOWED ON WITH PRIOR WRITTEN APPROVAL FROM THE FAA.
5. COUPLING THREADS TO BE CLEANED AND COATED WITH SILICONE ANTI-SIEZE COMPOUND.
6. LEAVE 2 FEET SLACK IN EACH CABLE AT EACH LIGHT BAR, BASE CAN & HANDHOLE.
7. PROVIDE EACH THRESHOLD LIGHT FIXTURE WITH A #12 AWG, STRANDED GREEN INSULATED GROUND CONDUCTOR.
8. DRILL A HOLE IN THE BASE PLATE AND CABLE CLAMP AND INSTALL THE GREEN GROUND FROM THE GROUND LUG IN THE LIGHT BASE TO THE GROUND CONNECTION IN THE LAMP HOLDER PROVIDE MALE/FEMALE CRIMP-ON CONNECTOR WITHIN THE CABLE CLAMP TO ALLOW THE GROUND TO BE DISCONNECTED. INSTALL PER DETAIL "A" ON STANDARD DRAWING D-6292-7.

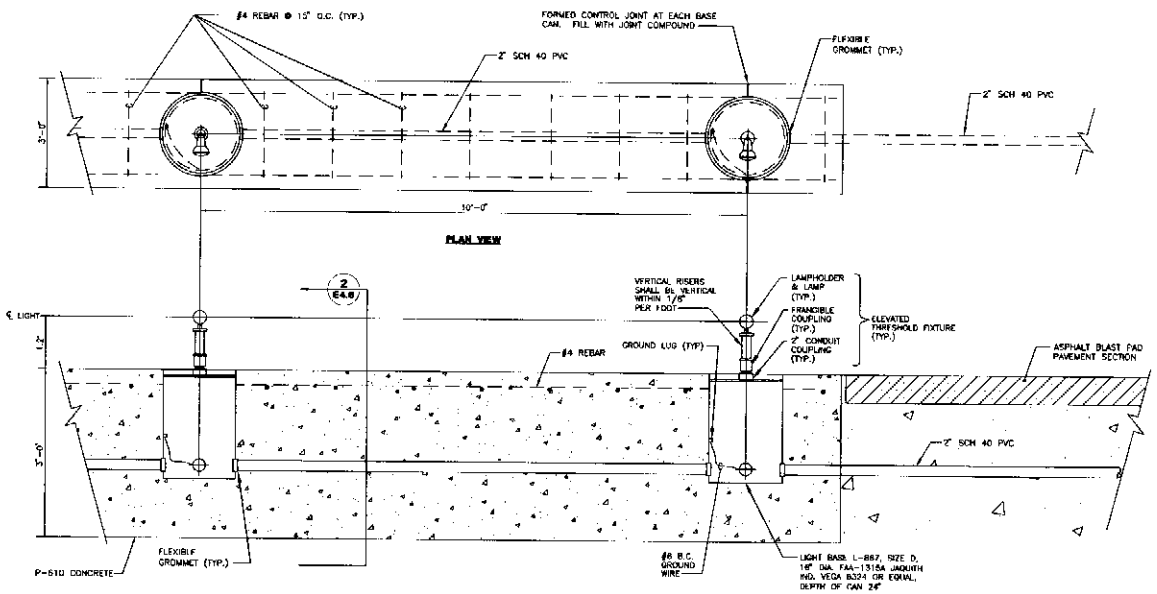

3 26L MALSR THRESHOLD BAR PLAN AND PROFILE

SCALE: NTS

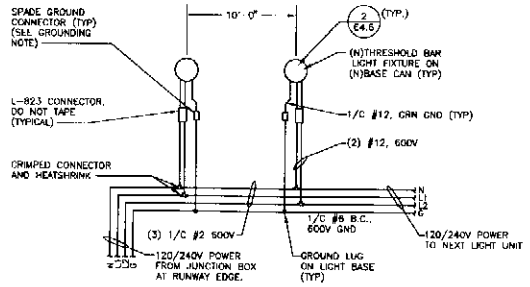

GROUNDING NOTE:
INSTALL THE GREEN GROUND FROM THE GROUND LUG ON THE LIGHT FIXTURE TO THE GROUND CONNECTION. PROVIDE MALE/FEMALE CRIMP-ON CONNECTOR WITHIN THE CABLE CLAMP TO ALLOW THE GROUND TO BE DISCONNECTED.

4 SINGLE LINE - THRESHOLD BAR LIGHTS

SCALE: NTS

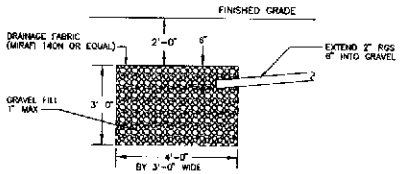

5 GRAVEL SUMP DETAIL

SCALE: NTS

ALL MALSR EQUIPMENT TO BE PROVIDED BY OWNER

1-800-DIG-TESS

AIP PROJECT NO. 3-48-0077-27-09

REFERENCES - BENCH MARKS

DATE	REVISIONS	BY
6/16/11	1 ADDED GROUND WIRE DETAIL	ECL

FIRM'S NAME: Kimley-Horn and Associates, Inc.
© 2010 KIMLEY-HORN AND ASSOCIATES, INC.
8640 GUAR, SUITE 100, EL PASO, TX 79907
PHONE: (915)565-9000 FAX: (915) 544-3500
TEXAS FIRM REGISTRATION NO. F-928

FIRM'S SEAL

SCALE: Horiz. 1"=40' Vert. 1"=400'

Date: 07/13/10 Designed by: JCO Drawn by: JCO Checked by: DYE Approved by: ECL

PROJECT NAME: EL PASO INTERNATIONAL AIRPORT
RUNWAY 8R-26L AND TAXIWAY L EXTENSION

CITY OF EL PASO

RUNWAY 8R-26L

MALSR R/W 26L THRESHOLD DETAILS

PROJECT NO. 051348019

FILE NO. 348019EL408

E4.6

SHEET 104 of 125

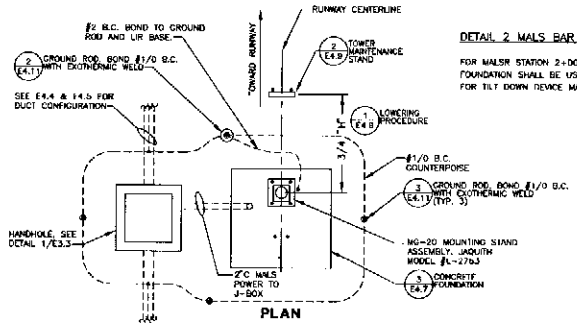

PLAN

DETAIL 2 MALS BAR NOTE:

FOR MALSR STATION 2+00 THE SAME FOUNDATION SHALL BE USED BUT BOLTS FOR TILT DOWN DEVICE MAY BE OMITTED.

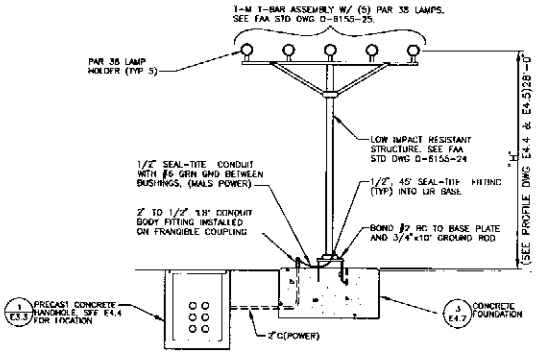

TRANSVERSE ELEVATION

1 STA 2+00 THRU 8+00, 12+00, & 14+00 - MALS TOWER PLAN & TRANSVERSE ELEVATION

SCALE: NTS

TOWER ASSEMBLY EQUIPMENT

JAQUITH PART NO.	PART DESCRIPTION	REMARKS
L 9154	T-M TEE BAR ASSEMBLY	MALSR: 5 LIGHTS @ 30" SPACING
L 7557	TUBE CAP ASSEMBLY	
L 9153	TEE BRACE ASSEMBLY	TWO REQUIRED PER T-M
L 9152	TEE BRACE CLAMP ASSEMBLY	
L 9135	TUBE "A" X 20 FT	
L 7763	MOUNTING STAND ASSEMBLY	
L 5000	T-1 W/ JCT BOX	FOR FLASHING LIGHTS ONLY
L 5002	ANCHOR BOLT SET FOR MG-20	
L 5004	ANCHOR PLATE	
L 5023	FRANGIBLE ANCHOR	FOR TOWERS INSIDE THE RSA
L 5005	TILT DEVICE	ONE SUPPLIED FOR ALL TOWERS

CONTRACTOR FURNISHED THIS LIST IS NOT INTENDED TO ENCOMPASS ALL MATERIALS NEED FOR A TOWER ASSEMBLY BUT RATHER HIGHLIGHT MAJOR COMPONENTS

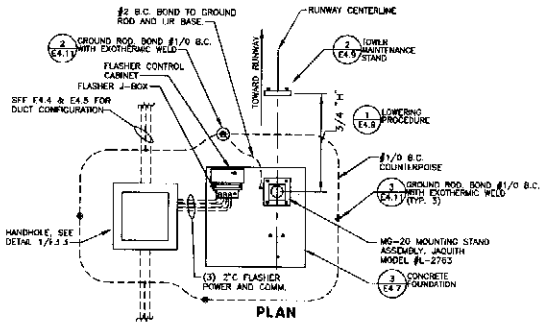

PLAN

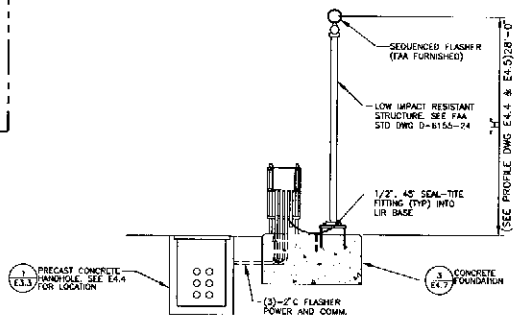

TRANSVERSE ELEVATION

2 STA 16+00 THUR 24+00 - RAIL FLASHER TOWER PLAN & TRANSVERSE ELEVATION

SCALE: NTS

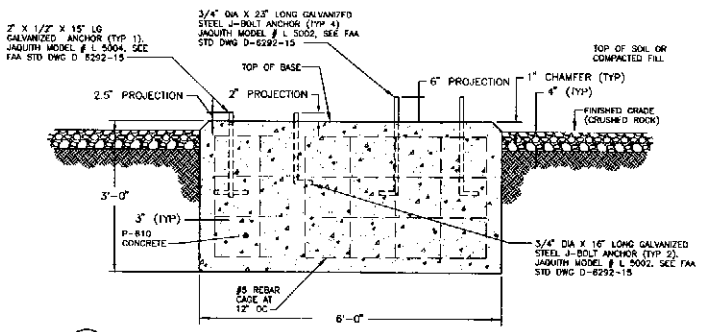

3 MG-20 TOWER FOUNDATION TRANVERSE SECTION

SCALE: NTS (10'-0" AND SHORTER)

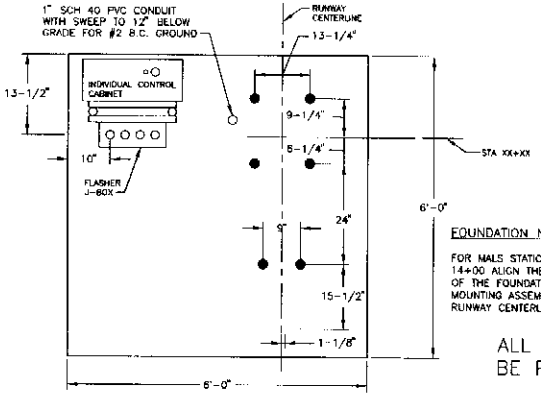

FOUNDATION NOTE:

FOR MALS STATION 2+00 TO 14+00 ALIGN THE CENTER OF THE FOUNDATION AND MOUNTING ASSEMBLY WITH RUNWAY CENTERLINE.

ALL MALSR EQUIPMENT TO BE PROVIDED BY OWNER

4 MG-20 TOWER FOUNDATION PLAN

SCALE: NTS (10'-0" AND SHORTER)

1-800-DIG-TESS

AIP PROJECT NO. 3-48-0077-27-09

REFERENCES - BENCH MARKS

DATE	REVISIONS	BY
9/18/11	1 FAA REVIEWER REVIEW COMMENTS	ECL

FIRM'S NAME: Kimley-Horn and Associates, Inc.

Corpus Christi, Houston and Laredo, Texas
7800 North Mopac Expwy, Suite 200
Austin, Texas 78731 (512) 418-1771
TEXAS FIRM REGISTRATION NO. F-928

FIRM'S SEAL

SCALE: Horiz. 1" = 40' Vert. 1" = 40'

Date 07/19/09
Designed by XXX
Drawn by XXX
Checked by DYW
Approved by ECL

PROJECT NAME: EL PASO INTERNATIONAL AIRPORT
RUNWAY 8R-26L AND TAXIWAY L EXTENSION

CITY OF EL PASO

RUNWAY 8R-26L

MALSR LIGHT BAR DETAILS

PROJECT NO. 091J48019

FILE NO. 34901BEL407

E4.7

SHEET 105 of 125

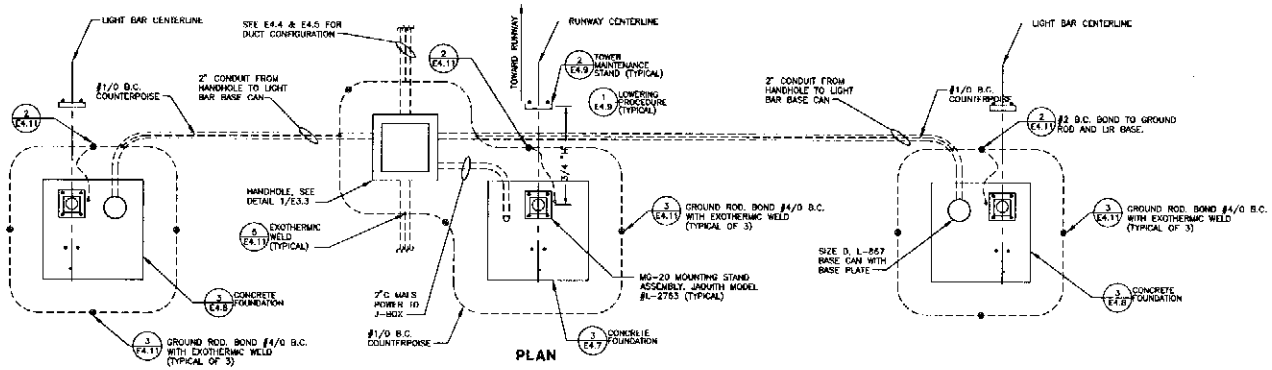

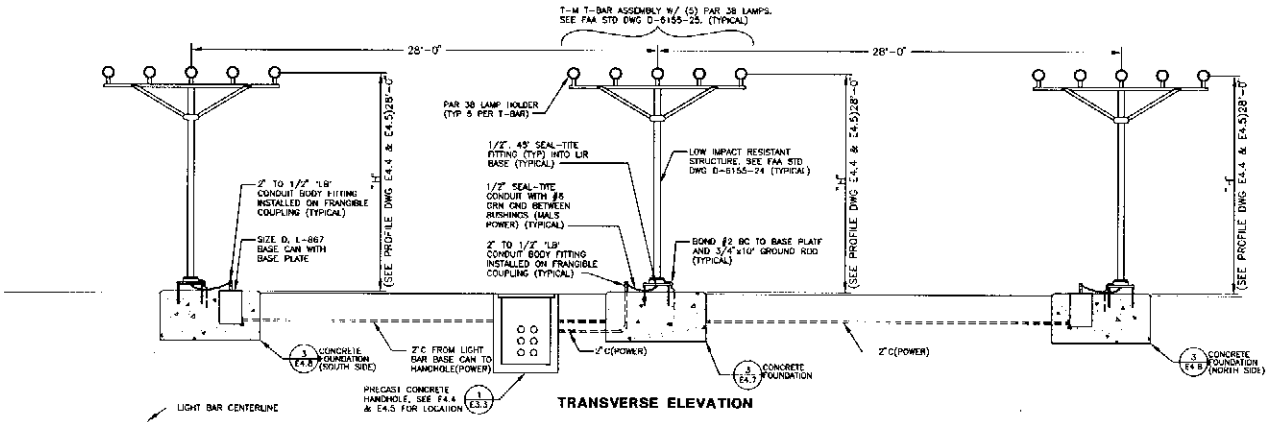

1 MALSR TOWER PLAN & TRANSVERSE ELEVATION - STA 10+00

SCALE: NTS

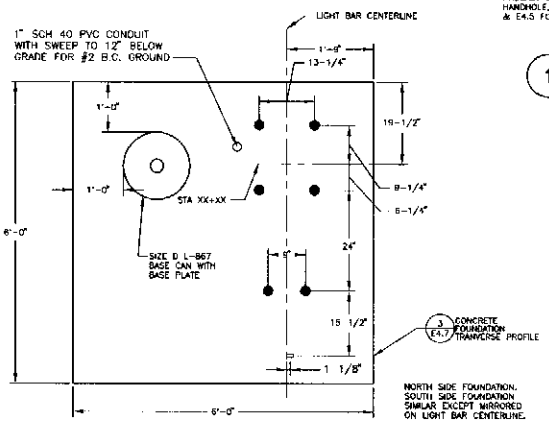

2 MG-20 TOWER FOUNDATION PLAN

SCALE: NTS (10'-0" AND SHORTER)

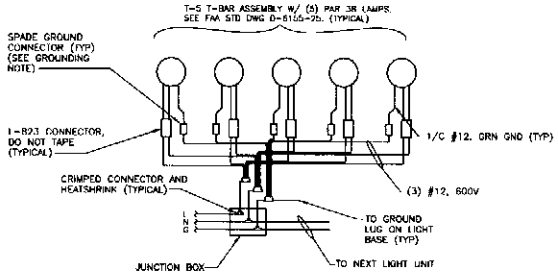

3 SINGLE LINE - TYPICAL LIGHT BAR

SCALE: NTS

ALL MALSR EQUIPMENT TO BE PROVIDED BY OWNER

1-800-DIG-TESS

AIP PROJECT NO. 3-48-0077-27-09

REFERENCES - BENCH MARKS

DATE	REVISIONS	BY
5/18/11	1 P.A.R. RELEASE (NOW (WAS))	ECL

FIRM'S NAME: Kimley-Horn and Associates, Inc.

TEXAS F-928

FIRM'S SEAL

SCALE: Horiz. 1"=40' Vert. 1"=40'

Date: 07/11 Designed by: AKK Drawn by: AKK Checked by: DYE Approved by: ECL

PROJECT NAME: EL PASO INTERNATIONAL AIRPORT RUNWAY 8R-26L AND TAXIWAY L EXTENSION

CITY OF EL PASO

RUNWAY 8R-26L

MALSR ELEVATED LIGHT BAR DETAILS

PROJECT NO. 091348919

FILE NO. 34801EL406

E4.8

SHEET 106 of 125

R/W 26L MALSR FEEDER SCHEDULE (REFERENCE FROM DWGS E4.4 & E4.6)

SYMBOL	CONDUIT	1/C#4/0	1/C#3/0	1/C#2	1/C#4	1/C#6	#6 GND	12-PAIR	STA	REMARKS
0	SEE E4.4 & E4.5	3	–	–	–	–	1	1	–	(N)HH FAA-MALSR-25 TO (N)HH FAA-MALSR-12, NOTE 1
1	SEE E4.4 & E4.5	–	3	–	2	2+2+2	1	1	BAR #10	
2	SEE E4.4 & E4.5	–	3	–	2+2	2+2	1	–	BAR #8	
3	SEE E4.4 & E4.5	–	3	–	2+2	2	1	–	BAR #6	
4	SEE E4.4 & E4.5	–	3	–	2+2	–	1	–	BAR #4	
5	SEE E4.4 & E4.5	–	3	–	2	–	1	–	BAR #2	
6	SEE E4.4 & E4.5	–	3	–	–	–	1	–	THRESHOLD BAR	NOTE 2
7	SEE E4.4 & E4.5		–	–	2	2	1	1	BAR #14	
8	SEE E4.4 & E4.5	–	–	–	2	–	1	1	RAIL #5	
9	SEE E4.4 & E4.5	–	–	–	2	–	1	1	RAIL #4	
10	SEE E4.4 & E4.5	–	–	–	2	–	1	1	RAIL #3	
11	SEE E4.4 & E4.5	–	–	–	2	–	1	1	RAIL #2	
12	SEE E4.4 & E4.5	–	–		2	–	1	1	RAIL #1	
13	(N)2" ENCASED	–	–	4	–	–	1	–	THRESHOLD BAR	NOTES 2 & 3. NO CIRCUIT TAG ON DRAWING.
14	SEE E4.7	–	–		–	2	1	–	BAR #12	NOTE 4. NO CIRCUIT TAG ON DRAWING.

NOTES:

1. SEE RUNWAY 26L MALSR SHELTER LAYOUT PLAN, E4.11.
2. UNDER NEW RUNWAY OR TAXIWAY PAVEMENT; CONCRETE ENCASE DUCT TO 36" BEYOND EDGES OF SHOULDERS.
3. THRESHOLD POWER: FOR EACH CIRCUIT, SPLICE (N)(4) #3/0 TO (N)(4) #6 IN HH FAA MALSR DO. DRAWING E4.8.
4. SEE E4.7, DETAIL 1 AND E4.9, DETAIL 3.

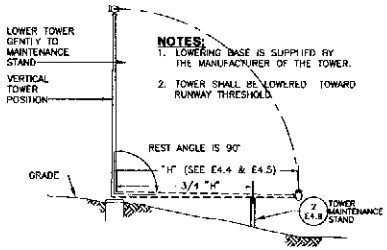

1 TOWER LOWERING DETAIL

SCALE: NTS

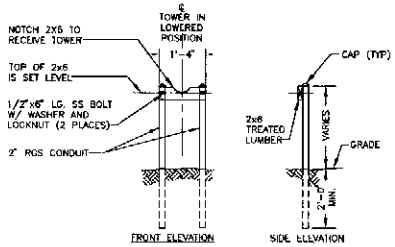

2 SINGLE TOWER MAINTENANCE STAND

SCALE: NTS

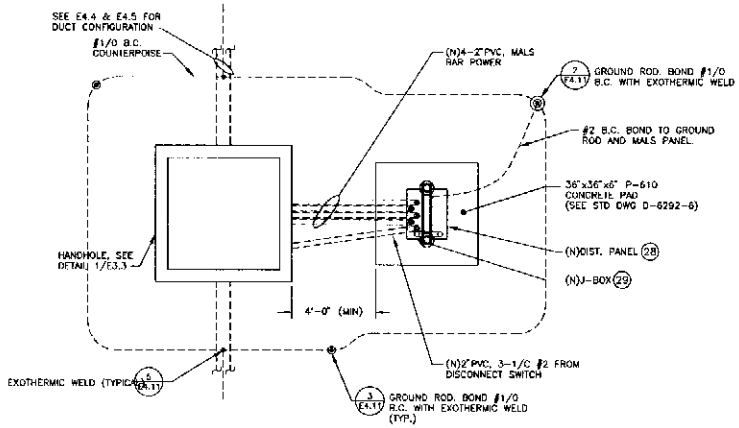

NOTES:

REFER TO FAA STANDARD DRAWING D-6292-6 FOR ADDITIONAL DETAILS AND NUMBERED [XX] EQUIPMENT.

3 26L MALSR DISTRIBUTION ASSEMBLY SITE PLAN

NTS

CONDUIT/DUCT & CABLE INSTALLATION NOTES:

1. SEE PLANS FOR REQUIRED DUCT SECTIONS. ALL OF THE SECTIONS SHOWN ON THIS DRAWING MAY NOT BE USED ON THIS PROJECT.
2. PROVIDE PULL WIRES IN ALL (NEW) UNUSED CONDUITS. PLUG CONDUIT ENDS IN HANDHOLES OR MANHOLES.
3. WARNING TAPE REQUIRED IN ALL AREAS. WHERE IN CONFLICT WITH THE COUNTERPOISE, INSTALL THE TAPE DIRECTLY ABOVE THE COUNTERPOISE.
4. INSTALL A #1/0 BARE COPPER (BC) GROUND CONDUCTOR 12" FROM TOP OF HIGHEST CONDUIT IN EACH DUCT ASSEMBLY FROM HANDHOLE/MANHOLE TO HANDHOLE/MANHOLE AND EXOTHERMICALLY WELD TO GROUND RODS AT EACH HANDHOLE OR MANHOLE.
5. INSTALL LIGHTING SERIES CIRCUITS AS FOLLOWS:
   ONE CIRCUIT (1 OR 2 CONDUCTORS) PER 2"C. LIMIT 4"C TO NO MORE THAN (8) CONDUCTORS.
   START INSTALLATION IN BOTTOM CONDUITS OF DUCT ARRAY, LEAVING THE UPPER CONDUITS EMPTY.
6. REFER TO SPECIFICATION ITEM L-110 FOR CONDUIT/DUCT SPACER SYSTEM.

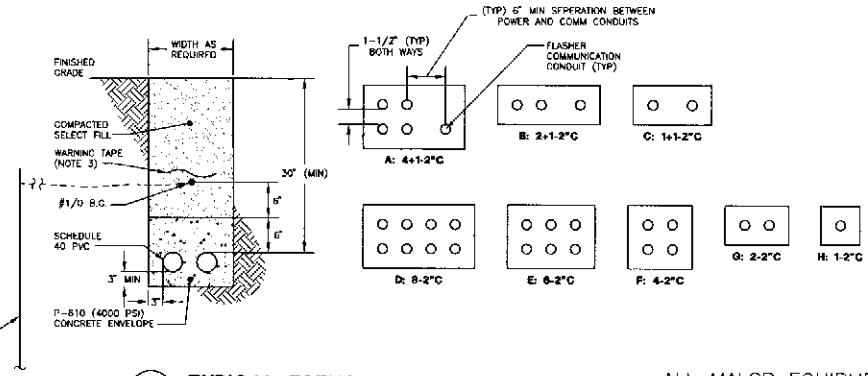

4 TYPICAL TRENCH SECTION - ENCASED

SCALE: NTS (SEE NOTE AT RIGHT)

ALL MALSR EQUIPMENT TO BE PROVIDED BY OWNER

AIP PROJECT NO. 3-48-0077-27-09

REFERENCES - BENCHMARKS

DATE	REVISIONS	BY
9/18/-	1 FAA 26L MALSR (MSV DWG)	ECL

FIRM'S NAME: Kimley-Horn and Associates, Inc. © 2009 KIMLEY-HORN AND ASSOCIATES, INC. 7878 North 16th Street, Suite 300, Phoenix, Arizona 85020 (602) 944-5500 TEXAS FIRM REGISTRATION NO. F-928

FIRM'S SEAL

SCALE: Horz. 1" = 40' Vert. 1" = 40'

Date 07/19/10 Designed by XXX Drawn by XXX Checked by DVE Approved by ECL

PROJECT NAME: EL PASO INTERNATIONAL AIRPORT
RUNWAY 8R-26L AND TAXIWAY L EXTENSION

CITY OF EL PASO

RUNWAY 8R-26L

MALSR EQUIPMENT DETAILS

PROJECT NO. 091348019

FILE NO. 348015EL409

E4.9

SHEET 107 of 125

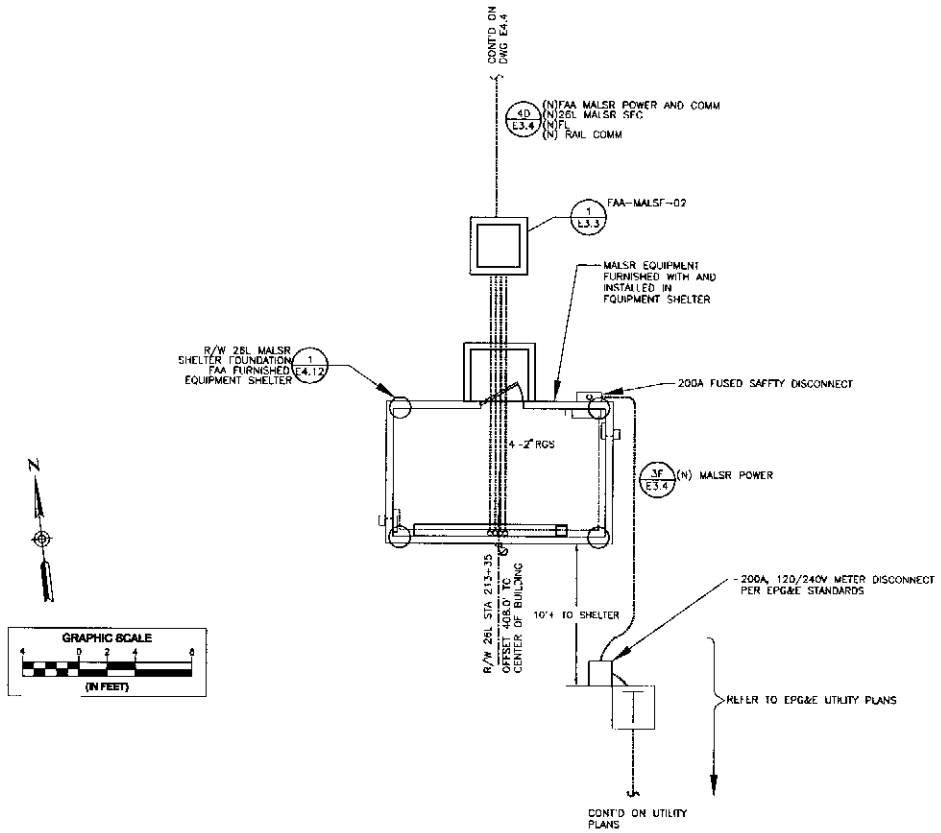

1 R/W 26L MALSR EQUIPMENT SHELTER SITE PLAN

REFERENCES - BENCH MARKS

DATE	REVISIONS	BY
5/14/11	1 FAA 26L MALSR (NEW DWG)	ECL

FIRM'S NAME

Kimley-Horn and Associates, Inc.

TEXAS FIRM REGISTRATION NO. F-928

FIRM'S SEAL

SCALE

Horiz. 1" = 400'
Vert. 1" = 400'
Date 07/14/10
Designed by XXX
Drawn by XXX
Checked by DYE
Approved by ECL

PROJECT NAME

EL PASO INTERNATIONAL AIRPORT

RUNWAY 8R-26L AND TAXIWAY L EXTENSION

CITY OF EL PASO

RUNWAY 8R-26L

MALSR EQUIPMENT SHELTER PLAN

PROJECT NO. 091348010

FILE NO. 348019EL410.412

E4.10

SHEET 108 of 125

1-800-DIG-TESS

AIP PROJECT NO. 3-48-0077-27-09

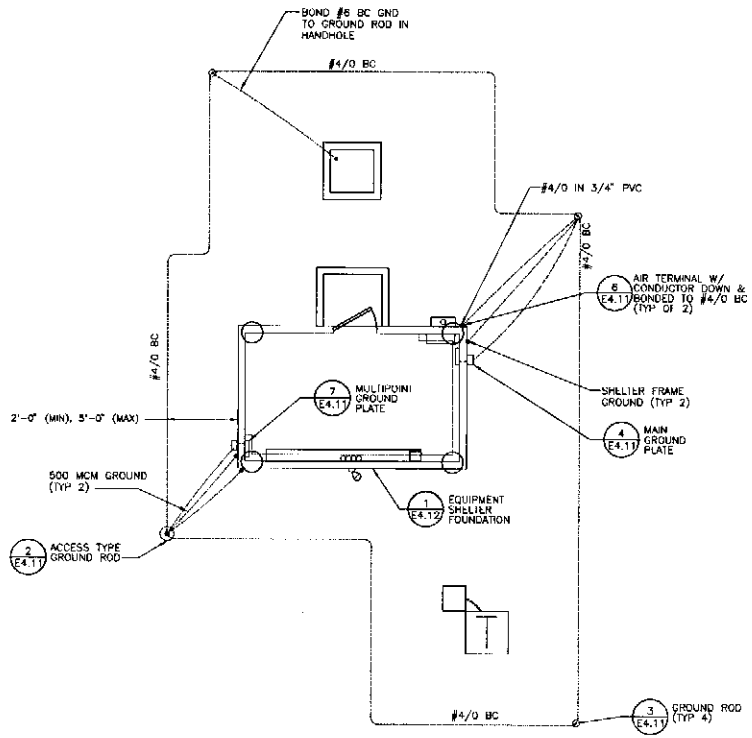

1 TYPICAL SHELTER GROUNDING PLAN
SCALE: NTS

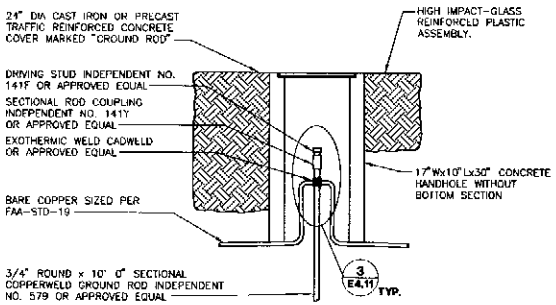

2 GROUND ROD STATION DETAILS
SCALE: NTS

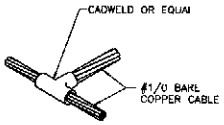

5 COUNTERPOISE SYS. GROUND DETAIL
SCALE: NTS

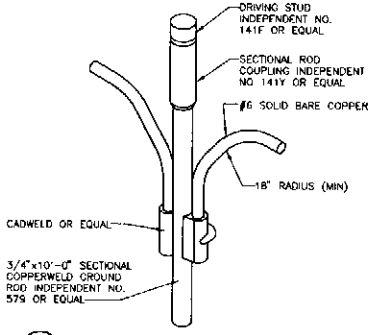

3 GROUND ROD DETAIL
SCALE: NTS

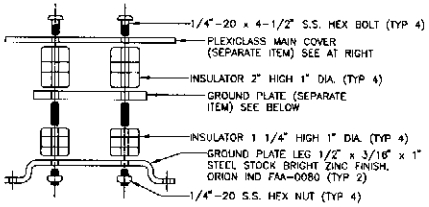

MAIN GROUND BRACKET ASSEMBLY

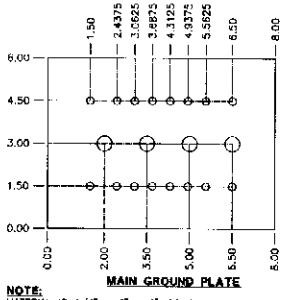

MAIN GROUND PLATE

NOTE:
MATERIAL IS 1/4" x 6" x 8" COPPER BAR STOCK

4 MAIN GROUND PLATE DETAILS
SCALE: NTS

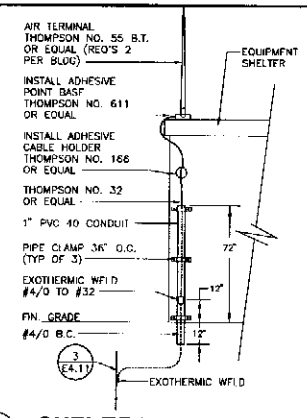

6 SHELTER AIR TERMINAL DET
SCALE: NTS

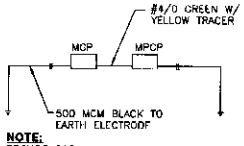

NOTE:
PROVIDE BOTH A MAIN GROUND PLATE AND A MULTIPOINT GROUND PLATE IN EACH NEW EQUIPMENT SHELTER.

7 GROUND SYSTEM SCHEMATIC
SCALE: NTS

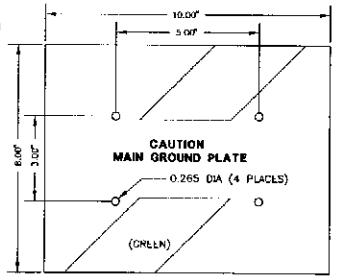

MAIN COVER

NOTES:
1. MATERIAL 3/16" PLEXIGLASS, CLEAR.
2. REMOVE SHARP EDGES/CORNERS.
3. LETTERING IS 3/8" (10 MM) BLACK HIGH/LOW.

1-800-DIG-TESS

AIP PROJECT NO. 3-48-0077-27-09

REFERENCES - BENCHMARKS

DATE	REVISIONS	BY
9/19/11	1 ADDED NOTE 3 (SEW, TMC)	EEL

FIRMS NAME: Kimley-Horn and Associates, Inc.
6720 N. Scottsdale Road, Suite 160, Scottsdale, AZ 85253
Phone: (480) 607-3700 Fax: (480) 607-3700
Phoenix, Arizona 85020 (602) 944-5500
TEXAS FIRM REGISTRATION NO. F-928

FIRMS SEAL

SCALE: Horiz. 1" = 0'-0" Vert. 1" = 0'-0"
Date: 07/15/11
Designed by: XXX
Drawn by: XXX
Checked by: DVE
Approved by: EEL

PROJECT NAME
EL PASO INTERNATIONAL AIRPORT
RUNWAY 8R-26L AND TAXIWAY L EXTENSION

CITY OF EL PASO

RUNWAY 8R-26L

MALSR GROUNDING DETAILS

PROJECT NO. 091348919

FILE NO. 348010FI 410-412

E4.11

SHEET 109 of 126

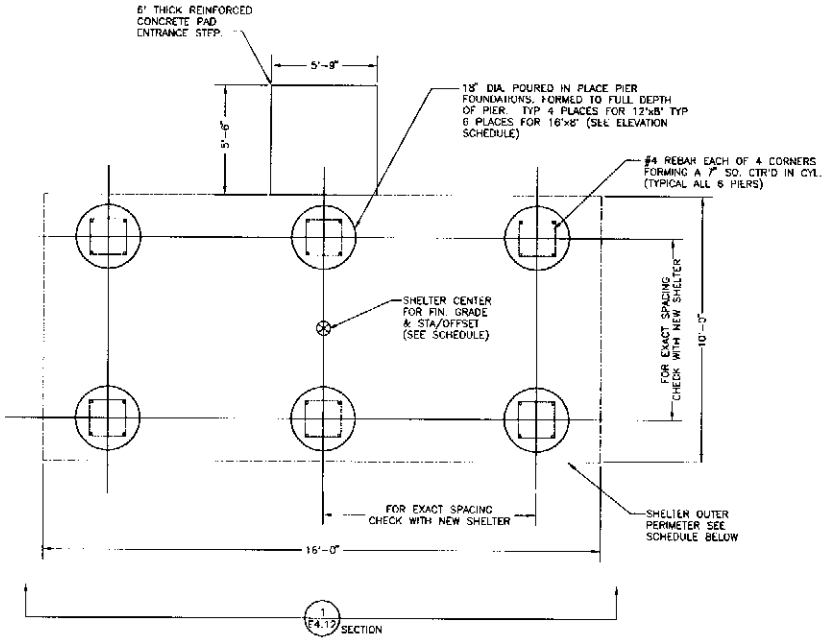

PLAN

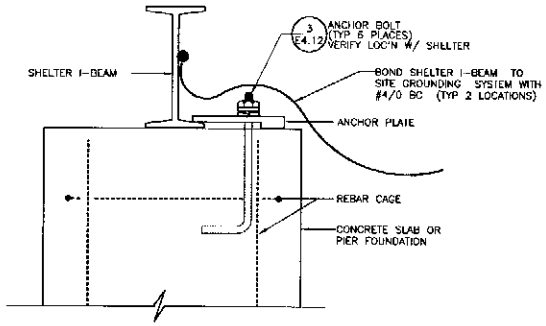

2 SHELTER ANCHOR DETAIL (TYP 4 OR 6 PLACES)

NO SCALE

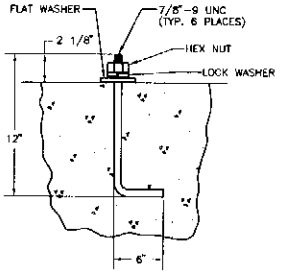

3 TYPICAL ANCHOR BOLT DETAIL

NO SCALE

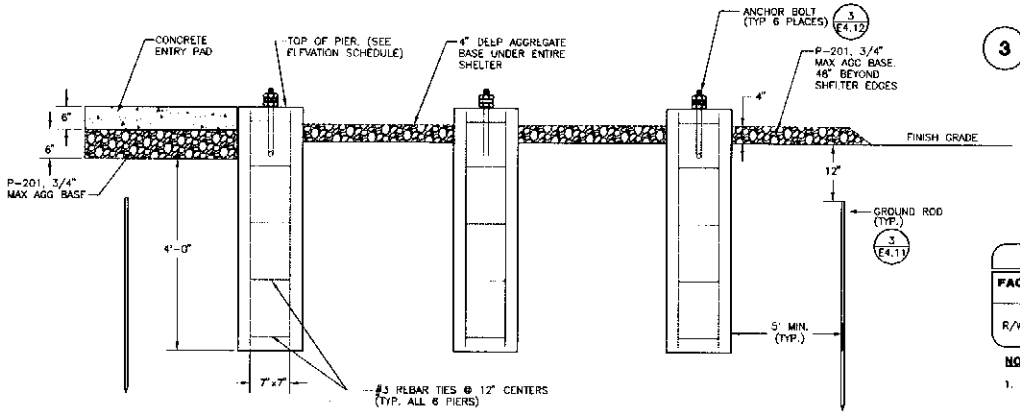

SECTION

1 MALSR SHELTER FOUNDATION

NO SCALE

SHELTER FOUNDATION DATA SCHEDULE

FACILITY	SHELTER SIZE (SOURCE)	TOP OF PIER ELEV.	STA, OFFSET (SHELTER CENTER)	FIN GRADE (SHELTER CENTER)	REMARKS
R/W 26L MALSR	16'x10'	FIN. GRADE + 6" (MIN)	213+35, 408.0 RT	CONTR. VERIFY	NOTE 1.

NOTES:

1. THE INDICATED FINISHED GRADE IS TAKEN FROM THE GRADING PLANS OF THIS CONTRACT. ACTUAL CONDITIONS MAY VARY FROM THE ELEVATION SHOWN. THE INTENT OF THE SCHEDULED TOP OF PIER ELEVATION IS NOT TO REQUIRE REWORKING OF THE FINISHED GRADE BUT TO PROVIDE THE CONFIGURATION SHOWN IN THE SECTION OF DETAIL 1.
2. THE EXISTING FINISHED GRADE AROUND THE SHELTER MUST BE ADJUSTED TO PROVIDE THE CONFIGURATION SHOWN IN THE SECTION OF DETAIL 1. COORDINATE WITH THE EARTHWORK CONTRACTOR TO ACCOMPLISH THIS.
3. ORIENT THE SHELTERS WITH THE AXES PARALLEL TO THE ASSOCIATED RUNWAY CENTERLINE.

1-800-DIG-TESS

AIP PROJECT NO. 3-48-0077-27-09

REFERENCES - BENCH MARKS

DATE	REVISIONS	BY
6/14/11	FAA 26L MALSR (VERT DWG)	ECL

FIRM'S NAME: Kimley-Horn and Associates, Inc. TEXAS FIRM REGISTRATION NO. F-928

FIRM'S SEAL

SCALE: HORIZ. 1" = 400' VERT. 1" = 400'

Date: 07/14/09; Designed by: TCX; Drawn by: JDR; Checked by: DTE; Approved by: ECL

PROJECT NAME: EL PASO INTERNATIONAL AIRPORT RUNWAY 8R-26L AND TAXIWAY L EXTENSION

CITY OF EL PASO

RUNWAY 8R-26L

MALSR FOUNDATION DETAILS

PROJECT NO. 061348018

FILE NO. 348018EL410-412

E4.12