CITY OF EL PASO, TEXAS
AGENDA ITEM DEPARTMENT HEAD'S SUMMARY FORM

DEPARTMENT: **Engineering and Construction Management Department**

AGENDA DATE: **Introduction on September 14, 2010; Public hearing on September 21, 2010**

CONTACT PERSON/PHONE: **R. Alan Shubert, P.E. - ext. 4423**

DISTRICT(S) AFFECTED: **Citywide**

SUBJECT:

Discussion and action on the following code changes to Titles, 9 (Health & Safety), and 18 (Building & Construction) of the City Code, as follows:

a) An Ordinance amending Title 18 (Building & Construction), Chapter 18.02 (Building and Construction administrative Code, Sections 18/02.103.1.1.6 (Prerequisite to Issuance of Permits), and 18/02.103.9.1.2.1 (Prerequisite to Issuance of Certificate of Occupancy) of the El Paso City Code to Amend the Requirements for Issuance of Conditional Building Permits and Certificates of Occupancy for Lots with Conditional Building Permits.

b) An Ordinance amending Title 18 (Building & Construction), Chapter 18.02 (Building and Construction Administrative Code) of the El Paso City Code, by repealing Chapter 18.02 in its entirety and adopting a new Chapter 18.02 in its place.

c) An Ordinance adopting the 2009 Edition of the International Building Code and amending Title 18 (Building & Construction), Chapter 18.08 (Building Code) of the El Paso City Code to provide for local amendments.

d) An Ordinance adopting the 2009 Edition of the International Residential Code and amending Title 18 (Building & Construction), Chapter 18.10 (Residential Code) of the El Paso City Code to provide for local amendments.

e) An Ordinance adopting the 2009 Edition of the International Mechanical Code and amending Title 18 (Building & Construction), Chapter 18.12 (Mechanical Code) of the El Paso City Code to provide for local amendments.

f) An Ordinance adopting the 2008 Edition of the National Electrical Code and amending Title 18 (Building & Construction), Chapter 18.16 (Electrical Code) of the El Paso City Code to provide for local amendments.

g) An Ordinance adopting the 2009 Edition of the International Plumbing Code and amending Title 18 (Building & Construction), Chapter 18.20 (Plumbing Code) of the El Paso City Code to provide for local amendments.

h) An Ordinance adopting the 2009 Edition of the International Fuel Gas Code and amending Title 18 (Building & Construction), Chapter 18.24 (Gas Code) of the El Paso City Code to provide for local amendments

i) An Ordinance adopting the 2009 Edition of the International Existing Building Code and amending Title 18 (Building & Construction), Chapter 18.28 (Existing Building Code) of the El Paso City Code to provide for local amendments.

j) An Ordinance amending Title 18 (Building and Construction), Chapter 18.46 (Landscape), of the El Paso City Code, to provide additional definitions, clarify the landscape requirements for parking lots, lower the percentage of plants required from the plant list, and add an exemption to the landscape requirements.

k) An Ordinance adopting the 2009 Edition of the International Energy Conservation Code and amending Title 18 (Building & Construction), to add Chapter 18.70 (Energy Conservation Code) to the El Paso City Code and providing for local amendments.

l) An Ordinance adopting the 2009 Edition of the International Fire Code and amending Title 9 (Health & Safety), Chapter 9.52 (Fire Prevention Code) of the El Paso City Code to provide for local amendments.

BACKGROUND / DISCUSSION:

The International Code Council has published the 2009 version of the International Code Family and local public input and industry input has been taken to assure that the current version of the codes are amended and adopted as appropriate for the City Of El Paso. These codes are normally revised on a three year cycle, and adoption is key to stay abreast of modern developments in building safety and to be consistent with adoption by the State of Texas of certain codes.

An additional amendment was made after introduction of the ordinance to item b, adding language in 18.02.103.2.3 (Design Professional) defining the sections in the Texas Occupations Code, sections 1001 (Engineers) and 1051 (Architects) that are applicable and govern these professions and adding language in18.02.109.2.5 (Plan Review Options Available to the Applicant) regarding the fee reductions in place for the Tax Increment Financing Zone No. 5 and any neighborhood empowerment zone, which may be designated by resolution of the City Council.

PRIOR COUNCIL ACTION:

The City Council on July 20, 2010 heard the findings of the Planning and Development Legislative Review Committee, and directed staff to go forward with the 2009 International Building Codes, perform additional industry outreach and to bring the codes back for Council consideration in 90 days.

AMOUNT AND SOURCE OF FUNDING:

No funding required for execution of this item.

BOARD / COMMISSION ACTION:

N/A

**********REQUIRED AUTHORIZATION**********

LEGAL: (if required) _____ **FINANCE:** (if required) _____

DEPARTMENT HEAD: _____

(Example: if RCA is initiated by Purchasing, client department should sign also)

Information copy to appropriate Deputy City Manager

APPROVED FOR AGENDA:

CITY MANAGER: _____ **DATE:** _____

ORDINANCE NO. _____

AN ORDINANCE ADOPTING THE 2009 EDITION OF THE INTERNATIONAL FIRE CODE AND AMENDING TITLE 9 (HEALTH AND SAFETY), CHAPTER 9.52 (FIRE PREVENTION CODE), OF THE EL PASO CITY CODE, TO PROVIDE FOR LOCAL AMENDMENTS TO THE 2009 INTERNATIONAL FIRE CODE, THE PENALTY BEING AS PROVIDED IN SECTION 9.52.030.19 (VIOLATIONS PENALTIES) OF THE EL PASO CITY CODE.

WHEREAS, the 2009 edition of the International Fire Code has been published and adoption of the 2009 edition of the International Fire Code is now proposed; and

WHEREAS, the Fire Chief and the Planning and Development Legislative Review Committee have reviewed and favorably recommend the adoption of the 2009 International Fire Code together with the local amendments appropriate for the City of El Paso; and

WHEREAS, the City Council has deemed the proposed local amendments appropriate for the City of El Paso.

NOW, THEREFORE, BE IT ORDAINED BY THE CITY COUNCIL OF THE CITY OF EL PASO:

A. That the book entitled "International Fire Code," 2009 Edition, a copy of which authenticated by the City Clerk is on file in the City Clerk's Office, is hereby adopted by the City Council for the City of El Paso.

B. That Title 9 (Health and Safety), Chapter 9.52 (Fire Prevention Code), of the El Paso City Code, containing the local amendments to the 2009 International Fire Code, shall be and is hereby amended in its entirety to read as follows:

9.52.010 Short title.
This chapter may be cited as the "Fire Code".

9.52.020 Adopted.
A. The book entitled "International Fire Code," 2009 Edition, a copy of which authenticated by the City Clerk is on file in the City Clerk's office, is adopted as the Fire Code of the City, as fully as if copied at length in this chapter, but with the amendments set forth in this chapter.

B. Any references made in this chapter to "IFC" shall mean the 2009 International Fire Code.

C. Whenever reference is made in the 2009 International Fire Code, or any other referenced standard or code, to "the authority having jurisdiction" for enforcement of the

provisions thereof, the term "code official" shall be substituted therefore, unless otherwise provided for in this chapter.

D. The provisions in the 2009 International Fire Code are intended to be cumulative of other provisions and chapters of the El Paso City Code pertaining to fire prevention, unless otherwise expressly stated herein. To the extent that any provisions of the 2009 International Fire Code are in conflict with Title 18 of the City Code, the provisions of Title 18 shall apply.

9.52.030 Chapter 1, Scope and Administration, amended.
International Fire Code, 2009 Edition, Chapter 1, Scope and Administration, is hereby adopted in its entirety with the following amendments:

9.52.030.1 Section 102.1 Construction and design provisions, amended.
International Fire Code, 2009 Edition, Section 102.1 Construction and design provisions, is hereby amended to add paragraph 5 to read as follows:

102.1 Construction and design provisions.
5. Vacant buildings. Vacant shall be as defined by Chapter 18.40 (Vacant Buildings) of the El Paso City Code.

9.52.030.2 Section 103.1 General, amended.
International Fire Code, 2009 Edition, Section 103.1 General, is hereby amended to read as follows:

103.1 General.
The Fire Prevention Division is established within the fire department. The function of the division shall be implementation, administration and enforcement of the provisions of this code, or any other standard referenced within the code.

9.52.030.3 Section 104.6 Official records, amended.
International Fire Code, 2009 Edition, Section 104.6 Official records, is hereby amended to read as follows:

104.6 Official records.
The fire code official shall keep official records as required by Sections 104.6.1 through 104.6.4. Such official records shall be retained for not less than five years or for as long as the structure or activity to which such records relate remains in existence, unless otherwise provided by other regulations. The records of the department shall be open to inspection by the public in accordance with applicable laws.

9.52.030.4 Section 104.9.3 Performance-based design, added.
International Fire Code, 2009 Edition, Section 104.9.3 Performance-based design, is hereby added to read as follows:

104.9.3 Performance-based design.

Performance-based design requires definition of the types of hazards and risks that a design is intended to manage, which take the form of design fire scenarios. As with performance requirements, fire scenarios may be specified by a performance-based code, or may be developed by an engineer based on the hazards present or foreseen in a building or facility.

9.52.030.5 Section 104.9.4 Performance-based submittals, added.
International Fire Code, 2009 Edition, Section 104.9.4 Performance-based design submittals, is hereby added to read as follows:

104.9.4 Performance-based design submittals.
The following required documents shall be prepared and submitted as part of the performance-based design: designer qualifications; concept report (fire protection engineering design brief); performance based design report; specifications and drawings; commissioning/acceptance testing procedures; operations and maintenance manual; other documentation required by the *fire code official.*

9.52.030.6 Section 104.10 Fire investigations, amended.
International Fire Code, 2009 Edition, Section 104.10 Fire investigations, is hereby amended to read as follow:

104.10 Fire investigations.
The fire code official shall have the authority to investigate the origin and cause, and circumstances of any fire, explosion or other hazardous condition. Information that could be related to trade secrets or processes shall not be made part of the public record except as directed by a court of law.

Fee Exception:
The City of El Paso, the County of El Paso, the El Paso Housing Authority, the State of Texas and the United States Government are exempted from payment of fire investigation fees required in Appendix A. Fire investigation services requested by The City of El Paso, the County of El Paso, the El Paso Housing Authority, the State of Texas and the United States Government, or fire investigation services provided in such facilities as owned, operated and maintained by such governmental agencies, shall be exempted from payment of such fire investigation fees.

9.52.030.7 Section 104.12 Plan review and approval, added.
International Fire Code, 2009 Edition, Section 104.12 Plan review and approval is hereby added to read as follows:

104.12 Plan review and approval.
The fire code official shall examine or cause to be examined submitted plans and accompanying documents for evidence of compliance with the provisions of this code.
Plans shall be approved prior to the start of construction, or installation of any fire protection system. The submittal of plans for review does not constitute an authorization to proceed until the required permit is obtained.

9.52.030.8 Section 105.1.1 Permits required, amended.
International Fire Code, 2009 Edition, Section 105.1.1 Permits required, is hereby amended to read as follows:

105.1.1 Permits required.
Permits and licenses required by this code shall be obtained from the code official. Permit and license fees, as required by Appendix A of this code, shall be paid to the city prior to issuance of the permit or license. This fee is charged to pay part of the expense of enforcing this section. Any person commencing work or performing any action requiring a permit under this code without first obtaining the necessary permit shall be subject to a fee of 200% of the scheduled permit fee in addition to the scheduled permit fee and other penalties set forth in Section 109.3 of this code. Issued permits shall be kept on the premises designated therein at all times and shall be readily available for inspection by the code official.

9.52.030.9 Section 105.1.1.1 Payment required, added.
International Fire Code, 2009 Edition, Section 105.1.1.1 Payment required, is hereby added to read as follows:

105.1.1.1 Payment required.
A permit, although issued, shall not be valid until fees have been paid.
Exception: The City of El Paso, the County of El Paso, the El Paso Housing Authority, the State of Texas and the United States Government are exempted from payment of the permit fees required in this chapter; provided, that only such facilities as owned, operated and maintained by such governmental agencies shall be exempted from payment of such permit fees.

9.52.030.10 Section 105.1.2 Types of permits, paragraph 1, Operational permit, amended.
International Fire Code, 2009 Edition, Section 105.1.2 Types of permits, paragraph 1, Operational permit, is hereby amended to read as follows:

1. **Operational Permits**. An operational permit allows the applicant to conduct an operation or a business for which a permit is required by Section 105.6 for a prescribed period not to exceed one year, unless revoked.

9.52.030.11 Section 105.2.3 Time limit of application, amended.
International Fire Code, 2009 Edition, Section 105.2.3 Time limit of application, is hereby amended to read as follows:

Section 105.2.3 Time limitation of application.
An application for an operational permit for any proposed work or operation shall be deemed to have been abandoned if all applicable fees are not paid in full within 30 days after the date of signing of the permit application.

9.52.030.12 Section 105.3.1 Expiration, amended.

International Fire Code, 2009 Edition, Section 105.3.1 Expiration, is hereby amended to read as follows:

105.3.1 Expiration.
An operational permit shall remain in effect for such a period of time as specified in the permit, unless revoked. Permits are not transferable and any change in occupancy, operation, tenancy or ownership shall require that a new permit be issued.

9.52.030.13 Section 105.4 Construction documents, amended.
International Fire Code, 2009 Edition, Section 105.4 Construction documents, is hereby amended to read as follow:

105.4 Construction documents.
Construction documents shall be in accordance with provisions as set forth in the building code.

9.52.030.14 Section 105.6 Required operational permits, amended.
International Fire Code, 2009 Edition, Section 105.6 Required operational permits, is hereby amended to read as follows:

105.6 Required operational permits.
The code official is authorized to issue operational permits and/or licenses for the operations set forth in sections 105.6.1 through 105.6.51.

105.6.1 Aerosol products. An operational permit is required to manufacture, store or handle an aggregate quantity of Level 2 or Level 3 aerosol products in excess of 500 pounds (227 kg) net weight.

105.6.2 Amusement buildings. An operational permit is required to operate a special amusement building.

105.6.3 Aviation facilities. An operational permit is required to use a Group H or Group S occupancy for aircraft servicing or repair and aircraft fuel-servicing vehicles. Additional permits required by other sections of this code include, but are not limited to, hazardous materials and flammable or combustible finishes.

105.6.4 Carnivals and fairs. An operational permit is required to conduct a carnival or fair.

105.6.5 Cellulose nitrate film. An operational permit is required to store, handle or use cellulose nitrate film in a Group A occupancy.

105.6.6 Combustible dust-producing operations. An operational permit is required to operate a grain elevator, flour starch mill, feed mill or a plant pulverizing aluminum, coal, cocoa, magnesium, spices or sugar, or other operations producing combustible dusts as defined in Chapter 2 of the IFC and as amended by this code.

105.6.7 Combustible fibers. An operational permit is required for the storage and handling of combustible fibers in quantities greater than 100 cubic feet (2.8 m3).

Exception: A permit is not required for agricultural storage.

105.6.8 Compressed gases. An operational permit is required for the storage, use or handling at normal temperature and pressure (NTP) of compressed gases in excess of the amounts listed in Table 105.6.8.

Exception: Vehicles equipped for and using compressed gas as a fuel for propelling the vehicle.

Table 105.6.8
Permit Amounts for Compressed Gases

Type of Gas	Amount (cubic feet at NTP)
Corrosive	Any amount
Flammable (except cryogenic fluids and liquefied petroleum gases)	200
Highly toxic	Any amount
Inert and simple asphyxiant	6,000
Oxidizing (including oxygen)	504
Toxic	Any amount

For SI: 1 cubic foot =0.02832 m3 .

105.6.9 Covered mall buildings. An operational permit is required for:

1. The placement of retail fixtures and displays, concession equipment, displays of highly combustible goods and similar items in the mall.

2. The display of liquid- or gas-fired equipment in the mall.

3.The use of open-flame or flame-producing equipment in the mall.

105.6.10 Cryogenic fluids. An operational permit is required to produce, store, transport on site, use, handle or dispense cryogenic fluids in excess of the amounts listed in Table 105.6.10

.

Exception: Permits are not required for vehicles equipped for and using cryogenic fluids as a fuel for propelling the vehicle or for refrigerating the lading.

Table 105.6.10
Permit Amounts for Cryogenic Fluids

Type of Cryogenic Fluid	Inside Building (gallons)	Outside Building (gallons)
Flammable	More than 1	60
Inert	60	500
Oxidizing (includes oxygen)	10	50
Physical or health hazard not indicated above	Any Amount	Any Amount

For SI: 1 gallon = 3.785 L.

105.6.11 Cutting and welding. An operational permit is required to conduct cutting or welding operations within the jurisdiction.

105.6.12 Dry cleaning plants. An operational permit is required to engage in the business of dry cleaning or to change to a more hazardous cleaning solvent used in existing dry cleaning equipment.

105.6.13 Exhibits and trade shows. An operational permit is required to operate exhibits and trade shows.

105.6.14 Explosives. An operational permit is required for the manufacture, storage, handling, sale or use of any quantity of explosive, explosive material, fireworks, or pyrotechnic special effects within the scope of Chapter 33 of the IFC and as amended by this code.

Exception: Storage in Group R-3 occupancies of smokeless propellant, black powder and small arms primers for personal use, not for resale and in accordance with Section 3306 of the 2009 IFC, and as amended by this code.

105.6.15 Fire hydrants and valves. An operational permit is required to use or operate fire hydrants or valves intended for fire suppression purposes which are installed on water systems and accessible to a fire apparatus access road that is open to or generally used by the public.

Exception: A permit is not required for authorized employees of the water company that supplies the system or the fire department to use or operate fire hydrants or valves.

105.6.16 Flammable and combustible liquids. An operational permit is required:

1. To use or operate a pipeline for the transportation within facilities of flammable or combustible liquids. This requirement shall not apply to the off-site transportation in pipelines regulated by the Department of Transportation (Dot) nor does it apply to piping systems.

2. To store, handle or use Class I liquids in excess of 5 gallons (19 L) in a building or in excess of 10 gallons (37.9 L) outside of a building, except that a permit is not required for the following:

2.1. The storage or use of Class I liquids in the fuel tank of a motor vehicle, aircraft, motorboat, mobile power plant or mobile heating plant, unless such storage, in the opinion of the code official, would cause an unsafe condition.

2.2. The storage or use of paints, oils, varnishes or similar flammable mixtures when such liquids are stored for maintenance, painting or similar purposes for a period of not more than 30 days.

3. To store, handle or use Class II or Class IIIA liquids in excess of 25 gallons (95 L) in a building or in excess of 60 gallons (227 L) outside a building, except for fuel oil used in connection with oil-burning equipment.

4. To store, handle or use Class IIIB liquids in tanks or portable tanks for fueling motor vehicles at motor fuel-dispensing facilities or where connected to fuel-burning equipment.

Exception: Fuel oil and used motor oil used for space heating or water heating.

5. To remove Class I or II liquids from an underground storage tank used for fueling motor vehicles by any means other than the approved, stationary on-site pumps normally used for dispensing purposes.

6. To operate tank vehicles, equipment, tanks, plants, terminals, wells, fuel-dispensing stations, refineries, distilleries and similar facilities where flammable and combustible liquids are produced, processed, transported, stored, dispensed or used.

7. To install, alter, remove, abandon, place temporarily out of service (for more than 90 days) or otherwise dispose of an underground, protected above-ground or above-ground flammable or combustible liquid tank.

8. To change the type of contents stored in a flammable or combustible liquid tank to a material that poses a greater hazard than that for which the tank was designed and constructed.

9. To manufacture, process, blend or refine flammable or combustible liquids.

10. To engage in the dispensing of liquid fuels into the fuel tanks of motor vehicles at commercial, industrial, governmental or manufacturing establishments.

11. To utilize a site for the dispensing of liquid fuels from tank vehicles into the fuel tanks of motor vehicles, marine craft and other special equipment at commercial, industrial, governmental or manufacturing establishments.

105.6.17 Floor finishing. An operational permit is required for floor finishing or surfacing operations exceeding 350 square feet (33 m2) using Class I or Class II liquids.

105.6.18 Fruit and crop ripening. An operational permit is required to operate a fruit or crop-ripening facility or conduct a fruit ripening process using ethylene gas.

105.6.19 Fumigation and thermal insecticidal fogging. An operational permit is required to operate a business of fumigation or thermal insecticidal fogging and to maintain a room, vault or chamber in which a toxic or flammable fumigant is used.

105.6.20 Hazardous materials. An operational permit is required to store, transport on site, dispense, use or handle hazardous materials in excess of the amounts listed in Table 105.6.20.

105.6.20.1 Exempt materials. The following materials are specifically exempted from any of the permitting requirements in 105.6.20:

a. Inert gases, which do not support combustion, to include argon, helium, krypton, neon, xenon, compressed air, carbon dioxide, and nitrogen. These gasses are subject to regulation under Section 105.6.10 when stored as cryogenic fluids.

b. Any hazardous material that is handled, used, stored, or disposed of and is kept for noncommercial purposes at a private residence in Permissible Quantities.

c. Any material contained in a transportation vehicle when said vehicle is not being used for permanent hazardous materials storage.

d. Any material, which is held solely as a pharmaceutical product.

e. Any hazardous waste material in a hazardous waste management facility that is permitted by the State pursuant to 42 U.S.C. Section 6925; provided, however, such materials shall be listed in the permit application if one is otherwise required.

f. Radioactive material(s) regulated at the Federal or State level; provided, however, that such material(s) be listed in the permit application if one is otherwise required.

g. Any material to the extent it is used in Permissible Quantities in routine agricultural operations by the end user.

h. Commercial products kept in Permissible Quantities and used at a facility solely for janitorial purposes.

i.Any material in interstate transmission facilities or interstate pipeline facilities regulated by 49 U.S.C. Sec. 60101 et. seq. (1997) and any amendments thereto, and any materials in pipeline facilities regulated by Chapter 117 of the Natural Resources Code, Vernon's Ann. Civ. Stat., and any amendments thereto, or subject to Texas Railroad Commission Pipeline Safety Laws and Regulations, and any amendments thereto.

TABLE 105.6.20
PERMIT AMOUNTS FOR HAZARDOUS MATERIALS

TYPE OF MATERIAL	AMOUNT
Combustible liquids	See Section 105.6.16
Corrosive materials	
Gases	See Section 105.6.8
Liquids	55 gallons
Solids	1000 pounds
Explosive materials	See Section 105.6.14
Flammable materials	
Gases	See Section 105.6.8
Liquids	See Section 105.6.16
Solids	100 pounds
Oxidizing materials	
Gases	
Liquids	
Class 4	See Section 105.6.8
Class 3	Any Amount
Class 2	1 gallona
Class 1	10 gallons
Solids	55 gallons
Class 4	Any Amount
Class 3	10 poundsb
Class 2	100 pounds
Class 1	500 pounds
Organic peroxides	
Liquids	
Class I	
Class II	Any Amount
Class III	Any Amount
Class IV	1 gallon
Class V	2 gallons
Solids	No Permit Required
Class I	Any Amount
Class II	Any Amount
Class III	10 pounds
Class IV	20 pounds
Class V	No Permit Required
Pyrophoric materials	
Gases	Any Amount
Liquids	Any Amount
Solids	Any Amount
Toxic materials	See Section 105.6.8
Gases	10 gallons
Liquids	100 pounds

Solids	
Unstable (reactive) materials	
Liquids	
Class 4	
Class 3	Any Amount
Class 2	Any Amount
Class 1	5 gallons
Solids	10 gallons
Class 4	Any Amount
Class 3	Any Amount
Class 2	50 pounds
Class 1	100 pounds
Water-reactive Materials	
Liquids	
Class 3	
Class 2	Any Amount
Class 1	5 gallons
Solids	55 gallons
Class 3	Any Amount
Class 2	50 pounds
Class 1	500 pounds

For SI: 1 gallon = 3.785 L, 1 pound = 0.454 kg.

a. 20 gallons when Table 2703.1.1(1) Note k applies and hazard identification signs in accordance with Section 2703.5 are provided for quantities of 20 gallons or less.

b. 200 pounds when Table 2703.1.1(1) Note k applies and hazard identification signs in accordance with Section 2703.5 are provided for quantities of 200 pounds or less.

105.6.21 HPM Facilities. An operational permit is required to store, handle or use hazardous production materials.

105.6.22 High-piled storage. An operational permit is required to use a building or portion thereof as a high-piled storage area exceeding 500 square feet (46.5m2).

105.6.23 Hot work operations. An operational permit is required for hot work including, but not limited to:

1. Public exhibitions and demonstrations where hot work is conducted.

2. Use of portable hot work equipment inside a structure.

Exception: Work that is conducted under a construction permit.

3. Fixed-site hot work equipment such as welding booths.

4. Hot work conducted within a wildfire risk area.

5. Application of roof coverings with the use of an open-flame device.

6. When approved, the fire code official shall issue a permit to carry out a hot work program. This program allows approved personnel to regulate their facility's hot work operations. The approved personnel shall be trained in the fire safety aspects denoted in this chapter and shall be responsible for issuing permits requiring compliance with the requirements found in Chapter 26 of

the IFC, and as amended by this code. These permits shall be issued only to their employees or hot work operations under their supervision.

105.6.24 Industrial ovens. An operational permit is required for operation of industrial ovens regulated by Chapter 21 of the IFC, and as amended by this code.

105.6.25 Lumber yards and woodworking plants. An operational permit is required for the storage or processing of lumber exceeding 100,000 board feet (8,333 ft3) (236m3).

105.6.26 Liquid or gas-fueled vehicles or equipment in assembly buildings. An operational permit is required to display, operate or demonstrate liquid- or gas-fueled vehicles or equipment in assembly buildings.

105.6.27 LP-gas. An operational permit is required for storage and use of LP-gas in containers with an aggregate total of 120 gallon water capacity or more.

105.6.28 Magnesium. An operational permit is required to melt, cast, heat treat or grind more than 10 pounds (4.54 kg) of magnesium per working day.

105.6.29 Miscellaneous combustible storage. An operational permit is required to store in any building or upon any premises in excess of 2,500 cubic feet (71 m3) gross volume of combustible empty packing cases, boxes, barrels or similar containers, rubber tires, rubber, cork or similar combustible material.

105.6.30 Open burning. An operational permit is required for the kindling or maintaining of an open fire or a fire on any public street, alley, road, or other public or private ground. Instructions and stipulations of the permit shall be adhered to.

Exception: Recreational fires.

105.6.31 Open flames and torches. An operational permit is required to remove paint with a torch; or to use a torch or open-flame device in a wildfire risk area.

105.6.32 Open flames and candles. An operational permit is required to use open flames or candles in connection with assembly areas, dining areas of restaurants or drinking establishments.

105.6.33 Organic coatings. An operational permit is required for any organic-coating manufacturing operation producing more than 1 gallon (4 L) of an organic coating in one day.

105.6.34 Places of assembly. An operational permit is required to operate a place of assembly.

105.6.35 Private fire hydrants. An operational permit is required for the removal from service, use or operation of private fire hydrants.

Exception: A permit is not required for private industry with trained maintenance personnel, private fire brigade or fire departments to maintain, test and use private hydrants.

105.6.36 Pyrotechnic special effects material. An operational permit is required for use and handling of pyrotechnic special effects material.

105.6.37 Pyroxylin plastics. An operational permit is required for storage or handling of more than 25 pounds (11 kg) of cellulose nitrate (pyroxylin) plastics and for the assembly or manufacture of articles involving pyroxylin plastics.

105.6.38 Refrigeration equipment. An operational permit is required to operate a mechanical refrigeration unit or system regulated by Chapter 6 of the IFC, and as amended by this code, containing in excess of 20 lb (9.1 kg) of refrigerant, other than air or water.

Exception: Air conditioning units or systems.

105.6.39 Repair garages and motor fuel-dispensing facilities. An operational permit is required for the operation of repair garages and automotive, marine and fleet motor fuel-dispensing facilities.

105.6.40 Rooftop heliports. An operational permit is required for the operation of a rooftop heliport.

105.6.41 Spraying or dipping. An operational permit is required to conduct a spraying or dipping operation utilizing flammable or combustible liquids or the application of combustible powders regulated by Chapter 15 of the IFC, and as amended by this code.

105.6.42 Storage of scrap tires and tire byproducts. An operational permit is required to establish, conduct or maintain storage of scrap tires and tire byproducts that exceeds 2,500 cubic feet (71 m3) of total volume of scrap tires and for indoor storage of tires and tire byproducts.

105.6.43 Temporary membrane structures and tents and canopies. An operational permit is required to operate an air-supported temporary membrane structure or a tent having an area in excess 200 square feet (19m2), or a canopy in excess of 400 square feet (37 m2).

Exceptions:

1. Tents used exclusively for recreational camping purposes.

2. Fabric canopies and awnings open on all sides which comply with all of the following:

2.1. Individual canopies shall have a maximum size of 700 square feet (65 m2).
2.2. The aggregate area of multiple canopies placed side by side without a fire break clearance of 12 feet (3.7 m) shall not exceed 700 square feet (65 m2) total.
2.3. A minimum clearance of 12 feet (3.7 m) to structures and other tents shall be provided.

105.6.44 Tire-rebuilding plants. An operational permit is required for the operation and maintenance of a tire-rebuilding plant.

105.6.45 Waste handling. An operational permit is required for the operation of automobile wrecking yards, junkyards, recycling facilities, wrecking yards, and waste material-handling facilities.

105.6.46 Wood products. An operational permit is required to store chips or hogged material in excess of 200 cubic feet (6 m3).

105.6.47 Battery systems. An operational permit is required to install stationary lead acid battery systems having a liquid capacity of more than 50 gallons (189 L).

105.6.48 Blasting operations. An operational permit is required to conduct blasting operations. Requirements as set forth in Chapter 33 of the IFC, and as amended by Section 9.52.120 of this code, must be met in order to obtain a blasting permit.

105.6.49 Blaster's license. A blaster's license shall be required to conduct any blasting operations within the jurisdictional area. A blaster's license shall be obtained in accordance with Chapter 33 of the IFC, and as amended by this code.

105.6.50 Commercial Day Care facilities-Children. An operational permit is required for the operation of a commercial child day care facility.

105.6.51 For Use Permit. The fire official may require an operational permit to be issued for any operation, process, special event, public display, or exhibit not specifically covered by this code when the fire official deems such operation, process, special event, public display, or exhibit to be hazardous.

9.52.030.15 Section 105.7 Required construction permits, amended.
International Fire Code, 2009 Edition, Section 105.7 required construction permits, is hereby amended to read as follows:

105.7 Required construction permits.
Where required, application for construction permit shall be made to the building official in accordance with Section 105 of the International Building Code and Title 18, Chapter 18.08 (Building Code) of the El Paso City Code.

9.52.030.16 Section 107.2.1.1 Private fire hydrant test and inspection records, added.
International Fire Code, 2009 Edition, Section 107.2.2.2 Private fire hydrant test and inspection records, is hereby added to read as follows:

107.2.1.1 Private fire hydrant test and inspection records.
Private fire hydrant test and inspection records shall be filed with the Fire Marshal's Office within two working days from the private hydrant's date of test/inspection.

9.52.030.17 Section 107.2.1.2 Fire hydrant not operative, added.
International Fire Code, 2009 Edition, Section 107.2.1.2 Fire hydrant not operative, is hereby added to read as follows:

107.2.1.2 Fire hydrant not operative.
If a fire hydrant is not operative and is not repaired at the time of its test/inspection, the hydrant's condition must be reported to the Fire Marshal's Office immediately.

9.52.030.18 Section 108.1 Board of appeals established, amended.
International Fire Code, 2009 Edition, Section 108.1 Board of appeals established, is hereby amended to read as follow:

108.1 Board of appeals.
Appeals of orders, decisions or determinations by the code official relative to the application and interpretation of this code may be appealed to the Construction Board of Appeals in accordance with Chapter 2.30 of the City Code.

9.52.030.19 Section 109.3 Violation penalties, amended.
International Fire Code, 2009 Edition, Section 109.3 Violation penalties, is hereby amended to read as follows:

109.3 Violation penalties.
Persons who shall violate a provision of this code or shall fail to comply with any of the requirements thereof or who shall erect, install, alter, repair or do work in violation of the approved construction documents or directive of the code official, or of a permit or certificate used under provisions of this code, shall be guilty of a misdemeanor, punishable by a fine of not more than two thousand dollars. Each day that a violation continues after due notice has been served shall be deemed a separate offense.

9.52.030.19.1 Section 109.4 Citations, added.
International Fire Code, 2009 Edition, Section 109.4 Citations, is hereby added to read as follow:

109.4 Citations.
The fire official shall have the authority to issue citations for violations of provisions of this code.

9.52.030.19.2 Section 111.4 Failure to comply, amended.

International Fire Code, 2009 Edition, Section 111.4 Failure to comply, is hereby amended to read as follows:

111.4 Failure to comply.
Any person who shall continue any work after having been served with a stop work order, except such work as that person is directed to perform to remove a violation or unsafe condition, shall be liable to a fine of not more than two thousand dollars.
(Ord. 16812 § 3 (part), 2007; Ord. 15964 § 1 (part), 2004)

9.52.040 Chapter 2, Definitions, amended.
International Fire Code, 2009 Edition, Chapter 2, Definitions, is hereby adopted in its entirety with the following amendments:

9.52.040.1 Section 202 General Definitions, amended.
International Fire Code, 2009 Edition, Section 202 General Definitions, is hereby amended by adding or changing the following definitions in their appropriate places:

ALTER or ALTERATION--Any change or modification in construction or occupancy.

BUILDING OFFICIAL--Where the term "Building Official" is used within the fire prevention code and this chapter, it shall have the same meaning as set forth in Section 18.02.101.4.1 of this code.

CODE OFFICIAL--The fire chief or a duly authorized representative.

ENVIRONMENT--means any surface water, groundwater, drinking water supply, land surface or subsurface strata, or ambient air within or under the control of the United States.

FIRE CHIEF--the officer or other person charged with the administration of the Fire Department serving the jurisdiction, also known as the Fire Code Official, or his authorized representative.

FIRE DISTRICT--heavily populated or congested commercial area as described in Chapter 18.08 of the City Code, also known as the 'limits established by law'.

FIRE MARSHAL--the head of the fire prevention division of the fire department or his authorized representative.

FIRE OFFICIAL--Where the term "fire official" is used within this code it shall mean the fire code official.

JURISDICTIONAL AREA--within the city limits of the city or within five thousand feet thereof. Also known as Extra Territorial Jurisdiction (ETJ). Refer to current metes and boundaries of the City of El Paso.

PERSON--means any individual, firm, trust, partnership, corporation, joint venture, association, or other legal entity; any group of the foregoing organized for a business purpose; or any governmental entity.

VACANT--as defined by Chapter 18.40 (Vacant Buildings) of the El Paso City Code.

9.52.050 Chapter 3, General Requirements, amended.
International Fire Code, 2009 Edition, Chapter 3, General Requirements, is hereby adopted in its entirety with the following amendments:

9.52.050.1 Section 304.1 Waste accumulation prohibited, amended.
International Fire Code, 2009 Edition, Section 304.1 Waste accumulation prohibited, is hereby amended to read as follows:

304.1 Waste accumulation prohibited.
Combustible waste material, including but not limited to combustible fluff and scrap material, creating a fire hazard shall not be allowed to accumulate in buildings, or structures, or upon premises.

9.52.050.2 Section 307.2.1 Authorization, amended.
International Fire Code, 2009 Edition, Section 307.2.1 Authorization, is hereby amended to read as follows:

307.2.1 Authorization.
Open burning shall only be permitted with prior approval from the state or local air and water quality management authority, provided that all conditions specified in the authorization are followed. Upon authorization by the state or local air and water quality management authority, the fire official shall be notified of the date, time and location of the proposed open burning. If the open burning is to be a bonfire, all additional requirements of the fire official must be met prior to approval.

9.52.050.3 Section 310 Smoking, deleted.
International Fire Code, 2009 Edition, Section 310 Smoking, is hereby deleted in its entirety. Refer to city ordinance on smoking.

9.52.050.4 Section 312.2 Posts, amended.
International Fire Code, 2009 Edition, Section 312.2 Posts, paragraph 5, is hereby amended to read as follows:

312.2 Posts.
5. Located not less than 5 feet (1524 mm) from the protected object.

9.52.050.5 Section 315.3 Outside storage, amended.
International Fire Code, 2009 Edition, Section 315.3 Outside Storage, is hereby amended to read as follows:

315.3 Outside storage.
Outside storage, including but not limited to pile storage of combustible materials, shall not be located within 10 feet (3048mm) of a property line, building, and or structure. Outside storage, including pile storage shall be maintained from an existing fence line a minimum distance equal to the height of the material stored.

Exceptions:

1. The separation distance to a property line is allowed to be reduced to 3 feet (914mm) for storage not exceeding 6 feet (1829mm) in height.

2. The separation distance to a property line is allowed to be reduced when the fire official determines that no hazard to the adjoining property exists.

9.52.050.6 Section 315.3.2 Height, amended.
International Fire Code, 2009 Edition, Section 315.3.2 Height, is hereby amended to read as follows:

315.3.2 Height.
Storage in the open, including but not limited to pile storage, shall not exceed 20 feet (6096mm) in height.

9.52.050.7 Section 315.3.3 Storage separation width, added.
International Fire Code, 2009 Edition, Section 315.3.3 Storage separation width, is hereby added to read as follows:

315.3.3 Storage separation width.
A minimum of 20 feet (6096mm) width separation between all outside storage, including but not limited to, pile storage, shall be provided.

9.52.050.8 Reserved for Recycling Facilities.

9.52.060 Chapter 4, Emergency Planning and Preparedness, amended.
International Fire Code, 2009 Edition, Chapter 4, Emergency Planning and Preparedness, is hereby adopted in its entirety with the following amendments:

9.52.060.1 Section 408.2.2 Announcements, amended.
International Fire Code, 2009 Edition, Section 408.2.2 Announcements, is hereby amended to read as follows:

408.2.2 Announcements.
In Theaters, motion picture theaters, auditoriums and similar assembly occupancies in Group A used for non continuous programs, an audible announcement shall be made in both English and Spanish not more than 10 minutes prior to the start of each program to notify the occupants of the location of the exits to be used in the event of a fire or other emergency.

Exception: In motion theaters, the announcement is allowed to be projected in both English and Spanish upon the screen in a manner approved by the fire code official.

9.52.060.2 Section 408.12 Places of Assembly, added.
International Fire Code, 2009 Edition, Section 408.12 Places of Assembly, is hereby added to read as follows:

408.12 Places of Assembly
408.12.1 Overcrowding.
The number of persons in any building or portion thereof shall not exceed the amount permitted in accordance with the Building Code. The owner, supervisor or manager responsible for admitting persons shall be responsible for keeping an accurate occupant count at all times during business hours. In places of assembly with a capacity of 100 or more persons, the occupant count shall be kept in written form and made readily available to Fire official or his authorized representative upon request or at each 30 minute intervals.

408.12.2 Authority of fire official in overcrowded conditions.
No person shall permit overcrowding or admittance of any person beyond the approved capacity of any place of assembly. The fire official, upon finding any overcrowded conditions or obstructions in aisles, passageways or other means of egress, or upon finding any conditions which constitutes a threat to life safety, shall cause the performance, presentation, spectacle or entertainment to be stopped until such condition or obstruction is corrected.

408.12.3 Offense for allowing overcrowding.
Any owner, supervisor or manager who shall admit persons in excess of the occupant capacity set by the Building Official shall be guilty of a misdemeanor offense punishable by a fine as provided in the City Code. Each person admitted or ticket sold in excess of such number shall constitute a separate offense.

408.12.4 Failure to comply.
For failure to comply herewith, the Fire official may, in the name of the City, apply to a court of competent jurisdiction for an injunction to compel compliance. Failure to comply with this subsection shall make the person so failing, and any person by whom he was employed at the time he failed to comply, subject to the enforcement provisions of Section 109 of the IFC and Section 9.52.030.19 of the City Code, and he or she shall in addition show cause, if any exists, why he or she should not be eligible for a permit for two (2) years after the date of violation. These penalties are in addition to any criminal penalties provided for by this chapter.

9.52.070 Chapter 5, Fire Service Features, amended.
International Fire Code, 2009 Edition, Chapter 5, Fire Service Features, is hereby adopted in its entirety with the following amendments:

9.52.070.1. Section 502.1 Definitions, amended.

International Fire Code, 2009 Edition, Section 502.1 Definitions, is hereby amended by adding the following definition in its appropriate place:

FIRE ATTACK ACCESS POINT--The most remote corner of the building or the most remote approved access/egress man door.

9.52.070.2 Section 503.1.4 Facility yards, added.
International Fire Code, 2009 Edition, Section 503.1.4 Facility yards, is hereby added to read as follows:

503.1.4 Facility yards
An approved fire apparatus access road shall be provided to within 150 feet (45720mm) of all outside combustible/flammable materials storage, including but not limited to pile storage, located in automobile wrecking yards, junkyards, recycling facilities, or wrecking yards.

9.52.070.3 Section 503.2.5 Dead ends, amended.
International Fire Code, 2009 Edition, Section 503.2.5 Dead ends, is hereby amended to read as follows:

503.2.5 Dead ends.
Dead-end fire apparatus access roads in excess of 250 feet in length shall be provided with an approved area for turning around fire apparatus.

9.52.070.4 Section 505.1 Address identification, amended.
International Fire Code, 2009 Edition, Section 505.1 Address identification, is hereby amended to read as follows:

505.1 Address Numbers.
New and existing buildings shall be numbered in accordance with Title 18 of the City Code.

9.52.070.5 Section 507.3.1 Minimum pressure requirement, added.
International Fire Code, 2009 Edition, Section 507.3.1 Minimum pressure requirement, is hereby added to read as follows:

507.3.1 Minimum pressure requirement.
When the water supply system is intended to provide fire fighting capability, the water supply system must also be designed to maintain a minimum pressure of 20 psi under combined fire and drinking water flow conditions.
(30 TAC 290 Subchapter D: Rules and Regulations for Public Water Systems)

9.52.070.6 Section 507.4.1 Flow test adjustments, added.
International Fire Code, 2009 Edition, Section 507.4.1 Flow test adjustments, is hereby added to read as follows:

507.4.1 Flow Test Adjustments.
Water flow test data shall be adjusted to account for daily and seasonal fluctuations, large simultaneous industrial use, future demand on water supply, or any other condition that could affect the water supply. The fire protection system design shall be based on not more than 90% of the water flow test capacity. The water flow test data shall only be valid if the required data is obtained within three years from the date plans are submitted to the *fire code official*.

9.52.070.7 Section 507.5.1 Where required, exception added.
International Fire Code, 2009 Edition, Section 507.5.1 Where required, is hereby amended to add an exception to read as follows:

Exception:

3. If there are two (2) fire hydrants that are within 600 feet (183 m) of the facility or building meeting the criteria as described in 507.5.1 the 400-foot limit requirement shall not apply.

2009 IFC Section 507 – Fire Protection Water Supplies

Maximum Fire Hydrant Distance(s) Measured to Most Remote Portion of Building

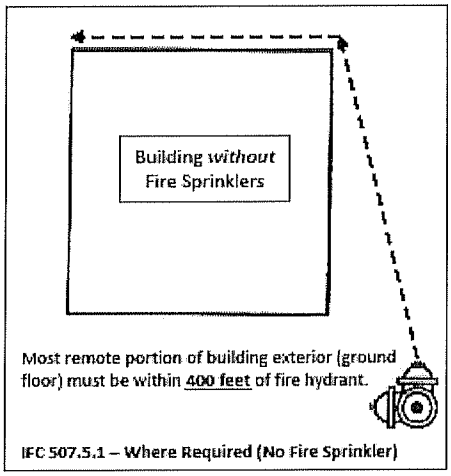

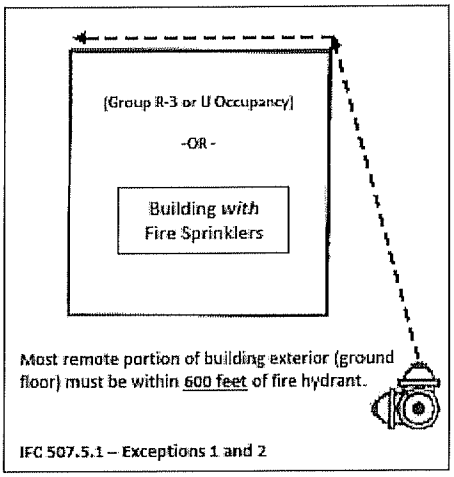

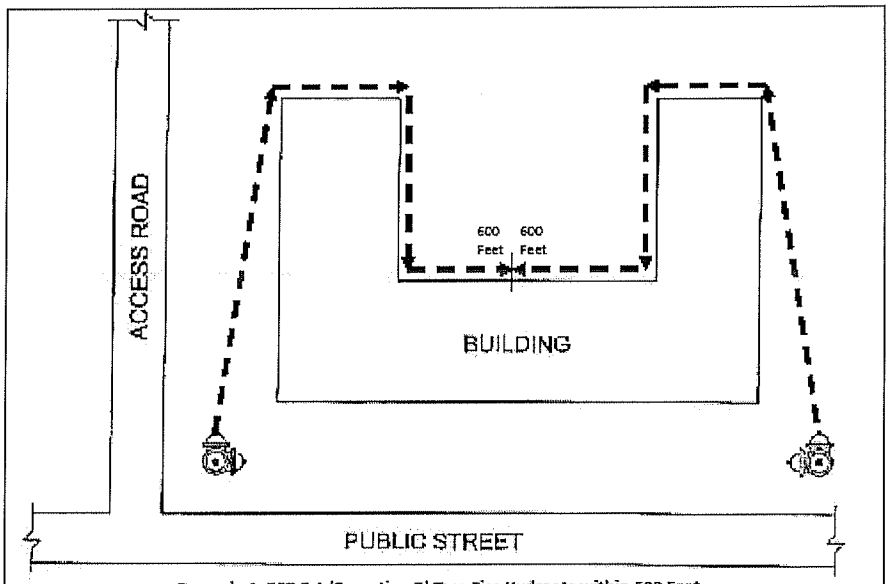

Example 1: 507.5.1 (Exception 3) Two Fire Hydrants within 600 Feet
Most remote portion of building exterior (ground floor) must be within 600 feet of fire hydrant.

9.52.070.8 Section 507.5.5 Clear space around hydrants, amended.
International Fire Code, 2009 Edition, Section 507.5.5 Clear space around hydrants, is hereby amended to read as follows:

507.5.5 Clear space around hydrants.
A 5-foot (1524 mm) clear space shall be maintained around the circumference of fire hydrants except as otherwise required or approved.

9.52.070.9 Section 508.1.5 Required features, paragraph added.
International Fire Code, 2009 Edition, Section 508.1.5 Required features, is hereby amended to add a paragraph to read as follows:

508.1.5 Required features.

18. The command center shall be separated from the remainder of the building by not less than a 1 hour fire-resistance-rated fire barrier. No openings (doors and windows) are permitted between the fire command center and the building being protected.

9.52.080 Chapter 9, Fire Protection Systems, amended.
International Fire Code, 2009 Edition, Chapter 9, Fire Protection Systems, is hereby adopted in its entirety with the following amendments:

9.52.080.1 Section 901.2.2 Supporting data, added.
International Fire Code, 2009 Edition, Section 901.2.2 Supporting data, is hereby added to read as follows:

901.2.2 Supporting data.
The supporting data in the form of hydraulic calculations required by fire code official for installation or modification of all fire suppression systems shall be valid if the flow test data is within 3 years from the date plans are submitted.

9.52.080.2 Section 901.4.5 Private fire hydrants, added.
International Fire Code, 2009 Edition, Section 901.4.5 Private fire hydrants, is hereby added to read as follows:

901.4.5 Private fire hydrants.
All private fire hydrants shall comply with the approved EPWU Fire Hydrant Specifications.

9.52.080.3 Section 901.4.5.1 Breakable flange, added.
International Fire Code, 2009 Edition, Section 901.4.5.1 Breakable flange, is hereby added to read as follows:

901.4.5.1 Breakable flange.
Private fire hydrant's breakable flange shall not be below 1 inch and shall not extend above 6 inches from final grade.

9.52.080.4 Section 903.2.8.1 Group R-1, added.
International Fire Code, 2009 Edition, Section 903.2.8.1 Group R-1, is hereby added to read as follows:

903.2.8.1 Group R-1.
An automatic sprinkler system installed in accordance with IFC Section 903.3, as amended, shall be provided throughout all buildings with a Group R-1 fire area.
Exceptions:

1. Where guestrooms are not more than three stories above the lowest level of exit discharge and each guestroom has at least one door leading directly to an exterior exit access that leads directly to approved exits.

2. A residential sprinkler system installed in accordance with Section 903.3.1.2 shall be allowed in buildings, or portions thereof, of Group R-1.

9.52.080.5 Section 903.2.8.2 Group R-2, added.
International Fire Code, 2009 Edition, Section 903.2.8.2 Group R-2, is hereby added to read as follows:

903.2.8.2 Group R-2.
An automatic sprinkler system shall be provided throughout all floors of buildings with a Group R-2 fire area where more than two stories in height, including basements, or where having more than 16 dwelling units.

Exception: A residential sprinkler system installed in accordance with Section 903.3.1.2 shall be allowed in buildings, or portions thereof, of Group R-2.

9.52.080.6 Section 903.2.8.3 Group R-4, added.
International Fire Code, 2009 Edition, Section 903.2.8.3 Group R-4 is hereby added to read as follows:

903.2.8.3 Group R-4.
An automatic sprinkler system shall be provided throughout all buildings with a Group R-4 fire area with more than eight occupants.

Exception: An automatic sprinkler system installed in accordance with Section 903.3.1.2 or 903.3.1.3 shall be allowed in Group R-4 facilities.

9.52.080.7 Section 903.2.11.3 Buildings 55 feet or more in height, amended.
International Fire Code, 2009 Edition, Section 903.2.11.3 Buildings 55 feet or more in height is hereby added to read as follows:

903.2.11.3 Buildings 35 feet or more in height.
An automatic sprinkler system shall be installed throughout buildings with a floor level having an occupant load of 30 or more that is located 35 feet (10,668mm) or more above the lowest level of fire department vehicle access.

Exceptions:

1. Airport control towers.

2. Open parking structures.
3. Occupancies in Group F-2.

9.52.080.8 Section 903.4.4 Multi Tenant Buildings, added.
International Fire Code, 2009 Edition, Section 903.4.4 Multi Tenant Buildings, is hereby added to read as follows:

903.4.4 Multi Tenant Buildings.
In buildings requiring sprinkler systems with multiple tenants, where no fire alarm is required, each tenant will have the minimum of one notification device (horn/strobe) to provide audio and visual notification upon activation of the monitoring alarm system, in a location approved by the code official.

9.52.080.9 Section 906.3.5 Minimum extinguisher requirements, added.
International Fire Code, 2009 Edition, Section 906.3.5 Minimum extinguisher requirements, is hereby added to read as follows:

906.3.5 Minimum extinguisher requirements.
Each individual occupancy shall have, at a minimum, one 2A1OBC extinguisher for every 3000 square feet, or fraction thereof. Greater protection may be required depending on the nature of the hazard.

9.52.080.10 Section 907.2.15 High-piled combustible storage areas, amended.
International Fire Code, 2009 Edition, Section 907.2.15 High-piled combustible storage areas, is hereby amended to read as follows:

907.2.15 High-piled combustible storage areas.
An automatic smoke detections system and an automatic fire detection system shall be installed throughout high-piled combustible storage areas where required by Chapter 23 of the IFC and as amended by this code.

9.52.080.11 Section 912.5.1 Backflow protection device enclosures, added.
International Fire Code, 2009 Edition, Section 912.5.1 Backflow protection device enclosures, is hereby added to read as follows:

912.5.1 Backflow protection device enclosures.
Backflow protection devices shall be provided freeze protection by means of a "hot box" style insulated enclosure meeting or exceeding ASSE 1060 standards.
Existing backflow protection devices that are protected with wrapped style insulation shall be retro-fitted with the appropriate enclosure if existing insulation is damaged or missing.

9.52.090 Chapter 10, Means of Egress, amended.
International Fire Code, 2009 Edition, Chapter 10, Means of Egress, is hereby adopted in its entirety with the following amendments:

9.52.090.1 Section 1008.1.9.8 Electromagnetically locked egress doors, amended.
International Fire Code, 2009 Edition, Section 1008.1.9.8 Electromagnetically locked egress doors, is hereby amended to read as follows:

1008.1.9.8 Electromagnetically locked egress doors.
Doors in the *means of egress* that are not otherwise required to have panic hardware in buildings with an occupancy in Group A, B, E, M, R-1 or R-2, S and doors to tenant spaces in Group A, B, E, M, R-1 or R-2, S shall be permitted to be electromagnetically locked if equipped with *listed* hardware that incorporates a built-in switch and meet the requirements below:

1. The *listed* hardware that is affixed to the door leaf has an obvious method of operation that is readily operated under all lighting conditions.

2. The l*isted* hardware is capable of being operated with one hand.

3. Operation of the *listed* hardware releases to the electromagnetic lock and locks the door immediately.

4. Loss of power to the *listed* hardware automatically unlocks the door.

9.52.100 Chapter 22, Motor Fuel-Dispensing Facilities and Repair Garages, amended.
International Fire Code, 2009 Edition, Chapter 22, Motor fuel-Dispensing Facilities and Repair Garages, is hereby adopted in its entirety with the following amendments:

9.52.100.1 Section 2202.1 Definitions, amended.
International Fire Code, 2009 Edition, Section 2202.1 Definitions, is hereby amended by amending the following definition in its appropriate place:

REPAIR GARAGE. A building, structure, or portion thereof used for servicing, or repairing motor vehicles, or a building, structure, or portion thereof used for installation of after market parts and accessories on motor vehicles.

9.52.110 Chapter 23, High-Piled Combustible Storage, amended.
International Fire Code, 2009 Edition, Chapter 23 High-Piled Combustible Storage, is hereby adopted in its entirety with the following amendments:

9.52.110.1 Section 2304.3 Water flow test data adjustment, added.
International Fire Code, 2009 Edition, Section 2304.3 Water flow test data adjustment, is hereby added to read as follows:

2304.3 Water flow test data adjustment.
The water flow test data shall be adjusted by the system designer to account for daily and seasonal fluctuations, large simultaneous industrial use, and future demand on the water supply system, or any other condition that could affect the water supply. The fire

protection system design shall be based on not more than 90% of the water flow test capacity.

9.52.110.2 Section 2306.6.1.4 Labeling access doors, added.
International Fire Code, 2009 Edition, Section 2306.6.1.4 Labeling access doors, is hereby added to read as follows:

2306.6.1.4 Labeling access doors.
Fire department access doors shall comply with 2009 IFC Section 509.1. Fire department access doors shall be plainly marked with the words, "Fire Access Door" in red letters at least 6 inches (152 mm) high on a white background.

9.52.110.3 Section 2311 Existing Buildings, added.
International Fire Code, 2009 Edition, Section 2311 Existing Buildings, is hereby added to read as follows:
2311
EXISTING BUILDINGS

2311.1 Purpose and intent.
The City Council hereby finds, as a matter directly affecting public safety, protection of property, and the life safety of personnel involved in fire suppression activities, that all existing buildings used for high-piled combustible storage must comply with IFC Chapter 23, as amended.

2311.2 Applicability.
The provisions of IFC Chapter 23, as amended, shall apply to all existing buildings used for high-piled combustible storage, on or after December 8, 1998, regardless of the date of construction or prior issuance of a Certificate of Occupancy for that building.

2311.3 Fire protection.
All existing buildings used for high-piled combustible storage must comply with the fire protection systems requirements identified in IFC Table 2306.2 and the International Building Code, 2009 Edition (IBC), as amended.

2311.4 Effective date.
After the effective date, it shall be unlawful for any person, firm, or corporation to use, or permit the use, of any building, structure, or portion thereof, for high-piled combustible storage which does not fully comply with the requirements of IFC Chapter 23, as amended.

After the effective date, it shall be unlawful for any person, firm, or corporation to use, or permit the use, of any building, structure, or portion thereof, for high-piled combustible storage without a permit as required in IFC Section 2301.2 and IFC Section 105.6, as amended.

2311.5 Appeals.

The owner of a building or an owner's duly authorized agent may appeal a decision of the Fire Code Official or the Building Official related to this Section. All appeals shall be directed to the Construction Board of Appeals, in accordance with Chapters 2.30 and 18.02 of the El Paso City Code.

9.52.120 Chapter 27, Hazardous Materials--General Provisions, amended.
International Fire Code, 2009 Edition, Chapter 27, Hazardous Materials—General Provisions, is hereby adopted in its entirety with the following amendments:

9.52.120.1 Section 2703.3.1.1 Records, amended.
International Fire Code, 2009 Edition, Section 2703.3.1.1 Records, is hereby amended to read as follows:

2703.3.1.1 Records.
Any person, firm, or corporation responsible for any unauthorized discharge reportable under subsection 2703.3.1.5(a) shall maintain accurate records of the unauthorized discharge of hazardous materials including the date, time, material, and quantities. Such records shall be kept for at least three years from the date of the unauthorized discharge, and shall be subject to inspection by the fire official upon request. Any person who knowingly falsifies or destroys such records shall be in violation of this code.

9.52.120.2 Section 2703.3.1.5 Response Expenses, added.
International Fire Code, 2009 Edition, Section 2703.3.1.5 Response Expenses, is hereby added to read as follows:

2703.3.1.5 Response Expenses.
Any person or persons causing or responsible for an abandonment or an unauthorized discharge or threatened unauthorized discharge of hazardous materials resulting in emergency action, other than routine investigation by the fire department, the department of environmental services, or any other city department, shall be jointly and severally liable to the city for its reasonably and necessarily incurred expenses, as defined below, resulting from such emergency action. Hazardous materials response expenses are defined as those non-reusable materials and supplies which are required for responding to hazardous materials emergencies and which are actually expended in an emergency action. Hazardous materials response expenses are defined to also include reusable response equipment which is required for responding to hazardous materials emergencies and which is rendered non-reusable during an emergency action due to damage other than by wear and tear. Hazardous materials response expenses shall include overtime expenditures necessary to mitigate the incident. Hazardous materials response expenses shall not include traditional fire department services, such as routine firefighting services.

9.52.120.3 Section 2703.3.1.6 Local reporting requirements, added.
International Fire Code, 2009 Edition, Section 2703.3.1.6 Local reporting requirements, is hereby added to read as follows:

2703.3.1.6 Local reporting requirements.

The fire official shall be immediately notified by the person, firm or corporation responsible when an unauthorized discharge within the city limit boundaries or within the city's extra territorial jurisdictional boundaries, becomes reportable under state, or federal laws or as follows:

a. Any unauthorized discharge of a hazardous material which presents an endangerment to public health, public welfare, or the environment, or any unauthorized discharge of a flammable or combustible material which presents a fire hazard, or any unauthorized discharge of a hazardous material or exposure that results in an injury requiring transport to an off-site medical facility.

b. The person who has care, custody or control of property, materials or equipment shall promptly notify the Fire Official by calling 911 immediately upon discovery of an unauthorized discharge of any hazardous material reportable under subsection 2703.3.1.5(a) above. Immediate notification as required in this section shall be performed prior to or concurrently with necessary initial response actions, but under no conditions shall notification be delayed unnecessarily. At the time of notification the following information shall be provided:

1) What is the location of the incident?
2) Has there been a fire or explosion?
3) Is anyone sick or injured?
4) What is the chemical name or identity of any material involved in the release, if known?
5) If chemical name is unknown are any diamond shaped or other markings visible on the vehicle or container? (colors/names/ numbers/symbols)
6) What type of vehicle or container is involved?
7) What is an estimate of the quantity of material that was released?
8) What was the time and duration of the release?
9) Is there any smoke or vapor cloud visible, audible sounds or unusual odor?
10) The name and telephone number of the person -- or persons to be contacted for further information.

9.52.120.4 Section 2706 Transportation of Hazardous Materials, added.

International Fire Code, 2009 Edition, Section 2706 Transportation of Hazardous Materials, is hereby added to read as follows:

2706
TRANSPORTATION OF HAZARDOUS MATERIALS

2706.1 Standing or parking.

It is unlawful for a motor carrier or operator to allow motor vehicles used to transport hazardous materials to stand or park on any street, alley or lot within the limits of the city, except as provided for in accordance with Section 3406.6.2 of this code, unless the fire official issues a permit allowing such standing or parking. In granting or refusing such permit, the fire official shall be governed by the safety of the area in which the motor vehicle containing the hazardous material or materials is to be parked, and in accordance with 49 CFR 397.3, and as may be amended.

9.52.130 Chapter 33, Explosives and Fireworks, amended.
International Fire Code, 2009 Edition, Chapter 33, Explosives and Fireworks, is hereby adopted in its entirety with the following amendments:

9.52.130.1 Section 3301.1.3 Fireworks, amended.
International Fire Code, 2009 Edition, Section 3301.1.3 Fireworks, is hereby amended to read as follows:

3301.1.3 Fireworks.
Fireworks are declared to be a nuisance. No person shall possess, manufacture, store, sell, handle, or use fireworks within the city limits of El Paso or within 5000 feet beyond the city limits now defined here as the Fireworks Enforcement Zone, except as provided in Sections 9.52.030.14 Required operational permits, as amended, and 9.52.130.19 Explosive storage at blast sites, as amended, of this Chapter.

Except as provided herein, there shall be no variance or exception granted to the prohibition contained in this section. Any prior variance or exception granted to this fireworks ban is hereby discontinued and shall be abated within ninety (90) days of the adoption of this ordinance.

Exception:
The use of fireworks for fireworks displays as allowed in Section 3308.

9.52.130.2 Section 3301.2.4 Financial responsibility, amended.
International Fire Code, 2009 Edition, Section 3301.2.4 Financial responsibility, is hereby amended to read as follows:

3301.2.4 Financial responsibility.
Before a permit is issued, as required by Section 3301.2, the applicant shall file with the jurisdiction a corporate surety bond in the principal sum of $1,000,000 or a public liability insurance policy for the same amount, for the purpose of the payment of all damages to persons or property which arise from, or are caused by, the conduct of any act authorized by the permit upon which any judicial judgment results. The code official is authorized to specify a greater or lesser amount when, in his or her opinion, conditions at the location of use indicate a greater or lesser amount is required. Government entities shall be exempt from this bond requirement. The city shall be named as an additional insured on the insurance policy or an additional obligee under the corporate surety bond, at no cost to the city. A bond required by this section must be executed by a corporate surety and approved by the Fire Official. If applicable, an insurance policy shall be written by an accredited insurance company under the supervision of the Board of Insurance of the state. Evidence of compliance with this requirement shall be considered as having been met when the policy, a copy thereof, or a certificate of insurance has been filed with and approved by the Fire Official. Such policy shall include an endorsement that the Fire Official shall be notified at least thirty (30) days in advance in the event the policy or policies are canceled.

9.52.130.3 Section 3301.2.4.3 Indemnity agreement, added.
International Fire Code, 2009 Edition, Section 3301.2.4.3 Indemnity agreement, is hereby added to read as follows:

3301.2.4.3 Indemnity agreement.
The applicant shall be required to enter into an indemnity agreement with the City indemnifying the City and any of its agents or employees, for any personal injury, property damage or other civil liability whatsoever, caused by an activity, condition or event arising out of any act performed under the permit. The fire official shall provide the approved form for this indemnity agreement.

9.52.130.4 Section 3301.6.1 Immediate Notification, added.
International Fire Code, 2009 Edition, Section 3301.6.1 Immediate Notification, is hereby added to read as follows:

3301.6.1 Immediate Notification.
In case of mechanical failure or traffic accident involving any conveyance carrying explosives, the fire official and the police department shall be notified immediately.

9.52.130.5 Section 3301.7.1 Disposal of explosives, explosive materials or fireworks, added.

3301.7.1 Disposal of explosives, explosive materials or fireworks.
The City may file a Motion with Municipal Court requesting an Order of Disposal and/or Destruction for explosives, explosive materials and/or fireworks pursuant to authority granted by the 2009 International Fire Code, Section 3301.7. Said Motion shall be filed with a sworn affidavit of the Fire Official stating the underlying circumstances of the seizure and the City shall verify that the explosives, explosive materials and/or fireworks are not being held as evidence to be used in any pending case. A hearing shall be held before a judge of the El Paso municipal court. A judge shall, as soon as practicable, hear the matter, after giving reasonable notice to the Fire Official and the person whose explosives, explosive materials and/or fireworks have been removed or impounded. The Fire Official and the person whose explosives, explosive materials and/or fireworks have been removed or impounded shall each have the opportunity to present evidence and make argument on their behalf. The formal rules of evidence do not apply to a hearing under this section.
The judge hearing the case shall make his or her ruling on the basis of a preponderance of the evidence presented at the hearing. If the judge finds that the explosives, explosive materials and/or fireworks were lawfully seized and that, at the time of the hearing, the explosives, explosive materials and/or fireworks constitute materials or other items that cannot be lawfully possessed, stored, handled or used in the jurisdictional limits of the city, the judge shall grant the motion. The decision of the judge is final.

9.52.130.6 Section 3302 Definitions, amended.

International Fire Code, 2009 Edition, Section 3302 Definitions, is hereby amended to add the following definitions:

BLASTER'S LICENSE--A blaster's license is defined as an instrument issued by the *fire code official* authorizing certain individuals to engage in loading, firing, or supervision of the loading or firing of explosive materials in accordance with pertinent ordinances, resolutions and regulations in the city.

FLAME EFFECTS--Flame effects means a device of solid, liquid, or gas, designed specifically to produce an open flame when ignited to display a thermal, physical, visual, or audible phenomenon as defined in NFPA 160. Such devices include paraffin wax candles, LP gas candles, torches, LP-gas burners, and 'sky lantern' type flame illuminated aerial devices.

9.52.130.7 Section 3303.2.1 Blasting records, added.
International Fire Code, 2009 Edition, Section 3303.2.1 Blasting records, is hereby added to read as follows:

3303.2.1 Blasting records.
Records of blasting operations shall contain the following information:
1. A copy of the blasting permit application;
2. A revised copy of the blasting plan containing actual data for the blast;
3. Actual date and time of day of the blast;
4. Weather conditions at the time and location of the blast, if the blast is conducted outdoors; and
5. Ground vibration or airblast records, if required, which shall include the following:
a. Type of instrument, sensitivity and calibration signal or certification of annual calibration;
b. Exact location of instrument and the date, time and distance from the blast;
c. Name of person and firm taking the reading as well as the person analyzing the seismic record; and
d. The vibration and airblast level recorded.

Exceptions: The requirements of #2 and #5 above shall not apply to the following uses of explosives within the city:

A. Blasts under two (2) pounds of explosives in total weight per blast; or

B. Notwithstanding the location of developed property within the jurisdictional area and within one-half (1/2) mile of any boundary of a permitted area, blasts for which the maximum peak particle velocity for ground vibration in inches per second does not exceed 0.50 at the nearest developed property by use of the scaled-distance equation.

9.52.130.8 Section 3307.4 Restricted hours, amended.
International Fire Code, 2009 Edition, Section 3307.4 Restricted hours, is hereby amended to read as follows:

3307.4 Restricted hours.
Blasting operations shall be conducted during daylight hours except when authorized at other times by the fire official. When there is developed property within one-half (1/2) mile of any permit boundary, blasting operations shall be conducted only between the hours of nine (9) a.m. and five (5) p.m. Monday through Saturday. No blasting shall be conducted on Sunday except that the fire official may give special permission for nighttime and Sunday blasting whenever safety considerations so require.

9.52.130.9 Section 3307.16 Permit required, added.
International Fire Code, 2009 Edition, Section 3307.16 Permit required, is hereby added to read as follows:

3307.16 Permit required.
A blasting permit shall be required for the use of explosives or blasting agents, for blasting purposes, at a specified location. A blasting permit shall be renewed upon application for renewal, provided that:
1. The permit fee set forth in Appendix A Fee Schedule below, is submitted along with the application for renewal;
2. The blasting activities at the specified location are anticipated to remain materially unchanged; and
3.The applicant has complied with the requirements of this chapter and Chapter 33 during the preceding year.

3307.16.1 Ongoing Industrial Blasting Applicants.
a. For all blasting permit applicants seeking to conduct ongoing industrial blasting using:
1. Blasts using under two (2) pounds of explosives in total weight;
2. Blasts which do not utilize a blast hole charge into a geologic structure for the purpose of causing rock fragmentation and displacement; or
3. Blasts for which the maximum peak particle velocity for ground vibration in inches per second does not exceed 0.50 at the nearest developed property by use of the scaled-distance equation;
The blasting permit application shall include:
1. Name of operator or operators conducting the blasts;
2. Identification of the anticipated location or locations of blasting activities;
3. Description of conditions, if any, which may cause possible adverse blasting effects;
4. Type of material to be blasted;
5. Number and type of delays to be used;
6. Types of explosives anticipated to be used;
7. Type and length or stemming;
8. Mats or other protection to be used, if any;
b. Where approved by the fire official, ongoing industrial blasting applicants meeting the criteria listed above, shall be exempt from the requirements of Sections 3307.21 Blast Plan; 3307.22 Test Blast; 3307.20 Pre-blast Survey; and 3307.26 Environmental Performance Standards.

3307.16.2 All Others.
All other blasting permit applicants shall submit the following:
1. Name of operator conducting the blast;
2. Approximate date and time of the blast;
3. Location of blast site;
4. Name(s) of licensed blasters on the job;
5. Copy of MSHA Certificate of Training (Form 5000-23) for all personnel involved in the drilling and blasting operation;
6. Copy of Insurance Certificate of Blasting Liability Coverage.
The code official may require additional information.

9.52.130.10 Section 3307.17 Application filed, added.
International Fire Code, 2009 Edition, Section 3307.17 Application filed, is hereby added to read as follows:

3307.17 Application filed.
Only persons who have been granted a Blaster's license under Section 3307.19 may apply for a blasting permit. Applications shall be filed with the code official and accompanied by all documentation required by this chapter and the payment of fees as required. Permits for blasting shall be granted by the code official if he finds that the proposed blasting would not be dangerous to persons or property, considering the location of the proposed work and its distance from buildings, structures, streets, public places or places likely to be frequented by persons or animals; the nature of the soil in the location of the proposed work; the type of explosive and amount of the charge to be used; the manner of doing the work; the prior performance and safety record for blasting work performed in the past at the same site (where applicable); and the skill and experience of the workmen employed and the persons doing the work. Otherwise, the permit shall be refused, and the code official shall state in writing the reason or reasons for the refusal.

9.52.130.11 Section 3307.18 Additional Indemnity required, added.
International Fire Code, 2009 Edition, Section 3307.18 Additional Indemnity required, is hereby added to read as follows:

3307.18 Additional Indemnity required.
The person or company by whom a blaster is employed by or under contract with to perform blasting services, and the owner or owners of the site at which blasting is to take place, shall be required, as a condition of the blasting permit, to enter into an Indemnity agreement as set forth in subsection 3301.2.4.3 of this section.

9.52.130.12 Section 3307.19 Blaster's License requirements, added.
International Fire Code, 2009 Edition, Section 3307.19 Blaster's License requirements, is hereby added to read as follows:

3307.19 Blaster's License requirements.
To qualify for a blaster's license, the applicant must demonstrate that he has had adequate training and experience in the handling and use of explosive material which will be a

minimum of eight hours and shall pass an examination prepared by the fire official. The examination may be written, oral or by such other means as may be necessary to determine the following, which are requirements for the issuance of a license. An applicant for a blaster's license shall:

1. Present positive identification;
2. Be fingerprinted by the police department;
3. Show proof that the applicant has not been convicted of a crime involving moral turpitude. This requirement may be waived by the fire official or the Construction Board of Appeals;
4. Be at least twenty-one years of age;
5. Be in adequate physical and mental condition to perform the work required;
6. Be able to understand and give written and oral directions in the English language;
7. Not be addicted to alcohol or to narcotics and other dangerous drugs;
8. Be qualified by reason of training, knowledge and experience in the field of transporting, storing, handling and use of explosive materials;
9. Have a working knowledge of federal, state and local laws and regulations pertaining to explosive materials; and
10. Have no revoked, suspended or terminated license, or have a revocation, suspension or termination on appeal pursuant to Section 3307.19.10 of this chapter, or any criminal action involving blasting activities pending in a federal, state or municipal court of law.

3307.19.1 Failure to Pass.

If an applicant for a blasting license fails to pass the required examination, he shall not be eligible for reexamination for a period of sixty days. If an applicant fails to pass the required examination at any subsequent time, he shall not be eligible for reexamination for a period of six months following such failure.

3307.19.2 License Fee.

A fee in accordance with Appendix A, Fee Schedule of this code shall be paid for each license application and shall be non-refundable. Annual license renewal fee(s) shall be in accordance with Appendix A, Fee Schedule of this code and not refundable. The applicant must renew the license within thirty days of the date of expiration or he will be required to pass the examination required for such license. The holder of such license shall furnish proof that an eight hour refresher course involving the use of explosives has been taken at least once during the preceding permit year.

3307.19.3 Applicability of License.

A license issued under this chapter shall remain in full force for one year from the date it was issued unless revoked, suspended or terminated by the fire official.

Reexamination may be required by the fire official before a license is renewed should the performance of any individual licensee indicate the need for such reexamination.

3307.19.4 License Transfer Prohibited.

No license shall be re-assigned or transferred.

3307.19.5 Blaster's License--Suspension and Revocation.

All licenses approved under this article are conditioned on all work being performed in faithful and strict compliance with the terms of all federal and state laws, permits, pertinent regulations, ordinances and resolutions of the city. Any violation of such conditions shall be deemed a misdemeanor and be punished in accordance with the city code. Citation for a violation of this chapter shall not preclude suspension or revocation of a license or permit.

3307.19.6 Notice of suspension and revocation.
The fire official may suspend a blaster's license or permit for any violation of the conditions set forth in subsection 3307.19 of this section, pending a hearing by the fire official to determine whether a license or permit should be further suspended or revoked. Reasonable notice of such hearing shall be given to the license holder. For purposes of this section, notice shall be considered given when delivered personally or when received if notice is given by other means, but in no event later than three days after deposit of such notice with the United States postal services, postage fully prepaid, addressed to the last known address of the person to whom the notice is sent. The hearing provided for herein shall be held as expeditiously as reasonably possible.

3307.19.7 Legal Ramifications.
The use of explosives regulated by this chapter during any period of suspension or revocation of a license or permit shall be considered a misdemeanor and punished as provided in the city code.

3307.19.8 Reapplication.
A person whose blaster's license has been revoked may not apply for another license until the expiration of one year from the date of the revocation.

3307.19.9 Hearing.
At any hearing conducted pursuant to this section, the respondent shall have the right to present evidence, to cross-examine available witnesses, to make statements and arguments on his behalf and to be represented by counsel. The technical rules of evidence shall not apply. The fire official shall reach a decision based upon a preponderance of the evidence.

3307.19.10 Appeal.
A person whose license or permit has been suspended or revoked or whose application for a license or permit has been denied may appeal to the Construction Board of Appeals in accordance with Title 2 of the El Paso City Code provided a request for appeal is delivered in writing to the fire official within ten business days after notice of the suspension, revocation or denial of a license or a permit. In the case of a suspension or revocation, the suspension or revocation shall remain in effect until the appeal has been heard and decided.

9.52.130.13 Section 3307.20 Pre-blast Survey, added.
International Fire Code, 2009 Edition, Section 3307.20 Pre-blast Survey, is hereby added to read as follows:

3307.20 Pre-blast Survey.
Subject to the exceptions as set forth in Sections 3307.16.1(b) and 3303.2.1, a pre-blast survey shall be required of any structure(s) that might later be the basis for blast damage claims or whenever a survey is required by the fire official.

3307.20.1 Notification.
The owner or residents of such buildings must be contacted by letter at least sixty days before the start of blasting, notifying them of the pre-blast survey and how they may request a copy of the pre-blast survey. The contractor shall employ an independent professional engineer licensed in the state of Texas and capable of conducting a pre-blast survey, in accordance with the Blasting Guidance Manual (U.S. Dept. of Interior, Office of Surface Mining), to determine and note any pre-existing structural or cosmetic defects to nearby structures that might later be the basis for damage claims.

3307.20.2 Written Report.
A written report of the survey shall be signed by the person conducting the survey and provided to the fire official, at least two working days prior to any blasting to be filed with the permit. Copies shall be made available to regulatory agencies and persons requesting the survey. Application fees may be charged for reproduction of the survey.

9.52.130.14 Section 3307.21 Blast Plan, added.
International Fire Code, 2009 Edition, Section 3307.21 Blast Plan, is hereby added to read as follow:

3307.21 Blast Plan.
Subject to the exceptions set forth in subsection 3307.16.1(b) of this code, prior to commencing drilling or blasting operations, the contractor shall submit for approval, a written Blast Plan with all pertinent data to include the following:
1. Date and time of blast;
2. Type of explosives to be used;
3. Total pounds of explosives to be used for each blast;
4. Diagram showing number of holes and typical hole load;
5. Burden, spacing, depth and diameter of holes and stemming used;
6. Pre-blast and All Clear Signal plan;
7. Technical data and Material Safety Data Sheets for all explosives used;
8. Fire sequence diagram, delay sequence and maximum pounds per delay;
9. Blast location and distance of blast from any structure(s) of concern; and
10. Seismograph data.

The contractor shall also submit a Blast Plan, for approval, any time he plans to make a change such as drill pattern, maximum pounds per delay, delay sequence, explosive type, etc. Every Blast Plan must be approved by the fire official before drilling and blasting operations can begin. There might be extenuating circumstances, such as quarry operations, where the fire official can, at his discretion, allow the contractor to make certain changes without submitting another proposal. The contractor must however note

any changes, showing date, and type of changes made, and keep this as part of the permanent record.

9.52.130.15 Section 3307.22 Test blast, added.
International Fire Code, 2009 Edition, Section 3307.22 Test blast, is hereby added to read as follows:

3307.22 Test blast.
Subject to the exceptions set forth in subsection 3307.16.1(b) of this code, before regular production blasting can begin the contractor shall make a test blast to ensure that vibrations are within safe limits, and the rock is adequately fragmented to ensure excavation. This will require the contractor to actually dig this test blast. During the test blast an Independent Blast Monitoring Engineer shall place multiple seismographs, in such an array as to determine vibration levels, frequency range, and Scaled Distance.

9.52.130.16 Section 3307.23 Stemming material, added.
International Fire Code, 2009 Edition, Section 3307.23 Stemming material, is hereby added to read as follows:

3307.23 Stemming material.
Crushed rock (not pea gravel) shall be used for stemming blast holes. A guide to ideal rock sizes is as follows:

TABLE INSET:

Hole dia.	Rock size
1 1/2" holes	3/8" minus
2"--3 1/2" holes	3/8"-- 1/2"
4"--5" holes	5/8"
5" and above	3/4" minus

9.52.130.17 Section 3307.24 Relief trenches, added.
International Fire Code, 2009 Edition, Section 3307.24 Relief Trenches, is hereby added to read as follows:

3307.24 Relief trenches.
If it is not possible to keep vibrations within acceptable levels, the fire official can require that a 12" minimum width trench between the blast and affected structures be dug. The trench must be excavated and free of debris and water, to a depth of at least 2 feet below any blast holes being fired in a given lift. No blast holes can be located within a distance from the trench of 1.7 times the blast hole diameter converted to feet. Example: If the hole diameter is 3 inches, the nearest a blast hole could be located to a trench is 5 feet (round off to the nearest foot).

9.52.130.18 Section 3307.25 Explosive storage at blast sites, added.
International Fire Code, 2009 Edition, Section 3307.25 Explosive storage at blast sites, is hereby added to read as follows:

3307.25 Explosive storage at blast sites.
All explosives must be stored in accordance with Federal, State and Local laws and all magazines must be inspected and approved by ATF, or MSHA. The quantity of explosives on the blast site shall be subject to approval by the fire official, and no more than a one (1) day supply of explosives shall be stored on the blast site at any time. Explosives cannot be stored on the blast site when no blasting operations are ongoing.

9.52.130.19 Section 3307.26 Environmental Performance Standards, added.
International Fire Code, 2009 Edition, Section 3307.26 Environmental Performance Standards, is hereby added to read as follows:

3307.26 Environmental Performance Standards.
[Subject to the exceptions set forth in subsection 3307.16.1(b) of this code.]

3307.26.1 Blast monitoring and video recording requirements.
The contractor shall monitor each blast. Permanently installed "constant recording" instruments can be set-up that will record any event of a recordable magnitude, as long as they meet the following criteria:
1. Three seismic and one acoustic channel;
2. Selectable seismic and acoustic trigger levels;
3. Analyze velocity, acceleration, displacement and resultant;
4. Measure both linear and A-weighted sound;
5. 10 inches sound recording range;
6. Selectable maximum recording range;
7. Response 2--200 hertz;
8. Full waveform memory storage;
9. OSM/USBM charts printed; and
10. Adjustable record duration.

3307.26.2 Seismograph.
The seismogram recorded for each blast will be included with the shot report as part of a permanent record. The contractor shall place a sufficient number of seismographs to record required data during the blast(s).

3307.26.3 Video.
The contractor will also videotape each blast. The date, time, and number of holes shall be noted visually or vocally, and the videotapes shall be retained as part of the permanent record of the blast(s).

3307.26.4 Near by structures.

If the job is too critical as far as nearby structures are concerned, an independent Blast Monitoring Firm must be employed to monitor all blasts that might affect the structure(s). The blast monitors shall be in compliance with the above criteria.

3307.26.5 Ground vibrations.

Ground vibrations shall be limited as follows:

1. Whenever there is developed property within one-half mile of any boundary of a permitted area, the maximum peak particle velocity, as measured by seismographic monitoring, is not to exceed the recommended vibration limits presented in USBM Report RI 8507 by D.E. Siskind, M.S. Stagg, J.W. Kopp, and C.H. Dowding (U.S. Dept. of Interior), and a computerized response versus frequency technique known as Response Spectrum Velocity Profile (RSVP).
2. Whenever there is no developed property within one-half mile of any boundary of the permitted area, the scaled distance formula may be used:

W=(D/Ds)2

Where "W" = the maximum weights of explosives, in pounds, Where "D" the distance, in feet, from the blasting site to the nearest developed property, and Where "Ds" is always equal to 70 ft/lb.

3. Vibration Limits. Blasting vibrations can cause "threshold" damage to residential structures when the energy is within the frequency range of 4 - 12 hertz. Within this frequency range a 0.5 inch per second maximum particle velocity, at the structure, is required to preclude any threshold damage. Above 12 hertz the allowable vibration increases as the frequency increases, up to 40 hertz. Above 40 hertz the maximum allowable vibration is 2.0 inches per second maximum particle velocity, at the structure. In order to determine the potential effects of vibrations versus frequency, the blast monitor must be capable of presenting a Response Spectrum Velocity Profile (RSVP). This is also referred to as the OSM/USBM, or USBM RI 8507 & OSMRE Analysis (in./sec.). The OSM/USBM should appear on the Blast Monitor Record, and a copy of this seismic data included with each blast report given to the fire official.

3307.26.6 Air blast levels.

Efforts should be made to keep air blast levels to one hundred ten (110) DBL (2 Hz high-pass)-anywhere along the permit boundary in order to reduce annoyance and complaints as much as possible. Monitoring for this parameter must include a microphone in the downwind direction. Air blast shall however, be limited to the following safe maximum levels:

TABLE INSET:

Lower Frequency Limit of Meas. sys. (Hz)	Max level in dB
0.1 Hz or lower--flat response*	134 dB peak
0.2 Hz or lower--flat response	133dB peak
0.6 Hz or lower--flat response	129dB peak
C-weighted--slow response*	105dB peak

* Only when approved by the fire official.

9.52.130. 20 Section 3308.2 Permit application, amended.
International Fire Code, 2009 Edition, Section 3308.2 Permit application, is hereby amended to read as follows:

3308.2 Permit application.
Application for permits shall be made in writing to the fire official at least 10 days in advance of the date of display. Prior to issuing permits for fireworks display, plans for the display, inspections of the display site, and demonstrations of the display operations shall be approved.

9.52.130.21 Section 3308.2.3 Indoor displays, added.
International Fire Code, 2009 Edition, Section 3308.2.3 Indoor displays, is hereby added to read as follows:

3308.2.3 Indoor displays.
If pyrotechnics are used inside a building, the building must contain a complete operational fire-sprinkler system or provide personnel to implement a standby fire watch acceptable to the fire official.

9.52.130.22 Section 3309 Temporary Storage of Consumer Fire Works, deleted.
International Fire Code, 2009 Edition, Section 3309 Temporary Storage of Consumer Fire Works, is hereby deleted in its entirety.

9.52.130.23 Section 3310 Flame Effects, added.
International Fire Code, 2009 Edition, Section 3310 Flame Effects, is hereby added to read as follows:

3310
FLAME EFFECTS

3310.1 General.
The use of flame effects for entertainment, exhibition, demonstration, or simulation must comply with NFPA 160.

3310.2 Permit application.
Prior to issuing permits for flame effects, plans for the exhibition, inspections of the exhibition site, and demonstrations of the flame effects shall be approved by the code official.

3310.3 Indoor use.
If flame effects are used inside a building, the building must contain a complete operational fire-sprinkler system or provide personnel to implement a standby fire watch acceptable to the *fire code official.*

3310.4 Financial Responsibility.

Before a permit is issued for any flame effects exhibition, the applicant must provide evidence of financial responsibility as set forth in section 3301.2.4.

3310.5 Texas flame effects operator's license required.
At least one Texas flame effects licensee must be present on-site at all times where flame effects are used, discharged, or ignited.

9.52.140 Chapter 34, Flammable and Combustible Liquids, amended.
International Fire Code, 2009 Edition, Chapter 34, Flammable and Combustible Liquids, is hereby adopted in its entirety with the following amendments:

9.52.140.1 Section 3405.3.8.2 Location on property, exception added.
International Fire Code, 2009 Edition, Section 3405.3.8.2 Location on property, exception #3 added to read as follows:

3. Mobile fueling dispensing activities shall not be conducted within 30 feet (9144 mm) of buildings, building openings, combustible materials, lot lines, public alleys or public ways.

9.52.140.2 Section 3406.1.2 Restricted Locations, added.
International Fire Code, 2009 Edition, Section 3406.1.2 Restricted Locations, is hereby added to read as follows:

3406.1.2 Restricted Locations.
It is unlawful for any individual, firm, partnership or corporation within the city limits, to install, enlarge or operate a bulk oil station, refinery, or distilling plant, except when such places conform in location and construction and maintain distances and safeguards as hereinafter specified. All storage of oils and gasoline in Classes I and II for the purpose of refining, or distilling or jobbing, or wholesaling, and handled by motor vehicles for delivery, must be installed within the below specified districts, as hereafter designated.

9.52.140.3 Section 3406.1.3 Designated Districts, added.
International Fire Code, 2009 Edition, Section 3406.1.3 Designated Districts, is hereby added to read as follows:

3406.1.3 Designated Districts.
The districts in which refineries, wholesale oil stations, or bulk stations may be located are described as follows:

3406.1.3.1 Beginning at the centerline of Durazno Avenue and the centerline of Ledo Road southerly to the north line of Rosa Avenue; thence easterly three hundred seventy-five feet in a straight line; thence northerly to the centerline of Durazno Avenue; thence westerly to the point of beginning, to include Ritchie Distributing Company, 4700 Durazno Avenue.

3406.1.3.2 Beginning at the intersection of Texaco Road and the north line of Southern Pacific Railroad tracks; thence westerly along the railroad tracks to the east line of Clark Road, thence north along the east line of Clark Road to the south line of Welch Avenue; thence easterly along the south line of Welch Avenue to the south line of Tampa Avenue; thence east along the south line of Tampa Avenue to the west line of the Western Refining South Plant; thence northerly along the west line of Western Refining South Plant to the west line of the Western Refining North Plant; thence northerly along the west line of the Western Refining North Plant to the south line of Gateway Boulevard East; thence easterly along the south line of Gateway Boulevard East to the east line of Airway Boulevard; thence northerly along the east line of Airway Boulevard to the south line of Viscount Boulevard; thence easterly along the south line of Viscount Boulevard to the east line of the Trans Mountain Oil Co.; thence southerly along the east line of the Trans Mountain Oil Co. to the north line of Gateway Boulevard West; thence westerly along the north line of Gateway Boulevard West to the east line of Airway Boulevard; thence south along the east line of Airway Boulevard to the south line of Gateway Boulevard East; thence easterly along Gateway Boulevard East to the east line of Hawkins Road; thence southerly along the east line of Hawkins Road to the east line of Phelps Dodge Refinery; thence southerly along the east line of Phelps Dodge Refinery to the south line of Phelps Dodge Refinery; thence westerly along the south line of Phelps Dodge Refinery to the east line of Western Refining North spur track; thence southerly along the east line of the spur track to the north line of Southern Pacific Railroad track; thence westerly along the north line of Southern Pacific Railroad tracks to the point of beginning to include Western Refining South Plant, Western Refining North Plant, Trans Mountain Oil Co., Navajo Oil and all property contained within the boundary specified in this section.

3406.1.3.3 Beginning at the intersection of the centerline of Lafayette Drive and the centerline of San Paulo Drive westerly to the east side of Lot 7, Block 28; thence northerly to the south line of Lot 1, Block 39; then easterly to the centerline of Lafayette Drive; thence southerly to the point of beginning, to include the Municipal Service Center.

3406.1.3.4 Beginning at a point marked by the intersection of the centerline of Beech Street and the northerly right-of-way line of Boeing Drive; thence westerly along the centerline of the Boeing Drive separation median to a point on the east line of Lot 24, Block 4, El Paso International Airport Tracts; then northerly along the east line of Lot 24, Block 4, extended to a point on the south edge of a fifty-foot wide service taxiway; thence westerly along the south edge of the taxiway to a point opposite the easterly line of Lot 10, Block 4, El Paso International Airport Tracts, extended; thence southwesterly to and along the said easterly line of Lot 10, Block 4, to a point lying one hundred twenty-five feet northerly of the north right-of-way line of Boeing Drive; thence northwesterly perpendicular to the above line across Lot 10, Block 4, to a point lying in the westerly line of the Lot 10, Block 4; thence westerly to a distance of two hundred seventy-five feet to a point lying seventy-five feet north of the northerly right-of-way line of Boeing Drive and being within Lot 9, Block 4, El Paso International Airport Tracts; thence northerly through the remainder of Lot 9, Block 4, and through Lot 8, Block 4, to

a point being the southeasterly corner of Lot 6, Block 4, El Paso International Airport Tracts; thence northeasterly across Lot 5, Block 4, to a point being the northeasterly corner of Lot 4, Block 4, El Paso International Airport Tracts; thence northeasterly through the approximate centers of Lots 1 and 2, Block 4, El Paso International Airport Tracts to a point lying in the northeasterly right-of-way line of Northrup Road; thence northwesterly along the right-of-way line of Northrup Road to a point in the southerly right-of-way line of American Drive; thence northeasterly along the southerly right-of-way line of American Drive to a point in the southwesterly right-of-way line of Convair Road; thence southeasterly along the right-of-way line of Convair Road and along an extension of said line for a total distance of seven hundred feet to a point; thence perpendicular to the above line northeasterly a total distance of two hundred fifty feet to a point; thence perpendicular to the above line northwesterly to a point; the point being an intersection of this line with the northerly right-of-way line of Convair Road extended; thence westerly along the northerly right-of-way line of Convair Road extended to an intersection with a line being an extension of the east line of Taxiway "A"; thence north along said extension of the east line of Taxiway "A" to a point being on the southeasterly line of Runway 4-22; thence northeasterly along the southeasterly line of Runway 4-22 to an intersection with the south line of the Runway 8-26 (left) stopway; then easterly along said south line of the Runway 8-26 (left) stopway to an intersection with the easterly line of Taxiway "M" thence southeasterly along the easterly line of Taxiway "M" to an intersection with the north line of Military Cargo Apron; then easterly along the north line of the Military Cargo Apron and along an extension of said line for a distance of approximately one thousand one hundred fifty feet to a point; thence northeasterly parallel to the northerly property line of Block 17, El Paso International Airport Tracts for a distance of approximately one thousand eight hundred feet to a point; thence easterly to a point lying in the extended easterly property line of Lot 8, Block 17, El Paso International Airport Tracts, the point also being one hundred twenty-five feet north of the northwest corner of the Lot 8, Block 17; thence southerly to a point being the northwesterly corner of Lot 9, Block 17 (FAA Tower Site); thence westerly to a point being the midpoint of the east line of Lot 6 and the west line of Lot 7, Block 17, El Paso International Airport Tracts; thence southwesterly on a line intersecting the midpoints of the lot lines through Lots 6, 5, 4 and 3 and the line extended straight across Lots 1 and 2 to an intersection with the northerly right-of-way line of Boeing Drive; thence westerly along the northerly right-of-way line of Boeing Drive to the point of beginning; all of which has been laid out and marked on the plat entitled "El Paso International Airport Wholesale Gasoline and Fuel District" and dated April 11, 1968.

3406.1.3.5 A portion of Lots 7 and 8, Block 17, El Paso International Airport Tracts, Units 9, El Paso County, Texas, being more particularly described by metes and bounds as follows to wit; from a point, said point being the common southerly corner of Lots 6 and 7, Block 17, El Paso International Airport Tracts, Unit 9, the point also lying in the northerly right-of-way line of Centurion Drive; thence along the northerly right-of-way line of Centurion Drive 30.00 feet along the arc of a curve to the right, whose central angle is 3°11'00" whose radius is 540.12 feet and whose chord bears North 69°43'31" East a distance of 30.01 feet to a point, said point lying on the northerly right-of-way line of Centurion Drive, said point also being the point of beginning; thence North 21°51'59"

West a distance of 264.79 feet; thence North 81°10'07" East a distance of 402.14 feet; thence South 8°49'53" East a distance of 250.00 feet to a point, the point lying on the northerly right-of-way line of Centurion Drive; thence South 81°10'07" West continuing along the northerly right-of-way line of Centurion Drive a distance of 250.00 feet; thence continuing along the northerly right-of-way line of Centurion Drive 92.87 feet along the arc of a curve to the left, whose central angle is 9°51'06" whose radius is 540.12 feet and whose chord bears South 76°14'34" West a distance of 92.76 feet to the point of beginning and containing in all 2.148 acres of land, more or less, to include Chevron Oil Products.

9.52.140.4 Section 3406.5.4.5 Commercial, industrial, governmental or manufacturing, amended.
International Fire Code, 2009 Edition, Section 3406.5.4.5 Commercial, industrial, governmental or manufacturing, paragraphs 1, 2, and 6, are hereby amended to read as follows:

3406.5.4.5 Commercial, industrial, governmental or manufacturing.
1. Dispensing shall occur only at sites that have been permitted to conduct mobile refueling as per IFC section 105.6, as amended by 9.52.030.11 of this code.
2. The representative of a mobile fueling operation shall provide to the jurisdiction a written response plan which demonstrates readiness to respond to a fuel spill and carry out appropriate mitigation measures, and describes the process to dispose properly of contaminated materials.
6. Mobile fueling operations shall not take place within 30 feet of buildings, property lines or combustible storage.

9.52.140.5 Section 3406.5.1.11 Switch loading, exception added.
International Fire Code, 2009 Edition, Section 3406.5.11 Switch loading, exception is hereby added to read as follows:

Exception: Switch loading is permitted when all precautions and practices are met in accordance with API, RP 2003 -- 1998 Protection Against Ignitions Arising out of Static, Lightning, and Stray Currents.

9.52.140.6 Section 3406.6.1.3 Vehicle motor shutdown, exception added.
International Fire Code, 2009 Edition, Section 3406.6.1.3 Vehicle motor shutdown, exception is hereby added to read as follows:

Exception: Tank vehicles where the operator carries and can utilize a remote emergency shut-off device which, when activated, immediately causes flow of fuel from the tank vehicle to cease.

9.52.150 Chapter 38, Liquefied Petroleum Gases, amended.
International Fire Code, 2009 Edition, Chapter 38, Liquefied Petroleum Gases, is hereby adopted in its entirety with the following amendments:

9.52.150.1 Section 3801.1 Scope, amended.
International Fire Code, 2009 Edition, Section 3801.1 Scope, is hereby amended to read as follows:

3801.1 Scope.
Storage, handling and transportation of LP-gas and the installation of LP-gas equipment pertinent to systems for such uses shall comply with this chapter, The Railroad Commission of Texas - Liquified Gas Safety Rules and NFPA 58. Properties of LP-gases shall be determined in accordance with Appendix B of NFPA 58.

9.52.150.2 Section 3803.2.1.7 Use for food preparation, amended.
International Fire Code, 2009 Edition, Section 3803.2.1.7 Use for food preparation, is hereby amended to read as follows:

3803.2.1.7 Use for food preparation (In buildings).
Where approved by the *fire code official*, listed LP-gas food service appliances are allowed to be used for food-preparation for special events and in attended commercial food-catering operations in accordance with the International Fuel Gas Code, the International Mechanical Code, NFPA 58, and the Texas Railroad Commission Liquefied Petroleum Gas Safety Rules.

9.52.150.3 Section 3804.2 Maximum capacity within established limits, amended.
International Fire Code, 2009 Edition, Section 3804.2 Maximum capacity within established limits, is hereby amended to read as follows:

3804.2 Prohibited storage within established limits.
Within the limits of the fire district(s), as described in Chapter 18.08 of the City Code, it shall be unlawful for any person, whether as owner, partner, lessee, manager or agent, to construct maintain or operate any tank or other equipment for the storage or dispensing of liquefied petroleum gases, or to store, transport or dispense the same.

9.52.150.4 Section 3804.2 Maximum capacity within established limits, exception deleted.
International Fire Code, 2009 Edition, Section 3804.2 Maximum capacity within established limits, the exception is deleted in its entirety.

9.52.150.5 Section 3805.3 Natural gas service, added.
International Fire Code, 2009 Edition, Section 3805.3 Natural gas service, is hereby added to read as follows:

3805.3 Natural gas service.
LP-gas shall not be used in lieu of natural gas to fuel any gas-fueled appliances in any building, residence, or manufactured home located within 300 feet of a natural gas line.

Exceptions:

1. LP-gas fueled-cooking devices operated outdoors.

2. Buildings, residences, and manufactured homes properly equipped with LP-gas appliances prior to December 14, 2004, the date of adoption of the 2003 International Fire Code with amendments.

9.52.160 Chapter 47, Referenced Standards, amended.
International Fire Code, 2009 Edition, Chapter 47, Referenced Standards, is hereby adopted in its entirety with the following amendments:

9.52.160.1 Section API, RP 2003-(1998) Protection Against Ignitions Arising out of Static, Lightning and Stray Currents, amended.
International Fire Code, 2009 Edition, Section API, RP 2003-(1998) Protection Against Ignitions Arising out of Static, Lightning and Stray Currents, is hereby amended to read as follows:

Section 3406.5.1.11 is added to the "Referenced in code section number".

9.52.170 Appendix A, Board of Appeals, deleted and replaced with new Appendix A.
International Fire Code, 2009 Edition, Appendix A, Board of Appeals is deleted in its entirety and replaced with Appendix A, Fee Schedule, to read as follows:

Appendix A
FEE SCHEDULE

A101 License Fees.
A101.1 The Fire Official is authorized to charge a separate fee for each license and permit required by this code in the amount identified in the adopted budget resolution for the current fiscal year or other appropriately adopted resolution by the City Council. When hourly rates are specified in the budget resolution or other appropriately adopted resolution by the City Council, the minimum charge shall be as specified in the resolution. There shall be no reduction in the hourly rate based on services performed taking less than the full hour.
Within the ordinance, budget resolution, application forms, and adopted IFC and amendments, the term license may be also identified by and interchanged with the term permit.

A101.2 Hazardous Materials.
A.When a license for hazardous materials is required by International Fire Code Section 105.6, as amended by 9.52.030.11 this code, for a facility, the owner or operator of such facility shall pay a license fee as identified in the adopted budget resolution for the current fiscal year or other appropriately adopted resolution by the City Council.
B. Temporary Workplaces: When a hazardous materials license is issued for a facility, such location may have temporary workplaces at locations outside of the facility for which the license was issued, provided that such temporary workplaces are listed on the chemical description sheet submitted with the license application or on other forms designed by the Fire Department. Licensees shall submit to the El Paso Fire Department

any changes in the location of temporary workplaces and receive approval of such changes by the El Paso Fire Department prior to using such temporary workplaces. To qualify as a temporary workplace the location shall have fewer than twenty-five reportable chemicals and shall be staffed less than twenty hours a week. Additional licenses shall not be required for temporary workplaces.

A102 Reinspection fees.
For any re-inspection required because the facility and/or fire system failed to comply with this code or because the work was not ready for the inspection as requested; or the request is for a partial inspection, partial acceptance and/or phase inspection a fee shall be in an amount identified in the adopted budget resolution for the current fiscal year or other appropriately adopted resolution by the City Council. Inspections conducted by fire fighting companies requiring a Fire Inspector follow-up shall be assessed a re-inspection fee in an amount identified in the adopted budget resolution for the current fiscal year or other appropriately adopted resolution by the City Council.

A103 Investigation/Inspection fees.
For any investigation or inspection which is not a part of a regular license or permit program, whether during regular duty hours or at a time other than regular duty hours, the fee shall be identified in the adopted budget resolution for the current fiscal year or other appropriately adopted resolution by the City Council. Said fee may be in addition to any other required fees.

A104 Fire Watch/Standby.
The Fire Official, as defined in the IFC, shall have authority to require a fire-watch, as defined by the section 202 IFC. Fire watch personnel shall be referred to as fire guards, and shall comply with NFPA 601, Standard for Security Services in Fire Loss Prevention. If El Paso Fire Department personnel function as fire guards, whether during regular duty hours or other than regular duty hours, a fee shall be assessed in an amount identified in the adopted budget resolution or other appropriately adopted resolution by the City Council for the current fiscal year. Fire guards shall not be assigned to other duties that will interfere with their fire watch function.

A105 Site Assessments/ Non-regulatory Inspections.
Inspections that are outside the regulation of the International Fire Code or an ordinance of the City of El Paso, and are not initiated by the El Paso Fire Department, shall be assessed a fee as specified in the adopted budget resolution for the current fiscal year or other appropriately adopted resolution by the City Council. Such inspections include those requested in order to comply with an applicable government regulation, or which are solely for the purpose of consulting or pre-construction guidance. Home fire safety inspections shall be offered without charge.

A106 Commercial Safety Training.
Commercial for-profit entities requesting fire safety training to comply with applicable government regulation shall be assessed a fee as specified in the adopted budget

resolution or other appropriately adopted resolution by the City Council for the current fiscal year.

A107 Fire Protection Systems.
A fee shall be assessed in an amount identified in the adopted budget resolution for the current fiscal year or other appropriately adopted resolution by the City Council for the plan review and a separate fee shall be assessed for all fire protection systems initial acceptance tests/site inspections exclusive to El Paso Fire Department review. Fire protection systems failing inspection, in whole or in part, shall be assessed a re-inspection fee in an amount identified in the adopted budget resolution for the current fiscal year or other appropriately adopted resolution by the City Council.

A108 Building Permit Fire Finals.
Fire final inspections for building permits shall be assessed a fee in an amount identified in the adopted budget resolution for the current fiscal year or other appropriately adopted resolution by the City Council.

A109 Expedited Services Fees.
A fee shall be assessed for expedited inspections, customized plan review, and plans reviewed by appointment upon request in an amount identified in the adopted budget resolution for the current fiscal year or other appropriately adopted resolution by the City Council. Such services shall be subject to availability and the approval of the Fire Official.

9.52.180 Appendix B, Fire-Flow Requirements For Buildings, adopted and amended.
International Fire Code, 2009 Edition, Appendix B, Fire-Flow Requirements For Buildings, is hereby adopted in its entirety with the following amendments:

9.52.180.1 Section B105.3 Fire-Flow requirements for private fire hydrants, added.
International Fire Code, 2009 Edition, Section B105.3 Fire-Flow requirements for private fire hydrants, is hereby added to read as follows:

B105.3 Fire-Flow requirements for private fire hydrants.
The minimum required Fire Flow for private fire hydrants shall be 1000 gallons per minute (gpm) for one hour duration.

9.52.180.2 Section B105.4 Fire-Flow data, added.
International Fire Code, 2009 Edition, Section B105.4 Fire-Flow data, is hereby added to read as follows:

B105.4 Fire-Flow data.
The water flow test data shall only be valid if the required data is obtained within three years from the date plans are submitted to the *fire code official.*

9.52.190 Appendix C, Fire Hydrant Locations and Distribution, adopted and amended.
International Fire Code, 2009 Edition, Appendix C, Fire Hydrant Locations and Distribution, is hereby adopted in its entirety with the following amendments:

9.52.190.1 Section C104.2 Existing private fire hydrants, added.
International Fire Code, 2009 Edition, Section C104.2 Existing private fire hydrants, is hereby added to read as follows:

C104.2 Existing private fire hydrants.
Existing private fire hydrants on adjacent properties shall not be considered available.

9.52.190.2 Section C105.1 Hydrant spacing, amended.
International Fire Code, 2009 Edition, Section C105.1 Hydrant spacing, is hereby amended to read as follows:

C105.1 Minimum number of hydrant requirements.
The minimum number of hydrants required shall be determined by the fire-flow requirements referenced in Table C105.1, as amended. The requirements regarding the average spacing between hydrants and the maximum distance from any point on street or road frontage to a hydrant are found in IFC Chapter 5 Fire Service Features and Appendix D Fire Apparatus Access Roads.

Exception: The *fire code official* is authorized to accept a deficiency of up to 10 percent where existing fire hydrants provide all or a portion of the required fire hydrant service.

9.52.190.3 Table C105.1 Number and distribution of fire hydrants, amended.
International Fire Code, 2009 Edition, Table C105.1 Number and distribution of fire hydrants, is hereby amended to read as follows:

TABLE C105.1 – NUMBER AND DISTRIBUTION OF FIRE HYDRANTS

FIRE-FLOW REQUIREMENT (gpm)	MINIMUM NUMBER OF HYDRANTS
1,700 OR LESS	1
2,000 – 2,250	2
2,500	3
3,000	3

3,500 – 4,000	4
4,500 – 5, 000	5
5,500	6
6,000	6
6,500 – 7,000	7
7,500 or more	8 OR MORE [e]

For SI: 1 foot = 304.8 mm, 1 gallon per minute = 3.785 L/m.

a. Reduce by 100 for dead-end streets or roads.

b. Where streets are provided with median dividers which cannot be crossed by fire fighters pulling hose lines, or where arterial streets are provided with four or more traffic lanes and have a traffic count of more than 30,000 vehicles per day, hydrant spacing shall average 500 feet on each side of the street and be arranged on a alternating basis up to a fire-flow requirement of 7, 000 gallons per minute and 400 feet for higher fire-flow requirements.

c. Where new water mains are extended along streets where hydrants are not needed for protection of structures or similar fire problems, fire hydrants shall be provided at spacing not to exceed 1,000 feet to provide for transportation hazards.

d. Reduce by 50 feet for dead-end streets or roads.

e. One hydrant for each 1,000 gallons per minute or fraction thereof.

9.52.200 Appendix D, Fire Apparatus Access Roads, adopted and amended.
International Fire Code, 2009 Edition, Appendix D, Fire Apparatus Access Roads, is hereby adopted in its entirety with the following amendments:

9.52.200.1 Section D103.1 Access road width with a hydrant, amended.
International Fire Code, 2009 Edition, Section D103.1 Access road width with a hydrant, is hereby amended to read as follows:

D103.1 Access road width with a hydrant.
Where a fire hydrant is located on a fire apparatus access road, the minimum road width shall be 28 feet (8534 mm). See Figure D103.1

9.52.200.2 Figure D103.1 Dead-End Fire Apparatus Access Road Turnaround, amended.
International Fire Code, 2009 Edition, Figure D103.1 Dead-End Fire Apparatus Access Road Turnaround, is hereby amended to be depicted as follows:

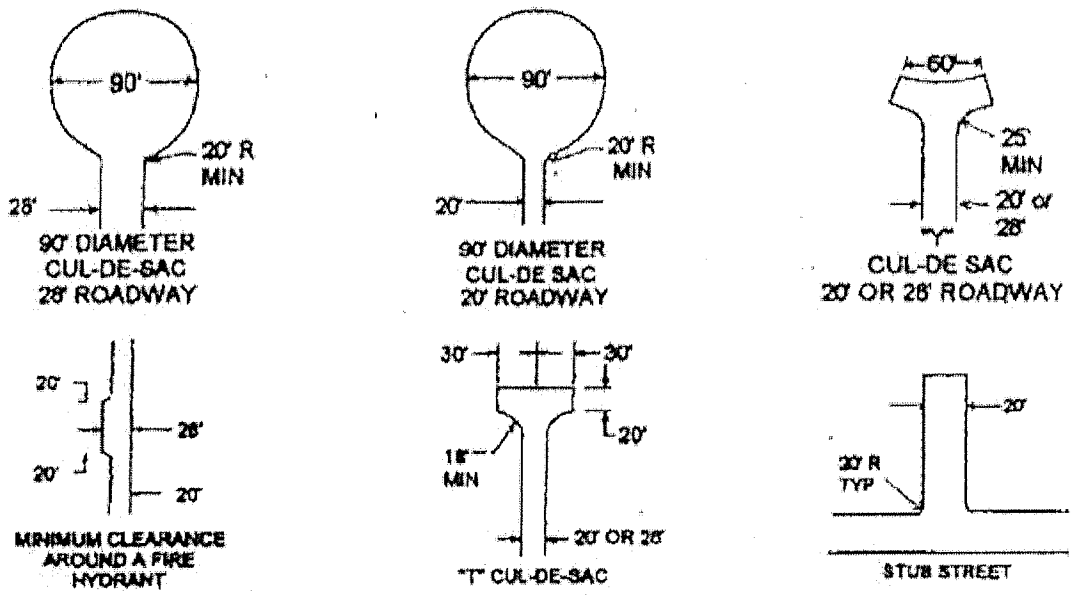

Figure D103.1
Dead-End Fire Apparatus Access Road Turnaround

9.52.200.3 Section D103.2 Grade, amended.
International Fire Code, 2009 Edition, Section D103.2 Grade, is hereby amended to read as follows:

D103.2 Grade.
Fire apparatus access roads shall not exceed 11 percent in grade.
Exception: Grades steeper than 11 percent as approved by the fire chief, but not to exceed 15 percent.

9.52.200.4 Section D103.4 Dead ends, amended.
International Fire Code, 2009 Edition, Section D103.4 Dead ends, is hereby amended to read as follows:

D103.4 Dead ends.
Dead-end fire apparatus access roads in excess of 250 feet (76.2 m) shall be provided with width and turnaround-provisions in accordance with Table 103.4.

9.52.200.5 Table 103. 4 Requirements For Dead-End Fire Apparatus Access Roads, amended.
International Fire Code, 2009 Edition, Table 103.4 Requirements For Dead-End Fire Apparatus Access Roads, is hereby amended to read as follows:

Length (feet)	Width (feet)	Turnarounds required
0-250	20	None required
251-300	20	60 feet "T cul-de-sac", 60 feet "Y" or 90 feet diameter cul-de-sac in accordance with Figure D103.1
301-600' See Note 1	20	90 feet diameter cul-de-sac in accordance with Figure D103.1
Over 600' See Note 1	Special approval required	Special approval required

Note 1 - Intermediate turnarounds will be required, spaced at a maximum distance of 600' apart.

9.52.200.6 Section D103.5 Fire apparatus access road gates, paragraph #1, amended.
International Fire Code, 2009 Edition, Section D103.5 Fire apparatus access road gates, paragraph #1 is hereby amended to read as follows:

1. The minimum gate width shall be 20 feet or if a median or guard post are present, two adjacent gates shall be allowed, the minimum width of each adjacent gate shall not be less than 13 feet. The portion(s) reduced to 13 ft width shall not exceed 20 feet in length.

9.52.200.7 Section D103.6 Signs, amended.
International Fire Code, 2009 Edition, Section D103.6 Signs, is hereby amended to read as follows:

D103.6 Signs and markings.
Where required by the *fire code official*, fire apparatus access roads shall be marked, at the expense of the owner, with permanent NO PARKING AT ANY TIME--FIRE LANE signs. Such signs shall be of standard size, color, lettering and mounting complying with El Paso City Code, Title 19, Subdivision Ordinance – Design Standards for Construction.. Placement of fire lane signage shall meet the following:
1. One sign shall be posted at each end of an official fire lane. Each sign shall have a single head arrow showing the appropriate direction of the fire lane.
2. A fire lane longer than 100 ft. shall have intermediate signs posted at even intervals. Intermediate signs shall have a double headed arrow indicating the fire lane is continuous. The intermediate signs may be posted as necessary, but in no case shall the interval between fire lane signs be greater than 100 ft.
3. The fire lane sign shall be securely fastened to a suitable pole or support with a minimum vertical clearance above the sidewalk of 7 ft.
4. When poles are used to mount fire lane signs they shall be placed 2 ft. 6 in. behind the face of the curb. In accordance with the El Paso City Code, Title 12 – Vehicles and Traffic, no pole or obstruction may be placed within 5 ft. of a fire hydrant.
5. Fire lane signs shall be posted parallel to the lane or curb to which they apply.

6. When the distance between the curb and a building, light standard or other structure is 8 ft. or less, the fire lane signs may be posted on the face of the building, light standard or other structure. The bottom of the sign shall be located 7 ft. above the adjacent sidewalk. When required by the fire official, the owner shall also cause curbs or pavement to be painted red and be conspicuously and legibly marked with the warning "FIRE LANE--TOW AWAY ZONE" in white letters at least three inches tall, at intervals not exceeding 50 feet. It is unlawful for any person, without lawful authority, to remove any signs designating a fire lane. It shall be unlawful for any person to place, maintain or display any unauthorized fire lane, or use the color red for the marking of a no parking zone that purports to be, imitates or resembles official signage or marking of a fire lane.

9.52.200.8 Figure D103.6 Fire Lane Signs, amended.
International Fire Code, 2009 Edition, Figure D103.6 Fire Lane Signs, is hereby amended to read as follows:

Figure D103.6
Fire Lane Signs

Example 1: Fire Lane "Intermediate" Sign

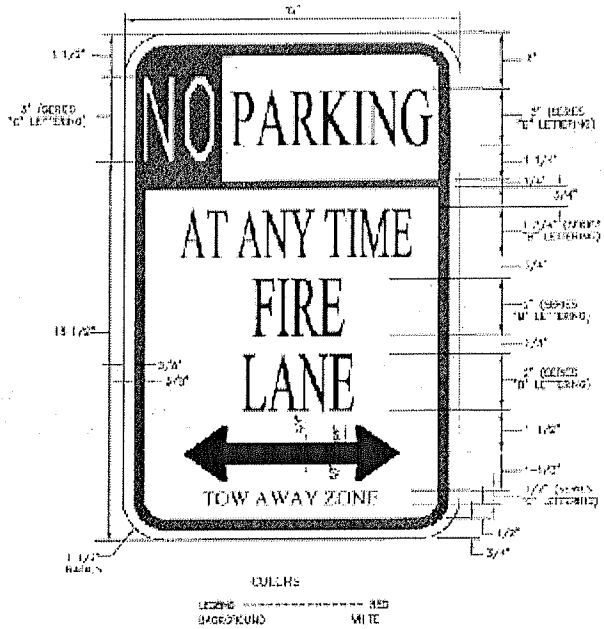

Example 2: Fire Lane "End" Sign

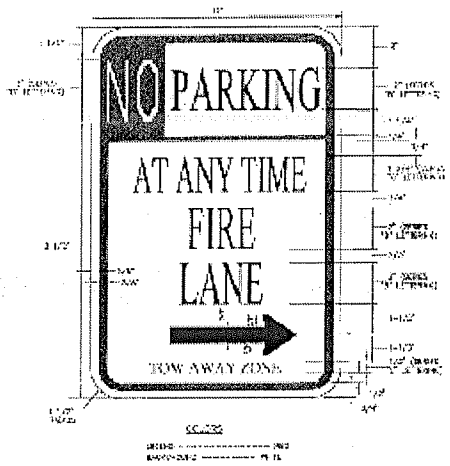

Example 3: Fire Lane "End" Sign

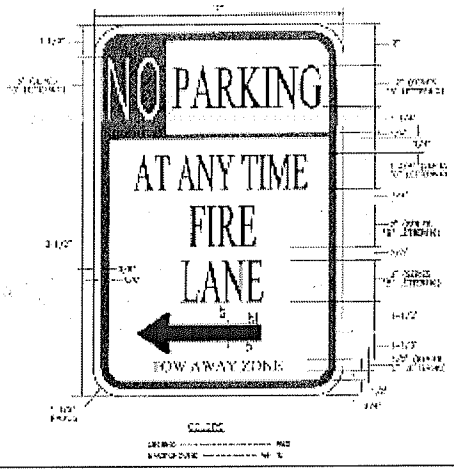

See Exhibit: TITLE 19 – Subdivision Ordinance – Design Standards for Construction
Section 7-24

9.52.200.9 Section D103.6.1 Roads 20 to 26 feet in width, amended.
International Fire Code, 2009 Edition, Section D013.6.1 Roads 20 to 26 feet in width, is hereby amended to read as follows:

D103.6.1 Roadways governed by Subdivision Ordinance.

Signage and marking of fire apparatus access roads within subdivisions shall be as prescribed in the Subdivision Ordinance of the City of El Paso, Texas.

9.52.200.10 Section D103.6.2 Roads more than 26 feet in width, amended.
International Fire Code, 2009 Edition, Section D013.6.2 Roads more than 26 feet in width, is hereby amended to read as follows:

D103.6.2 Roads less than 28 feet in width.
Fire apparatus access roads less than 28 feet wide (8.5 m) shall be posted on both sides as a fire lane.

9.52.200.11 Section D103.6.3 Roads more than 28 feet in width, added.
International Fire Code, 2009 Edition, Section D103.6.3 Roads more than 28 feet in width, is hereby added to read as follows:

D103.6.3 Roads more than 28 feet in width.
Fire apparatus access roads more than 28 feet wide (8.5 m) and less than 36 feet wide (11 m) shall be posted on one side of the road as a fire lane.

9.52.200.12 Section D103.6.4 Responsibility, added.
International Fire Code, 2009 Edition, Section D103.6.4 Responsibility, is hereby added to read as follows:

D103.6.4 Responsibility.
The owner or his representative of a building which is adjacent to the fire lane shall be responsible for maintaining the fire lane and ensuring that the fire lane free is clear of obstructions. It is unlawful to park any vehicle other than an authorized emergency vehicle in any fire lane. Unauthorized vehicles parked in designated fire lanes that block fire department or other emergency vehicle access may be towed to a designated storage facility by the authority of the *fire code official.*

9.52.200.13 Section D103.6.5 Records, added.
International Fire Code, 2009 Edition, Section D103.6.5 Records, is hereby added to read as follows:

D103.6.5. Records.
The official records of the designation and location of any such fire lanes shall be kept by the fire official. The fire official may require the property owner to submit site plans for determining and recording fire lanes on the property.

9.52.200.14 Section D103.7 Enforcement, added.
International Fire Code, 2009 Edition, Section D103.7 Enforcement, is hereby added to read as follows:

D103.7 Enforcement

The *fire code official* is empowered to enforce all fire lane violations when a designated fire lane is properly identified by signs, painted curbs, painted pavement, and or by combination thereof.

9.52.200.15 Section D107.1 One- or two-family dwelling residential developments, amended.
International Fire Code, 2009 Edition, Section D107.1 One- or two-family dwelling residential developments, is hereby amended to read as follows:

D107.1 One- or two-family dwelling residential developments.
Developments of one- or two-family dwellings where the number of dwelling units exceeds 130 shall be provided with separate and approved fire apparatus access roads, and shall meet the requirements of Section D104.3.

Exception:
1. The number of dwelling units on a single fire apparatus access road shall not be increased unless fire apparatus access roads will connect with future developments, as determined by the code official.
(Ord. 15964 § 1 (part), 2004)

9.52.210 Appendix E, Hazard Categories, adopted.
International Fire Code, 2009 Edition, Appendix E, Hazard Categories, is hereby adopted in its entirety.

9.52.220 Appendix F, Hazard Ranking, adopted.
International Fire Code, 2009 Edition, Appendix F, Hazard Ranking, is hereby adopted in its entirety.

9.52.230 Appendix G, Cryogenic Fluids-Weight and Volume Equivalents, adopted.
International Fire Code, 2009 Edition, Appendix G, Cryogenic Fluids-Weight and Volume Equivalents, is hereby adopted in its entirety.

9.52.240 Appendix I, Fire Protection Systems-Noncompliant Conditions, adopted.
International Fire Code, 2009 Edition, Appendix I, Fire Protection Systems-Noncompliant Conditions, is hereby adopted in its entirety.

C. All references to the NEC, National Electrical Code, shall be construed to mean the Electrical Code of the City of El Paso.

D. The effective date of this ordinance shall be January 1, 2011. This ordinance shall be applicable to all permit applications received on or after that date.

E. Except as herein provided, Title 9 (Health and Safety) shall remain in full force and effect.

PASSED AND APPROVED this _____ day of _____, 2010.

THE CITY OF EL PASO

_____
John F. Cook
Mayor

ATTEST:

_____
Richarda Duffy Momsen
City Clerk

APPROVED AS TO FORM:

_____
Cynthia Osborn
Assistant City Attorney

APPROVED AS TO CONTENT:

_____
Otto Drozd
Fire Chief

Chapter 9.52 Fire Prevention Code

Sections:

9.52.010 - ~~Adopted.~~
9.52.020 - ~~Appendices.~~
9.52.030 - Chapter 1, Administration—Amended.
9.52.040 - Chapter 2, Definitions—Amended.
9.52.050 - Chapter 3, General Precautions Against Fire—Amended.
9.52.060 - Chapter 4, Emergency Planning and Preparedness—Amended.
9.52.070 - Chapter 5, Fire Service Features—Amended.
9.52.080 - Chapter 9, Fire Protection Systems—Amended.
~~9.52.090~~ - Chapter 22, Motor Fuel-Dispensing Facilities and Repair Garages—Amended.
~~9.52.100~~ - Chapter 23, High-Piled Combustible Storage—Amended.
~~9.52.110~~ - Chapter 27, Hazardous Materials—General Precautions—Amended.
~~9.52.120~~ - Chapter 33, Explosives and Fireworks—Amended.
~~9.52.130~~ - Chapter 34, Flammable and Combustible Liquids—Amended.
~~9.52.140~~ - Chapter 38, Liquefied Petroleum Gases—Amended.
~~9.52.150~~ - ~~Chapter 45, Referenced Standards—Amended.~~
~~9.52.160~~ - Appendix A, Fee Schedule—Amended.
~~9.52.171~~ - Appendix D, Fire Apparatus Access Roads—Amended.

9.52.010 ~~- Adopted.~~

~~A.~~
The book entitled "International Fire Code," ~~(a copy of which shall be authenticated by the signatures of the mayor and city clerk, and made available for examination by interested persons in the city clerk's office), is adopted as a part of this code as fully as if copied at length in this title, except for the changes codified in this chapter. Any references made in this title to IFC shall mean the 2003 Adoption of the "International Fire Code" is intended to be cumulative of other provisions and chapters of the El Paso City Code pertaining to fire prevention, unless otherwise expressly stated herein.~~
~~B.~~
~~Whenever reference is made in the International Fire Code, or any other referenced standard or code, to "the authority having jurisdiction" for enforcement of the provisions thereof, the term "code official" shall be substituted therefore, unless otherwise provided for in this chapter.~~
~~C.~~
~~To the extent that any provisions of the "2003 International Fire Code" are in conflict with Title 18 of the city code, the provisions of Title 18 shall apply.~~

(Ord. 16812 § 3 (part), 2007; Ord. 15964 § 1 (part), 2004)

9.52.020 - ~~Appendices.~~

~~Pursuant to Section 101.2.1, only appendix A and D of the International Fire Code, 2003 Edition, are adopted, except as provided herein:~~

~~A.~~
~~Appendix A, Board of Appeals is deleted in its entirety and replaced with the following:~~

~~**Appendix A, Fee Schedule**~~

~~B.~~
~~Appendix D, Fire Apparatus Access Roads as amended.~~

(Ord. 15964 § 1 (part), 2004)

9.52.030 - Chapter 1, Administration—Amended.

SECTION 101 GENERAL

~~A.~~
~~101.1 is amended to read as follows:~~

~~**101.1 Title.** These regulations shall be known as the Fire Code of the City of El Paso, hereinafter referred to as "this code."~~

~~B.~~
103 is amended to read as follows:

SECTION 103 FIRE PREVENTION DIVISION

103.1 General. The Fire Prevention Division is established within the fire department. The function of the division shall be implementation, administration and enforcement of the provisions of this code.

~~C.~~
104.6 is amended to read as follows:

104.6 Official records. The code official shall keep official records as required by Sections 104.6.1 through 104.6.4. Such official records shall be retained for not less than five years or for as long as the structure or activity to which such records relate remains in existence, unless otherwise provided by other regulations. The records of the department shall be open to inspection by the public in accordance with applicable laws.

~~D.~~
104.10 is amended to read as follows:

104.10 Fire investigations. The code official shall have the authority to investigate the cause, origin and circumstances of any fire, explosion or other hazardous condition. Information that could be related to trade secrets or processes shall not be made part of the public record except as directed by a court of law.

~~E.~~
104.12 is added to read as follows:

104.12 Plan review and approval. The code official shall examine or cause to be examined submitted plans and accompanying documents for evidence of compliance with the provisions of this code.

~~F.~~
105.1.1 is amended as follows:

105.1.1 Permits Required. Permits and licenses required by this code shall be obtained from the code official. Permit and license fees, as required by Appendix A of this code, shall be paid to the city prior to issuance of the permit or license. This fee is charged to pay part of the expense of enforcing this section. Any person commencing work or performing any action requiring a permit under this code without first obtaining the necessary permit shall be subject to a fee of 200% of the scheduled permit fee in addition to the scheduled permit fee and other penalties set forth in Section 109.3 of this code. Issued permits shall be kept on the premises designated therein at all times and shall be readily available for inspection by the code official.

~~G.~~
105.1.1.1 is added to read as follows:

105.1.1.1 Payment required. A permit, although issued, shall not be valid until fees have been paid.

Exception: The City of El Paso, the County of El Paso, the El Paso Housing Authority, the State of Texas and the United States Government are exempted from payment of the permit fees required in this chapter; provided, that only such facilities as owned, operated and maintained by such governmental agencies shall be exempted from payment of such permit fees.

~~H.~~

105.1.2 is amended as follows:

105.1.2 Operational Permits. An operational permit allows the applicant to conduct an operation or a business for which a permit is required by Section 105.6 for a prescribed period not to exceed one year, unless revoked.

~~I.~~

~~105.2.3 Time limit of application is deleted.~~

~~J.~~

105.3.1 is amended to read as follows:

105.3.1 Expiration. An operational permit shall remain in effect for such a period of time as specified in the permit, unless revoked. Permits are not transferable and any change in occupancy, operation, tenancy or ownership shall require that a new permit be issued.

~~K.~~

105.4 is amended as follows:

105.4 Construction documents. Construction documents shall be in accordance with provisions as set forth in the building code.

~~L.~~

105.6 is deleted and amended to read as follows:

105.6 Required operational permits. The code official is authorized to issue operational permits and/or licenses for the operations set forth in sections 105.6.1 through 105.6.35

105.6.1 Aerosol products. An operational permit is required to manufacture, store or handle an aggregate quantity of Level 2 or Level 3 aerosol products in excess of 500 pounds (227 kg) net weight.

105.6.2 Aviation facilities. An operational permit is required to use a Group H or Group S occupancy for aircraft servicing or repair and aircraft fuel-servicing vehicles. Additional permits required by other sections of this code include, but are not limited to, hazardous materials and flammable or combustible finishes.

105.6.~~3~~ Battery systems. A permit is required to install stationary lead acid battery systems having a liquid capacity of more than 50 gallons (189 L).

105.6.~~4~~ Blasting operations. An operational permit is required to conduct blasting operations. Requirements as set forth in Chapter 33 of this code, must be met in order to obtain a blasting permit.

105.6.~~4.1~~ Blaster's license. A blaster's license shall be required to conduct any blasting operations within the jurisdictional area. A blaster's license shall be obtained in accordance with Chapter 33 of this code.

105.6.~~5~~ Combustible dust-producing operations. An operational permit is required to operate a grain elevator, flour starch mill, feed mill or a plant pulverizing aluminum, coal, cocoa, magnesium, spices or sugar, or other operations producing combustible dusts as defined in Chapter 2. 105.6.6 Combustible fibers. An operational permit is required for the storage and handling of combustible fibers in quantities greater than 100 cubic feet (2.8 m^3).

Exception: A permit is not required for agricultural storage.

105.6.~~7~~ Compressed gases. An operational permit is required for the storage, use or handling at normal temperature and pressure (NTP) of compressed gases in excess of the amounts listed in Table ~~105,6.7.~~

Exception: Vehicles equipped for and using compressed gas as a fuel for propelling the vehicle.

Table ~~105.6.7~~

Type of Gas	Amount (cubic feet at NTP)
Corrosive	Any amount
Flammable (except cryogenic fluids and liquefied petroleum gases)	~~400~~
Highly toxic	Any amount
Inert and simple asphyxiant	6,000
Oxidizing (including oxygen)	504
Toxic	Any amount

Permit Amounts for Compressed Gases

For SI: 1 cubic foot =0.02832 m^3.

105.6.~~8~~ Covered mall buildings. An operational permit is required for:

1. The placement of retail fixtures and displays, concession equipment, displays of highly combustible goods and similar items in the mall.

2. The display of liquid- or gas-fired equipment in the mall.

3. The use of open-flame or flame-producing equipment in the mall.

105.6.~~9~~ Cryogenic fluids. An operational permit is required to produce, store, transport on site, use, handle or dispense cryogenic fluids in excess of the amounts listed in Table 105.6.9.

Exception: Permits are not required for vehicles equipped for and using cryogenic fluids as a fuel for propelling the vehicle or for refrigerating the lading.

Table 105.6.~~9~~

Type of Cryogenic Fluid	Inside Building (gallons)	Outside Building (gallons)
Flammable	More than 1	60
Inert	60	500
Oxidizing (includes oxygen)	10	50
Physical or health hazard not indicated above	Any Amount	Any Amount

Permit Amounts for Cryogenic Fluids

For SI: 1 gallon = 3.785 L.

105.6.~~10~~ Explosives. An operational permit is required for the manufacture, storage, handling, sale or use of any quantity of explosive, explosive material, fireworks, or pyrotechnic special effects within the scope of Chapter 33.

105.6.~~11~~ Flammable and combustible liquids. An operational permit is required:

To use or operate a pipeline for the transportation 1. within facilities of flammable or combustible liquids. This requirement shall not apply to the off-site transportation in pipelines regulated by the Department of Transportation (Dot) (see Section 3401.2) nor does it apply to piping systems (see Section 3403.6).

To store, handle or use Class I liquids in excess of 2. 5 gallons (19 L) in a building or in excess of 10 gallons (37.9 L) outside of a building, except that a permit is not required for the following:

The storage or use of Class I liquids in the fuel 2.1. tank of a motor vehicle, aircraft, motorboat, mobile power plant or mobile heating plant, unless such storage, in the opinion of the code official, would cause an unsafe condition.

The storage or use of paints, oils, varnishes or 2.2. similar flammable mixtures when such liquids are stored for maintenance, painting or similar purposes for a period of not more than 30 days.

To store, handle or use Class II or Class IIIA 3. liquids in excess of 25 gallons (95 L) in a building or in excess of 60 gallons (227 L) outside a building, except for fuel oil used in connection with oil-burning equipment.

To remove Class I or Class II liquids from an ~~4~~. underground storage tank used for fueling motor vehicles by any means other than the approved, stationary on-site pumps normally used for dispensing purposes.

To operate tank vehicles, equipment, tanks, plants, ~~5~~. terminals, wells, fuel-dispensing stations, refineries, distilleries and similar facilities where flammable and combustible liquids are produced, processed, transported, stored, dispensed or used.

To install, alter, remove, abandon, place temporarily ~~6~~. out of service (for more than 90 days) or otherwise dispose of an underground, protected above-ground or above-ground flammable or combustible liquid tank.

To manufacture, process, blend or refine flammable or ~~7~~. combustible liquids.

105.6.~~12~~ Floor finishing. An operational permit is required for floor finishing or surfacing operations exceeding 350 square feet (33 m^2) using Class I or Class II liquids.

105.6.~~13~~ Fruit and crop ripening. An operational permit is required to operate a fruit or crop-ripening facility or conduct a fruit ripening process using ethylene gas.

105.6.~~14~~ Fumigation and thermal insecticidal fogging. An operational permit is required to operate a business of fumigation or thermal insecticidal fogging and to maintain a room, vault or chamber in which a toxic or flammable fumigant is used.

105.6.~~15~~ Hazardous materials. An operational permit is required to store, transport on site, dispense, use or handle hazardous materials in excess of the amounts listed in Table 105.6.~~15~~.

105.6.~~15.1~~ Exempt materials. The following materials are specifically exempted from any of the permitting requirements in 105.6.~~15~~:

Inert gases, which do not support combustion, to a. include argon, helium, krypton, neon, xenon, compressed air, carbon dioxide, and nitrogen. These gasses are subject to regulation under Section 105.6.~~7~~ when stored as cryogenic fluids.

Any hazardous material that is handled, used, stored, b. or disposed of and is kept for noncommercial purposes at a private residence in Permissible Quantities.

~~**Table 105.6.15**~~

~~**Permit Amounts for Hazardous Materials**~~

~~Type of Material~~	~~Amount~~
~~Corrosive materials~~	
~~Gases~~	~~See Section 105.6.7~~
~~Liquids~~	~~55 gallons~~
~~Solids~~	~~1,000 pounds~~
~~Explosive materials~~	~~See Section 105.6.10~~
~~Flammable materials~~	
~~Gases~~	~~See Section 105.6.7~~
~~Liquids~~	~~See Section 105.6.11~~
~~Solids~~	~~100 pounds~~
~~Highly toxic materials~~	
~~Gases~~	~~See Section 105.6.7~~
~~Liquids~~	~~Any Amount~~
~~Solids~~	~~Any Amount~~
~~Oxidizing materials~~	
~~Gases~~	~~See Section 105.6.7~~
~~Liquids~~	
~~Class 4~~	~~Any Amount~~
~~Class 3~~	~~1 gallon~~
~~Class 2~~	~~10 gallons~~
~~Class 1~~	~~55 gallons~~
~~Solids~~	
~~Class 4~~	~~Any Amount~~
~~Class 3~~	~~10 pounds~~
~~Class 2~~	~~100 pounds~~
~~Class 1~~	~~500 pounds~~
~~Organic Peroxides~~	
~~Liquids~~	
~~Class I~~	~~Any Amount~~
~~Class II~~	~~Any Amount~~
~~Class III~~	~~1 gallon~~
~~Class IV~~	~~2 gallons~~
~~Class V~~	~~No Permit Required~~
~~Solids~~	
~~Class I~~	~~Any Amount~~
~~Class II~~	~~Any Amount~~

~~Class III~~	~~10 pounds~~
~~Class IV~~	~~20 pounds~~
~~Class V~~	~~No Permit Required~~
~~Pyrophoric materials~~	
~~Gases~~	~~See Section 105.6.7~~
~~Liquids~~	~~Any Amount~~
~~Solids~~	~~Any Amount~~
~~Toxic materials~~	
~~Gases~~	~~See Section 105.6.7~~
~~Liquids~~	~~10 gallons~~
~~Solids~~	~~100 pounds~~
~~Unstable (reactive) materials~~	
~~Liquids~~	
~~Class 4~~	~~Any Amount~~
~~Class 3~~	~~Any Amount~~
~~Class 2~~	~~5 gallons~~
~~Class 1~~	~~10 gallons~~
~~Solids~~	
~~Class 4~~	~~Any Amount~~
~~Class 3~~	~~Any Amount~~
~~Class 2~~	~~50 pounds~~
~~Class 1~~	~~100 pounds~~
~~Water reactive materials~~	
~~Liquids~~	
~~Class 3~~	~~Any Amount~~
~~Class 2~~	~~5 gallons~~
~~Class 1~~	~~55 gallons~~
~~Solids~~	
~~Class 3~~	~~Any Amount~~
~~Class 2~~	~~50 pounds~~
~~Class 1~~	~~500 pounds~~

For SI: 1 gallon = 3.785 L, 1 pound = 0.454 kg

Any material contained in a transportation vehicle c. when said vehicle is not being used for permanent hazardous materials storage.

Any material, which is held solely as a d. pharmaceutical product.

Any hazardous waste material in a hazardous waste e. management facility that is permitted by the State pursuant to 42 U.S.C. Section 6925; provided, however, such materials shall be listed in the permit application if one is otherwise required.

Radioactive material(s) regulated at the Federal or f. State level; provided, however, that such material(s) be listed in the permit application if one is otherwise required.

Any material to the extent it is used in Permissible g. Quantities in routine agricultural operations by the end user.

Commercial products kept in Permissible Quantities h. and used at a facility solely for janitorial purposes.

Any material in interstate transmission facilities or i. interstate pipeline facilities regulated by 49 U.S.C. Sec. 60101 et. seq. (1997) and any amendments thereto, and any materials in pipeline facilities regulated by Chapter 117 of the Natural Resources Code, Vernon's Ann. Civ. Stat., and any amendments thereto, or subject to Texas Railroad Commission Pipeline Safety Laws and Regulations, and any amendments thereto.

105.6.~~16~~ HPM Facilities. An operational permit is required to store, handle or use hazardous production materials.

105.6.~~17~~ High-piled storage. An operational permit is required to use a building or portion thereof as a high-piled storage area exceeding ~~2000 square feet (186 m^2).~~

105.6.~~18~~ Industrial ovens. An operational permit is required for operation of industrial ovens regulated by Chapter 21. 105.6.~~19~~ Lumber yards and woodworking plants. An operational permit is required for the storage or processing of lumber exceeding 100,000 board feet (8,333 ft^3) (236m^3).

105.6.~~20~~ Liquid- or gas-fueled vehicles or equipment in assembly buildings. An operational permit is required to display, operate or demonstrate liquid- or gas-fueled vehicles or equipment in assembly buildings.

105.6.~~21~~ LP-gas. An operational permit is required for storage and use of LP-gas in containers with an aggregate total of 120 gallon water capacity or more.

105.6.~~22~~ Magnesium. An operational permit is required to melt, cast, heat treat or grind more than 10 pounds (4.54 kg) of magnesium per working day.

105.6.~~23~~ Organic coatings. An operational permit is required for any organic-coating manufacturing operation producing more than 1 gallon (4 L) of an organic coating in one day.

105.6.~~24~~ Places of assembly. An operational permit is required to operate a place of assembly ~~with an occupant capacity of 50 persons or more~~.

105.6.~~25~~ Private fire hydrants. An operational permit is required per each address to remove from service, use, operate or maintain a private hydrant.

Exception: A permit is not required for private industry with trained maintenance personnel, private fire brigade or fire departments to maintain, test and use private hydrants.

105.6.~~26~~ Pyroxylin plastics. An operational permit is required for storage or handling of more than 25 pounds (11 kg) of cellulose nitrate (pyroxylin) plastics and for the assembly or manufacture of articles involving pyroxylin plastics.

105.6.~~27~~ Refrigeration equipment. An operational permit is required to operate a mechanical refrigeration unit or system regulated by Chapter 6, containing in excess of 20 lb (9.1 kg) of refrigerant, other than air or water.

Exception: Air conditioning units or systems.

105.6.~~28~~ Repair garages. An operational permit is required for the operation of repair garages performing major motor vehicle repair as defined in Chapter 22. 105.6.~~29~~ Rooftop heliports. An operational permit is required for the operation of a rooftop heliport.

105.6.~~30~~ Spraying or dipping. An operational permit is required to conduct a spraying or dipping operation utilizing flammable or combustible liquids or the application of combustible powders regulated by Chapter 15. 105.6.~~31~~ Storage of scrap tires and tire byproducts. An operational permit is required to establish, conduct or maintain storage of scrap tires and tire byproducts that exceeds 2,500 cubic feet (71 m^3) of total volume of scrap tires and for indoor storage of tires and tire byproducts.

105.6.~~32~~ Temporary membrane structures, tents and canopies. An operational permit is required to operate an air-supported temporary membrane structure or a tent having an area in excess of 200 square feet (19m^2), or a canopy in excess of 400 square feet (37 m^2).

Exceptions:

Tents used exclusively for recreational camping 1. purposes.

Fabric canopies and awnings open on all sides which 2. comply with all of the following:

Individual canopies shall have a maximum size of 2.1. 700 square feet (65 m^2).

The aggregate area of multiple canopies placed side 2.2. by side without a fire break clearance of 12 feet (3.7 m) shall not exceed 700 square feet (65 m^2) total.

A minimum clearance of 12 feet (3.7 m) to 2.3. structures and other tents shall be provided.

105.6.~~33~~ Tire-rebuilding plants. An operational permit is required for the operation and maintenance of a tire-rebuilding plant.

105.6.~~34~~ Waste handling. An operational permit is required for the operation of wrecking yards, junk yards and waste material-handling facilities.

105.6.~~35~~ Wood products. An operational permit is required to store chips or hogged material in excess of 200 cubic feet (6 m^3).

105.6.~~36~~ For Use Permit. The fire official may require an operational permit to be issued for any operation, process, special event, public display, or exhibit not specifically covered by this code when the fire official deems such operation, process, special event, public display, or exhibit to be hazardous.

105.6.~~37~~ Open Burning. An operational permit is required for the kindling or maintaining of an open fire or a fire on any public street, alley, road, or other public or private ground. Instructions and stipulations of the permit shall be adhered to.

~~M.~~

105.7 is amended to read as follows:

105.7 Construction Permits. Where required, application for construction permit shall be made to the building official in accordance with Section 105 of the Building Code of the City of El Paso.

~~N.~~
108.1 is amended to read as follows:

108.1 Board of appeals. Appeals of orders, decisions or determinations by the code official relative to the application and interpretation of this code may be appealed to the Building Board of Appeals in accordance with Chapter 2.30 of the City Code.

~~O.~~
109.3 is amended to read as follows:

109.3 Violation penalties. Persons who shall violate a provision of this code or shall fail to comply with any of the requirements thereof or who shall erect, install, alter, repair or do work in violation of the approved construction documents or directive of the code official, or of a permit or certificate used under provisions of this code, shall be guilty of a misdemeanor, punishable by a fine of not more than two thousand dollars. Each day that a violation continues after due notice has been served shall be deemed a separate offense.

~~P.~~
109.4 is added to read as follows:

109.4 Class 'C' citations. The fire official shall have the authority to issue ~~class C~~ citations ~~and parking citations~~ for violations of provisions of this code.

~~Q.~~
111.4 is amended to read as follows:

111.4 Failure to comply. Any person who shall continue any work after having been served with a stop work order, except such work as that person is directed to perform to remove a violation or unsafe condition, shall be liable to a fine of not more than two thousand dollars.

(Ord. 16812 § 3 (part), 2007; Ord. 15964 § 1 (part), 2004)

9.52.040 - Chapter 2, Definitions—Amended.

Section 202 is amended by adding or changing the following definitions in their appropriate places:

~~A.~~
ALTER or **ALTERATION**—Any change or modification in construction or occupancy.
~~B.~~
BUILDING OFFICIAL—Where the term "Building Official" is used within the fire prevention code and this chapter, it shall have the same meaning as set forth in Section 18.02.101.4 of this code.
~~C.~~
CODE OFFICIAL—The fire chief or a duly authorized representative.
~~D~~.
ENVIRONMENT—means any surface water, groundwater, drinking water supply, land surface or subsurface strata, or ambient air within or under the control of the United States.
~~E.~~
FIRE CHIEF—the officer or other person charged with the administration of the Fire Department serving the jurisdiction, also known as the Code Official, or his authorized representative.
~~F.~~
FIRE DISTRICT—heavily populated or congested commercial area as described in Chapter 18.08 of the City Code, also known as the 'limits established by law'.
~~G~~.
FIRE MARSHAL—the head of the fire prevention division of the fire department.
~~H~~.
FIRE OFFICIAL—Where the term "fire official" is used within this code it shall mean the code official.
~~I.~~
JURISDICTIONAL AREA—within the city limits of the city or within five thousand feet thereof.
~~J.~~

PERSON—means any individual, firm, trust, partnership, corporation, joint venture, association, or other legal entity; any group of the foregoing organized for a business purpose; or any governmental entity.

(Ord. 16980 § 7, 2008; Ord. 16812 § 3 (part), 2007; Ord. 15964 § 1 (part), 2004)

9.52.050 - Chapter 3, General Precautions Against Fire—Amended.

~~A.~~
307.2.1 is amended to read as follows:

307.2.1 Authorization. Open burning shall only be permitted with prior approval from the state or local air and water quality management authority, provided that all conditions specified in the authorization are followed. Upon authorization by the state or local air and water quality management authority, the fire official shall be notified of the date, time and location of the proposed open burning. If the open burning is to be a bonfire, all additional requirements of the fire official must be met prior to approval.

Delete Section 310 Smoking, refer to city ordinance on smoking.

(Ord. 15964 § 1 (part), 2004)

9.52.060 - Chapter 4, Emergency Planning and Preparedness—Amended.

~~A.~~
408.2.2 is amended as follows:

408.2.2 Announcements. In Theaters, motion picture theaters, auditoriums and similar assembly occupancies in Group A used for noncontinuous programs, an audible announcement shall be made in both English and Spanish not more than 10 minutes prior to the start of each program to notify the occupants of the location of the exits to be used in the event of a fire or other emergency.

Exception: In motion theaters, the announcement is allowed to be projected in both English and Spanish upon the screen in a manner approved by the fire code official.

~~B.~~
408.12 is added to read as follows:

408.12 Places of Assembly

408.12.1 Overcrowding. The number of persons in any building or portion thereof shall not exceed the amount permitted in accordance with the Building Code. The owner, supervisor or manager responsible for admitting persons shall be responsible for keeping an accurate occupant count at all times during business hours. In places of assembly with a capacity of ~~300~~ or more persons, the occupant count shall be kept in written form and made readily available to Fire official or his authorized representative upon request.

408.12.2 Authority of fire official in overcrowded conditions. No person shall permit overcrowding or admittance of any person beyond the approved capacity of any place of public assembly. The fire official, upon finding any overcrowded conditions or obstructions in aisles, passageways or other means of egress, or upon finding any conditions which constitutes a serious menace to life, shall cause the performance, presentation, spectacle or entertainment to be stopped until such condition or obstruction is corrected.

408.12.3 Offense for allowing overcrowding. Any owner, supervisor or manager who shall admit persons in excess of the occupant capacity set by the Building Official shall be guilty of a Class C misdemeanor offense punishable by a fine as provided in the City Code. Each person admitted or ticket sold in excess of such number shall constitute a separate offense.

408.12.4 Failure to comply. For failure to comply herewith, the Fire official may, in the name of the City, apply to a court of competent jurisdiction for an injunction to compel compliance. Failure to comply with this subsection shall make the person so failing, and any person by whom he was employed at the time he failed to comply, subject to the enforcement provisions of Section 109.4 and he or she shall in addition show cause, if any exists, why he or she should not be eligible for a permit for two (2) years after the date of violation. These penalties are in addition to any criminal penalties provided for by this chapter.

(Ord. 15964 § 1 (part), 2004)

9.52.070 - Chapter 5, Fire Service Features—Amended.

~~A.~~

502.1 is amended by adding the following definition:

FIRE ATTACK ACCESS POINT. The most remote corner of the building or the most remote approved access/egress man door.

~~B.~~

503.2.5 is amended as follows:

503.2.5 Dead ends. ~~Dead-end fire apparatus access roads in excess feet in length shall be provided with an approved area for turning around fire apparatus.~~

~~C.~~

505.1 is amended to read as follows:

505.1 Address Numbers. New and existing buildings shall be numbered in accordance with ~~Sections 18.08 and 18.10~~ of the City Code.

~~D.~~

~~508.3.1~~ is added to read as follows:

~~**508.3.1**~~ **Flow Test Adjustments.** Water flow test data shall be adjusted to account for daily and seasonal fluctuations, large simultaneous industrial use, future demand on water supply, or any other condition that could affect the water supply. The fire protection system design shall be based on not more than 90% of the water flow test capacity.

~~E.~~

~~508.5.1~~ is amended to read as follows:

~~**508.5.1**~~ **Where required.** Where a portion of the facility or building hereafter constructed or moved into or within the jurisdiction is more than 400 feet (122m) from a hydrant on a fire apparatus access road, measured as the fire apparatus drives by an approved route around the exterior of the facility or building an approved fire attack access point, on-site fire hydrants and mains shall be provided where required by the fire code official.

Exception 3 for § ~~508.5.1~~ is added as follows:

If there are two (2) fire hydrants that are 3. within 600 feet (183m) of the facility or building meeting the criteria as described in ~~508.5.1~~ the 400-foot limit requirement shall not apply.

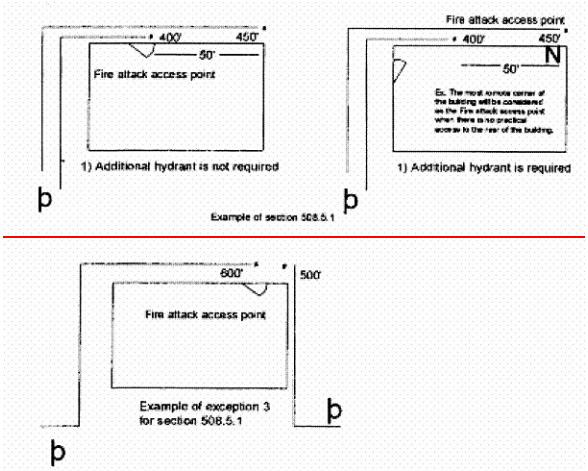

(Ord. 16812 § 3 (part), 2007; Ord. 15964 § 1 (part), 2004)

9.52.080 - Chapter 9, Fire Protection Systems—Amended.

~~A.~~

Section 903.~~2.7~~ is amended to read as follows:

903.~~2.7~~ Group R-1. An automatic sprinkler system shall be provided throughout buildings with a Group RI fire area.

Exceptions:

Where guestrooms are not more than three stories 1. above the lowest level of exit discharge and each guestroom has at least one door leading directly to an exterior exit access that leads directly to approved exits.

A residential sprinkler system installed in 2. accordance with Section 903.3.1.2 shall be allowed in buildings, or portions thereof, of Group R-1.

903.~~2.8~~ Group R-2. An automatic sprinkler system shall be provided throughout all buildings with a Group R-2 fire area where more than two stories in height, including basements, or where having more than 16 dwelling units.

Exception: A residential sprinkler system installed in accordance with Section 903.3.1.2 shall be allowed in buildings, or portions thereof, of Group R-2.

903.~~2.9~~ Group R-4. An automatic sprinkler system shall be provided throughout all buildings with a Group R-4 fire area with more than eight occupants.

Exception: An automatic sprinkler system installed in accordance with Section 903.3.1.2 or 903.3.1.3 shall be allowed in Group R-4 facilities.

~~B.~~

~~904.4.4~~ is added as follows:

903.4.4 Multi Tenant Buildings. In buildings requiring sprinkler systems with multiple tenants, where no fire alarm is required, ~~each tenant will have the minimum of one notification device that is activated by the monitoring alarm system, in a location approved by the code official.~~

~~C.~~

906.~~3.1~~ is added to read as follows:

906.~~3.1~~ Minimum extinguisher requirements. Each individual occupancy shall have, at a minimum, one 2A1OBC extinguisher for every 3000 square feet, or fraction thereof Greater protection may be required depending on the nature of the hazard.

~~D~~.
907.2.~~14~~ is amended to read as follows:

907.2.~~14~~ High piled combustible storage areas. ~~An automatic fire detection system shall be installed throughout high-piled combustible storage areas where required by Section 2305, amended.~~

~~E.~~
~~910.2.3 is amended to read as follows:~~

~~**910.2.3 High-piled combustible storage.** Buildings and portions thereof containing High-piled combustible stock or rack storage in any occupancy group in accordance with Section 2307 amended.~~

~~F.~~
~~910.4.3 is amended to read as follows:~~

~~**910.4.3 Operation.** Individual manual controls of each fan unit shall be provided.~~

(Ord. 15964 § 1 (part), 2004)

9.52.~~090~~ - Chapter 22, Motor Fuel-Dispensing Facilities and Repair Garages—Amended.

~~A.~~
~~Delete definition for "Repair Garage" in Section 2202.1.~~
~~B.~~
~~Add the following definitions to Section 2201.1:~~

~~**MOTOR VEHICLE REPAIR, MINOR—**An area or building which may provide the services of Automotive Tune-up or Lubrication Service and/or an Automotive Service Station and also including the following activities:~~

~~Wheel alignments and mounting, 1.~~

~~Tire sales, service, mounting and balancing, 2.~~

~~Maintenance on brake system, 3.~~

~~Emergency road service. 4.~~

~~**MOTOR VEHICLE REPAIR, MAJOR—**An area or building Which may provide the services of Automotive Repair, Minor, and Automotive Tune-up or Lubrication Service, and, in addition, allows the repair, rebuilding or reconditioning of engines, motor vehicles or trailers, body frame or fender repair or painting of vehicles.~~

(Ord. 15964 § 1 (part), 2004)

9.52.~~10~~0 - Chapter 23, High-Piled Combustible Storage—~~Amended.~~

~~Chapter 23, High-Piled Combustible Storage, of the International Fire Code, 2003 edition, is deleted in its entirety and replaced with the following:~~

~~**2301 Scope.** This chapter shall apply to the storage of high-piled combustible material and high-rack storage systems in new buildings or buildings converted to this use in accordance with Section 3405.1 of the building code. Factors such as method and height of stock piling, combustibility of materials, fuel load and rate of heat release, areas and size of piles, aisles, automatic fire extinguishing systems, smoke removal systems, fire protection and fire separations are considered in setting forth the provisions of this chapter. In the absence of specific provisions in this chapter, NFPA 231 and 231 C shall apply.~~

~~**2302 DEFINITIONS**~~

~~**COMMODITY**—the combination of products, packing materials and containers.~~

~~**DESIGNATED HIGH PILED COMBUSTIBLE STORAGE AREA (HIGH-PILED COMBUSTIBLE STOCK)**—that area within a building which is designed, intended, proposed or actually used for such storage.~~

~~**HIGH PILED COMBUSTIBLE STORAGE**—combustible materials in closely packed piles more than 15 ft. (4.6m) high or combustible materials on pallets or on racks more than 12 ft. (3.7m) high. For certain special hazard commodities such as rubber tires, plastics, some flammable liquids, and idle pallets, the critical height may be as low as 6 ft. (l.8 m).~~

~~**HIGH RACK STORAGE SYSTEMS**—those systems that have storage over 40 ft. (12.2 m) high; the placement of racks is such that aisles are not provided as required by 2308, stock handling is automated, and the rack storage area has no occupant load.~~

~~**2303 PERMITS**~~

~~A High-Piled Combustible Stock Permit shall be applied for and obtained in accordance with Chapter 1 of the IFC prior to the use of any building or portion of a building exceeding 2000 sq. ft. (232.5 m) for the storage of high-piled combustible stock.~~

~~**2304 CLASSIFICATION OF CONTENTS**~~

~~**2304.1 Classifications.** Commodity classifications shall be defined in accordance with the following:~~

~~1. **Class I commodity**—a commodity which is essentially noncombustible, products on wooden or non-expanded polyethylene solid deck pallets, in ordinary corrugated cartons with or without single-thickness dividers, or in ordinary paper wrappings with or without pallets. Examples of Class I commodities include but are not limited to the following: electrical appliances, dairy products in non-wax coated containers, dry insecticides, foods in noncombustible containers, frozen foods, fresh fruits and vegetables in non-plastic trays or containers, glass, glycol in cans, gypsum board, bagged inert materials, noncombustible insulation, metal products.~~

~~2. **Class II commodity**—Class I products in slatted wooden crates, solid wooden boxes, multiple thickness paperboard cartons or equivalent combustible packaging material with or without pallets. Examples of Class 11 commodities include but are not limited to the following: beer or wine up to 20% alcohol in combustible containers, incandescent or fluorescent light bulbs in cartons, thinly coated wire on reels or in cartons.~~

~~3. **Class III commodity**—a commodity of wood, paper, natural fiber cloth, Level I Aerosol Products, or Group C plastics or products thereof, with or without pallets. Products may contain a limited amount of Group A or B plastics, such as wood dressers with plastic drawer glides, handles and trim. Examples of Class III commodities include~~

~~but are not limited to the following: combustible fiberboard, baled cork, bagged feed, bagged fertilizers, furniture (wood, natural fiber, upholstered, non-plastic or wood or metal with plastic padded and covered armrests), lubricating or hydraulic fluid in metal cans, lumber (stored flat), mattresses (excluding foamed rubber and foamed plastics), nonflammable liquids in plastic containers, oil base paints in cans, paper and pulp (horizontal storage), baled waste paper, pillows (excluding foamed rubber and foamed plastics), plastic coated paper food containers, plywood, baled rags, rugs (no foamed backing), bagged sugar, baled wood, wood doors, frames and cabinets, yarns (natural fiber and viscose).~~

~~4. **Class IV commodity—** Class I, II or III products containing an appreciable amount of Group A plastics in ordinary corrugated cartons and Class 1, II, and III products in corrugated cartons with Group A plastic packaging, with or without pallets. Group B plastic and free-flowing Group A plastics are also included in this class. Examples of Class IV commodities include but are not limited to the following: alcohol (over 20% but under 80%) in cans or bottles in cartons, synthetic or non-viscose clothing, plastic upholstered furniture, wood or metal furniture with plastic covering and/or padding, linoleum products, lubricating or hydraulic fluid in containers, lumber (stored vertical), pharmaceuticals, alcoholic elixirs, tonics, etc., rubber goods, foamed back rugs, asphalt shingles, synthetic or non-viscose thread or yarn.~~

~~5. **Class V commodity -** high hazard products presenting special fife hazards beyond those of Class I, II, III or IV. Examples of Class V commodities include, but are not limited to, the following: Level 2 and Level 3 Aerosol Products, alcohol (80% or higher) in bottles in cartons, foamed rubber or foamed plastic mattresses, pallets and flats (idle combustible), asphalt paper (rolled horizontal storage), asphalt paper (rolled vertical storage), rolled paper and pulp (unbanded vertical storage), foamed rubber pillows and foamed plastics, plastic products in cartons (ABS, polystyrene, polyethylene), foamed urethane and polystyrene plastic, pyroxylin, rubber tires.~~

~~Where a Class 1, II or III commodities stored on 6. plastic pallets or plastic shelves, the commodity classification shall be increased one classification. Where a Class IV commodity is stored on plastic pallets or plastic shelves, sprinkler density shall be increased by 25%.~~

~~**2304.2 Unmodified Plastics.** Plastic materials listed within each commodity classification are assumed not to be modified for improved combustibility characteristics. Use of flame retarding modifiers or the physical form of the material may change the classification.~~

~~**2305 FIRE PROTECTION**~~

~~**2305.1 General.** Fire protection for buildings used for high-piled combustible storage shall be in accordance with Table 2305 and the Building Code. Nationally recognized standards or guidelines applicable shall apply to the design, construction, operation, inspection, testing and maintenance of fire protection features required by Table 2305.~~

~~**Exceptions:**~~

~~Pile or rack storage of flammable and combustible 1. liquids in small containers and portable tanks protected in accordance with NFPA 30.~~

~~Aerosol products protected in accordance with Chapter 2. 28 of this code and NFPA 30B.~~

~~Rubber tires protected in accordance with NFPA 231D. 3.~~

~~Combustible fibers protected in accordance with 4. Chapter 29 of this code and NFPA 231E.~~

~~Roll paper protected in accordance with NFPA 231F. 5.~~

~~**2305.1.1 Covered Areas.** Fire protection for high-piled storage areas shall extend a minimum of 15 ft. (4.6 m) beyond the high-piled storage area. For the purposes of this chapter, fire protection shall be deemed to be any active or passive system which is intended for the extinguishment of fire or the protection of the building components and/or property from the effects of fire. Fire protection systems shall include, but not be limited to the following: sprinklers, smoke and heat vents, curtain boards, mechanical smoke removal, column protection, smoke and heat sensors, etc.~~

~~**2305.2 Separation of High-Piled Storage Areas.** Portions of buildings that do not meet the requirements of Chapter 23 for high-piled combustible storage shall be separated from high-piled combustible storage areas by one of the following methods:~~

~~A one-hour separation wall between areas not 1. protected with automatic sprinkler system or high-piled storage areas in excess of the maximum allowable areas set forth in Table 2305,~~

~~A 60-foot space not used for combustible storage, or 2.~~

~~A minimum of a one-hour occupancy separation wall 3. between other sprinklered areas that are not accessory to the high-piled storage area.~~

~~**Exception:** Separation is not required between accessory areas that are fully protected with a sprinkler system. Accessory areas shall include, but are not limited to, loading areas, check-out areas, rest rooms, employee lounges, offices and equipment areas used for assembling, disassembling, repairing, fabricating, finishing, manufacturing, packaging, or processing operations with temporary storage of combustible materials not exceeding three hundred cubic feet (300 ft.^{3}) in any four hundred square feet (400 ft.^{2}) area. Fire protection for high-piled storage areas shall extend a minimum of 15 ft. (4.6 m) beyond the high-piled storage area.~~

~~**2306 AUTOMATIC FIRE EXTIN-GUISHING SYSTEMS**~~

~~**2306.1 General.** The design and installation of automatic fire extinguishing systems shall conform to requirements in the building code and in NFPA 231 and 231C.~~

~~**2306.2 System Design.** The fire extinguishing system shall be designed by a registered engineer or approved designer and shall be approved in accordance with the provisions of the building code.~~

~~**2306.3 Sprinkler System Waterflow Alarm Enunciator.** A sprinkler water flow fire alarm enunciator shall be installed in the smoke fan control area adjacent to the fan control panel. The enunciator shall depict at a minimum the various sprinkler system zones and shall be capable of identifying the zone of origin of the waterflow alarm.~~

~~**2306.4 Undetermined Use.** Use of a building or facility shall be considered undetermined if the specific use, occupant, product, activity or storage array are not specified at the time the building permit is issued.~~

~~**2306.5 Undetermined Use System Design.**~~

~~Warehouse buildings of Group S or Group F Occupancy 1. classification of undetermined use whose maximum building height, from finished floor to roof deck, is 25 feet or less shall have the capacity to be protected by a sprinkler system designed and installed with a ceiling only density of not less than .60 gallons per square foot throughout a 3000 square foot design in accordance with NFPA 13, and NFPA 231 or NFPA 231C.~~

~~Warehouse buildings of Group S classification and 2. buildings of Group F classification of undetermined use whose maximum building height, from finished floor to roof deck,~~

~~exceeds 25 feet shall have the capacity to be protected by an ESFR sprinkler system designed and installed in accordance with NFPA 13, and NFPA 231 or NFPA 231C.~~

~~2306.6~~ **Waterflow Test Data Adjustment.** The waterflow test data shall be adjusted by the system designer to account for daily and seasonal fluctuations, large simultaneous industrial use, future demand on the water supply system, or any other condition that could affect the water supply. The fire protection system design shall be based on not more than 90% of the water flow test capacity.

~~Table 2305~~

~~Fire Protection Requirements~~

~~for High-Piled Combustible Storage~~

Commodity Class[1]	Designated Storage Area[2] (square feet) (× 0.0929 for m^2)	All Storage Areas Automatic Sprinkler System[3]	All Storage Areas Automatic Fire Detection System[4]	All Storage Areas Building Access[5]	All Storage Areas Smoke and Heat Venting or Mechanical Smoke Removal	All Storage Areas Small Hose System[8]	Solid Pile, Shelf and Palletized Storage Maximum Pile Dimension[9] (ft) (× 30488 for mm)	Solid Pile, Shelf and Palletized Storage Maximum Storage Height[10] (ft) (× 30488 for mm)
I-IV								
	2,000—12,000	Yes	NR	Note[6]	NR	NR	100	40
	2,000—12,000	NR	YES	Note[6]	Note[11]	NR	100	40
	12,000—18,000	Yes	NR	Yes	NR	Yes	100	40
	12,000—18,000	NR	YES	Yes	Note[11]	NR	100	40
	18,000—300,000	Yes	NR	Yes	Yes[7]	Yes	100	40
	Over 300,000	Yes	NR	Yes	Yes[7]	Yes	100	40
Class V (High Hazard)	2,000—4,000	Yes	NR	Note[6]	NR	NR	50	20
	4,000—12,000	Yes	NR	Note[6]	Yes[7]	NR	50	30
	12,000—48,000	Yes	NR	Yes	Yes[7]	Yes	50	30
	48,000—300,000	Yes	NR	Yes	Yes[7]	Yes	50	30
	Over 300,000	Yes	NR	Yes	Yes[7]	Yes	50	30

Notes:

NR = Not Required

Commodities shall be classified in accordance with 1. 2304.

The size of designated high-piled storage area when 2. using this table shall include the aggregate of all high-piled storage areas and all portions of the building not separated from the high-piled storage areas in accordance with 2305.2, except in manufacturing facilities, high piled combustible storage areas shall be treated as separate areas when such areas do not exceed 18,000 sf of high piled combustible storage, are separated from other high piled combustible storage areas by a minimum of one hundred and twenty feet (120 ft) within which temporary storage of combustible

~~materials does not exceed three hundred cubic feet (300 cf) in any four hundred square foot (400 sf) area, and the aggregate of all high piled combustible storage areas within the building does not exceed twenty percent (20%) of the gross floor area of the building.~~

~~Automatic sprinkler system shall conform with 2306.~~ ~~3.~~

~~Automatic Fire Detection shall conform with 2305.6,~~ ~~4. not required when automatic sprinkler system is installed to protect the high-piled storage area in accordance with 2306.~~

~~Building access shall conform with 2309.~~ ~~5.~~

~~Access roadways conforming with 503 are required, and~~ ~~6. aisles conforming with 2308 shall be provided.~~

~~Mechanical smoke removal system shall conform with~~ ~~7. 2307.3.~~

~~Small hose system shall conform with 2310.~~ ~~8.~~

~~Not applicable to single or double-row rack storage~~ ~~9. with adjacent aisles.~~

~~Storage heights in excess of the maximum pile height~~ ~~10. are permitted where additional fire protection is provided. Such additional protection shall include increased sprinkler density, redundant (secondary) water supplies, supplemental automatic fire extinguishing systems, reduction in maximum pile areas within designated storage areas, increased fire resistance of fire barriers within designated storage areas, or additional automatic fire detection.~~

~~Smoke and heat vents and curtain boards shall be~~ ~~11. provided and shall conform with 2307.2.~~

~~**2306.7 Change of Occupancy or Use.** When a change of use or occupancy results in a code requirement for a fire protection system with greater capability than the facility's existing system can provide, the existing system shall be upgraded or a new system provided to meet the requirements of the new use or occupancy.~~

~~**2306.8 Ceiling Sprinkler Design Density.** The design density of ceiling sprinklers shall be based on the maximum proposed storage height and in no case shall the assumed design storage height be less than the floor to roof deck height reduced by five (5) feet.~~

~~**2307 SMOKE VENTING AND REMOVAL**~~

~~**2307.1 General.** When requested by Table 2305, smoke and heat vents or mechanical smoke removal systems shall conform to the requirements of this section.~~

~~**2307.2 Smoke and Heat Vents and Curtain Boards.** The design and installation of smoke and heat vents and curtain boards shall be as specified in the Building Code, except as modified by the following:~~

~~In non-sprinklered buildings, smoke and heat vents~~ ~~1.~~ ~~shall operate automatically by actuation of a heat-responsive device rated at between 100 °F (56 °C) and 200 °F (111 °C) above ambient temperature. In fully-sprinklered buildings, smoke and heat vents shall be designed to operate automatically after the design activation time of the sprinkler system.~~

~~The minimum dimension of any smoke and heat vent~~ ~~2.~~ ~~opening shall be 4 ft (1.22 m).~~

~~Smoke and heat vents and curtain boards shall be~~ ~~3.~~ ~~installed in accordance with Table 2307.~~

~~2307.2.1 Curtain boards shall be provided in accordance~~ ~~with 2307.~~

~~**Exceptions:**~~

~~Curtain boards shall not be required in buildings 1. protected by ESFR sprinklers installed in accordance with NFPA 13 and NFPA 231 or NFPA 231C.~~

~~Curtain boards shall not be required in buildings 2. protected by a sprinkler system installed in accordance with NFPA 13 and NFPA 231 or NFPA 231C and a mechanical smoke removal system meeting the requirements of 2307.3.2.2.~~

~~**2307.3 Mechanical Smoke Removal**~~

~~**2307.3.1 When required.** A mechanical smoke removal system shall be provided for buildings used for high-piled storage areas when the designated storage area as defined in 2305.2 and Table 2305 exceeds 18,000 square feet when Class I-IV commodities or 4,000 square feet when Class V or high-hazard commodities are involved.~~

~~**Exceptions:**~~

~~Frozen food storage classified as Class I or Class II 1. commodity is not required to be provided with a smoke removal system when fully protected by an automatic sprinkler system.~~

~~Existing buildings with code-compliant draft curtain 2. boards and smoke vent systems are not required to comply with 2307.3.~~

~~**2307.3.2** Buildings fully protected by an ESFR sprinkler system shall be equipped with a mechanical smoke removal system capable of providing a minimum of two air changes per hour (30 minute air change).~~

~~**23073.3** Buildings fully protected by a sprinkler system designed and installed in accordance with NFPA 13 and NFPA 231 or NFPA 231C shall be equipped with a mechanical smoke removal system capable of providing a minimum of four air changes per hour (15 minute air change).~~

~~**23073.4** Supply air for exhaust fans shall be provided at or near the floor level and shall be sized to provide a minimum of 50% of required exhaust. Openings for supply air shall be uniformly distributed around the periphery of the area served.~~

~~**2307.3.5** Fans shall be in accordance with the following:~~

~~The maximum individual capacity of a fan shall be 1. 30,000 cfm (14.2 m^3/s).~~

~~Where curtain boards are used, exhaust fans shall be 2. uniformly spaced and the maximum distance between fans shall not be greater than 100 ft (30.5 m). Where curtain boards are not used, exhaust fans shall be uniformly spaced and the maximum distance between fans shall not be greater than 200 ft (60.9 m).~~

~~Thermal protection of wiring and smoke removal fan 3. unit shall be based upon a 1000°F (538°C) exposure for not less than 15 minutes.~~

~~2307.3.6 Controls shall be in accordance with the following:~~

~~On combination comfort air handling/smoke removal 1. systems or independent comfort air handling systems, fans shall be controlled to shut down in accordance with the automatic shutoff requirements of the mechanical code or by activation of automatic extinguishing or detection systems.~~

~~Electrical service to the smoke removal systems shall 2. be connected on the line side of the main electrical disconnect.~~

~~The smoke removal fire department system control 3. panel shall be located in an approved location, and shall be clearly identified. The control panel location shall be separated from the rest of the building by not less than a 1 hour fire resistance rated occupancy separation as defined in the building code. The location shall comply with one of the following:~~

~~The location shall be a panel room within the 3.1. building that is directly accessible from the exterior of the building. Automatic sprinkler protection shall be provided in the panel room; or~~

~~Table 2307~~

~~Hazard Classification~~	~~Designated Storage Height~~	~~Curtain Board Depth (ft.)~~	~~Max. Area Formed By Curtain Boards (sq. ft.)~~	~~Vent Area To Floor Area Ratio~~	~~Maximum Spacing of Vent Centers (ft.)~~	~~Maximum Dist. From Wall or Curtain Boards (ft.)~~
~~I through IV~~	~~20 ft. or less~~	~~6~~	~~10,000~~	~~1:100~~	~~100~~	~~60~~
~~I through IV~~	~~over 20 ft. to 40 ft.~~	~~6~~	~~8,000~~	~~1:75~~	~~100~~	~~55~~
	~~to 40 ft~~					
~~I through IV~~	~~20 ft or less~~	~~4~~	~~3,000~~	~~1:75~~	~~100~~	~~55~~
~~I through IV~~	~~over 20 ft. to 40 ft.~~	~~4~~	~~3,000~~	~~1:50~~	~~100~~	~~50~~
~~V~~	~~20 ft. or less~~	~~6~~	~~6,000~~	~~1:50~~	~~100~~	~~50~~
~~V~~	~~over 20 ft. to 30 ft.~~	~~6~~	~~6,000~~	~~1:40~~	~~90~~	~~45~~
~~V~~	~~30 ft. or more~~	~~4~~	~~2,000~~	~~1:30~~	~~75~~	~~40~~

~~Smoke and Heat Vents and Curtain Boards~~

~~1 ft. = 0.3048 m~~

~~1 sq. ft. = 0.0929 m^2~~

~~Note: For storage heights in excess of those indicated, an engineered design shall be submitted for approval.~~

~~The location shall be outside the building in an 3.2. approved weather protected housing that is accessible, of sufficient size to allow the Fire Official to be completely within the housing when operating the controls, and has a locking device approved by the Fire Official.~~

~~Controls shall be designed for selective control of 4. each smoke removal unit.~~

~~A firefighter's control panel shall be provided for 5. manual control of the mechanical smoke removal system. Such panel shall be designed to graphically depict the building arrangement, sprinkler zones and mechanical smoke removal zones. The status of each mechanical smoke removal zone shall be indicated by lamps and appropriate legends. Devices, switches, indicators and similar items shall have identifying legends with a size~~

~~and stroke equivalent to 12-point Helvetica Medium. The firefighter's control panel layout shall be submitted at full scale for approval prior to installation. All maps will be sufficiently waterproofed to prevent fire streams or sprinklers from washing the ink off of the map.~~

~~**2308 AISLES**~~

~~**2308.1 General.** Aisles not less than 44 inches (1,118 mm) wide shall be established to provide access to exits and fire department access doors and shall comply with the following:~~

~~Aisles shall extend from floor to ceiling unless 1. otherwise approved by the fire official.~~

~~For aisles separating storage piles, see NFPA 231 and 2. 231C.~~

~~Rack structural support may be permitted across 3. aisles above the 6 ft. 8 in. (2.03 m) level if it does not interfere with hose streams or accessibility.~~

~~**2308.2 Aisles in High-Rack Storage Systems.** For aisles in high-rack storage systems, see footnote 6 on Table 2305.~~

~~**2309 ACCESS TO BUILDING**~~

~~**2309.1 Access Roadways.** Roadways shall provide access to at least two sides of any buildings used for high-piled combustible storage, where the high piled combustible storage exceeds 12,000 ft^2 (1115 m^2), in accordance with the provisions of Section 503 of this code. The determination of such access shall be subject to the approval of the fire official. Roadway access may include truck aprons on loading docks and public rights-of-way.~~

~~Section 2309.1.2 added as follows:~~

~~**2309.1.2 Access Roadways in buildings with more than one tenant.** Buildings with more than one tenant that are subdivided by partition walls require each tenant space to have access roadways to at least two sides of every tenant space used for high-piled combustible storage in accordance with the provisions set forth in section 2309.1~~

~~**2309.2 Access Doors.** For fire fighting purposes, there shall be at least one access door for each 100 linear feet (30.5 m) or major fraction thereof of the exterior walls which face the access roadways required by Section 503 of this code. The doors shall be spaced not less than 50 linear feet (18.3 m) nor more than 120 linear feet (36.6 m) apart. The doors shall be a minimum of 3 ft (9144 mm) wide and 6 ft 8 in. (2.03 m) high and shall be accessible without the use of a ladder. These doors will be clearly marked with the words, "Fire Access Door" or with a 4 inch fire department logo (see below). Rolling doors are not acceptable for such purposes, unless approved by the fire official.~~

~~**Exception:** In buildings protected with an automatic fire extinguishing system throughout and having less than 12,000 ft^2 (1,115 m^2) of high piled stock of Class I through Class IV commodity, access doors are not required.~~

~~**2310 SMALL HOSE CONNECTIONS**~~

~~**2310.1** Small hose connections complying with NFPA 231 and 231C shall be provided as shown in Table 2305.~~

~~**2310.2** Hose and nozzles may be omitted when approved by the fire official.~~

~~**2310.3** Where provided, nozzles shall be selected for proper operation based on the hydraulic characteristics of the automatic sprinkler system.~~

~~**2310.4** Small hose connections shall be protected from damage by physical impact.~~

~~**2311 HIGH RACK STORAGE SYSTEMS**~~

~~**2311.1** Prior to occupancy, buildings housing High-Rack storage systems shall be approved by the fire official.~~

~~**2311.2** Installation of High-Rack systems will require special considerations such as separation from other buildings, built-in fire protection and fire department access and shall be as required by the fire official.~~

~~**2312 PLANS AND SPECIFICATIONS**~~

~~**2312A Plans and Specifications Submittal.** At the time of building permit application for new buildings and structures designed to accommodate high-piled combustible storage or for a change of occupancy/use, and at the time of application for a High Piled Combustible Stock Permit, plans and specifications shall be submitted for review and approval. In addition to the information required by the City Code, the High Piled Combustible Stock permit submittal shall include the information specified in this Section. Following approval of the plans, a copy of the approved plans shall be maintained on the premises in an approved location.~~

~~The plans shall include the following:~~

~~Floor plan of the building showing locations and 1. dimensions of high-piled storage areas.~~

~~Useable storage height for each storage area. 2.~~

~~Number of tiers in each rack, if applicable. 3.~~

~~Commodity clearance between top of storage and the 4. sprinkler deflector for each storage arrangement.~~

~~Aisle dimensions between each storage array. 5.~~

~~Maximum pile volume for each storage array. 6.~~

~~Location and classification of commodities in 7. accordance with Section 2304.~~

~~Location of commodities which are banded or 8. encapsulated.~~

~~Location of required fire department access doors. 9.~~

~~Type of fire suppression and fire detection systems. 10.~~

~~Location of valves controlling the water supply of 11. ceiling and in-rack sprinklers.~~

~~Type, location and specifications of smoke removal 12. and curtain board systems.~~

~~Dimension and location of transverse and 13. longitudinal flue spaces.~~

~~Additional information regarding required) design 14. features, commodities, storage arrangement and fire protection features within the high-piled storage area shall be~~

~~provided at the time of permit, when required by the Fire Department or Building Services Department.~~

2313 Existing Buildings

2313.1 Purpose and intent. The City Council hereby finds, as a matter directly affecting public—safety, protection of property, and the life safety of personnel involved in fire suppression activities, that it is necessary that the fire protection for existing buildings used for high-piled combustible storage be in accordance with Chapter 23 of the International Fire Code (IFC) as adapted and amended, and as further amended herein.

~~**2313.2 Definitions.** For purposes of this section, the following terms have the following definitions:~~

~~"High-Piled Combustible Storage Building" means any building or structure or portion thereof, of any type of construction or occupancy, used to store high-piled combustible materials as defined in the amendments to Chapter 2 of this code.~~

2313.3 Applicability. The provisions of Section 2313 shall apply to all existing buildings used for high-piled combustible storage on or after December 8, 1998, regardless of the date of construction or prior issuance of a certificate of occupancy for that building.

2313.4 Fire Protection. The protection for existing buildings used for high-piled combustible storage shall be in accordance with Table 230~~5~~ and the Building Code as amended or further amended herein.

~~**2313.5** After effective date, it shall be unlawful for any person, firm or corporation to use or permit to use any building or structure for high-piled combustible storage which does not fully comply with the requirements of Chapter 23 IFC as amended, or without a High-Piled Combustible Stock Permit, if required.~~

2313.6 Appeals. The owner of a building or owner's duly authorized agent may appeal a decision of the Fire Chief or the Building Official related to this Section to the Building Board of Appeals, in accordance with Chapter 18.02 of the City Code.

(Ord. 16812 § 3 (part), 2007; Ord. 15964 § 1 (part), 2004)

9.52.~~110~~ - Chapter 27, Hazardous Materials—General Precautions—Amended.

~~A.~~

2703.3.1.1 is amended to read as follows:

2703.3.1.1 Records. Any person, firm, or corporation responsible for any unauthorized discharge reportable under subsection 2703.3.1.5(a) shall maintain accurate records of the unauthorized discharge of hazardous materials including the date, time, material, and quantities. Such records shall be kept for at least three years from the date of the unauthorized discharge, and shall be subject to inspection by the fire official upon request. Any person who knowingly falsifies or destroys such records shall be in violation of this code.

~~B.~~

2703.~~1.4.1~~ is added to read as follows:

2703.~~1.4.1~~ Response Expenses. Any person or persons causing or responsible for an abandonment or an unauthorized discharge or threatened unauthorized discharge of hazardous materials resulting in emergency action, other than routine investigation by the fire department, the department of environmental services, or any other city department, shall be jointly and severally liable to the city for its reasonably and necessarily incurred expenses, as defined below, resulting from such emergency action. Hazardous materials response expenses are defined as those non-

reusable materials and supplies which are required for responding to hazardous materials emergencies and which are actually expended in an emergency action. Hazardous materials response expenses are defined to also include reusable response equipment which is required for responding to hazardous materials emergencies and which is rendered non-reusable during an emergency action due to damage other than by wear and tear. Hazardous materials response expenses shall include overtime expenditures necessary to mitigate the incident. Hazardous materials response expenses shall not include traditional fire department services, such as routine firefighting services.

~~C.~~

2703.3.1.~~5~~ is added to read as follows:

2703.3.1.~~5~~ Local reporting requirements. The fire official shall be immediately notified by the person, firm or corporation responsible when an unauthorized discharge within the city limit boundaries or within the city's extra territorial jurisdictional boundaries, becomes reportable under state, or federal laws or as follows:

Any unauthorized discharge of a hazardous a. material which presents an endangerment to public health, public welfare, or the environment, or any unauthorized discharge of a flammable or combustible material which presents a fire hazard, or any unauthorized discharge of a hazardous material or exposure that results in an injury requiring transport to an off-site medical facility.

The person who has care, custody or control of b. property, materials or equipment shall promptly notify the Fire Official by calling 911 immediately upon discovery of an unauthorized discharge of any hazardous material reportable under subsection 2703.3.1.5(a) above. Immediate notification as required in this section shall be performed prior to or concurrently with necessary initial response actions, but under no conditions shall notification be delayed unnecessarily. At the time of notification the following information shall be provided:

What is the location of the incident? 1)

Has there been a fire or explosion? 2)

Is anyone sick or injured? 3)

What is the chemical name or identity of any material 4) involved in the release, if known?

If chemical name is unknown are any diamond shaped or 5) other markings visible on the vehicle or container? (colors/names/ numbers/symbols)

What type of vehicle or container is involved? 6)

What is an estimate of the quantity of material that 7) was released?

What was the time and duration of the release? 8)

Is there any smoke or vapor cloud visible, audible 9) sounds or unusual odor?

The name and telephone number of the person — or 10) persons to be contacted for further information.

~~D.~~

~~2703.5.2 is added to read as follows:~~

~~**2703.5.2 Product labeling.** Stationary or portable aboveground tanks containing a hazardous material or hazardous material residue shall be labeled with the product name for the specific material contained. Product name labels shall be placed in a clearly visible position on the tank or in near proximity to the tank in a clearly visible and distinguishable position.~~

~~E.~~

~~Section 2704.2.2, Exception #1 is amended to read as follows:~~

~~Liquids: Capacity of an individual vessel of 55-1. - gallons (208 L) or more.~~

~~F.~~

Section 2706 is added to read as follows:

2706 Transportation of Hazardous Materials

2706.1 Standing or parking. It is unlawful for a motor carrier or operator to allow motor vehicles used to transport hazardous materials to stand or park on any street, alley or lot within the limits of the city, except as provided for in accordance with Section 3406.6.2 of this code, unless the fire official issues a permit allowing such standing or parking. In granting or refusing such permit, the fire official shall be governed by the safety of the area in which the motor vehicle containing the hazardous material or materials is to be parked, and in accordance with 49 CFR 397.3, and as may be amended.

(Ord. 16812 § 51, 2007; Ord. 15964 § 1 (part), 2004)

9.52.~~120~~ - Chapter 33, Explosives and Fireworks—Amended.

~~A.~~

~~3301.1.1.1 is added to read as follows:~~

~~- **3301.1.1.1 Age requirements.** Persons 18 years of age or older may be allowed to use and handle explosive materials if they are under the direct personal supervision of a person who possesses a valid permit and license.~~

~~B.~~

~~3301.1.3, Exceptions 1, 2 and 4 are deleted.~~

~~1.~~

~~Section 3301.1.3.1 is added to read as follows:~~

~~- **Section 3301.1.3.1 Prohibition.** No person shall possess fireworks within the jurisdictional area of the city. No person shall manufacture, store, sell, handle, or use fireworks within the jurisdictional area of the city, except as provided in Sections 9.52.030(L) and 9.52.120(5) of this Chapter.~~

~~C.~~

3301.2.4 is amended to read as follows:

3301.2.4 Financial responsibility. Before a permit is issued, as required by Section 3301.2, the applicant shall file with the jurisdiction a corporate surety bond in the principal sum of $1,000,000 or a public liability insurance policy for the same amount, for the purpose of the payment of all damages to persons or property which arise from, or are caused by, the conduct of any act authorized by the permit upon which any judicial judgment results. The code official is authorized to specify a greater or lesser amount when, in his or her opinion, conditions at the location of use indicate a greater or lesser amount is required. Government entities shall be exempt from this bond requirement. The city shall be named as an additional insured on the insurance policy or an additional obligee under the corporate surety bond, at no cost to the city. A bond required by this section must be executed by a corporate surety in accordance with Article 7.19-1, Vernon's Texas Insurance Code and approved by the Fire Official. If applicable, an insurance policy shall be written by an accredited insurance company under the supervision of the Board of Insurance of the state. Evidence of compliance with this requirement shall be considered as having been met when the policy, a copy thereof, or a certificate of insurance has been filed with and approved by the Fire Official. Such policy shall include an endorsement that the Fire Official shall be notified at least ten ~~(10~~) days in advance in the event the policy or policies are canceled.

~~D.~~

~~3301.2.4.1.1 is added to read as follows:~~

~~- **3301.2.4.1.1 Hold harmless agreement.** The applicant shall be required to enter into a hold harmless agreement with the City. Applicant shall hold harmless, the city and any of its agents or~~

~~employees, for any personal injury, property damage or other civil liability whatsoever, caused by an activity, condition or event arising out of any act performed under the permit. The fire official shall provide the approved form for this hold harmless agreement.~~

~~**3301.2.4.1.2 Subsequent agreement.** The person or persons by whom a blaster is employed or under contract to such person or persons to perform blasting services, and the owner or owners of the site at which blasting is to take place if such owner or owners are different from the person or persons hiring the blaster, shall be required, as a condition of the blasting permit, to enter into a hold harmless agreement as set forth in subsection 3301.2.4.1.1 of this section.~~

~~E.~~

3301.6.1 is added to read as follows:

3301.6.1 Immediate Notification. In case of mechanical failure or traffic accident involving any conveyance carrying explosives, the fire official and the police department shall be notified immediately.

~~F.~~

3301.7.1 is added to read as follows:

3301.7.1 Disposal of explosives, explosive materials or fireworks. The City may file a Motion with Municipal Court requesting an Order of Disposal and/or Destruction for explosives, explosive materials and/or fireworks pursuant to authority granted by the 2003 International Fire Code, Section 3301.7. Said Motion shall be filed with a sworn affidavit of the Fire Official stating the underlying circumstances of the seizure and the City shall verify that the explosives, explosive materials and/or fireworks are not being held as evidence to be used in any pending case. A hearing shall be held before a judge of the El Paso municipal court. A judge shall, as soon as practicable, hear the matter, after giving reasonable notice to the Fire Official and the person whose explosives, explosive materials and/or fireworks have been removed or impounded. The Fire Official and the person whose explosives, explosive materials and/or fireworks have been removed or impounded shall each have the opportunity to present evidence and make argument on their behalf. The formal rules of evidence do not apply to a hearing under this section.

The judge hearing the case shall make his or her ruling on the basis of a preponderance of the evidence presented at the hearing. If the judge finds that the explosives, explosive materials and/or fireworks were lawfully seized and that, at the time of the hearing, the explosives, explosive materials and/or fireworks constitute materials or other items that cannot be lawfully possessed, stored, handled or used in the jurisdictional limits of the city, the judge shall grant the motion. The decision of the judge is final.

~~G.~~

3302 Definitions is amended as follows:

The definition of "Blaster's license" is added to read as follows:

BLASTER'S LICENSE—A blaster's license is defined as an instrument issued by the fire official authorizing certain individuals to engage in loading, firing, or supervision of the loading or firing of explosive materials in accordance with pertinent ordinances, resolutions and regulations in the city.

~~H.~~

The definition of "Flame effects" is added to read as follows:

FLAME EFFECTS. Flame effects means a stationary or hand-held device of solid, liquid, or gas, designed specifically to produce an open flame when ignited to display a thermal, physical, visual, or audible phenomenon as defined in NFPA 160. Such devices include paraffin wax candles, LP gas candles, torches, and LP-gas burners.

~~I.~~

3303.2.1 is added to read as follows:

3303.2.1 Blasting records. Records of blasting operations shall contain the following information:

1. A copy of the blasting permit application;

2. A revised copy of the blasting plan containing actual data for the blast;

3. Actual date and time of day of the blast;

4. Weather conditions at the time and location of the blast, if the blast is conducted outdoors; and

5. Ground vibration or airblast records, if required, which shall include the following:

a. Type of instrument, sensitivity and calibration signal or certification of annual calibration;

b. Exact location of instrument and the date, time and distance from the blast;

c. Name of person and firm taking the reading as well as the person analyzing the seismic record; and

d. The vibration and airblast level recorded.

Exceptions: The requirements of #2 and #5 above shall not apply to the following uses of explosives within the city:

A. Blasts under two (2) pounds of explosives in total weight per blast; or

B. Notwithstanding the location of developed property within the jurisdictional area and within one-half (½) mile of any boundary of a permitted area, blasts for which the maximum peak particle velocity for ground vibration in inches per second does not exceed 0.50 at the nearest developed property by use of the scaled-distance equation.

~~J.~~
3307~~.1.1~~ is added to read as follows:

3307.~~1.1~~ Permit Required. A blasting permit shall be required for the use of explosives or blasting agents, for blasting purposes, at a specified location. A blasting permit shall be renewed upon application for renewal, provided that:

1.~~-~~The permit fee set forth in ~~Table 112~~, below, is submitted along with the application for renewal;

2. The blasting activities at the specified location are anticipated to remain materially unchanged; and

3. The applicant has complied with the requirements of this chapter and Chapter 33 during the preceding year.

3307~~.1.1.1~~ Application. Only persons who have been granted a Blaster's license under Section 3307.1 may apply for a blasting permit. Applications shall be filed with the code official and accompanied by all documentation required by this chapter and the payment of fees as required. Permits for blasting shall be granted by the code official if he finds that the proposed blasting would not be dangerous to persons or property, considering the location of the proposed work and its distance from buildings, structures, streets, public places or places likely to be frequented by persons or animals; the nature of the soil in the location of the proposed work; the type of explosive and amount of the charge to be used; the manner of doing the work; the prior performance and safety record for blasting work performed in the past at the same site (where applicable); and the skill and experience of the workmen employed and the persons doing the work. Otherwise, the permit shall be refused, and the code official shall state in writing the reason or reasons for the refusal.

~~**3307.1.1.2 Permit.** Each blasting permit applicant shall comply with the requirements of this code. The blasting permit application shall meet the following parameters, depending upon the type of use, as described below:~~

3307.~~1.1.2.1~~ Ongoing Industrial Blasting Applicants

a. For all blasting permit applicants seeking to conduct ongoing industrial blasting using:

1. Blasts using under two (2) pounds of explosives in total weight;

2. Blasts which do not utilize a blasthole charge into a geologic structure for the purpose of causing rock fragmentation and displacement; or

3. Blasts for which the maximum peak particle velocity for ground vibration in inches per second does not exceed 0.50 at the nearest developed property by use of the scaled-distance equation;

The blasting permit application shall include:

1. Name of operator or operators conducting the blasts;

2. Identification of the anticipated location or locations of blasting activities;

3. Description of conditions, if any, which may cause possible adverse blasting effects;

4. Type of material to be blasted;

5. Number and type of delays to be used;

6. Types of explosives anticipated to be used;

7. Type and length or stemming;

8. Mats or other protection to be used, if any;

b. Where approved by the fire official, ongoing industrial blasting applicants meeting the criteria listed above, shall be excepted from the requirements of Sections 3307.2.1, Blast Plan; 3307.2.2, Test Blast; 3307.1.4, Pre-blast Survey; and 3307.16, Environmental Performance Standards.

3307.~~1.1.2.2~~ All Others. All other blasting permit applicants shall submit the following:

1. Name of operator conducting the blast;

2. Approximate date and time of the blast;

3. Location of blast site;

4. Name(s) of licensed blasters on the job;

5. Copy of MSHA Certificate of Training (Form 5000-23) for all personnel involved in the drilling and blasting operation;

6. Copy of Insurance Certificate of Blasting Liability Coverage.

The code official may require additional information.

~~K.~~
3307~~.1.2~~ is added to read as follows:

3307.~~1.~~2 Blaster's License

3307~~.1.2.1~~ Requirements. To qualify for a blaster's license, the applicant must demonstrate that he has had adequate training and experience in the handling and use of explosive material which will be a minimum of eight hours and shall pass an examination prepared by the fire official. The examination may be written, oral or by such other means as may be necessary to determine the following, which are requirements for the issuance of a license. An applicant for a blaster's license shall:

1. Present positive identification;

2. Be fingerprinted by the police department;

3. Show proof that the applicant has not been convicted of a crime involving moral turpitude. This requirement may be waived by the fire official or the Building Board of Appeals;

4. Be at least twenty-one years of age;

5. Be in adequate physical and mental condition to perform the work required;

6. Be able to understand and give written and oral directions in the English language;

7. Not be addicted to alcohol or to narcotics and other dangerous drugs;

8. Be qualified by reason of training, knowledge and experience in the field of transporting, storing, handling and use of explosive materials;

9. Have a working knowledge of federal, state and local laws and regulations pertaining to explosive materials; and

10. Have no revoked, suspended or terminated license, or have a revocation, suspension or termination on appeal pursuant to Section 3307.1.2 of this chapter, or any criminal action involving blasting activities pending in a federal, state or municipal court of law.

3307~~.1.2.2~~ Failure to Pass. If an applicant for a blasting license fails to pass the required examination, he shall not be eligible for reexamination for a period of sixty days. If an applicant fails to pass the required examination at any subsequent time, he shall not be eligible for reexamination for a period of six months following such failure.

3307~~.1.2.3~~ License Fee. A fee in accordance with ~~Section 112~~ of this code shall be paid for each license application and shall be non-refundable. Annual license renewal fee(s) shall be in accordance with ~~Section 112~~ of this code and not refundable. The applicant must renew the license within thirty days of the date of expiration or he will be required to pass the examination required for such license. The holder of such license shall furnish proof that an eight hour refresher course involving the use of explosives has been taken at least once during the preceding permit year.

3307~~.1.2.4~~ Applicability of License. A license issued under this chapter shall remain in full force for one year from the date it was issued unless revoked, suspended or terminated by the fire official.

Reexamination may be required by the fire official before a license is renewed should the performance of any individual licensee indicate the need for such reexamination.

3307~~.1.2.5~~ License Transfer Prohibited. No license shall be re-assigned or transferred.

~~L.~~

3307.~~1.3~~ is added to read as follows:

3307.~~1.3~~ Blaster's License—Suspension and Revocation

3307.~~1.3.1~~ Condition of License. All licenses approved under this article are conditioned on all work being performed in faithful and strict compliance with the terms of all federal and state laws, permits, pertinent regulations, ordinances and resolutions of the city. Any violation of such conditions shall be deemed a misdemeanor and be punished in accordance with the city code. Citation for a violation of this chapter shall not preclude suspension or revocation of a license or permit.

3307.~~1.3.2~~ Notice. The fire official may suspend a blaster's license or permit for any violation of the conditions set forth in subsection 3307.~~1.2.1~~ of this section, pending a hearing by the fire official to determine whether a license or permit should be further suspended or revoked. Reasonable notice of such hearing shall be given to the license holder. For purposes of this section, notice shall be considered given when delivered personally or when received if notice is given by other means, but in no event later than three days after deposit of such notice with the United States postal services, postage fully prepaid, addressed to the last known address of the person to whom the notice is sent. The hearing provided for herein shall be held as expeditiously as reasonably possible.

3307.~~1.3.3~~ Legal Ramifications. The use of explosives regulated by this chapter during any period of suspension or revocation of a license or permit shall be considered a misdemeanor and punished as provided in the city code.

3307.~~1.3.4~~ Reapplication. A person whose blaster's license has been revoked may not apply for another license until the expiration of one year from the date of the revocation.

3307.~~1.3.5~~ Hearing. At any hearing conducted pursuant to this section, the respondent shall have the right to present evidence, to cross-examine available witnesses, to make statements and arguments on his behalf and to be represented by counsel. The technical rules of evidence shall not apply. The fire official shall reach a decision based upon a preponderance of the evidence.

~~M.~~

3307.~~1.4~~ is added to read as follows:

3307.~~1.4~~ Appeal. A person whose license or permit has been suspended or revoked or whose application for a license or permit has been denied may appeal to the building board of appeals, in accordance with ~~Chapter 18.02~~ of the city code provided a request for appeal is delivered in writing to the fire official within ten business days after notice of the suspension, revocation or denial of a license or a permit. In the case of a suspension or revocation, the suspension or revocation shall remain in effect until the appeal has been heard and decided.

~~N.~~

3307.~~1.5~~ is added to read as follows:

3307.~~1.5~~ Pre-blast Surveys

3307.~~1.5.1~~ When Required. Subject to the exceptions as set forth in Sections 3307.~~1.1.2.1(b)~~ and 3303.~~2.1~~, a pre-blast survey shall be required of any structure(s) that might later be the basis for blast damage claims or whenever a survey is required by the fire official.

3307.~~1.5.2~~ Notification. The owner or residents of such buildings must be contacted by letter at least sixty days before the start of blasting, notifying them of the pre-blast survey and how they may request a copy of the pre-blast survey. The contractor shall employ an independent professional engineer licensed in the state of Texas and capable of conducting a pre-blast survey, in accordance with the Blasting Guidance Manual (U.S. Dept. of Interior, Office of Surface Mining), to determine and note any pre-existing structural or cosmetic defects to nearby structures that might later be the basis for damage claims.

3307.~~1.5.3~~ Written Report. A written report of the survey shall be signed by the person conducting the survey and provided to the fire official, at least two working days prior to any

blasting to be filed with the permit. Copies shall be made available to regulatory agencies and persons requesting the survey. Application fees may be charged for reproduction of the survey.

~~O.~~
3307.~~2.1~~ is added to read as follows:

3307.~~2.1~~ Blast Plan. Subject to the exceptions set forth in subsection 3307.~~1.1.2.1(b)~~ of this code, prior to commencing drilling or blasting operations, the contractor shall submit for approval, a written Blast Plan with all pertinent data to include the following:

1. Date and time of blast;
2. Type of explosives to be used;
3. Total pounds of explosives to be used for each blast;
4. Diagram showing number of holes and typical hole load;
5. Burden, spacing, depth and diameter of holes and stemming used;
6. Pre-blast and All Clear Signal plan;
7. Technical data and Material Safety Data Sheets for all explosives used;
8. Fire sequence diagram, delay sequence and maximum pounds per delay;
9. Blast location and distance of blast from any structure(s) of concern; and
10. Seismograph data.

The contractor shall also submit a Blast Plan, for approval, any time he plans to make a change such as drill pattern, maximum pounds per delay, delay sequence, explosive type, etc. Every Blast Plan must be approved by the fire official before drilling and blasting operations can begin. There might be extenuating circumstances, such as quarry operations, where the fire official can, at his discretion, allow the contractor to make certain changes without submitting another proposal. The contractor must however note any changes, showing date, and type of changes made, and keep this as part of the permanent record.

3307.~~2.2~~ Test Blast. Subject to the exceptions set forth in subsection 3307.~~1.1.2.1(b)~~ of this code, before regular production blasting can begin the contractor shall make a test blast to ensure that vibrations are within safe limits, and the rock is adequately fragmented to ensure excavation. This will require the contractor to actually dig this test blast. During the test blast an Independent Blast Monitoring Engineer shall place multiple seismographs, in such an array as to determine vibration levels, frequency range, and Scaled Distance.

~~P.~~
3307.~~4~~ is amended to read as follows:

3307.~~4~~ Restricted hours. Blasting operations shall be conducted during daylight hours except when authorized at other times by the fire official. When there is developed property within one-half (½) mile of any permit boundary, blasting operations shall be conducted only between the hours of nine (9) a.m. and five (5) p.m. Monday through Saturday. No blasting shall be conducted on Sunday except that the fire official may give special permission for nighttime and Sunday blasting whenever safety considerations so require.

~~Q.~~
3307.~~9.1~~ is added to read as follows:

3307.~~9.1~~ Stemming Material. Crushed rock (not pea gravel) shall be used for stemming blast holes. A guide to ideal rock sizes is as follows:

Hole dia.	Rock size
1 ½″ holes	⅜″ minus
2″—3 ½″ holes	⅜″—½″
4″—5″ holes	⅝″
5″ and above	¾″ minus

~~R~~.
3307.~~9.2~~ is added to read as follows:

3307.~~9.2~~ Relief Trenches. If it is not possible to keep vibrations within acceptable levels, the fire official can require that a 12″ minimum width trench between the blast and affected structures be dug. The trench must be excavated and free of debris and water, to a depth of at least 2 feet below any blast holes being fired in a given lift. No blast holes can be located within a distance from the trench of 1.7 times the blast hole diameter converted to feet. Example: If the hole diameter is 3 inches, the nearest a blast hole could be located to a trench is 5 feet (round off to the nearest foot).

~~S.~~
3307.~~10.1~~ is added to read as follows:

3307.~~10.1~~ Explosive Storage at Blast Sites. All explosives must be stored in accordance with Federal, State and Local laws and all magazines must be inspected and approved by ATF, or MSHA. The quantity of explosives on the blast site shall be subject to approval by the fire official, and no more than a one (1) day supply of explosives shall be stored on the blast site at any time. Explosives cannot be stored on the blast site when no blasting operations are ongoing.

~~T.~~
3307.~~16~~ is added to read as follows:

″ **3307.~~16~~ Environmental Performance Standards.** [Subject to the exceptions set forth in subsection 3307.1.1.2.1(b) of this code.]

″ **3307.~~16.1~~ Blast Monitoring and Video Recording Requirements.**

″ **3307.~~16.1.1~~ Monitoring.** The contractor shall monitor each blast. Permanently installed "constant recording" instruments can be set-up that will record any event of a recordable magnitude, as long as they meet the following criteria:

1. Three seismic and one acoustic channel;

2. Selectable seismic and acoustic trigger levels;

3. Analyze velocity, acceleration, displacement and resultant;

4. Measure both linear and A-weighted sound;

5. 10 inches sound recording range;

6. Selectable maximum recording range;

7. Response 2—200 hertz;

8. Full waveform memory storage;

9. OSM/USBM charts printed; and

10. Adjustable record duration.

3307.16.~~1.2~~ Seismograph. The seismogram recorded for each blast will be included with the shot report as part of a permanent record. The contractor shall place a sufficient number of seismographs to record required data during the blast(s).

3307.16.~~1.3~~ Video. The contractor will also videotape each blast. The date, time, and number of holes shall be noted visually or vocally, and the videotapes shall be retained as part of the permanent record of the blast(s).

3307.~~16.1.4~~ Nearby Structures. If the job is too critical as far as nearby structures are concerned, an independent Blast Monitoring Firm must be employed to monitor all blasts that might affect the structure(s). The blast monitors shall be in compliance with the above criteria.

3307.~~16.2~~ Ground Vibrations. Ground vibrations shall be limited as follows:

1. Whenever there is developed property within one-half mile of any boundary of a permitted area, the maximum peak particle velocity, as measured by seismographic monitoring, is not to exceed the recommended vibration limits presented in USBM Report RI 8507 by D.E. Siskind, M.S. Stagg, J.W. Kopp, and C.H. Dowding (U.S. Dept. of Interior), and a computerized response versus frequency technique known as Response Spectrum Velocity Profile (RSVP).

2. Whenever there is no developed property within one-half mile of any boundary of the permitted area, the scaled distance formula may be used:

$$W=(D/Ds)2$$

Where "W" = the maximum weights of explosives, in pounds, Where "D" the distance, in feet, from the blasting site to the nearest developed property, and Where "Ds" is always equal to 70 ft/lb.

3. Vibration Limits. Blasting vibrations can cause "threshold" damage to residential structures when the energy is within the frequency range of 4 - 12 hertz. Within this frequency range a 0.5 inch per second maximum particle velocity, at the structure, is required to preclude any threshold damage. Above 12 hertz the allowable vibration increases as the frequency increases, up to 40 hertz. Above 40 hertz the maximum allowable vibration is 2.0 inches per second maximum particle velocity, at the structure. In order to determine the potential effects of vibrations versus frequency, the blast monitor must be capable of presenting a Response Spectrum Velocity Profile (RSVP). This is also referred to as the OSM/USBM, or USBM RI 8507 & OSMRE Analysis (in./sec.). The OSM/USBM should appear on the Blast Monitor Record, and a copy of this seismic data included with each blast report given to the fire official.

3307.~~16.3~~ Airblast Levels. Efforts should be made to keep airblast levels to one hundred ten (110) DBL (2 Hz high-pass)-anywhere along the permit boundary in order to reduce annoyance and complaints as much as possible. Monitoring for this parameter must include a microphone in the downwind direction. Airblast shall however, be limited to

Lower Frequency Limit of Meas. sys. (Hz)	Max level in dB
0.1 Hz or lower—flat response*	134 dB peak
0.2 Hz or lower—flat response	133dB peak
0.6 Hz or lower—flat response	129dB peak
C-weighted—slow response*	105dB peak

the following safe maximum levels:

Editor's note—

Only when approved by the fire official. *

~~U.~~
3308.2 is amended to read as follows:

3308.2 Permit applications. Application for permits shall be made in writing to the fire official at least 10 days in advance of the date of display. Prior to issuing permits for fireworks display, plans for the display, inspections of the display site, and demonstrations of the display operations shall be approved.

3308.2.3 is added as follows:

3308.2.3 Indoor displays. If pyrotechnics are used inside a building, the building must contain a complete operational fire-sprinkler system or provide personnel to implement a standby fire watch acceptable to the fire official.

~~V.~~
Section 330~~9~~ Flame Effects is added.

~~3309.1~~ **General.** The use of flame effects for entertainment, exhibition, demonstration, or simulation must comply with NFPA 160.

~~3309.2~~ **Permit application.** Prior to issuing permits for flame effects, plans for the exhibition, inspections of the exhibition site, and demonstrations of the flame effects shall be approved by the code official.

~~3309.3~~ **Indoor use.** If flame effects are used inside a building, the building must contain a complete operational fire-sprinkler system or provide personnel to implement a standby fire watch acceptable to the fire official.

~~3309.4~~ **Financial Responsibility.** Before a permit is issued for any flame effects exhibition, the applicant must provide evidence of financial responsibility as set forth in section 3301.2.4.

~~3309.5~~ **Texas flame effects operator's license required.** At least one Texas flame effects licensee must be present on-site at all times where flame effects are used, discharged, or ignited.

(Ord. 16812 § 3 (part), 2007; Ord. 15964 § 1 (part), 2004)

9.52.~~130~~ - Chapter 34, Flammable and Combustible Liquids—Amended.

~~A.~~
3405.3.8.2 Exception 3 is added as follows:

3. Mobile fueling dispensing activities shall not be conducted within 30 feet (9144 mm) of buildings, building openings, combustible materials, lot lines, public alleys or public ways.

~~B.~~
3406.1.2 is added to read as follows:

3406.1.2 Restricted Locations. It is unlawful for any individual, firm, partnership or corporation within the city limits, to install, enlarge or operate a bulk oil station, refinery, or distilling plant, except when such places conform in location and construction and maintain distances and safeguards as hereinafter specified. All storage of oils and gasoline in Classes I and II for the purpose of refining, or distilling or jobbing, or wholesaling, and handled by motor vehicles for delivery, must be installed within the below specified districts, as hereafter designated.

~~C.~~
3406.1.3 is added to read as follows:

3406.1.3 Designated Districts. The districts in which refineries, wholesale oil stations, or bulk stations may be located are described as follows:

3406.1.3.1 Beginning at the centerline of Durazno Avenue and the centerline of Ledo Road southerly to the north line of Rosa Avenue; thence easterly three hundred seventy-five feet in a straight line; thence northerly to the centerline of Durazno Avenue; thence westerly to the point of beginning, to include Ritchie Distributing Company, 4700 Durazno Avenue.

3406.1.3.2 Beginning at the intersection of Texaco Road and the north line of Southern Pacific Railroad tracks; thence westerly along the railroad tracks to the east line of Clark Road, thence north along the east line of Clark Road to the south line of Welch Avenue; thence easterly along the south line of Welch Avenue to the south line of Tampa Avenue; thence east along the south line of Tampa Avenue to the west line of the Western Refining South Plant; thence northerly along the west line of Western Refining South Plant to the west line of the Western Refining North Plant; thence northerly along the west line of the Western Refining North Plant to the south line of Gateway Boulevard East; thence easterly along the south line of Gateway Boulevard East to the east line of Airway Boulevard; thence northerly along the east line of Airway Boulevard to the south line of Viscount Boulevard; thence easterly along the south line of Viscount Boulevard to the east line of the Trans Mountain Oil Co.; thence southerly along the east line of the Trans Mountain Oil Co. to the north line of Gateway Boulevard West; thence westerly along the north line of Gateway Boulevard West to the east line of Airway Boulevard; thence south along the east line of Airway Boulevard to the south line of Gateway Boulevard East; thence easterly along Gateway Boulevard East to the east line of Hawkins Road; thence southerly along the east line of Hawkins Road to the east line of Phelps Dodge Refinery; thence southerly along the east line of Phelps Dodge Refinery to the south line of Phelps Dodge Refinery; thence westerly along the south line of Phelps Dodge Refinery to the east line of Western Refining North spur track; thence southerly along the east line of the spur track to the north line of Southern Pacific Railroad track; thence westerly along the north line of Southern Pacific Railroad tracks to the point of beginning to include Western Refining South Plant, Western Refining North Plant, Trans Mountain Oil Co., Navajo Oil and all property contained within the boundary specified in this section.

3406.1.3.3 Beginning at the intersection of the centerline of Lafayette Drive and the centerline of San Paulo Drive westerly to the east side of Lot 7, Block 28; thence northerly to the south line of Lot 1, Block 39; then easterly to the centerline of Lafayette Drive; thence southerly to the point of beginning, to include the Municipal Service Center.

3406.1.3.4 Beginning at a point marked by the intersection of the centerline of Beech Street and the northerly right-of-way line of Boeing Drive; thence westerly along the centerline of the Boeing Drive separation median to a point on the east line of Lot 24, Block 4, El Paso International Airport Tracts; then northerly along the east line of Lot 24, Block 4, extended to a point on the south edge of a fifty-foot wide service taxiway; thence westerly along the south edge of the taxiway to a point opposite the easterly line of Lot 10, Block 4, El Paso International Airport Tracts, extended; thence southwesterly to and along the said easterly line of Lot 10, Block 4, to a point lying one hundred twenty-five feet northerly of the north right-of-way line of Boeing Drive; thence northwesterly perpendicular to the above line across Lot 10, Block 4, to a point lying in the westerly line of the Lot 10, Block 4; thence westerly to a distance of two hundred seventy-five feet to a point lying seventy-five feet north of the northerly right-of-way line of Boeing Drive and being within Lot 9, Block 4, El Paso International Airport Tracts; thence northerly through the remainder of Lot 9, Block 4, and through Lot 8, Block 4, to a point being the southeasterly corner of Lot 6, Block 4, El Paso International Airport Tracts; thence northeasterly across Lot 5, Block 4, to a point being the northeasterly corner of Lot 4, Block 4, El Paso International Airport Tracts; thence northeasterly through the approximate centers of Lots 1 and 2, Block 4, El Paso International Airport Tracts to a point lying in the northeasterly right-of-way line of Northrup Road; thence northwesterly along the right-of-way line of Northrup Road to a point in the southerly right-of-way line of American Drive; thence northeasterly along the southerly right-of-way line of American Drive to a point in the southwesterly right-of-way line of Convair Road; thence southeasterly along the right-of-way line of Convair Road and along an extension of said line for a total distance of seven hundred feet to a point; thence perpendicular to the above line northeasterly a total distance of two hundred fifty feet to a point; thence perpendicular to the above line northwesterly to a point; the point being an intersection of this line with the northerly right-of-way line of Convair Road extended; thence westerly along the northerly right-of-way line of Convair Road extended to an intersection with a

line being an extension of the east line of Taxiway "A"; thence north along said extension of the east line of Taxiway "A" to a point being on the southeasterly line of Runway 4-22; thence northeasterly along the southeasterly line of Runway 4-22 to an intersection with the south line of the Runway 8-26 (left) stopway; then easterly along said south line of the Runway 8-26 (left) stopway to an intersection with the easterly line of Taxiway "M" thence southeasterly along the easterly line of Taxiway "M" to an intersection with the north line of Military Cargo Apron; then easterly along the north line of the Military Cargo Apron and along an extension of said line for a distance of approximately one thousand one hundred fifty feet to a point; thence northeasterly parallel to the northerly property line of Block 17, El Paso International Airport Tracts for a distance of approximately one thousand eight hundred feet to a point; thence easterly to a point lying in the extended easterly property line of Lot 8, Block 17, El Paso International Airport Tracts, the point also being one hundred twenty-five feet north of the northwest corner of the Lot 8, Block 17; thence southerly to a point being the northwesterly corner of Lot 9, Block 17 (FAA Tower Site); thence westerly to a point being the midpoint of the east line of Lot 6 and the west line of Lot 7, Block 17, El Paso International Airport Tracts; thence southwesterly on a line intersecting the midpoints of the lot lines through Lots 6, 5, 4 and 3 and the line extended straight across Lots 1 and 2 to an intersection with the northerly right-of-way line of Boeing Drive; thence westerly along the northerly right-of-way line of Boeing Drive to the point of beginning; all of which has been laid out and marked on the plat entitled "El Paso International Airport Wholesale Gasoline and Fuel District" and dated April 11, 1968.

3406.1.3.5 A portion of Lots 7 and 8, Block 17, El Paso International Airport Tracts, Units 9, El Paso County, Texas, being more particularly described by metes and bounds as follows to wit; from a point, said point being the common southerly corner of Lots 6 and 7, Block 17, El Paso International Airport Tracts, Unit 9, the point also lying in the northerly right-of-way line of Centurion Drive; thence along the northerly right-of-way line of Centurion Drive 30.00 feet along the arc of a curve to the right, whose central angle is 3°11′00″ whose radius is 540.12 feet and whose chord bears North 69°43′31″ East a distance of 30.01 feet to a point, said point lying on the northerly right-of-way line of Centurion Drive, said point also being the point of beginning; thence North 21°5l′59″ West a distance of 264.79 feet; thence North 81°10′07″ East a distance of 402.14 feet; thence South 8°49′53″ East a distance of 250.00 feet to a point, the point lying on the northerly right-of-way line of Centurion Drive; thence South 81°10′07″ West continuing along the northerly right-of-way line of Centurion Drive a distance of 250.00 feet; thence continuing along the northerly right-of-way line of Centurion Drive 92.87 feet along the arc of a curve to the left, whose central angle is 9°51′06″ whose radius is 540.12 feet and whose chord bears South 76°14′34″ West a distance of 92.76 feet to the point of beginning and containing in all 2.148 acres of land, more or less, to include Chevron Oil Products.

~~D.~~

3406.5.4.5 Commercial, industrial, governmental or manufacturing. Is amended as follows:

1. Dispensing shall occur only at sites that have been permitted to conduct mobile refueling as per section 105.6.~~11~~ (Flammable and combustible liquids) of ~~the International Fire Code 2003 Amendments.~~

2. The representative of a mobile fueling operation shall provide to the jurisdiction a written response plan which demonstrates readiness to respond to a fuel spill and carry out appropriate mitigation measures, and describes the process to dispose properly of contaminated materials.

6. Mobile fueling operations shall not take place within 30 feet of buildings, property lines or combustible storage.

~~E.~~

3406.5.11 Switch loading. Exception added:

Exception: Switch loading is permitted when all precautions and practices are met in accordance with API, RP 2003 — 1998 Protection Against Ignitions Arising out of Static, Lightning, and Stray Currents.

~~F.~~

3406.6.1.3 is amended as follows:

Exception: Tank vehicles where the operator carries and can utilize a remote emergency shut-off device which, when activated, immediately causes flow of fuel from the tank vehicle to cease.

(Ord. 15964 § 1 (part), 2004)

9.52.~~140~~ - Chapter 38, Liquefied Petroleum Gases—Amended.

~~A.~~
3801 is amended to read as follows:

3801 Scope. Storage, handling and transportation of LP-gas and the installation of LP-gas equipment pertinent to systems for such uses shall comply with this chapter, The Railroad Commission of Texas - Liquified Gas Safety Rules and NFPA 58. Properties of LP-gases shall be determined in accordance with Appendix B of NFPA 58.

~~B.~~
3803.2.1.7, Use for food preparation, is amended as follows:

3803.2.1.7 Use for food preparation. Where approved by the fire official, listed LP-gas food service appliances are allowed to be used for food-preparation for special events and in attended commercial food-catering operations in accordance with the International Fuel Gas Code, the International Mechanical Code, NFPA 58, and the Texas Railroad Commission Liquefied Petroleum Gas Safety Rules.

~~C.~~
3804.2 is amended as follows:

3804.2 Prohibited storage within established limits. Within the limits of the fire district(s), as described in Chapter 18.08 of the City Code, it shall be unlawful for any person, whether as owner, partner, lessee, manager or agent, to construct maintain or operate any tank or other equipment for the storage or dispensing of liquefied petroleum gases, or to store, transport or dispense the same.

~~D.~~
3804.2, Exception, is deleted.
~~E.~~
3805.3 is added as follows:

3805.3 Natural gas service. LP-gas shall not be used in lieu of natural gas to fuel any gas-fueled appliances in any building, residence, or manufactured home located within 300 feet of a natural gas line.

Exceptions:

1. LP-gas fueled-cooking devices ~~intended~~ for outdoor use.

2. Buildings, residences, and manufactured homes properly equipped with LP-gas appliances ~~at the adoption~~ of the 2003 International Fire Code with amendments.

(Ord. 16812 § 3 (part), 2007; Ord. 15964 § 1 (part), 2004)

~~9.52.150 -~~ Chapter ~~45,~~ Referenced Standards ~~—Amended.~~

~~A.~~
API, RP 2003 — 1998 Protection Against Ignitions Arising out of Static, Lightning, and Stray Currents is amended as follows:

Section 3406.5.1.11 is added to the "Referenced in code section number"

(Ord. 15964 § 1 (part), 2004)

9.52.~~160~~ - Appendix A, Fee Schedule—Amended.

A101 License Fees.

A101.1 The Fire Official is authorized to charge a separate fee for each license and permit required by this code in the amount identified in the adopted budget resolution for the current fiscal year or other appropriately adopted resolution by the city council. Among the various licenses for which the Fire Official is authorized to charge a fee is the commercial child day care facilities license. When hourly rates are specified in the budget resolution or other appropriately adopted resolution by the city council, the minimum charge shall be as specified in the resolution. There shall be no reduction in the hourly rate based on services performed taking less than the full hour.

Within the ordinance, budget resolution, application forms, and adopted IFC and amendments, the term license may be also identified by and interchanged with the term permit.

A102 Reinspection fees. For any re-inspection required because the facility and/or fire system failed to comply with this code or because the work was not ready for the inspection as requested; or the request is for a partial inspection, partial acceptance and/or phase inspection a fee shall be in an amount identified in the adopted budget resolution for the current fiscal year or other appropriately adopted resolution by the city council. Inspections conducted by fire fighting companies requiring a Fire Inspector follow-up shall be assessed a re-inspection fee in an amount identified in the adopted budget resolution for the current fiscal year or other appropriately adopted resolution by the city council.

A103 Investigation/Inspection fees. For any investigation or inspection which is not a part of a regular license or permit program, whether during regular duty hours or at a time other than regular duty hours, the fee shall be identified in the adopted budget resolution for the current fiscal year or other appropriately adopted resolution by the city council. Said fee may be in addition to any other required fees.

A104 Fire watch/Standby. The Fire Official, as defined in the IFC, shall have authority to require a fire-watch, as defined by the section 202 IFC. Fire watch personnel shall be referred to as fire guards, and shall comply with NFPA 601, Standard for Security Services in Fire Loss Prevention. If El Paso Fire Department personnel function as fire guards, whether during regular duty hours or other than regular duty hours, a fee shall be assessed in an amount identified in the adopted budget resolution or other appropriately adopted resolution by the city council for the current fiscal year. Fire guards shall not be assigned to other duties that will interfere with their fire watch function.

A105 Site assessments/Non-regulatory inspections. Inspections that are outside the regulation of the International Fire Code or an ordinance of the City of El Paso, and are not initiated by the El Paso Fire Department, shall be assessed a fee as specified in the adopted budget resolution for the current fiscal year or other appropriately adopted resolution by the city council. Such inspections include those requested in order to comply with an applicable government regulation, or which are solely for the purpose of consulting or pre-construction guidance. Home fire safety inspections shall be offered without charge.

A106 Commercial safety training. Commercial for-profit entities requesting fire safety training to comply with applicable government regulation shall be assessed a fee as specified in the adopted budget resolution or other appropriately adopted resolution by the city council for the current fiscal year.

A107 Fire systems. A fee shall be assessed in an amount identified in the adopted budget resolution for the current fiscal year or other appropriately adopted resolution by the city council for the

plan review and a separate fee shall be assessed for all initial acceptance tests/site inspections exclusive to El Paso Fire Department review. Fire systems failing inspection, in whole or in part, shall be assessed a re-inspection fee in an amount identified in the adopted budget resolution for the current fiscal year or other appropriately adopted resolution by the city council.

A108 Building permit fire finals. Fire final inspections for building permits shall be assessed a fee in an amount identified in the adopted budget resolution for the current fiscal year or other appropriately adopted resolution by the city council.

A109 Expedited services fees. A fee shall be assessed for expedited inspections, customized plan review, and plans reviewed by appointment upon request in an amount identified in the adopted budget resolution for the current fiscal year or other appropriately adopted resolution by the city council. Such services shall be subject to availability and the approval of the Fire Official.

(Ord. 15964 § 1 (part), 2004)

(Ord. 17160, § 1, 8-11-2009)

9.52.~~171~~ - Appendix D, Fire Apparatus Access Roads—Amended.

~~A.~~

D103.l is amended to read as follows:

D103.1 Access road width with a hydrant. Where a fire hydrant is located on a fire apparatus access road, the minimum road width shall be 28 feet (8534 mm). See Figure D103.l

~~B.~~

D103.2 is amended to read as follows:

D103.2 Grade. Fire apparatus access roads shall not exceed 11 percent in grade.

Exception: Grades steeper than 11 percent as approved by the fire chief.

~~C.~~

D103.4 is amended to read as follows:

D103.4 Dead ends. Dead-end fire apparatus access roads in excess of 250 feet (76.2 m) shall be provided with width and turnaround-provisions in accordance with Table 103.4.

~~D.~~

Length (feet)	Width (feet)	Turnarounds required
0-250	20	None required
251-300	20	60 feet "T cul-de-sac", 60 feet "Y" or 90 feet diameter cul-de-sac in accordance with Figure D103.1
301-~~1,000~~ See Note 1	20	90 feet diameter cul-de-sac in accordance with Figure D103.1
Over 1,000 See Note 1	Special approval required	Special approval required

Table 103.4 is amended to read as follows:

~~Length (feet)~~	~~Width (feet)~~	~~Turnarounds required~~
~~0-250~~	~~20~~	~~None required~~
~~251-300~~	~~20~~	~~60 feet "T cul-de-sac", 60 feet "Y" or 90 feet diameter cul-de-sac in accordance with Figure D103.1~~
~~301-1,000 See Note 1~~	~~20~~	~~90 feet diameter cul-de-sac in accordance with Figure D103.1~~
~~Over 1,000 See Note 1~~	~~Special approval required~~	~~Special approval required~~

Note 1 - Intermediate turnarounds will be required, spaced at a maximum distance of 750′ apart.

~~Note 1 - Intermediate turnarounds will be required, spaced at a maximum distance of 750′ apart.~~

~~E~~.
DI03.5 Fire apparatus access road gates, criteria # 1 is amended as follows:

D103.5 Fire apparatus access road gates.

1. The minimum gate width shall be 20 feet or if a median or guard post are present, two adjacent gates shall be allowed, the minimum width of each adjacent gate shall not be less than 13 feet.

~~F.~~
D103.6 is amended to read as follows:

D103.6 Signs and markings. Where required by the code official, fire apparatus access roads shall be marked, at the expense of the owner, with permanent NO PARKING AT ANY TIME—FIRE LANE signs. Such signs shall be of standard size, color, lettering and mounting complying with ~~Section 7.26~~ of the Subdivision Improvement Design Standards. Placement of fire lane signage shall meet the following:

1. One sign shall be posted at each end of an official fire lane. Each sign shall have a single head arrow showing the appropriate direction of the fire lane.

2. A fire lane longer than 100 ft. shall have intermediate signs posted at even intervals. Intermediate signs shall have a double headed arrow indicating the fire lane is continuous. The intermediate signs may be posted as necessary, but in no case shall the interval between fire lane signs be greater than 100 ft.

3. The fire lane sign shall be securely fastened to a suitable pole or support with a minimum vertical clearance above the sidewalk of 7 ft.

4. When poles are used to mount fire lane signs they shall be placed 2 ft. 6 in. behind the face of the curb. In accordance with ~~20-157.3, line d~~ of the El Paso City Code, no pole or obstruction may be placed within 5 ft. of a fire hydrant.

5. Fire lane signs shall be posted parallel to the lane or curb to which they apply.

6. When the distance between the curb and a building, light standard or other structure is 8 ft. or less, the fire lane signs may be posted on the face of the building, light standard or other structure. The bottom of the sign shall be located 7 ft. above the adjacent sidewalk.

When required by the fire official, the owner shall also cause curbs or pavement to be painted red and be conspicuously and legibly marked with the warning "FIRE LANE—TOW AWAY ZONE" in white letters at least three inches tall, at intervals not exceeding 50 feet. It is unlawful for any person, without lawful authority, to remove any signs designating a fire lane. It shall be unlawful for any person to place, maintain or display any unauthorized fire lane, or use the color red for the marking of a no parking zone that purports to be, imitates or resembles official signage or marking of a fire lane.

~~G.~~
Delete Figure D103.6, Fire Lane Signs.
~~H.~~
D103.6.l is amended to read as follows:

D103.6.1 Roadways governed by Subdivision Ordinance. Signage and marking of fire apparatus access roads within subdivisions shall be as prescribed in the Subdivision Ordinance of the City of El Paso, Texas.

~~I.~~
D103.6.2 is amended to read as follows:

D103.6.2 Roads less than 28 feet in width. Fire apparatus access roads less than 28 feet wide (8.5 m) shall be posted on both sides as a fire lane.

~~J.~~
103.6.3 is added to read as follows:

D103.6.3 Roads more than 28 feet in width. Fire apparatus access roads more than 28 feet wide (8.5 m) and less than 36 feet wide (11 m) shall be posted on one side of the road as a fire lane.

~~K.~~
D103.6.4 is added to read as follows:

D103.6.4 Responsibility. The owner or his representative of a building which is adjacent to the fire lane shall be responsible for keeping the fire lane free of obstructions. It is unlawful to park any vehicle other than an authorized emergency vehicle in any fire lane. Unauthorized vehicles parked in designated fire lanes that block fire department or other emergency vehicle access may be towed to a designated storage facility by the authority of the fire official.

~~L.~~
D103.6.5 is added to read as follows:

D103.6.5. Records. The official records of the designation and location of any such fire lanes shall be kept by the fire official. The fire official may require the property owner to submit site plans for determining and recording fire lanes on the property.

~~M.~~
Figure D103.l is amended as follows:

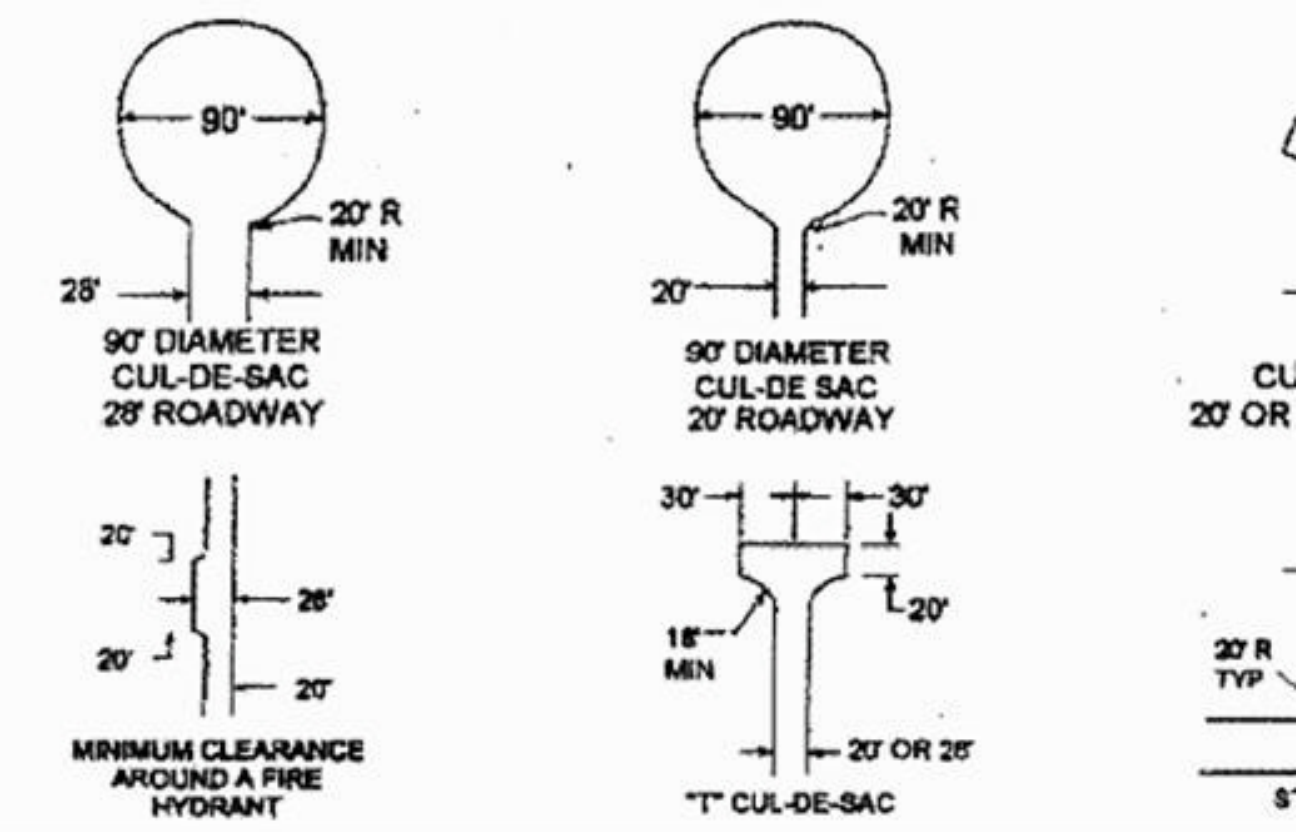

Figure D103.1

Dead-End Fire Apparatus Turnaround

~~N.~~
D107.1 is amended as follows:

D107.1 One- or two-family dwelling residential developments. Developments of one- or two-family dwellings where the number of dwelling units exceeds 130 shall be provided with separate and approved fire apparatus access roads, and shall meet the requirements of Section D104.3.

Exception:

1. The number of dwelling units on a single fire apparatus access road shall not be increased unless fire apparatus access roads will connect with future developments, as determined by the code official.

(Ord. 15964 § 1 (part), 2004)