Sidewalk Obstructions

Title 13.20

Karl Rimkus,

Ordinance and Policy Coordinator

Environmental Services Department

Goals

- Streamline enforcement process for sidewalk obstructions within a single ordinance
- Clearly define what an obstruction may be
- Clearly define which part of the sidewalk must be maintained free of obstructions
- Identify additional measures to prevent vehicle encroachment onto sidewalks

Sidewalks

Narrow sidewalk with partial parkway

Broad sidewalk with no parkway

Protected Passage Space

- Derived from Texas Dept. of Licensing and Regulation Texas Accessibility Standards (TAS) continued passage width for a single wheelchair
- 36 inches in width along sidewalk surface (TAS)
- 8 feet in height above the sidewalk surface (identical to 12.68.030 of the City Code)

Protected Passage Space

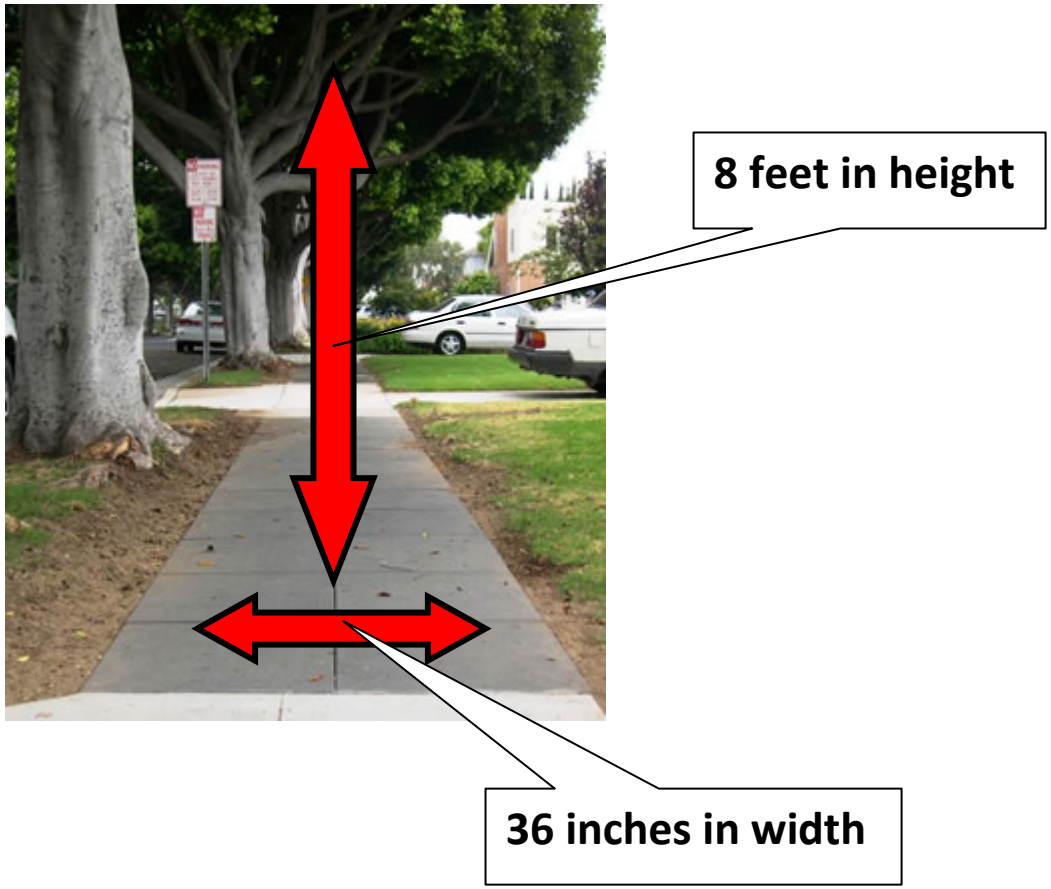

Protected Passage Space

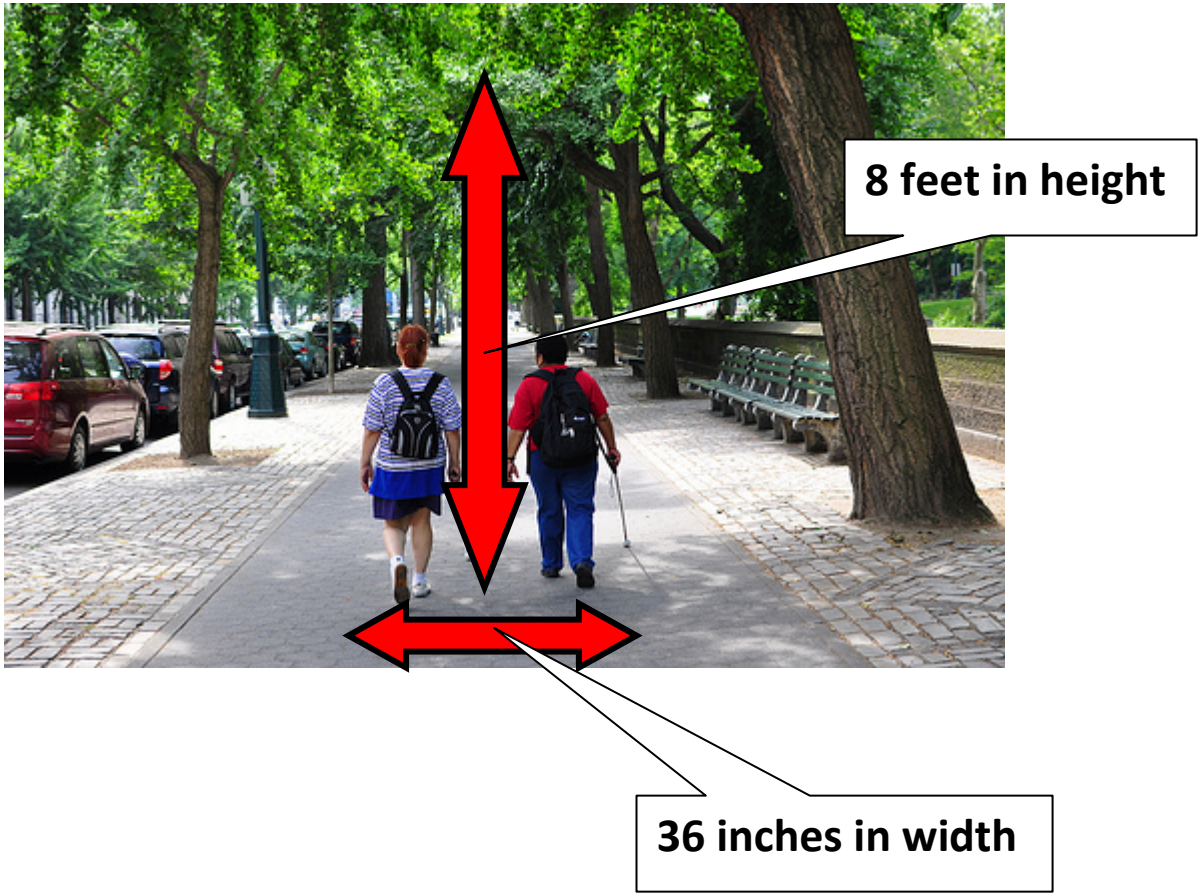

Protected Passage Space

TEXAS ACCESSIBILITY STANDARDS (TAS)

4.2 Space Allowances and Reach Ranges.

4.2.1* Wheelchair Passage Width. The **minimum clear width for single wheelchair passage** shall be 32 in (815 mm) at a point and **36 in (915 mm) continuously** (see Fig. 1 and 24(e)).

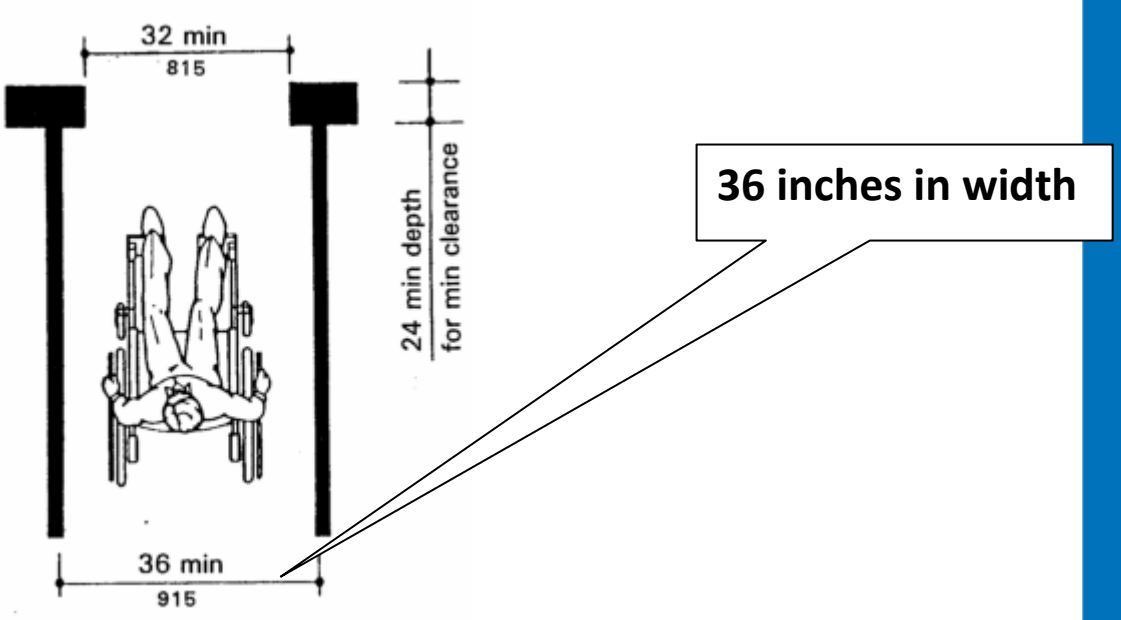

Protected Passage Space

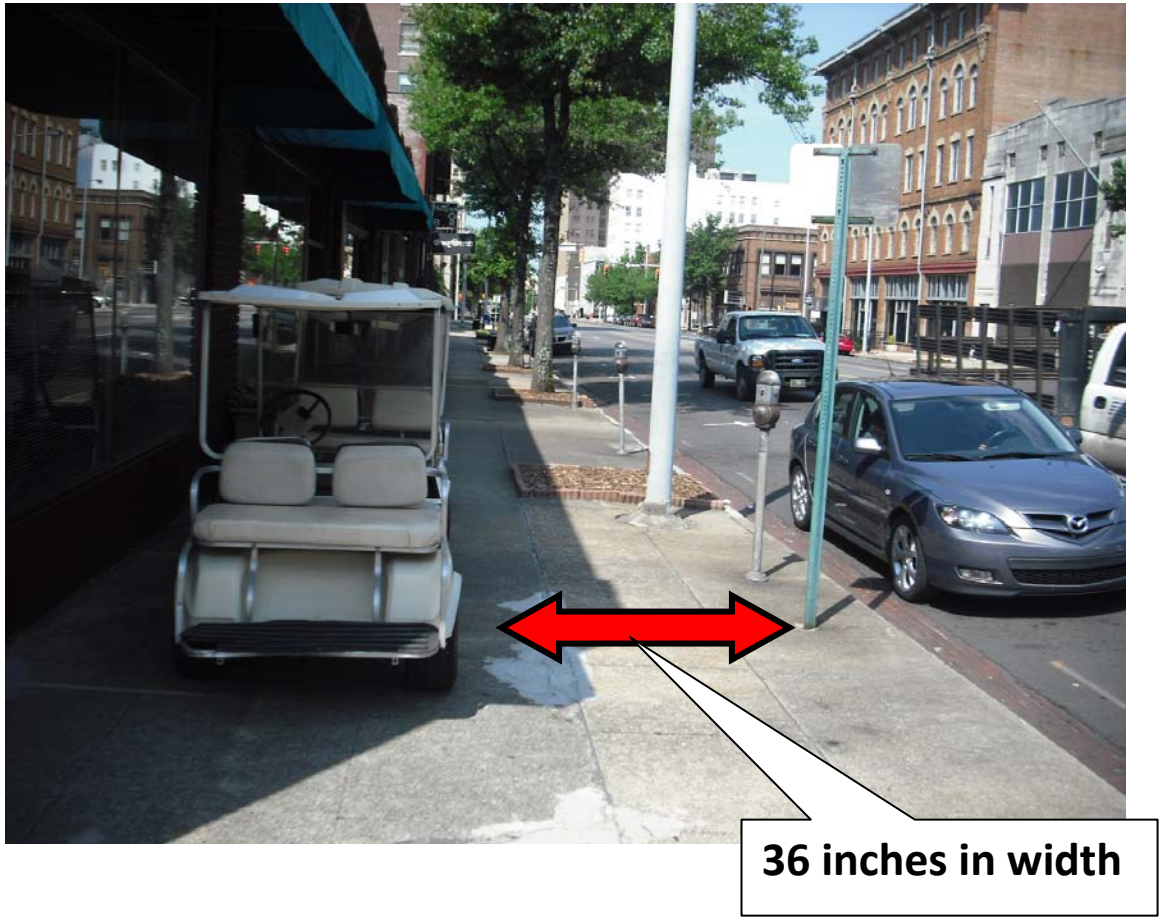

Obstruction

- May be an object, solid waste or hazardous substance
- May be temporary or intended to be permanent
- Is encroaching upon the protected passage space
- Poles placed by the authority of City Council or designees are exempt

Obstructions: Vehicles

Obstructions: Vehicles

Obstructions: Plants

Obstructions: Plants

Potential Obstructions at Parking Lots

Potential Obstructions at Parking Lots

Barriers to Encroachment

(wheel stops)

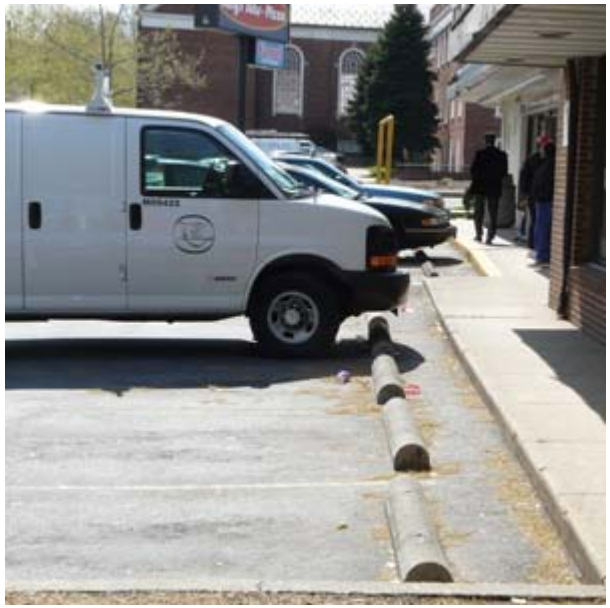

Exception: Utility pole

Exception: Light poles

Questions or Comments?