NORTHGATE TRANSFER CENTER AND PARKING GARAGE

Solicitation No. 2016-748

City of El Paso
Purchasing and Strategic Sourcing Department
300 N. Campbell, 1st Floor
El Paso, Texas

VOLUME 1 OF 3

All bids must be submitted

in a sealed envelope

BEFORE 2:00 P.M.

on the Bid Opening date to

CITY HALL

300 N. Campbell, El Paso, TX 79901

1st FLOOR

PURCHASING & STRAGETIC SOURCING DIVISION

CITY OF EL PASO
NOTICE

NORTHGATE TRANSFER CENTER AND PARKING GARAGE
Solicitation No. 2016-748

A NON-MANDATORY PRE-PROPOSAL CONFERENCE WILL BE HELD

On April 6, 2016 at 9:30 a.m.

Location: **City 2, 218 N. Campbell, Basement Meeting Room**

EVENTS	DATE AND/OR TIME
Release Bids	3/29/2016
Last Day for Offerors to Submit Written Questions	7 days prior to bid opening date
Bid Due Date	4/20/2016
Evaluations	14 days after bid opening
Contract Award Date	21 days after evaluations

Answers furnished during the conference will not be official until verified in writing by the issuing office.

You may address procurement questions to the *Analyst*, *Rachel Johnson*, in writing at *johnsonra@elpasotexas.gov*. Any other communications, oral or in writing, with any person are strictly prohibited.

Attendance at the project pre-proposal conference is optional for all bidders intending to submit a proposal.

Instructions to bidders: Free bid packets (Specifications, Plans and all required forms) are available online. Bidders must register in order to download bid packets from the Purchasing & Strategic Sourcing Department Website:

http://www.elpasotexas.gov/purchasing/ep-invitations.asp

Bidders must acknowledge the receipt of any and all amendments on the solicitation response. It is the bidder's responsibility to ensure that they have all pertinent information regarding solicitations, including all amendments prior to submitting their offer. Failure to acknowledge may be cause for your proposal to be considered non-responsive.

TABLE OF CONTENTS

COMPETITIVE SEALED PROPOSAL

NORTHGATE TRANSFER CENTER AND PARKING GARAGE

PROPOSAL NO. 2016-748

FTA FUNDED PROJECT

FTA GRANT NO. TX90003

	SECTION	NO. PAGES
VOLUME 1		
INVITATION FOR SEALED PROPOSALS	I-A-1	2
SCOPE OF WORK	I-A-a	3
INFORMATION FOR OFFERORS	I-B	33
COMPETITIVE SEALED PROPOSAL SELECTION CRITERIA	I-C	7
PROPOSAL	I-C-a	3
CERTIFICATION OF NONCOLLUSION	I-C-b	1
BID BOND	I-D	3
SUPPLEMENTAL OFFEROR INFORMATION	I-E	20
FEDERAL CERTIFICATIONS	I-F	9
FEDERAL TRANSPORTATION (FTA) CERTIFICATIONS	I-F-a	4
VOLUME 2		
APPLICABLE WAGE RATES	I-G	26
QUALIFICATION AND FINANCIAL DISCLOSURE STATEMENT	I-H	5
CONTRACT	II-A	2
PERFORMANCE BOND	II-B	2
PAYMENT BOND	II-C	2
AGENT RESIDENT DESIGNATION	II-D	1
INSURANCE REQUIREMENTS (Certificate to be inserted by contractor)	II-E	3
CERTIFICATE OF OWENER'S ATTORYNEY	II-F	1
GENERAL CONDITIONS OF CONTRACT	III-A	56
SAFETY STANDARD AND ACCIDENT PREVENTIION	III-B	1
TRENCH SAFETY SYSTEM REQUIREMENTS	III-C	4
FTA SUPPLEMENTAL CONDITIONS	III-D	24
EQUAL EMPLOYMENT OPPORTUNITY REQUIREMENTS	IV-A	6
ANTI-KICKBACK ACT	V-B	7
VOLUME 3		
TECHNICAL SPECIFICATIONS	V	

THE SUN METRO-MASS TRANSIT DEPARTMENT
OF THE CITY OF EL PASO
INVITATION FOR COMPETITIVE SEALED PROPOSALS

NORTHGATE TRANSFER CENTER AND PARKING GARAGE
PROPOSAL NO. 2016-748

Competitive Sealed Proposals will be received by the Purchasing & Strategic Sourcing Department, City of El Paso, 300 N. Campbell, El Paso, Texas 79901 or HAND DELIVERED to the Purchasing and Strategic Sourcing Department at City Hall, 300 N. Campbell, 1st Floor, El Paso, Texas, before 2:00 p.m., Wednesday, April 20, 2016, publicly opened and read in City Hall, 300 N. Campbell, 1st Floor, Council Chambers, unless posted otherwise, for furnishing the City with the construction of NORTHGATE TRANSFER CENTER AND PARKING GARAGE, Proposal No. 2016-748.

The City reserves the right to accept or reject any or all bids and to waive formalities. In case of ambiguity in stating the price in the bid, the City reserves the right to consider the most advantageous construction thereof or to reject any bids. Also, the City reserves the right to accept the low bid based on the tabulation of any one, combination or all of the base bid(s), alternate bid(s) and/or, optional bid(s) based on the most advantageous project bid that is desired by the City Department involved and that the City Council in their sole judgment determines is the City's best interest and benefit.

"PLEASE NOTE THE REQUIREMENTS IN SECTION 5.24 AND 5.25 OF THE CONTRACT GENERAL CONDITIONS, APPRENTICES THAT MAY APPLY TO THIS PROJECT."

Cone of Silence: Please note requirements of the City's "Cone of Silence" Policy found in section I-B, Information for Bidders, item number 26. The Cone of Silence Policy prohibits any communication except as provided in the Policy. The Cone of Silence begins on the day the bid is advertised and terminates on the day that a recommendation of contract award is placed on the City Council agenda by the Purchasing & Strategic Sourcing Department.

Please note the City's experience requirements, for award of this project, in Section I-B, Information for Bidders, item No. 6, Method of Award-Competitive Sealed Proposal.

Wage Rates: Where there are similar wage rate classifications in wage determinations, the higher wage shall be paid. The contractor shall pay not less than the wage rate as determined by the Department of Labor, Wage and Hour Division and the City of El Paso.

The bidder awarded the contract for this project will be required to enter payrolls electronically using the *LCP Tracker* payroll software that the City uses to certify payrolls and generate payroll reports. The City will provide Contractor with the software.
All forms in VOLUME I must be printed, completed and submitted in a sealed envelope. It is the responsibility of the bidder to submit any forms that may have been issued by amendment.

IMPORTANT NOTICE

NOTE: ANY CHANGES IN DUE DATE OR MATERIAL CHANGES FOR ANY RFP'S/SOLICITATIONS WILL BE POSTED ON THE SOLICITATIONS PAGE OF THE CITY OF EL PASO PURCHASING & STRATEGIC SOURCING DEPARTMENT'S WEBSITE:

http://www.elpasotexas.gov/purchasing/eprocurement

It is the bidder's responsibility to ensure that they have all pertinent information regarding solicitations, including all amendments prior to submitting their offer. Please check the website, even after submitting a bid, to ensure that you have all amendments as they may be posted at any time, up to and including the day of bid opening.

The City of El Paso does not provide any documents (i.e. proposal, plans, specs, etc.) in paper form (hardcopy).

The estimated project budget is in the range of $8,000,000.00 – $11,000,000.00.

Federal funds: Federal funds are anticipated to be used in this project and the rules and regulations of the Davis-Bacon Act and Executive Order 11246, State of Texas and the Federal Transportation Administration of the United States Department of Transportation apply. In the event that federal funds are not disbursed to the City of El Paso for this project, or that federal funds disbursed are insufficient to proceed with this Project, as determined by the City of El Paso, the City of El Paso shall have no further legal obligations for compensation or damages to the bidder. The City has the option to terminate this project.

All contractors
The following forms are mandatory and must be submitted prior to award:

1. Federal Certifications, Section I-F-1
2. Federal Transportation Administration (FTA) Certifications, Section I-F-a

Note: Special attention is called to the "Buy America Certificate", page 1-F-a-4.

Bid Security: Each bid must be accompanied by a bid bond naming the City of El Paso as obligee and duly executed by the Bidder as principal and having as surety thereon a surety company approved by the Owner, in the amount of five percent (5%) of the total bid price (including base bid(s), option(s) and alternate(s). ALL BID BOND FORMS MUST CONTAIN ORIGINAL SIGNATURES (S).

The successful bidder must furnish a performance and payment bond as required by law, and the terms of this contract.

Bruce D. Collins, CPPO
Purchasing Director
Purchasing & Strategic Sourcing Department
City of El Paso

Advertised in the EL PASO TIMES Tuesday, March 29, 2016 and Tuesday, April 5, 2016

NORTHGATE TRANSFER CENTER AND PARKING GARAGE
SOLICITATION No. 2016-748

SCOPE OF WORK

BASE BID I

The NORTHGATE TRANSFER CENTER is comprised of three elements: 1. Transfer Plaza; 2. The Transfer Center and 3. The Parking Garage. These three elements are closely interrelated and even-though they are distinct, their sum is what makes it one project with a similar goal, materials and quality. Their interaction as connecting components is what will make this project a success. The overall site is approximately 6.4 Acres and will have extensive concrete paving streetscape, landscape, and concrete plazas. Quality concrete formwork, placement and coloring, joining of materials and consistency of finishes is expected.

1. Transfer Plaza:

The transfer plaza is located in the northern part of the project and is comprised of 6 articulated bus berths-stops and 2 Bus Rapid Transit - BRIO stops. The access will be through Wren Ave, although restricted to pedestrians and buses only it can accommodate emergency vehicles. There will NOT be public vehicular access through Wren Ave. The bus street inside the project will be of heavy concrete and the bus traffic will be running counterclockwise. It will be thoroughly illuminated with light poles and will have a pedestrian sidewalk throughout its perimeter.

At the East and South sides of the Transfer Plaza and the 6 bus births and 2 BRIO stops, there will be benches, landscaped areas and Tensile Structures to provide pedestrian shade and shelter. These areas will also have planters and trees which will be lit, and have programmable irrigation and lighting system. Also at each bus stop there will be a light post with a sign that will inform patrons of bus routes and numbers and will have security cameras.

The bus driveway surrounds an on-site ponding area that will retain most of the developed run-off of the entire project. This pond will be an average of 3' deep and will be fully landscaped. Also at the northwest side of the property there will be three smaller on-site ponds that will retain the water run-off from the adjacent properties, KFC and Walgreens. These ponds will be over 3 feet deep and will be fenced with at rock wall on the western side of the ponds and a wrought iron on the western side of the ponds.

2. Transfer Center Building:

The Transfer center is an 8,600 S.F. single story building that includes the main plaza by the front entrance that connects to the bus drop off and pickup area. The plaza will also house a piece of ART which is currently NOT part of the scope of work but which may later replace the clock tower element shown in the drawings. The plaza will have concrete benches, landscaped areas and trees, two curve walls, and two large tensile structures. The plaza will be of concrete and will have radial patterns that will be strictly enforced as they are an important part of the overall design.

The Transfer Center Building is single story connected to the plaza area and will have an outdoor shaded terrace, interior lobby, bus driver rest area, restrooms (4), two accessed from the outside and two accessed from the inside. It will also have a community room, security office, server room, cashiers office, vending machine area and a kitchen concession area. The building will have two entrances: one from the main plaza and the other from an entrance that connects to the Parking Garage and

stair/elevator circulation component. Overall construction is steel frame on concrete footings with cement board exterior finish wall components and a membrane roof structure.

3. Parking Garage:

The parking garage will have 181 parking spaces in two levels, 1st floor and roof. The poured in place concrete structure will also have 16,000 S.F. of shell retail area that will be fronting the future Northgate Street with metal and glass storefront. This street will NOT be a part of the project scope, only the colonnade in front of the building. The Contractor will have to coordinate with the future street contractor, the location and placement of the colonnade footings and structure. It is anticipated that the street will be built concurrently with the overall project. The only portion of the street that is part of the scope is from the existing bridge that connects the site to Diana Street, and the northbound driveway that will be built up to the west end of the parking garage. This driveway will also provide emergency access to the Transfer Plaza.

The parking garage shall have access from the future Northgate St. on the southern side and with this project through the driveway on the western side. The garage will NOT be sprinklered. The garage also has two stair towers and one elevator (the east tower). The towers will not be air conditioned but will be lit and have security cameras.

The retail spaces will have a store front along the southern façade. There will not be any demising walls, only a CMU wall separating the retail areas from the parking garage. Through the parking garage, there will be access to the Transfer Center Building and it's the trash, electrical and mechanical rooms. Lighting fixtures and poles are distributed throughout the building including security cameras.

OPTION I. Tensile Structures.

Project includes several tensile structure fabric shades along the bus stops. Option I is to furnish and install the tensile structures including foundation, steel columns, tensile fabric and light fixtures that are to be hung from the structure's column. All necessary connections for lighting and power shall be included for complete and operating light, power and message system components.

OPTION 2. Aluminum Screens

The contractor under base bid shall furnish and install aluminum screens throughout the building except at the Northern and West Facades of the Parking Garage. Option 1 is to provide and install matching aluminum screens on the Northern and West Facades of the Parking Garage as per plans and specifications for base bid screens.

OPTION 3. Northgate Street Colonnade.

The Colonnade, shown on drawings and detailed in project specifications shall be located along the southern elevation of the parking garage and is to be built at the location of the Future Northgate Street sidewalk. The pricing of this option is to include the foundations, steel columns and structure, metal screens, flashing, and finishes.

OPTION 4. Clock Spier.

Per drawings and specifications provide and install with concrete foundation and structure a monument spire/spier and clock in the central area of the Transfer Center Building Plaza. This Spier is to be priced separately as an option including foundation, finishing, lighting fixtures, clock and all electrical work. Electrical conduit and wiring from the transfer center building to the Clock Spier location however shall be included in the base bid.

NOTE: Kitchen Equipment

The Transfer Center Building has a Kitchen Concession area. The contractor in the Base Bid is to coordinate and install equipment similar and equal to that shown on the drawings and in the specifications but **equipment will be provided by owner**. All mechanical, plumbing and electrical connections are to be included in the Base Bid. Again, the kitchen equipment will be owner furnished – contractor installed under the base bid.

THIS IS A COMPETITIVE SEALED PROPOSAL CONTRACT SOLICITATION WITH THE CITY OF EL PASO

ALL OPTIONS DESCRIBED HEREIN ARE OUTLINED ON DRAWING AG1000 OF THE CONSTRUCTION DOCUMENTS AND FURTHER DETAILED WITHIN PROJECT DOCUMENTS.

Prior to commencement of any work, the Contractor shall submit and obtain approval from City of El Paso, Capital Improvement Department, for the Sequence of Construction, Schedule of Work, and Haul/Waste Route to an approved disposal site. Traffic Control Plan must be submitted and approved, if applicable. Contractor shall provide written approved documentation from the owner or operator of the waste site.

The description of this scope of work as shown above is only a general overview of this project. Contractor shall refer to the project plans and specifications for further information.

END SCOPE OF WORK

INFORMATION FOR OFFERORS

COMPETITIVE SEALED PROPOSALS

1. RECEIPT AND OPENING OF PROPOSALS

The CITY OF EL PASO, hereinafter called the "Owner", invites proposals on the attached form hereto, all blanks of which must be appropriately filled in. Proposals will be received by the Owner at the office of the Purchasing & Strategic Sourcing Department, as specified in the "Invitation to Bid", page I-A-1, and then publicly opened and read aloud at City Hall, 300 N. Campbell, 1st Floor, Council Chambers unless otherwise posted. The envelopes containing the proposals must be sealed and addressed to: Purchasing & Strategic Sourcing Department, City Hall, 300 N. Campbell, 1st Floor, El Paso, Texas 79901 or delivered to the Purchasing & Strategic Sourcing Department, City Hall, 300 N. Campbell, 1st Floor, El Paso, Texas and designated as a proposal for:

NORTHGATE TRANSFER CENTER AND PARKING GARAGE

Solicitation No. 2016-748

N O T I C E

The Owner reserves the right to accept or reject any or all proposals and, to the extent permitted by law, to waive informalities or irregularities that are not material, such as failure to submit sufficient offer copies, literature or similar attachments or business affiliation information. All proposals are to be prepared and submitted in accordance with the provisions of the Information for Offerors, and the City reserves the right to consider any proposal, therefore, subject to rejection as being nonresponsive to the proposal request. The Owner may, in its sole discretion, determine that any non-material defect in the proposal is harmless if such defect relates to an element that is not material, mandatory or essential to the responsiveness of the proposal, and the Owner may accept the proposal in spite of the existence of a harmless non-material defect. Any proposal received after the time and date specified shall not be considered. No Offeror may withdraw a proposal within ninety (90) consecutive calendar days after the actual date of the opening thereof.

EXPIRATION NOTICE

The offeror agrees, to furnish all items [supplies or services] at the prices offered, and delivered at the designated point or points, within the time set forth in the SCHEDULE, if this offer is accepted within **NINETY [90]** consecutive days from the date set for the receipt of offers. All offers shall expire on the **90th** day after the offers are open unless the City of El Paso requests an extension of the offers in writing and the offeror agrees to extend in writing.

2. PREPARATION OF PROPOSALS

Proposal must be submitted in original form with five (5) additional copies and one electronic copy, all contained in a single submission. All responses must be submitted in original form with:

a. Five (5) bound original copies of your proposal

b. Electronic – one (1) electronic copy on flash drive. Format of the electronic copy must be either .doc (readable by Microsoft Word 2003 or 2007) or .pdf (readable by Adobe reader 9). The content of the electronic file shall be exact submission of the hard copies of the proposals. (i.e., documents should bear signatures, where applicable and be filled out entirely). In the event of a discrepancy/conflict between the hard copy and electronic copy, hard copy will govern.

EACH PROPOSAL MUST BE SUBMITTED ON THE PRESCRIBED FORM AND all blank spaces for prices must be entered in ink or typewritten**. FAILURE TO FILL IN ALL BLANK SPACES SHALL CAUSE THE PROPOSAL TO BE DEEMED NOT RESPONSIVE AND PROPOSAL WILL NOT BE CONSIDERED.** For unit price proposals line item entries shall prevail over sum total entries. When discrepancies exist between unit prices and corresponding extended prices, unit prices shall prevail. The predetermined percentage allowable for mobilization shall prevail over the total amount entered for mobilization. When discrepancies exist between the predetermined percentage allowable for mobilization and the total amount entered for mobilization, the predetermined percentage allowable shall prevail.

Each submission of proposals must be submitted in a sealed envelope/box bearing on the outside the name of the Offeror, his/her address, and the name of the project for which the proposals are being submitted. If forwarded by mail, the sealed envelope containing the proposals must be enclosed in another envelope addressed as specified in Paragraph 1.

When applicable, Federal Labor Certifications **must** be completed on any Federally Funded Projects and submitted prior to award.

EACH BID MUST BE ACCOMPANIED BY THE "BUY AMERICA" CERTIFICATION. FAILURE TO SUBMIT THE REQUIRED "BUY AMERICA" CERTIFICATION IN THE SEALED BID PROPOSAL WOULD BE CAUSE TO DECLARE THE BIDDER NON-RESPONSIVE.

*** N O T I C E ***
STATE SALES TAX

The successful Offeror may be required to pay state sales tax for the purchase, rental or lease of tools, machinery and equipment used in the performance of the awarded contract and for materials purchased which are not incorporated into the completed project. It is the obligation of the Offeror to ascertain the amount of state sales tax to be paid under Chapter 151 of the Texas Tax Code and to include this amount in his/her proposal submitted to the Owner. For further information, the Offeror may wish to contact the office of the Texas Comptroller of Public Accounts at 1-800-252-5555.

3. SIGNATURE FORMALITIES

THE FULL COMPANY NAME OF THE OFFEROR SHOULD BE NOTED ON EVERY PAGE OF THE PROPOSAL AND SHALL BE SIGNED WITH THE OFFEROR'S OFFICIAL SIGNATURE. The name of the signing party or parties should be typewritten or printed under all signatures on the signature page of the proposal.

The Offeror should observe the following additional formalities specific to his/her form or ownership:

a. If a corporation, a Corporate Certificate must be completed by the Secretary or by another officer if the proposal is signed by the Secretary. In lieu of the certificate, there may be attached to the proposal, copies of as much of the records of the corporation as will show the official character and authority of the officers signing, duly certified by the Secretary or Assistant Secretary under the corporate seal to be true copies.

b. If the Offeror should be operating as a partnership, each partner should sign the proposal. If the proposal is not signed by each partner, there should be attached to the proposal a duly authenticated power of attorney evidencing the signer's authority to sign such proposal for and in behalf of the partnership.

c. If the Offeror is an individual, the trade name (if the Offeror be operating under an assumed name) should be indicated in the proposal and the proposal should be signed by such individual. If signed by one other than the Offeror, there should be attached to the proposal a duly authenticated power of attorney evidencing the signer's authority to execute such proposal for and in behalf of the Offeror.

4. SUBCONTRACTS

The Offeror is specifically advised that any person, firm, or other party to whom it is proposed to award a subcontract under this contract must meet the following requirement(s) BEFORE the contract is awarded:

a) Be acceptable to the Owner after verification of the current eligibility status.
b) Submit certification by proposed subcontractors regarding Labor Practices Certification. Approval of the proposed subcontract award cannot be given by the Owner unless and until the proposed subcontractor has submitted the certifications and/or other evidence showing that it has fully complied with any reporting requirements to which it is or was subject. Although the Bidder is not required to attach such certifications by proposed subcontractors to his/her bid, the bidder is hereby advised of this requirement so that appropriate action can be taken to prevent subsequent delay in subcontract awards.

5. USE OF PURCHASING AND STRATEGIC SOURCING DEPARTMENT EQUIPMENT

Offerors are forbidden to use any telephones or equipment, i.e., desks, calculators, etc., in the Purchasing and Strategic Sourcing Department as a whole prior to bid openings.

6. METHOD OF AWARD – COMPETITIVE SEALED PROPOSAL

The Owner shall receive, publicly open, and read aloud the names of the offerors and any monetary proposals made by the offerors.

No later than the 45th day after the date on which the proposals are opened, the Owner shall evaluate and rank each proposal submitted in relation to the selection criteria set out in this request for proposal in section I-C.

The Owner shall select the offeror that submits the proposal that offers the best value for the Owner based on the selection criteria in the request for proposal and the weighted value for those criteria in the request for proposal and the owner's ranking evaluation.

The Owner shall first attempt to negotiate a contract with the selected offeror. The Owner and its architect or engineer may discuss with the selected offeror options for a scope or time modification and any price change associated with the modification.

If the Owner is unable to negotiate a satisfactory contract with the selected offeror, the Owner shall, formally and in writing, end negotiations with that offeror and proceed to the next offeror in the order of the selection ranking until a contract is reached or all proposals are rejected.

Contractor or Subcontractor performing the work shall have the required specifications.

If the Contractor can meet solicitation requirements through a subcontractor, then it must include five (5) references for the subcontractor's experience.

THE HIRE EL PASO POLICY

Said ordinance allows for award of a construction contract to a Tier 1 bidder who is within 5 points of the highest ranked proposer, if the amount of the bid is within 5% of the highest ranked proposer or to a Tier 2 bidder who is within 5 points of the highest ranked proposer, if the amount of the bid is within 2.5% of the highest ranked proposer. See Hire El Paso First Ordinance as amended August 26, 2014.

CONDITIONAL PROPOSALS WILL NOT BE ACCEPTED

The submission or attachment of company "Quotation Forms" or any other documents containing alternative terms and / or conditions is not acceptable and may result in your bid being deemed non-responsive. Unauthorized additions, serious omissions, bids that do not contain a unit price where required or irregularities of any kind which make the bid incomplete, indefinite, or otherwise ambiguous are not acceptable and may result in your bid being deemed non-responsive.

6A. MINIMUM SPECIFICATIONS: The specifications listed are to be interpreted as meaning the minimum required by the City. Offeror commits to provide goods/services that are consistent with the City's specifications in every regard unless an exception is clearly noted. The City may accept a bid subject to an exception if, in the sole judgment of the City, the bid meets or exceeds the City's specifications. If the goods/services offered do not meet or exceed the City's specifications because of the exception, the City will consider the bid non-responsive.

SAFETY AND CAPACITY INSPECTIONS: The City reserves the right to conduct safety and capacity inspections of facilities, equipment, and staff prior to the award and periodically during the contract term. If, in the sole discretion of the City, a vendor is deemed to have inadequate safety equipment and/or procedures, has a track record of safety violations, or has insufficient capacity to honor the contract requirements then the vendor may be declared non-responsible.

EQUIPMENT, PERSONNEL AND RESPONSIBILITY DETERMINATION: Upon request, the Contractor must be willing to identify and provide the following as appropriate, 1) the primary equipment it intends to use in the execution of this contract to include quantity, brand, type, and model year; 2) the number of personnel it employs that can fulfill the contract requirements and; 3) responsibility determination (financial and technical - see end of Section B for specific information).

CONTRACTING OFFICER (CO) AND CONTRACTING OFFICER'S

REPRESENTATIVE (COR)
Acceptance of services will be the responsibility of the Contracting Officer (CO), who also serves as City of Paso Purchasing Director, or designee. The Contracting Officer is responsible for final approval and acceptance of all services rendered. Upon contract execution, the Contracting Officer will delegate a Contracting Officer's Representative (COR) and Department Contracts Administrator(s) (DCAs) to assist with the administration of the resultant Contract.

CONTRACT PERFORMANCE
The Respondent shall be responsible for the completion of all work set out in the Contract and task orders. All work is subject to inspection, evaluation, and acceptance by City of El Paso. City of El Paso may employ all reasonable means to ensure that the work is progressing and being performed in compliance with the Contract.

MATERIALS AND FABRICATION: Details of construction and materials, where not otherwise specified, are left to the discretion of the manufacturer, provided that only materials and workmanship of the highest quality are to be used, and best commercial practice is adhered to in the fabrication of the unit(s). Except as otherwise specified herein, the manufacturer shall be solely responsible for design and construction of the product to meet the stated performance criteria.

REFERENCE TO BRAND NAMES: Any manufacturer names, trade names, brand names, or catalog numbers used in these specifications are for the purpose of describing and establishing minimum requirements or level of quality and design required, and are in no way intended to prohibit the bidding of other manufacturers' item of equal material and quality.

MATERIALS: The items furnished shall be new, unused or the latest model in production as offered to commercial trade and shall be of the highest quality as to materials and workmanship. Manufacturer furnishing these items shall be experienced in the design and construction of such items and shall furnish evidence of having supplied similar items which have been in successful operation. The bidder shall be an established supplier of the items bid.

7. TIME OF AWARD

Each Contract shall be deemed as having been awarded when formal written Notice of Award shall have been duly served upon the Offeror to whom the Owner has awarded the contract by some officer or agent of the Owner duly authorized to give such notice. Upon receipt of such written notice, the Contractor will proceed to verify the availability of the required materials or equipment needed to perform the project and submit his shop drawings to the Capital Improvement Department or Owner-designated representative within (21) twenty-one calendar days from issuance of Notice to Proceed with Submittal Phase. If problems are encountered in the availability of materials or equipment, the Owner will be notified in writing immediately prior to scheduling of the Preconstruction Conference.

8. BID SECURITY

Each bid must be accompanied by an <u>original</u> Bid Bond prepared in the form of a Bid Bond attached hereto, naming the City of El Paso Texas as obligee and duly executed by the Offeror as principal and, having as surety thereon a surety company approved by the Owner, in the amount of five percent (5%) of the TOTAL proposal price, including the base bid(s), option(s) and alternate(s), (cash, personal checks, company checks,

cashier's checks or any security other than a bid bond **will not be accepted**). The surety shall meet the requirements found in the General Conditions 5.13.2.2.1 and 5.13.2.4. Each Bid Bond submitted must be an original Bid Bond with original signatures of the principal and surety. The surety company providing the Bid Bond shall designate an agent resident who resides within the County of El Paso to whom any requisite notices may be delivered and with whom service of process may be rendered in matters arising out of the surety ship. Such bid bonds will be returned promptly after the Owner and the accepted Offeror have executed the Contract, or, if no award has been made, within ninety (90) consecutive calendar days after the date of the opening of proposals, upon demand of the Offeror at any time thereafter, so long as he/she has not been notified of the acceptance of his/her proposal.

9. LIQUIDATED DAMAGES FOR FAILURE TO ENTER INTO CONTRACT

In the event the successful Offeror fails or refuses to execute and deliver the Contract, insurance certificates, bonds and resident agent designation as required herein within fourteen (14) consecutive calendar days after successful Offeror has received notice of award, the Owner may take the necessary steps to terminate the award and seek forfeiture of successful Offeror's bid bond as liquidated damages for such failure or refusal to enter into a contract.

10. BONDING REQUIREMENTS

In accordance with Chapter 2253, Texas Government Code, the City of El Paso requires the following for all public works contracts:

a. A Performance Bond for all public works contracts in excess of $25,000. The performance bond shall be for one hundred percent (100%) of the contract price and conditioned on the faithful performance of work in accordance with the plans, specifications, and contract documents.

b. A Payment Bond for all public works contracts in excess of $25,000. The payment bond shall be for one hundred percent (100%) of the contract price for the protection and use of the payment bond beneficiaries who have a direct contractual relationship with the prime contractor or subcontractor to supply public work labor or material.

In accordance with Section 3503.003 of the TEXAS INSURANCE CODE, the surety company providing the Payment Bond shall designate an agent who resides within the County of El Paso to whom any required notices may be delivered and on whom process may be served in matters arising out of surety ship.

In accordance with Section 3503.004 of the TEXAS INSURANCE CODE, if a Performance or Payment Bond is an amount in excess of ten percent (10%) of the surety's capital and surplus, the City of El Paso will require, as a condition to accepting the bond(s), a written certification from the surety that the surety has reinsured the portion of the risk that exceeds ten percent (10%) of the surety's capital and surplus with one or more reinsurers who are duly authorized, accredited or trusted to do business in the State of Texas. If any portion of the surety's obligation is reinsured, the amount reinsured may not exceed 10% of the reinsurer's capital and surplus.

The required bonds shall be executed only by a surety company that is authorized to write surety bonds in Texas. If the amount of the bond exceeds $100,000, the surety

company must also: (a) hold a certificate of authority from the United States secretary of the treasury to qualify as a surety on obligations permitted or required under federal law; or (b) have obtained reinsurance for any liability in excess of $100,000 from a reinsurer that: (1) is an authorized reinsurer in this state; and (2) holds a certificate of authority from the United States secretary of the treasury to qualify as a surety or reinsurer on obligations permitted or required under federal law. To determine whether the surety on the bond or the reinsurer holds a certificate of authority from the United States secretary of the treasury, a party may conclusively rely on the list published in the Federal Register by the United States Department of the Treasury, covering the date on which the bond was executed, of the companies holding certificates of authority as acceptable sureties on federal bonds and as acceptable reinsuring companies.

Note: Dun & Bradstreet has the capability to obtain information on past performance on specific contractors. Accordingly, the City may require Offerors to provide a copy of a recent past performance report prepared by Dun & Bradstreet. The Past Performance Evaluation Report provided to the Offeror by Dun & Bradstreet shall be submitted, not later than 14 calendar days after request by the City. The Offeror shall be responsible for the cost of Dun & Bradstreet's preparation of the report.

11. TIME OF COMPLETION AND LIQUIDATED DAMAGES

Bidder agrees to commence work on a date to be specified in a written "Notice to Proceed" issued by the Owner. The Contract Time shall begin on the date to commence work specified in the Notice to Proceed and shall run for **THREE HUNDRED FIFTY (350)** additional **CONSECUTIVE CALENDAR DAYS** thereafter. Bidder shall substantially complete the project within **THREE HUNDRED FIVE (305)** CONSECUTIVE CALENDAR DAYS after the date to commence work in the Notice to Proceed. Bidder agrees to pay, as liquidated damages, the sum of **TWO HUNDRED SEVENTY-EIGHT DOLLARS AND SIXTY CENTS ($278.60)** for each consecutive calendar day after the date of Substantial Completion, as hereinafter provided in the General Conditions. Bidder further agrees to pay as liquidated damages the sum of **TWO HUNDRED EIGHTY DOLLARS AND FIFTEEN CENTS ($280.15)** for each consecutive calendar day after the expiration of the Contract Time for Remaining Work, as provided in Paragraph 6.8.3.1 of the General Conditions. The unit price quantities of this contract are estimated.

12. CONDITIONS OF WORK

Each Offeror must inform himself/herself fully of the conditions relating to the construction of the project and the employment of labor thereon. Failure to do so will not relieve a successful Offeror of his/her obligation to furnish all material and labor necessary to carry out the provisions of his/her contract. Insofar as possible, the contractor, in carrying out his/her work, must employ such methods or means as will not cause any interruption of, or interference with, the work of any other contractor.

13. OBLIGATION OF OFFEROR

A the time of the opening of proposals, each Offeror will be presumed to have inspected the site and to have read and to be thoroughly familiar with the plans and contract documents, including all addenda. The failure or omissions of any Offeror to examine any form, instrument, General Conditions, or other document shall in no way relieve any Offeror from any obligation in respect of his/her proposal.

The undersigned Offeror represents to the City and to the other Offerors that his/her proposal, and the estimates on which it is based, has been carefully checked and contains no errors, and nothing has been omitted or overlooked in determining the amount proposal.

14. ADDENDA AND INTERPRETATIONS

No interpretation of the meaning of plans, specifications, or other pre-proposal documents will be made to any Offeror orally. Every request for such interpretation should be in writing addressed to the Purchasing and Strategic Sourcing Department, City of El Paso, 300 N. Campbell, 1st Floor, El Paso, Texas 79901. To be given consideration, the request for interpretation must be received at least seven (7) consecutive calendar days prior to the date fixed for the opening of proposals. Please check the website, even after submitting a proposal to ensure that you have all amendments as they may be posted at any time, up to and including the day of bid opening. Failure of any Offeror to acknowledge any such addendum or interpretation shall not relieve such Offeror from any obligation under his/her proposal as submitted. All addenda so issued shall become part of the contract documents and must be acknowledged on the proposal form.

15. POWER OF ATTORNEY

Attorneys-in-Fact who sign bid bonds or contract bonds must file with each bond a certified and effectively dated copy of their power of attorney.

16. NOTICE OF SPECIAL CONDITIONS

Attention is particularly called to those parts of the contract documents and specifications that deal with the following:

a. Inspection and testing of materials.
b. Insurance requirements.
c. Wage rates.

17. DISADVANTAGED BUSINESS ENTERPRISE (DBE) REQUIREMENT

The offeror's attention is particularly called to the Disadvantaged Business Enterprise (DBE) Program Requirements governing this contract. Any offerror who is not a DBE must make a good faith effort to award at least **4.99%** of the dollar value of the contract to DBE's. In this regard, the offeror must complete and submit the certifications contained on page I-E-2 and pages I-F-a-1 through I-F-a-3 (FTA Certificaitons) regarding the DBE program.

18. LAWS AND REGULATIONS APPLICABLE

The Offeror's attention is directed to the fact that all applicable federal laws, including but not limited to, the Immigration Reform and Control Act of 1986, state laws, municipal ordinances and the rules and regulations of all authorities having jurisdiction over construction of the project shall apply to the contract throughout and they will be deemed to be included in the contract the same as though herein written out in full.

The successful Offeror is required to provide to the Purchasing and Strategic Sourcing Department all documents necessary to fulfill local, state and federal regulations

governing this project, prior to the preconstruction conference. A Notice to Proceed with the contract **will not** be issued until the appropriate City departments have received all submittals, and any such delays by the Contractor's failure to submit such requirements will not be counted against the time that the proposal must remain valid. Appropriate forms and technical assistance will be provided to the successful Offeror by the Purchasing and Strategic Sourcing Department and Owner Designee to fulfill these requirements. For information or assistance, call Purchasing and Strategic Sourcing Department at (915) 212-0043.

19. PREVAILING WAGE RATES AND WAGE RATE PENALTY

The Contractor and any subcontractor under him shall pay not less than the general prevailing wage rates contained herein, to all laborers, workmen and mechanics employed by them in the execution of this contract. When multiple wage rates are used (e.g. Federal wage rates and City wage rates) featuring similar job classifications, the higher wage within the relevant construction type shall be paid.

The general prevailing wage rates contained herein shall be posted at the construction work site in a prominent and accessible place where it can be easily seen by all laborers, workmen and mechanics employed on the project.

Pursuant to Chapter 2258, Texas Government Codes, the Contractor shall forfeit as a penalty to the City of El Paso sixty dollars ($60.00) for each laborer, workman or mechanic employed, for each calendar day, or portion thereof such laborer, workman or mechanic is paid less than the said stipulated rates for any work done under this contract, by him, or by any subcontractor under him.

20. APPRENTICES

The successful Offeror shall be required to comply with sections 5.24 and 5.25 of the General Conditions of the Construction Contract. The Offeror shall meet the requirements of registration for a bona fide apprenticeship program, the allowable ratio of apprentices on the job site and the apprentice wage rates and fringe benefits. The Offeror shall participate in a DOL certified apprenticeship program when the work required under the contract includes work that must be performed by apprenticeable occupations and the work involving such apprenticeable occupation has a value of **fifty thousand dollars** or more. The apprenticeable occupations are those listed in Section 5.24 of the General Conditions of the Construction Contract. Noncompliance of the contract provisions concerning the apprenticeship participation may be a basis to terminate the construction contract, which shall be referred to the City Council for determination.

21. INSURANCE AND WORKER'S COMPENSATION INSURANCE

The successful Offeror will be required to furnish certificates of insurance to the Owner that will comply with Paragraphs 5.11 and 5.12 of the General Conditions of this Contract. The Offeror's attention is directed to these insurance and workers' compensation requirements. It will be presumed that each Offeror has read these requirements and that any cost associated with these requirements has been incorporated into the proposal submitted to the Owner and the successful Offeror will have no claim for compensation against the Owner.

22. OFFEROR ACKNOWLEDGEMENT AND AGREEMENT OF CONTRACT

All Offerors, by submitting a proposal hereunder acknowledge understand and agree to the following: All terms, covenants, conditions and any other provisions of the Construction Contract, shall become a part hereof for all purposes. The Offeror formally awarded this contract, shall execute the above-referenced construction contract, and shall be bound to all provisions of this contract in the performance of the project.

23. TRAFFIC CONTROL PLANS

It shall be the duty and responsibility of the contractor to submit to the Capital Improvement Department or Owner Designee for review three (3) sets of plans for traffic control for this project within twenty one (21) days of award, in accordance with paragraph 2.6, Maintenance and Protection of Traffic of the General Conditions.

The submitted plans must be sealed by a registered professional engineer who is certified to design and implement traffic control plans.

24. PROJECT PROGRESS & PAYMENT SCHEDULES

Prior to award, Contractor shall provide Owner, in an electronic format, with project progress and payment schedules created in MS Projects, to be used for optimal project coordination. Any payment schedules will be considered estimates, and will not be contractually binding insofar as all payment applications will be processed and paid for as work is completed to the Owner's satisfaction. The Contractor shall submit updated schedules monthly throughout the course of the project; however, the Owner reserves the right to request updates at any given time.

This project will be set-up for payment through electronic funds transfer. The City will process the electronic funds transfer within five (5) days of receipt of the approved pay application from the Project's Architect and Project Manager. The vendor's banking institution may assess a processing fee for ACH and wire transfer transactions. The City reserves the right to process a manual check in the event that electronic fund processing issues arise.

NOTE: All vendors **must** accept an ACH payment effective immediately. Vendors must fill-out the attached Accounts Payable Direct Deposit Sign-Up Form located in Section I-E of this document to facilitate the Automated Clearing House (ACH) payment process.

Contract Payments
All contract payments shall be made in accordance with the Contract's invoice payment terms. The City of El Paso will make no advance payments for the goods and/or services that are subject of this solicitation, unless otherwise noted in the Form of Contract. Invoices may be submitted on no more than a monthly basis. Refer to section III-A page 51.

PROMPT PAYMENT

Unless a prompt payment discount is offered and accepted by the City of El Paso, payments will be made to the Contractor within thirty (30) days following acceptance of goods or services, or receipt of a properly prepared invoice by the City Department identified in the Invoice Instructions set forth on the Purchase Order, whichever is later. Any discount for prompt payment will be calculated from the day goods or services are accepted or when a properly prepared invoice is received. Payments will be considered to have been made on the date of mailing (postmark) of the payment check or, for an electronic funds transfer, the specified payment date. Invoices are to be submitted in

single copy to the appropriate Department.

PAYMENT TERMS: Please mark appropriate block.

_____% - 10 Days ☐
_____% - 20 Days ☐
_____% - 30 Days ☐
Net - 30 Days ☐

Late Payment fees will incur at the State of Texas statutory rate.

25. ORGANIZATION CERTIFICATE, ASSUMED NAME CERTIFICATE/DBA CERTIFICATE, AND BUSINESS AFFIDAVIT

Offeror must submit with his offer a copy of the company's organization certificate issued by the Secretary of State of the State in which the Offeror was organized. If the Offeror uses a trade name other than the name under which the company was organized, Offeror must also submit a copy of the Assumed Name Certificate. Also, a DBA certificate must be provided if the Offeror uses a trade name other than the name under which the company was organized. Further, Offeror must complete and submit the affidavit at the end of section I-E, Supplemental Bidder Information, stating what names the company uses and has used in the past and attest that all such names describe the company currently submitting a proposal.

26. CONE OF SILENCE/ANTI-LOBBYING POLICY

The City's Cone of Silence/Anti Lobbying Policy was adopted to ensure a fair and competitive bidding environment by preventing communication between City officials, employees, or representatives and parties involved in the bidding process that could create an unfair advantage to any party with respect to the award of a city contract.

The Cone of Silence period begins on the day that the request for proposal (RFP), request for qualifications (RFQ), a competitive bid, a highest qualified bid (including best value and competitive sealed proposals), design-build, public-private partnership or any other type of solicitation required by law, is advertised, or the day a source selection or the giving of a notice of a proposed project is made, and ends on the day that a recommendation of a contract award is posted by the city clerk for placement on the agenda.

For an unsolicited or competing proposal for a public-private partnership, the period in which no person or registrant shall engage in any lobbying activities with city officials and employees shall begin on the date that the City receives an unsolicited proposal and end on the date the notice of award has been posted by the city clerk for placement on the agenda.

The Cone of Silence/Anti Lobbying Policy prohibits any communication or lobbying activities during the Cone of Silence period, by any person, including but not limited to, bidders, lobbyists or consultants of bidders, service providers or potential vendors and any the following:

1. City Staff and City Consultants, including any employee of the City of El Paso, any person retained by the City of El Paso as a Consultant on the project, or any person

having participated in the development, design, or review of documents related to the project.

2. City Officials, including the Mayor, Council Representatives and their respective staff.

3. Members of the City's Selection Committee, whether City employees or outside experts appointed or selected by the City.

The Cone of Silence/Anti Lobbying Policy does not apply to:

1. Questions of Process and Procedure, including oral communications with the Purchasing Director or Procurement Analyst, provided the communications are strictly limited to matters of process or procedure already contained in the solicitation document. A minimum of ten days will be provided for questions during solicitation unless otherwise stated in the Solicitation Schedule of Events in the documents.

2. Pre-Proposal/Pre-Bid Conferences, including oral communications at pre-proposal or pre-bid conferences, oral presentations before selection committees, contract negotiations, and public presentations made to the Mayor and Council Representatives during a duly noticed public meeting.

3. Written Communications, to the Procurement Analyst identified in the solicitation.

A person who knowingly or intentionally lobbies in violation of the provisions of this policy, or who shall knowingly obstruct or prevent compliance with this policy shall be guilty of a misdemeanor.

Furthermore, any person who knowingly or intentionally violates the provisions of this policy, with respect to the solicitation or award of a discretionary contract may be prohibited by the city council from entering into any contract with the city for a period not to exceed three years.

27. NOTICE: PUBLIC DISCLOSURE OF BID INFORMATION

Offerors are cautioned that once a bid is opened, all information contained therein will be available to the **PUBLIC** unless the information is excepted from the requirements of Government Code Section 552.021 pertaining to Open Records. The exception that allows the City to protect information that, if released, would give advantage to a competitor or bidder does not apply after the bidding is complete and the contract has been awarded. *Trade secrets, commercial or financial background data and privileged or confidential information* may be excepted from public inspection. If any information contained in your offer qualifies for an exception because it falls into one of the categories above it should be clearly marked "CONFIDENTIAL" and the basis of your claim of confidentiality should be stated. Data so identified will be maintained as a protected record. Offerors who claim that information contained in a bid should be protected from public disclosure after the award of the contract may be asked to support such claim if the City receives an Open Records request for the information and requests a determination by the Attorney General. [Rev. 04-03-98]

Recommendation(s) for formal awards shall be posted on the City's website the Thursday afternoon prior to the Tuesday City Council Meeting wherein the recommendation shall be presented. Vendors are responsible for monitoring the

City's website for said postings.

28. COOPERATIVE PURCHASING

This contract may be utilized for purchases by other local government entities under an interlocal cooperation agreement, Texas Government Code Chapter 791. Any contract award by the City of El Paso on behalf of another local government entity shall be contingent upon the issuance of a purchase order or execution of a separate contract by the other local government entity. The Contractor must deal directly with the local government entity concerning the placement of orders, issuance of the purchase order, insurance certificates, contractual disputes, invoicing and payment or any other terms and conditions that the other local government entity may require. The actual utilization of this contract award by the other local government entity is at the sole discretion of that other local government entity.

The City of El Paso is acting on the behalf of other local government entities for the sole purpose of complying with Texas competitive bidding requirements and shall not be held liable for any costs, damages, etc. incurred by any bidder with regard to any purchase by another local government entity. The City of El Paso shall be legally responsible only for payment for goods and services in the quantities detailed in the City's own purchase order or contract.

NOTE 1: BIDDERS ARE REQUIRED TO SUBMIT OFFERS ON THE PRESCRIBED FORM(S) (UNALTERED). OFFERS SUBMITTED ON OTHER THAN THE PRESCRIBED FORM(S) MAY BE CONSIDERED INCOMPLETE OR NON-RESPONSIVE. FAILURE TO FURNISH REQUIRED DOCUMENTATION WITH THE BID MAY RESULT IN THE BID BEING DEEMED INCOMPLETE AND NON-RESPONSIVE, RESULTING IN REJECTION.

NOTE 2: THE CITY IS NOT RESPONSIBLE FOR LOCATING OR SECURING ANY INFORMATION THAT IS NOT IDENTIFIED IN THE OFFER AND REASONABLY AVAILABLE TO THE CITY, AND THE CITY WILL NOT BE RESPONSIBLE FOR LOCATING OR SECURING INFORMATION NOT INCLUDED WITH THE OFFER. IN CONDUCTING ITS ASSESSMENT THE CITY MAY USE DATA PROVIDED BY THE BIDDER AND DATA OBTAINED FROM OTHER SOURCES, BUT WHILE THE CITY MAY ELECT TO CONSIDER DATA OBTAINED FROM OTHER SOURCES THE BURDEN OF PROVIDING THOROUGH AND COMPLETE INFORMATION RESTS WITH THE BIDDER.

NOTE 3: THE CITY MAY ACCEPT THE LOWEST RESPONSIBLE AND RESPONSIVE BID BASED ON THE TABULATION OF ANY ONE, COMBINATION OR ALL OF THE BASE BID(S), ALTERNATE BID(S), AND/OR OPTIONAL BID(S) BASED ON THE MOST ADVANTAGEOUS PROJECT BID THAT IS DESIRED BY THE CITY DEPARTMENT INVOLVED AND THAT THE CITY COUNCIL IN THEIR SOLE JUDGMENT DETERMINES IS IN THE CITY'S BEST INTEREST AND BENEFIT.

NOTE 4: AT ANY TIME DURING THE TERM OF THE CONTRACT THE PURCHASING DIRECTOR OR DESIGNATED PERSONNEL MAY INCREASE OR DECREASE THE SCOPE OF SUPPLIES AND OR SERVICES AS HE MAY FIND NECESSARY TO ACCOMPLISH THE GENERAL PURPOSE OF THE CONTRACT.

NOTE 5: ALL GOODS AND SERVICES DELIVERED SHALL COMPLY WITH THE SPECIFICATIONS SET FORTH IN SECTION B. DESCRIPTIVE LITERATURE

CONTAINING SUFFICIENT INFORMATION TO DETERMINE PRODUCT COMPLIANCE WITH SPECIFICATIONS MUST ACCOMPANY BID. THE CITY OF EL PASO RESERVES THE RIGHT TO REQUEST SAMPLES FROM BIDDER(S) PRIOR TO AWARD OF CONTRACT.

NOTE 6: IN ADDITION TO ANY OTHER DISCOUNT, THE CITY IS ENTITLED TO A DEDUCTION FOR FEDERAL EXCISE TAX IF IT IS INCLUDED ON THE MANUFACTURER'S PUBLISHED PRICE LIST FOR APPLICABLE ITEMS, AND CONTRACTOR MUST INVOICE ACCORDINGLY. A FEDERAL TAX EXEMPTION CERTIFICATION WILL BE PROVIDED BY THE CITY, UPON REQUEST.

NOTE 7: BIDDER MUST SUBMIT WITH HIS OFFER A COPY OF THE COMPANY'S ORGANIZATION CERTIFICATE ISSUED BY THE SECRETARY OF STATE OF THE STATE IN WHICH THE BIDDER/PROPOSER WAS ORGANIZED. ALSO, A DBA CERTIFICATE MUST BE PROVIDED IF THE BIDDER/PROPOSER USED A TRADE NAME IN THE SOLICITATION DOCUMENTS OTHER THAN THE NAME UNDER WHICH THE COMPANY WAS ORGANIZED. FURTHER, THE BIDDER/PROPOSER MUST FILL OUT THE AFFIDAVIT IN SECTION D STATING WHAT NAMES THE COMPANY USES AND HAS USED IN THE PAST AND ATTEST THAT ALL SUCH NAMES DESCRIBE THE COMPANY CURRENTLY SUBMITTING A BID OR PROPOSAL.

NOTE 8: ACCURACY OF ESTIMATED QUANTITIES – THE CITY BELIEVES THAT THE NUMBERS USED AS ITEM QUANTITIES TO BE A REASONABLY ACCURATE ESTIMATE; HOWEVER, THE ACTUAL QUANTITY MAY BE MORE OR LESS THAN THE ESTIMATE, AND SHALL NOT BE THE BASIS FOR ANY CHANGE IN THE CONTRACT PER UNIT PRICE. ADDITIONALLY, ESTIMATES ARE MINIMUMS, BUT NOT GUARANTEED MINIMUMS, AND THE CONTRACT COST CAN INCREASE SO LONG AS THE UNIT COSTS REMAIN THE SAME AND INCREASED FUNDS ARE APPROPRIATED IN THE BUDGET.

NOTE 9: ANY MANUFACTURER NAMES, TRADE NAMES, BRAND NAMES, OR CATALOG NUMBERS USED IN THESE SPECIFICATIONS ARE FOR THE PURPOSE OF DESCRIBING AND ESTABLISHING MINIMUM REQUIREMENTS OR LEVEL OF QUALITY AND DESIGN REQUIRED. THEY ARE IN NO WAY INTENDED TO PROHIBIT THE BIDDING OF OTHER MANUFACTURERS' ITEMS OF EQUAL MATERIAL AND QUALITY OR MEANT TO EXCLUDE ANY OTHER MAKE AND MODEL FROM BEING CONSIDERED. VENDORS WHO WISH TO BID A FUNCTIONALLY EQUIVALENT ITEM(S) WHICH MEETS OR EXCEEDS THE SPECIFICATIONS MUST FURNISH WITH THE BID DESCRIPTIVE LITERATURE CONTAINING SUFFICIENT INFORMATION TO DETERMINE PRODUCT COMPLIANCE.

NOTE 10: ALL OFFERS ARE SUBJECT TO THE TERMS AND CONDITIONS OF THIS SOLICITATION. MATERIAL EXCEPTIONS TO THE TERMS AND CONDITIONS, OR FAILURE TO MEET THE CITY'S MINIMUM SPECIFICATIONS, SHALL RENDER THE OFFER NON-RESPONSIVE TO THE SOLICITATION.

NOTE 11: REFER TO METHOD OF AWARD SECTION I-C-A

NOTE 12: PROMPT PAYMENT DISCOUNTS WILL BE CONSIDERED WHEN DETERMINING THE APPARENT LOWEST BIDDER, PROVIDING THE CITY IS ALLOWED AT LEAST TEN (10) DAYS IN WHICH TO TAKE ADVANTAGE OF THE DISCOUNT.

<u>NOTE 13</u>:AS PART OF THE REQUIREMENT TO ESTABLISH THE RESPONSIBILITY OF THE OFFEROR, THE CITY OF EL PASO MAY PERFORM A PRICE ANALYSIS TO DETERMINE THE REASONABLENESS OF THE PRICE(S) AT WHICH THE SUPPLIES AND/OR SERVICES ARE OFFERED. PRICES THAT ARE SIGNIFICANTLY LOWER THAN THE MEAN OF ALL OFFERS AND THAT APPEAR TO BE UNREASONABLY LOW MAY BE DETERMINED TO BE EVIDENCE OF NON-RESPONSIBILITY, AND CAUSE THE OFFER TO BE REJECTED.

29. WAGE THEFT

The City of El Paso Code – Chapter 346

346.010 Definition

1. ***Wage Theft Adjudication*** occurs when:

1. Employer is criminally convicted as an employer pursuant to Section 61.019 of the Texas Labor Code for failure to pay wages; or

2. Injunctive relief is granted in district court under Section 61.020 of the Texas Labor Code against the employer for repeated failures to pay wages as required by Chapter 61 of the Texas Labor Code; or

3. A wage payment determination order becomes final under Section 61.055 or Section 61.060 of the Texas Labor Code; or

4. The Texas Workforce Commission assesses an administrative penalty under Section 61.053 of the Texas Labor Code against the employer for acting in bad faith in not paying wages as required by Chapter 61 of the Texas Labor Code; or

5. Employer is convicted for Theft of Service under Section 31.04 of the Texas Penal Code; or

6. Court of competent jurisdiction finds that an employer engaged in wage theft.

2. ***Employee*** and ***employer*** have the meanings by Texas Labor Code, Section 61.001.

3. ***Wages*** means compensation owed by an employer for labor or services rendered by an employee, whether computed on a time, task piece, commission or other basis.

4. ***Wage Enforcement Coordinator*** shall mean the person designated by the City Manager to receive and investigate claims of wage theft and to create, maintain a Wage Theft database.

5. ***Wage Theft Complaint*** means a written complaint filed with the Wage Theft

Coordinator alleging any instance of wage theft by an employer.

Section 3.46.020 WAGE THEFT COORDINATOR

A. Appointment. The City Manager shall designate a Wage Theft Coordinator to perform the duties identified in this Section.

B. Duties. The Wage Theft Coordinator shall:

1. Wage Theft Adjudication Database- the Wage Theft Coordinator shall create and maintain a database of employers located or operating within the City of El Paso who have a Wage Theft Adjudication record. The Wage Theft Database will be created on a "complaint basis" and populated with information provided by third parties. The Wage Theft Coordinator shall be under no obligation to investigate wage theft or to prosecute complaints.

2. Substantiate whether a proposed party to a City Contract has a Wage Theft Adjudication record or part of the Wage Theft Adjudication Database.

3. Receive, review, and process wage theft complaint according to the process established in Section 3.46.040.

4. Coordinate with the Purchasing Director to ensure that the notice of the City's Wage Theft ordinance is included in all the City's bid documents.

5. Provide and present an annual report to City Council regarding the number of employers in the Wage Theft Adjudication Database and an update on the status of the enforcement of the City's Wage Theft ordinance.

Section 3.46.030 WAGE THEFT ADJUDICATION DATABASE

A. Inclusion in Database. No employer shall be included in the database until the

Wage Theft Coordinator has:

1. Confirmed that an employer has a Wage Theft Adjudication record;

2. Provided written notice at the address provided by the complainant, or on the documents evidencing the wage theft adjudication of the inclusion of the employer in the Wage Theft Adjudication Database.

3. Allowed the employer thirty (30) days from the date of the notice to protest the employer's inclusion in such database and provide the Wage Theft Coordinator evidence that the employer should not be included in the Wage Theft Adjudication Database. In the case of a wage theft judgment, the Wage Theft Coordinator shall not include the employer in the Database upon proof of full payment of outstanding wage theft adjudication judgment.

B. Identity of Employer. An employer operating as a business entity shall be listed

by its corporate name, address and type of business organization. If the employer is an individual, the person's name, business address, type of business or occupation shall be included.

C. Removal from Database. An employer shall be removed from the database if:

1. A Wage Theft Adjudication has been annulled, withdrawn, overturned, rescinded or abrogated, and such fact has been confirmed by the Wage Theft Coordinator; or

2. Employer provides proof of full payment of an outstanding wage theft adjudication judgment; or

3. Five (5) years or more has elapsed since the date of the employer's most recent Wage Theft Adjudication.

Section 3.46.040 WAGE THEFT COMPLAINTS PROCEDURE

A. Non- City Contracts. If no City contract is involved, the Wage Theft Coordinator shall assist persons with wage theft complaints by referring the complaint to the Texas Workforce Commission.

B. City Contracts.

1. **Filing a Complaint.** A person employed in connection with a city contract who has a good faith belief that he is the victim of wage theft may file a wage theft complaint with the Wage Theft Coordinator in writing. The complaint shall contain fact including but not limited to: identity of the employer, date(s) on or during which the wages were earned and were due to be paid, the amount of the wages alleged to have been withheld or unpaid.

2. **Notification and Resolution of the Complaint.** The Wage Theft Coordinator shall notify the employer of the receipt of the wage theft complaint. Employer shall attempt to resolve the alleged issue with the affected employee by written agreement within thirty (30) days from the receipt of the City notification. Employer shall notify the Wage Theft Coordinator if the issue was resolved between the Employer and the affected employee.

3. **Texas Workforce Commission.**

a) If no resolution is achieved, the complainant shall be referred to the Texas Workforce Commission ("Commission").

b) The Wage Theft Coordinator shall seek to determine status of the complaint at the commission. The Wage Theft Coordinator shall place Employer in the Wage Theft Adjudication Database if it appears that the Commission has made a finding that wage theft occurred.

Section 3.46.050 RETALIATION PROHIBITED

a. No City Contractor shall retaliate against any person who has filed a wage theft complaint pursuant to this Chapter. Retaliation means action to discharge from employment, discipline, or otherwise punish an employee for filing a wage theft complaint in good faith.

b. If the Wage Theft Coordinator determines that retaliation has occurred, the Wage Theft Coordinator shall refer the matter to the City Attorney for appropriate action.

Section 3.46.060. SANCTIONS AND PENALTIES- CITY CONTRACTS

A. **Existing City Agreement.**

1. In the event the City becomes aware of the fact an Employer acting under a contract which was awarded prior to the effective date of this Ordinance has been adjudicated for wage theft, the City may terminate the contract.

2. Prior to terminating the contract the City will provide Employer with thirty (30) days' notice and opportunity to provide full proof of payment of outstanding wage theft adjudication judgment.

3. The award of future City contracts after termination of an existing contract due to an Employer's wage theft adjudication shall be managed as a New City Agreement in this section.

B. **New City Agreement.**

1. In the event the City becomes aware an Employer with a wage theft adjudication record has submitted a bid or proposal for City work prior to the award of a contract, the City shall deem the Employer non-responsible and refuse to enter into a City Agreement with such Employer for a period of five (5) years after the date of final adjudication.

2. Prior to deeming the Employer as non-responsible, the City will provide the Employer with thirty (30) days' notice and opportunity to provide full proof of payment of outstanding wage theft adjudication judgment.

TITLE VI REQUIREMENT

Title VI Contract Provisions

Subrecipients of federal financial assistance must ensure that the clauses of Appendix A of the U.S. DOT Standard Title VI Assurances are inserted in every contract subject to the Act and the Regulations and that Form FHWA-1273 be physically attached to all federal-aid construction contracts of $10,000 or more.

NOTE TO CONTRACTORS:

FORM 1273 and **Appendix A** (attached) must be inserted in all subcontractor contracts.

The successful bidder will be required to provide a copy of each of its subcontractors (all tiers) to verify that the above mentioned provisions are included.

APPENDIX A

During the performance of this contract, the contractor, for itself, its assignees and successors in interest (hereinafter referred to as the "contractor") agrees as follows:

(1) **Compliance with Regulations**: The contractor shall comply with the Regulations relative to nondiscrimination in Federally-assisted programs of the Department of Transportation (hereinafter, "DOT") Title 49, Code of Federal Regulations, Part 21, as they may be amended from time to time, (hereinafter referred to as the Regulations), which are herein incorporated by reference and made a part of this contract.

(2) **Nondiscrimination**: The Contractor, with regard to the work performed by it during the contract, shall not discriminate on the grounds of race, color, or national origin in the selection and retention of subcontractors, including procurements of materials and leases of equipment. The contractor shall not participate either directly or indirectly in the discrimination prohibited by section 21.5 of the Regulations, including employment practices when the contract covers a program set forth in Appendix B of the Regulations.

(3) **Solicitations for Subcontractors, Including Procurements of Materials and Equipment**: In all solicitations either by competitive bidding or negotiation made by the contractor for work to be performed under a subcontract, including procurements of materials or leases of equipment, each potential subcontractor or supplier shall be notified by the contractor of the contractor's obligations under this contract and the Regulations relative to nondiscrimination on the grounds of race, color, or national origin.

(4) **Information and Reports**: The contractor shall provide all information and reports required by the Regulations or directives issued pursuant thereto, and shall permit access to its books, records, accounts other sources of information, and its facilities as may be determined by the *City of El Paso* to be pertinent to ascertain compliance with such Regulations, orders and instructions. Where any information required of a contractor is in the exclusive possession of another who fails or refuses to furnish this information the contractor shall so certify to the City of El Paso, as appropriate, and shall set forth what efforts it has made to obtain the information.

(5) **Sanctions for Noncompliance**: In the event of the contractor's noncompliance with the nondiscrimination provisions of this contract, the City of El Paso shall impose such contract sanctions as it may determine to be appropriate, including but not limited to:

   a. Withholding of payments to the contractor under the contract until the contractor complies, and / or
   b. Cancellation, termination or suspension of the contract in whole or in part.

(6) **Incorporation of Provisions:** The contractor shall include the provisions of paragraphs (1) through (6) in every subcontract, including procurements of materials and leases of equipment, unless exempt by the Regulations, or directive issued pursuant thereto. The contractor shall take such action with respect to any subcontract or procurement as the City of El Paso may direct as a means of enforcing such provisions including sanctions for non-compliance: Provided, however, that in the event a contractor becomes involved in, or is threatened with litigation with a subcontractor or supplier as a result of such direction, the contractor may request the City of El Paso to enter into such litigation to protect the interests of the City of El Paso, and in addition, the contractor may request the United States to enter into such litigation to protect the interests of the United States.

REQUIRED CONTRACT PROVISIONS
FEDERAL-AID CONSTRUCTION CONTRACTS

I. General
II. Nondiscrimination
III. Nonsegregated Facilities
IV. Davis-Bacon and Related Act Provisions
V. Contract Work Hours and Safety Standards Act Provisions
VI. Subletting or Assigning the Contract
VII. Safety: Accident Prevention
VIII. False Statements Concerning Highway Projects
IX. Implementation of Clean Air Act and Federal Water Pollution Control Act
X. Compliance with Governmentwide Suspension and Debarment Requirements
XI. Certification Regarding Use of Contract Funds for Lobbying

ATTACHMENTS

A. Employment and Materials Preference for Appalachian Development Highway System or Appalachian Local Access Road Contracts (included in Appalachian contracts only)

I. GENERAL

1. Form FHWA-1273 must be physically incorporated in each construction contract funded under Title 23 (excluding emergency contracts solely intended for debris removal). The contractor (or subcontractor) must insert this form in each subcontract and further require its inclusion in all lower tier subcontracts (excluding purchase orders, rental agreements and other agreements for supplies or services).

The applicable requirements of Form FHWA-1273 are incorporated by reference for work done under any purchase order, rental agreement or agreement for other services. The prime contractor shall be responsible for compliance by any subcontractor, lower-tier subcontractor or service provider.

Form FHWA-1273 must be included in all Federal-aid design-build contracts, in all subcontracts and in lower tier subcontracts (excluding subcontracts for design services, purchase orders, rental agreements and other agreements for supplies or services). The design-builder shall be responsible for compliance by any subcontractor, lower-tier subcontractor or service provider.

Contracting agencies may reference Form FHWA-1273 in bid proposal or request for proposal documents, however, the Form FHWA-1273 must be physically incorporated (not referenced) in all contracts, subcontracts and lower-tier subcontracts (excluding purchase orders, rental agreements and other agreements for supplies or services related to a construction contract).

2. Subject to the applicability criteria noted in the following sections, these contract provisions shall apply to all work performed on the contract by the contractor's own organization and with the assistance of workers under the contractor's immediate superintendence and to all work performed on the contract by piecework, station work, or by subcontract.

3. A breach of any of the stipulations contained in these Required Contract Provisions may be sufficient grounds for withholding of progress payments, withholding of final payment, termination of the contract, suspension / debarment or any other action determined to be appropriate by the contracting agency and FHWA.

4. Selection of Labor: During the performance of this contract, the contractor shall not use convict labor for any purpose within the limits of a construction project on a Federal-aid highway unless it is labor performed by convicts who are on parole, supervised release, or probation. The term Federal-aid highway does not include roadways functionally classified as local roads or rural minor collectors.

II. NONDISCRIMINATION

The provisions of this section related to 23 CFR Part 230 are applicable to all Federal-aid construction contracts and to all related construction subcontracts of $10,000 or more. The provisions of 23 CFR Part 230 are not applicable to material supply, engineering, or architectural service contracts.

In addition, the contractor and all subcontractors must comply with the following policies: Executive Order 11246, 41 CFR 60, 29 CFR 1625-1627, Title 23 USC Section 140, the Rehabilitation Act of 1973, as amended (29 USC 794), Title VI of the Civil Rights Act of 1964, as amended, and related regulations including 49 CFR Parts 21, 26 and 27; and 23 CFR Parts 200, 230, and 633.

The contractor and all subcontractors must comply with: the requirements of the Equal Opportunity Clause in 41 CFR 60-1.4(b) and, for all construction contracts exceeding $10,000, the Standard Federal Equal Employment Opportunity Construction Contract Specifications in 41 CFR 60-4.3.

Note: The U.S. Department of Labor has exclusive authority to determine compliance with Executive Order 11246 and the policies of the Secretary of Labor including 41 CFR 60, and 29 CFR 1625-1627. The contracting agency and the FHWA have the authority and the responsibility to ensure compliance with Title 23 USC Section 140, the Rehabilitation Act of 1973, as amended (29 USC 794), and Title VI of the Civil Rights Act of 1964, as amended, and related regulations including 49 CFR Parts 21, 26 and 27; and 23 CFR Parts 200, 230, and 633.

The following provision is adopted from 23 CFR 230, Appendix A, with appropriate revisions to conform to the U.S. Department of Labor (US DOL) and FHWA requirements.

1. Equal Employment Opportunity: Equal employment opportunity (EEO) requirements not to discriminate and to take affirmative action to assure equal opportunity as set forth under laws, executive orders, rules, regulations (28 CFR 35, 29 CFR 1630, 29 CFR 1625-1627, 41 CFR 60 and 49 CFR 27) and orders of the Secretary of Labor as modified by the provisions prescribed herein, and imposed pursuant to 23 U.S.C. 140 shall constitute the EEO and specific affirmative action standards for the contractor's project activities under

this contract. The provisions of the Americans with Disabilities Act of 1990 (42 U.S.C. 12101 et seq.) set forth under 28 CFR 35 and 29 CFR 1630 are incorporated by reference in this contract. In the execution of this contract, the contractor agrees to comply with the following minimum specific requirement activities of EEO:

a. The contractor will work with the contracting agency and the Federal Government to ensure that it has made every good faith effort to provide equal opportunity with respect to all of its terms and conditions of employment and in their review of activities under the contract.

b. The contractor will accept as its operating policy the following statement:

"It is the policy of this Company to assure that applicants are employed, and that employees are treated during employment, without regard to their race, religion, sex, color, national origin, age or disability. Such action shall include: employment, upgrading, demotion, or transfer; recruitment or recruitment advertising; layoff or termination; rates of pay or other forms of compensation; and selection for training, including apprenticeship, pre-apprenticeship, and/or on-the-job training."

2. EEO Officer: The contractor will designate and make known to the contracting officers an EEO Officer who will have the responsibility for and must be capable of effectively administering and promoting an active EEO program and who must be assigned adequate authority and responsibility to do so.

3. Dissemination of Policy: All members of the contractor's staff who are authorized to hire, supervise, promote, and discharge employees, or who recommend such action, or who are substantially involved in such action, will be made fully cognizant of, and will implement, the contractor's EEO policy and contractual responsibilities to provide EEO in each grade and classification of employment. To ensure that the above agreement will be met, the following actions will be taken as a minimum:

a. Periodic meetings of supervisory and personnel office employees will be conducted before the start of work and then not less often than once every six months, at which time the contractor's EEO policy and its implementation will be reviewed and explained. The meetings will be conducted by the EEO Officer.

b. All new supervisory or personnel office employees will be given a thorough indoctrination by the EEO Officer, covering all major aspects of the contractor's EEO obligations within thirty days following their reporting for duty with the contractor.

c. All personnel who are engaged in direct recruitment for the project will be instructed by the EEO Officer in the contractor's procedures for locating and hiring minorities and women.

d. Notices and posters setting forth the contractor's EEO policy will be placed in areas readily accessible to employees, applicants for employment and potential employees.

e. The contractor's EEO policy and the procedures to implement such policy will be brought to the attention of employees by means of meetings, employee handbooks, or other appropriate means.

4. Recruitment: When advertising for employees, the contractor will include in all advertisements for employees the notation: "An Equal Opportunity Employer." All such advertisements will be placed in publications having a large circulation among minorities and women in the area from which the project work force would normally be derived.

a. The contractor will, unless precluded by a valid bargaining agreement, conduct systematic and direct recruitment through public and private employee referral sources likely to yield qualified minorities and women. To meet this requirement, the contractor will identify sources of potential minority group employees, and establish with such identified sources procedures whereby minority and women applicants may be referred to the contractor for employment consideration.

b. In the event the contractor has a valid bargaining agreement providing for exclusive hiring hall referrals, the contractor is expected to observe the provisions of that agreement to the extent that the system meets the contractor's compliance with EEO contract provisions. Where implementation of such an agreement has the effect of discriminating against minorities or women, or obligates the contractor to do the same, such implementation violates Federal nondiscrimination provisions.

c. The contractor will encourage its present employees to refer minorities and women as applicants for employment. Information and procedures with regard to referring such applicants will be discussed with employees.

5. Personnel Actions: Wages, working conditions, and employee benefits shall be established and administered, and personnel actions of every type, including hiring, upgrading, promotion, transfer, demotion, layoff, and termination, shall be taken without regard to race, color, religion, sex, national origin, age or disability. The following procedures shall be followed:

a. The contractor will conduct periodic inspections of project sites to insure that working conditions and employee facilities do not indicate discriminatory treatment of project site personnel.

b. The contractor will periodically evaluate the spread of wages paid within each classification to determine any evidence of discriminatory wage practices.

c. The contractor will periodically review selected personnel actions in depth to determine whether there is evidence of discrimination. Where evidence is found, the contractor will promptly take corrective action. If the review indicates that the discrimination may extend beyond the actions reviewed, such corrective action shall include all affected persons.

d. The contractor will promptly investigate all complaints of alleged discrimination made to the contractor in connection with its obligations under this contract, will attempt to resolve such complaints, and will take appropriate corrective action within a reasonable time. If the investigation indicates that the discrimination may affect persons other than the complainant, such corrective action shall include such other persons. Upon completion of each investigation, the contractor will inform every complainant of all of their avenues of appeal.

6. Training and Promotion:

a. The contractor will assist in locating, qualifying, and increasing the skills of minorities and women who are

applicants for employment or current employees. Such efforts should be aimed at developing full journey level status employees in the type of trade or job classification involved.

b. Consistent with the contractor's work force requirements and as permissible under Federal and State regulations, the contractor shall make full use of training programs, i.e., apprenticeship, and on-the-job training programs for the geographical area of contract performance. In the event a special provision for training is provided under this contract, this subparagraph will be superseded as indicated in the special provision. The contracting agency may reserve training positions for persons who receive welfare assistance in accordance with 23 U.S.C. 140(a).

c. The contractor will advise employees and applicants for employment of available training programs and entrance requirements for each.

d. The contractor will periodically review the training and promotion potential of employees who are minorities and women and will encourage eligible employees to apply for such training and promotion.

7. Unions: If the contractor relies in whole or in part upon unions as a source of employees, the contractor will use good faith efforts to obtain the cooperation of such unions to increase opportunities for minorities and women. Actions by the contractor, either directly or through a contractor's association acting as agent, will include the procedures set forth below:

a. The contractor will use good faith efforts to develop, in cooperation with the unions, joint training programs aimed toward qualifying more minorities and women for membership in the unions and increasing the skills of minorities and women so that they may qualify for higher paying employment.

b. The contractor will use good faith efforts to incorporate an EEO clause into each union agreement to the end that such union will be contractually bound to refer applicants without regard to their race, color, religion, sex, national origin, age or disability.

c. The contractor is to obtain information as to the referral practices and policies of the labor union except that to the extent such information is within the exclusive possession of the labor union and such labor union refuses to furnish such information to the contractor, the contractor shall so certify to the contracting agency and shall set forth what efforts have been made to obtain such information.

d. In the event the union is unable to provide the contractor with a reasonable flow of referrals within the time limit set forth in the collective bargaining agreement, the contractor will, through independent recruitment efforts, fill the employment vacancies without regard to race, color, religion, sex, national origin, age or disability; making full efforts to obtain qualified and/or qualifiable minorities and women. The failure of a union to provide sufficient referrals (even though it is obligated to provide exclusive referrals under the terms of a collective bargaining agreement) does not relieve the contractor from the requirements of this paragraph. In the event the union referral practice prevents the contractor from meeting the obligations pursuant to Executive Order 11246, as amended, and these special provisions, such contractor shall immediately notify the contracting agency.

8. Reasonable Accommodation for Applicants / Employees with Disabilities: The contractor must be familiar with the requirements for and comply with the Americans with Disabilities Act and all rules and regulations established there under. Employers must provide reasonable accommodation in all employment activities unless to do so would cause an undue hardship.

9. Selection of Subcontractors, Procurement of Materials and Leasing of Equipment: The contractor shall not discriminate on the grounds of race, color, religion, sex, national origin, age or disability in the selection and retention of subcontractors, including procurement of materials and leases of equipment. The contractor shall take all necessary and reasonable steps to ensure nondiscrimination in the administration of this contract.

a. The contractor shall notify all potential subcontractors and suppliers and lessors of their EEO obligations under this contract.

b. The contractor will use good faith efforts to ensure subcontractor compliance with their EEO obligations.

10. Assurance Required by 49 CFR 26.13(b):

a. The requirements of 49 CFR Part 26 and the State DOT's U.S. DOT-approved DBE program are incorporated by reference.

b. The contractor or subcontractor shall not discriminate on the basis of race, color, national origin, or sex in the performance of this contract. The contractor shall carry out applicable requirements of 49 CFR Part 26 in the award and administration of DOT-assisted contracts. Failure by the contractor to carry out these requirements is a material breach of this contract, which may result in the termination of this contract or such other remedy as the contracting agency deems appropriate.

11. Records and Reports: The contractor shall keep such records as necessary to document compliance with the EEO requirements. Such records shall be retained for a period of three years following the date of the final payment to the contractor for all contract work and shall be available at reasonable times and places for inspection by authorized representatives of the contracting agency and the FHWA.

a. The records kept by the contractor shall document the following:

(1) The number and work hours of minority and non-minority group members and women employed in each work classification on the project;

(2) The progress and efforts being made in cooperation with unions, when applicable, to increase employment opportunities for minorities and women; and

(3) The progress and efforts being made in locating, hiring, training, qualifying, and upgrading minorities and women;

b. The contractors and subcontractors will submit an annual report to the contracting agency each July for the duration of the project, indicating the number of minority, women, and non-minority group employees currently engaged in each work classification required by the contract work. This information is to be reported on Form FHWA-1391. The staffing data should represent the project work force on board in all or any part of the last payroll period preceding the end of July. If on-the-job training is being required by special provision, the contractor

will be required to collect and report training data. The employment data should reflect the work force on board during all or any part of the last payroll period preceding the end of July.

III. NONSEGREGATED FACILITIES

This provision is applicable to all Federal-aid construction contracts and to all related construction subcontracts of $10,000 or more.

The contractor must ensure that facilities provided for employees are provided in such a manner that segregation on the basis of race, color, religion, sex, or national origin cannot result. The contractor may neither require such segregated use by written or oral policies nor tolerate such use by employee custom. The contractor's obligation extends further to ensure that its employees are not assigned to perform their services at any location, under the contractor's control, where the facilities are segregated. The term "facilities" includes waiting rooms, work areas, restaurants and other eating areas, time clocks, restrooms, washrooms, locker rooms, and other storage or dressing areas, parking lots, drinking fountains, recreation or entertainment areas, transportation, and housing provided for employees. The contractor shall provide separate or single-user restrooms and necessary dressing or sleeping areas to assure privacy between sexes.

IV. DAVIS-BACON AND RELATED ACT PROVISIONS

This section is applicable to all Federal-aid construction projects exceeding $2,000 and to all related subcontracts and lower-tier subcontracts (regardless of subcontract size). The requirements apply to all projects located within the right-of-way of a roadway that is functionally classified as Federal-aid highway. This excludes roadways functionally classified as local roads or rural minor collectors, which are exempt. Contracting agencies may elect to apply these requirements to other projects.

The following provisions are from the U.S. Department of Labor regulations in 29 CFR 5.5 “Contract provisions and related matters” with minor revisions to conform to the FHWA-1273 format and FHWA program requirements.

1. Minimum wages

a. All laborers and mechanics employed or working upon the site of the work, will be paid unconditionally and not less often than once a week, and without subsequent deduction or rebate on any account (except such payroll deductions as are permitted by regulations issued by the Secretary of Labor under the Copeland Act (29 CFR part 3)), the full amount of wages and bona fide fringe benefits (or cash equivalents thereof) due at time of payment computed at rates not less than those contained in the wage determination of the Secretary of Labor which is attached hereto and made a part hereof, regardless of any contractual relationship which may be alleged to exist between the contractor and such laborers and mechanics.

Contributions made or costs reasonably anticipated for bona fide fringe benefits under section 1(b)(2) of the Davis-Bacon Act on behalf of laborers or mechanics are considered wages paid to such laborers or mechanics, subject to the provisions of paragraph 1.d. of this section; also, regular contributions made or costs incurred for more than a weekly period (but not less often than quarterly) under plans, funds, or programs which cover the particular weekly period, are deemed to be constructively made or incurred during such weekly period. Such laborers and mechanics shall be paid the appropriate wage rate and fringe benefits on the wage determination for the classification of work actually performed, without regard to skill, except as provided in 29 CFR 5.5(a)(4). Laborers or mechanics performing work in more than one classification may be compensated at the rate specified for each classification for the time actually worked therein: Provided, That the employer's payroll records accurately set forth the time spent in each classification in which work is performed. The wage determination (including any additional classification and wage rates conformed under paragraph 1.b. of this section) and the Davis-Bacon poster (WH–1321) shall be posted at all times by the contractor and its subcontractors at the site of the work in a prominent and accessible place where it can be easily seen by the workers.

b.(1) The contracting officer shall require that any class of laborers or mechanics, including helpers, which is not listed in the wage determination and which is to be employed under the contract shall be classified in conformance with the wage determination. The contracting officer shall approve an additional classification and wage rate and fringe benefits therefore only when the following criteria have been met:

(i) The work to be performed by the classification requested is not performed by a classification in the wage determination; and

(ii) The classification is utilized in the area by the construction industry; and

(iii) The proposed wage rate, including any bona fide fringe benefits, bears a reasonable relationship to the wage rates contained in the wage determination.

(2) If the contractor and the laborers and mechanics to be employed in the classification (if known), or their representatives, and the contracting officer agree on the classification and wage rate (including the amount designated for fringe benefits where appropriate), a report of the action taken shall be sent by the contracting officer to the Administrator of the Wage and Hour Division, Employment Standards Administration, U.S. Department of Labor, Washington, DC 20210. The Administrator, or an authorized representative, will approve, modify, or disapprove every additional classification action within 30 days of receipt and so advise the contracting officer or will notify the contracting officer within the 30-day period that additional time is necessary.

(3) In the event the contractor, the laborers or mechanics to be employed in the classification or their representatives, and the contracting officer do not agree on the proposed classification and wage rate (including the amount designated for fringe benefits, where appropriate), the contracting officer shall refer the questions, including the views of all interested parties and the recommendation of the contracting officer, to the Wage and Hour Administrator for determination. The Wage and Hour Administrator, or an authorized representative, will issue a determination within 30 days of receipt and so advise the contracting officer or

will notify the contracting officer within the 30-day period that additional time is necessary.

(4) The wage rate (including fringe benefits where appropriate) determined pursuant to paragraphs 1.b.(2) or 1.b.(3) of this section, shall be paid to all workers performing work in the classification under this contract from the first day on which work is performed in the classification.

c. Whenever the minimum wage rate prescribed in the contract for a class of laborers or mechanics includes a fringe benefit which is not expressed as an hourly rate, the contractor shall either pay the benefit as stated in the wage determination or shall pay another bona fide fringe benefit or an hourly cash equivalent thereof.

d. If the contractor does not make payments to a trustee or other third person, the contractor may consider as part of the wages of any laborer or mechanic the amount of any costs reasonably anticipated in providing bona fide fringe benefits under a plan or program, Provided, That the Secretary of Labor has found, upon the written request of the contractor, that the applicable standards of the Davis-Bacon Act have been met. The Secretary of Labor may require the contractor to set aside in a separate account assets for the meeting of obligations under the plan or program.

2. Withholding

The contracting agency shall upon its own action or upon written request of an authorized representative of the Department of Labor, withhold or cause to be withheld from the contractor under this contract, or any other Federal contract with the same prime contractor, or any other federally-assisted contract subject to Davis-Bacon prevailing wage requirements, which is held by the same prime contractor, so much of the accrued payments or advances as may be considered necessary to pay laborers and mechanics, including apprentices, trainees, and helpers, employed by the contractor or any subcontractor the full amount of wages required by the contract. In the event of failure to pay any laborer or mechanic, including any apprentice, trainee, or helper, employed or working on the site of the work, all or part of the wages required by the contract, the contracting agency may, after written notice to the contractor, take such action as may be necessary to cause the suspension of any further payment, advance, or guarantee of funds until such violations have ceased.

3. Payrolls and basic records

a. Payrolls and basic records relating thereto shall be maintained by the contractor during the course of the work and preserved for a period of three years thereafter for all laborers and mechanics working at the site of the work. Such records shall contain the name, address, and social security number of each such worker, his or her correct classification, hourly rates of wages paid (including rates of contributions or costs anticipated for bona fide fringe benefits or cash equivalents thereof of the types described in section 1(b)(2)(B) of the Davis-Bacon Act), daily and weekly number of hours worked, deductions made and actual wages paid. Whenever the Secretary of Labor has found under 29 CFR 5.5(a)(1)(iv) that the wages of any laborer or mechanic include the amount of any costs reasonably anticipated in providing benefits under a plan or program described in section 1(b)(2)(B) of the Davis-Bacon Act, the contractor shall maintain records which show that the commitment to provide such benefits is enforceable, that the plan or program is financially responsible, and that the plan or program has been communicated in writing to the laborers or mechanics affected, and records which show the costs anticipated or the actual cost incurred in providing such benefits. Contractors employing apprentices or trainees under approved programs shall maintain written evidence of the registration of apprenticeship programs and certification of trainee programs, the registration of the apprentices and trainees, and the ratios and wage rates prescribed in the applicable programs.

b.(1) The contractor shall submit weekly for each week in which any contract work is performed a copy of all payrolls to the contracting agency. The payrolls submitted shall set out accurately and completely all of the information required to be maintained under 29 CFR 5.5(a)(3)(i), except that full social security numbers and home addresses shall not be included on weekly transmittals. Instead the payrolls shall only need to include an individually identifying number for each employee (e.g. , the last four digits of the employee's social security number). The required weekly payroll information may be submitted in any form desired. Optional Form WH–347 is available for this purpose from the Wage and Hour Division Web site at http://www.dol.gov/esa/whd/forms/wh347instr.htm or its successor site. The prime contractor is responsible for the submission of copies of payrolls by all subcontractors. Contractors and subcontractors shall maintain the full social security number and current address of each covered worker, and shall provide them upon request to the contracting agency for transmission to the State DOT, the FHWA or the Wage and Hour Division of the Department of Labor for purposes of an investigation or audit of compliance with prevailing wage requirements. It is not a violation of this section for a prime contractor to require a subcontractor to provide addresses and social security numbers to the prime contractor for its own records, without weekly submission to the contracting agency..

(2) Each payroll submitted shall be accompanied by a "Statement of Compliance," signed by the contractor or subcontractor or his or her agent who pays or supervises the payment of the persons employed under the contract and shall certify the following:

(i) That the payroll for the payroll period contains the information required to be provided under §5.5 (a)(3)(ii) of Regulations, 29 CFR part 5, the appropriate information is being maintained under §5.5 (a)(3)(i) of Regulations, 29 CFR part 5, and that such information is correct and complete;

(ii) That each laborer or mechanic (including each helper, apprentice, and trainee) employed on the contract during the payroll period has been paid the full weekly wages earned, without rebate, either directly or indirectly, and that no deductions have been made either directly or indirectly from the full wages earned, other than permissible deductions as set forth in Regulations, 29 CFR part 3;

(iii) That each laborer or mechanic has been paid not less than the applicable wage rates and fringe benefits or cash equivalents for the classification of work performed, as specified in the applicable wage determination incorporated into the contract.

(3) The weekly submission of a properly executed certification set forth on the reverse side of Optional Form WH–347 shall satisfy the requirement for submission of the "Statement of Compliance" required by paragraph 3.b.(2) of this section.

(4) The falsification of any of the above certifications may subject the contractor or subcontractor to civil or criminal prosecution under section 1001 of title 18 and section 231 of title 31 of the United States Code.

c. The contractor or subcontractor shall make the records required under paragraph 3.a. of this section available for inspection, copying, or transcription by authorized representatives of the contracting agency, the State DOT, the FHWA, or the Department of Labor, and shall permit such representatives to interview employees during working hours on the job. If the contractor or subcontractor fails to submit the required records or to make them available, the FHWA may, after written notice to the contractor, the contracting agency or the State DOT, take such action as may be necessary to cause the suspension of any further payment, advance, or guarantee of funds. Furthermore, failure to submit the required records upon request or to make such records available may be grounds for debarment action pursuant to 29 CFR 5.12.

4. Apprentices and trainees

a. Apprentices (programs of the USDOL).

Apprentices will be permitted to work at less than the predetermined rate for the work they performed when they are employed pursuant to and individually registered in a bona fide apprenticeship program registered with the U.S. Department of Labor, Employment and Training Administration, Office of Apprenticeship Training, Employer and Labor Services, or with a State Apprenticeship Agency recognized by the Office, or if a person is employed in his or her first 90 days of probationary employment as an apprentice in such an apprenticeship program, who is not individually registered in the program, but who has been certified by the Office of Apprenticeship Training, Employer and Labor Services or a State Apprenticeship Agency (where appropriate) to be eligible for probationary employment as an apprentice.

The allowable ratio of apprentices to journeymen on the job site in any craft classification shall not be greater than the ratio permitted to the contractor as to the entire work force under the registered program. Any worker listed on a payroll at an apprentice wage rate, who is not registered or otherwise employed as stated above, shall be paid not less than the applicable wage rate on the wage determination for the classification of work actually performed. In addition, any apprentice performing work on the job site in excess of the ratio permitted under the registered program shall be paid not less than the applicable wage rate on the wage determination for the work actually performed. Where a contractor is performing construction on a project in a locality other than that in which its program is registered, the ratios and wage rates (expressed in percentages of the journeyman's hourly rate) specified in the contractor's or subcontractor's registered program shall be observed.

Every apprentice must be paid at not less than the rate specified in the registered program for the apprentice's level of progress, expressed as a percentage of the journeymen hourly rate specified in the applicable wage determination. Apprentices shall be paid fringe benefits in accordance with the provisions of the apprenticeship program. If the apprenticeship program does not specify fringe benefits, apprentices must be paid the full amount of fringe benefits listed on the wage determination for the applicable classification. If the Administrator determines that a different practice prevails for the applicable apprentice classification, fringes shall be paid in accordance with that determination.

In the event the Office of Apprenticeship Training, Employer and Labor Services, or a State Apprenticeship Agency recognized by the Office, withdraws approval of an apprenticeship program, the contractor will no longer be permitted to utilize apprentices at less than the applicable predetermined rate for the work performed until an acceptable program is approved.

b. Trainees (programs of the USDOL).

Except as provided in 29 CFR 5.16, trainees will not be permitted to work at less than the predetermined rate for the work performed unless they are employed pursuant to and individually registered in a program which has received prior approval, evidenced by formal certification by the U.S. Department of Labor, Employment and Training Administration.

The ratio of trainees to journeymen on the job site shall not be greater than permitted under the plan approved by the Employment and Training Administration.

Every trainee must be paid at not less than the rate specified in the approved program for the trainee's level of progress, expressed as a percentage of the journeyman hourly rate specified in the applicable wage determination. Trainees shall be paid fringe benefits in accordance with the provisions of the trainee program. If the trainee program does not mention fringe benefits, trainees shall be paid the full amount of fringe benefits listed on the wage determination unless the Administrator of the Wage and Hour Division determines that there is an apprenticeship program associated with the corresponding journeyman wage rate on the wage determination which provides for less than full fringe benefits for apprentices. Any employee listed on the payroll at a trainee rate who is not registered and participating in a training plan approved by the Employment and Training Administration shall be paid not less than the applicable wage rate on the wage determination for the classification of work actually performed. In addition, any trainee performing work on the job site in excess of the ratio permitted under the registered program shall be paid not less than the applicable wage rate on the wage determination for the work actually performed.

In the event the Employment and Training Administration withdraws approval of a training program, the contractor will no longer be permitted to utilize trainees at less than the applicable predetermined rate for the work performed until an acceptable program is approved.

c. Equal employment opportunity. The utilization of apprentices, trainees and journeymen under this part shall be in conformity with the equal employment opportunity requirements of Executive Order 11246, as amended, and 29 CFR part 30.

d. Apprentices and Trainees (programs of the U.S. DOT).

Apprentices and trainees working under apprenticeship and skill training programs which have been certified by the Secretary of Transportation as promoting EEO in connection with Federal-aid highway construction programs are not subject to the requirements of paragraph 4 of this Section IV. The straight time hourly wage rates for apprentices and trainees under such programs will be established by the particular programs. The ratio of apprentices and trainees to journeymen shall not be greater than permitted by the terms of the particular program.

5. Compliance with Copeland Act requirements. The contractor shall comply with the requirements of 29 CFR part 3, which are incorporated by reference in this contract.

6. Subcontracts. The contractor or subcontractor shall insert Form FHWA-1273 in any subcontracts and also require the subcontractors to include Form FHWA-1273 in any lower tier subcontracts. The prime contractor shall be responsible for the compliance by any subcontractor or lower tier subcontractor with all the contract clauses in 29 CFR 5.5.

7. Contract termination: debarment. A breach of the contract clauses in 29 CFR 5.5 may be grounds for termination of the contract, and for debarment as a contractor and a subcontractor as provided in 29 CFR 5.12.

8. Compliance with Davis-Bacon and Related Act requirements. All rulings and interpretations of the Davis-Bacon and Related Acts contained in 29 CFR parts 1, 3, and 5 are herein incorporated by reference in this contract.

9. Disputes concerning labor standards. Disputes arising out of the labor standards provisions of this contract shall not be subject to the general disputes clause of this contract. Such disputes shall be resolved in accordance with the procedures of the Department of Labor set forth in 29 CFR parts 5, 6, and 7. Disputes within the meaning of this clause include disputes between the contractor (or any of its subcontractors) and the contracting agency, the U.S. Department of Labor, or the employees or their representatives.

10. Certification of eligibility.

a. By entering into this contract, the contractor certifies that neither it (nor he or she) nor any person or firm who has an interest in the contractor's firm is a person or firm ineligible to be awarded Government contracts by virtue of section 3(a) of the Davis-Bacon Act or 29 CFR 5.12(a)(1).

b. No part of this contract shall be subcontracted to any person or firm ineligible for award of a Government contract by virtue of section 3(a) of the Davis-Bacon Act or 29 CFR 5.12(a)(1).

c. The penalty for making false statements is prescribed in the U.S. Criminal Code, 18 U.S.C. 1001.

V. CONTRACT WORK HOURS AND SAFETY STANDARDS ACT

The following clauses apply to any Federal-aid construction contract in an amount in excess of $100,000 and subject to the overtime provisions of the Contract Work Hours and Safety Standards Act. These clauses shall be inserted in addition to the clauses required by 29 CFR 5.5(a) or 29 CFR 4.6. As used in this paragraph, the terms laborers and mechanics include watchmen and guards.

1. Overtime requirements. No contractor or subcontractor contracting for any part of the contract work which may require or involve the employment of laborers or mechanics shall require or permit any such laborer or mechanic in any workweek in which he or she is employed on such work to work in excess of forty hours in such workweek unless such laborer or mechanic receives compensation at a rate not less than one and one-half times the basic rate of pay for all hours worked in excess of forty hours in such workweek.

2. Violation; liability for unpaid wages; liquidated damages. In the event of any violation of the clause set forth in paragraph (1.) of this section, the contractor and any subcontractor responsible therefor shall be liable for the unpaid wages. In addition, such contractor and subcontractor shall be liable to the United States (in the case of work done under contract for the District of Columbia or a territory, to such District or to such territory), for liquidated damages. Such liquidated damages shall be computed with respect to each individual laborer or mechanic, including watchmen and guards, employed in violation of the clause set forth in paragraph (1.) of this section, in the sum of $10 for each calendar day on which such individual was required or permitted to work in excess of the standard workweek of forty hours without payment of the overtime wages required by the clause set forth in paragraph (1.) of this section.

3. Withholding for unpaid wages and liquidated damages. The FHWA or the contacting agency shall upon its own action or upon written request of an authorized representative of the Department of Labor withhold or cause to be withheld, from any moneys payable on account of work performed by the contractor or subcontractor under any such contract or any other Federal contract with the same prime contractor, or any other federally-assisted contract subject to the Contract Work Hours and Safety Standards Act, which is held by the same prime contractor, such sums as may be determined to be necessary to satisfy any liabilities of such contractor or subcontractor for unpaid wages and liquidated damages as provided in the clause set forth in paragraph (2.) of this section.

4. Subcontracts. The contractor or subcontractor shall insert in any subcontracts the clauses set forth in paragraph (1.) through (4.) of this section and also a clause requiring the subcontractors to include these clauses in any lower tier subcontracts. The prime contractor shall be responsible for compliance by any subcontractor or lower tier subcontractor with the clauses set forth in paragraphs (1.) through (4.) of this section.

VI. SUBLETTING OR ASSIGNING THE CONTRACT

This provision is applicable to all Federal-aid construction contracts on the National Highway System.

1. The contractor shall perform with its own organization contract work amounting to not less than 30 percent (or a greater percentage if specified elsewhere in the contract) of the total original contract price, excluding any specialty items designated by the contracting agency. Specialty items may be performed by subcontract and the amount of any such specialty items performed may be deducted from the total original contract price before computing the amount of work required to be performed by the contractor's own organization (23 CFR 635.116).

a. The term “perform work with its own organization” refers to workers employed or leased by the prime contractor, and equipment owned or rented by the prime contractor, with or without operators. Such term does not include employees or equipment of a subcontractor or lower tier subcontractor, agents of the prime contractor, or any other assignees. The term may include payments for the costs of hiring leased employees from an employee leasing firm meeting all relevant Federal and State regulatory requirements. Leased employees may only be included in this term if the prime contractor meets all of the following conditions:

(1) the prime contractor maintains control over the supervision of the day-to-day activities of the leased employees;
(2) the prime contractor remains responsible for the quality of the work of the leased employees;
(3) the prime contractor retains all power to accept or exclude individual employees from work on the project; and
(4) the prime contractor remains ultimately responsible for the payment of predetermined minimum wages, the submission of payrolls, statements of compliance and all other Federal regulatory requirements.

b. "Specialty Items" shall be construed to be limited to work that requires highly specialized knowledge, abilities, or equipment not ordinarily available in the type of contracting organizations qualified and expected to bid or propose on the contract as a whole and in general are to be limited to minor components of the overall contract.

2. The contract amount upon which the requirements set forth in paragraph (1) of Section VI is computed includes the cost of material and manufactured products which are to be purchased or produced by the contractor under the contract provisions.

3. The contractor shall furnish (a) a competent superintendent or supervisor who is employed by the firm, has full authority to direct performance of the work in accordance with the contract requirements, and is in charge of all construction operations (regardless of who performs the work) and (b) such other of its own organizational resources (supervision, management, and engineering services) as the contracting officer determines is necessary to assure the performance of the contract.

4. No portion of the contract shall be sublet, assigned or otherwise disposed of except with the written consent of the contracting officer, or authorized representative, and such consent when given shall not be construed to relieve the contractor of any responsibility for the fulfillment of the contract. Written consent will be given only after the contracting agency has assured that each subcontract is evidenced in writing and that it contains all pertinent provisions and requirements of the prime contract.

5. The 30% self-performance requirement of paragraph (1) is not applicable to design-build contracts; however, contracting agencies may establish their own self-performance requirements.

VII. SAFETY: ACCIDENT PREVENTION

This provision is applicable to all Federal-aid construction contracts and to all related subcontracts.

1. In the performance of this contract the contractor shall comply with all applicable Federal, State, and local laws governing safety, health, and sanitation (23 CFR 635). The contractor shall provide all safeguards, safety devices and protective equipment and take any other needed actions as it determines, or as the contracting officer may determine, to be reasonably necessary to protect the life and health of employees on the job and the safety of the public and to protect property in connection with the performance of the work covered by the contract.

2. It is a condition of this contract, and shall be made a condition of each subcontract, which the contractor enters into pursuant to this contract, that the contractor and any subcontractor shall not permit any employee, in performance of the contract, to work in surroundings or under conditions which are unsanitary, hazardous or dangerous to his/her health or safety, as determined under construction safety and health standards (29 CFR 1926) promulgated by the Secretary of Labor, in accordance with Section 107 of the Contract Work Hours and Safety Standards Act (40 U.S.C. 3704).

3. Pursuant to 29 CFR 1926.3, it is a condition of this contract that the Secretary of Labor or authorized representative thereof, shall have right of entry to any site of contract performance to inspect or investigate the matter of compliance with the construction safety and health standards and to carry out the duties of the Secretary under Section 107 of the Contract Work Hours and Safety Standards Act (40 U.S.C.3704).

VIII. FALSE STATEMENTS CONCERNING HIGHWAY PROJECTS

This provision is applicable to all Federal-aid construction contracts and to all related subcontracts.

In order to assure high quality and durable construction in conformity with approved plans and specifications and a high degree of reliability on statements and representations made by engineers, contractors, suppliers, and workers on Federal-aid highway projects, it is essential that all persons concerned with the project perform their functions as carefully, thoroughly, and honestly as possible. Willful falsification, distortion, or misrepresentation with respect to any facts related to the project is a violation of Federal law. To prevent any misunderstanding regarding the seriousness of these and similar acts, Form FHWA-1022 shall be posted on each Federal-aid highway project (23 CFR 635) in one or more places where it is readily available to all persons concerned with the project:

18 U.S.C. 1020 reads as follows:

"Whoever, being an officer, agent, or employee of the United States, or of any State or Territory, or whoever, whether a person, association, firm, or corporation, knowingly makes any false statement, false representation, or false report as to the character, quality, quantity, or cost of the material used or to be used, or the quantity or quality of the work performed or to be performed, or the cost thereof in connection with the submission of plans, maps, specifications, contracts, or costs of construction on any highway or related project submitted for approval to the Secretary of Transportation; or

Whoever knowingly makes any false statement, false representation, false report or false claim with respect to the character, quality, quantity, or cost of any work performed or to be performed, or materials furnished or to be furnished, in connection with the construction of any highway or related project approved by the Secretary of Transportation; or

Whoever knowingly makes any false statement or false representation as to material fact in any statement, certificate, or report submitted pursuant to provisions of the Federal-aid Roads Act approved July 1, 1916, (39 Stat. 355), as amended and supplemented;

Shall be fined under this title or imprisoned not more than 5 years or both."

IX. IMPLEMENTATION OF CLEAN AIR ACT AND FEDERAL WATER POLLUTION CONTROL ACT

This provision is applicable to all Federal-aid construction contracts and to all related subcontracts.

By submission of this bid/proposal or the execution of this contract, or subcontract, as appropriate, the bidder, proposer, Federal-aid construction contractor, or subcontractor, as appropriate, will be deemed to have stipulated as follows:

1. That any person who is or will be utilized in the performance of this contract is not prohibited from receiving an award due to a violation of Section 508 of the Clean Water Act or Section 306 of the Clean Air Act.
2. That the contractor agrees to include or cause to be included the requirements of paragraph (1) of this Section X in every subcontract, and further agrees to take such action as the contracting agency may direct as a means of enforcing such requirements.

X. CERTIFICATION REGARDING DEBARMENT, SUSPENSION, INELIGIBILITY AND VOLUNTARY EXCLUSION

This provision is applicable to all Federal-aid construction contracts, design-build contracts, subcontracts, lower-tier subcontracts, purchase orders, lease agreements, consultant contracts or any other covered transaction requiring FHWA approval or that is estimated to cost $25,000 or more – as defined in 2 CFR Parts 180 and 1200.

1**. Instructions for Certification – First Tier Participants:**

a. By signing and submitting this proposal, the prospective first tier participant is providing the certification set out below.

b. The inability of a person to provide the certification set out below will not necessarily result in denial of participation in this covered transaction. The prospective first tier participant shall submit an explanation of why it cannot provide the certification set out below. The certification or explanation will be considered in connection with the department or agency's determination whether to enter into this transaction. However, failure of the prospective first tier participant to furnish a certification or an explanation shall disqualify such a person from participation in this transaction.

c. The certification in this clause is a material representation of fact upon which reliance was placed when the contracting agency determined to enter into this transaction. If it is later determined that the prospective participant knowingly rendered an erroneous certification, in addition to other remedies available to the Federal Government, the contracting agency may terminate this transaction for cause of default.

d. The prospective first tier participant shall provide immediate written notice to the contracting agency to whom this proposal is submitted if any time the prospective first tier participant learns that its certification was erroneous when submitted or has become erroneous by reason of changed circumstances.

e. The terms "covered transaction," "debarred," "suspended," "ineligible," "participant," "person," "principal," and "voluntarily excluded," as used in this clause, are defined in 2 CFR Parts 180 and 1200. "First Tier Covered Transactions" refers to any covered transaction between a grantee or subgrantee of Federal funds and a participant (such as the prime or general contract). "Lower Tier Covered Transactions" refers to any covered transaction under a First Tier Covered Transaction (such as subcontracts). "First Tier Participant" refers to the participant who has entered into a covered transaction with a grantee or subgrantee of Federal funds (such as the prime or general contractor). "Lower Tier Participant" refers any participant who has entered into a covered transaction with a First Tier Participant or other Lower Tier Participants (such as subcontractors and suppliers).

f. The prospective first tier participant agrees by submitting this proposal that, should the proposed covered transaction be entered into, it shall not knowingly enter into any lower tier covered transaction with a person who is debarred, suspended, declared ineligible, or voluntarily excluded from participation in this covered transaction, unless authorized by the department or agency entering into this transaction.

g. The prospective first tier participant further agrees by submitting this proposal that it will include the clause titled "Certification Regarding Debarment, Suspension, Ineligibility and Voluntary Exclusion-Lower Tier Covered Transactions," provided by the department or contracting agency, entering into this covered transaction, without modification, in all lower tier covered transactions and in all solicitations for lower tier covered transactions exceeding the $25,000 threshold.

h. A participant in a covered transaction may rely upon a certification of a prospective participant in a lower tier covered transaction that is not debarred, suspended, ineligible, or voluntarily excluded from the covered transaction, unless it knows that the certification is erroneous. A participant is responsible for ensuring that its principals are not suspended, debarred, or otherwise ineligible to participate in covered transactions. To verify the eligibility of its principals, as well as the eligibility of any lower tier prospective participants, each participant may, but is not required to, check the Excluded Parties List System website (https://www.epls.gov/), which is compiled by the General Services Administration.

i. Nothing contained in the foregoing shall be construed to require the establishment of a system of records in order to render in good faith the certification required by this clause. The knowledge and information of the prospective participant is not required to exceed that which is normally possessed by a prudent person in the ordinary course of business dealings.

j. Except for transactions authorized under paragraph (f) of these instructions, if a participant in a covered transaction knowingly enters into a lower tier covered transaction with a person who is suspended, debarred, ineligible, or voluntarily excluded from participation in this transaction, in addition to other remedies available to the Federal Government, the department or agency may terminate this transaction for cause or default.

* * * * *

2. Certification Regarding Debarment, Suspension, Ineligibility and Voluntary Exclusion – First Tier Participants:

a. The prospective first tier participant certifies to the best of its knowledge and belief, that it and its principals:

(1) Are not presently debarred, suspended, proposed for debarment, declared ineligible, or voluntarily excluded from participating in covered transactions by any Federal department or agency;

(2) Have not within a three-year period preceding this proposal been convicted of or had a civil judgment rendered against them for commission of fraud or a criminal offense in connection with obtaining, attempting to obtain, or performing a public (Federal, State or local) transaction or contract under a public transaction; violation of Federal or State antitrust statutes or commission of embezzlement, theft, forgery, bribery, falsification or destruction of records, making false statements, or receiving stolen property;

(3) Are not presently indicted for or otherwise criminally or civilly charged by a governmental entity (Federal, State or local) with commission of any of the offenses enumerated in paragraph (a)(2) of this certification; and

(4) Have not within a three-year period preceding this application/proposal had one or more public transactions (Federal, State or local) terminated for cause or default.

b. Where the prospective participant is unable to certify to any of the statements in this certification, such prospective participant shall attach an explanation to this proposal.

2. **Instructions for Certification - Lower Tier Participants:**

(Applicable to all subcontracts, purchase orders and other lower tier transactions requiring prior FHWA approval or estimated to cost $25,000 or more - 2 CFR Parts 180 and 1200)

a. By signing and submitting this proposal, the prospective lower tier is providing the certification set out below.

b. The certification in this clause is a material representation of fact upon which reliance was placed when this transaction was entered into. If it is later determined that the prospective lower tier participant knowingly rendered an erroneous certification, in addition to other remedies available to the Federal Government, the department, or agency with which this transaction originated may pursue available remedies, including suspension and/or debarment.

c. The prospective lower tier participant shall provide immediate written notice to the person to which this proposal is submitted if at any time the prospective lower tier participant learns that its certification was erroneous by reason of changed circumstances.

d. The terms "covered transaction," "debarred," "suspended," "ineligible," "participant," "person," "principal," and "voluntarily excluded," as used in this clause, are defined in 2 CFR Parts 180 and 1200. You may contact the person to which this proposal is submitted for assistance in obtaining a copy of those regulations. "First Tier Covered Transactions" refers to any covered transaction between a grantee or subgrantee of Federal funds and a participant (such as the prime or general contract). "Lower Tier Covered Transactions" refers to any covered transaction under a First Tier Covered Transaction (such as subcontracts). "First Tier Participant" refers to the participant who has entered into a covered transaction with a grantee or subgrantee of Federal funds (such as the prime or general contractor). "Lower Tier Participant" refers any participant who has entered into a covered transaction with a First Tier Participant or other Lower Tier Participants (such as subcontractors and suppliers).

e. The prospective lower tier participant agrees by submitting this proposal that, should the proposed covered transaction be entered into, it shall not knowingly enter into any lower tier covered transaction with a person who is debarred, suspended, declared ineligible, or voluntarily excluded from participation in this covered transaction, unless authorized by the department or agency with which this transaction originated.

f. The prospective lower tier participant further agrees by submitting this proposal that it will include this clause titled "Certification Regarding Debarment, Suspension, Ineligibility and Voluntary Exclusion-Lower Tier Covered Transaction," without modification, in all lower tier covered transactions and in all solicitations for lower tier covered transactions exceeding the $25,000 threshold.

g. A participant in a covered transaction may rely upon a certification of a prospective participant in a lower tier covered transaction that is not debarred, suspended, ineligible, or voluntarily excluded from the covered transaction, unless it knows that the certification is erroneous. A participant is responsible for ensuring that its principals are not suspended, debarred, or otherwise ineligible to participate in covered transactions. To verify the eligibility of its principals, as well as the eligibility of any lower tier prospective participants, each participant may, but is not required to, check the Excluded Parties List System website (https://www.epls.gov/), which is compiled by the General Services Administration.

h. Nothing contained in the foregoing shall be construed to require establishment of a system of records in order to render in good faith the certification required by this clause. The knowledge and information of participant is not required to exceed that which is normally possessed by a prudent person in the ordinary course of business dealings.

i. Except for transactions authorized under paragraph e of these instructions, if a participant in a covered transaction knowingly enters into a lower tier covered transaction with a person who is suspended, debarred, ineligible, or voluntarily excluded from participation in this transaction, in addition to other remedies available to the Federal Government, the

department or agency with which this transaction originated may pursue available remedies, including suspension and/or debarment.

* * * * *

Certification Regarding Debarment, Suspension, Ineligibility and Voluntary Exclusion--Lower Tier Participants:

1. The prospective lower tier participant certifies, by submission of this proposal, that neither it nor its principals is presently debarred, suspended, proposed for debarment, declared ineligible, or voluntarily excluded from participating in covered transactions by any Federal department or agency.

2. Where the prospective lower tier participant is unable to certify to any of the statements in this certification, such prospective participant shall attach an explanation to this proposal.

* * * * *

XI. CERTIFICATION REGARDING USE OF CONTRACT FUNDS FOR LOBBYING

This provision is applicable to all Federal-aid construction contracts and to all related subcontracts which exceed $100,000 (49 CFR 20).

1. The prospective participant certifies, by signing and submitting this bid or proposal, to the best of his or her knowledge and belief, that:

a. No Federal appropriated funds have been paid or will be paid, by or on behalf of the undersigned, to any person for influencing or attempting to influence an officer or employee of any Federal agency, a Member of Congress, an officer or employee of Congress, or an employee of a Member of Congress in connection with the awarding of any Federal contract, the making of any Federal grant, the making of any Federal loan, the entering into of any cooperative agreement, and the extension, continuation, renewal, amendment, or modification of any Federal contract, grant, loan, or cooperative agreement.

b. If any funds other than Federal appropriated funds have been paid or will be paid to any person for influencing or attempting to influence an officer or employee of any Federal agency, a Member of Congress, an officer or employee of Congress, or an employee of a Member of Congress in connection with this Federal contract, grant, loan, or cooperative agreement, the undersigned shall complete and submit Standard Form-LLL, "Disclosure Form to Report Lobbying," in accordance with its instructions.

2. This certification is a material representation of fact upon which reliance was placed when this transaction was made or entered into. Submission of this certification is a prerequisite for making or entering into this transaction imposed by 31 U.S.C. 1352. Any person who fails to file the required certification shall be subject to a civil penalty of not less than $10,000 and not more than $100,000 for each such failure.

3. The prospective participant also agrees by submitting its bid or proposal that the participant shall require that the language of this certification be included in all lower tier subcontracts, which exceed $100,000 and that all such recipients shall certify and disclose accordingly.

ATTACHMENT A - EMPLOYMENT AND MATERIALS PREFERENCE FOR APPALACHIAN DEVELOPMENT HIGHWAY SYSTEM OR APPALACHIAN LOCAL ACCESS ROAD CONTRACTS

This provision is applicable to all Federal-aid projects funded under the Appalachian Regional Development Act of 1965.

1. During the performance of this contract, the contractor undertaking to do work which is, or reasonably may be, done as on-site work, shall give preference to qualified persons who regularly reside in the labor area as designated by the DOL wherein the contract work is situated, or the subregion, or the Appalachian counties of the State wherein the contract work is situated, except:

a. To the extent that qualified persons regularly residing in the area are not available.

b. For the reasonable needs of the contractor to employ supervisory or specially experienced personnel necessary to assure an efficient execution of the contract work.

c. For the obligation of the contractor to offer employment to present or former employees as the result of a lawful collective bargaining contract, provided that the number of nonresident persons employed under this subparagraph (1c) shall not exceed 20 percent of the total number of employees employed by the contractor on the contract work, except as provided in subparagraph (4) below.

2. The contractor shall place a job order with the State Employment Service indicating (a) the classifications of the laborers, mechanics and other employees required to perform the contract work, (b) the number of employees required in each classification, (c) the date on which the participant estimates such employees will be required, and (d) any other pertinent information required by the State Employment Service to complete the job order form. The job order may be placed with the State Employment Service in writing or by telephone. If during the course of the contract work, the information submitted by the contractor in the original job order is substantially modified, the participant shall promptly notify the State Employment Service.

3. The contractor shall give full consideration to all qualified job applicants referred to him by the State Employment Service. The contractor is not required to grant employment to any job applicants who, in his opinion, are not qualified to perform the classification of work required.

4. If, within one week following the placing of a job order by the contractor with the State Employment Service, the State Employment Service is unable to refer any qualified job applicants to the contractor, or less than the number requested, the State Employment Service will forward a certificate to the contractor indicating the unavailability of applicants. Such certificate shall be made a part of the contractor's permanent project records. Upon receipt of this certificate, the contractor may employ persons who do not normally reside in the labor area to fill positions covered by the certificate, notwithstanding the provisions of subparagraph (1c) above.

5. The provisions of 23 CFR 633.207(e) allow the contracting agency to provide a contractual preference for the use of mineral resource materials native to the Appalachian region.

6. The contractor shall include the provisions of Sections 1 through 4 of this Attachment A in every subcontract for work which is, or reasonably may be, done as on-site work.

CITY OF EL PASO
COMPETITIVE SEALED PROPOSAL
SELECTION CRITERIA

NORTHGATE TRANSFER CENTER AND PARKING GARAGE
PROPOSAL No. 2016-748

Refer to Item 6 appearing in Section I-B of this solicitation entitled Method of Award Competitive Sealed Proposal.

COMPETITIVE SEALED PROPOSAL; BEST VALUE ASSESSMENT

- **INSTRUCTIONS TO OFFERORS: INFORMATION AND DOCUMENTATION RELATED TO ALL CRITERIA SPECIFIED WITHIN THIS SECTION MUST BE SUBMITTED WITH OFFEROR'S PROPOSAL. FAILURE TO FURNISH REQUIRED DOCUMENTATION AND INFORMATION RELATED TO THIS PROPOSAL MAY RESULT IN THE PROPOSAL BEING DEEMED INCOMPLETE, NON-RESPONSIVE OR MAY AFFECT POINT DETERMINATION.** The Owner is not responsible for locating or securing any information that is omitted from the Offerors proposal even if such information is reasonably available to the Owner.
- In conducting the Best Value assessment, the Owner (also referred to as "City") may use information provided by the Offeror and from other sources; however, the burden of providing thorough and complete information is the sole responsibility of the Offeror. **The City reserves the right to request additional information and/or verify information.**

A. Review Process

1. The Owner has determined that the Competitive Sealed Proposal method of procurement provides the best value for the Owner in this instance.
2. The Owner shall review the bid tabulation and proposal form to ensure that all proposals are responsive. Proposals that are not responsive shall not be further evaluated.
3. The owner shall evaluate all responsive proposals for responsibility. Offerors that are not responsible shall not be further evaluated.
4. Only offerors found to be both responsive and responsible shall be ranked according to the selection criteria. The offeror receiving the highest number of points shall be ranked first and each offeror thereafter shall be ranked in order of the number of points assigned to the offeror.

B. Criteria for determining Responsibility.

The City shall consider the following criteria in making its determination as to whether an Offeror or bidder (hereafter "Offeror") is responsible. Offerors the City determines not to be responsible shall not be ranked for award of contract. For purposes of this section B, "past

ten years" shall mean ten years immediately before the day the offer or bid (hereafter "offer") is submitted to the City. "Contract" shall mean any construction contract, whether completed or in progress, between Offeror and the City or any other owner within the past ten years.

1. Failure of Offeror to comply with contract requirements.
2. Default by Offeror resulting in termination of the contract by owner.
3. Insufficient qualifications, ability, capability, and skill of the Offeror to perform the contract.
4. Insufficient character, responsibility, integrity, reputation or experience of the Offeror, including but not limited to its subcontractors and project managers and superintendents.
5. Insufficient ability of Offeror to perform the contract promptly or within the time required in the contract, without delay or interference and whether the Offeror followed owner approved schedules.
6. Noncompliance by the Offeror with specification requirements relating to time of submission of specified data such as samples, models, drawings, certificates, pay applications, payrolls or other information on contracts in the last three years.
7. Overall poor performance by the Offeror on previous contracts.
8. Offeror does not have the adequate plant, equipment, and personnel to do the work properly and expeditiously.
9. Insufficient safety record and practices of the Offeror.
10. Insufficient cooperativeness and responsiveness by Offeror with owner, designer, subcontractors and suppliers of previous contacts.
11. Insufficient financial resources of Offeror that could adversely impact Offeror's ability to perform the contract or to pay subcontractors and suppliers in a timely manner.
12. Insufficient quality of performance (work, labor and materials) and quality control procedures and practices by Offeror on contracts.
13. The Offeror has insufficient financial, staffing, facility or other resources to meet the requirements of the warranty periods required in the contract for which the offer was submitted.
14. The Offeror has failed to demonstrate that he is able to comply with Owner's health insurance requirements for the proposed contract.

C. Selection Criteria:

The Offerors that are determined to be responsible shall be scored and ranked in accordance with the following criteria:

PART I – CSP Evaluation Factors

The evaluation of the Competitive Sealed Proposals for the Northgate Transfer Center and Parking Garage project will include an evaluation of the cost, qualifications and technical expertise presented in the proposals received. The evaluation of the Competitive Sealed Proposals for the project is designed to award the contract to the offers found to be both responsive and responsible according to the selection criteria.

The Evaluation Committee will score the competitive sealed proposals based on the evaluation of the criteria indicated below to identify a recommended offeror for consideration. All proposals should be submitted following the factors and sub factors format established in the evaluation criteria of this document. Failure to provide the requested information in the appropriate location will result in disqualification. Proposals will be evaluated based on the following Evaluation Factors:

EVALUATION FACTORS	MAXIMUM POINTS
A. Offeror's Proposed Bid. (Bid Price)	45 Points
B. Offeror's Experience and Reputation	25 Points
C. Quality of the Offeror's Goods or Services	10 Points
D. Proposed Key Personnel	10 Points
E. Concrete Subcontractor Qualifications	10 Points

Evaluation Factors Description

The maximum points that shall be awarded for each of the Evaluation Factors are detailed and described below.

FACTOR A - Offeror's Proposed Bid **45 pts.**

1. Offeror to provide complete bid form providing cost for base bid and all bid options. Complete bid forms must acknowledge receipt of all addenda received prior to bid date. Points will be allocated according to the calculation provided here.

Price Maximum 45 Points	Lowest Proposal Amount	Divided by Offeror's Amount	X 45	Total Points

FACTOR B — Offeror's Experience and Reputation 25 pts.

1. Evidence and documentation of prior experience that demonstrates the offeror's ability to satisfactorily perform construction required services. The offeror shall submit a minimum of three signature projects completed by the offeror's prime firm to demonstrate the ability of the prime firm to manage and construct a project similar in complexity and cost to the Northgate Transfer Center and Parking Garage within the past ***10*** years. The project information submitted representing the project experience of the Offeror will be evaluated and scored by the committee. The offerer shall include the following information for each project:

a) The project location.

b) Client name.

c) Key contact person, address, telephone number and email address.

d) The prime firm's role.

e) Project budget and Final construction cost.

f) Offerer to provide a detailed summary of each project. The summary will provide an explanation of how the work similar in complexity to the work required for the Northgate Transfer Center and Parking Garage.

g) Providing graphic images of similar projects is encouraged.

2. Client reference check. For the three projects listed, client contacts will be asked to evaluate the offeror performance according to the following criteria. Bidders shall provide up-to-date Client Contact Information. The Owner will communicate with the contacts provided in order to evaluate experience and performance. Failure to do so will result in zero points. No partial points will be awarded.

a) **Quality of Services Provided**; Did the offeror provide comprehensive and complete services to successfully meet the user needs represented in the original project scope and accommodate the requirements of owner change requests?

b) **Timeliness of Performance**; Was the offeror successful in planning and providing realistic schedules, monitoring performance, managing the completion of work in time, and implementing corrections/changes in a timely manner?

Factor C — Quality of the Offeror's Goods or Services 10 pts.

1. Offeror to provide a statement of their understanding of the scope of work, the methodology and approach offeror will utilize to successfully completing the project on time.

2. Offeror to provide a comprehensive gantt type chart showing timeline of how offerer proposes to complete the project within the proposed project schedule—considering all phase sequencing and substantial/final completion dates. The timeline must incorporate at least 30 contingency days for unexpected delays in performance of the work, such as weather and unforeseen conditions.

3. Comment on the feasibility of the project timeline and project phasing. Include details on how offeror will sequence construction and stage and complete site throughout the duration of the project.

4. Describe the offeror's team approach and tools to be utilized to manage project progression and ensure successful project completion. This may include unique or specialized processes like the use of Building Information Modeling (BIM) in project delivery, or other factors that distinguish the Offeror from others.

5. Experience and knowledge with local conditions: Using the signature project examples provided, offeror to demonstrate their experience dealing with local issues including, but not limited to: Local bidding conditions, working with local trades and disciplines area utilities, infrastructure, permitting and regional agency coordination. Offeror to explain how this experience will contribute to successful completion of the project on time.

Factor D - Proposed Key Personnel 10 pts.

Offeror shall demonstrate relevant project experience similar in complexity and cost of the following key personnel proposed for this project:

1. Principal in Charge - Primary Point of Contact
2. Estimator
3. Project Manager
4. Construction Superintendent(s)
5. Concrete Contractor's Project Manager

For the key personnel referenced above, offeror shall provide an organizational chart reflecting the position and general responsibilities, along with biographical data including; name of individual, company position, years of relevant experience, work and educational background and role and tasks to be assigned on this project. Offeror shall also provide

percentage of workweek to be committed to this project and on-site availability for all key personnel.

Factor E - Concrete Subcontractor Qualifications 10 pts.

Construction team's concrete formwork, placement and finishing construction expertise

Whether self-performed or subcontracted***,*** the Concrete Contractor is the entity responsible for constructing the driveways and roadwork, plaza area, foundations, exposed support element structures and parking garage structure including:

- Horizontal and vertical formwork
- Sleeving and imbedding work
- Reinforcement placement and coordination
- Expansion and control jointing and sealant installation
- Surface finishes including textures and color both integral and applied

The offeror and/or offeror' s Concrete Contractor shall demonstrate extensive commercial vertical as well as horizontal concrete structure and paving construction skill and experience and the successful completion of a **minimum of three multi-level concrete structure** projects within the past ***10*** years.

For the three project examples provided, the offerer shall include:

a. The project location.

b. Client name.

c. Key contact person, address, telephone number and email address.

d. Identification of Offeror or Pool Contractor's role in the project.

e. Project budget and final construction cost.

f. Schedule completion deadline and actual completion date.

g. A detailed summary of each project.

h. Providing graphic images of similar projects is encouraged.

Concrete Contractor qualifications are established for this project to assure the quality of the parking garage structure, plaza and plaza elements and driveway/roadway infrastructure construction necessary and to perform quality work as solely determined by the Owner. The purpose of such quality assurance is to protect the public health, safety and welfare.

D. Competitive Sealed Proposal Evaluation/Appeal Process.

1. **Ranking offers**. All proposals will be ranked based on section C by the City of El Paso. The final rankings will then be forwarded to the City Manager for approval.
2. **Authorization to negotiate**. The City Manager shall review the final ranking. The City will start negotiating with the highest-ranking Offeror (the "Selected Offeror") only upon authorization from the City Manager. Upon reviewing written notice from the City of El Paso said negotiations must be completed within 30 days. If negotiations cannot be completed in 30 days the City will end negotiations and negotiate in order of ranking.

3. **Notice of Initial Ranking and filing protests**. The Offerors will be notified in writing (by fax, email or regular mail) of the final ranking. The ranking shall be sent with the notice and shall show the order of the ranking and points received by each Offeror. Offerors shall have three city working days from the day of their receipt of the notice to challenge the ranking by filing a protest with the City's Purchasing Director. The protest shall state the basis for the challenge of the ranking. **All Offerors will be notified of any protests filed.**

4. **Review of protests**. The Purchasing Director will review the validity of the protest regarding the ranking and make a recommendation to the City Manager. The City Manager will review the rankings and Purchasing Director's recommendation and (1) approve the rankings and the Selected Offeror, (2) direct CIP staff to reconsider the rankings or (3) take other appropriate action in compliance with state laws and the City's purchasing policies.

5. **Notice of results of review and new ranking.** All Offerors shall be given notice of the City Manager's determination upon completion of the review of the protest. If reconsideration of the ranking is not required by the City Manager, the ranking shall be final as of the date of the City Manager's determination and no further protest shall be allowed.

   If reconsideration of the ranking is required, notice of the results of the reconsideration of the ranking shall be provided to all Offerors.

6. **Protesting the new ranking** All Offerors may protest the re-ranking of the Offerors following the same process as set forth above.

7. **Scope of negotiations** City staff will negotiate with the Selected Offeror and may discuss options for scope or time modifications to the proposed contract and any price change associated with the modifications.

8. **Reaching agreement or terminating selection process** If the City staff and the Selected Offeror do not reach an agreement within thirty consecutive calendar days of the date the Selected Offeror received notice of the final ranking, the Selected Offeror shall be notified in writing that negotiations are terminated and the Offeror shall not be permitted to enter into a contract with the City. The decision of the City to terminate negotiations is final and not subject to protest or appeal.

9. **City Council approval of contract**. The Capital Improvement and Purchasing & Strategic Sourcing Departments shall recommend to Council that the contract be awarded to the highest ranked Offeror with whom the City was able to reach an agreement on the terms and conditions of the negotiated contract

COMPETITIVE SEALED PROPOSAL

TO THE HONORABLE MAYOR AND CITY COUNCIL
CITY OF EL PASO
EL PASO, TEXAS

The undersigned having familiarized themselves with the local conditions affecting the cost of work and with the Contract documents consisting of Invitation to Bid, Instructions to Bidders, General Conditions, the Contractor's Bid, Special Bid Conditions, Applicable Wage Rates, the Contract Form, plans, specifications, drawings, and addenda on file in the Purchasing & Strategic Sourcing Department of the City of El Paso, hereby propose to perform everything required to be performed and to provide, furnish and install all the labor, materials, necessary tools, expendable equipment, and all utility and transportation services, and to complete in a workmanlike manner all the work required for the

NORTHGATE TRANSFER CENTER
AND PARKING GARAGE
Solicitation No. 2016-748

within the specified limits and in accordance with the plans, including Addenda numbers

AMENDMENT	DATED	AMENDMENT	DATED	AMENDMENT	DATED
A001	_____	A002	_____	A003	_____
A004	_____	A005	_____	A006	_____

AT THE FOLLOWING LUMP SUM:

ONLY ONE BIDDER MAY BE AWARDED THIS CONTRACT PURSUANT TO THIS PROPOSAL

Fee proposal will be evaluated based upon the base bid plus options if the options are taken. The options will only be awarded in sequential order if the base bid plus one or more options are within the project budget.

BASE BID:

The undersigned agrees to perform all of the work required for the total amount of:

$_____

OPTION 1:

The undersigned agrees to perform all of the work required for the total amount of:

$_____

OPTION 2:

The undersigned agrees to perform all of the work required for the total amount of:

$_____

COMPANY NAME: _____

OFFEROR'S SIGNATURE: _____ PRINT NAME: _____

OPTION 3:

The undersigned agrees to perform all of the work required for the total amount of:

$_____

OPTION 4:

The undersigned agrees to perform all of the work required for the total amount of:

$_____

A **Schedule of Values** must be submitted with the proposal for all Lump Sum offers. The information on this schedule will be for office use only.

CONTRACT TIME AND LIQUIDATED DAMAGES

Offeror agrees to commence work on a date to be specified in a written "Notice to Proceed" issued by the Owner. The Contract Time shall begin on the date to commence work specified in the "Notice to Proceed" and shall run for Three Hundred Fifty (350) additional CONSECUTIVE CALENDAR DAYS thereafter. Offeror shall Substantially Complete the project within Three Hundred Five (305) CONSECUTIVE CALENDAR DAYS after the date to commence work in the "Notice to Proceed." Offeror agrees to pay, as liquidated damages, the sum of Two Hundred Seventy-Eight Dollars and Sixty Cents ($278.60) for each consecutive calendar day after the date of Substantial Completion, as hereinafter provided in the General Conditions. Offeror further agrees to pay as liquidated damages the sum of Two Hundred Eighty Dollars and Fifteen Cents ($280.15) for each consecutive calendar day after the expiration of the Contract Time for Remaining Work, as provided in Paragraph 6.8.3.1 of the General Conditions.

COMPANY NAME: _____

OFFEROR'S SIGNATURE: _____ PRINT NAME: _____

PROPOSAL

Enclosed with this proposal is a bid bond for five percent (5%) of the TOTAL bid price including base bid(s), alternate(s) and option(s) which is agreed shall be collected and retained by the owner(s) as liquidated damages in the event this proposal is accepted by the Owner within ninety (90) consecutive calendar days after the date advised for the reception of bids and the undersigned fails to execute the contract and the required performance and payment bonds with the Owner within fourteen (14) consecutive calendar days after the date said proposal is accepted; otherwise, the said bid security shall be returned to the undersigned upon demand.

THE UNDERSIGNED OFFEROR REPRESENTS TO THE CITY AND TO THE OTHER OFFERORS THAT HIS/HER PROPOSAL, AND THE ESTIMATES ON WHICH IT IS BASED, HAS BEEN CAREFULLY CHECKED AND CONTAINS NO ERRORS, AND NOTHING HAS BEEN OMITTED OR OVERLOOKED IN DETERMINING THE AMOUNTS OFFERED.

OFFEROR'S NAME: _____
(AS IT APPEARS ON ORGANIZATION CERTIFICATE ISSUED BY STATE IN WHICH COMPANY WAS ORGANIZED)

BY: _____ _____
Signature Date

_____ _____ _____
Print Signer's name & title Telephone Fax

_____ _____
Address City, State, Zip Code

_____ _____ _____
eMail address Physical Address of Business (if different from above) City, State, Zip Code

IF THE OFFEROR BE A CORPORATION, THE FOLLOWING CERTIFICATE SHOULD BE EXECUTED:

I, _____, certify that I am the _____ Secretary of the corporation named as Offeror hereinabove; that _____, who signed the aforegoing contract on behalf of the Offeror, was then _____ of said corporation; that said proposal was duly signed for and in behalf of said corporation by authority of its governing body, and is within the scope of its corporate powers.

_____
CORPORATE SECRETARY SIGNATURE AND CORPORATE SEAL

CERTIFICATION OF NON-COLLUSION

PROJECT: NORTHGATE TRANSFER CENTER AND PARKING GARAGE

SOLICITATION NO: 2016-748

The offeror, being sworn, deposes and says, _____, the contractor, submitting this proposal, and that its agents, officers or employers have not directly or indirectly entered into any agreements, participated in any collusion, or otherwise taken any action in restraint of free competitive bidding in connection with this proposal or with any City official.

_____
Signature

_____
Title

_____
Date

THE STATE OF TEXAS }
COUNTY OF EL PASO }

SURETY'S NO.

BID BOND

KNOW ALL MEN BY THESE PRESENTS, that _____, (hereinafter called the Principal), as Principal, and _____ as Surety, are hereby held and firmly bound unto THE CITY OF EL PASO, as Owner/Obligee (hereafter "Owner"), in the penal sum of _____. _____for the payment of which, well and truly to be made, we hereby jointly and severally bind ourselves, our heirs, executors, administrators, successors and assigns.

SIGNED, this _____ day of _____, 20_____.

The conditions of the above obligation are such that whereas the Principal has submitted to the City of El Paso a certain bid, attached hereto and hereby made a part hereof, to enter into a contract in writing for the **Northgate Transfer Center and Parking Garage, Solicitation No. 2016-748.** NOW, THEREFORE,

a) If said bid shall be rejected, or in the alternate,

b) If said bid shall be accepted and within fourteen (14) consecutive calendar days after the Principal has received notice of his acceptance, the Principal shall properly complete, execute, and deliver insurance certificates and a contract in the form approved by the Owner and shall furnish a bond for his faithful performance of said contract, and for the payment of all persons performing labor or furnishing materials in connection therewith, and shall in all other respects perform the agreement created by the acceptance of said Bid, then this obligation shall be void; otherwise the same shall remain in force and effect, it being expressly understood and agree that the liability of the Surety for any and all claims hereunder shall, in no event, exceed the penal amount of this obligation, as herein stated.

The Surety, for value received, hereby stipulates and agrees that the obligations of said Surety and its bond shall be in no way impaired or affected by any extension of the time within which the OWNER MAY ACCEPT such bid, such extension to be upon notice to the Surety by the Principal.

IN WITNESS, WHEREOF, the Principal and the Surety have hereunto set their hands and seals, and such of them as are corporations have caused their corporate seals to be hereto affixed and these presents to be signed by their proper officers, the day and year first set forth above.

_____ _____ (Seal)
Principal • Company Name — Signed by (Principal Agent)

_____ _____
Address — Principal Agent's Name (Printed or Typed)

_____ _____ _____
City, State, Zip Code — Telephone No. — Fax No.

_____ _____ (Seal)
Surety • Company Name — Signed by (Surety Agent)

_____ _____
Address — Surety Agent's Name (Printed or Typed)

_____ _____ _____
City, State, Zip Code — Telephone No. — Fax No.

USE BID BOND FORM ON

PAGE I-D-1

DO NOT SUBSTITUTE BID BOND FORM

NOTE:

THE BID BOND MUST BE SIGNED & SEALED

BY BOTH THE SURETY & THE PRINCIPAL

AGENT RESIDENT DESIGNATION

NORTHGATE TRANSFER CENTER AND PARKING GARAGE
SOLICITATION NO. 2016-748

SURETY INFORMATION

_____, as Surety on the Bid Bond for this contract, hereby appoints the following resident agent who resides within the County of El Paso and to whom any requisite notices may be delivered and on whom service of process may be had in matters arising out of suretyship, pursuant to Section 3503.003 of the Texas Insurance Code and Chapter 2253, Texas Government Code.

Assigned By:

_____(Seal)
Surety Agent

_____
Surety Agent's Signature

_____
Date

AGENT INFORMATION

Agent Resident: _____

Business Address: _____

_____

Telephone & Fax Nos. _____

Acknowledged By:

_____
Agent Resident's Name (Printed or Typed)

_____
Agent Resident's Signature

SUPPLEMENTAL BIDDER INFORMATION
Part I

NORTHGATE TRANSFER CENTER AND PARKING GARAGE

SOLICITATION No. 2016-748

1. The legal name and the business address of the bidder are:

_____

_____

2. The bidder is doing business as a: _____ *(Sole Proprietorship, Corporation, Joint Venture, Partnership, Limited Partnership, Limited Liability Company, etc.)* organized in the County of _____, State of _____,
(Name of State)

and is ☐ publicly / ☐ privately owned.

3. Race or ethnic group designation of bidder. Enter race or ethnic group in the appropriate line:

☐ Black	☐ Hispanic	☐ Oriental	☐ American Indian
☐ Eskimo	☐ Aleut	☐ White	☐ Pacific Islander

4. The name, title and address of the owner, partner, or officers of the bidder are:

NAME TITLE ADDRESS

_____

_____

_____

5. The names and addresses of all other persons, both natural and corporate, having a substantial interest in the bidder, and the nature of the interest are:

NAME TITLE NATURE OF INTEREST

_____

_____

_____

6. The names, addresses and trade classifications of all other building construction contractors in which the bidder has a substantial interest are:

NAME TITLE TRADE CLASSIFICATION

_____

_____

_____

SUPPLEMENTAL BIDDER INFORMATION
PART II

SUBCONTRACTOR AND/OR SUPPLIER IDENTIFICATION

NORTHGATE TRANSFER CENTER AND PARKING GARAGE

SOLICITATION No. 2016-748 **BIDDER: _____**

The Bidder shall indicate below the name of each subcontractor and/or supplier the bidder will use in the performance of the contract. The Bidder shall specify the work to be performed by the subcontractor or the materials to be provided by the supplier, the amount of the subcontract or purchase order, and the percentage of the contract the Bidder will expand throughout the life of the project. **Any changes in subcontractor and/or supplier listed below shall require additional approval prior to contract execution.**

NOTE: Subcontractors listed in Reference Section must appear on this list.

Name & Address	Service / Supplies	$ Value	% of Contract
	TOTAL:		
		(Dollars)	(% of Contract)

SUPPLEMENTAL BIDDERS INFORMATION
PART III

STATEMENT OF INCORPORATED MATERIALS

NORTHGATE TRANSFER CENTER AND PARKING GARAGE

SOLICITATION No. 2016-748 **BIDDER**: _____

The successful Bidder shall be required to pay state sales tax on materials not incorporated into the completed project. Materials not incorporated into the completed project include, but are not limited to, the purchase, rental or lease of tools, machinery and equipment used in the performance of the awarded contract.

The Successful Bidder may be required to pay state sales tax on consumables used in construction contracts. Consumables are items used or consumed by a contractor on a project such as, but not limited to, non-reusable concrete forms, masking tape, corrugated cardboard, natural gas, and electricity.

It is the obligation of the Bidder to ascertain the amount of state sales tax to be paid and to include this amount in his/her bid submitted to the Owner.

The Successful Bidder is not required to pay state sales tax on materials incorporated into the completed project such as mortar, bricks, nails and caulk which are annexed to and become part of the completed project.

The State of Texas requires a "separated contract" for tax exemption purposes. The Bidder must separate or identify the amount of incorporated materials to be used in the completed project that are not subject to state sales tax. This form complies with the requirement.

The amounts entered for base bids, alternates and unit prices are the agreed contract prices for *incorporated materials which are not subject to state sales tax*

Base Bid	$ _____
Option I	$ _____
Option 2	$ _____
Option 3	$ _____
Option 4	$ _____

[SEE NEXT PAGE FOR DEFINITIONS]

DEFINITIONS

SMALL BUSINESS CONCERN:
Less than $1,000,000.00 in annual receipts or fewer than one hundred [100] full time employees.

DISADVANTAGED BUSINESS ENTERPRISE:
At least fifty-one percent [51%] owned by one or more socially disadvantaged individuals, or a publicly held corporation with at least fifty-one percent [51%] of the stock owned by one or more such individuals.

WOMAN-OWNED BUSINESS:
At least fifty-one percent [51%] owned by a woman, or women, who also control and operate the business. "Control" in this context means making policy decisions. "Operate" in this context means actively carrying on day to day management

HANDICAPPED:
At least fifty-one percent [51%] owned by a person or persons with an orthopedic, otic [hearing], optic [visual], or mental impairment which substantially limits one or more of their major life activities.

LOCAL BUSINESS:
A business with a Tier 1 or Tier 2 principal place of business within the incorporated city limits of El Paso, Texas.

HUB [HISTORICALLY UNDERUTILIZED BUSINESS]
A Business Enterprise, which has been granted a Certificate by the State of Texas, as a Historically Underutilized Business. The City of El Paso utilizes information on Historically Underutilized Businesses (HUB), from the State of Texas Comptroller of Public Accounts (CPA), HUB Program, 1711 San Jacinto Ave. P.O. Box 13186, Austin, Texas 78711. The City encourages you to contact the State on the HUB program, if you feel you may qualify.

I certify that the foregoing information is a full, true and correct statement of the facts. I understand that my failure to respond to three (3) solicitations for any one class of items could cause the City of El Paso Purchasing and Strategic Sourcing Department to discontinue sending solicitations for that particular class. I also understand it is my responsibility to inform City of El Paso Purchasing and Strategic Sourcing Department in writing of any changes to this application; i.e., change of address, change of class etc. The City of El Paso does not guarantee you will receive all solicitations in your business categories. Notices of Solicitations are posted in the Purchasing and Strategic Sourcing Department, at the Chamber of Commerce, El Paso Hispanic Chamber of Commerce and at The Procurement Outreach Center, as well as being published in the official designated newspaper.

_____
Signature of Person Authorized to Sign Application

_____
Title Date

Purchasing and Strategic Sourcing Department

AFFIDAVIT

THIS IS AN OFFICIAL PURCHASING AND STRATEGIC SOURCING DEPARTMENT DOCUMENT – RETAIN WITH BID FILE

Before me, the undersigned official, on this day, personally appeared _____, a person known to me to be the person whose signature appears below, whom after being duly sworn upon his/her oath deposed and said:

1. My name is _____. I am over the age of 18, have never been convicted of a crime and am competent to make this affidavit.

2. I am an authorized representative of the following company or Firm:_____
_____

3. Listed below are all the names the company/firm uses and has used in the past and I attest that all such names describe the company currently submitting a response to Solicitation No. _____.

_____

_____

_____

_____

4. In addition to completing this Affidavit, I have included a copy of the Organization Certificate issued by the Secretary of State of the state in which the company was organized and if using a trade name in the solicitation documents other than the name under which the company was organized, a copy of the Assumed Name Certificate/DBA Certificate from the County.

5. **Note: This bidder understands that by providing false information on this Affidavit, it may be considered a non-responsible bidder on this and future solicitations and may result in discontinuation of any/all business with the City of El Paso.**

_____
Signature

SUBSCRIBED AND SWORN to before me on this _____ day of _____, _____.

_____
NOTARY PUBLIC

_____
PRINT NAME

_____
MY COMMISSION EXPIRES

City Of El Paso
Purchasing and Strategic Sourcing Department

INDEBTEDNESS AFFIDAVIT

THIS IS AN OFFICIAL PURCHASING AND STRATEGIC SOURCING DEPARTMENT DOCUMENT – RETAIN WITH PURCHASE ORDER FILE

Before me, the undersigned authority, on this day personally appeared _____ [FULL NAME] (hereafter "***Affiant***"), a person known to me to be the person whose signature appears below, whom after being duly sworn upon his/her oath deposed stated as follows:

1. Affiant is authorized and competent to give this affidavit and has personal knowledge of the facts and matters herein stated.

2. Affiant is an authorized representative of the following company or firm: _____ [*Contracting Entity's Corporate or Legal Name*] (hereafter, "***Contracting Entity***").

3. Affiant is submitting this affidavit in response to the following bid: _____ ___ [*Solicitation No. and Solicitation Name*] which is expected to be in an amount that exceeds $25,000.

4. Contracting Entity is organized as a business entity as noted below (check box as applicable):

For Profit Entity (select below):

- ☐ Sole Proprietorship
- ☐ Corporation
- ☐ Partnership
- ☐ Limited Partnership
- ☐ Joint Venture
- ☐ Limited Liability Company
- ☐ Other (Specify type in space provided below):

_____

For Non-Profit Entity (select below):

- ☐Non-Profit Corporation
- ☐Unincorporated Association

5. The information shown below is true and correct for the Contracting Entity and all owners of 5% or more of the Contracting Entity and, where the Contracting Entity is a non-profit entity, the required information has been shown for each officer. [Note: In all cases, use FULL name, business and residence addresses and telephone numbers.]

Contracting Entity:

Name	
Business Address [No./Street]	

City/State/Zip Code	
Telephone Number	
Resident Address (if applicable)	
City/State/Zip Code	
Telephone Number	
Federal Tax ID Number	
Texas Sales Tax Number	

5% Owner(s) (If none, state "None"):**

Name	
Business Address [No./Street]	
City/State/Zip Code	
Telephone Number	
Resident Address (if applicable)	
City/State/Zip Code	
Telephone Number	

**Attach additional pages if necessary to supply the required names and addresses.

6. Affiant understands that in accordance with Ordinance No. 016529 of the City of El Paso (the "***City***"), the City may refuse to award a contract to or enter into a transaction with an apparent low bidder or successful proposer that is indebted to the City.

7. Affiant understands that the term "***Debt***" shall mean any sum of money, which is owed to the City by a Contracting Entity, Owner, or Vendor, that exceeds one hundred dollars ($100.00) and that has become Delinquent, as defined hereinafter. Such Debt shall include but not be limited to: (i) property taxes; (ii) hotel/motel occupancy taxes; and (iii) license and permit fees.

8. Affiant understands that the term "***Delinquent***" shall mean any unpaid Debt that is past due for sixty (60) days or more and, which is not currently subject to challenge, protest, or appeal.

9. Affiant represents that to the best of its knowledge, the Contracting Entity is not indebted to the City in any amounts as described in Item No. 7 above, as of the date of the submittal. If the Contracting Entity is indebted to the City, the following represents the type and estimated amount of indebtedness:

   _____

   _____

   _____

10. If the Contracting Entity is indebted to the City, describe any payment arrangements that have been entered into to settle the Debt.

    _____

    _____

    _____

    _____

11. In the event that the City refuses to do business with a Contracting Entity due to any indebtedness listed above or as determined by the City Financial Services Department, the Contracting Agency may appeal this determination in accordance with the appeal regulations in Ordinance 016529.

Affiant certifies that he is duly authorized to submit the above information on behalf of the Contracting Entity, that Affiant is associated with the Contracting Entity in the capacity noted above and has personal knowledge of the accuracy of the information provided herein; and that the information provided herein is true and correct to the best of Affiant's knowledge and belief. Affiant understands that providing false information on this form shall be grounds for debarment and discontinuation of any/all business with the City of El Paso.

_____

Signature

SUBSCRIBED AND SWORN to before me on this _____ day of _____, 20_____.

_____

Notary Public

_____

Printed Name

_____

Commission Expires

Contractor Experience References

Notice

References:

The offeror is responsible for ensuring the accuracy of the contact information for the references provided. **The City shall not contact the offeror** for replacement references and/or contact information if said e-mail addresses or telephones numbers are not valid or connected.

In addition to the above, the Offeror is encouraged to inform said references that they shall initially be contacted via e-mail at the e-mail address provided herein. If a response to the e-mail is not provided within the designated time frame, the City will attempt to contact the reference by telephone at the number provided below. If the reference does not respond after two attempts via telephone the offeror shall receive zero points for said reference.

Subcontractors:

Contractor or Subcontractor performing the work shall have the required specifications.

If the Contractor can meet solicitation requirements through a subcontractor, then it must include five (5) references for the subcontractor's experience.

Contractor Experience Reference

2016-748 NORTHGATE TRANSFER CENTER AND PARKING GARAGE

Company Name: _____

Please provide **DETAILED** information for a project that meets the following criteria and that was completed by your organization within the **past ten years**.

PROJECT INFORMATION REQUIRED – **Experience with concrete frame buildings**.

Please provide all the information requested and utilize additional sheets as necessary.

PROJECT: Name and Location of Project:	
Owner's Name	Address
Phone Number	Email
Construction Value	Completion Date
Project Description/Scope of Work	

Contractor Experience Reference

2016-748 NORTHGATE TRANSFER CENTER AND PARKING GARAGE

Company Name: _____

Please provide **DETAILED** information for a project that meets the following criteria and that was completed by your organization within the **past ten years**.

PROJECT INFORMATION REQUIRED – **Experience with parking garage structures;**

Please provide all the information requested and utilize additional sheets as necessary. See Section I-C for detail project requirements.

PROJECT: Name and Location of Project:	
Owner's Name	Address
Phone Number	Email
Construction Value	Completion Date
Project Description/Scope of Work	

Contractor Experience Reference

2016-748 NORTHGATE TRANSFER CENTER AND PARKING GARAGE

Company Name: _____

Please provide **DETAILED** information for a project that meets the following criteria and that was completed by your organization within the **past ten years**.

PROJECT INFORMATION REQUIRED – **Experience with colored and/or stamped pattern concrete work or projects.**

Please provide all the information requested and utilize additional sheets as necessary. See Section I-C for detail project requirements.

PROJECT: Name and Location of Project	
Owner's Name	Address
Phone Number	Email
Construction Value	Completion Date
Project Description/Scope of Work	

Form **W-9**
(Rev. December 2014)
Department of the Treasury
Internal Revenue Service

Request for Taxpayer Identification Number and Certification

Give Form to the requester. Do not send to the IRS.

Print or type
See **Specific Instructions** on page 2.

1 Name (as shown on your income tax return). Name is required on this line; do not leave this line blank.

2 Business name/disregarded entity name, if different from above

3 Check appropriate box for federal tax classification; check only **one** of the following seven boxes:

☐ Individual/sole proprietor or single-member LLC ☐ C Corporation ☐ S Corporation ☐ Partnership ☐ Trust/estate

☐ Limited liability company. Enter the tax classification (C=C corporation, S=S corporation, P=partnership) ▶ _____

Note. For a single-member LLC that is disregarded, do not check LLC; check the appropriate box in the line above for the tax classification of the single-member owner.

☐ Other (see instructions) ▶

4 Exemptions (codes apply only to certain entities, not individuals; see instructions on page 3):

Exempt payee code (if any) _____

Exemption from FATCA reporting code (if any) _____

(Applies to accounts maintained outside the U.S.)

5 Address (number, street, and apt. or suite no.)

Requester's name and address (optional)

6 City, state, and ZIP code

7 List account number(s) here (optional)

Part I Taxpayer Identification Number (TIN)

Enter your TIN in the appropriate box. The TIN provided must match the name given on line 1 to avoid backup withholding. For individuals, this is generally your social security number (SSN). However, for a resident alien, sole proprietor, or disregarded entity, see the Part I instructions on page 3. For other entities, it is your employer identification number (EIN). If you do not have a number, see *How to get a TIN* on page 3.

Note. If the account is in more than one name, see the instructions for line 1 and the chart on page 4 for guidelines on whose number to enter.

Social security number

			–			–				

or

Employer identification number

		–							

Part II Certification

Under penalties of perjury, I certify that:

1. The number shown on this form is my correct taxpayer identification number (or I am waiting for a number to be issued to me); and
2. I am not subject to backup withholding because: (a) I am exempt from backup withholding, or (b) I have not been notified by the Internal Revenue Service (IRS) that I am subject to backup withholding as a result of a failure to report all interest or dividends, or (c) the IRS has notified me that I am no longer subject to backup withholding; and
3. I am a U.S. citizen or other U.S. person (defined below); and
4. The FATCA code(s) entered on this form (if any) indicating that I am exempt from FATCA reporting is correct.

Certification instructions. You must cross out item 2 above if you have been notified by the IRS that you are currently subject to backup withholding because you have failed to report all interest and dividends on your tax return. For real estate transactions, item 2 does not apply. For mortgage interest paid, acquisition or abandonment of secured property, cancellation of debt, contributions to an individual retirement arrangement (IRA), and generally, payments other than interest and dividends, you are not required to sign the certification, but you must provide your correct TIN. See the instructions on page 3.

Sign Here	**Signature of U.S. person ▶**	**Date ▶**

General Instructions

Section references are to the Internal Revenue Code unless otherwise noted.

Future developments. Information about developments affecting Form W-9 (such as legislation enacted after we release it) is at *www.irs.gov/fw9*.

Purpose of Form

An individual or entity (Form W-9 requester) who is required to file an information return with the IRS must obtain your correct taxpayer identification number (TIN) which may be your social security number (SSN), individual taxpayer identification number (ITIN), adoption taxpayer identification number (ATIN), or employer identification number (EIN), to report on an information return the amount paid to you, or other amount reportable on an information return. Examples of information returns include, but are not limited to, the following:

- Form 1099-INT (interest earned or paid)
- Form 1099-DIV (dividends, including those from stocks or mutual funds)
- Form 1099-MISC (various types of income, prizes, awards, or gross proceeds)
- Form 1099-B (stock or mutual fund sales and certain other transactions by brokers)
- Form 1099-S (proceeds from real estate transactions)
- Form 1099-K (merchant card and third party network transactions)
- Form 1098 (home mortgage interest), 1098-E (student loan interest), 1098-T (tuition)
- Form 1099-C (canceled debt)
- Form 1099-A (acquisition or abandonment of secured property)

Use Form W-9 only if you are a U.S. person (including a resident alien), to provide your correct TIN.

If you do not return Form W-9 to the requester with a TIN, you might be subject to backup withholding. See *What is backup withholding?* on page 2.

By signing the filled-out form, you:

1. Certify that the TIN you are giving is correct (or you are waiting for a number to be issued),
2. Certify that you are not subject to backup withholding, or
3. Claim exemption from backup withholding if you are a U.S. exempt payee. If applicable, you are also certifying that as a U.S. person, your allocable share of any partnership income from a U.S. trade or business is not subject to the withholding tax on foreign partners' share of effectively connected income, and
4. Certify that FATCA code(s) entered on this form (if any) indicating that you are exempt from the FATCA reporting, is correct. See *What is FATCA reporting?* on page 2 for further information.

Note. If you are a U.S. person and a requester gives you a form other than Form W-9 to request your TIN, you must use the requester's form if it is substantially similar to this Form W-9.

Definition of a U.S. person. For federal tax purposes, you are considered a U.S. person if you are:

- An individual who is a U.S. citizen or U.S. resident alien;
- A partnership, corporation, company, or association created or organized in the United States or under the laws of the United States;
- An estate (other than a foreign estate); or
- A domestic trust (as defined in Regulations section 301.7701-7).

Special rules for partnerships. Partnerships that conduct a trade or business in the United States are generally required to pay a withholding tax under section 1446 on any foreign partners' share of effectively connected taxable income from such business. Further, in certain cases where a Form W-9 has not been received, the rules under section 1446 require a partnership to presume that a partner is a foreign person, and pay the section 1446 withholding tax. Therefore, if you are a U.S. person that is a partner in a partnership conducting a trade or business in the United States, provide Form W-9 to the partnership to establish your U.S. status and avoid section 1446 withholding on your share of partnership income.

In the cases below, the following person must give Form W-9 to the partnership for purposes of establishing its U.S. status and avoiding withholding on its allocable share of net income from the partnership conducting a trade or business in the United States:

- In the case of a disregarded entity with a U.S. owner, the U.S. owner of the disregarded entity and not the entity;
- In the case of a grantor trust with a U.S. grantor or other U.S. owner, generally, the U.S. grantor or other U.S. owner of the grantor trust and not the trust; and
- In the case of a U.S. trust (other than a grantor trust), the U.S. trust (other than a grantor trust) and not the beneficiaries of the trust.

Foreign person. If you are a foreign person or the U.S. branch of a foreign bank that has elected to be treated as a U.S. person, do not use Form W-9. Instead, use the appropriate Form W-8 or Form 8233 (see Publication 515, Withholding of Tax on Nonresident Aliens and Foreign Entities).

Nonresident alien who becomes a resident alien. Generally, only a nonresident alien individual may use the terms of a tax treaty to reduce or eliminate U.S. tax on certain types of income. However, most tax treaties contain a provision known as a "saving clause." Exceptions specified in the saving clause may permit an exemption from tax to continue for certain types of income even after the payee has otherwise become a U.S. resident alien for tax purposes.

If you are a U.S. resident alien who is relying on an exception contained in the saving clause of a tax treaty to claim an exemption from U.S. tax on certain types of income, you must attach a statement to Form W-9 that specifies the following five items:

1. The treaty country. Generally, this must be the same treaty under which you claimed exemption from tax as a nonresident alien.
2. The treaty article addressing the income.
3. The article number (or location) in the tax treaty that contains the saving clause and its exceptions.
4. The type and amount of income that qualifies for the exemption from tax.
5. Sufficient facts to justify the exemption from tax under the terms of the treaty article.

Example. Article 20 of the U.S.-China income tax treaty allows an exemption from tax for scholarship income received by a Chinese student temporarily present in the United States. Under U.S. law, this student will become a resident alien for tax purposes if his or her stay in the United States exceeds 5 calendar years. However, paragraph 2 of the first Protocol to the U.S.-China treaty (dated April 30, 1984) allows the provisions of Article 20 to continue to apply even after the Chinese student becomes a resident alien of the United States. A Chinese student who qualifies for this exception (under paragraph 2 of the first protocol) and is relying on this exception to claim an exemption from tax on his or her scholarship or fellowship income would attach to Form W-9 a statement that includes the information described above to support that exemption.

If you are a nonresident alien or a foreign entity, give the requester the appropriate completed Form W-8 or Form 8233.

Backup Withholding

What is backup withholding? Persons making certain payments to you must under certain conditions withhold and pay to the IRS 28% of such payments. This is called "backup withholding." Payments that may be subject to backup withholding include interest, tax-exempt interest, dividends, broker and barter exchange transactions, rents, royalties, nonemployee pay, payments made in settlement of payment card and third party network transactions, and certain payments from fishing boat operators. Real estate transactions are not subject to backup withholding.

You will not be subject to backup withholding on payments you receive if you give the requester your correct TIN, make the proper certifications, and report all your taxable interest and dividends on your tax return.

Payments you receive will be subject to backup withholding if:

1. You do not furnish your TIN to the requester,
2. You do not certify your TIN when required (see the Part II instructions on page 3 for details),
3. The IRS tells the requester that you furnished an incorrect TIN,
4. The IRS tells you that you are subject to backup withholding because you did not report all your interest and dividends on your tax return (for reportable interest and dividends only), or
5. You do not certify to the requester that you are not subject to backup withholding under 4 above (for reportable interest and dividend accounts opened after 1983 only).

Certain payees and payments are exempt from backup withholding. See *Exempt payee code* on page 3 and the separate Instructions for the Requester of Form W-9 for more information.

Also see *Special rules for partnerships* above.

What is FATCA reporting?

The Foreign Account Tax Compliance Act (FATCA) requires a participating foreign financial institution to report all United States account holders that are specified United States persons. Certain payees are exempt from FATCA reporting. See *Exemption from FATCA reporting code* on page 3 and the Instructions for the Requester of Form W-9 for more information.

Updating Your Information

You must provide updated information to any person to whom you claimed to be an exempt payee if you are no longer an exempt payee and anticipate receiving reportable payments in the future from this person. For example, you may need to provide updated information if you are a C corporation that elects to be an S corporation, or if you no longer are tax exempt. In addition, you must furnish a new Form W-9 if the name or TIN changes for the account; for example, if the grantor of a grantor trust dies.

Penalties

Failure to furnish TIN. If you fail to furnish your correct TIN to a requester, you are subject to a penalty of $50 for each such failure unless your failure is due to reasonable cause and not to willful neglect.

Civil penalty for false information with respect to withholding. If you make a false statement with no reasonable basis that results in no backup withholding, you are subject to a $500 penalty.

Criminal penalty for falsifying information. Willfully falsifying certifications or affirmations may subject you to criminal penalties including fines and/or imprisonment.

Misuse of TINs. If the requester discloses or uses TINs in violation of federal law, the requester may be subject to civil and criminal penalties.

Specific Instructions

Line 1

You must enter one of the following on this line; **do not** leave this line blank. The name should match the name on your tax return.

If this Form W-9 is for a joint account, list first, and then circle, the name of the person or entity whose number you entered in Part I of Form W-9.

a. **Individual.** Generally, enter the name shown on your tax return. If you have changed your last name without informing the Social Security Administration (SSA) of the name change, enter your first name, the last name as shown on your social security card, and your new last name.

Note. ITIN applicant: Enter your individual name as it was entered on your Form W-7 application, line 1a. This should also be the same as the name you entered on the Form 1040/1040A/1040EZ you filed with your application.

b. **Sole proprietor or single-member LLC.** Enter your individual name as shown on your 1040/1040A/1040EZ on line 1. You may enter your business, trade, or "doing business as" (DBA) name on line 2.

c. **Partnership, LLC that is not a single-member LLC, C Corporation, or S Corporation.** Enter the entity's name as shown on the entity's tax return on line 1 and any business, trade, or DBA name on line 2.

d. **Other entities.** Enter your name as shown on required U.S. federal tax documents on line 1. This name should match the name shown on the charter or other legal document creating the entity. You may enter any business, trade, or DBA name on line 2.

e. **Disregarded entity.** For U.S. federal tax purposes, an entity that is disregarded as an entity separate from its owner is treated as a "disregarded entity." See Regulations section 301.7701-2(c)(2)(iii). Enter the owner's name on line 1. The name of the entity entered on line 1 should never be a disregarded entity. The name on line 1 should be the name shown on the income tax return on which the income should be reported. For example, if a foreign LLC that is treated as a disregarded entity for U.S. federal tax purposes has a single owner that is a U.S. person, the U.S. owner's name is required to be provided on line 1. If the direct owner of the entity is also a disregarded entity, enter the first owner that is not disregarded for federal tax purposes. Enter the disregarded entity's name on line 2, "Business name/disregarded entity name." If the owner of the disregarded entity is a foreign person, the owner must complete an appropriate Form W-8 instead of a Form W-9. This is the case even if the foreign person has a U.S. TIN.

Line 2

If you have a business name, trade name, DBA name, or disregarded entity name, you may enter it on line 2.

Line 3

Check the appropriate box in line 3 for the U.S. federal tax classification of the person whose name is entered on line 1. Check only one box in line 3.

Limited Liability Company (LLC). If the name on line 1 is an LLC treated as a partnership for U.S. federal tax purposes, check the "Limited Liability Company" box and enter "P" in the space provided. If the LLC has filed Form 8832 or 2553 to be taxed as a corporation, check the "Limited Liability Company" box and in the space provided enter "C" for C corporation or "S" for S corporation. If it is a single-member LLC that is a disregarded entity, do not check the "Limited Liability Company" box; instead check the first box in line 3 "Individual/sole proprietor or single-member LLC."

Line 4, Exemptions

If you are exempt from backup withholding and/or FATCA reporting, enter in the appropriate space in line 4 any code(s) that may apply to you.

Exempt payee code.

- Generally, individuals (including sole proprietors) are not exempt from backup withholding.
- Except as provided below, corporations are exempt from backup withholding for certain payments, including interest and dividends.
- Corporations are not exempt from backup withholding for payments made in settlement of payment card or third party network transactions.
- Corporations are not exempt from backup withholding with respect to attorneys' fees or gross proceeds paid to attorneys, and corporations that provide medical or health care services are not exempt with respect to payments reportable on Form 1099-MISC.

The following codes identify payees that are exempt from backup withholding. Enter the appropriate code in the space in line 4.

1—An organization exempt from tax under section 501(a), any IRA, or a custodial account under section 403(b)(7) if the account satisfies the requirements of section 401(f)(2)

2—The United States or any of its agencies or instrumentalities

3—A state, the District of Columbia, a U.S. commonwealth or possession, or any of their political subdivisions or instrumentalities

4—A foreign government or any of its political subdivisions, agencies, or instrumentalities

5—A corporation

6—A dealer in securities or commodities required to register in the United States, the District of Columbia, or a U.S. commonwealth or possession

7—A futures commission merchant registered with the Commodity Futures Trading Commission

8—A real estate investment trust

9—An entity registered at all times during the tax year under the Investment Company Act of 1940

10—A common trust fund operated by a bank under section 584(a)

11—A financial institution

12—A middleman known in the investment community as a nominee or custodian

13—A trust exempt from tax under section 664 or described in section 4947

The following chart shows types of payments that may be exempt from backup withholding. The chart applies to the exempt payees listed above, 1 through 13.

IF the payment is for . . .	THEN the payment is exempt for . . .
Interest and dividend payments	All exempt payees except for 7
Broker transactions	Exempt payees 1 through 4 and 6 through 11 and all C corporations. S corporations must not enter an exempt payee code because they are exempt only for sales of noncovered securities acquired prior to 2012.
Barter exchange transactions and patronage dividends	Exempt payees 1 through 4
Payments over $600 required to be reported and direct sales over $5,000[1]	Generally, exempt payees 1 through 5[2]
Payments made in settlement of payment card or third party network transactions	Exempt payees 1 through 4

[1] See Form 1099-MISC, Miscellaneous Income, and its instructions.

[2] However, the following payments made to a corporation and reportable on Form 1099-MISC are not exempt from backup withholding: medical and health care payments, attorneys' fees, gross proceeds paid to an attorney reportable under section 6045(f), and payments for services paid by a federal executive agency.

Exemption from FATCA reporting code. The following codes identify payees that are exempt from reporting under FATCA. These codes apply to persons submitting this form for accounts maintained outside of the United States by certain foreign financial institutions. Therefore, if you are only submitting this form for an account you hold in the United States, you may leave this field blank. Consult with the person requesting this form if you are uncertain if the financial institution is subject to these requirements. A requester may indicate that a code is not required by providing you with a Form W-9 with "Not Applicable" (or any similar indication) written or printed on the line for a FATCA exemption code.

A—An organization exempt from tax under section 501(a) or any individual retirement plan as defined in section 7701(a)(37)

B—The United States or any of its agencies or instrumentalities

C—A state, the District of Columbia, a U.S. commonwealth or possession, or any of their political subdivisions or instrumentalities

D—A corporation the stock of which is regularly traded on one or more established securities markets, as described in Regulations section 1.1472-1(c)(1)(i)

E—A corporation that is a member of the same expanded affiliated group as a corporation described in Regulations section 1.1472-1(c)(1)(i)

F—A dealer in securities, commodities, or derivative financial instruments (including notional principal contracts, futures, forwards, and options) that is registered as such under the laws of the United States or any state

G—A real estate investment trust

H—A regulated investment company as defined in section 851 or an entity registered at all times during the tax year under the Investment Company Act of 1940

I—A common trust fund as defined in section 584(a)

J—A bank as defined in section 581

K—A broker

L—A trust exempt from tax under section 664 or described in section 4947(a)(1)

M—A tax exempt trust under a section 403(b) plan or section 457(g) plan

Note. You may wish to consult with the financial institution requesting this form to determine whether the FATCA code and/or exempt payee code should be completed.

Line 5

Enter your address (number, street, and apartment or suite number). This is where the requester of this Form W-9 will mail your information returns.

Line 6

Enter your city, state, and ZIP code.

Part I. Taxpayer Identification Number (TIN)

Enter your TIN in the appropriate box. If you are a resident alien and you do not have and are not eligible to get an SSN, your TIN is your IRS individual taxpayer identification number (ITIN). Enter it in the social security number box. If you do not have an ITIN, see *How to get a TIN* below.

If you are a sole proprietor and you have an EIN, you may enter either your SSN or EIN. However, the IRS prefers that you use your SSN.

If you are a single-member LLC that is disregarded as an entity separate from its owner (see *Limited Liability Company (LLC)* on this page), enter the owner's SSN (or EIN, if the owner has one). Do not enter the disregarded entity's EIN. If the LLC is classified as a corporation or partnership, enter the entity's EIN.

Note. See the chart on page 4 for further clarification of name and TIN combinations.

How to get a TIN. If you do not have a TIN, apply for one immediately. To apply for an SSN, get Form SS-5, Application for a Social Security Card, from your local SSA office or get this form online at *www.ssa.gov*. You may also get this form by calling 1-800-772-1213. Use Form W-7, Application for IRS Individual Taxpayer Identification Number, to apply for an ITIN, or Form SS-4, Application for Employer Identification Number, to apply for an EIN. You can apply for an EIN online by accessing the IRS website at *www.irs.gov/businesses* and clicking on Employer Identification Number (EIN) under Starting a Business. You can get Forms W-7 and SS-4 from the IRS by visiting IRS.gov or by calling 1-800-TAX-FORM (1-800-829-3676).

If you are asked to complete Form W-9 but do not have a TIN, apply for a TIN and write "Applied For" in the space for the TIN, sign and date the form, and give it to the requester. For interest and dividend payments, and certain payments made with respect to readily tradable instruments, generally you will have 60 days to get a TIN and give it to the requester before you are subject to backup withholding on payments. The 60-day rule does not apply to other types of payments. You will be subject to backup withholding on all such payments until you provide your TIN to the requester.

Note. Entering "Applied For" means that you have already applied for a TIN or that you intend to apply for one soon.

Caution: *A disregarded U.S. entity that has a foreign owner must use the appropriate Form W-8.*

Part II. Certification

To establish to the withholding agent that you are a U.S. person, or resident alien, sign Form W-9. You may be requested to sign by the withholding agent even if items 1, 4, or 5 below indicate otherwise.

For a joint account, only the person whose TIN is shown in Part I should sign (when required). In the case of a disregarded entity, the person identified on line 1 must sign. Exempt payees, see *Exempt payee code* earlier.

Signature requirements. Complete the certification as indicated in items 1 through 5 below.

1. Interest, dividend, and barter exchange accounts opened before 1984 and broker accounts considered active during 1983. You must give your correct TIN, but you do not have to sign the certification.

2. Interest, dividend, broker, and barter exchange accounts opened after 1983 and broker accounts considered inactive during 1983. You must sign the certification or backup withholding will apply. If you are subject to backup withholding and you are merely providing your correct TIN to the requester, you must cross out item 2 in the certification before signing the form.

3. Real estate transactions. You must sign the certification. You may cross out item 2 of the certification.

4. Other payments. You must give your correct TIN, but you do not have to sign the certification unless you have been notified that you have previously given an incorrect TIN. "Other payments" include payments made in the course of the requester's trade or business for rents, royalties, goods (other than bills for merchandise), medical and health care services (including payments to corporations), payments to a nonemployee for services, payments made in settlement of payment card and third party network transactions, payments to certain fishing boat crew members and fishermen, and gross proceeds paid to attorneys (including payments to corporations).

5. Mortgage interest paid by you, acquisition or abandonment of secured property, cancellation of debt, qualified tuition program payments (under section 529), IRA, Coverdell ESA, Archer MSA or HSA contributions or distributions, and pension distributions. You must give your correct TIN, but you do not have to sign the certification.

What Name and Number To Give the Requester

For this type of account:	Give name and SSN of:
1. Individual	The individual
2. Two or more individuals (joint account)	The actual owner of the account or, if combined funds, the first individual on the account[1]
3. Custodian account of a minor (Uniform Gift to Minors Act)	The minor[2]
4. a. The usual revocable savings trust (grantor is also trustee) b. So-called trust account that is not a legal or valid trust under state law	The grantor-trustee[1] The actual owner[1]
5. Sole proprietorship or disregarded entity owned by an individual	The owner[3]
6. Grantor trust filing under Optional Form 1099 Filing Method 1 (see Regulations section 1.671-4(b)(2)(i)(A))	The grantor*
For this type of account:	**Give name and EIN of:**
7. Disregarded entity not owned by an individual	The owner
8. A valid trust, estate, or pension trust	Legal entity[4]
9. Corporation or LLC electing corporate status on Form 8832 or Form 2553	The corporation
10. Association, club, religious, charitable, educational, or other tax-exempt organization	The organization
11. Partnership or multi-member LLC	The partnership
12. A broker or registered nominee	The broker or nominee
13. Account with the Department of Agriculture in the name of a public entity (such as a state or local government, school district, or prison) that receives agricultural program payments	The public entity
14. Grantor trust filing under the Form 1041 Filing Method or the Optional Form 1099 Filing Method 2 (see Regulations section 1.671-4(b)(2)(i)(B))	The trust

[1] List first and circle the name of the person whose number you furnish. If only one person on a joint account has an SSN, that person's number must be furnished.

[2] Circle the minor's name and furnish the minor's SSN.

[3] You must show your individual name and you may also enter your business or DBA name on the "Business name/disregarded entity" name line. You may use either your SSN or EIN (if you have one), but the IRS encourages you to use your SSN.

[4] List first and circle the name of the trust, estate, or pension trust. (Do not furnish the TIN of the personal representative or trustee unless the legal entity itself is not designated in the account title.) Also see *Special rules for partnerships* on page 2.

***Note.** Grantor also must provide a Form W-9 to trustee of trust.

Note. If no name is circled when more than one name is listed, the number will be considered to be that of the first name listed.

Secure Your Tax Records from Identity Theft

Identity theft occurs when someone uses your personal information such as your name, SSN, or other identifying information, without your permission, to commit fraud or other crimes. An identity thief may use your SSN to get a job or may file a tax return using your SSN to receive a refund.

To reduce your risk:

- Protect your SSN,
- Ensure your employer is protecting your SSN, and
- Be careful when choosing a tax preparer.

If your tax records are affected by identity theft and you receive a notice from the IRS, respond right away to the name and phone number printed on the IRS notice or letter.

If your tax records are not currently affected by identity theft but you think you are at risk due to a lost or stolen purse or wallet, questionable credit card activity or credit report, contact the IRS Identity Theft Hotline at 1-800-908-4490 or submit Form 14039.

For more information, see Publication 4535, Identity Theft Prevention and Victim Assistance.

Victims of identity theft who are experiencing economic harm or a system problem, or are seeking help in resolving tax problems that have not been resolved through normal channels, may be eligible for Taxpayer Advocate Service (TAS) assistance. You can reach TAS by calling the TAS toll-free case intake line at 1-877-777-4778 or TTY/TDD 1-800-829-4059.

Protect yourself from suspicious emails or phishing schemes. Phishing is the creation and use of email and websites designed to mimic legitimate business emails and websites. The most common act is sending an email to a user falsely claiming to be an established legitimate enterprise in an attempt to scam the user into surrendering private information that will be used for identity theft.

The IRS does not initiate contacts with taxpayers via emails. Also, the IRS does not request personal detailed information through email or ask taxpayers for the PIN numbers, passwords, or similar secret access information for their credit card, bank, or other financial accounts.

If you receive an unsolicited email claiming to be from the IRS, forward this message to *phishing@irs.gov.* You may also report misuse of the IRS name, logo, or other IRS property to the Treasury Inspector General for Tax Administration (TIGTA) at 1-800-366-4484. You can forward suspicious emails to the Federal Trade Commission at: *spam@uce.gov* or contact them at *www.ftc.gov/idtheft* or 1-877-IDTHEFT (1-877-438-4338).

Visit IRS.gov to learn more about identity theft and how to reduce your risk.

Privacy Act Notice

Section 6109 of the Internal Revenue Code requires you to provide your correct TIN to persons (including federal agencies) who are required to file information returns with the IRS to report interest, dividends, or certain other income paid to you; mortgage interest you paid; the acquisition or abandonment of secured property; the cancellation of debt; or contributions you made to an IRA, Archer MSA, or HSA. The person collecting this form uses the information on the form to file information returns with the IRS, reporting the above information. Routine uses of this information include giving it to the Department of Justice for civil and criminal litigation and to cities, states, the District of Columbia, and U.S. commonwealths and possessions for use in administering their laws. The information also may be disclosed to other countries under a treaty, to federal and state agencies to enforce civil and criminal laws, or to federal law enforcement and intelligence agencies to combat terrorism. You must provide your TIN whether or not you are required to file a tax return. Under section 3406, payers must generally withhold a percentage of taxable interest, dividend, and certain other payments to a payee who does not give a TIN to the payer. Certain penalties may also apply for providing false or fraudulent information.

CITY OF EL PASO PURCHASING & STRATEGIC SOURCING DEPARTMENT
VENDOR INFORMATION FORM
This form must be accompanied by an IRS Form W-9 and Conflict of Interest Questionnaire

City Department:_____ Telephone #_____ Name:_____
Request:
___ Add ___ Update __ Inactivate
___ Vendor ___ Contractual Employee ___ City of El Paso Employee
Vendor Sales Address: If same as W-9 check box ☐
Company Name: _____

Street:_____

City:_____State_____Zip Code_____

Contact Name & Title:_____

Telephone # (**required**) (____) _____ Fax # (____) _____

E-Mail Address:_____

Web Page:_____

VENDOR STATUS:
(Yes ___) (No ___) Small business concern (Less than 100 employees or less than $1,000,000.00 Annual Receipts)
(Yes ___) (No ___) Disadvantage business concern (At least 51% owned by one or more socially disadvantaged individuals; or, a publicly-owned business at least 51% of the stock owned by one or more of such individuals.) If your company is certified please send us a photo copy. We must have an updated copy of the certificate on file. DBES include (Please mark one:)
(___) Black Americans (____) Hispanic Americans
(___) Native Americans (____) Asian-Pacific Americans
(Yes ___) (No ___) Woman-owned business (At least 51% owned by a woman or women who also control and operate it. "Control" in this context means exercising the power to make policy decisions. "Operate" in this context means being actively involved in the day-to-day management.)
(Yes ___) No ___) Handicapped (At least 51% owned by a person or persons with an orthopedic, hearing, mental or visual impairment which substantially limits one of more of his/hers/their major life activities.)
(Yes ___) No ___) Local business enterprise (At least 51% of which is owned by a resident or residents of El Paso County and the principal place of business is in El Paso County.)
(Yes ___) No ___) Hub (Historically underutilized business) If your company is certified please send us a photo copy. We need to have an updated copy of the certificate on file.

IRS-Withholding required information – Mark one of the following which applies to the type of payment that will be made to the vendor: (Incomplete forms will be returned)

___ Wages (Withholding / Default Class 7)
___ Goods (No Withholding / No Default Class)
___ Settlement / Attorney Proceeds (Withholding / Default Class 14)
___ Medical & Healthcare (Withholding / Default Class 6)
___ Garnishment Vendor (No Withholding / No Default Class)
___ Juror (No Withholding / No Default Class)
___ Services (Withholding / Default Class 7)
___ Rental Property (Withholding / Default Class 1)
___ Stipend (No Withholding / No Default Class)
___ Corporation (No Withholding/ No Default Class)

Contractual Employees or Vendors
- Based on W-9, Individual/Sole Proprietor, Partnership, Limited Liability Company (all LLCs C=Corporation, D=Disregarded Entity, S=Corporation, P=Partnership) are marked as withholding. Corporation is not marked as withholding.
- Vendors for Rent, Medical Services, Attorney Fees are **always** marked as withholding, even if they are a Corporation

City of El Paso Employees (IRS-Withholding not required for the following items)
___Pension ___Refund ___Mileage ___Reimbursement ___Settlement ___Travel Request __Tuition Reimbursement

Send Form To: M. Suky Flores Sr. Office Assistant P - 915-212-1185 F - 915-212-0044 FloresMS@elpasotexas.gov

CONFLICT OF INTEREST QUESTIONNAIRE

FORM CIQ

For vendor doing business with local governmental entity

This questionnaire reflects changes made to the law by H.B. 23, 84th Leg., Regular Session.

This questionnaire is being filed in accordance with Chapter 176, Local Government Code, by a vendor who has a business relationship as defined by Section 176.001(1-a) with a local governmental entity and the vendor meets requirements under Section 176.006(a).

By law this questionnaire must be filed with the records administrator of the local governmental entity not later than the 7th business day after the date the vendor becomes aware of facts that require the statement to be filed. *See* Section 176.006(a-1), Local Government Code.

A vendor commits an offense if the vendor knowingly violates Section 176.006, Local Government Code. An offense under this section is a misdemeanor.

OFFICE USE ONLY

Date Received

1 **Name of vendor who has a business relationship with local governmental entity.**

2 ☐ **Check this box if you are filing an update to a previously filed questionnaire.**

(The law requires that you file an updated completed questionnaire with the appropriate filing authority not later than the 7th business day after the date on which you became aware that the originally filed questionnaire was incomplete or inaccurate.)

3 **Name of local government officer about whom the information in this section is being disclosed.**

_____

Name of Officer

This section (item 3 including subparts A, B, C, & D) must be completed for each officer with whom the vendor has an employment or other business relationship as defined by Section 176.001(1-a), Local Government Code. Attach additional pages to this Form CIQ as necessary.

A. Is the local government officer named in this section receiving or likely to receive taxable income, other than investment income, from the vendor?

☐ Yes ☐ No

B. Is the vendor receiving or likely to receive taxable income, other than investment income, from or at the direction of the local government officer named in this section AND the taxable income is not received from the local governmental entity?

☐ Yes ☐ No

C. Is the filer of this questionnaire employed by a corporation or other business entity with respect to which the local government officer serves as an officer or director, or holds an ownership interest of one percent or more?

☐ Yes ☐ No

D. Describe each employment or business and family relationship with the local government officer named in this section.

4

_____ _____

Signature of vendor doing business with the governmental entity Date

Adopted 8/7/2015

CERTIFICATE OF INTERESTED PARTIES

FORM 1295

Complete Nos. 1 - 4 and 6 if there are interested parties.
Complete Nos. 1, 2, 3, 5, and 6 if there are no interested parties.

OFFICE USE ONLY

1 **Name of business entity filing form, and the city, state and country of the business entity's place of business.**

2 **Name of governmental entity or state agency that is a party to the contract for which the form is being filed.**

3 **Provide the identification number used by the governmental entity or state agency to track or identify the contract, and provide a description of the goods or services to be provided under the contract.**

4 Name of Interested Party	City, State, Country (place of business)	Nature of Interest (check applicable)	
		Controlling	Intermediary

5 **Check only if there is NO Interested Party.** ☐

6 **AFFIDAVIT**

I swear, or affirm, under penalty of perjury, that the above disclosure is true and correct.

_____
Signature of authorized agent of contracting business entity

AFFIX NOTARY STAMP / SEAL ABOVE

Sworn to and subscribed before me, by the said _____, this the _____ day of _____, 20 _____, to certify which, witness my hand and seal of office.

_____ _____ _____
Signature of officer administering oath | Printed name of officer administering oath | Title of officer administering oath

ADD ADDITIONAL PAGES AS NECESSARY

City of El Paso
ACCOUNTS PAYABLE
DIRECT DEPOSIT SIGN-UP FORM

This form is used to collect important information to enroll, update or change your Direct Deposit request. Please complete and return to the Purchasing & Strategic Sourcing Department; see contact information provided below. For assistance, please call 915-212-1185.

Part I – Vendor / Employee Information

Name of Payee (Print) _____

Federal Taxpayer ID Number or Employee KRONOS ID# _____

Address: _____

City, State, and Zip Code _____

Telephone _____

E-mail (Print) _____

Part II – Direct Deposit Information

Action Requested: ☐ Start Direct Deposit ☐ Stop Direct Deposit ☐ Change Direct Deposit

Name of Financial Institution: _____

Routing Number (must be nine digits): _____

Bank Account Number: _____

Account Type: ☐ Checking ☐ Savings

For convenience, you may attach a voided check.
Do not use a deposit slip as some banking institutions do not display the correct routing number on deposit slips.

Part III – Terms and Conditions

I hereby authorize and request the City of El Paso to initiate credit entries and if necessary, a debit entry in accordance with National Automated Clearing House Association (NACHA) rules reversing a credit entry made in error, to my account at the financial institution named. The electronic payment is to remain in effect until withdrawn by written notification to the City of El Paso. Funds that are sent to a closed bank account are returned by the banking institutions within five (5) business days. Re-issued payments will be made when funds are returned to City of El Paso.

Signature _____ **Date** _____

Purchasing & Strategic Sourcing Department
300 N. Campbell, 1st floor – EL PASO TX 79901
Fax 915-212-0044
Email: SilvaML@elpasotexas.gov

FEDERAL LABOR PRACTICES CERTIFICATION

TO BE SUBMITTED BY PRIME CONTRACTOR AND ALL SUBCONTRACTORS

PROJECT: NORTHGATE TRANSFER CENTER AND PARKING GARAGE

SOLICITATION No. 2016-748

EQUAL EMPLOYMENT OPPORTUNITY AUTHORITY

In accordance with Executive Order 11246 (30 F.R. 12319-25), the implementing rules and regulations thereof, and orders of the Secretary of Labor, a Certification regarding Equal Opportunity is required of bidders or prospective contractors and their proposed subcontractors prior to the award of contracts or subcontracts.

This form consolidates all the labor practices the City, by Federal law, must insist its contractors follow. Your signature on this form is a pledge and assurance you have complied with, or will comply with, all terms of these regulations and is a NON-WAIVEABLE PRECONDITION OF AWARD.

CONTRACTOR'S CERTIFICATION

1. Contractor has participated in a previous contract or sub-contract subject to the Equal Opportunity Clause. _____Yes _____No

2. Compliance reports were required to be filed in connection with such previous contract or subcontract.
   _____Yes _____No

3. Contractor has filed all compliance reports required by Executive Order 11246 or by regulations of the Office of Federal Contract Compliance Programs issued pursuant to Title VII of the Civil Rights Act of 1964. _____Yes _____No

   If answer to item 3 is "No" please explain in detail on reverse side of this certification.

4. Dollar amount of proposed contract is $_____.

   Anticipated performance period is _____ ( ) consecutive calendar days.

   Expected total number of employees who will perform the proposed construction is _____.

   Race or ethnic group designation of bidder:

   ____ Black ____ Hispanic ____ Oriental ____ American Indian

   ____ Eskimo ____ Aleut ____ White ____ Pacific Islanders

   ____ Other:_____

_____ _____

Company Name Date

_____ _____

Signature Title

NONSEGREGATED FACILITIES

1. Notice to Prospective Federally-Assisted Construction Contractors

a. A Certification of Nonsegregated Facilities, as required by the May 9, 1967 order (32 F.R. 7439, May 19, 1967) on Elimination of Segregated Facilities, by the Secretary of Labor, must be submitted to the recipient prior to the award of a federally- assisted construction contract exceeding $10,000 which is not exempt from the provisions of the Equal Opportunity clause.

b. Contractors receiving federally-assisted construction contracts exceeding $10,000 which are not exempt from the provisions of the Equal Opportunity Clause will be required to provide for the forwarding of the following notice to prospective subcontractors for supplies and construction contracts where the subcontracts exceed $10,000 and are not exempt from the provisions of the Equal Opportunity clause.

2. Notice to Prospective Subcontractors of Requirement for Certification of Nonsegregated facilities

a. A Certification of Nonsegregated Facilities, as required by the May 9, 1967 order (32 F.R. 7439, May 19, 1967) on Elimination of Segregated Facilities, by the Secretary of Labor, must be submitted to the contractor prior to the award of a contract exceeding $10,000 which is not exempt from the provisions of the Equal Opportunity clause.

b. Contractors receiving subcontract awards exceeding $10,000 which are not exempt from the provisions of the Equal Opportunity clause will be required to provide for the forwarding of this notice to prospective subcontractors for supplies and construction contracts where the subcontracts exceed $10,000 and are not exempt from the provisions of the Equal Opportunity clause.

3. Definition

As used in this certification, the term "segregated facilities" means any waiting rooms, work areas, restrooms and wash rooms, restaurants and other eating areas, time clocks, locker rooms and other storage or dressing areas, parking lots, drinking fountains, recreation or entertainment areas, transportation, and housing facilities provided for employees which are segregated by explicit directive or are in fact segregated on the basis of race, creed, color, or national origin, because of habit, local custom, or otherwise.

CERTIFICATION OF NONSEGREGATED FACILITIES

PROJECT: NORTHGATE TRANSFER CENTER AND PARKING GARAGE

SOLICITATION No. 2016-748

The federally-assisted construction contractor certifies that:

1. He/she does not maintain or provide for his/her employees any segregated facilities at any of his/her establishments, and
2. He/she does not permit his/her employees to perform their services at any location, under his/her control, where segregated facilities are maintained.

The federally-assisted construction contractor certifies further that he/she will not:

1. Maintain or provide for his/her employees any segregated facilities at any of his/her establishments, and that
2. He/she will not permit his/her employees to perform their services at any location, under his/her control, where segregated facilities are maintained.

The federally-assisted construction contractor agrees that a breach of this certification is a violation of the Equal Opportunity clause in this contract.

The federally-assisted construction contractor agrees that (except where he/she has obtained identical certifications from proposed subcontractors for specific time periods) he/she will obtain identical certifications in duplicate from proposed subcontractors prior to the award of Subcontracts exceeding $10,000 which are not exempt from the provisions of the Equal Opportunity clause, and that he/she will retain the duplicate of such certification in his/her files. The contractor will include the original in his/her Bid Package.

_____ _____

Company Name Date

_____ _____

Signature Title

LABOR STANDARDS AND PREVAILING WAGE REQUIREMENTS CERTIFICATION

PROJECT: NORTHGATE TRANSFER CENTER AND PARKING GARAGE

SOLICITATION No. 2016-748

1. The undersigned, having pledged to a contract with the City of El Paso for the construction of the above identified projects, acknowledges that:
   a. The Labor Standards provisions are included in the aforesaid contract;
   b. Correction of any infractions of the aforesaid conditions, including infractions by any of my subcontractors and any lower tier subcontractors, is my responsibility.

2. I certify that:
   a. Neither I nor any firm, partnership or association in which I have substantial interest is designated as an ineligible contractor, by the Comptroller General of the Unites States pursuant to Section 5.6(b) of the Regulations of the Secretary of Labor, Part 5 (29 CFR, Part 5) or pursuant to Section 3 (a) of the Davis-Bacon Act, as amended [40 U.S.C. 276a-2(a)].
   b. No part of the aforementioned contract has been or will be subcontracted to any subcontractor if any firm, corporation, partnership or association in which such subcontractor has substantial interest is designated as an ineligible contractor pursuant to any of the aforementioned regulatory or statutory provisions.

3. I agree to obtain and forward to the aforementioned recipient, the City of El Paso, within ten (10) consecutive calendar days after the execution of any subcontract, including those executed by my subcontractors and any lower tier subcontractors, a Subcontractor's Certification Concerning Labor Standards and Prevailing Wage Requirements executed by the subcontractors.

4. I certify that:
   a. The legal name and the business address of the undersigned are:

      _____

      _____

   b. The undersigned is a:

      ☐ A Single Proprietorship ☐ A Corporation ☐ A Limited Partnership

      ☐ A Joint Venture ☐ Other:_____

      Organized in the County of _____, State of _____.
      (Name of State)

LABOR STANDARDS AND PREVAILING WAGE REQUIREMENTS CERTIFICATION, cont.

PROJECT: NORTHGATE TRANSFER CENTER AND PARKING GARAGE

SOLICITATION No. 2016-748

c. The name, title and address of the owner, partner, or officers of the undersigned are:

NAME TITLE ADDRESS

_____

_____

d. The names and address of all other persons, both natural and corporate, having a substantial interest in the undersigned, and the nature of the interest are:

_____

_____

e. The names, addresses and trade classifications of all other building construction contractors in which the undersigned has a substantial interest are:

NAME ADDRESS TRADE CLASSIFICATION

_____

_____

_____ _____

Company Name Date

_____ _____

Signature Title

EQUAL EMPLOYMENT OPPORTUNITY AGREEMENT FOR PROJECT AREA BUSINESSES AND RESIDENTS

NORTHGATE TRANSFER CENTER AND PARKING GARAGE
SOLICITATION No. 2016-748

[I PLEDGE AND AFFIRM THAT I HAVE OR WILL CARRY OUT THE FOLLOWING]:

1. Read all terms, conditions and requirements of the Equal Employment Opportunity Agreement set forth in Section IV-A.

2. Filled in completely all required information on the Section 3 Area Business Needs Form and Self Certification Forms, if applicable.

3. Provided for compliance with all conditions listed in this Agreement in a timely manner, including submission to the City of El Paso of an Equal Employment Opportunity Plan for the use of small businesses in the project area.

4. Contractor will not subcontract any work in connection with this project unless he/she first submits EEO Plan as described in Paragraph 3 above.

I HEREBY CERTIFY THAT ALL INFORMATION ABOVE IS TRUE AND COMPLETE TO THE BEST OF MY KNOWLEDGE AND BELIEF, AND FURTHER BIND MYSELF TO CARRY OUT ALL COMPLIANCE REQUIREMENTS SET FORTH IN THIS CONTRACT.

_____ _____

Company Name Date

_____ _____

Signature Title

W A R N I N G

U.S. Criminal Code, Section 1010, Title 18, U.S.C., provides in part:

"WHOEVER,....MAKES, PASSES, UTTERS OR PUBLISHES ANY STATEMENT, KNOWING THE SAME TO BE FALSE....SHALL BE FINED NOT MORE THAN $5,000 OR IMPRISONED NOT MORE THAN TWO YEARS, OR BOTH."

CERTIFICATION OF PRIMARY PARTICIPANT REGARDING DEBARMENT, SUSPENSION, AND OTHER RESPONSIBILITY MATTERS

TO BE SUBMITTED BY THE PRIME CONTRACTOR

NORTHGATE TRANSFER CENTER AND PARKING GARAGE SOLICITATION No. 2016-748

The Bidder hereby certifies to the best of its knowledge and belief, that it and its principals:

1. Are not presently debarred, suspended, proposed for debarment, declared ineligible, or voluntarily excluded from covered transactions by any Federal department or agency;

2. Have not within a three-year period preceding this proposal been convicted of/or had a civil judgment rendered against them for commission of a fraud or a criminal offense in the connection with obtaining, attempting to obtain, or performing a public (Federal, State or local) transaction or contract under a public transaction; violation of Federal or State antitrust statutes or commission of embezzlement, theft, forgery, bribery, falsification or destruction of records, making false statements, or receiving stolen property;

3. Are not presently indicted for or otherwise criminally or civilly charged by a governmental entity (Federal, State, or local) with commission of any of the offenses enumerated in paragraph (2) of this certification; and

4. Have not within a three-year period preceding this application/proposal had one or more transactions (Federal, State or local) terminated for cause or default.

If the Bidder is unable to certify to any of the statements in this certification, the participant shall attach an explanation to this certification.

THE BIDDER HEREBY CERTIFIES OR AFFIRMS THE TRUTHFULNESS AND ACCURACY OF THE CONTENTS OF THE STATEMENTS SUBMITTED ON OR WITH THIS CERTIFICATION AND UNDERSTANDS THAT THE PROVISIONS OF 31 U.S.C. SECTIONS 3801 ET SEQ, ARE APPLICABLE THERETO.

Signature/Authorized Certifying Official	Typed Name & Title
Contractor/Subcontractor	Date Signed
Federal Identification Number	DUNS Number (**Required**)

(INSTRUCTIONS FOR COMPLIANCE OFFICER – ATTACH COPY OF EPLS TO THIS FORM)

CERTIFICATION OF LOWER-TIER PARTICIPANTS
REGARDING DEBARMENT, SUSPENSION,
AND OTHER INELIGIBILITY AND VOLUNTARY EXCLUSION

TO BE SUBMITTED BY ALL SUBCONTRACTORS

NORTHGATE TRANSFER CENTER AND PARKING GARAGE
SOLICITATION No. 2016-748

_____, certifies, by submission of this proposal, that neither it nor its principals are presently debarred, suspended, proposed for debarment, declared ineligible, or voluntarily excluded from participation in this transaction by any Federal department or agency.

_____, CERTIFIES OR AFFIRMS THE TRUTHFULNESS AND ACCURACY OF THE CONTENTS OF THE STATEMENTS SUBMITTED ON OR WITH THIS CERTIFICATION AND UNDERSTANDS THAT THE PROVISIONS OF 31 U.S.C. SECTIONS 3801 ET SEQ, ARE APPLICABLE THERETO.

If the Lower Tier Participant is unable to certify to any of the statements in this certification, such participant shall attach an explanation to this proposal.

_____ _____
Signature/Authorized Certifying Official Typed Name & Title

_____
Date Signed

_____
Federal Identification Number

(INSTRUCTIONS FOR COMPLIANCE OFFICER – ATTACH COPY OF EPLS TO THIS FORM)

CERTIFICATION REGARDING LOBBYING

Certification for Grants, Loans, and Cooperative Agreements

NORTHGATE TRANSFER CENTER AND PARKING GARAGE
SOLICITATION No. 2016-748

The undersigned certifies, to the best of his or her knowledge and belief, that:

1. No Federal appropriated funds have been paid or will be paid, by or on behalf of the undersigned, to any person for influencing or attempting to influence an officer or employee of any agency, a Member of Congress, an officer or employee of Congress, or an employee of a Member of Congress in connection with the awarding of any Federal contract, the making of any Federal grant, the making of any Federal loan, the entering into of any cooperative agreement, and the extension, continuation, renewal, amendment, or modification of any Federal contract, grant, loan, or cooperative agreement.

2. If any funds other than Federal appropriated funds have been paid or will be paid to any person for influencing or attempting to influence an officer or employee of any agency, a Member of Congress, an Officer or employee of Congress, or an employee of a Member of Congress in connection with the Federal contract, grant, loan or cooperative agreement, the undersigned shall complete and submit Standard Form LLL "Disclosure Form to Report Lobbying" in accordance with its instructions.

3. The undersigned shall require that the language in this certification be included in the award documents for all subawards exceeding $100,000 at all tiers (including subcontracts, subgrants, and contracts under grants, loans, and cooperative agreements) and that all subrecipients shall certify and disclose accordingly.

This certification is a material representation of fact upon which reliance was placed when this transaction was made or entered into. Submission of this certification is a prerequisite for making or entering into this transaction imposed by Section 1352, Title 31, U.S. Code. Any persons who fail to file the required certification shall be subject to a civil penalty of not less than $10,000 and not more than $100,000 for each such failure.

Signature/Authorized Certifying Official	Typed Name & Title
Contractor/Subcontractor	Date Signed

REQUIREMENTS UNDER THE DISADVANTAGED BUSINESS ENTERPRISE PROGRAM (DBE)

2016-748 NORTHGATE TRANSFER CENTER AND PARKING GARAGE

1. **General.** Executive Order 11625 required Federal agencies to develop plans and programs to encourage minority business enterprises. The Department of Transportation (DOT) regulation implementing this mandate is 49 CFR Part 26, participation by Minority Business Enterprise in Department of Transportation Programs. Disadvantage Business Enterprise (DBE) means a small business concern that is owned (at least 51%) and controlled by one or more socially and economically disadvantaged individuals, including, for purposes of this definition, women.

2. **Applicability**. All sponsors are required, as a condition or project approval, to assume certain DBE obligations as set forth in 49 CFR Part 26. In addition, there is passed onto contractors a responsibility to make good faith efforts to meet the DBE participation goals contained in Section I-B.17, Information for Bidders.

3. **Policy.** It is the policy of the FTA that DBEs as defined in 49 CFR Part 26 shall have the maximum opportunity to participate in the performance of contracts financed in whole or in part with Federal funds under this contract. Consequently, the DBE requirements of 49 CFR Part 26 apply to this contract.

4. **DBE Obligation.** The contractor agrees to ensure that DBEs as defined in 49 CFR Part 26 have the maximum opportunity to participate in the performance of contracts and subcontracts financed in whole or in part with Federal funds provided under this contract. In this regard, the contractor shall take all necessary and reasonable steps in accordance with 49 CFR Part 26 to ensure that DBEs have the maximum opportunity to compete for and perform contracts. The contractor shall not discriminate on the basis of race, color, national origin or sex in the award and performance of FTA assisted contracts.

5. Failure to carry out the requirements set forth above shall constitute a breach of contract. After notification, this may result in termination of the contract by the sponsor or such remedy as the sponsor deems appropriate.

I PLEDGE AND AFFIRM THAT I HAVE READ ALL TERMS, CONDITIONS AND REQUIREMENTS REGARDING THE DISADVANTAGED BUSINESS ENTERPRISE PROGRAM AS OUTLINED ABOVE:

Company Name	Date
Signature	Title

LETTER OF INTENT TO PERFORM AS A SUBCONTRACTOR

TO BE SUBMITTED BY ALL DBE SUBCONTRACTORS

2016-748 NORTHGATE TRANSFER CENTER AND PARKING GARAGE

TO: _____
Name of Prime Contractor

PROJECT: _____

SOLICITATION No.: _____

The undersigned intends to perform work in connection with the above project as (check one):

☐ A Single Proprietorship ☐ A Corporation ☐ A Limited Partnership

☐ A Joint Venture ☐ Other:_____

Organized in the County of _____, State of _____.
(Name of State)

The disadvantaged status as a DBE of the undersigned is confirmed in the most current Texas Department of Transportation DBE listing.

The undersigned is prepared to perform the following described work in connection with the above project:

_____

_____

_____

at the following price $_____.

_____% (percent) of the dollar value of the subcontract will be sublet and/or awarded to non-disadvantaged contractors and /or non-disadvantaged suppliers. The undersigned will enter into a formal agreement for the above work with you conditioned upon your execution of a contract with the Sun Metro-Mass Transit Department of The City of El Paso.

_____ _____
Signature/Authorized Certifying Official-Prime Contractor Typed Name & Title

_____ _____
DBE/WBE Subcontractor Date Signed

SCHEDULE OF DBE PARTICIPATION

NORTHGATE TRANSFER CENTER AND PARKING GARAGE

SOLICITATION No. 2016-748

_____
Prime Contractor

ATTACH DBE CERTIFICATES FOR ALL SUBCONTRACTORS LISTED BELOW

Name of DBE Subcontractor	Address	Type of Work	Start/End Dates	Agreed Price	DBE Percentage

NOTE

The undersigned will enter into a formal agreement with Disadvantaged Contractors for work listed in this schedule conditioned upon the execution of a contract with the Sun Metro-Mass Transit Department of The City of El Paso.

_____
Signature/Authorized Certifying Official-Prime Contractor

_____
Typed Name & Title

_____
Date Signed

TO BE SUBMITTED BY THE PRIME CONTRACTOR

THIS FORM MUST BE SUBMITTED WITH BID PROPOSAL

2016-748 NORTHGATE TRANSFER CENTER AND PARKING GARAGE

FAILURE TO SUBMIT THIS CERTIFICATION IN THE SEALED BID WILL BE CAUSE TO DECLARE THE BIDDER NON-RESPONSIVE

BUY AMERICA CERTIFICATE
PROCUREMENT OF STEEL, IRON OR MANUFACTURED PRODUCTS

Certificate of Compliance With 49 U.S.C. 5323 (j) (1)

The Bidder or Offeror hereby certifies that it will comply with the requirements of 49 U.S.C. 5323 (j) (1), and the applicable regulations in 49 CFR part 661.

Company Name _____

Signature _____

Title _____ Date _____

or

Certificate for Non-Compliance with Section 165(a)

The Bidder or Offeror hereby certifies that it cannot comply with the requirements of 49 U.S.C. 5323 (j) (1), but it may qualify for an exception to the requirement pursuant to 49 U.S.C. 5323 (j) (2) (B) or 49 U.S.C. 5323 (j) (2) (D)**.**

Company Name _____

Signature _____

Title _____ Date _____

NORTHGATE TRANSFER CENTER AND PARKING GARAGE

Solicitation No. 2016-748

City of El Paso
Purchasing and Strategic Sourcing Department
300 N. Campbell, 1st Floor
El Paso, Texas

VOLUME 2 OF 3

NOTICE OF CLARIFICATION
PREVAILING WAGE RATES

"BUILDING" and "HEAVY/HIGHWAY" CONSTRUCTION

NORTHGATE TRANSFER CENTER AND PARKING GARAGE
SOLICITATION No. 2016-748

Effective September 24, 2013, City Council passed a resolution adopting the City of El Paso Prevailing Wage Rates for "Building," "Highway" and "Heavy" construction in accordance with Chapter 2258.022(a)(1) of the Texas Government Code.

This Contract contains multiple sets of wage rates:

- **The City of El Paso Building and Heavy/Highway Prevailing Wage Rates applicable to this project**

- **Federal Building and Heavy/Highway Prevailing Wage Rates applicable to this project.**

  Both wage rates remain in effect for this project

  The Building wage decision will apply to all buildings including any construction which connects them.

  The Heavy/Highway wage decision will apply beyond the five (5) foot perimeters of the building(s) to the parking lot and access ramps that lead away from the buildings.

  In the event there is uncertainty as to the proper wage rate the Contract Compliance office will supply clarification.

*****APPRENTICES WILL BE REQUIRED FOR THIS PROJECT*****

CITY OF EL PASO, TEXAS
2012 Building Construction Trades Wage Rates

CLASSIFICATION	BASE WAGE PER HOUR	TOTAL FRINGES PER HOUR	HOURLY PREVAILING WAGE RATE	PER DIEM WAGE RATE
Automatic Fire Sprinkler Fitter, Certified	25.84	16.47	42.31	338.48
Brick masons and Block masons	16.92	-	16.92	135.36
Carpenter – Rough	14.71	-	14.71	117.68
Carpenter – All Other Work	14.85	-	14.85	118.80
Caulker / Sealers	10.00	-	10.00	80.00
Door & Hardware Specialist	12.00	1.35	13.35	106.80
Drywall and Ceiling Tile Installers	12.50	-	12.50	100.00
Drywall Finishers & Tapers	14.00	-	14.00	112.00
Electrician	20.53	7.19	27.72	221.76
Electronic Technician	18.43	1.01	19.44	155.52
Elevator Installers and Repairers	31.35	15.10	46.45	371.60
Fence Erectors	9.50	-	9.50	76.00
Floor Layers–Carpet & Resilient	12.87	-	12.87	102.96
Floor Layers – Specialty	13.00	-	13.00	104.00
Floor Layers – Wood	11.50	-	11.50	92.00
Fork Lift Operator	18.00	5.83	23.83	190.64
Glaziers	10.00	-	10.00	80.00
Hazardous Materials Removal Workers	10.00	-	10.00	80.00
Heating, Air Conditioning and Refrigeration Service Technician	22.00	-	22.00	176.00
Insulation Workers – Mechanical	14.00	-	14.00	112.00
Irrigator – Landscape Certified	14.92	-	14.92	119.36
Laborer, Common	9.88	-	9.88	79.04

CLASSIFICATION	BASE WAGE PER HOUR	TOTAL FRINGES PER HOUR	HOURLY PREVAILING WAGE RATE	PER DIEM WAGE RATE
Laborer, Skilled	13.00	-	13.00	104.00
Man-lift Operator – Include with trade	12.13	-	12.13	97.04
Masons, Cement and Concrete Finishers	13.25	-	13.25	106.00
Mason, Rock	17.97	-	17.97	143.76
Mason, Stone	11.91	-	11.91	95.28
Painters	10.00	-	10.00	80.00
Paper Hanger	10.00	.50	10.50	84.00
Pipe layers	15.00	-	15.00	120.00
Pipe Fitters and Steamfitters	11.43	3.74	15.17	121.36
Plaster and Stucco Applicator	13.00	0.50	13.50	108.00
Plumbers	17.50	-	17.50	140.00
Reinforcing Iron and Rebar Workers	18.38	4.64	23.02	184.16
Roofers	16.00	-	16.00	128.00
Sheet Metal Workers	23.92	-	23.92	191.36
Structural Iron & Steel Workers	17.20	-	17.20	137.60
Tile and Marble Setters	12.50	-	12.50	100.00
Truck Drivers, Heavy and Tractor-Trailer	14.69	-	14.69	117.52
Truck Drivers, Light (under 26,000 GVW)	15.00	-	15.00	120.00

All persons required to be licensed or certified must meet those qualifications to be paid the associated rate.

2012 BUILDING DEFINITIONS

1	**Automatic Fire Sprinkler Fitter, Certified**	Installation, testing, inspecting and certifying of automatic fire suppression systems in any and all types of structures. Sprinkler Fitters specialize in piping associated with fire sprinkler systems. These types of systems are required to be installed and maintained in accordance with strict guidelines, usually National Fire Protection Association (NFPA) Standards, in order to maintain compliance with building and fire codes. Sprinkler Fitters work with a variety of pipe and materials including plastic, copper, steel, cast iron, and ductile iron. The fire suppression piping may contain water, air, antifreeze, fire retardant foam, gas or chemicals for hood systems. Sprinkler systems installed by Sprinkler Fitters can include but not limited to underground supply, standpipes, fire pumps as well as overhead piping systems.
2	**Brickmasons and Blockmasons**	Lay and bind building materials, such as brick, structural tile, concrete block, cinder block, glass block, and terra-cotta block, with mortar and other substances to construct or repair walls, partitions, arches, sewers, and other structures. Exclude "Stonemasons". Classify installers of mortarless segmental concrete masonry wall units in "Landscaping and Grounds-keeping Workers".
3	**Carpenters – Acoustical Ceiling Installation**	Construct, erect, install, or repair the structure for acoustical ceiling tile.
4	**Carpenter – Rough**	Construct, erect, install, or repair structures and fixtures made of wood, such as concrete forms; building frameworks, including partitions, joists, studding, and rafters; wood stairways, window and door frames. May also install cabinets, and siding. Include brattice builders who build doors or brattices (ventilation walls or partitions) in underground passageways to control the proper circulation of air through the passageways.
5	**Carpenter – All Other Work**	Construct, erect, install or repair cabinets and other fixtures or structures requiring a high level of workmanship. Includes Cabinetmakers and Bench Carpenters – Cut, shape, and assemble wooden articles or set up and operate a variety of woodworking machines, such as power saws, jointers, and mortisers to surface, cut or shape lumber or to fabricate parts for wood products**.** Perform related duties such as trim work.
6	**Caulker / Sealers**	Applies water proofing agents or caulk to a variety of structures and materials
7	**Door & Hardware Specialist**	Installs doors, hardware and accessories.
8	**Drywall and Ceiling Tile Installers**	Apply plasterboard or other wallboard to ceilings or interior walls of buildings. Apply or mount acoustical tiles or blocks, strips, or sheets of sound-absorbing materials to ceilings and walls of buildings to reduce or reflect sound. Materials may be of decorative quality. Includes metal stud framing. Exclude "Carpet Installers", "Carpenters – Acoustical Ceiling Installation", and "Tile and Marble Setters".
9	**Drywall Finishers & Tapers**	Seal joints between plasterboard or other wallboard to prepare wall surface for painting or papering.

10	**Electrician**	Plan and execute the layout and installation of electrical conduit, switch panels, buss bars, outlet boxes, electrical wires and cables, lighting standards, lighting fixtures, receptacles, switches, and other electrical devices and apparatus necessary for the complete installation of wiring systems. Includes installation of photovoltaic solar panels.
11	**Electronic Technician**	Set-up, rearrange, or remove switching and dialing equipment used in central offices. Service or repair telephones and other communication equipment on customers' property. May install equipment in new locations or install wiring and telephone jacks in buildings under construction. Install, program, maintain, and repair security and fire alarm wiring and equipment. Ensure that work is in accordance with relevant codes. Exclude "Electricians" who do a broad range of electrical wiring.
12	**Elevator Installers and Repairers**	Assemble, install, repair, or maintain electric or hydraulic freight or passenger elevators, escalators, or dumbwaiters.
13	**Fence Erectors - Include with skilled labor**	Erect and repair metal and wooden fences and fence gates around highways, industrial establishments, residences, or farms, using hand and power tools. Excludes rock & stone fences.
14	**Floor Layers – Carpet and Resilient**	Apply blocks, strips, or sheets of shock-absorbing, sound-deadening, or decorative coverings to floors. Lay and install carpet from rolls, tiles or blocks on floors. Install padding and trim flooring materials. Installs variety of soft floor materials including vinyl and PCP. Exclude wood floors and specialty floors.
15	**Floor Layers - Specialty**	Prepares surface, installs and finishes specialty floor material such as that found in a gymnasium.
16	**Floor Layers - Wood**	Install, scrape and sand wooden floors to smooth surfaces using floor scraper and floor sanding machine, and apply coats of finish.
17	**Fork Lift Operator**	Person certified to operate a fork lift. (Industrial Forklift Operator is in Group 2 in the Heavy Schedule).
18	**Glaziers**	Install glass in windows, skylights, store fronts, and display cases, or on surfaces, such as building fronts, interior walls, ceilings, and tabletops.
19	**Hazardous Materials Removal Workers**	Identify, remove, pack, transport, or dispose of hazardous materials, including asbestos, lead-based paint, waste oil, fuel, transmission fluid, radioactive materials, contaminated soil, etc. Specialized training and certification in hazardous materials handling or a confined entry permit are generally required. May operate earth-moving equipment or trucks. Includes mold.
20	**Heating, Air Conditioning and Refrigeration Service Technician**	Repair and service heating, central air conditioning, or refrigeration systems, including oil burners, hot-air furnaces, and heating stoves. (Installation of systems are performed by sheet metal worker). Includes HVAC mechanic.
21	**Insulation Workers - F1oor, Ceiling, and Wall - Include with trade**	Line and cover structures with insulating materials. May work with batt, roll, or blown insulation materials. May spray material to seal, insulate, or soundproof sections of structure.

22	**Insulation Workers – Mechanical**	Apply insulating materials, adhesive and any other bonding materials to pipes, ductwork, tanks, boilers, expansion tanks, chiller tanks, grease ducts, valves, fittings, roof drains, or other mechanical systems in order to help control temperature.
23	**Irrigator- Landscape, Certified**	Certified to install watering systems in various sizes and grades of lawn in order to maintain sufficient pressure and to insure even dispersal of water.
24	**Laborer, Common**	A general term used on construction work covering many unskilled occupations. Performs unskilled manual duties in all phases of construction. May use tools and other necessary equipment. Does not ordinarily perform work permitting exercise of independent judgment.
25	**Laborer, Skilled**	Performs manual duties in all phases of construction. May use simple tools and other necessary equipment. May assist other workers by performing a variety of duties such as furnishing materials tools and supplies and holding materials or tools during installation. May work on different phases or areas of a project or with different crafts. Is often transferred from job to job. May direct the work of the common laborer. Has the ability to work without close supervision. Degree of independent judgment required varies with the task performed. Includes tenders and hod carriers.
26	**Landscaping and Grounds-keeping Workers – include with Common Labor**	Landscape or maintain grounds of property using hand or power tools or equipment. Workers typically perform a variety of tasks, which may include any combination of the following: sod laying, mowing, trimming, planting, watering, fertilizing, digging, raking, sprinkler repair, and installation of mortarless segmental concrete masonry wall units.
27	**Lather**	Installs light iron and metal furring such as rods, channels, and other bars or systems to which metal lath, rock lath, or other materials used as a substitute for lath are to be attached. Installs metal lath, rock lath, and other materials used as a substitute for lath. Installs metal plastering accessories such as corner beads, door and window casing beads, metal picture mold, chair rails, and other metals plastering accessories which are covered and/or serve as ground or guard.
28	**Locksmith**	Self explanatory.
29	**Manlift Operator - Include with trade**	Self-explanatory.
30	**Masons, Cement and Concrete Finishers**	Smooth and finish surfaces of poured concrete, such as floors, walks, sidewalks, roads, or curbs using a variety of hand and power tools. Align forms for sidewalks, curbs, or gutters; patch voids; use saws to cut expansion joints. Classify installers of mortarless segmental concrete masonry wall units in "Landscaping and Groundskeeping Workers".
31	**Mason, Rock**	Constructs partitions, fences, walks, etc., using rock. Cutting, grouting and pointing of materials listed above which is necessary shall be part of this classification. May also build or repair rock retaining walls. cutting or placing of rock in mortar or other similar material.

32	**Mason, Stone**	Constructs partitions, fences, walks, fireplaces, chimneys, smokestacks, etc., using stone, marble, granite, slate and artificial stone. Cutting, grouting, and pointing of materials listed above which is necessary shall be part of this classification. May also build or repair stone retaining wall, cutting or placing of stone in mortar or other similar material.
33	**Mechanic**	Maintains and repairs construction tools and equipment.
34	**Medical Gas Installer, Certified**	Assemble, install, alter, and repair pipelines or pipe systems that carry medical gases or liquids. Specialized training and certification required.
35	**Metal Building Erector**	Assembles prefabricated metal buildings according to blueprint specification, using hand tools, power tools, and hoisting equipment. Erects frame of building, using hoist. Bolts steel frame members together. Attaches wire and insulating materials to framework. Bolts sheet metal panels to framework. Reads blueprint to determine location of items, such as doors, windows, ventilators, and skylights and installs items, using cutting torch, wrenches, and power drill. Trims excess sheet metal, using cutting torch, power saw, and tin snips.
36	**Millwright**	Self-explanatory.
37	**Painters - Building**	Paint walls, equipment, buildings, bridges, and other structural surfaces, using brushes, rollers, and spray guns. May remove old paint to prepare surface prior to painting. May mix colors or oils to obtain desired color or consistency. Exclude "Paperhangers."
38	**Paper Hanger**	Measures, cuts, and hangs wallpaper.
39	**Pipelayers**	Lay pipe for storm or sanitation sewers, drains, and water mains. Perform any combination of the following tasks: grade trenches or culverts, position pipe, or seal joints.
40	**Pipe Fitters and Steamfitters**	Assemble, install, alter, and repair pipelines or pipe systems that carry water, steam, air, or other liquids or gases. May install heating and cooling equipment and mechanical control systems. Includes pressurized lines and flow lines for gas, air, and oil found in industrial settings. Includes persons, not certified, who install fire sprinklers.
41	**Plaster and Stucco Applicator**	Apply interior or exterior plaster, cement, stucco, or similar materials. May also set ornamental plaster. Applies interior and exterior plastering of stone imitation or any patented materials when cast. Applies acoustical plaster or materials used as substitutes for acoustical plaster, as well as the preparatory pointing and taping of drywall surfaces to receive these finishes. Applies scratch and brown coats on walls and ceilings where tile, mosaic or terrazzo is to be applied. Molds and sets ornamental plaster and trim and runs ornamental plaster cornice and molding. Installs metal corner beads when stuck by using plastic materials.
42	**Plumbers**	Assemble, install, alter, and repair pipelines or pipe systems that carry water, steam, air, or other liquids or gases. May install heating and cooling equipment and mechanical control systems.
43	**Reinforcing Iron and Rebar Workers**	Position and secure steel bars or mesh in concrete forms in order to reinforce concrete. Includes post-tensioning. Use a variety of fasteners, rod-bending machines, blowtorches, and hand tools. Include rod busters.

44	**Roofers**	Cover roofs of structures with shingles, tile, slate, asphalt, aluminum, wood, metal and related materials. May spray roofs, sidings, and walls with material to bind or seal sections of structures. Includes metal and membrane roofs.
45	**Sheet Metal Workers**	Fabricate, assemble, install, and repair sheet metal products and equipment, such as ducts, control boxes, drainpipes, architectural sheet metal, and furnace casings. Work may involve any of the following: setting up and operating fabricating machines to cut, bend, and straighten sheet metal; shaping metal over anvils, blocks, or forms using hammer; operating soldering and welding equipment to join sheet metal parts; inspecting, assembling, and smoothing seams and joints of burred surfaces. Include sheet metal duct installers who install prefabricated sheet metal ducts used for heating, air conditioning, or other purposes.
46	**Structural Iron and Steel Workers**	Raise, place, and unite iron or steel girders, columns, and other structural members to form completed structures or structural frameworks. May erect metal storage tanks and assemble prefabricated metal buildings. Exclude "Reinforcing Iron and Rebar Workers".
47	**Tile and Marble Setters**	Apply hard tile and marble to walls, floors, and ceilings. Includes Terrazzo.
48	**Truck Drivers, Heavy and Tractor-Trailer (Greater than 26,000 GVW)**	Drive a tractor-trailer combination or a truck with a capacity of at least 26,000 GVW, to transport and deliver goods, livestock, or materials in liquid, loose, or packaged form. May be required to unload truck. May require use of automated routing equipment. Requires commercial drivers' license.
49	**53-3033.00 - Truck Drivers, Light or (Under 26,000 GVW)**	Drive a truck or van with a capacity of under 26,000 GVW, primarily to deliver or pick up merchandise or to deliver packages within a specified area. May require use of automatic routing or location software. May load and unload truck. Exclude "Couriers and Messengers".

- **Welder -** Receives rate prescribed for craft performing operation to which welding is incidental.

CITY OF EL PASO, TEXAS
2012 Paving and Street Construction, Dirt Work, Heavy Construction, Pipeline Work, Highway Wage Rates

CLASSIFICATION	BASE WAGE PER HOUR	TOTAL FRINGES PER HOUR	HOURLY PREVAILING WAGE RATE	PER DIEM WAGE RATE
Asphalt Distributor Operator	12.75	-	12.75	102.00
Asphalt Paving Machine Operator	12.50	-	12.50	100.00
Asphalt Raker	10.50	-	10.50	84.00
Backhoe Operator	14.00	-	14.00	112.00
Concrete Finisher (Paving and Structures)	12.00	-	12.00	96.00
Crane Operator, Lattice Boom	17.50	-	17.50	140.00
Crane Operator, Hydraulic	17.00	-	17.00	136.00
Electrician	23.09	-	23.09	184.72
Excavator Operator	16.10	-	16.10	128.80
Form Builder/Setter	13.00	-	13.00	104.00
Form Setter (Paving and Curb)	10.75	-	10.75	86.00
Front End Loader	12.00	-	12.00	96.00
Laborer (Common)	9.00	-	9.00	72.00
Laborer (Skilled)	10.00	-	10.00	80.00
Mechanic	17.50	-	17.50	140.00
Motor Grader Operator	17.00	-	17.00	136.00
Pipe Layer	11.50	-	11.50	92.00
Reinforcing Steel Setter (Paving)	14.00	-	14.00	112.00
Rock Mason	12.00	-	12.00	96.00
Servicer	12.00	-	12.00	96.00

Traveling Mixer Operator	10.00	-	10.00	80.00
CLASSIFICATION	**BASE WAGE PER HOUR**	**TOTAL FRINGES PER HOUR**	**HOURLY PREVAILING WAGE RATE**	**PER DIEM WAGE RATE**
Truck Driver, Single Axle	10.50	-	10.50	84.00
Truck Driver, Tandem Axle	12.74	-	12.74	101.92
Tunneling Machine Operator	13.61	-	13.61	108.88
Utility Operator Grade 1	11.50	-	11.50	92.00
Utility Operator Grade 2	11.00	-	11.00	88.00
Welder, Certified/Structural Steel Welder	12.02	-	12.02	96.16
Welder	13.54	-	13.54	108.32

All persons required to be licensed or certified must meet those qualifications to be paid the associated rate.

2012 HEAVY / HIGHWAY DEFINITIONS

1	**Asphalt Distributor Operator**	Drives distributor truck, sets spray bars and operates valves and levers to control distribution of bituminous material for highway surfacing. May oil, grease or otherwise services and make adjustments to equipment as needed. Performs other related duties.
2	**Asphalt Paving Machine Operator**	Operates paving machine that spreads and levels asphaltic concrete on highway. Controls movement of machine, raises and lowers screed, regulates width of screed. May oil, grease, service and make adjustments to equipment as needed. Performs other related duties.
3	**Asphalt Raker**	Distributes asphaltic materials evenly over road surface by hand-raking and brushing material to correct thickness; may control screed to regulate width and depth of materials; directs Laborers (skilled and unskilled) when to add or take away material to fill low spots or to reduce high spots.
4	**Backhoe Operator**	Operates a rubber-tired machine mounted with a backhoe bucket on one end and a loader bucket on the other end. Used for excavating ditches and structures, laying pipe and precast concrete structures, carrying material in the loader bucket, and general excavation and backfill. May also be equipped with hydraulic attachments. May oil, grease or otherwise service and make necessary adjustments to equipment as needed. Performs other related duties.
5	**Communications Cable Installer**	Installs communication cable under direction of telecommunication technician including optical fiber and cable carrying less than 50 volts AC. Operates equipment associated with cable installation. Performs other related duties.
6	**Concrete Finisher (Paving and Structures)**	Finishes the exposed surfaces of fresh concrete paving, median barrier and every element of concrete structures. Operates bridge deck finishing machine. Forms and finishes edges and joints. Finishes all concrete flatwork, including concrete paving, curbs, driveways, sidewalks, riprap, and gutters. Finishes exposed surface of concrete after forms have been removed by patching imperfections with fresh concrete, rubbing surface with abrasive stone, and directing others in removing excess or defective concrete with power tools. Performs other related duties.
7	**Crane Operator, Lattice Boom:**	A worker who operates a lattice boom type crane to hoist and move materials, raise and lower heavy weights and perform other related operations. May be crawler type or rubber tired. May include placement of rock riprap, clamshell, dragline, pipe and pile driving operations. May oil, grease or otherwise service and make necessary adjustments to equipment as needed. Performs other related duties.
8	**Crane Operator, Hydraulic**	A worker who operates a hydraulic telescoping boom type crane to hoist and move materials, raise and lower heavy weights and perform other related operations. May be crawler type or rubber-tired. May oil, grease or otherwise service and make necessary adjustments to equipment as needed. Performs other related duties.

9	**Directional Drilling Locator**	Assist directional drilling operator in machine setup. Operates locating equipment under direction of the operator. May oil, grease or otherwise service or make necessary adjustments to equipment as needed. Performs other related duties.
10	**Electrician**	Plan and execute the layout and installation of electrical conduit, switch panels, buss bars, outlet boxes, electrical wires and cables, lighting standards, lighting fixtures, receptacles, switches, and other electrical devices and apparatus necessary for the complete installation of wiring systems, works on overhead distribution systems and underground distribution systems.. Includes installation of photovoltaic solar panels.
11	**Excavator Operator**	Operates a crawler or rubber-tired machine mounted with an excavator bucket. Used for excavating ditches and structures, laying pipe and precast concrete structures, loading trucks and placing rock riprap. May also be equipped with various hydraulic attachments. May oil, grease or otherwise service and make necessary adjustments to equipment as needed. Performs other related duties.
12	**Form Builder/Setter**	Works from plans to build, assemble, fit together, align, plumb, and set in place forms for molding concrete structures. Forms may be wood, steel, aluminum, fiberglass or any other type of material. Checks forms while concrete is being placed. Directs others in stripping forms after concrete is placed. May install miscellaneous materials integral to concrete structures. May set precast concrete elements. Prepares for slipforming traffic rail and median barrier. May install permanent metal deck forms. May work with power tools. Performs other related duties. Includes guardrail installation.
13	**Form Setter (Paving and Curb)**	Fits together, aligns and sets to grade metal and wooden forms for placement of all concrete flatwork, including concrete paving, curbs, driveways, sidewalks, and riprap. Works with survey crew to set stringline for paving, curb and gutter and curb. Performs other related duties.
14	**Front End Loader**	Operates a rubber-tired, skid steer or crawler type tractor with an attached scoop type bucket on front end. Machine is used to load materials from stockpiles, excavation, charging batch plants, loading and unloading trucks. May be used with attachments in lieu of the bucket. May oil, grease or otherwise service and make necessary adjustments to equipment as needed. Performs other related duties.
15	**Instrument Person**	Sets up, adjusts and operates surveying instruments, including GPS and total station. Works from plans to establish lines points and grades for construction purposes, keeps notes and records of data. Computes cross sections of work performed for cost or payment purposes. Directs Rod or Chain person (skilled labor) and is responsible for accuracy of this field engineering work. Performs other related duties.
16	**Insulation Workers – Mechanical**	Apply insulating materials to pipes or ductwork, or other mechanical systems in order to help control temperature on a highway project.

17	**Laborer (Common)**	A general term used on construction work covering many unskilled classifications requiring work of a physical nature. Performs a variety of work ranging from pick and shovel work to cleaning up lumber with hammer, shoveling and placing concrete, uses air tools, cleans concrete joints and fills joints with sealing compound from bucket or with hose and nozzle from a central source, applies coating of oil to inside face of forms, may help set and strip forms, unloads and transports reinforcing settle, cures newly poured concrete, helps lower pipe in ditch for pipelayers, works with dirt crew keeping construction layout stakes out of the way of dirt-moving equipment. May fine grade excavation and ditches, shovels hot asphalt material. May use power tools and other necessary equipment in demolition work. Does not ordinarily perform work permitting exercise of independent judgment or without close direction by other workers. Installs and maintains erosion control. Performs other related duties. (AGC)-A general term used on construction work covering many unskilled classifications requiring work of a physical nature. A laborer works with all crews doing everything from pick and shovel work to cleaning up lumber with hammer, shoveling and placing concrete, uses air tools, cleans concrete joints and fills joints with sealing compound from bucket or with hose and nozzle from a central source, applies coating of oil to inside face of forms, may help set and strip forms, unloads and transports reinforcing steel, cures newly poured concrete, helps lower pipe into ditch for pipelayers, builds fences, works with dirt crew keeping construction layout stakes out of the way of dirt-moving equipment. May fine grade excavation and ditches, shovels hot asphalt material. May use power tools and other necessary equipment in demolition work. Does not ordinarily perform work permitting exercise of independent judgment or without close direction by other workers. Usually an entry level position as the first step to learn a skill. Performs other related duties.
18	**Laborer (Skilled) (Utility)**	(AGC)-Performs a variety of manual duties, usually working in a utility capacity by working on multiple projects and tasks where demands require workmen with varied experience and ability to work without close direction. Unloads and transports reinforcing steel. May assist in the placement and tying of reinforcing steel. Directs common laborers in pouring concrete. Erects shoring and bracing. Assists in installation of pipe. Installs, operates, maintains dewatering systems. May assist equipment operators in positioning machines, verifying grades and signaling operators to dumping positions to maintain grades as directed. Uses power tools and air tools. May work as lead man in a labor crew. Installs and maintains erosion control. Is more or less a general utility construction worker. May be a second step in learning a skill. Includes Concrete/Gunite Pump Operator, Concrete Saw Operator, Fence Erector, Flagger, and Sign Erector. Performs other related duties.
19	**Mechanic**	(AGC-Same) Assembles, sets up, adjusts and maintains and repairs all types of construction equipment and trucks. May perform the duties of a welder in repair of equipment. Performs other related duties.
20	**Motor Grader Operator, Fine**	Operates motor grader. Performs many of the same duties of Motor Grader, Rough, but in addition performs finish grade work to blue tops or other close specification control. This work is subject to strict inspection and must conform closely to specifications. May oil, grease or otherwise service and make necessary adjustments to equipment as needed. Performs other related duties.

21	**Painter**	Paints and stains structural steel and concrete surfaces of bridges, retaining walls, or other structures. Directs cleaning and abrasive blasting of surfaces prior to painting or staining. Performs other related duties.
22	**Percussion or Rotary Drill Operator**	Operates rock drilling equipment that may be used to break rock. May oil, grease or otherwise service and make necessary adjustments to equipment as needed. Performs other related duties.
23	**Pipe Layer**	Installs concrete, clay, steel, ductile iron, plastic, corrugated pipe and any other type of pipe for storm drainage, water lines, gas lines and sanitary sewer lines. Lays underground communication and electrical ducts. May install and set electrical ground boxes, hand holes, manholes, inlets and other structures. Caulks joints, makes threaded and flanged connections. Installs valves and other accessories. Performs other related duties.
24	**Reinforcing Steel Setter (Paving)/ Reinforcing Steel Worker**	Works from plans to lay out and install reinforcing steel within forms or in mats of concrete paving. May direct unloading of material. Determines rigging required to complete work. Gives direction to reinforcing steel worker apprentice or common or utility laborers. May install miscellaneous materials integral to concrete structures or paving. May work with power tools. Performs other duties.
25	**Reinforcing Steel Setter (Structure)/ Structural Steel Worker**	Erects and places fabricated structural steel members, such as girders, plates, diaphragms, lateral bracing, and unites them permanently to form a completed structural steel unit, including reinforcing members. Fastens steel members together by welding or bolting. May include dismantling and erecting large units of equipment. Performs other related duties.
26	**Rock Mason**	Constructs partitions, fences, walks, etc., using rock. Cutting, grouting and pointing of materials listed above which is necessary shall be part of this classification. May also build or repair rock retaining walls, cutting or placing of rock in mortar or other similar material.
27	**Servicer**	Drives a truck which carries various fuels, oils, greases and filters. Must have knowledge of and is responsible for the correct oiling and greasing and changing of filters on equipment according to manufacturers' specifications. Uses compressed air grease guns, wrenches and other tools. May make adjustments to clutches, brakes and other mechanical items. Keeps record of service for preventive maintenance records. May have laborer assisting him. May require a Commercial Driver's License if driving truck on public highways. Performs other related duties.
28	**Traffic Signal/Light Pole Worker**	Sets forms, reinforcing steel, anchor bolts and pours/finishes concrete for traffic signal and light pole foundations. Assembles, erects, and plumbs traffic signal and light pole structures by bolting and other means. Installs signal spans, signal heads, signal detection, and lights on equipment. Installs cabling and wiring in signal and light poles, on signal and light spans and underground raceway systems. Properly identifies and terminates cables and wiring to appropriate equipment. Installs signal controllers and service equipment. Tests and troubleshoots system for proper operation. Performs other related duties.

29	**Telecommunication Technician**	Installs and troubleshoots communication equipment including cabling for the transmission of communication circuits. Terminates and tests communication circuits including video, voice and data. Installs communication equipment in buildings, outdoor cabinets and pole mounted installations. Installs, terminates and tests optical fiber cables as well as copper communication cable carrying less than 50 volts AC. Performs other related duties.
30	**Traveling Mixer Operator**	Operates a machine that pulverizes material of the roadbed and may mechanically mix it with asphalt, cement or other stabilizing materials. May oil, grease or otherwise service and make necessary adjustments to equipment as needed. Performs other related duties.
31	**Truck Driver, Single Axle**	Drives a light capacity truck for transporting loads of construction material. The truck is of single rear axle type, may have various kinds of beds attached such as dump, flat bed, tank, etc. May require CDL license for driving on highway. May service and make necessary adjustments for proper operation of equipment. Performs other related duties.
32	**Truck Driver, Tandem Axle**	Drives a tandem axle powered tractor. Hauls dirt, rock, aggregates or other material. May require CDL license for driving on highway. May service and make necessary adjustments for proper operation of equipment. Performs other related duties.
33	**Tunneling Machine Operator**	Operates a machine which creates a tunnel through dirt or rock for the purpose of installing subterranean facilities such as utilities, including sanitary sewer and water mains, storm sewers, pedestrian tunnels, vehicular tunnels and subways. The tunneling machine excavates tunnels greater than 2,500 feet in continuous length. Sets up machine to line and grade. Checks grade during tunneling operation. May oil, grease or otherwise service and make necessary adjustments to equipment as needed. Performs other related duties.
34	**Utility Operator Grade 1**	Clam, ditching machine, side booms (except those in Grade 2), operator on dredges, cleaning machine, coating machine, back filler, blending machine, water-kote machine, equipment welder, track tractor, derrick, dragline, shovel, motor grader rough grade, Crawler tractor, foundation drill operator (crawler and truck mounted), and pile driver.
35	**Utility Operator Grade 2**	Pipe, boom truck or winch truck with poles when used for hoisting, side boom (cradling rock drill), tow tractor, farm tractor road boring machine, fork lift (industrial type), pot fireman (power agitated), straightening machine, boring machine, bombardier (track or tow rig), mobile lubrication & service engineer, hydrostatic testing operator, rollagon or similar type equipment, scraper, stalking machine , roller operator, concrete paving curing, float, texturing machine, subgrade trimmer, slip form machine, milling machine, self propelled sweeping machine, trenching machine, directional drill, chip spreader, screening plant, joint sealer, and concrete saw, off road hauler, pavement marking machine operator, reclaimer/pulverizer operator, slurry seal or micro-surfacing machine operator, self-propelled hammer operator.
36	**Welder, Certified/ Structural Steel Welder**	Certified by the American Welding Society to perform structural steel welding. Operates welding equipment. Welds structural steel girders and diaphragms. May weld permanent metal deck forms. Performs other related duties. Includes pipe work that must be performed by a certified welder.

37	**Welder**	Operates welding equipment. Cuts, lays out, fits and welds metals or alloyed metal parts to fabricate or repair equipment. Welds the joints between lengths of pipe for oil, gas or other types of pipelines. Welds structural steel girders and diaphragms. May assist in welding of permanent metal deck forms. Performs other related duties.

General Decision Number: TX160295 03/18/2016 TX295

Superseded General Decision Number: TX20150295

State: Texas

Construction Type: Building

County: El Paso County in Texas.

BUILDING CONSTRUCTION PROJECTS (does not include single family homes or apartments up to and including 4 stories).

Note: Under Executive Order (EO) 13658, an hourly minimum wage of $10.15 for calendar year 2016 applies to all contracts subject to the Davis-Bacon Act for which the solicitation was issued on or after January 1, 2015. If this contract is covered by the EO, the contractor must pay all workers in any classification listed on this wage determination at least $10.15 (or the applicable wage rate listed on this wage determination, if it is higher) for all hours spent performing on the contract in calendar year 2016. The EO minimum wage rate will be adjusted annually. Additional information on contractor requirements and worker protections under the EO is available at www.dol.gov/whd/govcontracts.

Modification Number	Publication Date
0	01/08/2016
1	03/18/2016

BOIL0074-003 01/01/2014

	Rates	Fringes
BOILERMAKER	$ 23.14	21.55

ELEC0583-001 12/01/2014

	Rates	Fringes
ELECTRICIAN (Excludes Low Voltage Wiring and Installation of Alarms/HVAC Temperature Controls)	$ 21.56	5.25% + $6.65

ENGI0178-005 06/01/2014

	Rates	Fringes
POWER EQUIPMENT OPERATOR		
(1) Tower Crane	$ 29.00	10.60
(2) Cranes with Pile Driving or Caisson Attachment and Hydraulic Crane 60 tons and above	$ 28.75	10.60
(3) Hydraulic cranes 59		

```
     Tons and under.............$ 27.50           10.60
-------------------------------------------------------------------
 IRON0084-011 06/01/2015

                                   Rates          Fringes

IRONWORKER, ORNAMENTAL.....$ 23.02              6.35
-------------------------------------------------------------------
 PLUM0412-001 04/01/2013

                                   Rates          Fringes

PLUMBER (Including HVAC Pipe
Installation)..................$ 31.14           12.43
-------------------------------------------------------------------
* SFTX0669-002 01/01/2016

                                   Rates          Fringes

SPRINKLER FITTER (Fire
Sprinklers).....................$ 27.43           22.52
-------------------------------------------------------------------
  SUTX2014-021 07/21/2014

                                   Rates          Fringes

BRICKLAYER.....................$ 16.17             0.00

CARPENTER (Drywall
Finishing/Taping Only).....$ 12.81             0.00

CARPENTER, Excludes Drywall
Finishing/Taping, Drywall
Hanging, Form Work and Metal
Stud Installation..............$ 13.51             3.29

CEMENT MASON/CONCRETE FINISHER...$ 13.02             0.00

DRYWALL HANGER AND METAL STUD
INSTALLER.....................$ 12.81             0.00

ELECTRICIAN (Alarm
Installation Only).............$ 15.38             2.92

ELECTRICIAN (HVAC/Temperature
Controls Installation Only)......$ 19.09             6.45

ELECTRICIAN (Low Voltage
Wiring Only)...................$ 15.38             2.92

FENCE ERECTOR..................$  9.93             1.83

FLOOR LAYER:  Carpet...........$ 12.81             0.00

FLOOR LAYER:  Vinyl Flooring.....$ 12.87             0.00

FORM WORKER....................$ 12.57             1.03
```

GLAZIER	$ 15.86	1.00
INSULATOR - MECHANICAL (Duct, Pipe & Mechanical System Insulation)	$ 16.91	0.00
IRONWORKER, REINFORCING	$ 15.60	0.00
IRONWORKER, STRUCTURAL	$ 15.37	4.34
LABORER: Common or General	$ 9.30	0.00
LABORER: Driller	$ 14.12	1.01
LABORER: Mason Tender - Brick	$ 12.50	2.30
LABORER: Mason Tender - Cement/Concrete	$ 10.82	0.96
LABORER: Pipelayer	$ 11.00	3.47
LABORER: Roof Tearoff	$ 10.06	0.00
LABORER: Landscape and Irrigation	$ 10.00	0.00
OPERATOR: Backhoe/Excavator/Trackhoe	$ 14.43	0.74
OPERATOR: Bobcat/Skid Steer/Skid Loader	$ 13.93	0.00
OPERATOR: Bulldozer	$ 18.29	1.31
OPERATOR: Drill	$ 16.22	0.34
OPERATOR: Forklift	$ 14.83	0.00
OPERATOR: Grader/Blade	$ 19.50	1.05
OPERATOR: Loader	$ 12.87	0.70
OPERATOR: Mechanic	$ 17.00	0.00
OPERATOR: Paver (Asphalt, Aggregate, and Concrete)	$ 16.03	0.00
OPERATOR: Roller	$ 12.70	0.00
PAINTER (Brush, Roller, and Spray)	$ 12.50	0.00
PIPEFITTER, Excludes HVAC Pipe Installation	$ 18.15	0.98
ROOFER	$ 11.42	0.00

SHEET METAL WORKER (HVAC Duct Installation Only).....$ 23.56 3.60

SHEET METAL WORKER, Excludes HVAC Duct Installation.....$ 21.13 6.53

TILE FINISHER.....$ 11.22 0.00

TILE SETTER.....$ 12.02 0.00

TRUCK DRIVER: Dump Truck.....$ 12.39 1.18

TRUCK DRIVER: Flatbed Truck.....$ 19.65 8.57

TRUCK DRIVER: Semi-Trailer Truck.....$ 12.50 0.00

TRUCK DRIVER: Water Truck.....$ 12.00 4.11

WELDERS - Receive rate prescribed for craft performing operation to which welding is incidental.

==========

Unlisted classifications needed for work not included within the scope of the classifications listed may be added after award only as provided in the labor standards contract clauses (29CFR 5.5 (a) (1) (ii)).

The body of each wage determination lists the classification and wage rates that have been found to be prevailing for the cited type(s) of construction in the area covered by the wage determination. The classifications are listed in alphabetical order of "identifiers" that indicate whether the particular rate is a union rate (current union negotiated rate for local), a survey rate (weighted average rate) or a union average rate (weighted union average rate).

Union Rate Identifiers

A four letter classification abbreviation identifier enclosed in dotted lines beginning with characters other than "SU" or "UAVG" denotes that the union classification and rate were prevailing for that classification in the survey. Example: PLUM0198-005 07/01/2014. PLUM is an abbreviation identifier of the union which prevailed in the survey for this classification, which in this example would be Plumbers. 0198 indicates the local union number or district council number where applicable, i.e., Plumbers Local 0198. The next number, 005 in the example, is an internal number used in processing

the wage determination. 07/01/2014 is the effective date of the most current negotiated rate, which in this example is July 1, 2014.

Union prevailing wage rates are updated to reflect all rate changes in the collective bargaining agreement (CBA) governing this classification and rate.

Survey Rate Identifiers

Classifications listed under the "SU" identifier indicate that no one rate prevailed for this classification in the survey and the published rate is derived by computing a weighted average rate based on all the rates reported in the survey for that classification. As this weighted average rate includes all rates reported in the survey, it may include both union and non-union rates. Example: SULA2012-007 5/13/2014. SU indicates the rates are survey rates based on a weighted average calculation of rates and are not majority rates. LA indicates the State of Louisiana. 2012 is the year of survey on which these classifications and rates are based. The next number, 007 in the example, is an internal number used in producing the wage determination. 5/13/2014 indicates the survey completion date for the classifications and rates under that identifier.

Survey wage rates are not updated and remain in effect until a new survey is conducted.

Union Average Rate Identifiers

Classification(s) listed under the UAVG identifier indicate that no single majority rate prevailed for those classifications; however, 100% of the data reported for the classifications was union data. EXAMPLE: UAVG-OH-0010 08/29/2014. UAVG indicates that the rate is a weighted union average rate. OH indicates the state. The next number, 0010 in the example, is an internal number used in producing the wage determination. 08/29/2014 indicates the survey completion date for the classifications and rates under that identifier.

A UAVG rate will be updated once a year, usually in January of each year, to reflect a weighted average of the current negotiated/CBA rate of the union locals from which the rate is based.

WAGE DETERMINATION APPEALS PROCESS

1.) Has there been an initial decision in the matter? This can be:

* an existing published wage determination
* a survey underlying a wage determination
* a Wage and Hour Division letter setting forth a position on

a wage determination matter
* a conformance (additional classification and rate) ruling

On survey related matters, initial contact, including requests for summaries of surveys, should be with the Wage and Hour Regional Office for the area in which the survey was conducted because those Regional Offices have responsibility for the Davis-Bacon survey program. If the response from this initial contact is not satisfactory, then the process described in 2.) and 3.) should be followed.

With regard to any other matter not yet ripe for the formal process described here, initial contact should be with the Branch of Construction Wage Determinations. Write to:

Branch of Construction Wage Determinations
Wage and Hour Division
U.S. Department of Labor
200 Constitution Avenue, N.W.
Washington, DC 20210

2.) If the answer to the question in 1.) is yes, then an interested party (those affected by the action) can request review and reconsideration from the Wage and Hour Administrator (See 29 CFR Part 1.8 and 29 CFR Part 7). Write to:

Wage and Hour Administrator
U.S. Department of Labor
200 Constitution Avenue, N.W.
Washington, DC 20210

The request should be accompanied by a full statement of the interested party's position and by any information (wage payment data, project description, area practice material, etc.) that the requestor considers relevant to the issue.

3.) If the decision of the Administrator is not favorable, an interested party may appeal directly to the Administrative Review Board (formerly the Wage Appeals Board). Write to:

Administrative Review Board
U.S. Department of Labor
200 Constitution Avenue, N.W.
Washington, DC 20210

4.) All decisions by the Administrative Review Board are final.

==========

END OF GENERAL DECISION

General Decision Number: TX160034 01/08/2016 TX34

Superseded General Decision Number: TX20150034

State: Texas

Construction Type: Highway

County: El Paso County in Texas.

HIGHWAY CONSTRUCTION PROJECTS (excluding tunnels, building structures in rest area projects & railroad construction; bascule, suspension & spandrel arch bridges designed for commercial navigation, bridges involving marine construction; and other major bridges).

Note: Under Executive Order (EO) 13658, an hourly minimum wage of $10.15 for calendar year 2016 applies to all contracts subject to the Davis-Bacon Act for which the solicitation was issued on or after January 1, 2015. If this contract is covered by the EO, the contractor must pay all workers in any classification listed on this wage determination at least $10.15 (or the applicable wage rate listed on this wage determination, if it is higher) for all hours spent performing on the contract in calendar year 2016. The EO minimum wage rate will be adjusted annually. Additional information on contractor requirements and worker protections under the EO is available at www.dol.gov/whd/govcontracts.

Modification Number	Publication Date
0	01/08/2016

* SUTX2011-005 08/02/2011

	Rates	Fringes
CEMENT MASON/CONCRETE FINISHER (Paving and Structures)	$ 12.44	
ELECTRICIAN	$ 20.27	
FORM BUILDER/FORM SETTER (Structures)	$ 12.26	
LABORER		
Asphalt Raker	$ 11.44	
Laborer, Common	$ 10.58	
Laborer, Utility	$ 11.33	
Pipelayer	$ 11.37	
POWER EQUIPMENT OPERATOR:		
Asphalt Distributor	$ 13.28	
Asphalt Paving Machine	$ 13.26	
Excavator, 50,000 lbs or less	$ 13.49	

Front End Loader Over 3CY..$ 13.57
Front End Loader 3CY or
less.....$ 13.29
Motor Grader Fine Grade....$ 16.13
Scraper.....$ 11.12

Servicer.....$ 13.44

TRUCK DRIVER
Single Axle.....$ 13.16
Single or Tandem Axle Dump..$ 14.06

WELDER.....$ 13.74

WELDERS - Receive rate prescribed for craft performing operation to which welding is incidental.

==========

Unlisted classifications needed for work not included within the scope of the classifications listed may be added after award only as provided in the labor standards contract clauses (29CFR 5.5 (a) (1) (ii)).

The body of each wage determination lists the classification and wage rates that have been found to be prevailing for the cited type(s) of construction in the area covered by the wage determination. The classifications are listed in alphabetical order of "identifiers" that indicate whether the particular rate is a union rate (current union negotiated rate for local), a survey rate (weighted average rate) or a union average rate (weighted union average rate).

Union Rate Identifiers

A four letter classification abbreviation identifier enclosed in dotted lines beginning with characters other than "SU" or "UAVG" denotes that the union classification and rate were prevailing for that classification in the survey. Example: PLUM0198-005 07/01/2014. PLUM is an abbreviation identifier of the union which prevailed in the survey for this classification, which in this example would be Plumbers. 0198 indicates the local union number or district council number where applicable, i.e., Plumbers Local 0198. The next number, 005 in the example, is an internal number used in processing the wage determination. 07/01/2014 is the effective date of the most current negotiated rate, which in this example is July 1, 2014.

Union prevailing wage rates are updated to reflect all rate changes in the collective bargaining agreement (CBA) governing

this classification and rate.

Survey Rate Identifiers

Classifications listed under the "SU" identifier indicate that no one rate prevailed for this classification in the survey and the published rate is derived by computing a weighted average rate based on all the rates reported in the survey for that classification. As this weighted average rate includes all rates reported in the survey, it may include both union and non-union rates. Example: SULA2012-007 5/13/2014. SU indicates the rates are survey rates based on a weighted average calculation of rates and are not majority rates. LA indicates the State of Louisiana. 2012 is the year of survey on which these classifications and rates are based. The next number, 007 in the example, is an internal number used in producing the wage determination. 5/13/2014 indicates the survey completion date for the classifications and rates under that identifier.

Survey wage rates are not updated and remain in effect until a new survey is conducted.

Union Average Rate Identifiers

Classification(s) listed under the UAVG identifier indicate that no single majority rate prevailed for those classifications; however, 100% of the data reported for the classifications was union data. EXAMPLE: UAVG-OH-0010 08/29/2014. UAVG indicates that the rate is a weighted union average rate. OH indicates the state. The next number, 0010 in the example, is an internal number used in producing the wage determination. 08/29/2014 indicates the survey completion date for the classifications and rates under that identifier.

A UAVG rate will be updated once a year, usually in January of each year, to reflect a weighted average of the current negotiated/CBA rate of the union locals from which the rate is based.

WAGE DETERMINATION APPEALS PROCESS

1.) Has there been an initial decision in the matter? This can be:

* an existing published wage determination
* a survey underlying a wage determination
* a Wage and Hour Division letter setting forth a position on a wage determination matter
* a conformance (additional classification and rate) ruling

On survey related matters, initial contact, including requests for summaries of surveys, should be with the Wage and Hour Regional Office for the area in which the survey was conducted

because those Regional Offices have responsibility for the Davis-Bacon survey program. If the response from this initial contact is not satisfactory, then the process described in 2.) and 3.) should be followed.

With regard to any other matter not yet ripe for the formal process described here, initial contact should be with the Branch of Construction Wage Determinations. Write to:

Branch of Construction Wage Determinations
Wage and Hour Division
U.S. Department of Labor
200 Constitution Avenue, N.W.
Washington, DC 20210

2.) If the answer to the question in 1.) is yes, then an interested party (those affected by the action) can request review and reconsideration from the Wage and Hour Administrator (See 29 CFR Part 1.8 and 29 CFR Part 7). Write to:

Wage and Hour Administrator
U.S. Department of Labor
200 Constitution Avenue, N.W.
Washington, DC 20210

The request should be accompanied by a full statement of the interested party's position and by any information (wage payment data, project description, area practice material, etc.) that the requestor considers relevant to the issue.

3.) If the decision of the Administrator is not favorable, an interested party may appeal directly to the Administrative Review Board (formerly the Wage Appeals Board). Write to:

Administrative Review Board
U.S. Department of Labor
200 Constitution Avenue, N.W.
Washington, DC 20210

4.) All decisions by the Administrative Review Board are final.

==========

END OF GENERAL DECISION

LETTER OF COMMITMENT

A bidder/offeror may provide a letter of commitment or other similar document signed by a duly authorized agent of a surety that meets the requirements for sureties contained in these bid documents and the general conditions of the construction contract, wherein the surety commits to issue the performance and all other bonds required by these bid documents and the general conditions of the construction contract. Said commitment document shall specify the bidder/offeror and the project that is the subject of these bid documents by name and shall commit to issuing such bonds in the full amount of the contract amount in the event the bidder/offeror is awarded the contract under the terms of these bid documents.

The letter of commitment is not a substitute for the bid bond.

A bidder/offeror who provides the above described commitment letter shall not be required to provide the financial statements that are required on the following pages.

A letter of commitment is not required at the time the bid is submitted but is required upon request by the City. The City may request the letter of commitment anytime after opening the bids/offers and before submitting the proposed award of the construction contract to the El Paso City Council. Letter of commitment must be provided within five (5) consecutive calendar days of notification by the City. If the bidder/offeror does not provide the letter of commitment, then it must provide the financial information as specified in the pages that follow.

QUALIFICATION AND FINANCIAL DISCLOSURE STATEMENT
(To be provided by Bidder/Offeror within five days of request by City Engineer)

PROJECT: **NORTHGATE TRANSFER CENTER AND PARKING GARAGE**
SOLICITATION No.: **2016-748**
BIDDER: _____

BUSINESS ADDRESS: _____

PHONE NUMBER: _____ FAX NUMBER: _____

1. Organization

1.1 How many years has your organization been in business as a contractor?

1.2 How many years has your organization been in business under its present business name?

1.2.1 Under what other or former names has your organization operated?

1.3 If your organization is a corporation, answer the following:

1.3.1 Date of incorporation: _____

1.3.2 State of incorporation: _____

1.3.3 President's name: _____

1.3.4 Vice-president's name(s): _____

_____

1.3.5 Secretary's name: _____

1.3.6 Treasurer's name: _____

1.4 If your organization is a partnership, answer the following:

1.4.1 Date of organization: _____

1.4.2 Type of partnership: (if applicable) _____

1.4.3 Name(s) of general partner(s): _____

_____

1.5 If your organization is individually owned, answer the following:

1.5.1 Date of organization: _____

1.5.2 Name of owner: _____

1.6 If the form of your organization is other than those listed above, describe it and name the principals:

2. Licensing

2.1 List jurisdictions and trade categories in which your organization is legally qualified to do business, and indicate registration or license numbers, if applicable.

2.2 List jurisdictions in which your organization's partnership or trade name is filed.

3. Experience

3.1 List the categories of work that your organization normally performs with its own forces.

3.2 Claims and suits. (If the answer to any of the questions below is yes, please attach details.)

3.2.1 Has your organization ever failed to complete any work awarded to it?

3.2.2 Are there any judgments, claims, arbitration, proceedings or suits pending or outstanding against its officers?

3.2.3 Has your organization filed any law suits or requested arbitration with regard to construction contracts within the last five years?

3.3 Within the last five years, has any officer or principal of your organization ever been an officer or principal of another organization when it failed to complete a construction contract? (If the answer is yes, please attach details.)

3.4 On a separate sheet, list major construction projects your organization has in progress, giving the name of project, owner, phone number, architects, contract amount, percent complete, scheduled completion date, and type of work performed by your work forces. Include names and phone numbers of contact persons for each project.

3.4.1 State total worth of work in progress and under contract:

3.5 On a separate sheet, list the major projects your organization has completed in the past five years, giving the name of project, owner, architect, contract amount, date of completion, the type of work performed by your work forces,

and percentage of the cost of the work performed with your own forces. Include names and phone numbers of contact persons for each project.

3.5.1 State average annual amount of construction work performed during the past five years:

3.6 On a separate sheet, list the construction experience and present commitments of the key individuals of your organization.

4. References

4.1 Trade References:

4.2 Bank References:

4.3 Surety:

Name of Bonding Company: _____

Name of address of agent: _____

_____

_____

5. Financing

5.1 Financial Statement

5.1.1 Attach a financial statement, preferably audited, including your organization's latest balance sheet and income statement showing the following items:

a. Cash Flow Statement

b. Notes to Financial Statement

c. Auditor Statement

d. Comparison Statements, if available

e. Current Assets (e.g., cash, joint venture accounts, accounts receivable, notes receivable, accrued income, deposits, materials inventory and prepaid expenses);

f. Net Fixed Assets;

g. Other Assets;

h. Current Liabilities (e.g. accounts payable, notes payable, accrued expenses, provision for income taxes, advances, accrued salaries and accrued payroll taxes);

i. Other Liabilities (e.g., capital, capital stock, authorized and outstanding shares par values, earned surplus and retained earnings).

5.1.2 Name and address of firm preparing attached financial statement, and date thereof:

5.1.3 Is the attached financial statement for the identical organization named on page one?

5.1.4 If not, explain the relationship and financial responsibility of the organization whose financial statement is provided (e.g., parent subsidiary).

5. Financing

5.2 Will the organization whose financial statement is attached act as guarantor of the contract for construction?

6. Signature

6.1 Dated at _____ this _____ day of _____ 20____.

Name of Organization: _____

By: _____
Signature

_____
Name printed or typed

Title: _____

6.2 _____ being duly sworn deposes and says that the information provided herein is true and sufficiently complete so as not to be misleading.

Subscribed and sworn before me this _____ day of _____, 20__.

_____
Notary Public

My Commission Expires: _____

THE STATE OF TEXAS }
COUNTY OF EL PASO }

CONTRACT

THIS AGREEMENT, made this _____ day of _____, 20_____ by and between THE CITY OF EL PASO, acting by and through its Mass Transit Department Board hereinafter called "Owner" and _____ (circle one of the following: a corporation, a partnership, an individual), located in: CITY OF _____, COUNTY OF _____ and STATE OF _____, hereinafter called "Contractor".

WITNESSETH: That for and in consideration of the payments and agreements hereinafter mentioned, to be made and performed by the Owner, the Contractor hereby agrees with the Owner to commence and complete the construction described as follows:

NORTHGATE TRANSFER CENTER AND PARKING GARAGE
CONTRACT NO. 2016-748

hereinafter called the "Project", for the sum of _____ Dollars and _____Cents ($_____), and all extra work in connection therewith, under the terms as stated in the contract documents; and at Contractor(s) own proper cost and expense to furnish all the materials, supplies, machinery, equipment, tools, superintendence, labor, insurance and other accessories and services necessary to complete the said Project, in accordance with the conditions and prices stated in the Proposal, the General Conditions, Supplemental General Conditions and Special Conditions of the Contract, the plans, which include all maps, plats, blueprints and other drawings and printed or written explanatory matter thereof, the specifications and contract documents thereof as furnished by the CITY ENGINEER or designated representative, and as enumerated in Paragraph 1.5 of the General Conditions, all of which are made a part hereof and collectively evidence and constitute the Contract.

Offeror agrees to commence work on a date to be specified in a written “Notice to Proceed” issued by the Owner. The Contract Time shall begin on the date to commence work specified in the Notice to Proceed and shall run for **THREE HUNDRED FIFTY (350)** additional **CONSECUTIVE CALENDAR DAYS** thereafter. Offeror shall substantially complete the project within **THREE HUNDRED FIVE (305)** CONSECUTIVE CALENDAR DAYS after the date to commence work in the Notice to Proceed. Offeror agrees to pay, as liquidated damages, the sum of **TWO HUNDRED SEVENTY-EIGHT DOLLARS AND SIXTY CENTS ($278.60)** for each consecutive calendar day after the date of Substantial Completion, as hereinafter provided in the General Conditions. Offeror further agrees to pay as liquidated damages the sum of **TWO HUNDRED EIGHTY DOLLARS AND FIFTEEN CENTS ($280.15)** for each consecutive calendar day after the expiration of the Contract Time for Remaining Work, as provided in Paragraph 6.8.3.1 of the General Conditions. The unit price quantities of this contract are estimated.

Base Bid: $00.00	Option 1: $00.00	Option 2: $00.00
Option 3: $00.00	Option 4: $00.00	Total Award: $00.00

CONTRACT

IN WITNESS, WHEREOF, the parties to these presents have executed this Contract on the _____ day of _____, 20___ in two (2) counterparts, each of which shall be deemed an original, in the year and day first above mentioned.

OWNER – CITY OF EL PASO

by

_____

Tomás González, City Manager

APPROVED AS TO FORM:

_____

Assistant City Attorney

Contractor:

by

_____

_____

APPROVED AS TO CONTENT:

_____

Typed Name & Title

_____

Director, Mass Transit Department

_____

Address, City, State, Zip Code

_____ _____

Telephone Number Fax Number

APPROVED AS TO CONTENT:

_____

Department Head

If the Contractor be a corporation, the following certificate should be executed:

I, _____, certify that I am the _____ Secretary of the corporation named as Bidder, hereinabove; and that _____, who signed the foregoing Contract on behalf of the Bidder was then _____ of said corporation; that said proposal was duly signed for and in behalf of said corporation by authority of its governing body, and is within the scope of its corporate powers.

_____

CORPORATE SECRETARY SIGNATURE AND CORPORATE SEAL

PERFORMANCE BOND

(Value of this Bond must be 100% of Contract amount)

KNOW ALL MEN BY THESE PRESENTS:

THAT _____, hereinafter called the "Principal", as Principal and _____, a Corporation organized and existing under the laws of the State of _____ with its principal office in the City of _____, hereinafter called the "Surety", as Surety, are held and firmly bound unto THE SUN METRO-MASS TRANSIT DEPARTMENT OF THE CITY OF EL PASO, TEXAS, hereinafter called the "Obligee", in the amount of _____ Dollars and ___ Cents ($_____), for the payment whereof, the said Principal and Surety bind themselves and their heirs, administrators, executors, successors and assigns, jointly and severally, firmly by these presents.

WHEREAS, the Principal has entered into a certain written Contract with the Obligee, dated the _____ day of ___**,** 20___ to construct **Northgate Transfer Center and Parking Garage**, Contract No. **2016-748**, which Contract is hereby referred to and made a part hereof as fully and to the same extent as if copied at length herein.

NOW, THEREFORE, THE CONDITION OF THIS OBLIGATION IS SUCH that, if the said Principal shall faithfully perform the work in accordance with the plans, specifications and contract documents, then this obligation shall be void; otherwise, to remain in full force and effect.

PROVIDED, HOWEVER, that this Bond is executed pursuant to the provisions of Chapter 2253, Texas Government Code, as amended, and all liabilities on this Bond shall be determined in accordance with the provisions of said Chapter to the same extent as if it were copied at length herein. The Surety hereby waives notice of any change, including changes of time, to the construction contract, related subcontracts and purchase orders, which is made in accordance with Section 252.048, Texas Local Government Code.

IN WITNESS, WHEREOF, the said Principal and Surety have signed and sealed this instrument this _____ day of _____, 20___.

WITNESS: _____

ATTEST: _____

_____	_____ (Seal)
Principal - Company Name	Principal Agent Signature
_____	_____
Address	Principal Agent's Name (Printed or Typed)
_____	_____
City, State, Zip Code	
_____	_____
Telephone No.	Fax No.
_____	_____ (Seal)
Surety - Company Name	Surety Agent Signature
_____	_____
Address	Surety Agent's Name (Printed or Typed)
_____	
City, State, Zip Code	
_____	_____
Telephone No.	Fax No.

INSERT

POWER OF ATTORNEY

AFTER

PERFORMANCE BOND

NOTE:

- **DO NOT SUBSTITUTE BOND FORM**
- **BOND MUST BEAR FOUR (4) SIGNATURES: (1) WITNESS, (2) ATTEST, (3) CONTRACTOR AND (4) ATTORNEY-IN-FACT**
- **DATE ON POWER OF ATTORNEY MUST BE SAME AS DATE ON BOND**
- **SEPARATE POWER OF ATTORNEY FORMS MUST BE PROVIDED FOR EACH BOND (PERFORMANCE & PAYMENT BOND)**
- **AGENT RESIDENT DESIGNATION MUST CONTAIN SURETY'S SEAL, ASSIGNMENT BY SURETY AGENT, AND ACKNOWLEDGMENT OF SUCH ASSIGNMENT BY AGENT RESIDENT.**

PAYMENT BOND

(Value of this Bond must be 100% of Contract amount)

KNOW ALL MEN BY THESE PRESENTS:

THAT _____, hereinafter called the "Principal", as Principal and _____, a Corporation organized and existing under the laws of the State of _____ with its principal office in the City of _____, hereinafter called the "Surety", as Surety, are held and firmly bound unto THE SUN METRO-MASS TRANSIT DEPARTMENT OF THE CITY OF EL PASO, TEXAS, hereinafter called the "Obligee", in the amount of _____ Dollars and ____ Cents ($_____), for the payment whereof, the said Principal and Surety bind themselves and their heirs, administrators, executors, successors and assigns, jointly and severally, firmly by these presents.

WHEREAS, the Principal has entered into a certain written Contract with the Obligee, dated the _____ day of ____, 20___, to construct **Northgate Transfer Center and Parking Garage**, Contract No. **2016-748**, which Contract is hereby referred to and made a part hereof as fully and to the same extent as if copied at length herein.

NOW, THEREFORE, THE CONDITION OF THIS OBLIGATION IS SUCH that, if the said Principal shall pay all claimants supplying labor and materials to him, or a subcontractor in the prosecution of the work provided for in said Contract, then this obligation shall be void; otherwise, to remain in full force and effect.

PROVIDED, HOWEVER, that this Bond is executed pursuant to the provisions of Chapter 2253, Texas Government Code, as amended, and all liabilities on this Bond shall be determined in accordance with the provisions of said Chapter to the same extent as if it were copied at length herein.

IN WITNESS, WHEREOF, the said Principal and Surety have signed and sealed this instrument this _____ day of _____, 20____.

WITNESS: _____

ATTEST: _____

_____	_____ (Seal)
Principal - Company Name	Principal Agent Signature
_____	_____
Address	Principal Agent's Name (Printed or Typed)
_____	_____
City, State, Zip Code	
_____	_____
Telephone No.	Fax No.
_____	_____ (Seal)
Surety - Company Name	Surety Agent Signature
_____	_____
Address	Surety Agent's Name (Printed or Typed)
_____	
City, State, Zip Code	
_____	_____
Telephone No.	Fax No.

INSERT

POWER OF ATTORNEY

AFTER

PAYMENT BOND

NOTE:

- **DO NOT SUBSTITUTE BOND FORM**
- **BOND MUST BEAR FOUR (4) SIGNATURES: (1) WITNESS, (2) ATTEST, (3) CONTRACTOR AND (4) ATTORNEY-IN-FACT**
- **DATE ON POWER OF ATTORNEY MUST BE SAME AS DATE ON BOND**
- **A SEPARATE POWER OF ATTORNEY FORM MUST BE PROVIDED FOR EACH BOND (PERFORMANCE & PAYMENT BOND)**
- **AGENT RESIDENT DESIGNATION MUST CONTAIN SURETY'S SEAL, ASSIGNMENT BY SURETY AGENT, AND ACKNOWLEDGMENT OF SUCH ASSIGNMENT BY AGENT RESIDENT.**

AGENT RESIDENT DESIGNATION

NORTHGATE TRANSFER CENTER AND PARKING GARAGE
Contract No. 2016-748

SURETY INFORMATION

_____, as Surety on the Performance and Payment Bonds for this contract, hereby appoints the following resident agent who resides within the County of El Paso and to whom any requisite notices may be delivered and on whom service of process may be had in matters arising out of suretyship, pursuant to Article 7.19-1 of the Texas Insurance Code and Chapter 2253, Texas Government Code.

Assigned By:

_____(Seal)
Surety Agent

_____
Surety Agent's Signature

_____
Date

AGENT INFORMATION

Agent Resident:_____

Business Address:_____

_____

Telephone & Fax Nos. _____

Acknowledged By:

_____
Agent Resident's Name (Printed or Typed)

_____
Agent Resident's Signature

NOTIFICATION TO CONSTRUCTION CONTRACTORS

INSURANCE REQUIREMENTS

Note: Refer to the Contract General Conditions, Paragraphs 5.11 through 5.12 for complete insurance requirements for this project.

1. Commercial General Liability, Property Damage Liability, and Vehicle Liability Insurance Requirements:

Commercial General Liability Bodily Injury	$1,000,000.00 each person
Property Damage	$1,000,000.00 each occurrence
General Aggregate	$2,000,000.00
Vehicle Liability (Any Auto) Combined Single Limit	$1,000,000.00

2. Builder's Risk Insurance (fire and extended coverage) for certain projects is required for 100% of the completed value only when designated on p. II.E.1.A

3. The City of El Paso shall be named as an *Additional Insured* on all insurance policies except Workers' Compensation Insurance Coverage shall be provided by endorsement to the policy of insurance. The project name, type, amount, class of operations covered, effective dates and dates of expiration of policies shall be shown on certificate.

4. Statutory Texas Workers' Compensation Insurance Coverage:

   Workers' Compensation policy shall be endorsed to provide that the insurer waives any right of subrogation it may require against the Owner, the Architect/Engineer of Record and Construction Manager where applicable, see General Conditions, 5.12.

5. A 30-day notice of policy cancellation or material alteration.

6. **Important:**

   The language of the cancellation notice must substantially contain the **unconditional** statement: "Should any of the described policies be canceled or materially altered before the expiration date, the issuing company shall provide thirty (30) days written notice to the Owner-City of El Paso by certified mail." See General Conditions 5.11 (E); the words ***"endeavor to notify"*** and ***"failure to notify shall impose no obligation or liability upon the company ..."*** **are not acceptable**.

SPECIAL NOTE:

Worker's Compensation, Waiver of Subrogation, City of El Paso named as an Additional Insured and the 30-day cancellation notice must all be done through endorsement by the insurer. The document may be an endorsement, a rider or an amendment to the policy and it must include the policy number.

Builder's Risk Insurance (fire and extended coverage) **IS REQUIRED** for:

NORTHGATE TRANSFER CENTER AND PARKING GARAGE
Solicitation No. 2016-748

(***100 % OF THE VALUE OF THE CONTRACT)*. As follows: TBD**

INSERT

INSURANCE CERTIFICATE

HERE

- BUILDER'S RISK COVERAGE REQUIRED FOR ALL BUILDING PROJECTS
- CITY OF EL PASO MUST BE SHOWN AS AN "ADDITIONAL INSURED" ON GENERAL LIABILITY AND AUTOMOBILE LIABILITY
- WORKERS' COMPENSATION CERTIFICATE MUST SHOW A WAIVER OF SUBROGATION AGAINST THE OWNER/CITY, ARCHITECT/ENGINEER AND CONSTRUCTION MANAGER, WHERE APPLICABLE
- ALL ENDORSEMENTS MUST CONTAIN THE FOLLOWING UNCONDITIONAL STATEMENT REGARDING CANCELLATION: "Should any of the described policies be canceled or materially altered before the expiration date, the issuing company shall provide thirty (30) days written notice to the Owner-City of El Paso by certified mail." See General Conditions 5.11 (E); the words *"endeavor to notify"* and *"failure to notify shall impose no obligation or liability upon the company..."* are not acceptable

CERTIFICATE OF OWNER'S ATTORNEY

NORTHGATE TRANSFER CENTER AND PARKING GARAGE
CONTRACT NO. 2016-748

I, the undersigned, as Assistant City Attorney, the duly authorized and acting legal representative of the Sun Metro-Mass Transit Department of The City of El Paso, do hereby certify as follows:

I have examined the attached contract(s) and surety bonds and the manner of execution thereof, and I am of the opinion that each of the aforesaid agreements has been duly executed by the proper parties thereto, acting through their duly authorized representative; that said representatives have full power and authority to execute said agreements on behalf of the respective parties named thereon; and that the foregoing agreements constitute valid and legally binding obligations upon the parties executing the same, in accordance with the terms, conditions and provisions thereof.

This certification applies only to officials of the City of El Paso and does not purport to apply to any party entering this contract with the City.

_____
Assistant City Attorney

_____
Date

CITY OF EL PASO, TEXAS
CONSTRUCTION CONTRACT
GENERAL CONDITIONS

Table of Contents

1.0 TERMS OF CONTRACT AND DEFINITIONS

1.1 Contract and Contract Documents
1.2 Definitions
1.3 Abbreviations
1.4 Conflicting Conditions
1.5 Enumeration of Plans, Specifications & Addenda

2.0 SCOPE OF WORK

2.1 Intent of Contract
2.2 Changes and Alterations
2.3 Differing Site/Concealed Conditions
2.4 Quantities of Estimate
2.5 Change Orders and Claims for Extra Work
2.6 Maintenance and Protection of Traffic
2.7 Additional Instructions and Detail Drawings
2.8 Shop or Setting Drawings
2.9 Conformity with Plans and Specifications
2.10 Use of Premises and Removal of Debris
2.11 Clean Up
2.12 Surveys, Permits and Regulations
2.13 Land and Right-of-Way

3.0 CONTROL OF WORK

3.1 Engineering City Engineer’s Authority/
Owner's Designated Representative
3.2 Construction Management
3.3 Reports, Records and Data
3.4 Cooperation with Utilities
3.5 Cooperation between Contractors
3.6 Inspection
3.7 Acceptance of the Work

4.0 CONTROL OF MATERIALS

4.1 Source of Supply and Quality Requirement
4.2 Contractor's Title of Materials
4.3 "Or Equal" Clause
4.4 Inspection and Testing of Materials
4.5 Rights in and Use of Materials Found on the Work Site
4.6 Handling Materials

4.7 Disposal of Materials outside the Work Site
4.8 Unacceptable Materials

5.0 CONTRACTOR'S RESPONSIBILITIES AND LEGAL OBLIGATIONS

5.1 Laws to be observed
5.2 Provisions Required by Law Deemed Inserted
5.3 Patented Devices, Materials and Processes
5.4 Public Convenience and Safety
5.5 Use of Explosives
5.6 Protection of Work and Property
5.7 Protection of Work and Property - Emergency
5.8 Protection of Work and Property - Monitor Wells
5.9 Mutual Responsibility of Contractor
5.10 Indemnification
5.11 Insurance
5.12 Texas Workers' Compensation Requirements
5.13 Contract Security
5.14 Additional or Substitute Bond
5.15 Contractor's Obligations
5.16 Correction of Work
5.17 Warranty of Construction
5.18 Use and Occupancy Prior to Acceptance by Owner
5.19 Contractor's Responsibilities for Utility Property and Services
5.20 Obligation for Temporary Electrical Power
5.21 Environmental Protection
5.22 Texas Pollutant Discharge Elimination System (TPDES) Requirements
5.23 Prevailing Wage Rates and Wage Rate Penalty
5.24 Apprentices
5.25 Apprenticeship Program

6.0 PROSECUTION AND PROGRESS

6.1 Subcontracting
6.2 Notice and Service Thereof
6.3 Progress Schedule
6.4 Limitation of Operations
6.5 Character of Workmen; Methods and Equipment
6.6 Progress Photographs
6.7 Suspension of Work
6.8 Time for Completion and Liquidated Damages
6.9 Right of Owner to Terminate Contract
6.10 Default of Contract

7.0 PAYMENTS

7.1 Construction Schedule and Periodic Estimate
7.2 Progress Payments
7.3 Assignments
7.4 Acceptance of Final Payment Constitutes Release
7.5 Payrolls and Basic Records

8.0 DISPUTES AND REMEDIES

8.1 Dispute Resolution
8.2 Governing Law
8.3 Rights and Remedies
8.4 Illegality

9.0 RECORDS/AUDIT

1.0 TERMS OF CONTRACT AND DEFINITIONS

1.1 Contract and Contract Documents

1.1.1 The Plans, Specifications and Addenda, hereinafter enumerated in Paragraph 1.5 of the General Conditions, shall form part of this contract and the provisions thereof shall be as binding upon the parties hereto as if they were herein fully set forth. The table of contents, titles, headings, running headlines and marginal notes contained herein and in said documents are solely to facilitate reference to various provisions of the contract documents and in no way affect, limit or cast light on the interpretation of the provisions to which they refer.

1.1.2 The specifications, the accompanying plans, special provisions and supplemental agreements are essential parts of this contract, and a requirement occurring in one is as binding as though occurring in all. They are intended to describe and provide for a complete project. In the event that there are differences between the contract documents, the following rules shall govern:

1.1.2.1 Written figured dimensions shall govern over scaled dimensions;

1.1.2.2 General Conditions shall govern over specific provisions;

1.1.2.3 Performance specifications shall govern over design specifications if they call for specific results;

1.1.2.4 Specifications shall govern over plans; and

1.1.2.5 Special provisions shall govern over both specifications and plans.

1.1.3 Where conflicts/differences exist, the Contractor has a duty to and shall consult with and obtain written clarification from the Design Engineer/Architect.

1.1.4 Any certificates required by a federal agency or other special funding source, and any conditions supplementing these general conditions shall be fully binding on the parties and shall supersede any contradicting provisions contained herein.

1.1.5 The Contractor shall take no advantage of any apparent error or omission in the plans or specifications. In the event the Contractor discovers such an error or omission, the City Engineer shall be promptly notified. The City Engineer will then make such corrections and interpretations as may be deemed necessary for fulfilling the intent of the plans and specifications.

1.2 **Definitions**

1.2.1 The following terms, as used in this contract, are respectively defined as follows:

1.2.1.1 "Contractor" - The person, firm, partnership or corporation who undertakes to perform the work specified in this contract. The Contractor is an independent contractor, and shall be solely responsible for its acts or omissions arising from or relating to its performance of this Agreement. The Contractor is not an employee or agent of the City of El Paso by reason of this Agreement or otherwise.

1.2.1.2 “Contract Time” means the number of consecutive calendar days specified in the contract immediately after the date to commence work issued by Owner in the Notice to Proceed and includes both the time allowed for completion of the work required to achieve Substantial Completion and the time allowed to complete the Remaining Work.

1.2.1.3 “Remaining Work” means the work required by the Contract, but not required for Substantial Completion, that the City Engineer determines has not been satisfactorily completed at the time of Substantial Completion and all maintenance and operating instructions, schedules, guarantees, warranties, bonds, certificates of inspection, marked-up record documents, prevailing wage compliance reports and other documents as required by the Contract. “Remaining Work” may also be referred to as “Punch List” work.

1.2.1.4 "Subcontractor" - A person, firm, partnership or corporation supplying labor and materials, or only labor, for work at the site of the project for and under separate contract or agreement with the Contractor.

1.2.1.5 "Work on/at the Project" - Work to be performed at the location of the project, including the transportation of materials and supplies to or from the location of the project by employees of the Contractor and any Subcontractor.

1.2.1.6 "Substantially Complete" - A project is substantially complete on the date when the construction is sufficiently complete, in accordance with the contract documents, so that the Owner may occupy or utilize the work or designated portion thereof for the use for which it is intended as expressed in the contract documents.

1.3 **Abbreviations**

Wherever the following abbreviations are used in the contract documents, they are to be construed the same as the respective expressions represented:

A.A.S.H.T.O.	American Association of State Highway and Transportation Officials
A.C.I.	American Concrete Institute
A.I.A.	American Institute of Architects
A.I.S.C.	American Institute of Steel Construction
A.N.S.I.	American National Standards Institute
C.B.R.	California Bearing Ratio
C.R.S.I.	Concrete Reinforcing Steel Institute
C.Y. or Cu. Yd .	Cubic Yard
Dia. or Diam.	Diameter
E.P.A.	Environmental Protection Agency
F.A.A.	Federal Aviation Administration
Ft.	Foot or Feet
In.	Inch or Inches
Lb.	Pound
L.F. or Lin. Ft.	Linear Foot (Feet)
L.S.	Lump Sum
N.E.C.	National Electrical Code
N.R.M.C.A.	National Ready Mixed Concrete Assoc.
O.S.H.A.	Occupational Safety and Health Administration
P.C.A.	Portland Cement Association
P.C.I.	Prestressed Concrete Institute
S.Y. or Sq. Yd.	Square Yard
T.D.O.T.	Texas Department of Transportation

1.4 Conflicting Conditions

Any provisions in any of the contract documents which may be in conflict or inconsistent with any of the paragraphs in these General Conditions shall be void to the extent of such conflict or inconsistency, except as stated in Paragraph 1.1.

1.5 Enumeration of Plans, Specifications, and Addenda *(Revised 12/3/04)*

The plans, specifications and addenda which form a part of this contract, as set forth in Paragraph 1.1 of the General Conditions, "Contract and Contract Documents", are attached hereto and incorporated herein by reference.

2.0 SCOPE OF WORK

2.1 Intent of Contract

It is the intent of the contract documents to describe a functionally complete project to be constructed to its completion in every detail of the work described. The Contractor shall furnish all labor, materials, equipment, transportation, and supplies required to complete the work in accordance with the plans, specifications, and terms and conditions of the contract.

2.2 Changes and Alterations

2.2.1 The Contractor further agrees that the Owner may make such changes and alterations as the Owner may see fit, in the line, grade, form, dimensions,

plans or materials for the work herein contemplated, or any part thereof, either before or after the beginning of construction without affecting the validity of this contract and the accompanying bond.

2.2.2 If such changes or alterations diminish the quantity of the work to be done, they shall not constitute the basis for a claim for damages, or anticipated profits on the work that may be dispensed with. If they increase the amount of work, and the increased work can fairly be classified under the specifications, such increase shall be paid according to the quantity actually done and at the unit price established for such work under this contract; otherwise, such additional work shall be paid for as provided under Paragraph 2.5, as it relates to extra work.

2.2.3.1 In case the Owner shall make such changes or alterations as shall make useless any work already done or material already furnished or used in said work, then the Owner shall recompense the Contractor for any material or labor so used and for any actual loss occasioned by such change, due to actual expenses incurred in preparation for the work, as originally planned.

2.3 Differing Site/Concealed Conditions

Should the Contractor encounter subsurface or latent conditions at the site or concealed or unknown conditions in an existing structure materially differing from those shown on the plans or indicated in the specifications, the Contractor shall immediately give notice to the Owner's designated representative of such conditions before they are disturbed. The Owner's designated representative will thereupon promptly investigate the conditions, and if he/she finds that they materially differ from those shown on the plans or indicated in the specifications, he/she will at once make such changes in the plans or specifications as he/she may find necessary, any increase or decrease of cost resulting from such changes shall be adjusted in the manner provided in Paragraph 2.5 herein.

2.4 Quantities of Estimate

Wherever the estimated quantities of work to be done and materials to be furnished under this contract are shown in any of the documents, including the proposal, they are given for use in comparing bids and the right is expressly reserved, except as herein otherwise specifically limited, to increase or diminish them as may be deemed reasonably necessary or desirable by the Owner to complete the work contemplated by this contract, and such increase or diminution shall in no way violate this contract, nor shall any such increase or diminution give cause for claims of liability for damages.

2.5 Change Orders and Claims for Extra Work

2.5.1 Without invalidating the contract or the accompanying Payment or Performance Bond and without obtaining the consent of the Surety or Sureties, the Owner may, in accordance with applicable state law, order extra work or make changes by altering, adding to or deducting from the work, the contract sum being adjusted accordingly. Any changes in the work ordered and approved by the Owner shall become a part of the contract work and shall be covered by the accompanying Payment and

Performance Bonds. All the work of the kind bid upon shall be paid for at the price stipulated in the proposal and **no claims for any extra work or materials shall be allowed unless the work is ordered in writing by the Owner or Owner's designated representative, acting officially for the Owner, in accordance with applicable state law, and the price is stated in such order.** Additional time for change orders or utilities delays, which affect the contractor, shall be considered estimates upon their granting. The Owner reserves the right to review the actual time utilized by the contractor in the completion of the additional work of the change order at the termination of the project. Owner shall then adjust time granted per change order to reflect the actual time required by the contractor for the completion of each change order.

2.5.2 **NO CHANGES IN THE WORK COVERED BY THE APPROVED CONTRACT SHALL BE MADE WITHOUT HAVING PRIOR WRITTEN APPROVAL OF THE OWNER OR OWNER'S DESIGNATED REPRESENTATIVE AS AFORESAID.** Charges or credits for the work covered by the approved change shall be determined by one or more, or a combination of the following methods:

2.5.2.1 Unit Bid prices previously approved.

2.5.2.2 An agreed lump sum.

2.5.2.3 The actual cost of:

2.5.2.3.1 Labor, including foreman;

2.5.2.3.2 Materials and supplies, entering permanently into the work;

2.5.2.3.3 Ownership or rental cost of construction plant and equipment during the time of use on the extra work;

2.5.2.3.4 Power and consumable supplies for the operation of power equipment;

2.5.2.3.5 Public Liability and Property Damage, Worker's Compensation and all other insurances as may be required by law or ordinances, or directed by the Owner or the Owner's Representative, or by them agreed to, and;

2.5.2.3.6 Social Security, Old Age, Unemployment Contributions and Maintenance Bonds

2.5.2.4 To the cost under subparagraph 2.5.2.3 above, there shall be added a fixed fee to be agreed upon but not to exceed fifteen percent (15%) of the actual cost of the work. The fee shall be compensation to cover the cost of supervision, overhead, bond, profit and any other general expenses.

2.5.3 **No claim for extra work or cost shall be allowed unless the same was done in pursuance of a written order of the Owner's designated representative**, approved by the Owner, as aforesaid. Upon receipt of a change order cost proposal from the contractor, the owner shall have fourteen (14) calendar days in which to respond to the proposal. When work is performed under the terms of subparagraph 2.5.2.3 above, the Contractor shall furnish satisfactory bills, payrolls and vouchers covering all items of cost and, when requested by the Owner, access to accounts relating thereto.

2.6 Maintenance and Protection of Traffic

2.6.1 The Contractor shall make all necessary precautions to guard against damages to property and injury to persons. The Contractor shall prepare a traffic control plan acceptable to and approved by the Traffic Engineer or his/her representative.

2.6.2 **Guidelines for Traffic Control Plans**. A plan, drawn to scale and with the following information, is required for any activity which requires the use of the roadway or adjacent pedestrian walkway in conjunction with any street cut permit, building permit, site development permit, drainage development permit, special privilege permit, or any roadway construction.

2.6.2.1 Activity location, right-of-way, and curb lines of the street or pedestrian walkway sought to be closed or blocked.

2.6.2.2 Area of street or pedestrian walkway to be closed

2.6.2.3 Proposed detour routes.

2.6.2.4 Location and type of all barricades, signals, signs, cones, and other warning devices

2.6.2.5 The times of the day, and the total number of days, the applicant seeks to block the streets or Pedestrian walkway.

2.6.2.6 The construction zone traffic control design and plans shall conform to the specifications and principles of the "Texas Manual of Traffic Control Devices", Part VI 1980 Edition, latest revision, issued by the Texas Department of Transportation.

2.6.3 Traffic control plans will be submitted to the Engineering Department Traffic Division for approval. Any work performed on streets or pedestrian walkways, without an approved traffic control plan, will be stopped and may be subject to any penalties as per the El Paso Municipal Codes.

2.6.4 The Contractor shall put up and maintain in good condition, sufficient warning lights at night and suitable barricades and other devices necessary to protect the public. In case the Contractor fails or neglects to take such precautions, the Owner shall notify and allow the contractor four hours in which to install or restore to working order all devices necessary to protect the public. If the Contractor does not comply, the Owner shall install lights

and barricades and the cost of the work shall be charged to the Contractor. Such action by the Owner does not relieve the Contractor of any liability incurred under these specifications or the contract.

2.6.5 The Contractor will be held responsible for all damage to the work due to failure of barricades, signs and lights to protect it, and when damage is incurred, the damaged portion shall be immediately removed and replaced by Contractor at his own cost and expense. The Contractor's responsibility for maintenance of barricades, signs and lights shall not cease until the date of issuance to Contractor of City's certificate of substantial completion of the project.

2.6.6 **Description**: These specifications shall govern for the handling of traffic around and through the area during all phases of construction and the furnishing of all barricades, flags, flagmen and other essentials necessary to complete this work as required on the plans and in this specification.

2.6.7 **Barricades, Flags, Warning Signs, etc.**: Barricades, flags, warning signs, etc., shall conform to specifications given in the latest edition of the *Texas Manual on Uniform Traffic Control Devices*, Part VI, issued by the Texas State Department of Highways and Public Transportation, hereinafter called the manual, a copy of which is on file in the office of the Traffic Engineer, Engineering Department, City of El Paso.

2.6.8 **Sequence of Operations**: Sequence of operations shall be called for on the approved plans by the Traffic Engineer.

2.6.9 Before removal of barricades and other traffic control signs, the Contractor shall notify the Traffic Engineer of the Contractor's intent. Advance warning shall be given in sufficient time to permit the Director to install traffic control devices (striping, signs, etc.) before any street is reopened to traffic.

2.6.10 **Payment:** Payment for the furnishings of barricades, flags, flares, warning signs, flagmen and other incidentals and inconveniences necessary for the accomplishment of the work and objectives stated herein will not be made directly. The cost of such devices, if any, should be included in the amount bid, but not as a separate line item.

2.7 Additional Instructions and Detail Drawings

2.7.1 The Contractor will be furnished additional instructions and detail drawings as necessary to carry out the work included in the contract. The additional drawings and instructions thus supplied to the Contractor will coordinate with the contract documents and will be so prepared that they can be reasonably interpreted as part thereof. The Contractor shall carry out the work in accordance with the additional detail drawings and instructions. The Contractor and the Owner's designated representative will prepare jointly:

2.7.2 A schedule fixing the dates at which special detail drawings will be required, such drawings, if any to be furnished by the Owner's designated

representative in accordance with said schedule; and A schedule fixing the respective dates for the submission of shop drawings, the beginning of manufacture, testing and installation of materials, supplies and equipment, and the completion of the various parts of the work; each sum schedule to be subject to change from time to time in accordance with the progress of the work.

2.8 Shop or Setting Drawings

2.8.1 The Contractor shall submit promptly to the Owner's designated representative five (5) copies of each shop or setting drawings prepared in accordance with the schedule predetermined in accordance with Paragraph 2.7 herein. After examination of such drawings by the Owner's designated representative and the return thereof, the Contractor shall make such corrections to the drawings as have been indicated and shall furnish the Owner's designated representative a minimum of four (4) sets.

2.8.2 The Contractor shall, nevertheless, be responsible for the accuracy of such drawings and for their conformity to the plans and specifications, unless he/she notifies the Owner's designated representative in writing of any deviations at the time he/she furnishes such drawings.

2.9 Conformity with Plans and Specifications

2.9.1 All work performed and all materials furnished shall conform to the lines, grades, cross sections, dimensions, and material requirements, including tolerances, shown on the plans or indicated in the specifications.

2.9.2 Plan dimensions and contract specification values are to be considered as the target values to be strived for and complied with as the design values from which any deviations are allowed. It is the intent of the specifications that the materials and workmanship shall be uniform in character and shall conform as nearly as possible to the prescribed target value or the middle portion of the tolerance range. The purpose of the tolerance range is to accommodate occasional minor variations from the median zone that are unavoidable for practical reasons. When either a maximum and minimum value or both are specified, the production and processing of the material and the performance of the work shall be so controlled that material or work will not be preponderantly of borderline quality or dimension.

2.9.3 In the event the City Engineer finds the materials furnished, work performed, or the finished product not in conformance with the plans and specifications but that acceptable work has been produced, the City Engineer shall then make a determination as to whether the work shall be accepted and remain in place. In this event, the City Engineer will document the basis of acceptance by contract modification which will provide for an appropriate adjustment in the contract price for such work or materials necessary to conform to his determination.

2.9.4 In the event the City Engineer finds the materials or the finished product in which the materials are used are not in conformance with the plans and

specifications, and have resulted in an unsatisfactory or unacceptable product, the work or materials shall be removed and replaced or otherwise corrected by and at the expense of the Contractor in a manner satisfactory to the City Engineer.

2.10 **Use of Premises and Removal of Debris**

2.10.1 The Contractor expressly undertakes at his/her own expense:

2.10.1.1 To take every precaution against injuries to persons or damage to property;

2.10.1.2 To store his/her apparatus, materials, supplies and equipment in such orderly fashion at the site of the work as will not unduly interfere with the progress of his/her work or the work of any other contractors;

2.10.1.3 To place upon the work or any part thereof only such loads as are consistent with the safety of that portion of the work;

2.10.1.4 To clean up frequently all refuse, rubbish, scrap materials and debris caused by his/her operations, to the end that at all times the site of the work shall present a neat, orderly and workmanlike appearance;

2.10.1.5 Before final payment to remove all surplus material, false-work temporary structures, including foundations thereof, plant of any description and debris of every nature resulting from his/her operations, and to put the site in a neat, orderly condition;

2.10.1.6 To affect all cutting, fitting or patching of his/her work required to make the same to conform to the plans and specifications and except with the consent of the Owner's designated representative, not to cut or otherwise alter the work of any other contractor.

2.11 **Clean Up**

The Contractor shall throughout the life of the contract keep his work and storage areas free of accumulations of waste materials, rubbish, trash, and debris. Before final inspection of the work, all waste and surplus material, trash, rubbish, debris, and equipment shall be removed from the project site, material site, and other areas occupied by him in connection with the work. All areas shall be left in a neat and presentable condition.

2.12 **Surveys, Permits and Regulations**

2.12.1 The Owner will establish horizontal and vertical control only. The Contractor must furnish all additional stakes for the layout and construction of the project.

2.12.2 The work to be done shall be staked out by the Contractor from line and grade control stakes furnished by the Owner or Owner's designated representative. Only the minimum number of control stakes will be furnished by the Owner or Owner's designated representative to define the lines and grades to be used by the Contractor in laying out the work.

2.12.3 The Contractor shall give the Owner at least thirty six (36) hours notice in writing before requiring that control stakes be set out.

2.12.4 The Contractor must satisfy himself before commencing work as to the meaning or correctness of all control stakes or marks, and no claims will be considered by the Owner for or on account of any alleged inaccuracies, unless the Contractor notifies the Owner thereof in writing before commencing the work thereon.

2.12.5 The Contractor will be held responsible for the preservation of all such control stakes and marks in their position, and in case any of them are lost or destroyed, all expenses incurred by the Owner in replacing same shall be charged against the Contractor and paid for by him/her before the completion and final acceptance of the work.

2.12.6 The Contractor shall procure and pay for all applicable permits, licenses, and approvals necessary for the execution of the contract. Fees for permits issued by the City's Department of Building Services will be waived for work done at facilities owned or managed by the Owner. Fees, licenses, and permits pertaining to the collection, transport, and disposal of waste materials from the project shall be paid by the Contractor.

2.12.7 The Contractor shall comply with all laws, ordinances, rules, orders and regulations relating to performance of the work, the protection of adjacent property and the maintenance of passage-ways, guard fences, lateral supports or other protective facilities.

2.13 Land and Right-of-Way

2.13.1 Prior to the start of construction, the Owner shall obtain all land and right-of-way necessary for the carrying out of and completion of work to be performed under this contract.

2.13.2 The Owner's designated representative must be notified twenty-four (24) hours in advance of any work involving the placement of curbs, pavement or storm sewers on City right-of-way.

3.0 CONTROL OF WORK

3.1 City Engineer's Authority/Owner's Designated Representative

3.1.1 The City Engineer shall give all orders and directions contemplated under this contract and specifications relative to the execution of the work. The City Engineer shall determine the amount, quality, acceptability and fitness of the several kinds of work and materials which may arise in relation to

said work and the construction thereof. The City Engineer's estimates and decisions shall be final and conclusive except as herein otherwise expressly provided. In case any questions shall arise between the parties hereto relative to this contract or specifications, the determination or decision of the City Engineer shall be a condition precedent to the right of the Contractor to receive any money or payment for work under this contract affected in any manner or to any extent by such question. The City Engineer shall decide the meaning and intent of any portion of the specifications and of any plans or drawings where the same may be found obscure or be in dispute. Any differences or conflicts in regard to their work which may arise between the Contractor under this contract and other contractors performing the work for the Owner shall be adjusted and determined by the City Engineer.

3.1.2 The City Engineer may designate, in writing, an Architect/Engineer or another competent agent to act as his/her representative in the exercise of the authority of the City Engineer as set forth in this clause.

3.2 Construction Management

3.2.1 **Authority and Duties of the Construction Engineer:**

As the direct representative of the City Engineer, the Construction Engineer has immediate charge of the engineering details of each construction project and is responsible for the administration and satisfactory completion of the project.

3.2.2 **Duties of the Inspector**:

Inspectors employed by the City of El Paso Engineering Department will be authorized to inspect all work done and materials furnished. Such inspection may extend to all or any part of the work and to the preparation, fabrication, or manufacture of the materials to be used. The Inspector will not be authorized to alter or waive the provisions of the contract. The Inspector will not be authorized to issue instructions contrary to the plans and specifications, or to act as foreman for the Contractor; however, the Inspector shall have the authority to reject work or materials until any questions at issue can be referred to and decided by the City Engineer.

3.3 Reports, Records and Data

The Contractor shall submit to the Owner or Owner's designated representative such schedule of quantities and costs, progress schedules, payrolls, reports, estimates, records and other data as the Owner or Owner's designated representative may request concerning work performed or to be performed under this contract.

3.4 Cooperation with Utilities

3.4.1 It is strongly recommended that the Contractor visit and familiarize himself with the project site prior to submitting bids.

3.4.2 The Contractor shall coordinate the construction schedule with all utilities

and all other affected agencies.

3.4.3 The Contractor shall, at no additional cost to the Owner, be responsible for the replacement of any above or below ground utility lines damaged from any of the Contractor's operation during the period of the contract. The Contractor shall comply with all federal, state and local governmental rules, regulations, laws and ordinances governing any work done under this section.

3.4.4 The Contractor will notify all utility parties affected, and endeavor to have all necessary adjustments of the public or private utility fixtures, pipelines, and other appurtenances within or adjacent to the limits of construction, made as soon as practicable.

3.4.5 Water lines, gas lines, wire lines, service connections, water and gas meter boxes, water and gas valve boxes, light standards, cableways, signals, and all other utility appurtenances within the limits of the proposed construction that are to be relocated or adjusted are to be moved by the owners at their expense, unless otherwise provided in the contract.

3.4.6 It is understood and agreed that the Contractor has considered in the bid all of the permanent and temporary utility appurtenances in their present or relocated positions as shown on the plans and that no additional compensation will be allowed for any delays, inconvenience, or damage sustained due to any interference from the said utility appurtenances or the operation of moving them.

NOTE: The technical specifications will indicate various utility items, some of which are to be relocated or adjusted by the utility owner and others that are to be relocated or adjusted by the Contractor.

3.5 Cooperation between Contractors

The Contractor shall coordinate his/her operations with those of other contractors. Cooperation will be required in the arrangement for the storage of materials and in the detailed execution of the work. The Contractor, including his/her subcontractors, shall keep informed of the progress and the detail work of other contractors and shall notify the Owner's designated representative immediately of lack of progress or defective workmanship and/or materials on the part of other contractors. Failure of the Contractor to keep informed of the work progressing on the site and failure to give notice of lack of progress or defective workmanship by others shall be construed as acceptance by him/her of the status of the work as being satisfactory for proper coordination with his/her own work.

3.6 Inspection

3.6.1 The authorized representative and agents of the City, State or Federal agencies, if applicable, shall be permitted to inspect all work, materials, payrolls, records of personnel, invoices of materials and other relevant data and records.

3.6.2 Additionally, authorized representatives and agents of the City, State or Federal agencies, if applicable, shall be permitted to interview any personnel performing work on behalf of or in relation to the project, including but not limited to, workers on the job site.

3.7 Acceptance of the Work

3.7.1 **Partial Acceptance** – If at any time during the prosecution of the project, the Contractor substantially completes a unit or distinct portion of the project, such as a structure, and intersection or a section of road or pavement, the Contractor may request the City Engineer to make a final inspection of the unit or portion of the project. If the City Engineer finds upon inspection that the unit or portion of the project has been satisfactorily completed in compliance with the contract, he may accept that unit or portion of the project as being completed provided that the Contractor shall remain responsible for completion of any Remaining Work of such unit or portion of the project. Units or portions of the project eligible for the partial acceptance allowed in this paragraph shall be identified specifically in the contract documents as eligible for partial acceptance. Such partial acceptance shall in no way void or alter any of the terms of the Contract.

3.7.2 **Final Acceptance** – Upon due notice from the Contractor of completion of the entire project, the City Engineer shall make an inspection. If all construction provided for and contemplated by the contract is found to be completed to the City Engineer's satisfaction then that inspection shall constitute the final inspection and the City Engineer shall notify the contractor in writing of final acceptance effective as of the date of the final inspection.

3.7.3 **Remaining Work after Substantial Completion**. If the City Engineer determines that the work required by the Contract is Substantially Complete during an inspection conducted pursuant to Sections 3.7.1 or 3.7.2, the Contractor shall be notified of that determination and the City Engineer shall determine if there is Remaining Work. A list of Remaining Work shall be issued only by the City Engineer and only after the City Engineer has certified Substantial Completion. The City Engineer shall give the Contractor the necessary instructions for correction or completion of the Remaining Work, and the Contractor shall immediately comply with and execute such instructions within the Contract Time. Upon completion of the Remaining Work, another inspection shall be made that shall constitute the final inspection, provided the Remaining Work has been completed to the satisfaction of the City Engineer. If the remaining work has been completed to the satisfaction of the City Engineer, the City Engineer shall make the final acceptance and notify the Contractor in writing of this acceptance as of the date of final inspection.

3.7.3.1. **Default for failure to Complete Remaining Work** In the event the Contract Time expires before the Remaining Work is completed to the satisfaction of the City Engineer, the Owner may provide notice to the Contractor that the Remaining Work shall be completed by Contractor to the satisfaction of the City Engineer within ten consecutive calendar days from the date of such notice. The failure of the Contractor to satisfactorily

complete the Remaining Work within the ten days shall entitle to Owner to declare Contractor in default and thereafter terminate the Contract. The ten-day notice provided under this paragraph shall not be construed as adding any time to the Contract Time and is a time period solely for the purposes of providing notice of default.

3.7.4 **Application for Final Payment**. After the Contractor has completed all Remaining Work to the satisfaction of the City Engineer and delivered all maintenance and operating instructions, schedules, guarantees, warranties, bonds, certificates of inspection, marked-up record documents and other documents as required by the Contract, and after the City Engineer has indicated that the work is acceptable, as provided in Section 3.7, Contractor may make application for final payment following the procedure for progress payments. The final application for payment shall be accompanied by all documentation called for in the Contract, together with complete and legally effective releases or waivers (satisfactory to the Owner) of all liens arising out of or filed in connection with the work on the project. In lieu thereof, as approved by Owner, Contractor may furnish receipts or leases in full from suppliers, subcontractors and laborers along with an affidavit of contractor that the releases and receipts include all labor, services, material and equipment for which a lien could be filed and that all payrolls material and equipment bills and other indebtedness connected with the work for which Owner or owner's property might in any be responsible, have been paid otherwise satisfied; and consent of the surety, if any to final payment.

3.7.5 **Final Payment and Acceptance**. If the City Engineer determines that the work has been completed and the Contractor's other obligations under the Contract have been fulfilled, the City Engineer shall, within ten days after receipt of the final application for payment, indicate in writing the City Engineer's recommendation of payment and present the application to Owner for payment. Thereupon the City Engineer shall prepare a Certificate of Final Completion. Otherwise, City Engineer shall return the application to Contractor indicating in writing the reasons for refusing to recommend final payment. Contractor shall make the corrections identified in the City Engineer's refusal to recommend final payment. Thirty days after presentation to Owner of the application and accompanying documentation, with the City Engineer's recommendation and notice of acceptability of the work, the amount recommended by Engineer shall become due and payable by Owner to Contractor.

4.0 CONTROL OF MATERIALS

4.1 Source of Supply and Quality Requirement

4.1.1 The materials used on the work shall meet all quality requirements of the contract. In order to expedite the inspection and testing of material, the Contractor shall notify the Owner's designated representative of his proposed sources of materials prior to delivery.

4.1.2 At the option of the Owner's designated representative, materials may be approved at the source of supply before delivery is started. If it is found

after trial that sources of supply for previously approved materials do not produce specified products, the Contractor shall furnish materials from other sources.

4.2 Contractor's Title of Materials

No materials or supplies for the work shall be purchased by the Contractor or by any subcontractor subject to any chattel mortgage or under a conditional sale contract or other agreement by which an interest is retained by the seller. The Contractor warrants that he/she has good title to all materials and supplies used by him/her in the work, free from all liens, claims or encumbrances. **PROVIDED, HOWEVER, NOTHING IN THIS PARAGRAPH SHALL PREVENT THE CITY FROM EXERCISING ALL LIEN RIGHTS THE CITY MAY HAVE IN GOODS PURCHASED BY THE CONTRACTOR WHICH ARE IDENTIFIED TO THE CONTRACT.**

4.3 "Or Equal" Clause

Whenever a material, article or piece of equipment is identified on the plans or in the specification by reference to manufacturer's or vendor's name, trade names, catalog numbers, etc., it is intended merely to establish a standard; and any material, article or equipment of other manufacturers and vendors which will perform adequately the duties imposed by the general design will be considered equally acceptable provided the material, article or equipment so proposed is, in the opinion of the Owner or Owner's designated representative, of equal substance and function. It shall not be purchased or installed by the Contractor without the Owner or Owner's designated representative's written approval.

4.4 Inspection and Testing of Materials

4.4.1 All materials and equipment used in the construction of the project shall be subject to adequate inspection and testing in accordance with accepted standards as designated by the Owner or Owner's designated representative. The Owner or Owner's designated representative shall have the right at all reasonable times to observe and test the work.

4.4.2 Contractor shall make necessary arrangement and provide proper facilities and access for such observation and testing at any location wherever work is in preparation or progress, including but not limited to, access to the project site, shops or yards where materials may be prepared or stored, and the Contractor shall provide space at the project site for safe storage and proper curing of test specimens.

4.4.3 Contractor shall ascertain the scope of any observation which may be contemplated by Owner or Owner's designated representative and shall give at least twenty-four (24) hours advance notice to the project inspector of any required laboratory work, and as to the time each part of the work will be ready for such observation.

4.4.4 Owner or Owner's designated representative may reject any work found to be defective or not in accordance with the contract documents, regardless of the stage of its completion or the time or place of discovery of such

errors, and regardless of whether Owner's designated representative has previously accepted the work through oversight or otherwise. If any work should be covered without approval or consent of the Owner, it must, if requested by Owner or Owner's designated representative, be uncovered for examination at Contractor's expense.

4.4.5 In the event that any part of the work is being fabricated or manufactured at a location where it is not convenient for Owner or Owner's designated representative to make observations of such work or require testing of said work, then in such event, owner or owner's designated representative may require Contractor to furnish Owner or Owner's designated representative with certificates of inspection, testing or approval made by persons competent to perform such tasks at the location where that part of the work is being manufactured or fabricated. All such tests will be in accordance with the methods prescribed by the American Society for Testing and Materials or such other applicable organization as may be required by law or the contract documents.

4.4.6 All geotechnical and materials testing will be paid for by the Owner. The Contractor will be assessed (billed) for any item(s) tested that did not meet the requirements set forth by the Owner or the Owner's designated representative. Payment for the tests will be made by the Owner and billed directly to the Owner by the laboratory. **The Contractor shall be responsible for payment of overtime charges of any testing laboratory personnel or City Inspectors and any standby time of any testing laboratory personnel. Overtime charges of any testing laboratory personnel or City Inspectors and any standby time of any testing laboratory personnel shall be charged to the Contractor on an as accrued basis, and shall be deducted from the next application for payment made by the Contractor.**

4.4.7 If any work which is required to be inspected, tested or approved, is covered up without written approval or consent of the Owner or Owner's designated representative, it must, if requested by the Owner or Owner's designated representative, be uncovered for observation and testing at the Contractor's expense.

4.4.8 The cost of all such inspections, tests and approvals shall be borne by the Contractor unless otherwise provided herein. Any work which fails to meet the requirements of any such tests, inspections or approval, and any work which does not meet the requirements of the contract documents, shall be considered defective. Such defective work shall be corrected at the Contractor's expense.

4.4.9 Neither observations by the Owner or Owner's designated representative, nor inspections, tests or approval made by Owner, Owner's designated representative or other persons authorized under this agreement to make such inspections, tests or approvals shall relieve the Contractor from his obligation to perform the work in accordance with the requirements of the contract documents.

4.5 Rights In and Use of Materials Found on the Work Site

4.5.1 The Contractor with the approval of the City Engineer may use on the project such stone, gravel, sand, or other material determined suitable by the City Engineer, as may be found in the excavation. The Contractor shall replace at his own expense with other acceptable material all of that portion of the excavation material so removed and used which was needed for use in the embankments, backfills, approaches, or otherwise. The Contractor shall not excavate or remove any material from within the project location which is not within the grading limits without written authorization from the City Engineer.

4.5.2 The term "select material", specified on the drawings and/or technical specifications, generally indicates that original material has to undergo some processing in order to satisfy the requirements. Processing may involve screening or blending with other material, in order to meet gradation requirements.

4.6 Handling Materials

All materials shall be handled in such manner as to preserve their quality and fitness for the work and all precautions and requirements shall be exercised, throughout transportation, loading, storage, process, application and installation.

4.7 Disposal of Materials Outside the Work Site

Unless otherwise specified, the Contractor shall make his own arrangements for disposing of waste and excess materials outside the work site and shall pay all costs incurred thereto. The Contractor shall comply with all federal, state and local governmental rules, regulations, laws and ordinances concerning such disposal of waste and excess materials. The Contractor shall dispose of waste materials on designated routes to/and sites approved by the City Engineer, or his designated representative.

4.8 Unacceptable Materials

All materials not conforming to the requirements of the specifications shall be considered as unacceptable and will be rejected and shall be removed by the Contractor immediately from the site of the work. Rejected material shall not be used until the defects have been corrected and approved by the City Engineer.

5.0 CONTRACTOR'S RESPONSIBILITIES AND LEGAL OBLIGATIONS

5.1 Laws to be observed

5.1.1 The Contractor shall keep fully informed of all federal, state, and local laws, ordinances, and regulations and all orders and decrees of bodies or tribunals having any jurisdiction or authority, which in any manner affect those engaged or employed on the work, or which any way affect the conduct of the work.

5.1.2 HE SHALL AT ALL TIMES OBSERVE AND COMPLY WITH ALL SUCH

LAWS, ORDINANCES, REGULATIONS, ORDERS AND DECREES; AND SHALL PROTECT, DEFEND AND INDEMNIFY THE CITY OF EL PASO AND ITS REPRESENTATIVES AGAINST ANY CLAIM OR LIABILITY ARISING FROM OR BASED ON THE VIOLATION OF ANY SUCH LAW, ORDINANCE, REGULATION, ORDER, OR DECREE, WHETHER BY THE CONTRACTOR OR THE CONTRACTOR'S EMPLOYEES.

5.2 Provisions Required by Law Deemed Inserted

Each and every provision of law and clause required by law to be inserted in this contract shall be deemed to be inserted herein and the contract shall be read and enforced as though it were included herein, and if through mistake or otherwise any such provision is not inserted, or is not correctly inserted, then upon the application of either party the contract shall forthwith be physically amended to make such insertion or correction.

5.3 Patented Devices, Materials and Processes

5.3.1 **The Contractor shall defend all suits or claims, hold and save the Owner and its officers, agents, servants and employees harmless from liability of any nature or kind, including cost and expenses for, or on account of, any patented or unpatented invention, process, article or appliance manufactured or used in the performance of the contract, including its use by Owner, unless otherwise specifically stipulated in the contract documents.**

5.3.2 License or Royalty Fees - License or royalty fees for the use of a process which is authorized by the Owner for the Project must be reasonable and must be paid to the holder of the patent, or to his/her authorized licensee by the Contractor.

5.3.3. If the Contractor uses any design, device or materials covered by letter, patent or copyright, he/she shall provide for such use by suitable agreement with the holder or owner of such patented or copyrighted design, device or materials. It is mutually agreed and understood that without exception, the contract prices shall include all royalties or costs arising from the use of such design, device or materials in any way involved in the work.

5.3.4 **THE CONTRACTOR AND/OR HIS/HER SURETY SHALL DEFEND ALL SUITS OR CLAIMS AND SHALL INDEMNIFY AND HOLD AND SAVE HARMLESS THE OWNER OF THE PROJECT FROM ANY AND ALL CLAIMS FOR INFRINGEMENT UPON OR VIOLATION OF ANY PATENT, COPYRIGHT, TRADE SECRET OR OTHER PROPRIETARY RIGHT AT ANY TIME DURING THE PROSECUTION OF THE WORK OR AFTER COMPLETION OF THE WORK, AND SHALL PAY ANY JUDGMENT (INCLUDING ALL COURT COSTS, EXPERT FEES, AND ATTORNEYS FEES) RENDERED AGAINST THE OWNER AS A RESULT OF SUCH CLAIMS.**

5.4 Public Convenience and Safety

The Contractor shall at all times so conduct work as to assure the least possible disruption of traffic. The safety and convenience of the general public and the residents along the project and the protection of persons and property shall be provided for by the Contractor as specified under Paragraph 2.6 herein.

5.5 Use of Explosives

5.5.1 When the use of explosives is necessary for the prosecution of the work, the Contractor shall observe all local, state and federal laws in purchasing and handling explosives, including but not limited to the acquiring of all required permits. The Contractor shall take all necessary precaution to protect completed work, neighboring property, water lines or other underground structures. Where there is danger to structures or property from blasting, the charges shall be reduced and the materials shall be covered with suitable timber, steel or rope mats.

5.5.2 The Contractor shall notify all owners of public utility property of his/her intention to use explosives at least eight (8) hours before blasting is done close to such property. Any supervision or direction of use of explosives by the Owner or Owner's designated representative does not in any way reduce the responsibility of the Contractor and/or his/her surety for damages that may be caused by such use.

5.6 Protection of Work and Property

5.6.1 In the event of temporary suspension of work, or during inclement weather, or whenever the Owner or Owner's designated representative shall direct, the Contractor will, and will cause his/her subcontractors, to protect carefully his/her and their work and materials against damage or injury from the weather.

5.6.2 If, in the opinion of the Owner or Owner's designated representative, any work or materials shall have been damaged or injured by reason of failure on the part of the Contractor or any of his/her subcontractors to so protect his work or materials, all such work or materials shall be removed or replaced at the expense of the Contractor.

5.7 Protection of Work and Property - Emergency

5.7.1 The Contractor shall at all times safely guard the Owner's property from injury or loss in connection with this contract. The Contractor shall at all times safely guard and protect his/her own work and that of adjacent property from damage.

5.7.2 In case of an emergency which threatens loss or injury of property and/or safety of life, the Contractor will be allowed to act, without previous instructions from the Owner or Owner's designated representative, in a diligent manner. However, the Contractor shall notify the Owner or Owner's designated representative immediately thereafter. Any claim for

compensation by the Contractor due to such extra work shall be promptly submitted to the Owner or Owner's designated representative for approval.

5.7.3 The safety precautions taken shall be the sole responsibility of the Contractor in his sole discretion as an Independent Contractor.

5.7.4 Inclusion of this paragraph in the Agreement, as well as any notice which may be given by the Owner or the Owner's designated representative concerning omissions under this paragraph as the work progresses, are intended as reminders to the Contractor of his duty and shall not be construed as any assumption of duty to supervise safety precautions by the Contractor or any of his subcontractors.

5.7.5 The amount of reimbursement claimed by the Contractor on account of any emergency action shall be determined in the manner provided in Paragraph 2.5 herein.

5.8 Protection of Work and Property - Monitor Wells

5.8.1. The Contractor shall be vigilant at all times for ground water monitor wells within public rights-of-way or on adjacent property which may belong to the Owner or to other agencies which have installed wells with the Owner's permission. Such wells may or may not be shown on the plans for the project.

5.8.2 The Contractor shall inspect all rights-of-way and property within the limits of the project and shall promptly report to the Owner's representative any monitor wells or devices, caps or other objects that might be monitor wells.

5.8.3 The Contractor may not disturb any monitor well in any way but shall protect them from disturbance or damage and shall schedule and carry out operations to prevent any disturbance of or damage to monitor wells.

5.8.4 Should the Contractor discover a monitor well during construction, it shall immediately be reported to the Owner's representative and shall be protected from any disturbance or from further disturbance.

5.8.5 Should it be necessary to change the elevation of a monitor well head, the Contractor shall so notify the Owner's representative who will make appropriate arrangements with a licensed well driller to adjust the well head. The Contractor shall work closely with the well driller and shall carry out the driller's instructions on behalf of the Owner.

5.9 Mutual Responsibility of Contractor

If, through acts of neglect on the part of the Contractor, any other contractor or any subcontractor shall suffer loss or damage on the work, the Contractor agrees to settle with such other contractor or subcontractor by agreement or arbitration if such other contractor or subcontractor will so settle. If such other contractor or subcontractor shall assert any claim against the Owner on account of any damage alleged to have been sustained, the Owner shall notify the Contractor, who shall indemnify and save

harmless the Owner against any such claim.

5.10 **INDEMNIFICATION**

Contractor or its insurer will INDEMNIFY, DEFEND AND HOLD the City, its officers, agents and employees, HARMLESS FOR AND AGAINST ANY AND ALL CLAIMS, CAUSES OF ACTION, LIABILITY, DAMAGES OR EXPENSE, (INCLUDING BUT NOT LIMITED TO ATTORNEY FEES AND COSTS) FOR ANY DAMAGE TO OR LOSS OF ANY PROPERTY, OR ANY ILLNESS, INJURY, PHYSICAL OR MENTAL IMPAIRMENT, LOSS OF SERVICES, OR DEATH TO ANY PERSON ARISING OUT OF OR RELATED TO THIS AGREEMENT, even where such damage, injury, loss, illness, physical or mental impairment, loss of services, or death results from or involves NEGLIGENCE or allegations of negligence on the part OF THE CITY, its officers, agents, or employees. Without modifying the conditions of preserving, asserting or enforcing any legal liability against the City as required by the City Charter or any law, the City will promptly forward to Contractor every demand, notice, summons or other process received by the City in any claim or legal proceeding contemplated herein. Contractor will 1) investigate or cause the investigation of accidents or occurrences involving such injuries or damages; 2) negotiate or cause to be negotiated the claim as the Contractor may deem expedient; and 3) defend or cause to be defended on behalf of the City all suits for damages even if groundless, false or fraudulent, brought because of such injuries or damages. Contractor will pay all judgments finally establishing liability of the City in actions defended by Contractor pursuant to this section along with all attorneys' fees and costs incurred by the City including interest accruing to the date of payment by Contractor, and premiums on any appeal bonds. The City, at its election will have the right to participate in any such negotiations or legal proceedings to the extent of its interest. The City will not be responsible for any loss of or damage to the Contractor's property from any cause. [Revised 04-15-99].

5.11 **Insurance**

5.11.1 The Contractor shall not commence work under this contract until he/she has obtained all the insurance required under this paragraph and such insurance has been approved by the Owner, nor shall the Contractor allow any subcontractor to commence work on his/her subcontract until the insurance required of the subcontractor has been so obtained and approved.

5.11.2 **General Insurance Requirements**.

The following requirements apply to all insurance required in this section 5.11 unless specifically stated otherwise.

5.11.2.1 **Texas Insurance Requirement:** The insurance required in this section 5.11 shall be written by an accredited insurance company under the supervision of the Board of Insurance Commissioners of the State of Texas.

5.11.2.2 **Evidence of Compliance:** Evidence of compliance with these insurance requirements shall be considered as having been met when copy of the insurance policy or a certificate of insurance has been filed with and approved by the Owner which shall be prior to the execution of the construction contract. The Contractor shall furnish Owner with documentation from the insurer showing the type, amount, class of operations covered, effective dates and date of expiration of policies.

5.11.2.3 **Additional Insured and Notice Endorsements Required:** The insurance policies shall include an endorsement that the Owner is named as an additional insured [except for worker's compensation insurance] to the full amount of the policy limits and that the Owner shall be notified at least thirty days in advance in the event the policy or policies are canceled and ten days in advance for non-payment of policy premiums. The endorsement shall contain substantially the following statement: "The insurance included within this policy shall not be cancelled or materially altered except after thirty (30) consecutive calendar days [ten (10) consecutive calendar days for non-payment of policy premiums written notice by certified mail or intent to cancel or materially alter said insurance has been provided to owner [additional insured]." Endorsements stating that the insurer will "endeavor to notify" and/or "failure to notify shall impose no obligation or liability upon the (insurance) company" are not acceptable. Failure by Contractor to provide proof of insurance coverage for itself or its subcontractors shall delay release of pending payments. The required endorsement shall be provided to the Owner in addition to the certificates of insurance prior to the execution of the construction contract.

5.11.2.4 **Maintaining Insurance:** The contractor shall maintain said insurance with a solvent insurance company authorized to do business in Texas. The policy shall provide that the insurer will defend against all claims and lawsuits which arise and will pay any final judgment of a court of competent jurisdiction against the City, its officers, agents, servants or employees and Contractor to keep the policies of insurance in full force and effect throughout the term of the permit shall be grounds for termination of the construction contract.

5.11.2.5 **Time Insurance Policies Shall Remain in Effect:** All insurance policies required herein shall remain in effect until final payment and at all times thereafter when Contractor is correcting, removing or replacing defective work in accordance with paragraph 5.16 of these General Conditions.

5.11.3 Commercial General Liability, Property Damage Liability and Vehicle Liability Insurance.

The Contractor shall procure and shall maintain during the life of this contract such

Commercial General Liability, Property Damage Liability and Vehicle Liability Insurance as shall protect him and any subcontractor performing work covered by the Contractor from claims for damages for personal injury, including accidental death, as well as from claims for property damages, which may arise from operations under this contract, whether such operations be by himself or by any subcontractor or by anyone directly or indirectly employed by either of them, and the minimum limits of liability and coverages shall be as follows:

5.11.3.1 Commercial General

Liability Bodily Injury	$1,000,000.00 each person
Property Damage	$1,000,000.00 each occurrence
General Aggregate	$2,000,000.00

5.11.3.2 Vehicle Liability

Combined Single Limit	$1,000,000.00

5.11.4 **Subcontractor's Commercial General Liability and Property Damage Insurance and Vehicle Liability Insurance**.

The Contractor shall either,

5.11.4.1 Require each of his/her subcontractors to procure and to maintain during the life of his/her subcontract, Subcontractor's Commercial General Liability and Property Damage Insurance and Vehicle Liability Insurance in the amounts specified above; or

5.11.4.2 Insure the activities on his/her policy, specified in subparagraph 5.11.2 hereof.

5.11.5 **Scope of Insurance and Special Hazards**.

The insurance required under Subparagraphs 5.11.2 and 5.11.4 hereof shall provide adequate protection for the Contractor and his/her subcontractors, respectively, against damage claims which may arise from operations under this contract whether such operations are by the insured or by anyone directly or indirectly employed by him/her, and also against any of the special hazards which may be encountered herein;

HAZARD: N / A AMOUNT: N / A

5.11.6 **Builder's Risk Insurance (Fire and Extended Coverage)**.

5.11.6.1 This insurance shall be required only for building projects, as opposed to street, bridge and drainage projects.

5.11.6.2 Until the project is completed and accepted by the Owner, the Contractor is required to maintain Builder's Risk Insurance (fire and extended coverage) on a one hundred percent (100%) completed value basis on the insurable portion of the project for the benefit of the Owner, the Contractor and subcontractor, as their interests may appear. The Contractor shall not

include any costs for Builder's Risk Insurance (fire and extended coverage) premiums during construction unless the Contractor is required to provide such insurance; however, this provision shall not release the Contractor from his/her obligation to complete, according to plans and specifications, the project covered by the contract, and the Contractor and his/her Surety shall be obligated to full performance of the Contractor's undertaking.

5.12 **Texas Workers' Compensation Requirements**

5.12.1 **Definitions:**

5.12.1.1 Certificate of coverage ("certificate") -- A copy of a certificate of insurance, a certificate of authority to self-insure issued by the Commission, or a coverage agreement (TWCC-81, TWCC-82, TWCC-83, or TWCC-84), showing statutory workers' compensation insurance coverage for the person's or entity's employees providing services on a project, for the duration of the project.

5.12.1.2 Duration of the project -- includes the time from the beginning of the work on the project until the contractor's/person's work on the project has been completed and accepted by the governmental entity.

5.12.1.3 Persons providing services on the project ("subcontractor") -- includes all persons or entities performing all or part of the services the contractor has undertaken to perform on the project, regardless of whether that person contracted directly with the contractor and regardless of whether that person has employees. This includes, without limitation, independent contractors, subcontractors, leasing companies, motor carriers, owner-operators, employees of any such entity or employees of any entity which furnishes persons to provide services on the project. "Services" include, without limitation, providing, hauling, or delivering equipment or materials, or providing labor, transportation, or other service related to a project. "Services" does not include activities unrelated to the project such as food/beverage vendors, office supply deliveries, and delivery of portable toilets.

5.12.2 The Contractor shall provide coverage, based on proper reporting of classification codes and payroll amounts and filing of any coverage agreements, which meets the statutory requirements of Texas Labor Code, Section 401.011(44) for all employees of the contractor providing services on the project, for the duration of the project.

5.12.2.1 Special Endorsement: The workers compensation policy provided by the contractor shall be endorsed to provide that the insurer waives any right of subrogation it may acquire against the owner, the Architect/Engineer of record, the Construction Manager, where applicable, by reason of any payment made in

account of injury, including death resulting there from, sustained by any employee of the insured. The contractor must provide the endorsement prior to execution of the contract.

5.12.3 The Contractor must provide a certificate of coverage to the governmental entity prior to being awarded the contract.

5.12.4 If the coverage period shown on the contractor's current certificate of coverage ends during the duration of the project, the contractor must, prior to the end of the coverage period, file a new certificate of coverage with the governmental entity showing that coverage has been extended.

5.12.5 The Contractor shall obtain from each person providing services on a project, and provide to the governmental entity:

5.12.5.1 A Certificate of coverage, prior to that person beginning work on the project, so the governmental entity will have on file certificates of coverage showing coverage for all persons providing services on the project; and

5.12.5.2 No later than seven days after receipt by the contractor, a new certificate of coverage showing extension of coverage, if the coverage period shown on the current certificate of coverage ends during the duration of the project.

5.12.6 The Contractor shall retain all required certificates of coverage for the duration of the project and for one year thereafter.

5.12.7 The Contractor shall notify the governmental entity in writing by certified mail or personal delivery, within 30 days after the contractor knew or should have known, of any change that materially affects the provision of coverage of any person providing services on the project.

5.12.8 The Contractor shall post on each project site a notice, informing all persons providing services on the project that they are required to be covered, and stating how a person may verify coverage and report failure of coverage.

5.12.9 This notice does not satisfy other posting requirements imposed by the Act or other Commission rules. This notice must be printed with a title in at least 30 point bold type and text in at least 19 point normal type, and shall be in both English and Spanish and any other language common to the worker population. The text for the notices shall be the following text provided by the Commission on the sample notice, without any additional words or changes:

REQUIRED WORKERS' COMPENSATION COVERAGE

"The law requires that each person working on this site or providing services related to this construction project must be covered by workers' compensation insurance. This includes persons providing, hauling, or

delivering equipment or materials, or providing labor or transportation or other service related to the project, regardless of the identity of their employer or status as an employee."
"Call the Texas Workers' Compensation Commission at (800) 372-7713 or (512) 804-4000 to receive information on the legal requirement for coverage, to verify whether your employer has provided the required coverage, or to report an employer's failure to provide coverage."; and

5.12.10 The Contractor shall contractually require each person with whom it contracts to provide services on a project, to:

5.12.10.1 Provide coverage, based on proper reporting of classification codes and payroll amounts and filing of any coverage agreements, which meets the statutory requirements of Texas Labor Code, Section 401.011 (44) for all of its employees providing services on the project, for the duration of the project;

5.12.10.2 Provide to the contractor, prior to that person beginning work on the project, a certificate of coverage showing that coverage is being provided for all employees of the person providing services on the project, for the duration of the project;

5.12.10.3 Include in all contracts to provide services on the project the language in Subsection 5.12.13.3 herein;

5.12.10.4 Provide the contractor, prior to the end of the coverage period, a new certificate of coverage showing extension of coverage, if the coverage period shown on the current certificate of coverage ends during the duration of the project:

5.12.10.5 Obtain from each other person with whom it contracts, and provide to the contractor:

5.12.10.5.1 A certificate of coverage, prior to the other person beginning work on the project; and

5.12.10.5.2 A new certificate of coverage showing extension of coverage, prior to the end of the coverage period, if the coverage period shown on the current certificate of coverage ends during the duration of the project;

5.12.10.6 Retain all required certificates of coverage on file for the duration of the project and for one year thereafter;

5.12.10.7 Notify the governmental entity in writing by certified mail or personal delivery, within 10 days after the person knew or should have known, of any change that materially affects the provision of coverage of any person providing services on the project; and

5.12.10.8 Contractually require each person with whom it contracts, to perform as required by Paragraphs 5.12.10.1 through 5.12.10.8,

with the certificates of coverage to be provided to the person for whom they are providing services.

5.12.11 By signing this contract or providing or causing to be provided a certificate of coverage, the contractor is representing to the governmental entity that all employees of the contractor who will provide services on the project will be covered by workers' compensation coverage for the duration of the project, that the coverage will be based on proper reporting of classification codes and payroll amounts, and that all coverage agreements will be filed with the appropriate insurance carrier or, in the case of a self-insured, with the Commission's Division of Self-Insurance Regulation. Providing false or misleading information may subject the contractor to administrative penalties, criminal penalties, civil penalties, or other civil actions.

5.12.12 The contractor's failure to comply with any of these provisions is a breach of contract by the contractor which entitles the governmental entity to declare the contract void if the contractor does not remedy the breach within ten days after receipt of notice of breach from the governmental entity.

5.12.13 A person providing services on a project, other than a contractor, shall:

5.12.13.1 Provide coverage for its employees providing services on a project, for the duration of the project based on proper reporting of classification codes and payroll amounts and filing of any coverage agreements;

5.12.13.2 Provide a certificate of coverage as required by its contract to provide services on the project, prior to beginning work on the project;

5.12.13.3 Have the following language in its contract to provide services on the project:

"By signing this contract or providing or causing to be provided a certificate of coverage, the person signing this contract is representing to the governmental entity that all employees of the person signing this contract who will provide services on the project will be covered by workers' compensation coverage for the duration of the project, that the coverage will be based on proper reporting of classification codes and payroll amounts, and that all coverage agreements will be filed with the appropriate insurance carrier or in the case of a self-insured, with the Commission's Division of Self-Insurance Regulation. Providing false or misleading information may subject the contractor to administrative penalties, criminal penalties, civil penalties, or other civil actions."

5.12.14 Provide the person for whom it is providing services on the project, prior to the end of the coverage period shown on its current certificate of coverage, a new certificate showing extension of coverage, if the coverage period shown on the certificate of

coverage ends during the duration of the project;

5.12.15 Obtain from each person providing services on a project under contract to it, and provide as required by its contract:

5.12.15.1 A certificate of coverage, prior to the other person beginning work on the project; and

5.12.15.2 Prior to the end of the coverage period, a new certificate of coverage showing extension of the coverage period, if the coverage period shown on the current certificate of coverage ends during the duration of the project;

5.12.16 Retain all required certificates of coverage on file for the duration of the project and for one year thereafter;

5.12.17 Notify the governmental entity in writing by certified mail or personal delivery, of any change that materially affects the provision of coverage of any person providing services on the project and send the notice within 30 days after the person knew or should have known of the change; and

5.12.18 Contractually require each other person with whom it contracts to:

5.12.18.1 Provide coverage based on proper reporting of classification codes and payroll amounts and filing of any coverage agreements for all of its employees providing services on the project, for the duration of the project;

5.12.18.2 Provide a certificate of coverage to it prior to that other person beginning work on the project;

5.12.18.3 Include in all contracts to provide services on the project the language in Subsection 5.12.13.3 herein.

5.12.18.4 Provide, prior to the end of the coverage period, a new certificate of coverage showing extension of the coverage period, if the coverage period shown on the current certificate of coverage ends during the duration of the project;

5.12.18.5 Obtain from each other person under contract to it to provide services on the project, and provide as required by its contract:

5.12.18.5.1 A certificate of coverage, prior to the other person beginning work on the project; and

5.12.18.5.2 Prior to the end of the coverage period, a new certificate of coverage showing extension of the coverage period, if the coverage period shown on the current certificate of coverage ends during the duration of the contract;

5.12.18.6 Retain all required certificates of coverage on file for the duration of the project and for one year thereafter;

5.12.18.7 Notify the governmental entity in writing by certified mail or personal delivery, within 30 days after the person knew or should have known, of any change that materially affects the provision of coverage of any person providing services on the project; and

5.12.18.8 Contractually require each person with whom it contracts, to perform as required by Paragraphs 5.12.1 through 5.12.9, with the certificate of coverage to be provided to the person for whom they are providing services.

5.13 **Contract Security.** In accordance with Chapter 2253, Texas Government Code, the City of El Paso requires the following for all public works contracts:

5.13.1 The Contractor shall furnish a **performance bond** in an amount at least equal to one hundred percent (100%) of the contract price as security for the faithful performance of this contract and such performance bonds shall be issued for a duration sufficient to cover all warranty periods required by the construction contract.

5.13.2 A **payment bond** in an amount not less than one hundred percent (100%) of the contract price, or in a penal sum not less than that prescribed by the state, territorial or local law, as security for the payment of all persons performing labor on the project under this contract and furnishing materials in connection with this contract.

5.13.2.1 In accordance with Section 3503.004 of the TEXAS INSURANCE CODE, if a Performance or Payment bond is in an amount of excess of ten percent (10%) of the surety's capital and surplus, the City of El Paso will require, as a condition to accepting the bond(s), a written certification from the surety that the surety has reinsured the portion of the risk that exceeds ten percent (10%) of the surety's capital and surplus with one or more reinsurers who are duly authorized, accredited or trusteed to do business in the State of Texas. If any portion of the surety's obligation is reinsured, the amount reinsured may not exceed 10% of the reinsurer's capital and surplus.

5.13.2.2 The performance bond and the payment bond shall be in a form approved by the Owner. A copy of the payment bond provided for the construction project shall clearly and prominently display on the bond or on an attachment to the bond:

(a) The name, mailing address, physical address and telephone number, including the area code, of the surety company to which any notice of claim should be sent: or

(b) The toll-free telephone number maintained by the Texas Department of Insurance under Subchapter B, Chapter 521.051 Insurance Code, and a statement that the address of the surety company to which any notice of claim should be sent may be obtained from the Texas Department of Insurance by calling the

toll-free telephone number.

5.13.2.2.1 The surety company providing the payment bond shall designate an agent resident who resides within the County of El Paso and to whom any requisite notices may be delivered and with whom service of process may be rendered in matters arising out of suretyship.

5.13.2.3 Should the surety exercise its right to take over and perform the contract in accordance with Section 6.9 of the Construction Contract General Conditions, the surety shall submit or require the contractor to submit, a payment bond and performance bond that satisfies the requirements set forth in paragraph 5.13.1 and 5.13.2 above.

5.13.2.4 A bond provided pursuant to these General Conditions may be executed only by a surety company that is authorized to write surety bonds in Texas. If the amount of the bond exceeds $100,000, the surety company must also:

(a) hold a certificate of authority from the United States secretary of the treasury to qualify as a surety on obligations permitted or required under federal law; or

(b) have obtained reinsurance for any liability in excess of $100,000 from a reinsurer that:

(1) is an authorized reinsurer in this state; and

(2) holds a certificate of authority from the United States secretary of the treasury to qualify as a surety or reinsurer on obligations permitted or required under federal law.

To determine whether the surety on the bond or the reinsurer holds a certificate of authority from the United States secretary of the treasury, a party may conclusively rely on the list published in the Federal Register by the United States Department of Treasury, covering the date on which the bond was executed, of the companies holding certificates of authority as acceptable sureties on federal bonds and as acceptable reinsuring companies.

5.14 **Additional or Substitute Bond**

5.14.1 If at any time the Owner, for justifiable cause, shall be or become dissatisfied with any Surety or Sureties upon the Performance or Payment Bonds, the Contractor shall within five (5) consecutive work days after notice from the Owner to do so, substitute an acceptable bond (or bonds) in such form and sum and signed by such other Surety or Sureties as may be satisfactory to the Owner. The premiums on such bond (or bonds) shall be paid by the Contractor at no additional costs to the Owner.

5.14.2 No further payments to the contractor shall be deemed due nor shall be made until the new Surety or Sureties shall have furnished such an acceptable bond to the Owner.

5.15 **Contractor's Obligations**

5.15.1 The Contractor shall, and will in a good workmanlike manner, do and perform all work, and provide and pay for all materials, labor, tools, equipment, machinery, water, electricity, transportation, superintendence, temporary construction and all services and facilities necessary to complete and deliver the work within the specified time, in accordance with the provisions of the contract documents, plans and drawings, and directions of the Owner's designated representative.

5.15.2 If required, the Contractor shall furnish, erect, maintain and remove temporary works or construction plant. The Contractor shall observe, comply with and be subject to all terms, conditions, requirements and limitations of the contract and specifications, and shall do, carry on and complete the entire work to the satisfaction of the Owner's designated representative and the Owner. It is expressly required that all work performed by the Contractor shall comply with any and all applicable City Building Codes.

5.15.3 The Contractor upon completion of the project shall provide to the Owner one complete set of original drawings ("As Built Plans") reflecting all changes incorporated into the project.

5.16 **Correction of Work**

5.16.1 All work, all materials, whether incorporated in the work or not, all processes of manufacture and all methods of construction shall be at all times and places subject to the inspection of the Owner or Owner's designated representative, who shall be the final judge of the quality and suitability of the work, materials, processes of manufacture and methods of construction for the purpose for which they are used. Should they fail to meet the Owner or Owner's designated representative's approval, they shall be forthwith reconstructed, made good, replaced and/or corrected, as the case may be, by the Contractor at his/her own expense.

5.16.2 Rejected material shall immediately be removed from the site. If in the opinion of the Owner or Owner's designated representative, it is undesirable to replace any defective or damaged materials or to construct, reconstruct, or correct any portion of the work injured or not performed in accordance with the contract documents, the compensation to be paid to the Contractor hereunder shall be reduced by such amount as in the judgment of the Owner or Owner's designated representative shall be equitable.

5.17 **truction**

5.17.1 The Contractor warrants to the Owner that materials and equipment furnished under the contract will be of good quality and new unless

otherwise required or permitted by the contract documents, that the work will be free from defects not inherent in the quality required or permitted, and that the work will conform to the requirements of the contract documents. Work not conforming to these requirements, including substitutions not properly approved and authorized, may be considered defective.

5.17.2 Neither the final certificate of payment nor any provisions in the contract documents, nor partial or entire occupancy of the premises by the Owner shall constitute an acceptance of work not done in accordance with the contract documents or relieve the Contractor of liability in respect to any express warranties or responsibility for faulty materials or workmanship. The Contractor shall remedy any defects in the work and pay for any damage to other work resulting there from which shall appear within a period of one (1) year from the date of final acceptance of the work unless a longer period is specified, The Owner will give notice of observed defects with reasonable promptness.

5.18 Use and Occupancy Prior to Acceptance by Owner

The Contractor agrees to the use and occupancy of a portion or units of the project by the Owner prior to completion and final acceptance. In doing so, the Owner will endeavor not to interfere with any work being done by the Contractor or any subcontractors employed by him. Such use and occupancy by the Owner shall not relieve the Contractor of any requirements under this Contract, including but not limited to the final cleanup of punch list items.

5.19 Contractor's Responsibilities for Utility Property and Services

5.19.1 **It is the responsibility of the contractor disturbing the earth's surface to notify the operators of the underground facilities that there is planned work in the area near those lines. Before digging, blasting, drilling, grading, pipe positioning and moving earth, it is imperative that the Contractor call the Texas Excavation Safety System (TESS) at 1-800-344-8377. However, the Contractor's responsibilities are not fulfilled solely by placement of a phone call to the notification center about intended excavation; this is merely the first step in the location process. The directions and procedures outlined in the following paragraphs must also be adhered to.**

5.19.2 **Prior to commencing work, the Contractor shall make arrangements to protect the properties of water, sewer, gas, cable, telephone, and power companies, or other property from damage that could result in considerable expense, loss, or inconvenience.**

5.19.3 **After the markings have been made, excavators are expected to maintain a minimum clearance of two feet (24 inches) plus the width of the line between marked and unexposed facilities and the cutting edge or point of any power-operated excavating or earth-moving equipment. IF EXCAVATION IS REQUIRED WITHIN THIS DISTANCE HORIZONTALLY OF ANY MARKED UTILITY, THE EXCAVATION**

SHOULD BE PERFORMED VERY CAREFULLY WITH HAND TOOLS AND WITHOUT DAMAGE.

5.19.4 **The depth of underground facilities varies due to changing soil conditions and other variables. It is the responsibility of the excavator to determine the facility's exact depth and location by safe and acceptable means within the marked facility area.**

5.19.5 **When excavation operations approach the estimated location of underground installations, the exact location of the installations shall be determined by safe and acceptable means.**

5.19.6 **While the excavation is open, underground installations shall be protected, supported or removed as necessary to safeguard employees.**

5.19.7 **The Contractor shall cooperate with the utility owners in the removal and rearrangement of any underground or overhead utility lines or facilities to minimize interruption to service and duplication of work by the utility owners.**

5.19.8 **In the event utility services are interrupted as a result of accidental breakage, the Contractor shall promptly notify the proper authorities and cooperate with them until service has been restored. Work undertaken around fire hydrants shall not commence until provisions for continued service have been made and approved by the local fire authority.**

5.20 Obligation for Temporary Electrical Power

The Contractor shall be responsible for obtaining temporary electrical power to the Project site and providing the temporary distribution system necessary to accomplish the construction of the Project. The Contractor shall be responsible for all coordination necessary with the El Paso Electric Company to secure and maintain temporary electrical power to the Project site and to ensure that any power necessary for construction is available at the time needed by the Contractor. This responsibility includes but is not limited to, the locating of and accessing to the nearest existing power source, or in the alternate, the providing of generators as required for construction. All charges for temporary electrical power shall be borne by the Contractor, including but not limited to meter deposits for temporary power, connect/disconnect charges, permit charges, service terminal, (meter loops, meter sockets, service entrance switch) and all costs of electrical energy and meter charges.

5.21 Environmental Protection

5.21.1 The Contractor shall comply with all federal, state, and local laws and regulations controlling pollution of the environment. Necessary precautions shall be taken to prevent pollution of land, soils, streams, lakes, ponds, and reservoirs with fuels, oils, bitumens, chemicals, or other harmful and hazardous materials and to prevent pollution of the atmosphere from particulate and gaseous matter.

5.21.2 Fording of live streams shall not be permitted unless the Contractor's plan for such operation meets the approval of the City Engineer and results in minimum siltation to the stream. Unless approved by the City Engineer, mechanized equipment shall not be operated in live streams except as required to construct channel changes and temporary or permanent structures that are part of the contract.

5.21.3 When work areas or pits are located in or adjacent to live streams, such areas shall be separated from the main stream by a dike or barrier to keep sediment from entering a flowing stream. Care shall be taken during the construction and removal of such barriers to minimize siltation of the stream.

5.21.4 Water from aggregate washing or other operations containing sediment shall be treated by filtration, settling basins, or other means sufficient to reduce the sediment content to not more than that of the stream or lake into which it is discharged.

5.22 Texas Pollutant Discharge Elimination System (TPDES) Requirements

5.22.1 TPDES Construction General Permit, Permit No. TXR150000 was approved, signed and became effective on **March 5, 2013**.

5.22.2 The Texas Pollutant Discharge Elimination System (TPDES) program implements the federal National Pollutant Discharge Elimination System (NPDES) program in the state of Texas. The EPA Region 6 (located in Dallas) has administered the Phase I storm water general permit for construction activities disturbing 5 or more acres within the state of Texas until the TPDES permit has been issued. On **March 5, 2013** the TCEQ became the permitting authority for these discharges. This general permit also covers storm water discharges from Phase II construction activities that disturb at least 1 acre and less than 5 acres. Further information may be obtained from the Executive Director's Response to Comments and the TXR 150000 Fact Sheet.

5.22.3 Large Construction Activity –Construction activities including clearing, grading and excavation that result in land disturbance of equal to or greater than five (5) acres of land. Large construction activity also includes the disturbance of less than five (5) acres of total land area that is part of a larger common plan of development or sale if the larger common plan will ultimately disturb equal to or greater than five (5) acres of land. Large construction activity does not include routine maintenance that is performed to maintain the original line and grade, hydraulic capacity, and original purpose of a ditch, channel, or other similar storm water conveyance. Large construction activity does not include the routine grading of existing dirt roads, asphalt overlays of existing roads, the routine clearing of existing right of ways, and similar maintenance activities. Construction projects that started after the issuance of the TPDES general permit and that will disturb 5 or more acres must be authorized under TPDES General Permit issued on **March 5, 2013** prior to commencement or construction activities.

5.22.3.1 Obtain a copy of the TCEQ CGP (TPDES Permit No. TXR150000).

5.22.3.2 Develop and implement a storm water pollution prevention plan (SWP3) and submit a copy of SWP3 as per **15.20.110 Storm Water Discharge from Construction Activities** to the City of El Paso Development Services Department for review and approval.

5.22.3.3 Complete and submit the (NOI) Notice of Intent form to the TCEQ State agency prior to the commencement of construction. Submit a copy of (NOI) form and the City of El Paso Storm Water Pollution Prevention Plan (SWP3) and application form to the City of El Paso Development Services Department along with the fee.

5.22.3.4 Submit a Notice of Termination (NOT) once the site has reached final stabilization. NOTE: This is a condition precedent to obtaining Final Payment under these contract documents. Submit a copy of the State NOT (Notice of Termination) form to the Development Services Department.

5.22.4 Small Construction activity –Construction activities including clearing, grading, and excavating that result in land disturbance of equal to or greater than one (1) acre to less than five (5) acres of land. Small construction activity also includes the disturbance of less than one (1) acre of total land area that is part of a larger common plan of development of sale if the larger common plan will ultimately disturb equal to or greater than (1) and less than (5) acres of land. Small construction activity does not include routine maintenance that is performed to maintain the original line and grade, hydraulic capacity, and original purpose of a ditch, channel, or other similar storm water conveyance. Small construction activity does not include the routine grading of existing dirt roads, asphalt overlays of existing roads, the routine clearing of existing right- of- ways, and similar maintenance activities.

5.22.4.1 Obtain a copy of TECQ CGP (TPDES Permit No. TXR 150000).

5.22.4.2 If construction site does not qualify for the time frame required for Attachment 1 of the General Permit for small construction sites, then, the operator needs to develop and implement a storm water pollution prevention plan (SWP3) and submit the SWP3 to Development Services for review and approval.

5.22.4.3 Complete and post the Construction Site Notice Attachment I or Attachment II of the General Permit. Submit a copy to the City of El Paso Development Services Department.

5.22.4.4 Before construction begins:

5.22.4.4.1 If the site qualifies, complete and submit a Low

Rainfall Erosivity Waiver Form to TCEQ. Submit a copy to City of El Paso Development Services Department.

5.22.4.4.2 Complete and post the Construction Site Notice Attachment I or Attachment II of the General Permit. Submit a copy to the City of El Paso Development Services Department for review.

5.22.5 Small sites. For construction projects that will disturb less than one (1) acre and overall common plan is less than one (1) acre, no permit is required. TCEQ or the City of El Paso can also designate construction activities disturbing less than one acre for inclusion in the construction General Permit based on the potential for contributing to a violation of a water quality standard or for significant contribution of pollutants to waters of the United States.

5.22.5.1 NOTE: If the construction activity develops into a larger project, then permit coverage may be required at that time based on the total number of acres that will be disturbed: 5 or More Acres or 1 to Less Than 5 Acres.

5.23 Prevailing Wage Rates and Wage Rate Penalty

5.23.1 The Contractor and any subcontractor under him shall not pay less than the general prevailing wage rates contained herein, to all laborers, workmen and mechanics employed by them in the execution of this contract. When multiple wage rates are used (e.g. Federal wage rates and City wage rates) featuring similar job classifications, the higher wage within the relevant construction type shall be paid.

5.23.2 Pursuant to Chapter 2258, Texas Government Code, the Contractor shall forfeit as a penalty to the City of El Paso Sixty Dollars ($60.00) for each laborer, workman or mechanic employed, for each calendar day, or portion thereof such laborer, workman or mechanic is paid less than the said stipulated rates for any work done under said contract, by him, or by any subcontractor under him.

5.23.3 No worker shall be discharged by the Contractor or Subcontractor or in any other manner discriminated against because such worker has filed an inquiry or complaint, has instituted or caused to be instituted any legal or equitable proceeding or has testified or is about to testify in any such proceeding under or relating to the prevailing wage rates for this project.

5.23.4 Withholding

5.23.4.1 **The El Paso City Government, shall upon its own action withhold or cause to be withheld from the contractor under this contract or any other contract which is held by the same prime contractor, so much of the accrued payments or advances as may be considered necessary to pay laborers and mechanics, including apprentices, trainees, and**

helpers, employed by the contractor or any subcontractor the full amount of wages required by the contract.

5.23.4.2 **In the event of failure to pay any laborer or mechanic including any apprentice, trainee, or helper, employed or working on the site of the work all or part of the wages required by the contract, the El Paso City Government, may, after written notice to the contractor, take such action as may be necessary to cause the suspension of any further payment, advance, or guarantee of funds until such violations have ceased.**

5.24 Apprentices

5.24.1 Information relating to the apprenticeship program, use of apprentices and trades shall be submitted prior to the start of the work of the applicable occupations listed below. City construction contracts require that the construction contractors performing work for the City for such contract shall participate in a United States Department of Labor ("DOL") certified apprenticeship program when the work required under the contract includes work that must be performed by any of the apprenticeable occupations listed in the City's apprenticeship program adopted September 24, 2013, as amended, and the work involving such apprenticeable occupation has a value of **fifty thousand dollars** or more. Prior to the start of the work of the applicable apprenticeable occupations listed below the contractor or the applicable subcontractor through the prime contractor shall provide written certification to the city that it is a sponsor or participant in a DOL approved apprenticeship program.

Apprenticeable Occupations:

Bricklayer
Carpenter
Cement mason
Drywall applicator
Electrician
Glazier
Operating engineer
Painter
Pipefitter
Plasterer
Plumber
Roofer
Sheet metal worker
Structural worker/ironworker
Taper
Carpenter – Acoustical Ceilings
Cabinet Maker
HVAC
Insulation Worker
Electronic Technician
Elevator Installer & Repairer
Foor Layer
Locksmith

5.24.2 Apprentices will be permitted to work at less than the predetermined rate for the work they performed when they are employed pursuant to and individually registered in a bona fide apprenticeship program registered with the U.S. Department of Labor, Employment and Training Administration, Bureau, or if a person is employed in his or her first 90 days of probationary employment as an apprentice in such an apprenticeship program, who is not individually registered in the program, but who has been certified by the Bureau of Apprenticeship & Training or a State Apprenticeship Agency (where appropriate) to be eligible for probation employment as an apprentice. The allowable ratio of apprentices to journeymen on the job site in any craft classification shall not be greater than the ratio permitted to the contractor/subcontractor as to the entire work force under the registered program.

5.24.3 The Contractor shall furnish the City's Engineering Department with sufficient information, which demonstrates that apprentices are employed pursuant to and individually registered in a bona fide apprenticeship program. Any worker listed on a payroll at an apprentice wage rate, who is not registered or otherwise employed as stated above, shall be paid not less than the applicable wage rate on the City wage determination for the classification of work actually performed. In addition, any apprentice performing work on the job site in excess of the ratio permitted under the registered program shall be paid not less than the applicable wage rate on the City wage determination for the work actually performed. Every apprentice must be paid at not less than the rates specified in the registered program for the apprentice's level of progress, expressed as a percentage of the journeyman's hourly rate specified in the City wage determination.

5.24.4 Apprentices shall be paid fringe benefits in accordance with the provisions of the apprenticeship program. If the apprenticeship program does not specify fringe benefits, apprentices must be paid the full amount of fringe benefits listed on the wage determination for the applicable classification. If the Bureau of Apprenticeship Training determines that a different practice prevails for the applicable apprentice classification, fringe benefits shall be paid in accordance with that determination. In the event the Bureau of Apprenticeship & Training, or a state apprenticeship agency recognized by the Bureau, withdraws approval of an apprenticeship program, the contractor will no longer be permitted to utilize apprentices at less than the applicable predetermined rate for the work performed until an acceptable program is approved.

5.25 **Addendum to the Contract – Apprenticeship Program**

5.25.1 The employment and use of apprentices to prosecute the completion of the work shall be governed by the provisions of paragraph 6.5.4 hereof and the Addendum of the Contract “Apprenticeship Program”, both of which are contained herein and incorporated herein.

5.25.2 In accordance with Resolution of the City Council of the City of El Paso, Texas regarding Apprenticeship Programs in City Projects adopted on June 1, 2010, the Contractor and each subcontractor must comply with the following:

5.25.2.1 Shall participate in a United States Department of Labor (DOL) certified apprenticeship program when the work required under the contract includes work that must be performed by apprenticeable occupations and the work involving such apprenticeable occupation has a value of *fifty thousand dollars* or more. The apprenticeable occupations are those listed in 5.24.1.

5.25.2.2 Shall hire registered apprentices enrolled in a DOL certified apprenticeship program;

5.25.2.3 Shall not substitute helpers, unregistered apprentices or other substitutes to perform apprentice level work in place of registered apprentices.

5.25.2.4 Shall pay wage rates and benefit package for apprentices as determined by the apprenticeship program/DOL;

5.25.2.5 Shall comply with DOL requirements for the ratio of apprentices to journeymen; and

5.25.2.6 Shall hire apprentices in all job classifications utilized on the project that are “apprenticeable occupations” listed in paragraph 5.24.1.

5.25.2.7 Noncompliance of the contract provisions concerning the apprenticeship participation may be a basis to terminate the construction contract, which shall be referred to the City Council for determination.

5.25.3 The Contractor shall post the prevailing wage rate schedules made part of this contract at each work site in a prominent location readily accessible to the workers through the duration of the project. In addition, the Contractor shall post a notice to be provided by the City Engineer regarding prevailing wage rates and the City of El Paso Apprenticeship Program, in English and Spanish, which shall be posted nearby the prevailing wage rates schedules.

5.25.4 The Contractor shall, in addition to all other information items to be provided to City, certify to City the names of all apprentices on the project; verification of their status as registered apprentices; and documentation as to their proper wage rates; and documentation as the journeyman-to-apprentice ratios for each trade as determined by the apprenticeship program.

5.25.5 No worker shall be discharged by the Contractor or Subcontractor or in any other manner discriminated against because such worker has filed an

inquiry or complaint, has instituted or caused to be instituted any legal or equitable proceeding or has testified or is about to testify in any such proceeding under or relating to the apprenticeship program.

5.25.6 The Contractor and every subcontractor shall allow immediate entry, into all areas of the job site, by the City Engineer and his/her agents and representatives displaying and presenting proper identification credentials to the job site superintendent or his/her representative. While on the job site the City Engineer and his/her agents and representatives may inspect for all job site and regulations, including but not limited to those concerning safety, security and fire prevention. The Contractor and each subcontractor shall allow any employee to be interviewed at random, at any time and for any reasonable duration by the City Engineer and his/her agents and representatives to determine compliance with the provisions of this contract regarding the apprenticeship program. *The Contractor and each subcontractor shall allow access to its personnel and apprenticeship books and records, at any time and for any reasonable duration by the City Engineer and his/her agents and representatives to determine compliance with the provisions of this contract regarding the apprenticeship program.*

5.25.7 The City reserves the right to terminate this Contract for cause in the Contractor and/or any subcontractor shall breach any of these provisions regarding the apprenticeship program.

5.25.8 The Contractor shall cause these and any other appropriate provisions regarding the apprenticeship program to be inserted in all subcontractor relative to the work to bind the subcontractor to the same apprenticeship program requirements as are applicable to the Contractor.

6.0 PROSECUTION AND PROGRESS

6.1 Subcontracting

6.1.1 The Contractor may utilize the services of specialty subcontractors on those parts of the work which, under normal contracting practices, are performed by specialty subcontractors.

6.1.2 The Contractor shall not award any work to any subcontractor without prior written approval of the Owner, which approval will not be given until the Contractor submits to the Owner a written statement concerning the proposed award to the subcontractor, which statement shall contain such information as the Owner may require.

6.1.3 The Contractor shall be as fully responsible to the Owner for the acts and omissions of his/her subcontractors, and of persons either directly or indirectly employed by them, as the Contractor is for the acts and omissions of persons directly employed by him/her.

6.1.4 The Contractor shall cause appropriate provisions to be inserted in all subcontracts relative to the work to bind subcontractors to the Contractor by the terms of the General Conditions and other contract documents insofar

as applicable to the work of subcontractors and to give the Contractor the same power as regards to the termination of any subcontract that the Owner may exercise over the Contractor under any provisions of the contract documents.

6.1.5 Nothing contained in this contract shall create any contractual relation between any subcontractor and the Owner.

6.1.6 The Owner shall have no responsibility to any subcontractor employed by the contractor for performance of work on the Project contemplated by these contract documents, but said subcontractors will look exclusively to the Contractor for any payments due subcontractors.

6.2 Notice and Service Thereof

Any notice to any Contractor from the Owner or Owner's designated representative relative to any part of this contract shall be in writing and considered delivered and the service thereof completed when said notice is posted, by certified or registered mail, to the said Contractor at his/her last given address, or delivered in person to said Contractor or his/her authorized representative on the work site.

6.3 Progress Schedule

6.3.1 The Contractor, when required, shall furnish the City Engineer with a "Progress Schedule" for approval. The progress schedule may be used to establish major construction operations and to check on the progress of the work. The Contractor shall provide sufficient materials, equipment, and labor to guarantee the completion of the project in accordance with the plans and specifications within the time set forth in the schedule.

6.3.2 If the Contractor falls significantly behind the submitted schedule, the Contractor shall submit a revised schedule for completion of the work within the contract time and modify the operations to provide such additional materials, equipment, and labor necessary to meet the revised schedule. Should the prosecution of the work be discontinued for any reason, the Contractor shall notify the City Engineer at least 24 hours in advance of resuming operations.

6.4 Limitation of Operations

6.4.1 Working Day - A working day shall be any day other than a Saturday, Sunday or legal holiday of the City of El Paso on which the working forces of the Contractor may proceed with regular work for at least six (6) hours toward completion of the contract. Unless work is suspended for causes beyond the Contractor's control, Saturdays, Sundays and holidays on which the Contractor's forces engage in regular work requiring the presence of a City Inspector will be considered as work days.

6.4.2 Contractor's Work Hours - Unless other days and hours of work are specifically prescribed in the technical specifications for this project, the

days and hours during which the Contractor may perform work under this contract are specifically limited, as follows:

6.4.2.1 The Contractor may not perform any work on the project, including grading, excavation, installation of materials or fabrication of subassemblies other than between the hours of 8 a.m. and 4:30 p.m. of each working day.

6.4.2.2 The Contractor may not start, warm up, or operate equipment, deliver, or handle materials or perform any other activity which might disturb adjacent residents or business prior to 7:30 a.m. of each working day.

6.4.2.3 The Contractor shall have completed all operation at the work site, stored all equipment and materials, and completed all clean up at the work site prior to 6 p.m. of each working day.

6.4.2.4 The legal holidays of the City of El Paso are:

6.4.2.4.1 New Year's Day
6.4.2.4.2 Labor Day
6.4.2.4.3 Martin Luther King's Birthday
6.4.2.4.4 Thanksgiving Day & the Friday following Thanksgiving Day (2 days)
6.4.2.4.5 Memorial Day
6.4.2.4.6 Christmas Day
6.4.2.4.7 Fourth of July

6.4.2.5 Permission to work outside the hours and days specified above may be granted by the City Engineer but will be granted only under exceptional circumstances involving the safety or convenience of the public. Such permission will not be granted to allow the Contractor to advance or recover his/her contract schedule unless the safety and convenience of the public are involved. Permission to work outside of normal hours as specified above must be requested in writing by 4:30 p.m. of a working day, no less than seven (7) work days prior to the date on which the Contractor wishes to commence overtime operations. The hours of work specified in this subparagraph are only for the purpose of ensuring that work can be inspected when performed and for minimizing disturbance to the public. They do not prescribe "normal working hours" for the purpose of compliance with legislation involving wages. In any event, if a condition should occur or arise at the site of this project, or from the work being done under this contract which is hazardous or dangerous to property or life, the Contractor shall immediately commence work, regardless of the day of the week or the time of day, to correct or alleviate such condition so that it is no longer dangerous to property or life.

6.4.2.6 When requesting to work other than normal work hours as

specified herein, the Contractor will be charged for the overtime payment to the City Inspector and any testing personnel required.

6.5 Character of Workmen; Methods and Equipment

6.5.1 At the site of the work, the Contractor shall employ a qualified full-time construction superintendent or foreman who shall have full authority to act for the Contractor. It is understood that such representative shall be acceptable to the Owner or Owner's designated representative and shall be one who can continue in that capacity for the particular job involved unless he/she ceases to be on the Contractor's payroll. The use of a subcontractor's foreman as project superintendent will not be allowed.

6.5.2 The Contractor shall at all times employ sufficient labor and equipment for prosecuting the several classes of work to full completion in a manner and time required by the contract.

6.5.2.1 All workmen shall have sufficient skill and experience to perform properly the work assigned to them. Workmen engaged in special work or skilled work shall have sufficient experience in such work and in the operation of the equipment required to perform the work satisfactorily.

6.5.2.2 Any person employed by the Contractor or by any subcontractor who, in the opinion of the City Engineer, does not perform his work in a proper and skillful manner or is intemperate or disorderly shall, at the written request of the City Engineer, be removed forthwith by the Contractor or subcontractor employing such person, **and shall not be reemployed in any portion of the Project or work without the approval of the City Engineer**.

6.5.2.3 Should the Contractor fail to remove such person or persons as required above, or fail to furnish suitable and sufficient personnel for the proper prosecution of the work, the City Engineer may, by written notice, suspend the work until the Contractor complies with the provisions of this paragraph.

6.5.3 All equipment, which is proposed to be used on the work, shall be of sufficient size and in such mechanical condition as to meet requirements of the work and to produce a satisfactory quality of work. Equipment used on any portion of the project shall be such that no injury to the street, adjacent property, or other structures will result from its use.

6.5.3.1 When the methods and equipment to be used by the Contractor in accomplishing the construction are not prescribed in the contract, the Contractor is free to use any methods or equipment that will accomplish the contract work in conformity with the requirements of the contract, provided that no other provisions of the contract are violated.

6.5.4 The employment of apprentices by the Contractor may be **mandatory.**

When required the Contractor shall at all times employ apprentices in U.S. Department of Labor certified apprenticeship programs, in such amounts and trades, as are set forth in the Schedule of Categories of Apprentices, which Schedule is maintained by the Office of the City Engineer. See 5.24 & 5.25 for more details.

6.6 Progress Photographs

The Contractor will furnish photographs in the number, type and state as enumerated below:

N/A

6.7 Suspension of Work

The Contractor shall have no claim for compensation or damages for compensation or damages for delay, including but not limited to lost profits or home office expenses/overhead, should the Contractor be prevented from proceeding with the work required by this contract either before or after the start of construction by any act or omission of the Owner or any reason beyond the control of the Owner. The Contractor further agrees that the Contractor shall be granted an extension of time to perform the work required by the contract but shall not be otherwise compensated for nor entitled to recover any additional costs or expenses arising from such delays.

6.8 Time for Completion and Liquidated Damages

6.8.1 It is hereby understood and mutually agreed by and between the Contractor and the Owner, that the date of beginning and the time for completion as specified in the contract of the work to be done hereunder are ESSENTIAL CONDITIONS of this contract; and it is further mutually understood and agreed that the work embraced in this contract shall be commenced on a date to be specified in the "Notice to Proceed".

6.8.2 The Contractor agrees that said work shall be prosecuted regularly, diligently and uninterruptedly at such rate of progress as will ensure completion thereof within the time specified. It is expressly understood and agreed, by and between the Contractor and Owner, that the time for the completion of work described herein is a reasonable time for the completion of the same, taking into consideration the average climatic change and conditions and usual industrial conditions prevailing in this locality.

6.8.3 **Liquidated Damages-Substantial Completion.** If the said Contractor shall neglect, fail or refuse to complete the work within the time herein specified or any proper extension thereof granted by the Owner, then the Contractor does hereby agree, as part consideration for the awarding of this contract, to pay to the Owner the amount specified in the contract, not as a penalty but as liquidated damages for each such breach of contract set forth herein, for each and every consecutive calendar day that the Contractor shall be in default after the time stipulated in the contract for substantially completing the work.

6.8.3.1 **Liquidated Damages-The Remaining Work** The Remaining Work, as such work is determined by the City Engineer pursuant to section 3.7, shall be completed within the Contract Time or any proper extension thereof granted by Owner. If the Contractor shall neglect, fail or refuse to complete the Remaining Work within the Contract Time or any proper extension thereof granted by the Owner, then the Contractor does hereby agree, as part consideration for the awarding of this contract, to pay to the Owner the amount specified in the contract, not as a penalty but as liquidated damages for the Remaining Work for each such breach of contract set forth herein for each and every consecutive calendar day that the Contractor shall be in default after expiration of the Contract Time.

6.8.4 The said amount is fixed and agreed upon by and between the Contractor and the Owner because of the impracticability and extreme difficulty of fixing and ascertaining the actual damages the Owner would in such event sustain, and said amount is agreed to be the amount of damages which the Owner would sustain and said amount shall be retained from time to time by the Owner from current periodical estimates.

6.8.5 It is further agreed that time is of essence of each and every portion of this contract and of the specifications wherein a definite and certain length of time is fixed for the performance of any act whatsoever; and where under the contract an additional time is allowed for the completion of any work, the new time limit fixed by such extension shall be of the essence of this contract. Provided, that the Contractor shall not be charged with liquidated damages or any excess cost when the Owner determines that the Contractor is without fault and the Contractor's reasons for the time extension are acceptable to the Owner; provided, further, that the Contractor shall not be charged with liquidated damages or any excess cost when the delay in completion of the work is due:

6.8.5.1 To any preference, priority, or allocation duly issued by the Government;

6.8.5.2 To unforeseeable causes beyond the control and without the fault or negligence of the Contractor. Including, but not restricted to, acts of God, or of the public enemy, acts of the Owner, acts of another Contractor in the performance of a contract with the Owner, fires, floods, epidemics, quarantine restrictions, strikes, freight embargoes and severe weather;

6.8.5.3 To any delays of subcontractors or suppliers occasioned by any of the causes specified in subparagraphs 6.8.5.1 and 6.8.5.2 of this paragraph; provided, further, that the Contractor shall, within ten (10) work days from the beginning of such delay, unless the Owner shall grant a further period of time prior to the date of the final settlement of the contract, notify the Owner, in writing, of the causes of the delay; the Owner shall ascertain the facts and extent of the delay and notify the Contractor within a reasonable time of its decision in the matter.

6.9 **Right of Owner to Terminate Contract**

6.9.1 In the event that any of the provisions of this contract are violated by the Contractor, or by any of his/her subcontractors, the Owner may serve written notice to contain the reasons for such intention to terminate the contract, and unless within ten (10) work days after the serving of such notice upon the Contractor, such violation or delay shall cease and satisfactory arrangement of correction be made, the contract shall, upon the expiration of said ten (10) work days, cease and terminate. The City shall have the right to immediately terminate the Contract for default if the Contractor violates any local, state, or federal laws, rules or regulations that relate to the performance of this Agreement.

6.9.1.1 In the event of such termination, the Owner shall immediately serve notice thereof upon the Surety and the Contractor, and the Surety shall have the right to take over and perform the contract, and shall execute a Take over Agreement with the Owner evidencing such intention to take over and perform the contract. Provided, however, that if the surety does not commence performance thereof within ten (10) work days from the date of the mailing of such notice to surety of termination, the Owner may take over the work and prosecute the same to completion by contract or by force, and utilize in completing the work, such materials, appliances and plant as may be on the site of the work and necessary therefore.

6.9.1.2 All costs and charges incurred by the Owner, including the costs of securing the construction site until resumption of work under the contract, together with the cost of completing the work under the contract, will be deducted from any monies due the Contractor or remaining on the contract. If such expenses exceed the sum which would have been payable under the contract, the Contractor and Surety shall be liable to the Owner for said amount.

6.9.2 The Owner may, at any time, at will and without cause, terminate any part of the work to be performed or all remaining work for any reason whatsoever by giving seven (7) days prior written notice to the Contractor. The owner shall incur no liability to the Contractor by reason of such termination, except that the Contractor shall be entitled to payment for work properly completed in accordance with this contract prior to the effective date of the termination. In the event that only part of the work is terminated, the Contractor shall continue in full force and effect as to all remaining work to be completed. <u>The owner shall not be responsible for compensation or damages for delay, damages for loss of anticipated profits on work not performed, demobilization or cancellation costs or charges on account of any termination.</u>

6.9.3 Upon a determination by a court of competent jurisdiction that a termination of the Contractor by the Owner pursuant to subparagraph (A) herein was wrongful, such termination will be deemed converted to a termination for

convenience pursuant to subparagraph (B) herein and the Contractor's remedy for wrongful termination shall be limited to the recovery permitted for termination for convenience as set forth in subparagraph (B) herein.

6.10 **Default of Contract**

6.10.1 The following reasons shall consist default of this contract:

6.10.1.1 If the Contractor fails to begin the work under the contract within the time specified in the Notice to Proceed, or

6.10.1.2 If the Contractor fails to perform the work with sufficient workmen and equipment or with sufficient materials to assure the prompt completion of said work, or

6.10.1.3 If the Contractor fails to perform the work in accordance with the contract requirements and/or refuses to remove and replace rejected materials or unacceptable work, or

6.10.1.4 If the Contractor discontinues the prosecution of the work, or

6.10.1.5 If the Contractor fails to resume work that has been discontinued within a reasonable time after notice to do so, or

6.10.1.6 If Contractor fails to complete any remaining punch list items for the project after notice to do so,

6.10.1.7 If the Contractor becomes insolvent or is declared bankrupt, or commits any act of bankruptcy or insolvency, or

6.10.1.8 If the Contractor allows any final judgment to remain unsatisfied for a period of 10 days, or

6.10.1.9 If the Contractor makes an assignment for the benefit of creditors, without obtaining the written consent of the Owner and the Surety or Sureties, or

6.10.1.10 If the Contractor fails to comply with contract requirements regarding minimum wage payments or EEO requirements, or

6.10.1.11 If the Contractor, for any other cause whatsoever, fails to carry on the work in an acceptable manner.

6.10.1.12 If the Contractor violates any local, state, or federal laws, rules or regulations that relate to the performance of this Agreement.

6.10.2 The City Engineer will give notice in writing to the Contractor and the Surety of such delay, neglect, or default.

6.10.3 If the Contractor or Surety, within a period of 10 days after such notice, does not proceed in accordance therewith, then the Owner will have full

power and authority without violating the contract, to take the prosecution of the work out of the hands of the Contractor. The Owner may enter into an agreement for the completion of said contract according to the terms and provisions thereof, or use such other methods as in the opinion of the Owner will be required for the completion of said contract in an acceptable manner.

6.10.4 All costs and charges incurred by the Owner, including the costs of securing the construction site until resumption of work under the contract, together with the cost of completing the work under the contract, will be deducted from any monies due or remaining on the contract. If such expense exceeds the sum which would have been payable under the contract, then the Contractor and the Surety shall be liable to the Owner for said amount.

7.0 PAYMENTS

7.1 Construction Schedule and Periodic Estimates

7.1.1 Immediately after execution and delivery of the contract, and before the first partial payment is made, the Contractor shall deliver to the Owner an estimated construction progress schedule in a form satisfactory to the Owner, showing the proposed dates of commencement and completion of each of the documents and the anticipated amount of each monthly payment that will become due the Contractor in accordance with the progress schedule. The Contractor shall also furnish, on forms to be supplied by the Owner or Owner's designated representative:

7.1.1.1 A detailed estimate giving a complete breakdown of the contract price, and

7.1.1.2 Periodic itemized estimates of work, done for the purpose of making partial payments thereon. The costs employed in making up any of these schedules will be used only for determining the basis of partial payments and will not be considered as fixing a basis for additions to or deductions from the contract price.

7.2 Progress Payments

7.2.1 The Contractor shall request a meeting, at the construction site with the appointed City Inspector and the Owner's designated representative on or about the twenty-fifth (25) of each month, to discuss progress and payment. Upon approval of the completion estimate, the Contractor shall submit an Application of Certificate for Payment, using the AIA documents G702 and G702A, accompanied by a current progress schedule. The Contractor shall submit his/her estimate not later than the first day of the month. The estimate shall indicate the amount of the work completed in percentages which was performed by subcontractors employed by the Contractor. The Owner shall have the right to review the estimate, dispute and revise the estimate based upon the Owner’s review of the progress of the work and pay the Contractor in accordance with the Owner’s findings. If the Owner disputes the estimates, the dispute shall constitute a bona fide dispute and

payment to the Contractor shall be excepted from the requirements of Chapter 2251 ("Chapter 2251") of the Texas Government Code pursuant to Section 2251.002 thereof. Upon approval of the pay request by the City Engineering Department, the following will apply:

7.2.1.1 The Owner shall make a progress payment to the Contractor in accordance with Chapter 2251, subject to applicable exceptions. Payment by the Owner will be based on the duly certified and Owner-approved estimate of the work performed during the preceding calendar month under this contract.

7.2.1.2 To ensure the proper performance of this contract, the Owner shall retain ten percent (10%) of the amount of each estimated payment for contracts in an amount of less than four hundred thousand and no/100 dollars ($400,000.00) and five percent (5%) of the amount of each estimated payment for contracts in the amount of four hundred thousand and no/100 dollars ($400,000.00) or more. The Owner may release up to fifty percent (50%) of the amount retained at the time the Owner certifies to Contractor that substantial completion has been achieved within the contract time. The remaining retainage shall not be released to Contractor until such time as the final completion and acceptance of all work covered by this contract has been achieved.

Payment of retainage for unit price contracts shall be based on the current value of the contract at the time of substantial completion.

Retainage may be reduced by Owner for deductions from the contract price, including but not limited to liquidated damages. Release of any retainage is subject to approval by the Surety providing the bonds required of the Contractor.

7.2.1.3 In preparing estimates, the material delivered on the site and preparatory work done may be taken into consideration.

7.2.1.4 All material and work covered by partial payments made shall thereupon become the sole property of the Owner, but this provision shall not be construed as relieving the Contractor from the sole responsibility for the care and protection of materials and work upon which payments have been made or the restoration of any damaged work, or stored materials stolen, nor be construed as a waiver of the right of the Owner to require the fulfillment of all of the terms of the contract.

7.2.1.5 The Owner shall, for all public works contracts in excess of $400,000, invest all retainage over five percent (5%) of payments, if any, under this contract, in interest bearing accounts and pay such interest to the Contractor upon completion of the contract. All other applicable terms and definitions in Section

2252.032, Texas Government Code, are hereby incorporated by reference in this paragraph.

7.2.1.6 The contractor agrees that he/she will indemnify and save the owner harmless from all claims growing out of the lawful materialmen and furnishers of machinery and parts thereof, equipment, power tools, and all supplies, including commissary, incurred in the furtherance of the performance of this contract. in accordance with tex. prop. code ann. 53.231 et. seq., when the amount of this contract does not exceed $25,000 and when the owner has received a notice of an unpaid claim(s) from a person who has furnished materials or labor in connection with the performance of a public works contract, the owner may, after having served written notice on said contractor, either pay unpaid claims of which the owner has written notice thereof, or direct or withhold from the contractor's unpaid compensation a sum of money deemed reasonably sufficient to pay any and all such lawful claims until satisfactory evidence is furnished that all liabilities have been fully discharged, whereupon payment to the contractor shall be resumed, in paying any unpaid claims in accordance with Texas property code ann. 53.231 et seq., the owner shall be deemed the agent of the contractor, and any payment so made by the owner shall be considered as a payment made under the contract by the owner to the contractor.

7.3 Assignments

The Contractor shall not assign the whole or any part of the contract, or any monies due or to become due hereunder without written consent of the Owner and Surety. In case the Contractor assigns all or any part of any monies due or to become due under this contract, the instrument of assignments shall contain a clause substantially to the effect that it is agreed that the right of the assignee in and to any monies due or to become due to the Contractor shall be subject to prior claims of all persons, firms and corporations of services rendered or materials supplied for the performance of the work called for in this contract.

7.4 Acceptance of Final Payment Constitutes Release

The acceptance by the Contractor of final payment shall be, and shall operate as a release to the Owner of all claims and all liability to the Contractor for all things done or furnished in connection with this work and for every act and neglect of the Owner and others relating to or arising out of this work. No payment, however, final or otherwise, shall operate to release the Contractor or his/her sureties from any obligations under this contract or from the Performance and Payment Bonds.

7.5 Payrolls and Basic Records

7.5.1 Payrolls and basic records relating thereto shall be maintained by the Contractor during the course of the work and preserved for a period of three (3) years thereafter for all laborers and mechanics working at the site of the work. Such records shall contain the name, address, and social security

number of each such worker, the workers correct classification, hourly rates of wages paid, including rates of contributions or costs anticipated for bona fide fringe benefits or cash equivalents thereof, daily and weekly number of hours worked, deductions made and actual wages paid.

7.5.2 Whenever the City of El Paso has found that the wages of any laborer or mechanic include the amount of any costs reasonably anticipated in providing benefits under a plan or program, the Contractor shall maintain records which show that the commitment to provide such benefits is enforceable, that the plan or program is financially responsible, and the plan or program has been communicated in writing to the laborers or mechanics affected, and records which show the costs anticipated or the actual cost incurred in providing such benefits.

7.5.3 Contractors employing apprentices and trainees under approved programs shall maintain written evidence of the registration of apprenticeship programs and certification of trainee programs, the registration of the apprentices and trainees, and the ratios and wage rates prescribed in the applicable programs.

7.5.4 The Contractor shall submit weekly for each week in which any contract work is performed the original copy of all payrolls submitted shall set out accurately and completely all of the information required to be maintained. This information may be submitted in any form desired. Optional form WH-347 is available for this purpose and may be purchased from the Superintendent of Documents (Federal Stock Number 029-005-00014-1), U.S. Government Printing Office, Washington, D.C. 20402. The prime Contractor is responsible for the submission of copies of payrolls by all subcontractors.

7.5.4.1 Each payroll submitted shall be accompanied by a “Statement of Compliance”, signed by the Contractor or Subcontractor or the agent who pays or supervises the payment of the persons employed under the contract and shall certify the following:

7.5.4.1.1 That the payroll for the payroll period contains the information required, and that such information is correct and complete.

7.5.4.1.2 That each laborer or mechanic (including each helper, apprentice, and trainee), employed on the contract during the payroll period has been paid the full weekly wages earned, without rebate, either directly or indirectly, and that no deductions have been made either directly or indirectly from the full wages earned other than permissible deductions.

7.5.4.1.3 That each laborer or mechanic has been paid not less than the applicable wage rates and fringe benefits or cash equivalents for the classification of work performed, as specified in the applicable wage determination incorporated into the contract.

7.5.4.2 The falsification of any of the above certifications may subject the Contractor or the Subcontractor to debarment.

7.5.4.3 The Contractor or Subcontractor shall make the records required under this section available for inspection, copying or transcription by authorized representatives of the El Paso City Government and/or appropriate State or Federal agency, and shall permit such representatives to interview employees during working hours on the job. If the Contractor or Subcontractor fails to submit the required records or to make them available, the City of El Paso may, after written notice to the Contractor, take such action as may be necessary to cause the suspension of any further payment, advance, or guarantee of funds. Furthermore, failure to submit the required records upon request or to make such records available may be grounds for debarment.

8.0 DISPUTES AND REMEDIES

8.1 Dispute Resolution

In the event of any controversy or claim arising out of or in any way related to this contract, the parties agree to submit the controversy or claim to a mutually agreed upon non-binding alternative dispute resolution procedure prior to the filing of a lawsuit with respect to the controversy or claim. The cost of the alternative dispute resolution procedure shall be divided and borne equally by the parties.

8.2 Governing Law

This contract shall be governed by the law of the place where the project is located.

8.3 Rights and Remedies

The duties and obligations imposed by the contract documents and the rights and remedies available there under shall be in addition to and not a limitation of any duties, obligations, rights and remedies otherwise imposed or available by law.

8.4 Illegality

If any provision of this contract or the application thereof to any person or circumstance is rendered or declared illegal for any reason or shall be invalid or unenforceable, the remainder of this contract and the application of such provision to other persons or circumstance shall not be affected thereby but shall be enforced to the extent permitted by law. The parties agree to negotiate in good faith for a proper amendment to this contract in the event any provision is declared illegal, invalid or unenforceable to reflect the original intent of the parties.

9.0 RECORDS/AUDIT

9.1 The City of El Paso, its authorized representative, and/or the appropriate State or Federal agency reserve the right to audit the Contractor's records pertaining to this project to verify the accuracy and appropriateness of all pricing data, including data

used to negotiate any Change Orders. The City of El Paso reserves the right to decrease the contract amount and/or payments made on this contract, if upon audit of the project's records, the audit discloses that false, misleading or inaccurate cost and/or pricing data has been provided.

9.2 Additionally, authorized representatives and agents of the City, State or Federal agencies, if applicable, shall be permitted to interview any personnel performing work on behalf of or in relation to the project, including but not limited to, field and office personnel.

SAFETY STANDARD AND ACCIDENT PREVENTION

With respect to all work performed under this contract, the Contractor shall:

a. Comply with the safety standards provisions of applicable laws, building and construction codes, and the "Manual of Accident Prevention in Construction" published by the Associated General Contractors of America, the requirements of the Occupational Safety and Health Act (OSHA) of 1970 (Public Law 91-596), including but not limited to OSHA Standards.

b. Maintain at his office or other well-known place at the job site, all articles necessary for giving first aid to the injured, and shall make standing arrangements for the immediate removal to a hospital or a doctor's care of person (including employees), who may be injured on the job site. In no case shall employees be permitted to work at a job site before the employer has made a standing arrangement for removal of injured persons to a hospital or a doctor's care.

c. Shall exercise proper precaution at all times for the protection of persons and property and shall be responsible for all damages to persons or property, either on or off the site, which occurs as a result of his prosecution of the works. The City of El Paso may require additional safety and health measures as it may determine to be reasonably necessary. Accident prevention measures such as safety training and education, proper illumination, fire prevention, and provisions of personal protective equipment shall comply with OSHA Standards.

An OSHA package will be furnished to the Contractor at the required preconstruction meeting before a Notice to Proceed is issued on this project.

TRENCH SAFETY SYSTEM
(FOR PROJECTS WHERE TRENCHING IS INVOLVED)

A. GENERAL DUTIES AND RESPONSIBILITIES

a) The Contractor shall be required to install a Trench Safety System to provide for the safe excavation of all trenches exceeding a depth of five feet (5'), as per Occupational Safety and Health Act (OSHA) standards.

b) It shall be the duty and responsibility of the Contractor and all its subcontractors to be familiar and comply with all requirements of Public Law 91-596, 29 U.S.C. Secs. 651 et seq., the Occupational Safety and Health Act (OSHA) of 1970, and all amendments thereto, and to enforce and comply with all the provisions of this Act. In addition, on projects in which trench excavation will exceed a depth of five feet (5'), the Contractor and all subcontractors shall comply with all requirements of 29 C.F.R. Secs. 1926.651 and 1926.652, OSHA Safety and Health Standards, which are more fully described herein, and shall require a pay item classification, a described below.

1) The Contractor will be required to submit three (3) sets of a Trench Safety System to the Deputy Director for Engineering for review within twenty-one (21) consecutive calendar days after notification that he has been awarded the contract. Submitted plans and specifications will be considered part of the bid documents and will become part of the contract documents.

2) Submitted plans must be signed and sealed by a professional registered in the State of Texas, with professional experience in Geotechnical Engineering. The Contractor is responsible for obtaining borings and soil analysis, as required for the design and preparation of the Trench Safety System. The Trench Safety System shall be designed in conformance with OSHA standards and regulations.

3) No trenching in excess of five feet (5') below existing grade will be allowed until the Trench Safety System is reviewed. Changes in the Trench Safety System after initiation of construction will not be considered as a basis for an **extension of time** or change order. Each change will require the same review process, as per the original Trench Safety System.

4) The Contractor accepts sole responsibility for compliance with all applicable safety requirements. The review is only for general conformance with OSHA safety standards; and review of the Trench Safety System does not relieve the Contractor of responsibility for any or all construction means, methods, techniques and procedures.

5) Any property damage or bodily injury, including death, that arises from use of the trench or from the Owner's failure to note exceptions to the Trench Safety System shall remain the sole responsibility and liability of the Contractor.

6) Contractors have three (3) generally accepted methods or combination thereof to meet OSHA standards for Trench Safety System:

   a) Minimum angle of repose for sloping of the sides of excavations.

   b) Utilization of trench box.

   c) Shoring, sheeting, and bracing methods.

7) Contractors electing to utilize the minimum angle of repose must submit:

   a) Soil classification according to the Unified Soil Classification System, including water content and plasticity index, a minimum angle of the slope of excavation for the trench.

   b) A detailed plan of the excavation area and the impact on existing right-of-way and infrastructure.

8) Contractors electing to utilize a trench box must submit physical dimensions, materials, position in the trench, expected loads and the strength of the box.

9) Contractors electing to utilize shoring, sheeting, and bracing must submit dimensions and materials of all uprights, stringers, cross-bracing and spacing required to meet OSHA requirements. No claims for delay will be permitted.

10) The Deputy Director for Engineering has the authority to request for review all design data, calculations and information pertinent to the Trench Safety Systems.

B. INDEMNIFICATION

THE CONTRACTOR SHALL INDEMNIFY AND HOLD HARMLESS THE OWNER, ITS EMPLOYEES AND AGENTS FROM ANY AND ALL DAMAGES, COSTS (INCLUDING, AND WITHOUT LIMITATION, LEGAL FEES, COURT COSTS AND THE COST OF INVESTIGATION), JUDGEMENTS OR CLAIMS BY ANYONE, FOR INJURY OR DEATH OF PERSONS RESULTING FROM THE COLLAPSE OR FAILURE OF TRENCHES CONSTRUCTED UNDER THE CONTRACT.

THE CONTRACTOR ACKNOWLEDGES AND AGREES THAT THIS INDEMNITY PROVISION PROVIDES INDEMNITY FOR THE OWNER IN THE EVENT THAT A CLAIM IS MADE THAT THE OWNER IS NEGLIGENT EITHER BY ACT OR OMISSION IN PROVIDING FOR TRENCH SAFETY, INCLUDING, BUT NOT LIMITED TO, INSPECTIONS, FAILURE TO ISSUE STOP WORK ORDERS, AND THE HIRING OF THE CONTRACTOR.

C. DESCRIPTION

This item shall govern the Trench Safety Systems required for the construction of all trench excavation to be utilized in the project, including all additional excavation and backfill necessitated by the safety system. The Trench Safety System shall be suitable for construction of pipelines, utilities, etc., that are installed below grade and shall be sufficient to fully protect public or private property, including other existing utilities and structures below, or above grade. Trench Safety Systems include, but are not limited to, sloping of sides of excavation, sheeting, trench boxes or trench shields, sheet piling, cribbing, bracing, shoring, dewatering or diversion of water to provide adequate drainage.

The Contractor shall be responsible for the design of Trench Safety Systems and procedures such as the use of sheet piling, shoring or other means of temporary support to protect existing buildings, streets, highways, water conveying structures or any other structures. In the case of existing utilities, the Contractor may elect to remove the utilities under the stipulated condition that the removal and subsequent replacement of these utilities shall meet with the approval of the Engineer, the Owner, the Utility Owner, and all agencies having jurisdiction of the structure or property. In all cases, the Contractor shall be fully responsible for the protection of public, or private property, and for the protection of any person or persons who, as a result of the Contractor's work, may be injured.

D. CONSTRUCTION METHODS

Trench Safety Systems shall be accomplished in accordance with the detailed specifications set out in the provisions for Excavations, Trenching, and Shoring, Federal Occupational Safety and Health Administration (OSHA) Standards, 29 CFR, Part 1926, Subpart P, as amended, including proposed Rules published in the Federal Register (Volume 52, No. 72) on Wednesday, April 15, 1987. The sections that are incorporated into these specifications by reference include Sections 1926-650 through 1926-653.

Legislation that has been enacted by the Texas Legislature (H. B. No. 662 and H. B. No. 665) with regard to Trench Safety Systems, hereby incorporated by reference, into these specifications.

E. SAFETY PROGRAM

The Contractor shall submit a safety program specifically for the construction of trench excavations together with the trench excavation plans for Trench Safety Systems. The trench safety program shall be in accordance with OSHA standards governing the presence and activities of individuals working in and around trench excavations.

F. PAY ITEM

Measurement: Trench Safety Systems shall be measured by the linear foot along the centerline of trench including manholes and other line structures.

Payment: Payment for Trench Safety Systems, measured as prescribed above, shall be made at the unit price bid per linear foot of Trench Safety Systems. Payment of all work prescribed under this item shall be full compensation for the Trench Safety Systems including all design, testing, inspection, excavation, and backfill required to furnish, install, maintain and remove all shoring, sheeting, or bracing; for dewatering or diversion of water; for all jacking and jack removal; for required compaction; and for all other labor, material, tools, equipment, and incidentals necessary to complete the Trench Safety Systems work.

G. INSPECTION

The Contractor shall provide a qualified person to make daily inspections of the Trench Safety Systems to ensure that the systems meet OSHA requirements. The Contractor shall maintain a permanent record of daily inspections, and submit a weekly report to the Deputy Director for Engineering.

If evidence of possible cave-ins or slides is apparent, all work in the trench shall cease until the necessary precautions have been taken by the Contractor to safeguard personnel entering the trench. It is the sole duty, responsibility, and prerogative of the Contractor, not the Owner or the Owner's designated representative, to determine the specific applicability of the designed Trench Safety Systems to each field condition encountered on the project.

H. EMERGENCIES

In any emergency situation which may threaten or affect the safety or welfare of persons or property, the Contractor shall act at his discretion to prevent possible damage, injury, or loss. Any additional compensation or extension of time claimed for such action shall be considered in view of the cause of the emergency and in accordance with Paragraph 5.7 of the General Conditions of the Contract, Protection of Work and Property Emergency.

CONSTRUCTION CONTRACTS
FEDERALLY MANDATED CLAUSES

I. APPEAL PROCEDURES

A. The City of El Paso reserves the right to postpone bid openings for its own convenience.

B. Changes to the specifications will be made by amendment.

C. Prime Contractors and subcontractors may make appointments to discuss these specifications. This, however, does not relieve them from the written, documented requests required by paragraphs D and F below.

D. Requests for clarification of specifications and protests of specifications must be received by the City in writing, not less than **ten (10) working days** before the date of scheduled bid opening. Any request for any approved equal or protest of the specifications must be fully supported with technical data, test results, or other pertinent information as evidence that the substitute offered is equal to or better than the specification requirement. In addition, any test requirements in the specifications that pertain to an item under consideration for approved equal must be submitted with request for approved equal.

Any requests under this section should be submitted in writing to:

Purchasing Manager:	Bruce Collins
Phone:	(915) 212-1189
Fax:	(915) 212-0044
Visit or Mail At:	City of El Paso 300 N. Campbell 1st Floor El Paso, TX 79901
Website:	http://www.elpasotexas.gov/financial_services/purchasing.asp

A copy of the written request should also be submitted to:

Director, Sun Metro:	Jay Banasiak
Phone:	(915)212-3333
Visit or Mail At:	10151 Montana Ave. El Paso, TX 79925
Website:	**http://www.sunmetro.net/index.html**

E. City's replies to request under paragraph D above will be postmarked at least **five (5) days** before the date scheduled for bid opening.

F. Under certain limited circumstances, an interested party may protest to the Federal Transit Administration (FTA) the award of contract pursuant to an FTA grant.

Review by FTA may be permitted provided that:

1. The protest is filed within the time limits set forth below; and

2. The protestor has exhausted all administrative remedies available at the grantee (City) level.

    a. Definitions:

        (1) The term “days” refers to working days of the Federal Government.

        (2) The term “file” or “submit” refers to the date of receipt by FTA.

        (3) The term “grantee” refers to the City of El Paso.

        (4) “Exhaustion of administrative remedies at the grantee level” means any action or inaction on the part of the City which is prejudicial to the position taken in a written protest filed with the City. It may include, but is not limited to:

            (a) A final City decision on the merits of the protest.

            (b) A procurement action such as the award of a contract or the rejection of a bid despite the pendency of the protest.

            (c) City acquiescence in and active support of continued and substantial contract performance despite the pendency of a protest.

        (5) The term “interested party” includes all bidders on the contract or procurement. The term may also include a subcontractor or supplier at any tier who shows that he/she has a substantial economic interest in a provision of the Invitation for Bids (IFB) or the Request for Proposals (RFP), or in the interpretation of such a provision.

        (6) Violation of Federal law or regulation is defined as the infringement of any valid requirement imposed by Federal statute or regulation which requirement governs the letting of contracts pursuant to a grant agreement. However, any protests involving a local matter and/or determination that are clearly within the discretionary powers of the grantee should be resolved at the local level. Specific examples of determinations that are within the discretionary powers of the grantee should be resolved at the local level. Specific examples of determinations that are within the discretionary powers of the grantee include, but not necessarily limited to, determinations of responsiveness and responsibility, the revisions of specifications to incorporate the evaluation of life-cycle costing (LCC) factors in connection with any given procurement, and determinations regarding bonding requirements. In other words, the protester must be able to demonstrate or establish a clear violation by the grantee of a specific law or regulation, e.g. a violation of the prohibition against unduly exclusionary and restrictive specifications, or a violation of the Buy American requirements.

(7) The term “bid” as used herein also includes the term “offer” or “proposal” as used in the context of negotiated procurements.

G. FTA’s review of any protest will be limited to:

1. The recipient does not have protest procedures, or

2. Has not complied with its protest procedures, or

3. Has not reviewed the protest when presented an opportunity to do so.

4. When a Federal law or regulation is involved…”FTA will exercise discretionary jurisdiction over those appeals involving issues important to FTA’s overall public transportation program.

The protestor must deliver its appeal to the FTA Regional Administrator…within five (5) working days of the date when the protestor has received actual or constructive notice of the recipient’s **final** decision,” or …”when the protestor has identified other grounds for appeal to FTA,” such as “the recipient’s failure to have or failure to comply with its protest procedures or failure to review the protest.” [**FTA C 4220.1F**, VII, 1.a. b.]

II. FTA CONSTRUCTION CONTRACTS

PROGRAM FRAUD AND FALSE OR FRAUDULENT STATEMENTS AND RELATED ACTS
31 U.S.C. 3801 et seq.
49 CFR Part 31 18 U.S.C. 1001
49 U.S.C. 5307

Program Fraud and False or Fraudulent Statements or Related Acts.

(1) The Contractor acknowledges that the provisions of the Program Fraud Civil Remedies Act of 1986, as amended, 31 U.S.C. § 3801 et seq. and U.S. DOT regulations, "Program Fraud Civil Remedies," 49 C.F.R. Part 31, apply to its actions pertaining to this Project. Upon execution of the underlying contract, the Contractor certifies or affirms the truthfulness and accuracy of any statement it has made, it makes, it may make, or causes to be made, pertaining to the underlying contract or the FTA assisted project for which this contract work is being performed. In addition to other penalties that may be applicable, the Contractor further acknowledges that if it makes, or causes to be made, a false, fictitious, or fraudulent claim, statement, submission, or certification, the Federal Government reserves the right to impose the penalties of the Program Fraud Civil Remedies Act of 1986 on the Contractor to the extent the Federal Government deems appropriate.

(2) The Contractor also acknowledges that if it makes, or causes to be made, a false, fictitious, or fraudulent claim, statement, submission, or certification to the Federal Government under a contract connected with a project that is financed in whole or in part with Federal assistance originally awarded by FTA under the authority of ***49 U.S.C. § 5323***, the Government reserves the right to impose the penalties of 18 U.S.C. § 1001 and 49 U.S.C. § 5323(l) on the Contractor, to the extent the Federal Government deems appropriate.

(3) The Contractor agrees to include the above two clauses in each subcontract financed in whole or in part with Federal assistance provided by FTA. It is further agreed that the clauses shall not be modified, except to identify the subcontractor who will be subject to the provisions.

ACCESS TO RECORDS AND REPORTS
49 U.S.C. 5325
18 CFR 18.36 (i)
49 CFR 633.17

Access to Records - The following access to records requirements apply to this Contract:

1. Where the Purchaser is not a State but a local government and is the FTA Recipient or a subgrantee of the FTA Recipient in accordance with 49 C.F.R. 18.36(i), the Contractor agrees to provide the Purchaser, the FTA Administrator, the Comptroller General of the United States or any of their authorized representatives access to any books, documents, papers and records of the Contractor which are directly pertinent to this contract for the purposes of making audits, examinations, excerpts and transcriptions. Contractor also agrees, pursuant to 49 C.F.R. 633.17 to provide the FTA Administrator or his authorized representatives including any PMO Contractor access to Contractor's records and construction sites pertaining to a major capital project, defined at 49 U.S.C. 5302(a)1, which is receiving federal financial assistance through the programs described at 49 U.S.C. 5307, 5309 or 5311.

2. Where any Purchaser which is the FTA Recipient or a subgrantee of the FTA Recipient in accordance with 49 U.S.C. 5325(a) enters into a contract for a capital project or improvement (defined at 49 U.S.C. 5302(a)1) through other than competitive bidding, the Contractor shall make available records related to the contract to the Purchaser, the Secretary of Transportation and the Comptroller General or any authorized officer or employee of any of them for the purposes of conducting an audit and inspection.

3. The Contractor agrees to permit any of the foregoing parties to reproduce by any means whatsoever or to copy excerpts and transcriptions as reasonably needed.

4. The Contractor agrees to maintain all books, records, accounts and reports required under this contract for a period of not less than three years after the date of termination or expiration of this contract, except in the event of litigation or settlement of claims arising from the performance of this contract, in which case Contractor agrees to maintain same until the Purchaser, the FTA Administrator, the Comptroller General, or any of their duly authorized representatives, have disposed of all such litigation, appeals, claims or exceptions related thereto. Reference 49 CFR 18.42(b).

5. Access to Records. Apart from the more limited record access provisions of the Common Grant Rules, 49 U.S.C. Section 5325(g) provides FTA and DOT officials, the U.S. Comptroller General, or any of their representatives, access to and the right to examine and inspect all records, documents, and papers, including contracts, related to any FTA project financed with Federal assistance authorized by 49 U.S.C. Chapter 53.

FEDERAL CHANGES
49 CFR Part 18

Federal Changes - Contractor shall at all times comply with all applicable FTA regulations, policies, procedures and directives, including without limitation those listed directly or by reference in the Master Agreement MA18, dated October, 2011 between Purchaser and FTA, as they may be amended or promulgated from time to time during the term of this contract. Contractor's failure to so comply shall constitute a material breach of this contract.

No Obligation by the Federal Government.

(1) The Purchaser and Contractor acknowledge and agree that, notwithstanding any concurrence by the Federal Government in or approval of the solicitation or award of the underlying contract, absent the express written consent by the Federal Government, the Federal Government is not a party to this contract and shall not be subject to any obligations or liabilities to the Purchaser, Contractor, or any other party (whether or not a party to that contract) pertaining to any matter resulting from the underlying contract.

(2) The Contractor agrees to include the above clause in each subcontract financed in whole or in part with Federal assistance provided by FTA. It is further agreed that the clause shall not be modified, except to identify the subcontractor who will be subject to its provisions.

TERMINATION
49 U.S.C. Part 18
FTA Circular 4220.1F

a. Termination for Convenience Sun Metro may terminate this contract, in whole or in part, at any time by written notice to the Contractor when it is in the Government's best interest. The Contractor shall be paid its costs, including contract close-out costs, and profit on work performed up to the time of termination. The Contractor shall promptly submit its termination claim to Sun Metro to be paid the Contractor. If the Contractor has any property in its possession belonging to the Sun Metro, the Contractor will account for the same, and dispose of it in the manner that Sun Metro directs.

b. Termination for Default If the Contractor refuses or fails to prosecute the work or any separable part, with the diligence that will insure its completion within the time specified in this contract or any extension or fails to complete the work within this time, or if the Contractor fails to comply with any other provisions of this contract, the City and Sun Metro may terminate this contract for default. The City and Sun Metro shall terminate by delivering to the Contractor a Notice of Termination specifying the nature of the default. In this event, the Recipient may take over the work and compete it by contract or otherwise, and may take possession of and use any materials, appliances, and plant on the work site necessary for completing the work. The Contractor and its sureties shall be liable for any damage to the Recipient resulting from the Contractor's refusal or failure to complete the work within specified time, whether or not the Contractor's right to proceed with the work is terminated. This liability includes any increased costs incurred by the Recipient in completing the work.

The Contractor's right to proceed shall not be terminated nor the Contractor charged with damages under this clause if-

1. the delay in completing the work arises from unforeseeable causes beyond the control and without the fault or negligence of the Contractor. Examples of such causes include: acts of God, acts of the Recipient, acts of another Contractor in the performance of a contract with the Recipient, epidemics, quarantine restrictions, strikes, freight embargoes; and

2. the contractor, within [10] days from the beginning of any delay, notifies the (Recipient) in writing of the causes of delay. If in the judgment of the City and Sun Metro, the delay is excusable, the time for completing the work shall be extended. The judgment of the City and Sun Metro shall be final and conclusive on the parties, but subject to appeal under the Disputes clauses.

If, after termination of the Contractor's right to proceed, it is determined that the Contractor was not in default, or that the delay was excusable, the rights and obligations of the parties will be the same as if the termination had been issued for the convenience of the Recipient.

c. Opportunity to Cure Sun Metro in its sole discretion may, in the case of a termination for breach or default, allow the Contractor 15 calendar days in which to cure the defect. In such case, the notice of termination will state the time period in which cure is permitted and other appropriate conditions

If Contractor fails to remedy to Sun Metro's satisfaction the breach or default of any of the terms, covenants, or conditions of this Contract within fifteen days after receipt by Contractor of written notice from Sun Metro setting forth the nature of said breach or default, Sun Metro shall have the right to terminate the Contract without any further obligation to Contractor. Any such termination for default shall not in any way operate to preclude Sun Metro from also pursuing all available remedies against Contractor and its sureties for said breach or default.

d. Waiver of Remedies for any Breach In the event that Sun Metro elects to waive its remedies for any breach by Contractor of any covenant, term or condition of this Contract, such waiver by Sun Metro shall not limit Sun Metro's remedies for any succeeding breach of that or of any other term, covenant, or condition of this Contract.

If, after termination for failure to fulfill contract obligations, it is determined that the Contractor was not in default, the rights and obligations of the parties shall be the same as if the termination had been issued for the convenience of the Recipient.

CIVIL RIGHTS REQUIREMENTS
29 U.S.C. § 623, 42 U.S.C. § 2000
42 U.S.C. § 6102, 42 U.S.C. § 12112
42 U.S.C. § 12132, 49 U.S.C. § 5332
29 CFR Part 1630, 41 CFR Parts 60 et seq.

Civil Rights - The following requirements apply to the underlying contract:

(1) Nondiscrimination - In accordance with Title VI of the Civil Rights Act, as amended, 42 U.S.C. § 2000d, section 303 of the Age Discrimination Act of 1975, as amended, 42 U.S.C. § 6102, section 202 of the Americans with Disabilities Act of 1990, 42 U.S.C. § 12132, and Federal transit law at 49 U.S.C. § 5332, the Contractor agrees that it will not discriminate against any employee or applicant for employment because of race, color, creed, national origin, sex, age, or disability. In addition, the Contractor agrees to comply with applicable Federal implementing regulations and other implementing requirements FTA may issue.

(2) Equal Employment Opportunity - The following equal employment opportunity requirements apply to the underlying contract:

(a) Race, Color, Creed, National Origin, Sex - In accordance with Title VII of the Civil Rights Act, as amended, 42 U.S.C. § 2000e, and Federal transit laws at 49 U.S.C. § 5332, the Contractor agrees to comply with all applicable equal employment opportunity requirements of U.S. Department of Labor (U.S. DOL) regulations, "Office of Federal Contract Compliance Programs, Equal Employment Opportunity, Department of Labor," 41 C.F.R. Parts 60 et seq., (which implement Executive Order No. 11246, "Equal Employment Opportunity," as amended by Executive Order No. 11375, "Amending Executive Order 11246 Relating to Equal Employment Opportunity," 42 U.S.C. § 2000e note), and with any applicable Federal statutes, executive orders, regulations, and Federal policies that may in the future affect construction activities undertaken in the course of the Project. The Contractor agrees to take affirmative action to ensure that applicants are employed, and that employees are treated during employment, without regard to their race, color, creed, national origin, sex, or age. Such action shall include, but not be limited to, the following: employment, upgrading,

demotion or transfer, recruitment or recruitment advertising, layoff or termination; rates of pay or other forms of compensation; and selection for training, including apprenticeship. In addition, the Contractor agrees to comply with any implementing requirements FTA may issue.

(b) Age - In accordance with section 4 of the Age Discrimination in Employment Act of 1967, as amended, 29 U.S.C. § § 623 and Federal transit law at 49 U.S.C. § 5332, the Contractor agrees to refrain from discrimination against present and prospective employees for reason of age. In addition, the Contractor agrees to comply with any implementing requirements FTA may issue.

(c) Disabilities - In accordance with section 102 of the Americans with Disabilities Act, as amended, 42 U.S.C. § 12112, the Contractor agrees that it will comply with the requirements of U.S. Equal Employment Opportunity Commission, "Regulations to Implement the Equal Employment Provisions of the Americans with Disabilities Act," 29 C.F.R. Part 1630, pertaining to employment of persons with disabilities. In addition, the Contractor agrees to comply with any implementing requirements FTA may issue.

(3) The Contractor also agrees to include these requirements in each subcontract financed in whole or in part with Federal assistance provided by FTA, modified only if necessary to identify the affected parties.

Americans with Disabilities:

The recipient agrees to comply, and assures the compliance of each third party contractor and each subrecipient at any tier of the project, with the applicable laws and regulations, discussed below, for nondiscrimination on the basis of disability.

Page IV-14 FTA C 4220.1F 11/01/2008 Rev.1 – 04/14/2009; Rev.2 – 07/01/2010; Rev.3 – 02/15/2011

1. Section 504 of the Rehabilitation Act of 1973, as amended (Section 504), 29 U.S.C. Section 794, prohibits discrimination on the basis of disability by recipients of Federal financial assistance.

2. The Americans with Disabilities Act of 1990, as amended (ADA), 42 U.S.C. Sections 12101 *et seq*., prohibits discrimination against qualified individuals with disabilities in all programs, activities, and services of public entities, as well as imposes specific requirements on public and private providers of transportation.

3. DOT Public Transportation Regulations implementing Section 504 and the ADA. These regulations include DOT regulations, “Nondiscrimination on the Basis of Handicap in Programs and Activities Receiving or Benefiting from Federal Financial Assistance,” 49 CFR Part 27, DOT regulations, “Transportation Services for Individuals with Disabilities (ADA),” 49 CFR Part 37, and Architectural and Transportation Barriers Compliance Board (ATBCB)/DOT regulations, “Americans With Disabilities (ADA) Accessibility Specifications for Transportation Vehicles,” 36 CFR Part 1192 and 49 CFR Part 38. In addition the solicitation should also comply with: “DOT’s ADA Standards for Transportation Facilities (2206)” and the DOT ADA Final Rule 10/19/2011.

Examples of requirements include, but are not limited to, the following:

1. Design and Construction. Accessibility requirements for the design and construction of new transportation facilities.

2. Accessibility and Usability. Requirements that vehicles acquired (with limited exceptions) be accessible to and usable by individuals with disabilities, including individuals using wheelchairs;
3. Equal Opportunity. Requirements for compliance with service requirements intended to ensure that individuals with disabilities are afforded equal opportunity to use transportation systems and services.

Veterans Employment:

Recipients and subrecipients of Federal financial assistance under this chapter shall ensure that contractors working on a capital project funded using such assistance give a hiring preference, to the extent practicable, to veterans (as defined in section 2108 of title 5) who have the requisite skills and abilities to perform the construction work required under the contract. This subsection shall not be understood, construed or enforced in any manner that would require an employer to give a preference to any veteran over any equally qualified applicant who is a member of any racial or ethnic minority, female, an individual with a disability, or a former employee.

DISADVANTAGED BUSINESS ENTERPRISE (DBE)
49 CFR Part 26

Disadvantaged Business Enterprises

1. **Policy:** It is the policy of the Department of Transportation (DOT) that disadvantaged business enterprises as defined in 49 CFR Part 26, and as amended in Section 1061(c) of the Surface Transportation and Uniform Relocation Assistance Act of 1987, shall have the maximum opportunity to participate in the performance of contracts financed in whole or part with federal funds under this Agreement. Consequently, the DBE requirements of 49 CFR Part 26 and Section 1061(c) of the Surface Transportation and Uniform Relocation Assistance Act of 1987 apply to this Agreement.

2. **DBE Obligation:** The Contractor or its representative agrees to ensure that disadvantaged business enterprises as defined in 49 CFR Part 26 and Section 1061(c) of the Surface Transportation and Uniform Relocation Assistance Act of 1987 have the maximum opportunity to participate in the performance of contracts and subcontracts financed in whole or in part with federal funds provided under this Agreement. In this regard, the Contractor or its representative shall take all the necessary and reasonable steps in accordance with 49 CFR Part 26 and Section 1061(c) of the Surface Transportation and Uniform Relocation Assistance Act of 1987 to ensure that DBEs have the maximum opportunity to compete for and perform contracts. The Contractor shall not discriminate on the basis of race, religion, color, national origin, age, disability, or sex in the award and performance of DOT-assisted contracts. 49 CFR Part 26 and Section 1061(c) of the Surface Transportation and Uniform Relocation Assistance Act of 1987 apply to this Agreement.

a. This contract is subject to the requirements of Title 49, Code of Federal Regulations, Part 26, *Participation by Disadvantaged Business Enterprises in Department of Transportation Financial Assistance Programs.* The national goal for participation of Disadvantaged Business Enterprises is 10%. The agency overall goal for DBE participation is 4.99 %. Bidders/offerors are required to document sufficient DBE participation to meet these goals or, alternatively, document adequate good faith efforts to do so, as provided for in 49 CFR 26.53.

b. The contractor shall not discriminate on the basis of race, color, national origin, or sex in the performance of this contract. The contractor shall carry out applicable requirements of 49 CFR Part 26 in the award and administration of this DOT-assisted contract. Failure by the contractor to carry out these requirements is a material breach of this contract, which may result in the termination of this contract or such other remedy as The City of El Paso deems appropriate. Each subcontract the contractor signs with a subcontractor must include the assurance in this paragraph (*see* 49 CFR 26.13(b)).

The successful bidder/offeror will be required to report its DBE participation obtained through race-neutral means throughout the period of performance.

c. The contractor is required to pay its subcontractors performing work related to this contract for satisfactory performance of that work no later than 30 days after the contractor's receipt of payment for that work from The City of El Paso. In addition, Contractor is required to return any retainage payments to those subcontractors within 30 days after incremental acceptance of the subcontractor's work by The City of El Paso and contractor's receipt of the partial retainage payment related to the subcontractor's work.

d. The contractor must promptly notify The City of El Paso, whenever a DBE subcontractor performing work related to this contract is terminated or fails to complete its work, and must make good faith efforts to engage another DBE subcontractor to perform at least the same amount of work. The contractor may not terminate any DBE subcontractor and perform that work through its own forces or those of an affiliate without prior written consent of The City of El Paso.

INCORPORATION OF FEDERAL TRANSIT ADMINISTRATION (FTA) TERMS
FTA Circular 4220.1F

Incorporation of Federal Transit Administration (FTA) Terms - The preceding provisions include, in part, certain Standard Terms and Conditions required by DOT, whether or not expressly set forth in the preceding contract provisions. All contractual provisions required by DOT, as set forth in FTA Circular 4220.1F, are hereby incorporated by reference. Anything to the contrary herein notwithstanding, all FTA mandated terms shall be deemed to control in the event of a conflict with other provisions contained in this Agreement. The Contractor shall not perform any act, fail to perform any act, or refuse to comply with any (name of grantee) requests which would cause (name of grantee) to be in violation of the FTA terms and conditions.

GOVERNMENT-WIDE DEBARMENT AND SUSPENSION (NONPROCUREMENT)

Suspension and Debarment

This contract is a covered transaction for purposes of 49 CFR Part 29. As such, the contractor is required to verify that none of the contractor, its principals, as defined at 49 CFR 29.995, or affiliates, as defined at 49 CFR 29.905, are excluded or disqualified as defined at 49 CFR 29.940 and 29.945.

The contractor is required to comply with 49 CFR 29, Subpart C and must include the requirement to comply with 49 CFR 29, Subpart C in any lower tier covered transaction it enters into.

By signing and submitting its bid or proposal, the bidder or proposer certifies as follows:

The certification in this clause is a material representation of fact relied upon by The City of El Paso. If it is later determined that the bidder or proposer knowingly rendered an erroneous certification, in addition to remedies available to The City of El Paso, the Federal Government may pursue available remedies, including but not limited to suspension and/or debarment. The bidder or proposer agrees to comply with the requirements of 49 CFR 29, Subpart C while this offer is valid and throughout the period of any contract that may arise from this offer. The bidder or proposer further agrees to include a provision requiring such compliance in its lower tier covered transactions.

BUY AMERICA REQUIREMENTS
49 U.S.C. 5323(j)
49 CFR Part 661

Buy America - The contractor agrees to comply with 49 U.S.C. 5323(j) and 49 C.F.R. Part 661, which provide that Federal funds may not be obligated unless steel, iron, and manufactured products used in FTA-funded projects are produced in the United States, unless a waiver has been granted by FTA or the product is subject to a general waiver. General waivers are listed in 49 C.F.R. 661.7, and include final assembly in the United States for 15 passenger vans and 15 passenger wagons produced by Chrysler Corporation, and microcomputer equipment and software. Separate requirements for rolling stock are set out at 49 U.S.C. 5323(j)(2)(C) and 49 C.F.R. 661.11. Rolling stock must be assembled in the United States and have a 60 percent domestic content.

A bidder or offeror must submit to the FTA recipient the appropriate Buy America certification (below) with all bids or offers on FTA-funded contracts, except those subject to a general waiver. Bids or offers that are not accompanied by a completed Buy America certification must be rejected as nonresponsive. This requirement does not apply to lower tier subcontractors.

If the Contractor has any questions or becomes aware of any issue that may potentially cause non-compliance with Buy America requirements as set forth within 23 CFR 635.410 and 49 CFR 661, respectively, the Contractor shall be required to comply with the Federal Buy America requirements of 49 CFR 661.

BUY AMERICA CERTIFICATION

Certification requirement for procurement of steel, iron, or manufactured products.

Certificate of Compliance with 49 U.S.C. 5323(j)

The bidder or offeror hereby certifies that it will meet the requirements of 49 U.S.C. 5323(j) and the applicable regulations in 49 C.F.R. Part 661.5.

Date _____

Signature _____

Company Name_____

Title _____

Certificate of Non-Compliance with 49 U.S.C. 5323(j)

The bidder or offeror hereby certifies that it cannot comply with the requirements of 49 U.S.C. 5323(j) and 49 C.F.R. 661.5, but it may qualify for an exception pursuant to 49 U.S.C. 5323(j)(2)(A), 5323(j)(2)(B), or 5323(j)(2)(D), and 49 C.F.R. 661.7.

Date _____

Signature _____

Company Name _____

Title _____

Certification requirement for procurement of buses, other rolling stock and associated equipment.

Certificate of Compliance with 49 U.S.C. 5323(j)(2)(C).

The bidder or offeror hereby certifies that it will comply with the requirements of 49 U.S.C. 5323(j)(2)(C) and the regulations at 49 C.F.R. Part 661.11.

Date _____

Signature _____

Company Name _____

Title _____

Certificate of Non-Compliance with 49 U.S.C. 5323(j)(2)(C)

The bidder or offeror hereby certifies that it cannot comply with the requirements of 49 U.S.C. 5323(j)(2)(C) and 49 C.F.R. 661.11, but may qualify for an exception pursuant to 49 U.S.C. 5323(j)(2)(A), 5323(j)(2)(B), or 5323(j)(2)(D), and 49 CFR 661.7.

Date _____

FLY AMERICA REQUIREMENTS
49 U.S.C. § 40118
41 CFR Part 301-10

Fly America Requirements

The Contractor agrees to comply with 49 U.S.C. 40118 (the "Fly America" Act) in accordance with the General Services Administration's regulations at 41 CFR Part 301-10, which provide that recipients and subrecipients of Federal funds and their contractors are required to use U.S. Flag air carriers for U.S Government-financed international air travel and transportation of their personal effects or property, to the extent such service is available, unless travel by foreign air carrier is a matter of necessity, as defined by the Fly America Act. The Contractor shall submit, if a foreign air carrier was used, an appropriate certification or memorandum adequately explaining why service by a U.S. flag air carrier was not available or why it was necessary to use a foreign air carrier and shall, in any event, provide a certificate of compliance with the Fly America requirements. The Contractor agrees to include the requirements of this section in all subcontracts that may involve international air transportation.

BREACHES AND DISPUTE RESOLUTION
49 CFR Part 18
FTA Circular 4220.1F

Disputes - Disputes arising in the performance of this Contract which are not resolved by agreement of the parties shall be decided in writing by the authorized representative of (Recipient)'s [title of employee]. This decision shall be final and conclusive unless within [ten (10)] days from the date of receipt of its copy, the Contractor mails or otherwise furnishes a written appeal to the [title of employee]. In connection with any such appeal, the Contractor shall be afforded an opportunity to be heard and to offer evidence in support of its position. The decision of the [title of employee] shall be binding upon the Contractor and the Contractor shall abide be the decision.

Performance During Dispute - Unless otherwise directed by (Recipient), Contractor shall continue performance under this Contract while matters in dispute are being resolved.

Claims for Damages - Should either party to the Contract suffer injury or damage to person or property because of any act or omission of the party or of any of his employees, agents or others for whose acts he is legally liable, a claim for damages therefor shall be made in writing to such other party within a reasonable time after the first observance of such injury of damage.

Remedies - Unless this contract provides otherwise, all claims, counterclaims, disputes and other matters in question between the (Recipient) and the Contractor arising out of or relating to this agreement or its breach will be decided by arbitration if the parties mutually agree, or in a court of competent jurisdiction within the State in which the (Recipient) is located.

Rights and Remedies - The duties and obligations imposed by the Contract Documents and the rights and remedies available thereunder shall be in addition to and not a limitation of any duties, obligations, rights and remedies otherwise imposed or available by law. No action or failure to act by the (Recipient), (Architect) or Contractor shall constitute a waiver of any right or duty afforded any of them under the Contract, nor shall any such action or failure to act constitute an approval of or acquiescence in any breach thereunder, except as may be specifically agreed in writing.

LOBBYING
31 U.S.C. 1352
49 CFR Part 19
49 CFR Part 20

Byrd Anti-Lobbying Amendment, 31 U.S.C. 1352, as amended by the Lobbying Disclosure Act of 1995, P.L. 104-65 [to be codified at 2 U.S.C. § 1601, et seq.] - Contractors who apply or bid for an award of $100,000 or more shall file the certification required by 49 CFR part 20, "New Restrictions on Lobbying." Each tier certifies to the tier above that it will not and has not used Federal appropriated funds to pay any person or organization for influencing or attempting to influence an officer or employee of any agency, a member of Congress, officer or employee of Congress, or an employee of a member of Congress in connection with obtaining any Federal contract, grant or any other award covered by 31 U.S.C. 1352. Each tier shall also disclose the name of any registrant under the Lobbying Disclosure Act of 1995 who has made lobbying contacts on its behalf with non-Federal funds with respect to that Federal contract, grant or award covered by 31 U.S.C. 1352. Such disclosures are forwarded from tier to tier up to the recipient.

APPENDIX A, 49 CFR PART 20--CERTIFICATION REGARDING LOBBYING

Certification for Contracts, Grants, Loans, and Cooperative Agreements

(To be submitted with each bid or offer exceeding $100,000)

The undersigned [Contractor] certifies, to the best of his or her knowledge and belief, that:

(1) No Federal appropriated funds have been paid or will be paid, by or on behalf of the undersigned, to any person for influencing or attempting to influence an officer or employee of an agency, a Member of Congress, an officer or employee of Congress, or an employee of a Member of Congress in connection with the awarding of any Federal contract, the making of any Federal grant, the making of any Federal loan, the entering into of any cooperative agreement, and the extension, continuation, renewal, amendment, or modification of any Federal contract, grant, loan, or cooperative agreement.

(2) If any funds other than Federal appropriated funds have been paid or will be paid to any person for making lobbying contacts to an officer or employee of any agency, a Member of Congress, an officer or employee of Congress, or an employee of a Member of Congress in connection with this Federal contract, grant, loan, or cooperative agreement, the undersigned shall complete and submit Standard Form--LLL, "Disclosure Form to Report Lobbying," in accordance with its instructions [as amended by "Government wide Guidance for New Restrictions on Lobbying," 61 Fed. Reg. 1413 (1/19/96). Note: Language in paragraph (2) herein has been modified in accordance with Section 10 of the Lobbying Disclosure Act of 1995 (P.L. 104-65, to be codified at 2 U.S.C. 1601, *et seq.*)]

(3) The undersigned shall require that the language of this certification be included in the award documents for all subawards at all tiers (including subcontracts, subgrants, and contracts under grants, loans, and cooperative agreements) and that all subrecipients shall certify and disclose accordingly.

This certification is a material representation of fact upon which reliance was placed when this transaction was made or entered into. Submission of this certification is a prerequisite for making or entering into this transaction imposed by 31, U.S.C. § 1352 (as amended by the Lobbying Disclosure Act of 1995). Any person who fails to file the required certification shall be subject to a civil penalty of not less than $10,000 and not more than $100,000 for each such failure.

[Note: Pursuant to 31 U.S.C. § 1352(c)(1)-(2)(A), any person who makes a prohibited expenditure or fails to file or amend a required certification or disclosure form shall be subject to a civil penalty of not less than $10,000 and not more than $100,000 for each such expenditure or failure.]

The Contractor, _____, certifies or affirms the truthfulness and accuracy of each statement of its certification and disclosure, if any. In addition, the Contractor understands and agrees that the provisions of 31 U.S.C. A 3801, *et seq.,* apply to this certification and disclosure, if any.

_____ Signature of Contractor's Authorized Official

_____ Name and Title of Contractor's Authorized Official

_____ Date

CLEAN AIR
42 U.S.C. 7401 et seq
40 CFR 15.61
49 CFR Part 18

Clean Air - (1) The Contractor agrees to comply with all applicable standards, orders or regulations issued pursuant to the Clean Air Act, as amended, 42 U.S.C. §§ 7401 et seq. The Contractor agrees to report each violation to the Purchaser and understands and agrees that the Purchaser will, in turn, report each violation as required to assure notification to FTA and the appropriate EPA Regional Office.

(2) The Contractor also agrees to include these requirements in each subcontract exceeding $100,000 financed in whole or in part with Federal assistance provided by FTA.

CLEAN WATER REQUIREMENTS
33 U.S.C. 1251

Clean Water - (1) The Contractor agrees to comply with all applicable standards, orders or regulations issued pursuant to the Federal Water Pollution Control Act, as amended, 33 U.S.C. 1251 et seq. The Contractor agrees to report each violation to the Purchaser and understands and agrees that the Purchaser will, in turn, report each violation as required to assure notification to FTA and the appropriate EPA Regional Office.

(2) The Contractor also agrees to include these requirements in each subcontract exceeding $100,000 financed in whole or in part with Federal assistance provided by FTA.

CARGO PREFERENCE REQUIREMENTS
46 U.S.C. 1241
46 CFR Part 381

Cargo Preference - Use of United States-Flag Vessels - The contractor agrees: a. to use privately owned United States-Flag commercial vessels to ship at least 50 percent of the gross tonnage (computed separately for dry bulk carriers, dry cargo liners, and tankers) involved, whenever shipping any equipment, material, or commodities pursuant to the underlying contract to the extent such vessels are available at fair and reasonable rates for United States-Flag commercial vessels; b. to furnish within 20 working days following the date of loading for shipments originating within the United States or within 30 working days following the date of leading for shipments originating outside the United States, a legible copy of a rated, "on-board" commercial ocean bill-of -lading in English for each shipment of cargo described in the preceding paragraph to the Division of National Cargo, Office of Market Development, Maritime Administration, Washington, DC 20590 and to the FTA recipient (through the contractor in the case of a subcontractor's bill-of-lading.) c. to include these requirements in all subcontracts issued pursuant to this contract when the subcontract may involve the transport of equipment, material, or commodities by ocean vessel.

DAVIS-BACON AND COPELAND ANTI-KICKBACK ACTS

Clause Language

(1) **Minimum wages** - (i) All laborers and mechanics employed or working upon the site of the work (or under the United States Housing Act of 1937 or under the Housing Act of 1949 in the construction or development of the project), will be paid unconditionally and not less often than once a week, and without subsequent deduction or rebate on any account (except such payroll deductions as are permitted by regulations issued by the Secretary of Labor under the Copeland Act

(29 CFR part 3)), the full amount of wages and bona fide fringe benefits (or cash equivalents thereof) due at time of payment computed at rates not less than those contained in the wage determination of the Secretary of Labor which is attached hereto and made a part hereof, regardless of any contractual relationship which may be alleged to exist between the contractor and such laborers and mechanics.

Contributions made or costs reasonably anticipated for bona fide fringe benefits under section 1(b)(2) of the Davis-Bacon Act on behalf of laborers or mechanics are considered wages paid to such laborers or mechanics, subject to the provisions of paragraph (1)(iv) of this section; also, regular contributions made or costs incurred for more than a weekly period (but not less often than quarterly) under plans, funds, or programs which cover the particular weekly period, are deemed to be constructively made or incurred during such weekly period. Such laborers and mechanics shall be paid the appropriate wage rate and fringe benefits on the wage determination for the classification of work actually performed, without regard to skill, except as provided in 29 CFR Part 5.5(a)(4). Laborers or mechanics performing work in more than one classification may be compensated at the rate specified for each classification for the time actually worked therein: Provided, That the employer's payroll records accurately set forth the time spent in each classification in which work is performed. The wage determination (including any additional classifications and wage rates conformed under paragraph (1)(ii) of this section) and the Davis-Bacon poster (WH-1321) shall be posted at all times by the contractor and its subcontractors at the site of the work in a prominent and accessible place where it can be easily seen by the workers.

(ii)(A) The contracting officer shall require that any class of laborers or mechanics, including helpers, which is not listed in the wage determination and which is to be employed under the contract shall be classified in conformance with the wage determination. The contracting officer shall approve an additional classification and wage rate and fringe benefits therefore only when the following criteria have been met:

(1) Except with respect to helpers as defined as 29 CFR 5.2(n)(4), the work to be performed by the classification requested is not performed by a classification in the wage determination; and

(2) The classification is utilized in the area by the construction industry; and

(3) The proposed wage rate, including any bona fide fringe benefits, bears a reasonable relationship to the wage rates contained in the wage determination; and

(4) With respect to helpers as defined in 29 CFR 5.2(n)(4), such a classification prevails in the area in which the work is performed.

(B) If the contractor and the laborers and mechanics to be employed in the classification (if known), or their representatives, and the contracting officer agree on the classification and wage rate (including the amount designated for fringe benefits where appropriate), a report of the action taken shall be sent by the contracting officer to the Administrator of the Wage and Hour Division, Employment Standards Administration, U.S. Department of Labor, Washington, DC 20210. The Administrator, or an authorized representative, will approve, modify, or disapprove every additional classification action within 30 days of receipt and so advise the contracting officer or will notify the contracting officer within the 30-day period that additional time is necessary.

(C) In the event the contractor, the laborers or mechanics to be employed in the classification or their representatives, and the contracting officer do not agree on the proposed classification and wage rate (including the amount designated for fringe benefits, where appropriate), the contracting officer shall refer the questions, including the views of all interested parties and the recommendation of the contracting officer, to the Administrator for determination. The Administrator, or an authorized

representative, will issue a determination within 30 days of receipt and so advise the contracting officer or will notify the contracting officer within the 30-day period that additional time is necessary.

(D) The wage rate (including fringe benefits where appropriate) determined pursuant to paragraphs (a)(1)(ii) (B) or (C) of this section, shall be paid to all workers performing work in the classification under this contract from the first day on which work is performed in the classification.

(iii) Whenever the minimum wage rate prescribed in the contract for a class of laborers or mechanics includes a fringe benefit which is not expressed as an hourly rate, the contractor shall either pay the benefit as stated in the wage determination or shall pay another bona fide fringe benefit or an hourly cash equivalent thereof.

(iv) If the contractor does not make payments to a trustee or other third person, the contractor may consider as part of the wages of any laborer or mechanic the amount of any costs reasonably anticipated in providing bona fide fringe benefits under a plan or program, Provided, That the Secretary of Labor has found, upon the written request of the contractor, that the applicable standards of the Davis-Bacon Act have been met. The Secretary of Labor may require the contractor to set aside in a separate account assets for the meeting of obligations under the plan or program.

(v)(A) The contracting officer shall require that any class of laborers or mechanics which is not listed in the wage determination and which is to be employed under the contract shall be classified in conformance with the wage determination. The contracting officer shall approve an additional classification and wage rate and fringe benefits therefor only when the following criteria have been met:

(1) The work to be performed by the classification requested is not performed by a classification in the wage determination; and

(2) The classification is utilized in the area by the construction industry; and

(3) The proposed wage rate, including any bona fide fringe benefits, bears a reasonable relationship to the wage rates contained in the wage determination.

(B) If the contractor and the laborers and mechanics to be employed in the classification (if known), or their representatives, and the contracting officer agree on the classification and wage rate (including the amount designated for fringe benefits where appropriate), a report of the action taken shall be sent by the contracting officer to the Administrator of the Wage and Hour Division, Employment Standards Administration, Washington, DC 20210. The Administrator, or an authorized representative, will approve, modify, or disapprove every additional classification action within 30 days of receipt and so advise the contracting officer or will notify the contracting officer within the 30-day period that additional time is necessary.

(C) In the event the contractor, the laborers or mechanics to be employed in the classification or their representatives, and the contracting officer do not agree on the proposed classification and wage rate (including the amount designated for fringe benefits, where appropriate), the contracting officer shall refer the questions, including the views of all interested parties and the recommendation of the contracting officer, to the Administrator for determination. The Administrator, or an authorized representative, will issue a determination with 30 days of receipt and so advise the contracting officer or will notify the contracting officer within the 30-day period that additional time is necessary.

(D) The wage rate (including fringe benefits where appropriate) determined pursuant to paragraphs (a)(1)(v) (B) or (C) of this section, shall be paid to all workers performing work in the

classification under this contract from the first day on which work is performed in the classification.

(2) **Withholding** - The Mass Transit Department-Sun Metro shall upon its own action or upon written request of an authorized representative of the Department of Labor withhold or cause to be withheld from the contractor under this contract or any other Federal contract with the same prime contractor, or any other federally-assisted contract subject to Davis-Bacon prevailing wage requirements, which is held by the same prime contractor, so much of the accrued payments or advances as may be considered necessary to pay laborers and mechanics, including apprentices, trainees, and helpers, employed by the contractor or any subcontractor the full amount of wages required by the contract. In the event of failure to pay any laborer or mechanic, including any apprentice, trainee, or helper, employed or working on the site of the work (or under the United States Housing Act of 1937 or under the Housing Act of 1949 in the construction or development of the project), all or part of the wages required by the contract, the Mass Transit Department-Sun Metro may, after written notice to the contractor, sponsor, applicant, or owner, take such action as may be necessary to cause the suspension of any further payment, advance, or guarantee of funds until such violations have ceased.

(3) **Payrolls and basic records** - (i) Payrolls and basic records relating thereto shall be maintained by the contractor during the course of the work and preserved for a period of three years thereafter for all laborers and mechanics working at the site of the work (or under the United States Housing Act of 1937, or under the Housing Act of 1949, in the construction or development of the project). Such records shall contain the name, address, and social security number of each such worker, his or her correct classification, hourly rates of wages paid (including rates of contributions or costs anticipated for bona fide fringe benefits or cash equivalents thereof of the types described in section 1(b)(2)(B) of the Davis-Bacon Act), daily and weekly number of hours worked, deductions made and actual wages paid. Whenever the Secretary of Labor has found under 29 CFR 5.5(a)(1)(iv) that the wages of any laborer or mechanic include the amount of any costs reasonably anticipated in providing benefits under a plan or program described in section 1(b)(2)(B) of the Davis-Bacon Act, the contractor shall maintain records which show that the commitment to provide such benefits is enforceable, that the plan or program is financially responsible, and that the plan or program has been communicated in writing to the laborers or mechanics affected, and records which show the costs anticipated or the actual cost incurred in providing such benefits. Contractors employing apprentices or trainees under approved programs shall maintain written evidence of the registration of apprenticeship programs and certification of trainee programs, the registration of the apprentices and trainees, and the ratios and wage rates prescribed in the applicable programs.

(ii)(A) The contractor shall submit weekly for each week in which any contract work is performed a copy of all payrolls to the Mass Transit Department – Sun Metro for transmission to the Federal Transit Administration. The payrolls submitted shall set out accurately and completely all of the information required to be maintained under section 5.5(a)(3)(i) of Regulations, 29 CFR part 5. This information may be submitted in any form desired. Optional Form WH-347 is available for this purpose and may be purchased from the Superintendent of Documents (Federal Stock Number 029-005-00014-1), U.S. Government Printing Office, Washington, DC 20402. The prime contractor is responsible for the submission of copies of payrolls by all subcontractors.

(B) Each payroll submitted shall be accompanied by a "Statement of Compliance," signed by the contractor or subcontractor or his or her agent who pays or supervises the payment of the persons employed under the contract and shall certify the following:

(1) That the payroll for the payroll period contains the information required to be maintained under section 5.5(a)(3)(i) of Regulations, 29 CFR part 5 and that such information is correct and complete;

(2) That each laborer or mechanic (including each helper, apprentice, and trainee) employed on the

contract during the payroll period has been paid the full weekly wages earned, without rebate, either directly or indirectly, and that no deductions have been made either directly or indirectly from the full wages earned, other than permissible deductions as set forth in Regulations, 29 CFR part 3;

(3) That each laborer or mechanic has been paid not less than the applicable wage rates and fringe benefits or cash equivalents for the classification of work performed, as specified in the applicable wage determination incorporated into the contract.

(C) The weekly submission of a properly executed certification set forth on the reverse side of Optional Form WH-347 shall satisfy the requirement for submission of the "Statement of Compliance" required by paragraph (a)(3)(ii)(B) of this section.

(D) The falsification of any of the above certifications may subject the contractor or subcontractor to civil or criminal prosecution under section 1001 of title 18 and section 231 of title 31 of the United States Code.

(iii) The contractor or subcontractor shall make the records required under paragraph (a)(3)(i) of this section available for inspection, copying, or transcription by authorized representatives of the Federal Transit Administration or the Department of Labor, and shall permit such representatives to interview employees during working hours on the job. If the contractor or subcontractor fails to submit the required records or to make them available, the Federal agency may, after written notice to the contractor, sponsor, applicant, or owner, take such action as may be necessary to cause the suspension of any further payment, advance, or guarantee of funds. Furthermore, failure to submit the required records upon request or to make such records available may be grounds for debarment action pursuant to 29 CFR 5.12.

(4) **Apprentices and trainees** - (i) Apprentices - Apprentices will be permitted to work at less than the predetermined rate for the work they performed when they are employed pursuant to and individually registered in a bona fide apprenticeship program registered with the U.S. Department of Labor, Employment and Training Administration, Bureau of Apprenticeship and Training, or with a State Apprenticeship Agency recognized by the Bureau, or if a person is employed in his or her first 90 days of probationary employment as an apprentice in such an apprenticeship program, who is not individually registered in the program, but who has been certified by the Bureau of Apprenticeship and Training or a State Apprenticeship Agency (where appropriate) to be eligible for probationary employment as an apprentice. The allowable ratio of apprentices to journeymen on the job site in any craft classification shall not be greater than the ratio permitted to the contractor as to the entire work force under the registered program. Any worker listed on a payroll at an apprentice wage rate, who is not registered or otherwise employed as stated above, shall be paid not less than the applicable wage rate on the wage determination for the classification of work actually performed. In addition, any apprentice performing work on the job site in excess of the ratio permitted under the registered program shall be paid not less than the applicable wage rate on the wage determination for the work actually performed. Where a contractor is performing construction on a project in a locality other than that in which its program is registered, the ratios and wage rates (expressed in percentages of the journeyman's hourly rate) specified in the contractor's or subcontractor's registered program shall be observed. Every apprentice must be paid at not less than the rate specified in the registered program for the apprentice's level of progress, expressed as a percentage of the journeymen hourly rate specified in the applicable wage determination. Apprentices shall be paid fringe benefits in accordance with the provisions of the apprenticeship program. If the apprenticeship program does not specify fringe benefits, apprentices must be paid the full amount of fringe benefits listed on the wage determination for the applicable classification. If the Administrator of the Wage and Hour Division of the U.S. Department of Labor determines that a different practice prevails for the applicable apprentice classification, fringes shall be paid in accordance with that determination. In the event the Bureau of Apprenticeship and Training, or a State Apprenticeship

Agency recognized by the Bureau, withdraws approval of an apprenticeship program, the contractor will no longer be permitted to utilize apprentices at less than the applicable predetermined rate for the work performed until an acceptable program is approved.

(ii) Trainees - Except as provided in 29 CFR 5.16, trainees will not be permitted to work at less than the predetermined rate for the work performed unless they are employed pursuant to and individually registered in a program which has received prior approval, evidenced by formal certification by the U.S. Department of Labor, Employment and Training Administration. The ratio of trainees to journeymen on the job site shall not be greater than permitted under the plan approved by the Employment and Training Administration. Every trainee must be paid at not less than the rate specified in the approved program for the trainee's level of progress, expressed as a percentage of the journeyman hourly rate specified in the applicable wage determination. Trainees shall be paid fringe benefits in accordance with the provisions of the trainee program. If the trainee program does not mention fringe benefits, trainees shall be paid the full amount of fringe benefits listed on the wage determination unless the Administrator of the Wage and Hour Division determines that there is an apprenticeship program associated with the corresponding journeyman wage rate on the wage determination which provides for less than full fringe benefits for apprentices. Any employee listed on the payroll at a trainee rate who is not registered and participating in a training plan approved by the Employment and Training Administration shall be paid not less than the applicable wage rate on the wage determination for the classification of work actually performed. In addition, any trainee performing work on the job site in excess of the ratio permitted under the registered program shall be paid not less than the applicable wage rate on the wage determination for the work actually performed. In the event the Employment and Training Administration withdraws approval of a training program, the contractor will no longer be permitted to utilize trainees at less than the applicable predetermined rate for the work performed until an acceptable program is approved.

(iii) Equal employment opportunity - The utilization of apprentices, trainees and journeymen under this part shall be in conformity with the equal employment opportunity requirements of Executive Order 11246, as amended, and 29 CFR part 30.

(5) **Compliance with Copeland Act requirements** - The contractor shall comply with the requirements of 29 CFR part 3, which are incorporated by reference in this contract.

(6) **Subcontracts** - The contractor or subcontractor shall insert in any subcontracts the clauses contained in 29 CFR 5.5(a)(1) through (10) and such other clauses as the Federal Transit Administration may by appropriate instructions require, and also a clause requiring the subcontractors to include these clauses in any lower tier subcontracts. The prime contractor shall be responsible for the compliance by any subcontractor or lower tier subcontractor with all the contract clauses in 29 CFR 5.5.

(7) **Contract termination: debarment** - A breach of the contract clauses in 29 CFR 5.5 may be grounds for termination of the contract, and for debarment as a contractor and a subcontractor as provided in 29 CFR 5.12.

(8) **Compliance with Davis-Bacon and Related Act requirements** - All rulings and interpretations of the Davis-Bacon and Related Acts contained in 29 CFR parts 1, 3, and 5 are herein incorporated by reference in this contract.

(9) **Disputes concerning labor standards** - Disputes arising out of the labor standards provisions of this contract shall not be subject to the general disputes clause of this contract. Such disputes shall be resolved in accordance with the procedures of the Department of Labor set forth in 29 CFR

parts 5, 6, and 7. Disputes within the meaning of this clause include disputes between the contractor (or any of its subcontractors) and the contracting agency, the U.S. Department of Labor, or the employees or their representatives.

(10) **Certification of eligibility** - (i) By entering into this contract, the contractor certifies that neither it (nor he or she) nor any person or firm who has an interest in the contractor's firm is a person or firm ineligible to be awarded Government contracts by virtue of section 3(a) of the Davis-Bacon Act or 29 CFR 5.12(a)(1).

(ii) No part of this contract shall be subcontracted to any person or firm ineligible for award of a Government contract by virtue of section 3(a) of the Davis-Bacon Act or 29 CFR 5.12(a)(1).

(iii) The penalty for making false statements is prescribed in the U.S. Criminal Code, 18 U.S.C. 1001.

CONTRACT WORK HOURS AND SAFETY STANDARDS ACT
40 USC 3701, *et seq*

(1) **Overtime requirements** - No contractor or subcontractor contracting for any part of the contract work which may require or involve the employment of laborers or mechanics shall require or permit any such laborer or mechanic in any workweek in which he or she is employed on such work to work in excess of forty hours in such workweek unless such laborer or mechanic receives compensation at a rate not less than one and one-half times the basic rate of pay for all hours worked in excess of forty hours in such workweek.

(2) **Violation; liability for unpaid wages; liquidated damages** - In the event of any violation of the clause set forth in paragraph (1) of this section the contractor and any subcontractor responsible therefor shall be liable for the unpaid wages. In addition, such contractor and subcontractor shall be liable to the United States for liquidated damages. Such liquidated damages shall be computed with respect to each individual laborer or mechanic, including watchmen and guards, employed in violation of the clause set forth in paragraph (1) of this section, in the sum of $10 for each calendar day on which such individual was required or permitted to work in excess of the standard workweek of forty hours without payment of the overtime wages required by the clause set forth in paragraph (1) of this section.

(3) **Withholding for unpaid wages and liquidated damages** - The (***write in the name of the grantee***) shall upon its own action or upon written request of an authorized representative of the Department of Labor withhold or cause to be withheld, from any moneys payable on account of work performed by the contractor or subcontractor under any such contract or any other Federal contract with the same prime contractor, or any other federally-assisted contract subject to the Contract Work Hours and Safety Standards Act, which is held by the same prime contractor, such sums as may be determined to be necessary to satisfy any liabilities of such contractor or subcontractor for unpaid wages and liquidated damages as provided in the clause set forth in paragraph (2) of this section.

(4) **Subcontracts** - The contractor or subcontractor shall insert in any subcontracts the clauses set forth in paragraphs (1) through (4) of this section and also a clause requiring the subcontractors to include these clauses in any lower tier subcontracts. The prime contractor shall be responsible for compliance by any subcontractor or lower tier subcontractor with the clauses set forth in paragraphs (1) through (4) of this section.

BONDING REQUIREMENTS

Bid Bond Requirements (Construction)

(a) Bid Security

A Bid Bond must be issued by a fully qualified surety company acceptable to (Recipient) and listed as a company currently authorized under 31 CFR, Part 223 as possessing a Certificate of Authority as described thereunder.

(b) Rights Reserved

In submitting this Bid, it is understood and agreed by bidder that the right is reserved by (Recipient) to reject any and all bids, or part of any bid, and it is agreed that the Bid may not be withdrawn for a period of [ninety (90)] days subsequent to the opening of bids, without the written consent of (Recipient).

It is also understood and agreed that if the undersigned bidder should withdraw any part or all of his bid within [ninety (90)] days after the bid opening without the written consent of (Recipient), shall refuse or be unable to enter into this Contract, as provided above, or refuse or be unable to furnish adequate and acceptable Performance Bonds and Labor and Material Payments Bonds, as provided above, or refuse or be unable to furnish adequate and acceptable insurance, as provided above, he shall forfeit his bid security to the extent of (Recipient's) damages occasioned by such withdrawal, or refusal, or inability to enter into an agreement, or provide adequate security therefore.

It is further understood and agreed that to the extent the defaulting bidder's Bid Bond, Certified Check, Cashier's Check, Treasurer's Check, and/or Official Bank Check (excluding any income generated thereby which has been retained by (Recipient) as provided in [Item x "Bid Security" of the Instructions to Bidders]) shall prove inadequate to fully recompense (Recipient) for the damages occasioned by default, then the undersigned bidder agrees to indemnify (Recipient) and pay over to (Recipient) the difference between the bid security and (Recipient's) total damages, so as to make (Recipient) whole.

The undersigned understands that any material alteration of any of the above or any of the material contained on this form, other than that requested, will render the bid unresponsive.

Performance and Payment Bonding Requirements (Construction)

The Contractor shall be required to obtain performance and payment bonds as follows:

(a) Performance bonds

1. The penal amount of performance bonds shall be 100 percent of the original contract price, unless the (Recipient) determines that a lesser amount would be adequate for the protection of the (Recipient).

2. The (Recipient) may require additional performance bond protection when a contract price is increased. The increase in protection shall generally equal 100 percent of the increase in contract price. The (Recipient) may secure additional protection by directing the Contractor to increase the penal amount of the existing bond or to obtain an additional bond.

(b) Payment bonds

1. The penal amount of the payment bonds shall equal:

(i) Fifty percent of the contract price if the contract price is not more than $1 million.

(ii) Forty percent of the contract price if the contract price is more than $1 million but not more than $5 million; or

(iii) Two and one half million if the contract price is more than $5 million.

2. If the original contract price is $5 million or less, the (Recipient) may require additional protection as required by subparagraph 1 if the contract price is increased.

RECYCLED PRODUCTS
42 U.S.C. 6962
40 CFR Part 247
Executive Order 12873

Recovered Materials - The contractor agrees to comply with all the requirements of Section 6002 of the Resource Conservation and Recovery Act (RCRA), as amended (42 U.S.C. 6962), including but not limited to the regulatory provisions of 40 CFR Part 247, and Executive Order 12873, as they apply to the procurement of the items designated in Subpart B of 40 CFR Part 247.

ITS PROJECTS
ITS NATIONAL ARCHITECTURE

49 CFR Part 613
49 CFR Part 614
23 CFR Part 450

ITS projects shall conform to the National ITS Architecture and standards in accordance with the requirements contained in this part. Conformance with the National ITS Architecture is interpreted to mean the use of the National ITS Architecture to develop a regional ITS architecture in support of integration and the subsequent adherence of all ITS projects to that regional ITS architecture. Development of the regional ITS architecture should be consistent with the transportation planning process for Statewide and Metropolitan Transportation Planning (49 CFR Part 613 and 614).

SCHOOL BUS REQUIREMENTS
49 U.S.C. 5323(F)
49 CFR Part 605

School Bus Operations - Pursuant to 69 U.S.C. 5323(f) and 49 CFR Part 605, recipients and subrecipients of FTA assistance may not engage in school bus operations exclusively for the transportation of students and school personnel in competition with private school bus operators unless qualified under specified exemptions. When operating exclusive school bus service under an allowable exemption, recipients and subrecipients may not use federally funded equipment, vehicles, or facilities.

CHARTER BUS REQUIREMENTS
49 U.S.C. 5323(d)
49 CFR Part 604

Charter Service Operations - The contractor agrees to comply with 49 U.S.C. 5323(d) and 49 CFR Part 604, which provides that recipients and subrecipients of FTA assistance are prohibited from providing charter service using federally funded equipment or facilities if there is at least one private charter operator willing and able to provide the service, except under one of the exceptions at 49 CFR 604.9. Any charter service provided under one of the exceptions must be "incidental," i.e., it must not interfere with or detract from the provision of mass transportation.

ENERGY CONSERVATION REQUIREMENTS
42 U.S.C. 6321 et seq.
49 CFR Part 18

Energy Conservation - The contractor agrees to comply with mandatory standards and policies relating to energy efficiency which are contained in the state energy conservation plan issued in compliance with the Energy Policy and Conservation Act.

EQUAL EMPLOYMENT OPPORTUNITY REQUIREMENTS

1. **GOALS:** The goals and timetables for minority and female participation, expressed in percentage terms for the contractor's aggregate workforce in each trade on all construction work in the covered area, are as follows:

Goal For Minority Participation For Each Trade	Goals For Female Participation For Each Trade
57.8%	6.9%

These goals are applicable to all the contractor's construction work, whether or not it is federal or federally assisted, performed in the covered area and are percentages of total hours of employment.

The contractor's compliance with the Executive Order and the regulations in 41 CFR Part 60-4 shall be based on its implementation of the Equal Opportunity Clause, specific affirmative action obligations required by the specifications set forth in 41 CFR 60-4.3(a), and its efforts to meet the goals established for the covered area. The hours of minority and female employment and training must be substantially uniform throughout the length of the contract, and in each trade, and the contractor shall make a good faith effort to employ minorities and women evenly on each of its projects. The transfer of minority or female employees or trainees from contractor to contractor or from project to project for the sole purpose of meeting the contractor's goals shall be a violation of the Contract, the Executive Order and the Regulations in 41 CFR Part 60-4. Compliance with the goals will be measured against the total work hours performed.

2. **NOTICE:** The contractor shall provide written notification to the Director of the Office of Federal Contract Compliance Programs within 10 working days of award of any construction subcontract in excess of $10,000 at any tier for construction work under the contract resulting from this solicitation. The notification shall list the name, address and telephone number of the subcontractor; employer identification number; estimated dollar amount of the subcontract; estimated starting and completion dates of the subcontract; and the geographical area in which the contract is to be performed.

3. **DEFINITIONS**, as used in these specifications:

   A. "Covered Area" means the geographical area described in the solicitation from which this contract resulted, El Paso County.

B. "Director" means Director, Office of Federal Contract Compliance Programs, United States Department of Labor, or any person to whom the Director delegates authority.

C. "Employer Identification Number" means the federal Social Security Number used on the employer's quarterly federal tax return, U.S. Treasury Department Form 941.

D. "Minority" includes:

(i) Black (all persons having origin in any of the Black African racial groups not of Hispanic origin);

(ii) Hispanic (all persons of Mexican, Puerto Rican, Cuban, Central or South American or other Spanish culture or origin, regardless of race);

(iii) Asian and Pacific Islander (all persons having origins in any of the original peoples of the Far East, Southeast Asia, the Indian Subcontinent, or the Pacific Islands); and

(iv) American Indian or Alaskan Native (all persons having origins in any of the original peoples of North America and maintaining identifiable tribal affiliations through membership and participation or community identification).

4. **CONTRACT DOCUMENTS:** Whenever the contractor, or any subcontractor at any tier, subcontracts a portion of the work involving any construction trade, it shall physically include in each subcontract in excess of $10,000 the provisions of these specifications and the notice which contains the applicable goals for minority and female participation and which is set forth in the solicitations from which this contract resulted.

5. **AFFIRMATIVE ACTION STEPS:** The Contractor shall implement and document the specific affirmative action standards provided in paragraphs 5a through 5p of these specifications. Contractor is expected to make substantially uniform progress toward its goal in each draft during the period specified.

a. Ensure and maintain a working environment free of harassment, intimidation, and coercion at all sites, and in all facilities at which the Contractor's employees are assigned to work. The Contractor shall specifically ensure that all foremen, superintendents, and other on-site supervisory personnel are aware of and carry out the Contractor's obligation to maintain such a working environment, with specific attention to minority or female individuals working at such sites or in such facilities.

b. Establish and maintain a current list of minority and female recruitment sources, provide written notification to minority and female recruitment sources and to community organizations when the contract or its unions have employment opportunities available, and maintain a record of the organization's responses.

c. Maintain a current file of the names, addresses and telephone numbers of each minority and female off-the-street applicant and minority or female referral from a union, a recruitment source or community organization and of what action was taken with respect to each such individual. If such individual was sent to the union hiring hall for referral and was not referred back to the contractor by the union or, if referred, not employed by the Contractor, this shall be documented in the file with the reason therefore, along with whatever additional actions the Contractor may have taken.

d. Provide immediate written notification to the Director when the union or unions with which the Contractor has a collective bargaining agreement has not referred to the Contractor a minority person or woman sent by the Contractor, or when the Contractor has other information that the union referral process has impeded the Contractor's efforts to meet its obligations.

e. Develop on-the-job training opportunities and/or participate in training programs for the area which expressly include minorities and women, including upgrading programs and apprenticeship and training programs relevant to the Contractor's employment needs, especially those programs funded or approved by the Department of Labor. The Contractor shall provide notice of these programs to the sources complied under 5b above.

f. Disseminate the Contractor's EEO Policy by providing notice of the policy to unions and training programs requesting their cooperation in assisting the Contractor in meeting it's EEO obligations; by including it in any policy manual and collective bargaining agreement; by publicizing it in the company newspaper, annual report, etc.; by specific review of the policy with all management personnel and with all minority and female employees at least once a year; and by posting the company EEO Policy on bulletin boards accessible to all employees at each location where construction work is performed.

g. Review, at least annually, the company's EEO Policy and Affirmative Action obligations under these specifications with all employees having responsibility for hiring, assignment, layoff, termination or other employment decisions including specific review of these items with on site supervisory personnel such as superintendents, general foremen, etc., prior to the initiation of construction work at any job site. A written record shall be made and maintained identifying the time and place of these

meetings, persons attending, subject matter discussed, and disposition of the subject matter.

h. Disseminate the Contractor's EEO Policy externally by including it in any advertising in the news media, specifically including minority and female news media, and providing written notification to and discussing the Contractor's EEO Policy with other Contractors and Subcontractors with whom the Contractor does or anticipates doing business.

i. Direct its recruitment efforts, both oral and written, to minority, female and community organizations, to schools with minority and female students and to minority female recruitment and training organizations serving the Contractor's recruitment area and employment needs. Not later than one month prior to the date for the acceptance of applications for apprenticeship or other training by any recruitment source, the Contractor shall send written notification to organizations such as the above, describing the openings, screening procedures, and tests to be used in the selection process.

j. Encourage present minority and female employees to recruit other minority persons and women and, where reasonable, provide after school, summer and vacation employment to minority and female youth both on the site and in other areas of a Contractor's work force.

k. Validate all tests and other selection requirements where there is an obligation to do so under 41 CFR Part 60-3.

l. Conduct, at least annually, an inventory and evaluation at least of all minority and female personnel for promotional opportunities and encourage these employees to seek or to prepare for, through appropriate training etc., such opportunities.

m. Ensure that seniority practices, job classifications, work assignments and other personnel practices do not have a discriminatory effect by continually monitoring all personnel and employment related activities to ensure that the EEO Policy and the Contractor's obligations under these specifications are being carried out.

n. Ensure that all facilities and company activities are non-segregated except that separate or single-user toilet and necessary changing facilities shall be provided to assure privacy between the sexes.

o. Document and maintain a record of all solicitations of offers for subcontractors from minority and female construction Contractors and suppliers, including circulation of solicitations to minority and female Contractor associations and other business associations.

p. Conduct a review, at least annually of all supervisors' adherence to and performance under the Contractor's EEO Policies and Affirmative Action obligations.

6. **UNION CONTRACT:** Neither the provisions of any collective bargaining agreement, nor the failure by a union with whom the Contractor has a collective bargaining agreement, to refer either the minorities or women shall excuse the Contractor's obligations under these specifications, Executive Order 11246, or the regulations promulgated pursuant thereto.

7. **TRAINEE, APPRENTICE COUNT:** In order for the nonworking training hours of apprentices and trainee to be counted in meeting the goals, such apprentices and trainees must be employed by the Contractor during the training period, and the Contractor must have made a commitment to employ the apprentices and trainees at the completion of their training, subject to the availability of employment opportunities. Trainees must be trained pursuant to training programs approved by the U.S. Department of Labor.

8. **JOINT EFFORTS:** Contractors are encouraged to participate in voluntary associations which assist in fulfilling one or more of their affirmation action obligations (3a through p). The efforts of a Contractor association joint contractor-union, contractor-community, or the similar group of which the Contractor is a member and participant, may be asserted as fulfilling any one or more of its obligations under 5a through p of these specifications provided that the Contractor actively participates in the group, makes effort to assure that the group has a positive impact on the employment of minorities and women in the industry, ensures that the concrete benefits of the program are reflected in the Contractor's minority and female workforce participation, makes a good faith effort to meet its individual goals and timetable and can provide access to documentation which demonstrates the effectiveness of actions taken on behalf of the Contractor.

   The obligation to comply, however, is the Contractor's and failure of such a group to fulfill an obligation shall not be a defense for the Contractor's noncompliance.

9. **DISPARATE HIRING:** A single goal for minorities and a separate goal for women have been established. The Contractor, however, is required to provide equal opportunity and take affirmative action for all minority groups, both male and female, and all women, both minority and non-minority. Consequently, the Contractor may be in violation of the Executive Order if a particular group is employed in a substantially disparate manner (for example, even though the Contractor has achieved it's goals for women generally, the Contractor may be in violation of the Executive Order if a specific minority group of women is underutilized).

10. **NON DISCRIMINATION:** The Contractor shall not use the goals and timetables of Affirmative Action Standards to discriminate against any person because of race, color, religion, sex, or national origin.

11. **SUBCONTRACTOR SANCTIONS:** The Contractor shall carry out such sanctions and penalties for violation of these specifications and of the Equal Opportunity Clause, including suspension, termination and cancellation of existing subcontracts as may be imposed or ordered pursuant to Executive Order 11246, as amended, and its implementing regulations, by the Office of Federal Contract Compliance Programs. Any Contractor who fails to carry out such sanctions and penalties shall be in violation of these specifications and Executive Order 11246, as amended.

12. **SANCTIONS:** If the Contractor fails to comply with the Executive Order, and implementing regulations of these specifications, the Owner may proceed in accordance with 41 CFR 60-4.8.

13. **RECORDS:** The Contractor shall designate a responsible official to monitor all employment related activity to ensure that the company EEO Policy is being carried out, to submit reports relating to the provisions hereof as may be required by the Government and to keep records. Records shall at least include for each employee: the name, address, telephone numbers, construction trade, union affiliation (if any), employee identification number (when assigned), social security number, race, sex, status (e.g., mechanic, apprentice, trainee, helper or laborer), dates of changes in status, hours worked per week in the indicated trade, rate of pay, and locations at which the work was performed.

    Records shall be maintained in an easy-to-read, retrievable form. However, to the degree that existing records satisfy this requirement, Contractors shall not be required to maintain separate records.

14. **OTHER AREAS:** Nothing herein provided shall be constructed as a limitation upon the application of other superseding laws which establish different standards of compliance.

"ANTI-KICKBACK ACT"

ATTACHMENT TO SUPPLEMENTAL CONDITIONS, PARAGRAPH SC-16

Prohibited Act Exacting Kickbacks From Public Works Employees:

Whoever, by force intimidation, or threat of procuring dismissal from employment, or by any other manner whatsoever induces any person employed in the construction, prosecution, completion or repair of any public building, public work, or building or work financed in whole or in part by loans or grants from the United States, to give up any part of the compensation to which he is entitled under his contract of employment, shall be fined not more than $5,000 or imprisoned not more than five years, or both, (18 U.S.C. Section 874).

Applicability:

All Federal or Federally assisted construction contracts of $2,000 or more, 29 C.F.R. Part 3, Section 3.3 (c), and to employees on such construction projects that have the classification of laborer or mechanic or lower, but not to immediate supervisors of such employees. [29 C.F.R. Part 3, Section 3.3 (a)].

Definitions for Enforcement of This Act:

a) The term ***"building"*** or ***"work"*** generally include construction activity as distinguished from manufacturing, furnishing of materials, or servicing and maintenance work. The terms include, without limitation, buildings, structures, and improvements of all types, such as bridges, dams, plants, highways, parkways, streets, subways, tunnels, sewers, mains, power lines, pumping stations, railways, airports, terminals, docks, piers, wharves, ways, lighthouses, bouys, jetties, breakwaters, levees, and canals; dredging, shoring, scaffolding, drilling, blasting, excavating, clearing, and landscaping. Unless conducted in connection with and at the site of such a building or work as is described in the foregoing sentence, the manufacture or furnishing of materials articles, supplies, or equipment (whether or not a Federal or State agency acquires title to such materials, articles, supplies, or equipment during the course of the manufacture or furnishing, or owns the materials from which they are manufactured or furnished) is not a "building" or "work" within the meaning of the regulation in this part.

(b) The terms ***"construction", "prosecution", "completion"***, or ***"repair"*** mean all types of work done on a particular building or work at the site thereof, including, without limitation, altering, remodeling, painting and decorating, the transporting of materials and supplies to or from the building or work by the employees of the construction Contractor or construction Subcontractor, and the manufacturing or furnishing of materials, articles, supplies, or equipment on the site of the building or work, by persons

employed at the site by the Contractor or Subcontractor.

(c) The terms ***"public building"*** or ***"public work"*** include building or work for whose construction, prosecution, completion, or repair, as defined above, a Federal Agency is a contracting party, regardless of whether title thereof is in a Federal Agency.

(d) The term ***"building or work financed in whole or in part by loans or grants from the United States"*** includes building or work for whose construction, prosecution, completion, or repair, as defined above, payment or part payment is made directly or indirectly from funds provided by loans or grants by a Federal Agency. The term does not include building or work for which Federal assistance is limited solely to loan guarantees or insurance.

(e) Every person paid by a Contractor or Subcontractor in any manner for his labor in the construction, prosecution, completion, or repair of a public building or public work or building or work financed in whole or in part by loans or grants from the United States is ***"employed"*** and receiving ***"wages"***, regardless of any contractual relationship alleged to exist between him and the real employer.

(f) The term ***"any affiliated person"*** includes a spouse, child, parent, or other close relative of the Contractor or Subcontractor; a partner or officer of the Contractor or Subcontractor; a corporation closely connected with the Contractor or Subcontractor as parent, subsidiary or otherwise, and an officer or agent of such corporation.

(g) The term ***"Federal Agency"*** means the United States, the District of Columbia, and all executive departments, independent establishments, administrative agencies, and instrumentalities of the United States and of the District of Columbia, including corporations, all or substantially all of the stock of which is beneficially owned by the United States, by the District of Columbia, or any of the foregoing departments establishments, agencies, and instrumentalities.

Permissible Ways to Pay Wages:

The payment of wages shall be by cash, negotiable instruments payable on demand, or the additional forms of compensation for which deductions are permissible under this part. **No other method of payment shall be recognized on work subject to the Copeland Act.** [29 C.F.R. Part 3, Section 3.10].

Weekly Wage Statement Required From Contractors and Subcontractors:

Each Contractor or Subcontractor engaged in the construction, prosecution, completion, or repair of any public building or public work, or building or work financed in whole or in part

by loans or grants from the United States, shall furnish each week a statement with respect to the wages paid each of its employees engaged on work covered by 29 C.F.R. Parts 3 and 5 during the preceding weekly payroll period.

This statement shall be executed by the Contractor or Subcontractor or by an authorized officer or employee of the Contractor or Subcontractor who supervises the payment of wages, and shall be on form WH 348, "Statement of Compliance", or on an identical form on the back of WH 347, "Payroll (For Contractors Optional Use)" or on any form with identical wording. (Sample copies of WH 347 and WH 348 may be obtained from the Government contracting or sponsoring agency, and copies of these forms may be purchased at the Government Printing Office). [29 C.F.R. Part 3, Section 3.3(b)].

This statement must be delivered or marked within seven (7) days "after the regular payment date of the payroll period" to the Construction Bidding Office, Engineering and Construction Management Department, of the City of El Paso, the agency contracting for the work. [29 C.F.R. Part 3, Section 3.4(a)].

Penalty For Falsifying Statement or Submitting False, Fictitious or Fraudulent Statements:

A Fine of not more than $10,000 or imprisonment of not more than five (5) years or both. (18 U.S.C. 1001).

Permissible Deductions:

The following payroll deductions may be made without application to or approval of the Secretary of Labor.

(a) Any deduction made in compliance with the requirements of Federal, State, or local law, such as Federal or State withholding income taxes and Federal Social Security taxes.

(b) Any deduction of sums previously paid to the employee as a bona fide prepayment of wages when such prepayment is made without discount or interest. A "bona fide prepayment of wages" is considered to have been made only in cash or its equivalent has been advanced to the person employed in such manner as to give him complete freedom of disposition of the advanced fund.

(c) Any deduction of amounts required by court process to be paid to another, unless the deduction is in favor of the Contractor, Subcontractor or any affiliated person, or when collusion or collaboration exists.

(d) Any deduction constituting a contribution on behalf of the person employed to funds established by the employer or representatives of employees, or

both, for the purpose of providing either from principal or income, or both, medical or hospital care, pensions or annuities on retirement, death benefits compensation for injuries, illness, accidents, sickness, or disability, or for insurance to provide any of the foregoing, or unemployment benefits, vacation pay, savings accounts, or similar payments for the benefit of employees, their families and dependents: Provided, however, that the following standards are met:

(1) The deduction is not otherwise prohibited by law;

(2) It is either:

(i) voluntarily consented to by the employee in writing and in advance of the periods in which the work is to be done and such consent is not a condition either for the obtaining of or for the continuation of employment, or

(ii) provided for in a bona fide collective bargaining agreement between the Contractor or Subcontractor and representatives of its employees;

(3) No profit or other benefit is otherwise obtained, directly or indirectly, by the Contractor or Subcontractor or any affiliated person in the form of commission, dividend, or otherwise; and

(4) The deductions shall serve the convenience and interest of the employee.

(e) Any deduction contributing toward the purchase of United States Defense Stamps and Bonds when voluntarily authorized by the employee.

(f) Any deduction requested by the employee to enable him to repay loans to or to purchase shares in credit unions organized and operated in accordance with Federal and State credit union statutes.

(g) Any deduction voluntarily authorized by the employee for the making of contributions to governmental or quasi-governmental agencies, such as the American Red Cross.

(h) Any deduction voluntarily authorized by the employee for the making of contributions to Community Chests, United Givers Funds, and similar charitable organizations.

(i) Any deductions to pay regular union initiation fees and membership dues, not including fines or special assessments: ***Provided, however***, that a collective bargaining agreement between the contractor or subcontractor and

representatives of its employees provides for such deductions and the deductions are not otherwise prohibited by law.

(j) Any deduction not more than for the "reasonable cost" of board, lodging, or other facilities meeting the requirements of section 3(m) of the Fair Labor Standards Act of 1938, as amended, and Part 531 of this title. When such deduction is made the additional records required under 516.25(a) of this title shall be kept. [29 C.F.R. Part 3, Section 3.5].

(k) Any deduction for the cost of safety equipment of nominal value purchased by the employee as his own property for his personal protection in his work, such as safety shoes, safety glasses, safety gloves, and hard hats, if such equipment is not required by law to be furnished by the employer, if such deduction is not violative of the Fair Labor Standards Act or prohibited by other law, if the cost on which the deduction is based does not exceed the actual cost to the employer where the equipment is purchased from him and does not include any direct or indirect monetary return to the employer where the equipment is purchased from a third person, and if the deduction is either

(1) Voluntarily consented to by the employee in writing and in advance of the period in which the work is to be done and such consent is not a condition either for the obtaining of employment or its continuance; or

(2) Provided for in a bona fide collective bargaining agreement between the contractor or subcontractor and representatives of its employees.

Deductions Requiring Department of Labor Approval:

Any Contractor or Subcontractor may apply to the Secretary of Labor for permission to make any deduction not permitted under 3.5 (above). The Secretary may grant permission whenever he finds that:

(a) The Contractor, Subcontractor, or any affiliated person does not make a profit or benefit directly or indirectly from the deduction either in the form of a commission, dividend, or otherwise;

(b) The deduction is not otherwise prohibited by law;

(c) The deduction is either

(1) voluntarily consented to by the employee in writing and in advance of the period in which the work is to be done and such consent is not a condition either for the obtaining of employment or its continuance, or

(2) provided for in a bona fide collective bargaining agreement between the Contractor or Subcontractor and representatives of its employees;

and

(d) The deduction serves the convenience and interest of the employee. [29 C.F.R., Part 3, Section 3.6]. Deductions not elsewhere provided by this part and which are not found to be permissible under 3.6 (above) are prohibited.

How To Get Extraordinary Deductions Approved by the Secretary of Labor:

Any application for the making of payroll deductions under 3.6 (above) shall comply with the requirements prescribed in the following paragraphs of this Section:

(a) The application shall be in writing and shall be addressed to the Secretary of Labor.

(b) The application need not identify the contract or contracts under which the work in question is to be performed. Permission will be given for deductions on all current and future contracts of the applicant for a period of 1 year. A renewal of permission to make such payroll deduction will be granted upon the submission of an application which makes reference to the original application, recites the date of the Secretary of Labor's approval of such deductions, states affirmatively that there is continued compliance with the standards set forth in the provisions of § 3.6, and specifies any conditions which have changed in regard to the payroll deductions.

(c) The application shall state affirmatively that there is compliance with the standards set forth in the provisions of 3.6. The affirmation shall be accompanied by a full statement of the facts indicating such compliance.

(d) The application shall include a description of the proposed deduction, the purpose to be served thereby, and the classes of laborers or mechanics from whose wages the proposed deduction would be made.

(e) The application shall state the name and business of any third person to whom any funds obtained from the proposed deductions are to be transmitted and the affiliation of such person, if any, with the applicant.

Required Retention of Records For Three (3) Years:

(a) Each Contractor or Subcontractor shall preserve his weekly records for a period of three years from date of completion of the contract. The payroll records shall set out accurately and completely the name and address of each laborer and mechanic, his correct classification, rate of pay, daily and weekly number of hours worked, deductions made, and actual wages paid. Such payroll records shall be made available at all times for inspection by the contracting officer or his authorized representative, and by authorized representatives of the Department of Labor.

Contractor Legally Bound To Comply:

All contracts made with respect to the construction, prosecution, completion, or repair of any public building or public work or building or work financed in whole or in part by loans or grants from the United States covered by the regulations in this part shall expressly bind the Contractor or Subcontractor to comply with such of the regulations in this part as may be applicable. In this regard, see 5.5(a) of [this subtitle]. Subtitle "A", Title 29, C.F.R., Part 3. (29 C.F.R. Part 3, Section 3.11).

Legal Authority:
These requirements are imposed by authority of the Copeland Act, 40 U.S.C. 176 c (Section 2 of the Act of June 13, 1934, as amended), and made applicable to Community Development Block Grant - funded projects by 24 C.F.R. Section 570.605, Labor Standards.

Further Information on How To Comply:

Further information on compliance procedures may be obtained from:

CITY OF EL PASO
ENGINEERING AND CONSTRUCTION MANAGEMENT DEPARTMENT
CONSTRUCTION BIDDING OFFICE
TWO CIVIC CENTER PLAZA - 4TH FLOOR
EL PASO, TX 79001-1196
Telephone No. (915) 541-4200/Fax (915) 541-4016

CITY OF EL PASO CITY ATTORNEY
TWO CIVIC CENTER PLAZA - 9TH FLOOR
EL PASO, TX 79901-1196
Telephone No. (915) 541-4550/Fax (915) 541-4710

NORTHGATE TRANSFER CENTER AND PARKING GARAGE

Solicitation No. 2016-748

City of El Paso
Purchasing and Strategic Sourcing Department
300 N. Campbell, 1st Floor
El Paso, Texas

VOLUME 3 OF 3

TECHNICAL SPECIFICATIONS

For

NORTHGATE TRANSFER CENTER AND PARKING GARAGE SOLICITATION No. 2016-748

Northgate Transfer Center

EL PASO, TEXAS

Construction Specifications
PROJECT MANUAL
Final Design / Submittal

PREPARED BY EXIGO ARCHITECTS

TABLE OF CONTENTS

NORTHGATE
TRANSFER CENTER
TECHNICAL SPECIFICATIONS

DIVISION 1 - GENERAL

01000 Summary of Work
01019 Contract Considerations
01020 TPDES Requirements
01021 Contractor TPDES Certificate
01022 TPEDS Pollution Prevention Plan Certificate
01028 Modification Requirements
01030 Option
01039 Coordination and Meetings
01045 Cutting and Patching
01050 Field Engineering
01090 Reference Standards
01120 Alteration Project Procedures
01300 Submittals
01400 Quality Control
01510 Temporary Utilities
01555 Construction Facilities
01560 Temporary Controls
01570 Traffic Regulation
01600 Material and Equipment
01700 Contract Closeout
01720 Project Record Documents

DIVISION 2 - SITE WORK

02065 Aggregates for Earthwork
02200 Site Clearing
02300 Earthwork
02310 Rough Grading
02315 Fill
02630 Storm Drainage
02720 Aggregates for Base Course
02740 Asphaltic Concrete Pavement
02750 Portland Cement Concrete Paving
02831 Chain Link Fences, Wrought Iron Fences and Gates

DIVISION 3 - CONCRETE

03163 Drilled Piers and Shafts
03300 Cast-in Place Concrete
03335 Colored Concrete
03381 Post-Tensioned Concrete
03450 Architectural Precast Concrete

DIVISION 4 - MASONRY

04230 Reinforced Concrete Masonry
04410 Rough Stone

DIVISION 5 - METALS

05120 Structural Steel Framing
05125 Architecturally Exposed Structure Steel
05210 Steel Joists
05310 Steel Deck
05400 Metal Stud Framing
05500 Metal Fabrications
05511 Metal Pan Stairs
05520 Handrails and Guardrails

DIVISION 6 - WOOD AND PLASTIC

06114 Wood Blocking
06410 Interior Architectural Millwork
06610 Glass Fiber Reinforced Panels

DIVISION 7 - THERMAL AND MOISTURE PROTECTION

07160 Bituminous Dampproofing
07213 Batt Insulation
07420 Solid Cladding System
07464 Fiber Cement Siding
07530 Single Ply Roofing
07620 Sheet Metal Flashing and Trim
07724 Roof Hatches
07841 Firestopping
07900 Joint Sealers

DIVISION 8 - DOORS AND WINDOWS

08100 Builder’s Hardware
08111 Standard Steel Doors
08112 Standard Steel Frames
08229 Sliding Automatic Entrances
08331 Overhead Coiling Doors
08410 Aluminum Storefronts
08413 Glazed Aluminum Curtain Walls
08800 Glazing

DIVISION 9 - FINISHES

09013 Ceramic Tiling
09220 Portland Cement Plaster
09260 Gypsum Board Systems
09510 Suspended Acoustical Ceilings
09544 Modular Metal Ceiling Systems
09685 Carpet Tile
09900 Painting
09980 Coating Systems for Exterior Masonry

DIVISION 10 - SPECIALTIES
10160 Toilet Compartments
10260 Stainless Steel Corner Guards
10264 Bullet Resistant Panels
10350 Flagpole
10419 Dimensional Letter Signage
10442 Metal Dimensional Letters and Cast Plaque
10522 Fire Extinguisher/Cabinets
10800 Bathroom Accessories
10813 Bird Control Devices
10900 Aluminum Screens, (Option 2)

DIVISION 11 - EQUIPMENT

11400 Food Service equipment (OFCI)

DIVISION 12 - FURNISHINGS

12313 Bicycle Racks
12366 Solid Surfacing Countertops
12413 Roller Window Shades
12500 Interior Public Seating
12930 Site Furnishings

DIVISION 13 - SPECIAL CONSTRUCTION

13000 Tensile Membrane Structures
13065 Bullet Resistant Glass

DIVISION 14 - CONVEYING SYSTEMS

14240 Hydraulic Elevators

DIVISION 15 - MECHANICAL

15000 Mechanical General Conditions
15180 Insulation for Mechanical Systems
15400 Plumbing
15800 Heating,Ventilating and Air Conditioning
15900 Test and Balance
15985 Building Automation System

DIVISION 26 - ELECTRICAL

260500 Common Work Results for Electrical
260503 Equipment Wiring Connections
260519 Low-Voltage Electrical Power Conductors and Cables
260533 Raceway and Boxes for Electrical Systems
260534 Outlet Junction and Pull Boxes
260923 Lighting Control Devices Occupancy Sensors
262213 Low-Voltage Distribution Transformers TP-1
262313 Disconnect Switches
262416 Panelboards

262726 Wiring Devices
265100 Interior Lighting
265600 Exterior Lighting
283100 Fire Detection and Alarm

DIVISION 32 – LANDSCAPE

321540 Decomposed Granite Surfacing
329111 Mulching
329113 Soil Preparation
329200 Turf and Grasses
329300 Plants

Appendix A

TELECOMMUNICATIONS DESIGN AND CONSTRUCTION STANDARDS FOR CITY OF EL PASO CONTRACTORS by City Oof El Paso

Appendix B

CUT SHEETS

Appendix C

SECTION 01000
SUMMARY

PART 1 GENERAL

1.1 SECTION INCLUDES

A. Contract description.

B. Work by Owner.

C. Owner supplied products.

D. Contractor's use of site.

E. Future work.

F. Work sequence.

G. Owner occupancy.

H. Specification Conventions.

1.2 CONTRACT DESCRIPTION

A. Related Documents, Drawings and general provisions of the Contract, including the General Supplementary Conditions and other Division I Specification Sections, and other owner supply documents apply to this Section.

Project Identification: Work of the Project includes to construct a new Sun Metro Transfer Center facility to be located between Diane Drive and Wren Avenue consisting of two buildings:

1. Transfer Center building and site with about 8,500 sq. ft., this facility will include Restrooms, Operators Day Room, Lobby, Public Meeting Room, Ticket Office, Security Office, Kitchen, Vending, Stair and Elevator. Site will accommodate 6 street bus stops and 2 street bus stops for Brio.

2. Retail and Parking Garage Building in 3 levels with about 13,000 sq. ft of retail and garage space for 188 +- cars

B. Perform Work of Contract under contract with Owner in accordance with Conditions of Contract.

1.3 WORK BY OWNER

A. Items noted NIC (Not in Contract), will be furnished and installed by Owner. The Contractor will be required to provide access to Owner at proper time to facilitate installation of these items and to provide electrical and plumbing infrastructure for the proper and full function of the item.

1.4 OWNER SUPPLIED PRODUCTS

A. Owner's Responsibilities:
1. Arrange for and deliver Owner-reviewed Shop Drawings, Product Data, and Samples, to Contractor.
2. Arrange for delivery to site.
3. On delivery, inspect products jointly with Contractor.
4. Submit claims for transportation damage and replace damaged, defective, or deficient items.
5. Arrange for manufacturers' warranties, inspections, and service.

B. Contractor's Responsibilities:
1. Review Owner-reviewed Shop Drawings, Product Data, and Samples.
2. Receive and unload products at site; inspect for completeness or damage jointly with Owner.
3. Handle and store products.
4. Repair or replace items damaged after receipt.

C. Products furnished to site and installed by Owner:
1. NA.

D. Items furnished by Owner for installation by Contractor:
1. NA.

1.5 CONTRACTOR'S USE OF SITE

A. Limit use of site and premises to allow:
1. Owner occupancy as necessary.
2. Work by Others and Work by Owner.
3. Use of site and premises by the public as coordinated by Owner.

1.6 FUTURE WORK

A. NA

1.7 WORK SEQUENCE

1.8 OWNER OCCUPANCY

1.9 SPECIFICATION CONVENTIONS

A. These specifications are written in imperative mood and streamlined form. This imperative language is directed to the Contractor, unless specifically noted otherwise. The words “shall be” are included by inference where a colon (:) is used within sentences or phrases.

END OF SECTION

SECTION 01019
CONTRACT CONSIDERATIONS

PART 1 GENERAL

1.1 SECTION INCLUDES

A. Allowances.
B. Schedule of values.
C. Application for payment.
D. Change procedures.
E. Defect Assesment

1.2 RELATED SECTIONS

A. General Conditions of the Contract; - Payments
B. Section 01028 - Modification Requirements.
C. Section 01030 - Alternatives.
D. Section 01600 - Material and Equipment: Product substitutions.

1.3 ALLOWANCES

A. NA

1.4 SCHEDULE OF VALUES

A. Submit a printed schedule on AIA Form G703 - Application and Certificate for Payment Continuation Sheet.
B. Submit Schedule of Values in duplicate within 10 days after established in Notice to Proceed.
C. Format: Utilize the Table of Contents of this Project Manual. Identify each line item with number and title of the major specification Section. Identify site mobilization.
D. Include in each line item, the amount of Allowances specified in this section. For unit cost Allowances, identify quantities taken from Contract Documents multiplied by the unit cost to achieve the total for the item.
E. Include within each line item, a direct proportional amount of Contractor's overhead and profit.
F. Revise schedule to list approved Change Orders, with each Application For Payment.

1.5 APPLICATIONS FOR PAYMENT

A. Refer to General Conditions of the Contract for Payment Procedures. Submit three copies of each application on[AIA Form G702 - Application and Certificate for Payment and AIA G703 - Continuation Sheet.
B. Content and Format: Utilize Schedule of Values for listing items in Application for Payment.
C. Payment Period: To be established by the owner.
D. Include forms and waivers as required by Owner.
E. Include an updated construction progress schedule.

1.6 CHANGE PROCEDURES

A. The owners representative will advise of minor changes in the Work not involving an adjustment to Contract Sum/Price or Contract Time as authorized by the general conditions of the contract.

B. The Architect/Engineer may issue a Proposal Request which includes a detailed description of a proposed change with supplementary or revised Drawings and specifications, a change in Contract Time for executing the change Contractor will prepare and submit an estimate within 10 days.
C. The Contractor may propose changes by submitting a request for change to the Architect/Engineer, describing the proposed change and its full effect on the Work. Include a statement describing the reason for the change, and the effect on the Contract Sum/Price and Contract Time with full documentation and a statement describing the effect on Work by separate or other Contractors. Document any requested substitutions in accordance with Section 01600.
D. Stipulated Sum/Price Change Order: Based on Proposal Request and Contractor's fixed price quotation
E. Change Order Forms: AIA G701
F. Execution of Change Orders: Project Manager will issue Change Orders for signatures of parties as provided in the Conditions of the Contract.

1.7 DEFECT ASSESSMENT

A. Replace the Work, or portions of the Work, not conforming to specified requirements.
B. If, in the opinion of the owners representative it is not practical to remove and replace the Work, the owner’s representative will direct an appropriate remedy or adjust payment.

PART 2 PRODUCTS

Not Used.

PART 3 EXECUTION

Not Used.

END OF SECTION

SECTION 01020
TPDES REQUIREMENTS

PART 1 GENERAL

1.1 SECTION INCLUDES

A. Documentation to be prepared and signed by Contractor before conducting construction operations, in accordance with the Texas Pollutant Discharge Elimination System (TPDES).

B. Implementation, maintenance inspection, and termination of storm water pollution prevention control measures including, but not limited to, erosion and sediment controls, storm water management plans, waste collection and disposal, off-site vehicle tracking, and other applicable practices shown on the drawings or specified elsewhere in the Contract.

1.2 DEFINITIONS

A. Commencement of Construction Activities: The exposure of soil resulting from activities such as clearing, grading, and excavating.

B. Large Construction Activity is defined as a project that:

1. Disturbs five acres or more, or

2. Disturbs less than five acres but is part of a large common plan of development that will disturb five acres or more of land.

C. Small Construction Activity is a project that:

1. Disturbs one or more acres but less than five acres, or

2. Disturbs less than one acre but is part of a larger common plan of development that will ultimately disturb one or more acres but less than five acres.

D. Operator is a person or persons who have day-to-day operation control of the construction activities which are necessary to ensure compliance with the SWP3 for the site.

PART 2 PRODUCTS – Not Used

PART 3 EXECUTION

3.1 STORM WATER POLLUTION PREVENTION PLAN (SWP3)

A. The Contractor shall have an SWP3 prepared by a professional engineer licensed in the state of Texas.

B. The SWP3 will be updated as needed during construction following TCEQ requirements by the contractor.

C. The SWP3 shall be submitted to TCEQ14 days after award of the contract. Any comments provided shall be addressed prior to commencing construction activities.

3.2 NOTICE OF INTENT For Large Construction Activity

A. The Contractor shall fill out, sign, and date the TCEQ Form 20022 (02/03) Notice of Intent for Storm Water Discharges Associated with Construction Activity under the TPDES Construction General Permit (TXR 150000), included at the end of this Section.

B. The Contractor shall submit a copy of the Notice of Intent (NOI) form, along with a signed check for $100.00, made out to the Texas Commission on Environmental Quality, and completed payment submittal form to the TCEQ. A copy of the package will be submitted to the Owner.

C. Submission of the NOI form by the Contractor to TCEQ is required a minimum of two days before Commencement of Construction Activities.

3.3 CONSTRUCTION SITE NOTICE FOR SMALL CONSTRUCTION ACTIVITY

A. Fill out, sign, and date the Construction Site Notice, included at the end of this Section.

B. Transmit the signed Construction Site Notice to the engineer at least seven days prior to Commencement of the Construction Activity.

3.4 CERTIFICATION REQUIREMENTS

A. Fill out Pollution Prevention Plan Certification Form to include the Operator's signature, name, title and organization.

B. Contractor and Subcontractors shall sign and date Contractor's / Subcontractor's Certification for TPDES Permitting included at the end of this Section including Contractor's name, address, and telephone number, and the names of persons or firms responsible for maintenance and inspection of erosion and sediment control measures. Use multiple copies as required to document full information. Include this certification with other Project certification forms.

C. Submit properly completed certification forms to the engineer for review before commencing construction.

D. Conduct inspections in accordance with TCEQ requirements. Ensure persons or firms responsible for maintenance and inspection of erosion and sediment control measure read, fill out, sign, and date the Erosion Control Contractor's Certification for Inspection and Maintenance. Use EPA's NPDES Construction Inspection Form included at the end of this Section.

3.5 RETENTION OF RECORDS

A. Keep a copy of this document and the SWP3 in a readily accessible location at the construction site from Commencement of Construction Activity until submission of the Notice of Termination (NOT) for Storm Water Discharges with the Construction Activity. Contractors with day-to-day operational control over SWP3 implementation shall have a copy of the SWP3 available at a central location, on-site, for the use of all operators and those identified as having responsibilities under the SWP3. Upon submission of the NOT, submit all required forms and a copy of the SWP3 with all revisions to the engineer.

3.6 REQUIRED NOTICES

A. Post the following notices from effective date of the SWP3 until date of final site stabilization as defined in the Construction General Permit:

1. Post the TPDES permit number for Large Construction Activity or a signed TCEQ Construction Site Notice for Small Activity. Signed copies of the Contractor's NOI must also be posted.

2. Post notices near the main entrance of a construction site in a prominent place for public viewing. Post name and telephone number of Contractor's local contact person, brief project description and location of SWP3.

   a. If posting near a main entrance is not feasible due to safety concerns coordinate posting of the notice with the engineer to conform to requirements of the Construction General Permit.

   b. If Project is a linear construction project (e.g.: road, utilities, etc), post notice in a publicly accessible location near active construction. Move notice as necessary.

3. Post a notice to equipment and vehicles operators, instructing them to stop, and clean tires of debris and mud before driving into traffic lanes. Post at each stabilized construction exit area.

4. Post a notice of waste disposal procedures in a readily visible location on site.

3.7 ON-SITE WASTE MATERIAL STORAGE

A. On site waste material storage shall be self-contained and shall satisfy appropriate local, state, and federal rules and regulations.

B. Prepare list of waste material to be stored on-site. Update list as necessary to include up-to-date information. Keep a copy of the updated list with the SWP3.

C. Prepare description of controls to reduce pollutants generated from on-site storage. Include storage practices necessary to minimize exposure of materials to storm water, and spill prevention and response measures consistent with best management practices. Keep a copy of the description with the SWP3.

3.8 NOTICE OF TERMINATION

A. Submit a Notice of Termination (NOT) to the TCEQ and the engineer ten (10) days after:

1. Final stabilization has been achieved on all portions of the site that are the responsibility of the Contractor; or

2. Another operator has assumed control over all areas of the site that have not been stabilized.

3. All silt fences and other temporary erosion controls have either been removed, scheduled to be removed as defined in the SWP3, or transferred to a new operator if the new operator has sought permit coverage.

END OF SECTION

CONTRACTOR'S CERTIFICATION

I certify under penalty of law that I understand the terms and conditions of the *Texas Pollutant Discharge Elimination System (TPDES) Construction General Permit Number TXR 150000, issued on March 5, 2003,* that authorizes the stormwater discharges associated with construction activities from the construction site identified as part of this certification.

Signed:_____ Date: _____

Name: _____ Title: _____

Company:_____

Address: _____

City, State, Zip Code:_____ Telephone: _____

Responsible for:_____

Signed:_____ Date: _____

Name: _____ Title: _____

Company:_____

Address: _____

City, State, Zip Code:_____ Telephone: _____

Responsible for:_____

Signed:_____ Date: _____

Name: _____ Title: _____

Company:_____

Address: _____

City, State, Zip Code:_____ Telephone: _____

Responsible for:_____

POLLUTION PREVENTION PLAN CERTIFICATION

This certifies that this Construction Stormwater Pollution Prevention Plan is up-to-date and that the update meets the specified requirements under the *Texas Pollutant Discharge Elimination System (TPDES) Construction General Permit Number TXR 150000, issued on March 5, 2003,* and that the information provided herein is true, correct and complete. This also certifies that the person whose signature appears below has the authority to commit the resources necessary to implement this plan.

I certify under penalty of law that this document and all attachments were prepared under my direction or supervision in accordance with a system designed to assure that qualified personnel properly gathered and evaluated the information submitted. Based on my inquiry of the person or persons who manage the system, or those persons directly responsible for gathering the information, the information submitted is, to the best of my knowledge and belief, true, accurate, and complete. I am aware that there are significant penalties for submitting false information, including the possibility of fine and imprisonment for knowing violations.

Signed:_____ Date: _____

Name: _____

Title: _____

Company:_____

Organization: _____

SECTION 01028
MODIFICATION REQUIREMENTS

PART 1 GENERAL

1.1 SECTION INCLUDES

A. Submittals.
B. Documentation of change in Contract Sum/Price and Contract Time.
C. Change procedures.
D. Correlation of Contractor submittals.

1.2 RELATED SECTIONS

A. General Conditions of The Contract
B. Section 01019 - Contract Considerations: Cash Allowances.
C. Section 01019 - Contract Considerations: Payment applications.
D. Section 01300 - Submittals: Work schedule.
E. Section 01600 - Material and Equipment: Product options and substitutions.
F. Section 01700 - Contract Closeout: Project record documents.

1.3 SUBMITTALS

A. Submit name of the individual authorized to receive change documents, and be responsible for informing others in Contractor's employ or Subcontractors of changes to the Work.

B. Change Order Forms: AIA G701 Change Order

1.4 DOCUMENTATION OF CHANGE IN CONTRACT SUM/PRICE AND CONTRACT TIME

A. Maintain detailed records of work done on a time and material basis. Provide full information required for evaluation of proposed changes, and to substantiate costs of changes in the Work.

B. Document each quotation for a change in cost or time with sufficient data to allow evaluation of the quotation.

C. Provide additional data to support computations:
1. Quantities of products, labor, and equipment.
2. Taxes, insurance, and bonds.
3. Overhead and profit.
4. Justification for any change in Contract Time.
5. Credit for deletions from Contract, similarly documented.

D. Support each claim for additional costs, and for work done on a time and material basis, with additional information:
1. Origin and date of claim.
2. Dates and times work was performed, and by whom.
3. Time records and wage rates paid.
4. Invoices and receipts for products, equipment, and subcontracts, similarly documented.

1.5 CHANGE PROCEDURES

A. The Architect/Engineer will advise of minor changes in the Work not involving an adjustment to Contract Sum/Price or Contract Time by issuing supplemental instructions.

B. Refer to paragraph 2.5 , CHANGE ORDERS AND CLAIMS FOR EXTRA WORK; of the General Conditions of the Contract for change order procedures and execution.

1.6 CORRELATION OF CONTRACTOR SUBMITTALS

A. Promptly revise Schedule of Values and Application for Payment forms to record each authorized Change Order as a separate line item and adjust the Contract Sum/Price.

B. Promptly revise progress schedules to reflect any change in Contract Time, revise sub-schedules to adjust times for other items of work affected by the change, and resubmit.

C. Promptly enter changes in Project Record Documents.

PART 2 PRODUCTS

Not Used.

PART 3 EXECUTION

Not Used.

END OF SECTION

SECTION 01030
OPTIONS

PART 1 GENERAL

1.1 SECTION INCLUDES

A. Optins submission to consider.

1.2 RELATED SECTIONS

A. Proposal Form: Options listed on bid proposal form
B. Instructions To Bidders: Requirements for Alternatives.
C. Section 01019 - Contract Considerations.
D. Section 01600 - Material and Equipment: Product options and substitutions.
E.

1.3 SUBMISSION REQUIREMENTS

A. Submit options identifying the effect on adjacent or related components.
B. Options quoted on Bid Forms will be reviewed and accepted or rejected at the Owner's option. Accepted options will be identified in the Owner-Contractor Agreement.
C. Coordinate related work and modify surrounding work to integrate the Work of each option.

1.4 SCHEDULE OF OPTIONS

A. **Option No. 1:** Construction Addition of Tensile Structures. “Section 13000 Tensile Membrane Structures”.

B. **Option No. 2:** Aluminim Decorative Screens: Aluminum exterior screens located on the west and south sides of the Garage and Retail building. Refer to OPTIONS SHEET AG1000 of the Construction Documents set.

C. **Option No. 3:** Exterior Tensile Shade Screen Structures. Rerfer to OPTIONS SHEET AG1000.

D. **Option No. 4:** Clock Spier. Refer to OPTIONS SHEET AG1000 of the Construction Documents set.

END OF SECTION

SECTION 01039
COORDINATION AND MEETINGS

PART 1 GENERAL

1.1 SECTION INCLUDES

A. Coordination and project conditions.
B. Preconstruction meeting.
C. Site mobilization meeting.
D. Progress meetings.
E. Preinstallation meetings.
F. Equipment electrical characteristics and components.
G. Examination.
H. Preparation.

1.2 RELATED SECTIONS

A. Section 01045 - Cutting and Patching.
B. Section 01050 - Field Engineering.
C. Section 01120 - Alteration Project Procedures.

1.3 COORDINATION AND PROJECT CONDITIONS

A. Coordinate scheduling, submittals, and Work of the various sections of the Project Manual to ensure efficient and orderly sequence of installation of interdependent construction elements , with provisions for accommodating items installed later.

B. Verify utility requirements and characteristics of operating equipment are compatible with building utilities. Coordinate work of various sections having interdependent responsibilities for installing, connecting to, and placing in service, such equipment.

C. Coordinate space requirements, supports, and installation of mechanical and electrical Work which are indicated diagrammatically on Drawings. Follow routing shown for pipes, ducts, and conduit, as closely as practicable; place runs parallel with lines of building. Utilize spaces efficiently to maximize accessibility for other installations, for maintenance, and for repairs.

D. In finished areas except as otherwise indicated, conceal pipes, ducts, and wiring within the construction. Coordinate locations of fixtures and outlets with finish elements.

E. Coordinate completion and clean-up of Work of separate sections in preparation for Substantial Completion and for portions of Work designated for Owner's occupancy.

F. After Owner occupancy of premises, coordinate access to site for correction of defective Work and Work not in accordance with Contract Documents, to minimize disruption of Owner's activities.

1.5 PRECONSTRUCTION MEETING

A. Owner will schedule a meeting prio to Notice of Award.
B. Attendance Required: Owner, Architect/Engineer, and Contractor.
C. Agenda:

1. Execution of Owner-Contractor Agreement.
2. Submission of executed bonds and insurance certificates.
3. Distribution of Contract Documents.
4. Submission of list of Subcontractors, list of Products, schedule of values, and progress schedule.
5. Designation of personnel representing the parties in Contract, and the Architect/Engineer.
6. Procedures and processing of field decisions, submittals, substitutions, applications for payments, proposal request, Change Orders, and Contract closeout procedures.
7. Scheduling.
8. Scheduling activities of a Geotechnical Engineer.
9. Use of premises by Owner and Contractor.
10. Owner's requirements and partial occupancy.
11. Construction facilities and controls provided by Owner.
12. Temporary utilities provided by Owner.
13. Survey and layout.
14. Security and housekeeping procedures.
15. Schedules.
16. Application for payment procedures.
17. Procedures for testing.
18. Procedures for maintaining record documents.
19. Requirements for start-up of equipment.
20. Inspection and acceptance of equipment put into service during construction period

D. Record minutes and distribute copies within two days after meeting to participants, with two copies to Architect/Engineer,Owner, participants, and those affected by decisions made.

1.6 PROGRESS MEETINGS

A. Schedule and administer meetings throughout progress of the Work at maximum weekly intervals.

B. The General Contractor will make arrangements for meetings, prepare agenda with copies for participants, preside at meetings.

C. Attendance Required: Job superintendent, major Subcontractors and suppliers, Owner, Architect/Engineer, as appropriate to agenda topics for each meeting.

D. Agenda:
1. Review minutes of previous meetings.
2. Review of Work progress.
3. Field observations, problems, and decisions.
4. Identification of problems which impede planned progress.
5. Review of submittals schedule and status of submittals.
6. Review of off-site fabrication and delivery schedules.
7. Maintenance of progress schedule.
8. Corrective measures to regain projected schedules.
9. Planned progress during succeeding work period.
10. Coordination of projected progress.
11. Maintenance of quality and work standards.
12. Effect of proposed changes on progress schedule and coordination.
13. Other business relating to Work.

E. Contractor to record minutes and distribute copies within two days after meeting to participants, with two copies to Architect/Engineer, Owner, participants, and those affected by decisions made.

1.7 PREINSTALLATION MEETING

A. When required in individual specification sections, convene a preinstallation meeting at the site prior to commencing work of the section.

B. Require attendance of parties directly affecting, or affected by, work of the specific section.

C. Notify Architect/Engineer four days in advance of meeting date.

D. Prepare agenda and preside at meeting:
1. Review conditions of installation, preparation and installation procedures.
2. Review coordination with related work.

E. Record minutes and distribute copies within two days after meeting to participants, with two copies toArchitect/Engineer, Owner, participants, and those affected by decisions made.

PART 2 PRODUCTS

2.1 EQUIPMENT ELECTRICAL CHARACTERISTICS AND COMPONENTS

A. Motors: Refer to Section 15170, NEMA MG1 Type. Specific motor type is specified in individual specification sections.

B. Wiring Terminations: Provide terminal lugs to match branch circuit conductor quantities, sizes, and materials indicated. Size terminal lugs to NFPA 70, include lugs for terminal box.

C. Cord and Plug: Provide minimum 6 foot (2 m) cord and plug including grounding connector for connection to electric wiring system. Cord of longer length is specified in individual specification sections.

PART 3 EXECUTION

NOT USED

END OF SECTION

SECTION 01045
CUTTING AND PATCHING

PART 1 GENERAL

1.1 SECTION INCLUDES

A. Requirements and limitations for cutting and patching of Work.

1.2 RELATED SECTIONS

A. General Conditions of the Contract:
B. Section 01010 - Summary of Work
C. Section 01120 - Alteration Project Procedures: Cutting and patching for alterations work.
D. Section 01300 - Submittals.
E. Section 01600 - Material and Equipment: Product options and substitutions.
F. Individual Product Specification Sections:
   1. Cutting and patching incidental to work of the section.
   2. Advance notification to other sections of openings required in work of those sections.
   3. Limitations on cutting structural members.

1.3 SUBMITTALS

A. Submit written request in advance of cutting or alteration which affects:
   1. Structural integrity of any element of Project.
   2. Integrity of weather exposed or moisture resistant element.
   3. Efficiency, maintenance, or safety of any operational element.
   4. Visual qualities of sight exposed elements.
   5. Work of Owner or separate Contractor.

B. Include in request:
   1. Identification of Project.
   2. Location and description of affected Work.
   3. Necessity for cutting or alteration.
   4. Description of proposed Work and Products to be used.
   5. Alternatives to cutting and patching.
   6. Effect on work of Owner or separate Contractor.
   7. Written permission of affected separate Contractor.
   8. Date and time work will be executed.

PART 2 PRODUCTS

2.1 MATERIALS

A. Primary Products: Those required for original installation.

B. Product Substitution: For any proposed change in materials, submit request for substitution described in Section 01600.

PART 3 EXECUTION

3.1 EXAMINATION

A. Examine existing conditions prior to commencing Work, including elements subject to damage or movement during cutting and patching.

B. After uncovering existing Work, assess conditions affecting performance of work.

C. Beginning of cutting or patching means acceptance of existing conditions.

3.2 PREPARATION

A. Provide temporary supports to ensure structural integrity of the Work. Provide devices and methods to protect other portions of Project from damage.

B. Provide protection from elements for areas which may be exposed by uncovering work.

C. Maintain excavations free of water.

D. Maintain access to adjacent properties.

3.3 CUTTING

A. Execute cutting and fitting including excavation and fill to complete the Work.

B. Uncover work to install improperly sequenced work.

C. Remove and replace defective or non-conforming work.

D. Remove samples of installed work for testing when requested.

E. Provide openings in the Work for penetration of mechanical and electrical work.

F. Employ skilled and experienced installer to perform cutting for weather exposed and moisture resistant elements, and sight exposed surfaces.

G. Cut rigid materials using masonry saw or core drill. Pneumatic tools not allowed without prior approval.

3.4 PATCHING

A. Execute patching to complement adjacent Work.

B. Fit Products together to integrate with other Work.

C. Execute work by methods to avoid damage to other Work, and which will provide appropriate surfaces to receive patching and finishing.

D. Employ original installer to perform patching for weather exposed and moisture resistant elements, and sight-exposed surfaces.

E. Restore work with new Products in accordance with requirements of Contract Documents.

F. Fit work air tight to pipes, sleeves, ducts, conduit, and other penetrations through surfaces.

G. At penetrations of fire rated walls, partitions, ceiling, or floor construction, completely seal voids with fire rated material in accordance with Section 07270, to full thickness of the penetrated element.

H. Refinish surfaces to match adjacent finish. For continuous surfaces, refinish to nearest intersection or natural break. For an assembly, refinish entire unit.

I. Coordinate operation and reinstallation of existing sprinkler systems, light fixtures, utilities, and mechanical systems in basements to be modified as noted.

END OF SECTION

SECTION 01050
FIELD ENGINEERING

PART 1 GENERAL

1.1 SECTION INCLUDES

A. Survey and field engineering.
B. Quality control.
C. Submittals.
D. Project record documents.

1.2 RELATED SECTIONS

A. Topographic and Boundry Survey included in Construction Documents.

B. General Conditions of the contract:
2.12 SURVEYS PERMITS AND REGULATIONS.
2.13 LAND RIGHT OF WAY

C. Section 01700 - Contract Closeout: Project Record Documents.

1.3 QUALITY ASSURANCE

A. Employ a Land Surveyor registered in the State of Texas and acceptable to Architect/Engineer, to perform survey work of this section.
B. Submit evidence of Surveyor's Errors and Omissions insurance coverage in the form of an Insurance Certificate.
C. Employ a Professional Engineer of the discipline required for specific service on Project, licensed in the State ofTexas.

1.4 SUBMITTALS FOR REVIEW

A. Submit name, address, and telephone number of Surveyor and Engineer before starting survey work.
B. On request, submit documentation verifying accuracy of survey work.
C. Submit a copy of site drawing and certificate signed by the Land Surveyor that the elevations and locations of the Work are in conformance with Contract Documents.

1.5 PROJECT RECORD DOCUMENTS

A. Maintain a complete and accurate log of control and survey work as it progresses.
B. On completion of foundation walls and major site improvements, prepare a certified survey illustrating dimensions, locations, angles, and elevations of construction and site work.
C. Submit Record Documents under provisions of Section 01700.

1.6 EXAMINATION

A. Verify locations of survey control points prior to starting work.
B. Promptly notify Architect/Engineer of any discrepancies discovered.

1.7 SURVEY REFERENCE POINTS

A. Contractor to locate and protect survey control and reference points.

B. Control datum for survey is that established by Owner provided survey which is indicated on Drawings.
C. Protect survey control points prior to starting site work; preserve permanent reference points during construction.
D. Promptly report to Architect/Engineer the loss or destruction of any reference point or relocation required because of changes in grades or other reasons.
E. Replace dislocated survey control points based on original survey control. Make no changes without prior written notice to Architect/Engineer.

1.8 SURVEY REQUIREMENTS

A. Provide field engineering services. Utilize recognized engineering survey practices.
B. Establish a minimum of two permanent bench marks on site, referenced to established control points. Record locations, with horizontal and vertical data, on project record documents.
C. Establish elevations, lines and levels. Locate and lay out by instrumentation and similar appropriate means:
    1. Site improvements including pavements; stakes for grading, fill and topsoil placement; utility locations, slopes, and invert elevations;.
    2. Grid or axis for structures.
    3. Building foundation, column locations, ground floor elevations, and basement locations.
D. Periodically verify layouts by same means.

PART 2 PRODUCTS

Not Used.

PART 3 EXECUTION

Not Used.

END OF SECTION

SECTION 01090
REFERENCE STANDARDS

PART 1 GENERAL

1.1 SECTION INCLUDES

A. Quality assurance.

1.2 NOT USED

1.3 QUALITY ASSURANCE

A. For Products or workmanship specified by association, trade, or other consensus standards, comply with requirements of the standard, except when more rigid requirements are specified or are required by applicable codes.
B. Conform to reference standard by date of issue current on date for receiving bids.
C. Obtain copies of standards when required by the Contract Documents.
D. Maintain copy at project site during submittals, planning, and progress of the specific work, until Substantial Completion.
E. Should specified reference standards conflict with Contract Documents, request clarification from the Architect/Engineer before proceeding.
F. Neither the contractual relationship, duties, and responsibilities of the parties in Contract nor those of the Architect/Engineer shall be altered by the Contract Documents by mention or inference otherwise in any reference document.

PART 2 PRODUCTS

Not Used.

PART 3 EXECUTION

Not Used.

END OF SECTION

SECTION 01120
ALTERATION PROJECT PROCEDURES

PART 1 GENERAL

1.1 SECTION INCLUDES

A. Products and installation for patching Work.
B. Transition and adjustments.
C. Repair of damaged surfaces, finishes, and cleaning.

1.2 RELATED SECTIONS

A. General Conditions of The Contract.
B Section 01039 - Coordination and Meetings: Work sequence, maintenance of utility services.
C. Section 01045 - Cutting and Patching: Cutting and patching.
D. Section 01510 - Construction Facilities and Temporary Controls: Temporary enclosures, protection of installed work, and cleaning during construction.

PART 2 PRODUCTS

2.1 PRODUCTS FOR PATCHING AND EXTENDING WORK

A. New Materials: As specified in product sections; match existing Products and work for patching work.
B. Type and Quality of Existing Products: Determine by inspecting and testing Products where necessary, referring to existing Work as a standard.

PART 3 EXECUTION

3.1 EXAMINATION

A. Verify that demolition is complete and areas are ready for installation of new Work.
B. Beginning of restoration Work means acceptance of existing conditions.

3.2 PREPARATION

A. Cut, move, or remove items as necessary for access to alterations and renovation Work. Replace and restore at completion.
B. Remove unsuitable material not marked for salvage, such as rotted wood, corroded metals, and deteriorated masonry and concrete. Replace materials as specified for finished Work.
C. Remove debris and abandoned items from area and from concealed spaces.
D. Prepare surface and remove surface finishes to provide for proper installation of new work and finishes.
E. Close openings in exterior surfaces to protect existing work from weather and extremes of temperature and humidity. Insulate duct work and piping to prevent condensation in exposed areas.

3.3 INSTALLATION

A. Coordinate work of alterations and renovations to expedite completion sequentially.

B. Remove, cut, and patch Work in a manner to minimize damage and to provide a means of restoring Products and finishes to original condition .
C. In addition to specified replacement of equipment and fixtures restore existing plumbing, heating, ventilation, air conditioning, electrical, and sprinkler systems to full operational condition.
D. Re-cover and refinish Work that exposes mechanical and electrical work exposed accidently during the work.
E. Install Products as specified in individual sections.

3.4 TRANSITIONS

A. Where new Work abuts or aligns with existing, perform a smooth and even transition. Patch Work to match existing adjacent Work in texture and appearance.
B. When finished surfaces are cut so that a smooth transition with new Work is not possible, terminate existing surface along a straight line at a natural line of division and make recommendation to Architect/Engineer.

3.5 ADJUSTMENTS

A. Where a change of plane of 1/4 inch or more occurs, request instructions from Architect/Engineer.

3.6 REPAIR OF DAMAGED SURFACES

A. Patch or replace portions of existing surfaces which are damaged, lifted, discolored, or showing other imperfections as a result of work specified
B. Repair substrate prior to patching finish.

3.7 FINISHES

A. Finish surfaces as specified in individual Product sections.
B. Finish patches to produce uniform finish and texture over entire area. When finish cannot be matched, refinish entire surface to nearest intersections.

END OF SECTION

SECTION 01300
SUBMITTALS

PART 1 GENERAL

1.1 SECTION INCLUDES

A. Submittal procedures.
B. Construction progress schedules.
C. Proposed Products list.
D. Product Data.
E. Shop Drawings.
F. Samples.
G. Design data.
H. Test reports.
I. Certificates.
J. Manufacturer's instructions.
K. Manufacturer's field reports.
L. Erection drawings.

1.2 RELATED SECTIONS

A. General Conditions of the Contract
B. Section 01400 - Quality Control: Manufacturers' field services and reports.
C. Section 01700 - Contract Closeout: Contract warranties, bonds, manufacturers' certificates, and closeout submittals.

1.3 REFERENCES

A. AGC (Associated General Contractors of America) publication "The Use of CPM in Construction - A Manual for General Contractors and the Construction Industry".

1.4 SUBMITTAL PROCEDURES

A. Transmit each submittal with Architect/Engineer accepted form. Discuss with owner, client and architect the possibility od submitting electronically and not in paper or both when needed.

B. Sequentially number the transmittal form. Revise submittals with original number and a sequential alphabetic suffix.

C. Identify Project, Contractor, Subcontractor or supplier; pertinent drawing and detail number, and specification section number, as appropriate.

D. Apply Contractor's stamp, signed or initialled certifying that review, approval, verification of Products required, field dimensions, adjacent construction Work, and coordination of information is in accordance with the requirements of the Work and Contract Documents.

E. Schedule submittals to expedite the Project, and deliver to Architect/Engineer at business address. Coordinate submission of related items.

F. For each submittal for review, allow 10 business days excluding delivery time to and from the Contractor.

G. Identify variations from Contract Documents and Product or system limitations which may be detrimental to successful performance of the completed Work.

H. Provide space for Contractor and Architect/Engineer review stamps.

I. When revised for resubmission, identify all changes made since previous submission.

J. Distribute copies of reviewed submittals as appropriate. Instruct parties to promptly report any inability to comply with requirements.

K. Submittals not requested will not be recognized or processed.

1.5 CONSTRUCTION PROGRESS SCHEDULES

A. Submit initial schedule in duplicate within 10 days after date established in Notice to Proceed.

B. Revise and resubmit as required.

C. Submit revised schedules with each Application for Payment, identifying changes since previous version.

D. Submit a computer generated horizontal bar chart with separate line for each major portion of Work or operation , identifying first work day of each week.

E. Show complete sequence of construction by activity, identifying Work of separate stages and other logically grouped activities. Indicate the early and late start, early and late finish, float dates, and duration.

F. Indicate estimated percentage of completion for each item of Work at each submission.

G. Indicate submittal dates required for shop drawings, product data, samples, and product delivery dates, including those furnished by Owner and required by Allowances.

1.6 PROPOSED PRODUCTS LIST

A. Within 10 days after date of Notice to Proceed, submit list of major products proposed for use, with name of manufacturer, trade name, and model number of each product.

B. For products specified only by reference standards, give manufacturer, trade name, model or catalog designation, and reference standards.

1.7 PRODUCT DATA

A. Product Data For Review:
   1. Submitted to Architect/Engineer for review for the limited purpose of checking for conformance with information given and the design concept expressed in the contract documents.
   2. After review, provide copies and distribute in accordance with SUBMITTAL PROCEDURES article above and for record documents purposes described in Section 01700 - CONTRACT CLOSEOUT.

B. Product Data For Information:

1. Submitted for the Architect/Engineer's knowledge as contract administrator or for the Owner.

C. Product Data For Project Close-out:
1. Submitted for the Owner's benefit during and after project completion.

D. Submit the number of copies which the Contractor requires, plus five copies which will be retained by the Architect/Engineer.

E. Mark each copy to identify applicable products, models, options, and other data. Supplement manufacturers' standard data to provide information specific to this Project.

F. Indicate Product utility and electrical characteristics, utility connection requirements, and location of utility outlets for service for functional equipment and appliances.

G. After review distribute in accordance with the Submittal Procedures article above and provide copies for record documents described in Section 01700 - CONTRACT CLOSEOUT.

1.8 SHOP DRAWINGS

A. Shop Drawings For Review:
1. Submitted to Architect/Engineer for review for the limited purpose of checking for conformance with information given and the design concept expressed in the contract documents.
2. After review, produce copies and distribute in accordance with SUBMITTAL PROCEDURES article above and for record documents purposes described in Section 01700 - CONTRACT CLOSEOUT.

B. Shop Drawings For Information:
1. Submitted for the Architect/Engineer's knowledge as contract administrator or for the Owner.

C. Shop Drawings For Project Close-out:
1. Submitted for the Owner's benefit during and after project completion.

D. Indicate special utility and electrical characteristics, utility connection requirements, and location of utility outlets for service for functional equipment and appliances.

E. Submit in the form of one reproducible transparency and two opaque reproductions.

1.9 SAMPLES

A. Samples For Review:
1. Submitted to Architect/Engineer for review for the limited purpose of checking for conformance with information given and the design concept expressed in the contract documents.
2. After review, produce duplicates and distribute in accordance with SUBMITTAL PROCEDURES article above and for record documents purposes described in Section 01700 - CONTRACT CLOSEOUT.

B. Samples For Information:
1. Submitted for the Architect/Engineer's knowledge as contract administrator or for the Owner.

C. Samples For Selection:
   1. Submitted to Architect/Engineer for aesthetic, color, or finish selection.
   2. Submit samples of finishes [from the full range of manufacturers' standard colors,] [in custom colors selected,] textures, and patterns for Architect/Engineer selection.
   3. After review, produce duplicates and distribute in accordance with SUBMITTAL PROCEDURES article above and for record documents purposes described in Section 01700 - CONTRACT CLOSEOUT.

D. Submit samples to illustrate functional and aesthetic characteristics of the Product, with integral parts and attachment devices. Coordinate sample submittals for interfacing work.

E. Include identification on each sample, with full Project information.

F. Submit the number of samples specified in individual specification sections; one of which will be retained by Architect/Engineer.

G. Reviewed samples which may be used in the Work are indicated in individual specification sections.

H. Samples will not be used for testing purposes unless specifically stated in the specification section.

1.10 DESIGN DATA

A. Submit for the Architect/Engineer's knowledge as contract administrator or for the Owner.

B. Submit for information for the limited purpose of assessing conformance with information given and the design concept expressed in the contract documents.

1.11 TEST REPORTS

A. Submit for the Architect/Engineer's knowledge as contract administrator or for the Owner.

B. Submit test reports for information for the limited purpose of assessing conformance with information given and the design concept expressed in the contract documents.

1.12 CERTIFICATES

A. When specified in individual specification sections, submit certification by the manufacturer, installation/application Subcontractor, or the Contractor to Architect/Engineer, in quantities specified for Product Data.

B. Indicate material or Product conforms to or exceeds specified requirements. Submit supporting reference data, affidavits, and certifications as appropriate.

C. Certificates may be recent or previous test results on material or Product, but must be acceptable to Architect/Engineer.

1.13 MANUFACTURER'S INSTRUCTIONS

A. When specified in individual specification sections, submit printed instructions for delivery, storage, assembly, installation, [start-up,] adjusting, and finishing, to Architect/Engineer for delivery to Owner in quantities specified for Product Data.

B. Indicate special procedures, perimeter conditions requiring special attention, and special environmental criteria required for application or installation.

C. Refer to Section 01400 - Quality Control, Manufacturers' Field Services article.

1.14 MANUFACTURER'S FIELD REPORTS

A. Submit reports for the Architect/Engineer's benefit as contract administrator or for the Owner.

B. Submit report in duplicate within 30 days of observation to Architect/Engineer for information.

C. Submit for information for the limited purpose of assessing conformance with information given and the design concept expressed in the contract documents.

1.15 ERECTION DRAWINGS

A. Submit drawings for the Architect/Engineer's benefit as contract administrator or for the Owner.

B. Submit for information for the limited purpose of assessing conformance with information given and the design concept expressed in the contract documents.

C. Data indicating inappropriate or unacceptable Work may be subject to action by the Architect/Engineer or Owner.

PART 2 PRODUCTS

Not Used.

PART 3 EXECUTION

Not Used.

END OF SECTION

SECTION 01400
QUALITY CONTROL

PART 1 GENERAL

1.1 SECTION INCLUDES

A. Quality assurance - control of installation.
B. Tolerances
D. Mock-up.
E. Inspecting and testing laboratory services.
F. Manufacturers' field services.

1.2 RELATED SECTIONS

A. Section 01090 - Reference Standards.
B. Section 01300 - Submittals: Submission of manufacturers' instructions and certificates.
C. Uniform General Conditions of the Contract.
D. Section 01600 - Material and Equipment: Requirements for material and product quality.

1.3 QUALITY ASSURANCE - CONTROL OF INSTALLATION

A. Monitor quality control over suppliers, manufacturers, Products, services, site conditions, and workmanship, to produce Work of specified quality.

B. Comply with manufacturers' instructions, including each step in sequence.

C. Should manufacturers' instructions conflict with Contract Documents, request clarification from Architect/Engineer before proceeding.

D. Comply with specified standards as minimum quality for the Work except where more stringent tolerances, codes, or specified requirements indicate higher standards or more precise workmanship.

E. Perform Work by persons qualified to produce required and specified quality.

F. Verify that field measurements are as indicated on shop drawings or as instructed by the manufacturer.

G. Secure Products in place with positive anchorage devices designed and sized to withstand stresses, vibration, physical distortion, or disfigurement.

1.4 TOLERANCES

A. Monitor fabrication and installation tolerance control of Products to produce acceptable Work. Do not permit tolerances to accumulate.

B. Comply with manufacturers' tolerances. Should manufacturers' tolerances conflict with Contract Documents, request clarification from Architect/Engineer before proceeding.

C. Adjust Products to appropriate dimensions; position before securing Products in place.

1.6 MOCK-UP

A. Tests will be performed under provisions identified in this section and identified in the respective product specification sections.

B. Assemble and erect specified items with specified attachment and anchorage devices, flashings, seals, and finishes.

C. Accepted mock-ups shall be a comparison standard for the remaining Work.

D. Where mock-up has been accepted by Architect/Engineer and is specified in product specification sections to be removed; remove mock-up and clear area when directed to do so.

1.7 TESTING SERVICES

A. Owner will appoint, employ, and pay for specified services of an independent firm to perform testing.

B. Refer to General Conditions of the Contract; paragraph 4.4 INSPECTION AND TESTING MATERIALS

1.8 INSPECTION SERVICES

A. Refer to The General Conditions of the Contract, Section 3.0 - CONTROL OF THE WORK.

1.9 MANUFACTURERS' FIELD SERVICES

A. When specified in individual specification sections, require material or Product suppliers or manufacturers to provide qualified staff personnel to observe site conditions, conditions of surfaces and installation, quality of workmanship, start-up of equipment, test, adjust and balance of equipment as applicable, and to initiate instructions when necessary.

B. Submit qualifications of observer to Architect/Engineer 30 days in advance of required observations.

C. Report observations and site decisions or instructions given to applicators or installers that are supplemental or contrary to manufacturers' written instructions.

D. Refer to Section 01300 - SUBMITTALS, MANUFACTURERS' FIELD REPORTS article.

PART 2 PRODUCTS

Not Used.

PART 3 EXECUTION

3.1 EXAMINATION

A. Verify that existing site conditions and substrate surfaces are acceptable for subsequent Work. Beginning new Work means acceptance of existing conditions.

B. Verify that existing substrate is capable of structural support or attachment of new Work being applied or attached.

C. Examine and verify specific conditions described in individual specification sections.

D. Verify that utility services are available, of the correct characteristics, and in the correct locations.

3.2 PREPARATION

A. Clean substrate surfaces prior to applying next material or substance.

B. Seal cracks or openings of substrate prior to applying next material or substance.

C. Apply manufacturer required or recommended substrate primer, sealer, or conditioner prior to applying any new material or substance in contact or bond.

END OF SECTION

SECTION 01510
TEMPORARY UTILITIES

PART 1 GENERAL

1.1 SECTION INCLUDES

A. Temporary Utilities: Electricity, lighting, ventilation, telephone service, water, and sanitary facilities.

1.2 RELATED SECTIONS

A. Section 01555 - Construction Facilities.

B. Section 01560 - Temporary Controls.

C. Section 01570 - Traffic Regulation.

D. General Conditions of the Contract.

E. Section 01700 - Contract Closeout: Final cleaning.

1.3 TEMPORARY ELECTRICITY

A. Refer to General Conditions of the Contract; paragraph 5.20 OBLIGATION FO TEMPORARY ELECTRICAL POWER.

1.4 TEMPORARY LIGHTING FOR CONSTRUCTION PURPOSES

A. Provide and maintain lighting for construction operations to achieve a minimum lighting level of 2 watt/sq ft.

B. Provide and maintain 1 watt/sq ft lighting to exterior staging and storage areas after dark for security purposes.

C. Provide and maintain0.25 watt/sq ft H.I.D. lighting to interior work areas after dark for security purposes.

D. Provide branch wiring from power source to distribution boxes with lighting conductors, pigtails, and lamps as required.

E. Maintain lighting and provide routine repairs.

F. Permanent building lighting may [not] be utilized during construction.

1.7 TEMPORARY VENTILATION

A. Ventilate enclosed areas to assist cure of materials, to dissipate humidity, and to prevent accumulation of dust, fumes, vapors, or gases.

B. Utilize existing ventilation equipment. Extend and supplement equipment with temporary fan units as required to maintain clean air for construction operations.

1.8 TELEPHONE SERVICE

A. Provide, maintain, and pay for telephone service to field office at time of project mobilization.

1.9 FACSIMILE SERVICE

A. Provide, maintain and pay for facsimile service and a dedicated telephone line to field office at time of project mobilization.

1.10 TEMPORARY WATER SERVICE

A. Provide, maintain and pay for suitable quality water service required for construction operations at time of project mobilization.

B. Contractor will pay cost of water used. Exercise measures to conserve water.

C. Extend branch piping with outlets located so water is available by hoses with threaded connections. Provide temporary pipe insulation to prevent freezing.

1.11 TEMPORARY SANITARY FACILITIES

A. Provide and maintain required facilities and enclosures. Existing facility use is not permitted. Provide at time of project mobilization.

PART 2 PRODUCTS

Not Used.

PART 3 EXECUTION

Not Used.

END OF SECTION

SECTION 01555
CONSTRUCTION FACILITIES

PART 1 GENERAL

1.1 SECTION INCLUDES

A. Construction Facilities: Access roads, parking, progress cleaning, project signage

1.2 RELATED SECTIONS

A. General Conditions of the Contract

B. Section 01510 - Temporary Utilities.

C. Section 01560 - Temporary Controls.

D. Section 01570 - Traffic Regulation

E. Section 01700 - Contract Closeout: Final cleaning.

1.3 ACCESS ROADS

A. Construct and maintain temporary roads accessing public thoroughfares to serve construction area.

B. Extend and relocate as Work progress requires. Provide detours necessary for unimpeded traffic flow.

C. Provide and maintain access to fire hydrants, free of obstructions.

D. Provide means of removing mud from vehicle wheels before entering streets.

1.4 PARKING

A. Arrange for surface parking areas to accommodate construction personnel.

B. When site space is not adequate, provide additional off-site parking.

C. Do not allow vehicle parking on existing pavement.

1.5 PROGRESS CLEANING AND WASTE REMOVAL

A. Maintain areas free of waste materials, debris, and rubbish. Maintain site in a clean and orderly condition.

B. Remove debris and rubbish from pipe chases, plenums, attics, crawl spaces, and other closed or remote spaces, prior to enclosing the space.

C. Broom and vacuum clean interior areas prior to start of surface finishing, and continue cleaning to eliminate dust.

D. Collect and remove waste materials, debris, and rubbish from site periodically and dispose off-site.

E. Open free-fall chutes are not permitted. Terminate closed chutes into appropriate containers with lids.

1.6 PROJECT IDENTIFICATION

A. Provide (2) 8 feet wide x 6 feet high project sign of exterior grade plywood and wood frame construction, construct and support sign to withstand wind loads, with vinyl adhesive printed graphic, content to be provided electronically by architect.

B. List title of Project, names of Owner, Architect/Engineer, professional sub-consultants, Contractor, and major Subcontractors, by architect..

C. Erect on site at location indicated.

D. No other signs are allowed except those required by law.

1.7 FIELD OFFICES AND SHEDS

A. Office: Weather tight, with lighting, electrical outlets, heating, cooling and ventilating equipment, and equipped with sturdy furniture drawing rack, and drawing display table.

B. Provide space for Project meetings, with table and chairs to accommodate 12 Persons minimum.

D. Locate offices and sheds as approved by owner.

1.8 REMOVAL OF UTILITIES, FACILITIES, AND CONTROLS

A. Remove temporary utilities, equipment, facilities, materials, prior to Final Application for Payment inspection.

B. Remove underground installations to a minimum depth of 2'.

C. Clean and repair damage caused by installation or use of temporary work.

D. Restore existing and permanent facilities used during construction to original condition. Restore permanent facilities used during construction to specified condition.

PART 2 PRODUCTS

Not Used.

PART 3 EXECUTION

Not Used.

END OF SECTION

SECTION 01560
TEMPORARY CONTROLS

PART 1 - GENERAL

1.1 SECTION INCLUDES

A. Temporary Controls: Barriers and fencing, protection of the Work, water control, dust control, erosion and sediment control, noise control, and pollution control.

1.2 RELATED SECTIONS

A. General Conditions.

B. Section 01039 – Coordination and Meetings.

1.3 BARRIERS

A. Provide barriers to prevent unauthorized entry to construction areas and to protect existing facilities and adjacent properties from damage from construction operations and demolition.

B. Provide barricades and covered walkways required by governing authorities for public rights-of-way.

C. Provide protection for plant life designated to remain. Replace damaged plant life.

D. Protect non-owned vehicular traffic, stored materials, site, and structures from damage.

1.4 SECURITY

A. Coordinate with Owner's security program.

1.5 DUST CONTROL

A. The control of dust shall mean that no construction activity shall take place without applying all such reasonable measures as may be required to prevent particulate matter from becoming airborne so that it remains visible beyond the limits of construction. Reasonable measures may include paving, frequent road cleaning, planting vegetative groundcover, application of water or application of chemical dust suppressants.

B. Utilize methods and practices of construction to eliminate dust in full observance of agency regulations.

C. The Owner will determine the effectiveness of the dust control program and may request the Contractor to provide additional measures, at no additional cost to Owner.

D. Water used for control of dust shall be provided by the contractor.

1.4 EROSION AND SEDIMENT CONTROL

A. Plan and execute construction by methods to control surface drainage from cuts and fills. Prevent erosion and sedimentation.

B. Minimize amount of bare soil exposed at one time.

C. Provide temporary measures such as berms, dikes, and drains, to prevent water flow.

D. Periodically inspect earthwork to detect evidence of erosion and sedimentation; promptly apply

corrective measures.

1.9 NOISE CONTROL

A. Provide methods, means, and facilities to minimize noise from produced by construction operations.

1.11 POLLUTION CONTROL

A. Provide methods, means, and facilities to prevent contamination of soil, water, and atmosphere from discharge of noxious, toxic substances, and pollutants produced by construction operations.

B. The control of environmental pollution requires consideration of air, water, land, and involves management of noise and solid waste, as well as other pollutants.

C. During the life of this Contract, maintain all facilities constructed for pollution control as long as the operations creating the particular pollutant are being carried out or until the material concerned has become stabilized to the extent that pollution is no longer being created.

END OF SECTION

SECTION 01570
TRAFFIC REGULATION

PART 1 GENERAL

1.1 SECTION INCLUDES

A. Construction parking controls.
B. Flag persons.
C. Flares and lights.
D. Haul routes.
E. Traffic signs and signals.
F. Removal.

1.2 RELATED SECTIONS

A. Section 01000 - Summary of Work
B. Section 01039 - Coordination and Meetings: Project coordination.
C. General Conditions of the Contract; MAINTINANCE AND PROTECTION OF TRAFFIC.

PART 2 PRODUCTS

2.1 SIGNS, SIGNALS, AND DEVICES

A. Post Mounted and Wall Mounted Traffic Control and Informational Signs as indicated on the traffic control plans.
B. Traffic Control Signals: As approved by local jurisdictions.
C. Traffic Cones and Drums, Flares and Lights: As approved by local jurisdictions.
D. Flagperson Equipment: As required by local jurisdictions.
E. Coordinate traffic control with construction phasing plan as indicated on the traffic control plans.

PART 3 EXECUTION

3.1 CONSTRUCTION PARKING CONTROL

A. Control vehicular parking to prevent interference with public traffic and parking, access by emergency vehicles, and Owner's operations.
B. Monitor parking of construction personnel's vehicles. Maintain vehicular access to and through parking areas.
C. Prevent parking on or adjacent to access roads or in non- designated areas.

3.2 FLAG PERSONS

A. Provide trained and equipped flag persons to regulate traffic when construction operations or traffic encroach on public traffic lanes.

3.3 FLARES AND LIGHTS

A. Use flares and lights during hours of low visibility to delineate traffic lanes and to guide traffic.

3.4 HAUL ROUTES

A. Consult with authority having jurisdiction, establish public thoroughfares to be used for haul routes and site access.
B. Confine construction traffic to designated haul routes.

C. Provide traffic control at critical areas of haul routes to regulate traffic, to minimize interference with public traffic.

3.5 TRAFFIC SIGNS AND SIGNALS

A. At approaches to site and on site, install at crossroads, detours, parking areas, and elsewhere as needed to direct construction and affected public traffic.
B. Install and operate traffic control signals to direct and maintain orderly flow of traffic in areas under Contractor's control, and areas affected by Contractor's operations.
C. Relocate as Work progresses, to maintain effective traffic control.

3.6 REMOVAL

A. Remove equipment and devices when no longer required
B. Repair damage caused by installation.
C. Remove post settings to a depth of 2 feet

END OF SECTION

SECTION 01600
MATERIAL AND EQUIPMENT

PART 1 GENERAL

1.1 SECTION INCLUDES
- A. Products.
- B. Transportation and handling.
- C. Storage and protection.
- D. Product options.
- E. Substitutions.

1.2 RELATED SECTIONS
- A. General Conditions of the Contract
- B. Section 01400 - Quality Control: Product quality monitoring.

1.3 PRODUCTS

A. Do not use materials and equipment removed from existing premises, except as specifically permitted by the Contract Documents.

B. Provide interchangeable components of the same manufacture for components being replaced.

1.4 TRANSPORTATION AND HANDLING

A. Transport and handle Products in accordance with manufacturer's instructions.

B. Promptly inspect shipments to ensure that Products comply with requirements, quantities are correct, and Products are undamaged.

C. Provide equipment and personnel to handle Products by methods to prevent soiling, disfigurement, or damage.

1.5 STORAGE AND PROTECTION

A. Store and protect Products in accordance with manufacturers' instructions.

B. Store with seals and labels intact and legible.

C. Store sensitive Products in weather tight, climate controlled, enclosures in an environment favorable to Product.

D. For exterior storage of fabricated Products, place on sloped supports above ground.

E. Provide bonded off-site storage and protection when site does not permit on-site storage or protection.

F. Cover Products subject to deterioration with impervious sheet covering. Provide ventilation to prevent condensation and degradation of Products.

G. Store loose granular materials on solid flat surfaces in a well-drained area. Prevent mixing with foreign matter.

H. Provide equipment and personnel to store Products by methods to prevent soiling, disfigurement, or damage.

I. Arrange storage of Products to permit access for inspection. Periodically inspect to verify Products are undamaged and are maintained in acceptable condition.

1.6 PRODUCT OPTIONS

A. Products Specified by Reference Standards or by Description Only: Any Product meeting those standards or description.

B. Products Specified by Naming One or More Manufacturers: Products of manufacturers named and meeting specifications. Options allowed as listed in paragraph 4.3 of the General Conditions. " Or Equal Clause". Submit a request for substitution for any manufacturer not named in accordance with the following article.

1.7 SUBSTITUTIONS

A. Architect/Engineer will consider requests for Substitutions as explained in the "or Equal " clause of the General Conditions.

B. Substitutions may be considered when a Product becomes unavailable through no fault of the Contractor.

C. Document each request with complete data substantiating compliance of proposed Substitution with Contract Documents.

D. A request constitutes a representation that the Bidder
   1. Has investigated proposed Product and determined that it meets or exceeds the quality level of the specified Product.
   2. Will provide the same warranty for the Substitution as for the specified Product.
   3. Will coordinate installation and make changes to other Work which may be required for the Work to be complete with no additional cost to Owner.
   4. Waives claims for additional costs or time extension which may subsequently become apparent.
   5. Will reimburse Owner and Architect/Engineer for review or redesign services associated with re-approval by authorities.

E. Substitutions will not be considered when they are indicated or implied on shop drawing or product data submittals, without separate written request, or when acceptance will require revision to the Contract Documents.

F. Substitution Submittal Procedure:
   1. Submit three copies of request for Substitution for consideration. Limit each request to one proposed Substitution.
   2. Submit shop drawings, product data, and certified test results attesting to the proposed Product equivalence. Burden of proof is on proposer.
   3. The Architect/Engineer will notify Contractor in writing of decision to accept or reject request.

PART 2 PRODUCTS

Not Used.

PART 3 EXECUTION

Not Used.

END OF SECTION

SECTION 01700
CONTRACT CLOSEOUT

PART 1 GENERAL

1.1 SECTION INCLUDES
- A. Closeout procedures.
- B. Final cleaning.
- C. Adjusting.
- D. Project record documents.
- E. Operation and maintenance data.
- F. Spare parts and maintenance Products.
- G. Warranties and bonds.
- H. Maintenance service.

1.2 RELATED SECTIONS
- A. General Conditions of the Contract.

1.3 CLOSEOUT PROCEDURES

A. Submit written certification that Contract Documents have been reviewed, Work has been inspected, and that Work is complete in accordance with Contract Documents and ready for Architect/Engineer's review.

B. Provide submittals to Architect/Engineer that are required by governing or other authorities.

C. Submit final Application for Payment identifying total adjusted Contract Sum, previous payments, and sum remaining due.

D. Owner will occupy all of the project area as specified in Section 01010.

1.4 FINAL CLEANING

A. Execute final cleaning prior to final project assessment. Refer to parapgraph 2.11 of the General Conditions of the Contract.

B. Clean interior and exterior glass, surfaces exposed to view; remove temporary labels, stains and foreign substances, polish transparent and glossy surfaces, . Clean exterior glass of adjacent properties.

C. Clean equipment and fixtures to a sanitary condition with cleaning materials appropriate to the surface and material being cleaned.

E. Clean debris from roofs, gutters, downspouts, and drainage systems in the project scope.

F. Clean site; sweep paved areas, rake clean landscaped surfaces.

G. Remove waste and surplus materials, rubbish, and construction facilities from the site.

1.5 ADJUSTING

A. Adjust operating Products and equipment to ensure smooth and unhindered operation.

1.6 OPERATION AND MAINTENANCE DATA

A. Submit data bound in 8-1/2 x 11 inch (A4) text pages, three D side ring binders and one electronic file in PDF format.

B. Prepare binder cover with printed title "OPERATION AND MAINTENANCE INSTRUCTIONS", title of project, and subject matter of binder when multiple binders are required.

C. Internally subdivide the binder contents with permanent page dividers, logically organized as described below; with tab titling clearly printed under reinforced laminated plastic tabs.

D. Contents: Prepare a Table of Contents for each volume, with each Product or system description identified as follows:
   1. Part 1: Directory, listing names, addresses, and telephone numbers of Architect/Engineer, Contractor, Subcontractors, and major equipment suppliers.
   2. Part 2: Operation and maintenance instructions, arranged by system and subdivided by specification section. For each category, identify names, addresses, and telephone numbers of Subcontractors and suppliers. Identify the following:
      a. Significant design criteria.
      b. List of equipment.
      c. Parts list for each component.
      d. Operating instructions.
      e. Maintenance instructions for equipment and systems.
      f. Maintenance instructions for [special] finishes, including recommended cleaning methods and materials, and special precautions identifying detrimental agents.
   3. Part 3: Project documents and certificates, including the following:
      a. Shop drawings and product data.
      b. Air and water balance reports.
      c. Certificates.
      d. Photocopies of warranties.

E. Submit 1 draft copy of completed volumes prior to final inspection. This copy will be reviewed and returned after final inspection, with Architect/Engineer comments. Revise content of all document sets as required prior to final submission.

F. Submit two sets of revised final volumes, within 10days after final inspection.

G. Submit one electronic file: scan all documents of revised final binder. Submit this file either on a CD, DVD or memory stick.

1.7 SPARE PARTS AND MAINTENANCE PRODUCTS

A. Provide spare parts, maintenance, and extra Products in quantities specified in individual specification sections.

B. Deliver to Project site and place in location as directed; obtain receipt prior to final payment.

1.8 WARRANTIES AND BONDS

A. Provide duplicate notarized copies.

B. Execute and assemble transferable warranty documents from Subcontractors, suppliers, and manufacturers.

C. Provide Table of Contents and assemble in three D side ring binder with durable cover.

D. Submit prior to final Application for Payment.

E. For items of Work delayed beyond date of Substantial Completion, provide updated submittal within 10 days after acceptance, listing date of acceptance as start of warranty period.

1.9 MAINTENANCE SERVICE

A. Furnish service and maintenance of components indicated in specification sections during the warranty period

B. Examine system components at a frequency consistent with reliable operation. Clean, adjust, and lubricate as required.

C. Include systematic examination, adjustment, and lubrication of components. Repair or replace parts whenever required. Use parts produced by the manufacturer of the original component.

D. Maintenance service shall not be assigned or transferred to any agent or Subcontractor without prior written consent of the Owner.

PART 2 PRODUCTS

Not Used.

PART 3 EXECUTION

Not Used.

END OF SECTION

SECTION 01720
PROJECT RECORD DOCUMENTS

PART 1.GENERAL

1.01 RELATED SECTIONS.
- A. Shop Drawings, Product Data and Samples: Section 01300

1.02 MAINTENANCE OF DOCUMENTS:
- A. Maintain at Job Site, one copy of:
  1. Contract Drawings
  2. Specifications
  3. Addenda
  4. Reviewed Shop Drawings
  5. Change Orders
  6. Other Modifications to Contract
  7. Field Test Records
- B. Store Documents in temporary Field Office, apart from Documents used for construction.
- C. Provide files and racks for storage of Documents.
- D. Maintain Documents in clean, dry, legible condition.
- E. Do not use Record Documents for construction purposes.
- F. Make Documents available at all times for inspection by Architect/Engineer and Owner.
- G. Maintain records even though no changes are made from original documents.

1.03 MARKING DEVICES
- A. Provide colored pencil for marking, conforming to follow color code.
  1. Red for Architectural Work.
  2. Blue for Structural Work.
  3. Green for Plumbing Work.
  4. Orange for HVAC Work.
  5. Brown for Electrical Work.
  6. Black for other written notations.

1.04 PROJECT RECORD DOCUMENTS:
- A. Label each document "Project Record" in 2 inch high printed letters.
- B. Keep Record Documents current.
- C. Do not permanently conceal any work until required information has been recorded.
- D. Contract Drawings: legibly mark to record actual construction:
  1. Depths of various elements of foundation in relation to First Floor Level.
  2. Horizontal and vertical location of underground utilities and appurtenaces referenced to permanent surface improvements.
  3. Location of internal utilities and appurtenances concealed in construction referenced to visible and accessible features of structure.
  4. Field changes of dimension and detail.
  5. Changes made by change order or written directive.
  6. Details not on original Contract Drawings.

- E. Specifications and Addenda: legibly mark up each Section to record:
  1. Manufacturer, Trade Name, Catalog Number, and Supplier of each product and item of equipment actually installed.
  2. Changes made by change order or written directive.

3. Other matters not originally specified.

F. Shop Drawings: Maintain as Record Documents; legibly annotate following drawings to record changes made after review:
   1. Structural Steel
   2. Reinforcing Steel
   3. Millwork.

1.05 SUBMITTAL:

A. At completion of project, deliver one complete set of mylar sepias and 2 sets of bluelines of all drawings and three sets of specifications containing all changes and modifications that occurred during construction.

B. Accompany submittal with transmittal letter, in duplicate, containing:
   1. Date.
   2. Project Title and Number.
   3. Contractor's Name and Address
   4. Title and Number of each Record Documents.
   5. Certification that each Document as submitted is complete and accurate.
   6. Signature of Contractor, or his Authorized Representative.

1.06 LETTERS FROM GENERAL CONTRACTOR AND OTHERS:

A. General Contractor to submit letters to the owner stating that no asbestos was used in the project.
   1. Mechanical Plumbing
   2 Mechanical HVAC
   3. Ceiling subcontractor and supplier.
   4. Insulation subcontractor and supplier.
   5. Roofing subcontractor and supplier.
   6. Drywall subcontractor and supplier.
   7. Resilient Floor Tile subcontractor and supplier.

END OF SECTION

SECTION 02065
AGGREGATES FOR EARTHWORK

PART 1 GENERAL

1.1 SECTION INCLUDES

A. Aggregate materials.

1.2 RELATED SECTIONS

A. Section 02310 - Rough Grading.

B. Section 2315 - Fill.

C. Section 2720 - Aggregate Base Course.

1.3 REFERENCES

A. AASHTO - M147 - Materials for Aggregate and Soil-Aggregate.

B. AASHTO T180 - Moisture-Density Relations of Soils Using a 10-lb (4.54 kg) Rammer and an 18-in. (457 mm) Drop.

C. ASTM C136 - Method for Sieve Analysis of Fine and Coarse Aggregates.

D. ASTM D1557 - Test Methods for Moisture-Density Relations of Soils and Soil-Aggregate Mixtures Using 10 lb (4.54 Kg) Rammer and 18 inch (457 mm) Drop.

E. ASTM D2167 - Test Method for Density and Unit Weight of Soil in Place by the Rubber Balloon Method.

F. ASTM D2487 - Classification of Soils for Engineering Purposes.

G. ASTM D2922 - Test Methods for Density of Soil and Soil-Aggregate in Place by Nuclear Methods (Shallow Depth).

H. ASTM D3017 - Test Method for Moisture Content of Soil and Soil-Aggregate in Place by Nuclear Methods (Shallow Depth).

I. ASTM D4318 - Test Method for Liquid Limit, Plastic Limit, and Plasticity Index of Soils.

1.4 SUBMITTALS FOR REVIEW

A. Samples: Submit, in air-tight containers, 10 lb (4.5 kg) sample of each type of fill to testing laboratory.

PART 2 PRODUCTS

2.1 COARSE AGGREGATE MATERIALS

A. Coarse Aggregate Type A1 (Gravel): Angular crushed stone free of shale, clay, friable material and debris; graded in accordance with ASTM D2487 Group Symbol GW; within the following limits:

Sieve Size	Percent Passing
2 inches (50 mm)	100
1 inch (25 mm)	95
3/4 inch (19 mm)	95 to 100
5/8 inch (16 mm)	75 to 100
3/8 inch (9 mm)	55 to 85
No. 4	35 to 60
No. 16	15 to 35
No. 40	10 to 25
No. 200	5 to 10

B. Aggregate Type A2 (Pea Gravel): Natural stone; washed, free of clay, shale, organic matter; graded in accordance with ASTM D2487 Group Symbol GM; to the following limits:

1. Minimum Size: 1/4 inch (6 mm)

2. Maximum Size: 5/8 inch (16 mm)

2.2 FINE AGGREGATE MATERIALS

A. Fine Aggregate Type A3 (Sand): Natural river or bank sand; free of silt, clay, loam, friable or soluble materials, and organic matter; graded in accordance with ASTM D2487 Group Symbol SP; within the following limits:

Sieve Size	Percent Passing
No. 4	100
No. 14	10 to 100
No. 50	5 to 90
No. 100	4 to 30
No. 200	0

2.4 SOIL MATERIALS

A. General: Provide borrow soil materials when sufficient satisfactory soil materials are not available from excavations. All borrow soils shall meet the requirements for satisfactory soils and the geotechnical report.

B. Satisfactory Soils: ASTM D 2487 Soil Classification Groups GW, GP, GM, SW, SP, and SM, or a combination of these groups; free of rock or gravel larger than 3 inches (75 mm) in any dimension, debris, waste, frozen materials, vegetation, and other deleterious matter.

C. Unsatisfactory Soils: Soil Classification Groups GC, SC, CL, ML, OL, CH, MH, OH, and PT according to ASTM D 2487, or a combination of these groups.
1. Unsatisfactory soils also include satisfactory soils not maintained within 2 percent

of optimum moisture content at time of compaction.

2.5 BLENDED AGGREGATE MATERIALS

A. Blended Aggregate (Crushed Aggregate Base for Paving): Blended crushed aggregate conforming to City of El Paso Standards.

2.6 SOURCE QUALITY CONTROL

A. Section 01410 - Testing Services.

B. Coarse Aggregate Material - Testing and Analysis: Perform in accordance with ASTM C136.

C. Fine Aggregate Material - Testing and Analysis: Perform in accordance with ASTM C136.

D. If tests indicate materials do not meet specified requirements, change material or material source and retest.

E. Provide materials of each type from same source throughout the Work.

PART 3 EXECUTION

3.1 STOCKPILING

A. Stockpile materials on site at locations designated by the Contracting Officer.

B. Stockpile in sufficient quantities to meet Project schedule and requirements.

C. Separate differing materials with dividers or stockpile apart to prevent mixing.

D. Direct surface water away from stockpile site so as to prevent erosion or deterioration of materials.

3.2 STOCKPILE CLEANUP

A. Remove stockpile, leave area in a clean and neat condition. Grade site surface to prevent free standing surface water.

END OF SECTION

SECTION 02200
SITE CLEARING

PART 1 - GENERAL

1.1 SCOPE

A. The work covered by this section of the specifications consists of preparing the jobsite for construction operations by the removal and disposal of all obstructions from the construction area, right-of-way and from designated easements, where removal of such obstructions is not otherwise provided for in the plans and specifications.

Such obstructions shall include abandoned structures and utility lines, fences, trees, shrubs, vegetation, curbs, gutters, sidewalks, driveways, pavement, concrete and stone rubble, rubbish and all miscellaneous debris.

PART 2 - PRODUCTS

2.1 MATERIAL

A. N/A

PART 3 - EXECUTION

3.1 OBSTRUCTIONS OTHER THAN VEGETATION

A. All concrete, pavement, fences, rubble, trash and miscellaneous debris shall be removed to a depth of 1 foot below natural ground. All remaining holes shall be backfilled with material meeting the requirements for fill and backfill material and then tamped as directed by the Engineer. The Contractor shall complete this operation by blading, bulldozing, or other approved methods so that the jobsite shall be free of holes, ditches, and other abrupt changes in elevation and irregularities of contour.

3.2 CLEARING

A. Clearing shall consist of removal and disposal of trees and other vegetation as well as downed timber, snags, brush and rubbish within the areas to be cleared within the working areas as shown in the drawings. Individual trees, groups of trees or other vegetation not required to be removed and occurring outside the earthwork area shall be protected against unnecessary cutting, breaking or skinning of roots, skinning and brushing of bark, or smothering of trees by stockpiling construction materials or excavated materials within drip lines.

3.3 GRUBBING

A. Stumps, matted roots and roots larger than 2 inches in diameter shall be removed from within 6 inches of the surface of areas on which fills are to be constructed except in roadways. Materials as described above within 18 inches of finished subgrade of roadways in either cut or fill sections shall be removed. Areas disturbed by grubbing will be filled as with material meeting the requirements for fill and backfill material.

3.4 DISPOSAL

A. The Contractor shall dispose of all material removed from the jobsite in a manner satisfactory to the Engineer.

END OF SECTION

SECTION 02300
EARTHWORK

PART 1 -GENERAL

1.01 SCOPE: Work in this section includes furnishing all labor, materials, equipment, and services required to construct, shape, and finish earthwork to the required lines, grades, and cross sections as specified herein and on the plans.

1.02 RELATED WORK SPECIFIED ELSEWHERE

A. Section 02200 - Site Clearing.

B. Grading Plan: Refer to plan sheets.

PART 2 - PRODUCTS

2.01 UNCLASSIFIED EXCAVATION: Unclassified excavation shall consist of all excavation, unless separately designated, within the limits of the work. Unclassified excavation includes all material encountered regardless of its nature or the manner in which it is to be excavated.

2.02 UNCLASSIFIED FILL

A. Unclassified fill shall consist of all fill within the limits of the work. All suitable native materials removed in unclassified excavation, or similar imported materials, shall be used insofar as practicable as unclassified fill. Properly deposited, conditioned, and compacted fill is hereinafter referred to as "earth embankment."

2.03 TOPSOIL

On-Site Topsoil: Topsoil shall consist of an average depth of six inches (6”) of native surface soil left in place after the ground cover of herbaceous vegetation and other objectionable matter has been cleared by "blading," as specified in Section 02200, "Site Clearing." Topsoil may be greater or less, than the upper six inches (6”) in depth.

2.04 IMPORTED FILL

A. Imported fill materials shall be used for the construction of earth embankment in the event that (1) the volume of unclassified excavation is less than the volume of fill required for earth embankment and/or (2) the condition of materials removed in unclassified excavation makes them unsuitable for use in the construction of earth embankment.

B. The Contractor shall haul and place imported fill obtained from off-site sources as necessary to construct the embankment and various other details of the construction plans. All costs related to such imported fill will be included in the contract price, and no additional or separate payment for imported fill will be due the Contractor.

C. A sample of the proposed imported fill must be provided by the Contractor and be approved by the Owner. In general, imported material must be equal to or better than native material in quality and engineering characteristics. The Architect/ Engineer may also require the Contractor to provided a material analysis test of the proposed fill.

2.05 SELECT MATERIALS

A. Select materials shall be imported from offsite sources, unless they are available from specifically designated areas on the site as marked on the plans.

2.06 UNSUITABLE MATERIALS

A. Topsoil, select material, imported fill, or unclassified fill will be declared as '"unsuitable" by the Owner if, in his opinion, any of the following conditions or matter and particles are present to a degree that is judged detrimental to the proposed use of the material.
1. Moisture
2. Decayed or undecayed vegetation
3. Hardpan clay, heavy clay, or clay balls
4. Rubbish
5. Construction rubble
6. Sand or gravel
7. Rocks, cobbles, or boulders
8. Cementious matter
9. Foreign matter of any kind

B. Unsuitable materials will be disposed of as "waste" as specified in Section 02200.

C. Wet Material: If fill material is unsatisfactory for use as embankment solely because of high moisture content, the Architect/Engineer may grant the Contractor permission to process the material to reduce the moisture content to a usable optimum condition.

PART 3 - EXECUTION

3.01 SITE CLEARING: In general, "site clearing," as specified in Section 02200, shall be performed in advance of grading and earthwork operations and shall be completed over the entire area of earthwork operations.

3.02 TOPSOIL

A. The removal and storage of topsoil shall occur after site preparation is complete and before excavation and embankment construction begin. Likewise, topsoil will be replaced after excavation and embankment construction are complete.

B. Removal: Topsoil shall be stripped to an average depth of six inches (6”) from areas where excavation and embankment construction are planned. Topsoil may be obtained from greater depths if it is uncontaminated by the substratum and it is of good quality, in the opinion of the Architect/Engineer.

C. Storage: Topsoil shall be stored in stockpiles conveniently located to areas that will later receive the topsoil. Stockpiles shall be out of the way of earthwork operations in locations approved by the Owner or Architect/Engineer. Stored topsoil shall be kept separate from other excavated materials and shall be protected from contamination by objectionable materials that would render it unsuitable.

D. Timing: Topsoil will not be replaced (deposited) until construction activities are complete that would create undesirable conditions in the topsoil, such as overcompaction or contamination. Trenching for items such as electrical conduit and irrigation pressure lines must be complete

before topsoil replacement may begin.

D. Replacement: Topsoil will be deposited in a single layer or lift. It will be placed, processed, compacted, and graded to leave a finished layer of topsoil not less than five inches in depth. Unless otherwise indicated, topsoil will be replaced over all areas of earthwork (including slopes), except where pavement is planned.

F. Grading: Topsoil will be final graded to the elevations shown on the plans. Fine grading will be accomplished with a weighted spike harrow, weighted drag, tractor box blade, light maintainer, or other acceptable machinery. All particles of the finish grade shall be reduced to less than one inch in diameter or they shall be removed. All rocks of one inch or greater shall also be removed. Grading operations and equipment will be such that topsoil does not become overcompacted. Bulldozer blades and front-end loader buckets are not acceptable devices for topsoil grading operations. **Final grading within five feet of constructed or installed elements shall be hand raked.**

G. Acceptability: Finished areas of topsoil are satisfactory if they are true to grade, true in plane, even in gradient (slope), uniform in surface texture, and of normal compaction. Areas of loose granular pockets or of overcompacted soils are not acceptable and will be reworked. Finished areas will promote surface drainage and will be ready for turfgrass planting.

3.03 UNCLASSIFIED EXCAVATION

A. All excavated areas shall be maintained in a condition to assure proper drainage at all times, and ditches and sumps shall be constructed and maintained to avoid damage to the areas under construction.

B. Surplus Material:
1. Surplus excavation is that quantity of material that may be left over after the grading plan is executed, and all earthwork operations, including excavation, embankment construction, topsoil replacement, and final grading, are completed. Any other surplus material shall be disposed of as "waste" as specified in Section 02200. All such cost for removal shall be considered as incorporated into Earthwork costs

C. Excavation in Rock: The use of explosives will not be permitted. Unless otherwise indicated on the plans, excavation in solid rock shall extend six inches (6”) below required subgrade elevation for the entire width of the area under construction and shall be backfilled with suitable materials as indicated on the plans.

3.04 EARTH EMBANKMENT

A. Earth embankment is defined as embankment composed of suitable materials removed in unclassified excavation and/or imported fill. The construction of embankment includes preparing the area on which fill is to be placed and the depositing, conditioning, and compaction of fill material.

B. General: Except as otherwise required by the plans, all embankment shall be constructed in layers approximately parallel to the finished grade of the graded area, and each layer shall be so constructed as to provide a uniform slope as shown on the grading plan. Embankments shall be constructed to correspond to the general shape of the typical sections shown on the plans, and each section of the embankment shall correspond to the detailed section or slopes established by the drawings. After completion of the graded area, embankment shall be

continuously maintained to its finished section and grade until the project is accepted.

C. Preparation: Prior to placing any embankment, all preparatory operations will have been completed on the excavation sources and areas over which the embankment is to be placed. The subgrade shall be proof rolled to detect soft spots, which if exist, should be reworked. Proof rolling shall be performed using a heavy pneumatc tired roller, loaded dump truck, or similar piece of equipment weighing approximately twenty five (25) tons except as otherwise specified for tree protection and areas inaccessible to vehicular compactors. Stump holes or other small excavations in the limits of the embankments shall be backfilled with suitable material and thoroughly tamped by approved methods before commencing embankment construction. The surface of the ground, including plowed, loosened ground, or surfaces roughened by small washes or otherwise, shall be restored to approximately its original slope by blading or other methods, and, where indicated on the plans or required by the Owner, the ground surface, thus prepared, shall be compacted by sprinkling and rolling.

D. Scarification: The surface of all areas and slopes over which fill is to be placed, other than rock, shall be scarified to a depth of approximately six (6") inches to provide a bond between the existing surface and the proposed embankment. Scarification shall be accomplished by plowing, discing, or other approved means. Prior to fill placement, the loosened material shall be adjusted to the proper moisture content and recompacted to the density specified herein for fill.

E. Benching: Scarification is normally adequate for sloping surfaces. However, in certain cases where fill is to be placed against hillsides or existing embankment with slopes greater than 4:1, the Owner may direct the Contractor to key the fill material to the existing slopes by benching. A minimum of two feet (2') normal to the slope shall be removed and recompacted to insure that the new work is constructed on a firm foundation free of loose or disturbed material.

F. Depositing: Fill material shall be placed in horizontal layers or lifts, evenly spread, not to exceed eight (8") inches in loose depth before conditioning and compaction. Unless otherwise permitted, each layer of fill material shall cover the length and width of the area to be filled and shall be conditioned and compacted before the next higher layer of fill is placed. Adequate drainage shall be maintained at all times.

G. Watering: At the time of compaction, the moisture content of fill material shall be such that the specified compaction will be obtained, and the fill will be firm, hard, and unyielding. Fill material which contains excessive moisture shall not be compacted until it is dry enough to obtain the specified compaction.

H. Compacting: Each layer of earth fill shall be compacted by approved tamping or sheepsfoot rollers, pneumatic tire rollers, or other mechanical means acceptable to the Owner. Hand-directed compaction equipment shall be used in areas inaccessible to vehicular compactors.

I. Grading: Embankments shall be constructed in proper sequence and at proper densities for their respective functions. All embankment serves in one capacity or another as subgrade (e.g., under topsoil, under concrete and asphalt pavement, under structures, etc.). Accordingly, the upper layer of embankment shall be graded to within plus or minus 0.10 foot of proper subgrade elevation prior to depositing topsoil, and prior to the construction of pavements, slabs, etc.

3.05 MOISTURE MAINTENANCE: The specified moisture content shall be maintained in all embankments that are to function as subgrade for structures, areas of pavement, or for select

embankment. After completion of the embankment, the Contractor shall prevent excessive loss of moisture in the embankment by sprinkling as required. Loss of moisture in excess of two percent (2%) below optimum in the top twelve inches (12") of the fill will require that the top twelve inches (12") of the embankment be scarified, wetted, and recompacted prior to placement of the structure, select fill or pavement. If desired, the Contractor may place an asphalt membrane of emulsified or cutback asphalt over the completed embankment and thus eliminate the sprinkling requirement.

3.06 TOPSOIL REPLACEMENT: Topsoil shall be carefully placed to avoid any displacement or damage to the subgrade. If any of the subgrade is rutted, damaged or displaced it shall be restored prior to placing topsoil. Topsoil shall be replaced as specified herein per Item 3.02.

END OF SECTION

SECTION 02310
Rough Grading

PART 1 GENERAL

1.1 SECTION INCLUDES

A. Removal of subsoil and subgrade.

B. Cutting, grading, filling, rough contouring and compacting the site for site structures.

1.2 REGULATORY REQUIREMENTS

A. Obtain required permits from authorities.

B. Conform to applicable codes for grading.

1.3 REFERENCES

A. ASTM D1557 – Test Methods for Moisture-Density Relations of Soils and Soil-Aggregate Mixtures using 10 lb (4.54 Kg) rammer and 18 inch (457 mm) Drop.

B. ASTM D2922 – Test Methods for Density of Soil and Soil-Aggregate in Place by Nuclear Methods (Shallow Depth).

C. ASTM D3017 – Test Methods for Moisture Content of Soil and Soil-Aggregate Mixtures.

PART 2 PRODUCTS

2.1 MATERIALS

A. Select Fill.

B. Crushed Stone Base Course.

PART 3 EXECUTION

3.1 EXAMINATION

A. Verify site conditions.

B. Verify that survey benchmark and intended elevations for the Work are as indicated.

3.2 PREPARATION

A. Identify required lines, levels, contours, and datum.

B. Stake and flag locations of known utilities.

C. Locate, identify, and protect utilities that remain, from damage.

D. Notify utility field locators to identify existing utilities and depths.

E. Protect above and below grade utilities that remain.

F. Protect plant life, lawns and other features remaining as a portion of final landscaping.

G. Protect benchmarks, survey control point, existing structures, fences, sidewalks, paving, and curbs from excavating equipment and vehicular traffic.

3.3 SUBSOIL EXCAVATION

A. Excavate subsoil from areas to be further excavated or re-graded.

B. Do not excavate wet subsoil or excavate and process wet material to obtain optimum moisture content.

C. When excavating through roots, perform work by hand an cut roots with sharp axe.

D. Remove subsoil from site.

E. Stability: Replace damaged or displaced subsoil to same requirements as for specified fill.

3.4 FILLING

A. Install Work in accordance with City of El Paso standards.

B. Fill areas to contours and elevations with unfrozen materials.

C. Place fill material on continuous layers and compact as shown on plans.

D. Maintain optimum moisture content of fill materials to attain required compaction density.

E. Make grade changes gradual. Blend slope into level areas.

F. Remove surplus fill materials from site.

3.5 TOLERANCES

A. Top Surface of Subgrade: Plus or minus 1/10 foot from required elevation.

3.6 FIELD QUALITY CONTROL

A. Testing: In accordance with ASTM D1557, ASTM D2922 and ASTM D3017.

B. If tests indicate Work does not meet specified requirements, remove Work, replace and retest.

C. Frequency of Tests:
1. One Laboratory Compaction Characteristic of Soil using Modified Effort (Proctor) for each type of material encountered or import material used, according to ASTM D1557.
2. One Soil Classification for each type of material encountered or import material used, according to ASTM D422 and ASTM D4318.
3. A minimum of one density test per 100 linear feet for the cleared surfaces, bottom of excavation, each lift of subbase, base course, and hot-mix asphaltic concrete,

according to ASTM D2922, ASTM D1556, and ASTM D2950, as applicable.

3.7 SCHEDULES

A. Select Fill (shall be verified by independent geotechnical investigation):

1. Material shall be granular and free of deleterious material, cobbles or boulders over 3-inches in nominal size.
2. The select fill shall have a liquid limit of less than 35 and plasticity index of less than 14.
3. Systematically backfill to allow maximum time for natural settlement. Do not backfill over porous, wet, frozen or spongy subgrade surfaces.
4. Subsoil-Subgrade, Subsoil-Select Fill: Place and compact material in equal continuous layers not exceeding eight (8) inches compacted depth. Compact to a minimum 95 percent of maximum density.
5. Soils classified in the following list according to the USCS can be considered satisfactory for use as structural or select fill: SW, SP, SM, SC, SW-SM, SW-SC, SP-SC, SC-SM, GW, GP, GM, GC, GW-GM, GW-GC, GP-GM, and GP-GC.
6. Soils classified as CH, CL, MH, ML, OH, OL and Pt under the USCS are not considered suitable for use as select fill.
7. The moisture content of the fill shall be maintained within the range of 3-percentage points of the optimum moisture content until final compaction.

END OF SECTION

SECTION 02315
FILL

PART 1 GENERAL

1.1 SECTION INCLUDES

A. Building perimeter backfilling to subgrade elevations.

B. Site filling and backfilling.

C. Fill under slabs-on-grade.

D. Fill under paving.

E. Fill for over-excavation.

F. Consolidation and compaction as scheduled.

1.2 REFERENCES

A. ASTM D1557 - Test Methods for Laboratory Compaction Characteristics of Soil Using Modified Effort

B. ASTM D6938 – Test Method for In-Place Density and Water Content of Soil and Soil-Aggregate by Nuclear Methods (Shallow Depth)

C. ASTM D1556 - Test Method for Density of Soil in Place by the Sand-Cone Method.

PART 2 PRODUCTS

2.1 FILL MATERIALS

A. Fill

B. Structural Fill

C. Concrete: Lean concrete with a compressive strength of 1500 psi.

PART 3 EXECUTION

3.1 EXAMINATION

A. Verify subdrainage, dampproofing, or waterproofing installation has been inspected.

B. Verify underground tanks are anchored to their own foundations to avoid flotation after backfilling.

C. Verify structural ability of unsupported walls to support imposed loads by the fill.

3.2 PREPARATION

A. Compact subgrade to density requirements for subsequent backfill materials.

B. Cut out soft areas of subgrade not capable of compaction in place. Backfill and compact to density equal to or greater than requirements for subsequent fill material.

C. Scarify and proof roll subgrade surface to a depth of 6 inches (150 mm) to identify soft spots; fill and compact to density equal to or greater than requirements for subsequent fill material.

3.3 BACKFILLING

A. Backfill areas to contours and elevations with unfrozen materials.

B. Systematically backfill to allow maximum time for natural settlement. Do not backfill over organic, porous, wet, frozen or spongy subgrade.

C. Granular Fill: Place and compact materials in equal continuous layers not exceeding 8 inches (200 mm) compacted depth.

D. Soil Fill: Place and compact material in equal continuous layers not exceeding 8 inches (200 mm) compacted depth.

E. Employ a placement method that does not disturb or damage other work.

F. Maintain optimum moisture content of backfill materials to attain required compaction density.

G. Backfill against supported foundation walls and piers. Do not backfill against unsupported foundation walls and piers.

H. Backfill simultaneously on each side of unsupported foundation walls until supports are in place.

I. Slope grade away from building minimum 2 inches in 10 ft (50 mm in 3 m), unless noted otherwise.

J. Make gradual grade changes. Blend slope into level areas.

K. Remove surplus backfill materials from site.

L. Leave fill material stockpile areas free of excess fill materials.

3.4 TOLERANCES

A. Top Surface of Backfilling Under Paved Areas: Plus or minus 1 inch (25 mm) from required elevations.

B. Top Surface of General Backfilling: Plus or minus 1 inch (25 mm) from required elevations.

3.5 FIELD QUALITY CONTROL

A. Laboratory Compaction testing will be performed in accordance with ASTM D1557. Density Tests for soils and soil aggregate mixtures will be performed in accordance with ASTM D6938

or ASTM D1556.

B. If tests indicate Work does not meet specified requirements, remove Work, replace and retest.

C. Frequency of Tests: perform one test per lift at the following rate:
1. Perform one test per lift per every 5000 square feet or less under all concrete slabs on grade, and under all paved areas.
2. Perform one test per lift per every 100 lineal feet or less under all wall footings.
3. Perform one test per lift under each column footing.

3.6 PROTECTION OF FINISHED WORK

A. Protect finished Work from vehicular traffic and other equipment or operations which disturb the placed and compacted fill.

B. Reshape and re-compact fills subjected to vehicular traffic or other damage.

3.7 SCHEDULE

A. Interior Slab-On-Grade:
1. Fill compacted to 95 percent maximum density, ASTM D1557.

B. Exterior side of foundation walls and retaining walls:
1. Fill to subgrade elevation, each lift, compacted to 95 percent maximum density, ASTM D1557.

C. Fill Under Grass Areas:
1. Fill to 6 inches (150 mm) below finish grade, compacted to 90 percent maximum density, ASTM D1557.

D. Fill Under Landscaped Areas:
1. Fill to 12 inches (300 mm) below finish grade, compacted to 90 percent maximum density, ASTM D1557.

E. Fill Under Asphalt Paving:
1. Compact subsoil to 95 percent of its maximum dry density.
2. Fill to bottom of aggregate base, compacted to 95 percent maximum density, ASTM D1557.

F. Fill Under Concrete Paving:
1. Compact subsoil to 95 percent of its maximum dry density.
2. Fill to bottom of concrete paving, compacted to 95 percent maximum density, ASTM D1557.

G. Fill to Correct Over-excavation: Contractor's option of the two following methods:
1. Lean concrete to minimum compressive strength of 1500 psi.
2. Fill flush to required elevation, compacted to 95 percent maximum density, ASTM D1557.

END OF SECTION

SECTION 02630
STORM DRAINAGE

1.01 GENERAL SCOPE:

A. All Storm sewer piping, as shown on the drawings, shall be installed as specified herein. All materials shall be installed in accordance with the approved recommendations of the manufacturer, shall conform to these specifications and shall be accomplished by workmen skilled in the type of work to be performed.

2.01 MATERIALS:

A. As Specified in Construction Plans.

3.01 TRENCHING

A. Pipe trenches shall be excavated to the lines, and grades shown on the drawings or as established by the Engineer or his/her designated representative. The minimum width of the trench at the spring line of the pipe shall be the outside diameter of the pipe plus twelve (12) inches and the maximum width shall be the outside diameter of the pipe plus twenty-four (24) inches.

Where special pipe bedding is not required, the trench shall be excavated to an even grade so that the bottom of the pipe will rest on the bottom of the trench throughout the entire length of the pipe. In order to obtain a true even grade the trench shall be fined graded and shaped to fit the bottom 90° of the pipe shown on the drawings. Any part of the trench excavated below grade shall be corrected by filling with approved material and thoroughly compacting. If rock or other unyielding material is encountered in bottom of the trench, it shall be removed to a depth of six (6) inches below grade, refilled with selected materials and thoroughly compacted to grade. Where the soil encountered at established footing grade is a quicksand, muck, or similar unstable material, the following procedure shall be used unless other methods are called for on the plans.

The depth to which unstable material is removed shall not exceed two feet below the footing of manholes that are two feet or more in height, and shall not exceed the height of manholes for those less than two (2) feet high unless otherwise directed by the Engineer or his/her designated representative. Excavation shall be carried at least one (1) foot horizontally beyond the limits of the structure on all sides. All unstable soil removed shall be replaced with suitable stable material, in uniform layers of suitable depth for compaction.

Each layer shall have the proper moisture content and shall be compacted by adequate rolling or tamping as required to provide a stable foundation for the structure.

Bell holes of ample dimensions shall be dug at each joint to permit the jointing of the pipe to be made properly.

Any ground water encountered during excavation shall be removed by the Contractor in such manner as to allow the trenching and pipe laying operations to proceed.

The groundwater shall be lowered to a depth of three (3) vertical feet below the bottom of the trench and shall be maintained at that level until completion of the compacted backfill.

Dewatering shall be accomplished by a minimum of three (3) wells spaced to maintain an adequate dry construction area for pipe laying, bedding and backfill. Piezometer stations shall be

installed midway between each well to monitor the groundwater level. It will be the Contractor's responsibility to dispose of all groundwater and there will be no additional payment for such disposal.

Upon completion of the pipeline construction, the groundwater shall be returned to its normal water level at a controlled rate. This rate of return shall be determined by the Engineer or his/her designated representative.

Trench digging machinery may be used to make trench excavations except in places where operation of same would cause damage to existing structures either above or below ground; in such instances, hand methods shall be employed. The Contractor shall locate all existing underground lines, of which he has been advised whether or not they are shown on the drawings, sufficiently in advance of trenching operations to prevent any damage thereto. Extreme care shall be used to prevent such damage and the Contractor shall be fully responsible for damage to any such lines.

There will be no classification of excavated materials and all materials encountered shall be excavated as required. Adjacent structures shall be protected from damage by construction equipment. All excavated material shall be piled along the trench in a manner which will not endanger the work.

Excavation for manholes shall be made as required to provide space for constructing the structure. In paved areas, manhole excavations shall be kept to the minimum required to construct the manhole and any excess pavement removed shall be replaced at the expense of the Contractor.

3.2 PIPE INSTALLATION

A. Handling of Pipe and Accessories: All pipe, fittings, valves and other accessories shall, unless otherwise directed, be unloaded at the point of delivery, hauled to and distributed at the site of the work by the Contractor.

In loading and unloading, they shall be lifted by hoist or slid or rolled on skid-way in such a manner as to avoid shock or damage to the materials. Under no circumstances shall they be dropped. Pipe handled on skid-ways must not be skidded or rolled against pipe already on the ground.

B. Installation of Pipe in Trench: A pipe bed shall be prepared as shown on the drawings by compacting six (6) inches of the shaped subgrade to 90% as determined by ASTM D-1557.

Immediately after a length of concrete pipe is lowered in the trench, all dirt and foreign substance in the bell and rubber gasket groove shall be removed. Then the bell shall be lubricated liberally by rubbing lubricant over the inside surfaces and leading edge of the bell. The lubricant shall be flax soap or an approved equal. The "O" ring shall also be lubricated thoroughly before stretching the gasket around the spigot. After lubricating the gasket, the gasket shall be fit carefully by stretching the gasket and snapping it into the groove. A small tool shall be inserted between the gasket and groove and run around the circumference to equalize the rubber gasket stretch. Position the bell by removing the sub-base below the bell. Afterwards, align the spigot with the bell of pipe previously laid. Check if the gasket is in contact with the flared bell surface around the entire circumference before coupling the pipe. Then couple the joint by pulling the spigot straight into the bell by utilizing a winch, come-along or other approved method. A steady uniform force shall be used. Pipe laying shall proceed upgrade with spigot ends pointing downgrade. All pipe shall be laid true to the lines and grades as established by the Engineer or his/her designated representative. Grade may be established by laser beam or batter boards (not exceeding fifty (50)

foot intervals) and a string line shall be used and each length of pipe set to grade from the string line with a grade rod equipped with a "shoe" designed to set in the flow line of the pipe. At least three (3) batter boards shall be in position at a time.

The work shall be watertight at all joints and any leaks or defects shall be immediately repaired. Any pipe which has been disturbed from any cause after being laid in its final position shall be taken up, the joint cleaned and the pipe properly relaid.

C. Backfilling: All trenches shall be backfilled in accordance with this section as soon as practicable after the pipe has been installed with the specified bedding condition.

1. Selected Fill: Selected fill shall be placed around the pipe up to a distance of twelve (12) inches over the pipe. The selected fill shall be the most granular material available from the excavation spoil bank. The material shall be free from rocks, boulders, or other unsuitable material. The selected fill material shall be placed carefully under and around the pipe and thoroughly compacted in six (6) inch layers with approved mechanical tamps until a minimum density equal to that of 90% of maximum density as outlined in AASHO T-180 is obtained.

2. Backfill: The backfill material installed above the selected fill shall be the remaining material from the excavation soil bank. Backfill shall be free of vegetation and trash. The pipe shall be protected from impact by large boulders, etc. Backfill shall be placed in lifts not exceeding eight (8) inches and shall be compacted to 95% of maximum density as determined by ASTM D-1557. Trenching in street section shall have 95% density.

After the trench has been backfilled and the dewatering has been discounted for at least three (3) days or after the trench backfill has been flooded, the joints shall be checked for water-tightness. Any visible leakage observed shall be sealed by the Contractor in a manner approved by the Engineer or his/her designated representative.

Following the completion of the backfilling, the Contractor will maintain trench surfaces in a satisfactory manner until final completion and acceptance.

3.3 PROTECTION OF EXISTING IMPROVEMENTS

A. During construction, care shall be exercised to prevent damage to existing facilities. Any facilities damaged as a result of the construction shall be repaired or replaced at the Contractor's expense to the satisfaction of the owner. Any removed traffic signs shall be replaced.

B. All methods—The following provisions apply to all methods of measurement and payment. No deduction in volume will be made for any void or embedded item. Compensation for any item of work described in the contract, but not listed in the bid schedule, is included in the payment for the item of work to which it is made subsidiary.

3.4 PUBLIC SAFETY

A. The Contractor shall provide, erect, and maintain all necessary barricades, suitable and sufficient flasher lights, flag-men, danger signals, and signs; and shall take all necessary precautions for the protection of the work and the safety of the public.

3.4 LANSCAPE PRESERVATION

A. The Contractor shall exercise care to preserve the natural landscape and shall conduct his construction operations so as to prevent any unnecessary destruction, scarring, or defacing of the natural surroundings in the vicinity of the work. Except where clearing is required for permanent work, for approved construction roads and for excavation operations, all trees, native shrubbery, and vegetation shall be preserved and shall be protected from damage which may be caused by the Contractor's construction operations and equipment. Movement of crews and equipment within the right-of-way and over routes used for access to the work shall be performed in a manner to prevent damage to existing facilities.

No special reseeding or replanting will be required under these specifications; however, on completion of the work, the work area shall be smoothed and graded in a manner to conform to the original appearance of the landscape.

END OF SECTION

SECTION 02720
AGGREGATES FOR BASE COURSE

PART 1 GENERAL

1.1 RELATED WORK SPECIFIED ELSEWHERE

A. Site Clearing: Section 02200.

B. Rough Grading: Section 2310.

C. Aggregates for Earthwork: Section 02065.

D. Asphalt Paving: Section 02740.

1.2 QUALITY ASSURANCE

A. Qualifications of Asphalt Concrete Producer: Use only materials which are furnished by a bulk asphalt concrete producer regularly engaged in production of hot-mix, hot-laid asphalt concrete.

B. Contractor is responsible to include sampling and testing asphalt concrete materials proposed, and tests and calculations for asphalt concrete mixtures.

C. Field quality control tests to be provided through laboratory accepted and paid for by the Contractor.

D. Install asphalt concrete paving to meet the requirements of EPDOT.

1.3. INSPECTION:

A. In-place compacted thickness shall not be acceptable if exceeding 1/4 inch allowable variation from thickness shown on drawings.

B. Contractor shall repair holes from test specimens as specified for patching defective work.

C. Surface Smoothness:
1. Inspect finished surface of each asphalt concrete course for smoothness, using a 10 foot straightedge applied parallel to and at right angles to centerline of paved areas.
2. Surfaces will not be acceptable if exceeding the following:
a. Base Course: 1/4 inch in 10 feet

1.4 SUBMITTALS

A. Samples: Provide samples of materials for laboratory testing and job-mix design.

B. Certificates:
1. Provide certificates, in lieu of laboratory test reports.
2. Certify that materials comply with specification requirements.
3. Signed by asphalt concrete producer and Contractor.

PART 2 PRODUCTS

2.1 MATERIALS

Asphalt Concrete shall conform to type specified on the plans or in the Contract. In the event Marshall design densities begin to exceed 98 percent of theoretical maximum density during construction, the Contractor shall alter the grading of the aggregate from a different source.

2.2 ASPHALT-AGGREGATE MIXTURES

A. Job-mix Criteria:
1. Provide job-mix formulas for each required asphalt-aggregate mixture.
2. Establish a single percentage of asphalt cement to be added to aggregate, and a single temperature at which asphalt concrete is to be produced.
3. Maintain Material quantities with allowable tolerances of the governing standards.

PART 3 EXECUTION

3.1 FRAME ADJUSTMENTS

A. Set frames of subsurface structures to final grade as a part of this work.

B. Placing frames:
1. Surround frames set to elevation with a ring of compacted asphalt concrete base prior to paving.
2. Place asphalt concrete mixture up to 1 inch below top of frame, slope to grade, and compact by hand tamping.

C. Adjust frames to proper position to meet paving.

D. If permanent covers are not in place, provide temporary covers over openings until completion of rolling operations.

E. Set cover frames to grade, flush with surface of adjacent pavement.

3.2 TRANSPORTING

A. Transport asphalt concrete mixtures from mixing site in trucks having tight, clean compartments.

B. Coat hauling compartments with a lime-water mixture to prevent asphalt concrete mixture from sticking.

C. Elevate and drain compartment of excess solution before loading mix.

D. Provide covers over asphalt concrete mixture when transporting to protect from weather and to prevent loss of heat.

E. During periods of cold weather or for long distance deliveries, provide insulation around entire truck bed surfaces.

3.3 EQUIPMENT

A. Provide size and quantity of equipment to complete the work specified within the project time schedule.

B. Bituminous Pavers; Self-propelled that spread hot asphalt concrete mixtures without tearing, shoving or gouging surfaces, and control pavement edges to true lines without use of stationary forms.

C. Rolling Equipment:
1. Self-propelled, steel-wheeled and pneumatic-tired rollers that can reverse direction without backlash.
2. Other type rollers may be used if acceptable to the Contracting Officer.

D. Hand Tools: Provide rakes, lutes, shovels, tampers, smoothing irons, pavement cutters, portable heaters, and other miscellaneous small tools to complete the work specified.

3.4 PLACING THE MIX

A. Place asphalt concrete mixture on prepared surface, spread and strike-off using paving machine.

B. Spread mixture at a minimum temperature of 225 degrees F. (107.2 degrees C.).

C. Inaccessible and small areas may be placed by hand.

D. Place each course at thickness so that when compacted it will conform to the indicated grade, cross-section, finish thickness, and density indicated.

E. Paver Placing:
1. Unless otherwise directed, begin placing along centerline of areas to be paved on crowned section, and at high side of sections on one-way slope, and in direction of traffic flow.
2. After first strip has been placed and rolled, place succeeding strips and extend rolling to overlap previous strips.
3. Complete base courses for a section before placing surface courses.
4. Place mixture in continuous operation as practicable.

F. Hand Placing:
1. Spread, tamp, and finish mixture using hand tools in areas where machine spreading is not possible, as acceptable to Contracting Officer.
2. Place mixture at a rate that will insure handling and compaction before mixture becomes cooler than acceptable working temperature.

G. Joints:
1. Carefully make joints between old and new pavements, or between successive days work, to ensure a continuous bond between adjoining work. All joints shall be sealed with a protective coating of liquid asphalt sealer.
2. Construct joints to have same texture, density and smoothness as adjacent sections of asphalt concrete course.
3. Clean contact surfaces free of sand, dirt, or other objectionable material and apply tack coat.
4. Offset transverse joints in succeeding course not less than 24 inches.
5. Cut back edge of previously placed course to expose an even, vertical surface for full course thickness.

6. Offset longitudinal joints in succeeding courses not less than 6 inches.
7. When the edges of longitudinal joints are irregular, honeycombed, or inadequately compacted, cut back unsatisfactory sections to expose an even, vertical surface for full course thickness.

3.5 COMPACTING THE MIX

A. Provide sufficient rollers to obtain the required pavement density.

B. Begin rolling operations as soon after placing when the mixture will bear weight of roller without excessive displacement.

C. Do not permit heavy equipment, including rollers to stand on finished surface before it has thoroughly cooled or set.

D. Compact mixture with hot hand tampers or vibrating place compactors in areas inaccessible to rollers.

E. Start rolling longitudinally at extreme lower side of sections and proceed toward center of pavement. Roll to slightly different lengths on alternate roller runs.

F. Do not roll centers of sections first under any circumstances.

G. Breakdown Rolling:
1. Accomplish breakdown or initial rolling immediately following rolling of transverse and longitudinal joints and outside edge.
2. Operate rollers as close as possible to paver without causing pavement
1. displacement.
3. Check crown grade and smoothness after breakdown rolling.
4. Repair displaced areas by loosening at once with lutes or rakes and filling, if
1. required, with hot loose material before continuing rolling.

H. Second Rolling:
1. Follow breakdown rolling as soon as possible while mixture is hot and in condition for compaction.
2. Continue second rolling until mixture has been thoroughly compacted.

I. Finish Rolling:
1. Perform finish rolling while mixture is still warm enough for removal of roller marks.
2. Continue rolling until roller marks are eliminated and course has attained specified density.

J. Patching:
1. Remove and replace defective areas.
2. Cut-out and fill with fresh, hot asphalt concrete.
3. Compact by rolling to specified surface density and smoothness.
4. Remove deficient areas for full depth of course.
5. Cut sides perpendicular and parallel to direction of traffic with edges vertical.
6. Apply tack coat to exposed surfaces before placing new asphalt concrete mixture.

END OF SECTION

SECTION 02740
ASPHALTIC CONCRETE

PART 1 GENERAL

1.1 SECTION INCLUDES

A. Asphaltic concrete paving, wearing course.

B. Bituminous Tack Coat.

1.2 RELATED SECTIONS

A. Section 02310 - Rough Grading.

B. Section 02315 - Fill.

1.3 REFERENCES

A. ASTM D946 - Penetration-Graded Asphalt Cement for Use in Pavement Construction.

B. TAI - (The Asphalt Institute) - MS-2 Mix Design Methods for Asphalt Concrete and Other Hot Mix Types.

C. TAI - (The Asphalt Institute) - MS-3 Asphalt Plant Manual.

D. TAI - (The Asphalt Institute) - MS-8 Asphalt Paving Manual.

E. TAI - (The Asphalt Institute) - MS-19 Basic Asphalt Emulsion Manual.

1.4 QUALITY ASSURANCE

A. Perform Work in accordance with City of El Paso Standards.

B. Mixing Plant: Conform to City of El Paso Standards.

C. Obtain materials from same source throughout.

1.5 ENVIRONMENTAL REQUIREMENTS

A. Do not place asphalt when ambient air or base surface temperature is less than 40 degrees F (4 degrees C), or surface is wet or frozen.

B. Place bitumen mixture when temperature is not more than 15 F degrees (8 C degrees) below bitumen suppliers bill of lading and not more than maximum specified temperature.

PART 2 PRODUCTS

2.1 MATERIALS

A. Asphalt Cement: In accordance with City of El Paso Standards.

B. Aggregate for Wearing Course Mix: In accordance with City of El Paso Standards.

C. Bituminous Tack Coat: In accordance with City of El Paso Standards.

2.2 ASPHALT PAVING MIX

A. Use dry material to avoid foaming. Mix uniformly.

B. Wearing Course: Mixture in accordance with City of El Paso Standards.

2.3 SOURCE QUALITY CONTROL

A. Submit proposed mix design of each class of mix for review prior to beginning of work.

B. Test samples in accordance with TAI MS-2.

PART 3 EXECUTION

3.1 EXAMINATION

A. Verify that asphalt paving leveling course is clean, dry, free of ice, debris, and defects that will adversely affect the finished wearing course. Verify that asphalt paving leveling course is compacted to the specified density, and will support the loads imposed by placement of the wearing course.

B. Verify gradients and elevations of leveling course are correct.

3.2 SUBBASE

A. The existing asphaltic concrete paving forms the base construction for work of this section.

3.3 PREPARATION AND PLACEMENT - TACK COAT

A. The existing surface shall be patched, rendered free of irregularities to the extent necessary to provide a smooth surface.

B. Immediately prior to applying tack coat, the contractor shall thoroughly clean and remove all debris from the surface. The surface shall be thoroughly dry.

C. The bituminous tack coat shall be uniformly distributed at the rate indicated on the drawings.

D. All areas and spots missed by the distributor shall be treated with a hand sprayer to insure thorough coverage.

E. The treated area shall be protected from damage and soil until the wearing course is applied.

3.4 PLACING ASPHALT PAVEMENT

A. Install Work in accordance with City of El Paso Standards.

B. Place asphalt within 24 hours of applying tack coat.

C. Place to 1/2 inch (12 mm) compacted thickness indicated in the drawings.

D. Install drainage grilles and frames, manhole frames in correct position and elevation.

E. Compact pavement by rolling to specified density. Do not displace or extrude pavement from position. Hand compact in areas inaccessible to rolling equipment.

F. Perform rolling with consecutive passes to achieve even and smooth finish without roller marks.

3.5 TOLERANCES

A. Flatness: Maximum variation of 1/4 inch (6 mm) measured with 10 foot (3 m) straight edge.

B. Scheduled Compacted Thickness: Within 1/4 inch (6 mm).

C. Variation from True Elevation: Within 1/4 inch (6 mm).

3.6 FIELD QUALITY CONTROL

A. Take samples and perform tests in accordance with TAI.

B. Test results shall meet the minimum density required by the City of El Paso Standards.

3.7 PROTECTION

A. Immediately after placement, protect pavement from mechanical injury until surface temperature is less than 140 degrees F (60 degrees C).

3.8 SCHEDULES

A. Pavements shall be installed at the thicknesses indicated on the drawings for the various areas of asphalt paving.

END OF SECTION

SECTION 02750
PORTLAND CEMENT CONCRETE PAVING

PART 1 GENERAL

1.1 SECTION INCLUDES

A. Concrete curb and gutter and sidewalks.

1.2 RELATED SECTIONS

A. Section 02310 - Rough Grading.

B. Section 02315 – Fill.

C. Section 02720 – Aggregates Base Course.

1.3 REFERENCES

A. ACI 301 – Specifications for Structural Concrete for Buildings.

B. ACI 304 – Recommended Practice for Measuring, Mixing, Transporting and Placing Concrete.

C. ASTM A185 – Welded Steel Wire Fabric for Concrete Reinforcement.

D. ASTM A497 – Welded Deformed Steel Wire Fabric for Concrete Reinforcement.

E. ASTM A615 – Deformed and Plain Billet-Steel for concrete Reinforcement.

F. ASTM C33 – Concrete Aggregates.

G. ASTM C94 – Ready Mix Concrete.

H. ASTM C150 – Portland Cement.

I. ASTM C309 – Liquid Membrane-Forming Compounds for Curing Concrete.

K. ASTM C494 – Chemical Admixtures for Concrete.

L. ASTM D1751 – Preformed Expansion joint Fillers for Concrete Paving and Structural Construction.

1.4 SUBMITTALS

A. Product Data: Provide data on joint filler, admixtures and curing compounds.

1.5 QUALITY ASSURANCE

A. Perform work in accordance with ACI 301.

B. Obtain cementitious materials from same source throughout.

1.6 REGULATORY REQUIREMENTS

A. Conform to applicable standards for paving work on public property.

1.7 ENVIRONMENTAL REQUIREMENTS

A. Do not place concrete when base surface temperature is less than forty (40 degrees F) degrees Fahrenheit.

B. Do not place concrete during rain, sleet, or snow.

PART 2 PRODUCTS

2.1 FORM MATERIALS

A. Form Materials:
1. Steel, used or other suitable material of size and strength to resist movement during concrete placement and to retain horizontal and vertical alignment until removal. Use straight forms, free of distortion and defects.
2 Use flexible spring steel forms or laminated boards to form radius bends as required.
3. Coat forms with a non-staining form release agent that will not discolor or deface of concrete.

2.2 REINFORCEMENT

A. Reinforcing Steel: ASTM A615; 60 ksi yield grade; deformed billet steel bars; unfinished finish.

B. Welded Steel Wire Fabric: Plain type, ASTM A185; in coiled rolls finish.

C. Dowels: ASTM A615; 60 ksi yield grade, plain steel, unfinished finish.

2.3 CONCRETE MATERIALS

A. Concrete Materials: As specified in this section.

2.4 ACCESSORIES

A. Curing Compound: ASTM C309, Type 1, Class A.

B. Joint Materials: AASHTO M-33, ½" bituminous type preformed joint filler.

2.5 CONCRETE MIX - BY PERFORMANCE CRITERIA

A. Mix concrete in accordance with ACI 304. Deliver concrete in accordance with ASTM C94.

B. Select proportions for normal weight concrete in accordance with ACI 301 Method 3.

C. Provide concrete for sidewalk to the following criteria:
1. Compressive Strength: 3,000 psi @ 28 days.
2. Slump: 3 inches.
3. Air Entrained: 5-8 percent

Provide concrete for bus lane pavement to the following criteria:

1. Compressive Strength: 4,400 psi @ 28 days.
2. Slump: 4 inches.
3. Flexural Strength of 680 psi
4. Air Entrained: 5% +/- 1 percent air
5. Provide Class P concrete design.

D. Use accelerating admixtures in cold weather only when approved by Engineer. Use of admixtures will not relax cold weather placement requirements.

E. Use calcium chloride only when approved by Engineer.

F. Use set retarding admixtures during hot weather only when approved by Engineer.

2.6 SOURCE QUALITY CONTROL AND TESTS

A. Provide mix design for concrete.

B. Submit proposed mix design to the Engineer for review and approval prior to commencement of work.

C. Tests on cement and aggregates will be performed to ensure conformance with specified requirements.

D. Test samples in accordance with ACI 301.

PART 3 EXECUTION

3.1 INSTALLATION

A. Verify compacted subgrade is acceptable and ready to support paving and imposed loads.

B. Verify gradients and elevations of base are correct.

3.2 SUBBASE

A. Section 02720 – Aggregate Base Course forms the base construction for work of this Section.

B. Replace defective work if patching is not acceptable to Contracting Officer.

3.3 PREPARATION

A. Moisten base to minimize absorption of water from fresh concrete.

B. Notify Engineer minimum twenty-four (24) hours prior to commencement of concreting operations.

3.4 FORMING

A. Place and secure forms to correct location, dimension, profile, and gradient.

B. Assemble formwork to permit easy stripping and dismantling without damaging concrete.

C. Place joint filler vertical in position, in straight lines. Secure to formwork during concrete placement.

3.5. REINFORCEMENT

A. Interrupt reinforcement at expansion joints.

B. Place dowels and reinforcement to achieve pavement and curb alignment as detailed.

C. Provide doweled joints on center at transverse joints and interruptions of concrete.

D. Provide diamond shaped dowels at construction joints.

3.6 PLACING CONCRETE

A. Place concrete by methods that prevent segregation of mix.

B. Consolidate concrete along face of forms and adjacent to transverse joints with internal vibrator.

C. Keep vibrator away from joint assemblies, reinforcement, or side forms.

D. Use only square-faced shovels for hand spreading and consolidation.

E. Consolidate with care to prevent dislocation of reinforcing, dowels and joint devices.

F. Use bonding agent at locations where fresh concrete is placed against hardened or partially hardened concrete surfaces.

G. Ensure reinforcement, inserts, embedded parts, formed joints are not disturbed during concrete placement.

H. Place concrete continuously over the full width of the panel and between predetermined construction joints.

I. Place concrete to pattern indicated.

J. Deposit and spread concrete in a continuous operation between transverse joints as far as possible.

K. If interrupted for more than ½ hour, place a construction joint.

3.7 JOINTS

A. Expansion Joints
   1. Place expansion joints at twenty (20) foot intervals. Align curb, gutter, and sidewalk joints.
   2. Place joint filler between paving components and building or other appurtenances. Recess top of filler ¼ inch for sealant placement.
   3. Provide scored joints at five (5) feet intervals between sidewalks.
   4. Provide keyed joints as indicated.
   5. Provide premolded joint filler for expansion joints abutting concrete curbs,

structures, walks and other fixed objects, unless otherwise indicated.

6. Furnish joint fillers in one piece lengths for full width being placed wherever possible. When more than one length is required, or clip joint filler sections together.
7. Protect top edge of joint filler during concrete placement with a metal cap or other temporary materials.
8. Remove protection after concrete has been placed on both sides of joint.

B. Construction Joints

1. Place construction joints at end of placements and at locations where placement operations are stopped for more than ½ hour.
2. Where load transfer-slip dowel devices are used, intall so that one end of each dowel bar is free to move.

C. Fillers and Sealants

1. Where joints in concrete construction are shown to be sealed, the joint sealing compound shall be a cold-applied two-component poly-sulfide sealant.
2. The handling, mixing, and placing of the material and preparation of the joint prior to sealing shall be in strict accordance with the recommendations of the manufacturer.
3. A two component epoxy primer compatible with the sealer shall be used in all joints.
4. Provide joint sealers and other related materials that are compatible with one another and with joint substrates.

3.8 FINISHING

A. Area Paving: Light broom.

B. Sidewalk Paving: Light broom, radius to ½ inch radius, and trowel joint edges.

C. Curbs and Gutters: Light broom.

D. Direction of Texturing: Transverse to pavement direction.

E. Inclined Vehicular Ramps: Broomed perpendicular to slope.

F. Place curing compound on exposed concrete surfaces immediately after finishing. Apply in accordance with manufacturer's instructions.

3.9 CURING AND PROTECTION

A. Immediately after placement, protect concrete from premature drying, excessively hot or cold temperatures, and mechanical injury.

B. Maintain concrete with minimal moisture loss at relatively constant temperature for period necessary for hydration of cement and hardening of concrete.

C. Cure floor surfaces in accordance with ACI 308.

D. Ponding: Maintain 100 percent coverage of water over slab areas continuously for four (4) days.

E. Spraying: Spray water over floor slab areas and maintain wet for seven (7) days.

3.10 TOLERANCES

A. Maximum Variation of Surface Flatness: ¼ inch in ten (10) ft.

B. Maximum Variation from True Position: 1/4 inch.

3.11 PATCHING

A. Allow Engineer to inspect concrete surfaces immediately upon removal of forms.

B. Excessive honeycomb or embedded debris in concrete is not acceptable. Notify Engineer upon discovery.

C. Patch imperfections as directed.

3.12 DEFECTIVE CONCRETE

A. Defective Concrete: Concrete not conforming to required lines, details, dimensions, tolerances or specified requirements.

B. Repair method or replacement of defective concrete will be determined by the Engineer.

C. Do not patch, fill, touch-up, repair, or replace exposed concrete except upon express direction of Engineer for each individual area.

3.13 FIELD QUALITY CONTROL

A. Three concrete test cylinders will be taken for every seventy-five (75) or less cubic yards of concrete placed each day.

B. One additional test cylinder will be taken during cold weather and cured on site under same conditions as concrete it represents.

C. One slump test will be taken for each set of test cylinders taken.

D. Maintain records of placed concrete items. Record date, location of pour, quantity, air temperature, and test samples taken.

3.14 PROTECTION

A. Immediately after placement, protect pavement from premature drying, excessive hot or cold temperatures, and mechanical injury.

B. Do not permit pedestrian and vehicular traffic over pavement until seventy-five (75) percent design strength of concrete has been achieved.

END OF SECTION

SECTION 02831
CHAIN LINK FENCES, WROUGHT IRON FENCES AND GATES

PART 1 – GENERAL

1.1 SECTION INCLUDES

A. Fence and Gate framework, fabric, and accessories.

B. Excavation for post bases.

C. Manual gates and related hardware.

1.2 REFERENCES

A. ASTM A120 - Pipe, Steel, Black and Hot-Dipped Zinc-Coated (Galvanized) Welded and Seamless, for Ordinary Uses.

B. ASTM A121 - Zinc-Coated (Galvanized) Steel Barbed Wire.

C. ASTM A123 - Zinc (Hot Dip Galvanized) Coatings on Iron and Steel Products.

D. ASTM A153 - Zinc Coating (Hot-Dip) on Iron and Steel Hardware.

E. ASTM A392 - Zinc-Coated Steel Chain-Link Fence Fabric.

F. ASTM F567 - Installation of Chain-Link Fence.

G. ASTM F669 - Strength Requirements of Metal Posts and Rails for Industrial Chain Link Fence.

H. ASTM F1234 - Protective Coatings on Steel Framework for Fences.

I. Chain Link Fence Manufacturers Institute (CLFMI) - Product Manual.

J. FS RR-F-191 - Fencing, Wire and Post Metal (and Gates, Chain Link Fence Fabric, and Accessories).

1.3 SYSTEM DESCRIPTION

A. Fence Height: As indicated on Drawings or match existing chain link or wrought iron fence height.

B. Line Post Spacing: At intervals not exceeding 10 feet.

C. Fence Post and Rail Strength: Conform to ASTM F669 Light Industrial Fence quality.

1.4 SUBMITTALS FOR REVIEW

A. Section 01300 - Submittals: Procedures for submittals.

B. Product Data: Provide data on fabric, posts, accessories, fittings and hardware.

C. Shop Drawings: Indicate plan layout, spacing of components, post foundation dimensions, hardware anchorage, and schedule of components.

1.5 SUBMITTALS FOR REVIEW

A. Section 01300 - Submittals: Procedures for submittals.

B. Manufacturer's Installation Instructions: Indicate installation requirements, post foundation and anchor bolt templates.

1.6 SUBMITTALS FOR CLOSEOUT

A. Section 01700 - Contract Closeout

B. 01740 - Warranties and Bonds.

C. Project Record Documents: Accurately record actual locations of property perimeter posts relative to building structures.

1.7 QUALITY ASSURANCE

A. Perform Work in accordance with ASTM F567.

1.8 QUALIFICATIONS

A. Manufacturer: Company specializing in manufacturing the products specified in this section with minimum three years documented experience.

PART 2 – PRODUCTS

2.2 MATERIALS

A. Framing (Steel): ASTM F120 Schedule 40 galvanized steel pipe, welded construction, minimum yield strength of 25 ksi; coating conforming to ASTM F1234 Type A on pipe exterior and interior.

B. Fabric Wire (Steel): ASTM A392 zinc coated wire fabric.

C. Concrete: Type specified in Section 02520.

2.3 COMPONENTS

A. Line Posts: 2.38 inch diameter.

B. Corner and Terminal Posts: 2.88 inch diameter.

C. Top and Brace Rail: 1.66 inch diameter, plain end, sleeve coupled.

D. Fabric: 2 inch diamond mesh interwoven wire, 9 gage thick, top and bottom salvage twisted tight.

E. Tension Wire: 7 gage thick steel, single strand.

F. Tie Wire: Aluminum alloy steel wire.

G. Gate Posts: 4.50 inch diameter.

H. Gate Frame: 1.66 inch diameter for fittings and truss rod fabrication.

2.4 ACCESSORIES

A. Caps: Cast steel galvanized; sized to post diameter, set screw retainer.

B. Fittings: Sleeves, bands, clips, rail ends, tension bars, fasteners and fittings.

C. Gate Hardware: Center gate stop and drop rod; two 180 degree gate hinges per leaf and hardware for padlock. (Center gate stop and drop only applies to double gates; other features apply to all gates).

2.5 FINISHES

A. Components and Fabric: Galvanized to ASTM A123; 1.8 oz/sq ft coating.

B. Posts: Hot-dipped zinc coated with 1.8 oz/sq ft of external coated surface; the interior surface shall not be hot-dipped zinc coated or zinc rich painted to a minimum thickness of 0.3 mils.

C. Hardware: Galvanized to ASTM A153, Class C or D.

D. Accessories: Same finish as posts.

PART 3 – EXECUTION

3.1 INSTALLATION

A. Install framework, fabric, and accessories and gates in accordance with manufacturer's instructions.

B. Set intermediate, gate and terminal posts plumb, in concrete footings with top of footing 2 inches above finish grade. Slope top of concrete for water runoff.

C. Brace each gate and corner post to adjacent line post with horizontal center brace rail and diagonal truss rods. Install brace rail one bay from end and gate posts.

D. Provide top rail through line post tops and splice with 6 inch long rail sleeves.

E. Install center and bottom brace rail on corner gate leaves.

F. Do not stretch fabric until concrete foundation has cured 72 hours.

G. Stretch fabric between terminal posts or at intervals of 100 feet maximum, whichever is less.

H. Position bottom of fabric 2 inches above finished grade.

I. Fasten fabric to top rail, line posts, braces, and bottom tension wire with tie wire at maximum 15 inches on centers.

J. Attach fabric to end, corner, and gate posts with tension bars and tension bar clips.

K. Install bottom tension wire stretched taut between terminal posts.

L. Install support arms sloped outward and attach barbed wire; tension and secure.

M. Do not attach the hinged side of gate from building wall; provide gate posts.

N. Install gate with fabric to match fence. Install three hinges per leaf, latch, catches, drop bolt, foot bolts and sockets, torsion spring retainer and retainer and locking clamp.

O. Provide concrete center drop to footing depth and drop rod retainers at center of double gate openings.

P. Install gate with fabric to match fence. Install three hinges per leaf, latch, catches, retainer and locking clamp.

Q. If fence height exceeds 8 feet, then additional brace rail shall be installed at the bottom of the fence with a truss rod across the upper half of the fence to the middle brace rail. See drawings.

3.2 ERECTION TOLERANCES

A. Maximum Variation From Plumb: 1/4 inch.

B. Maximum Offset From True Position: 1 inch.

C. Components shall not infringe adjacent property lines.

END OF SECTION

SECTION 31 6329

DRILLED PIERS AND SHAFTS

PART 1 - GENERAL

1.01 SUMMARY:

A. The extent of work consists of furnishing all plant, equipment, labor and materials required for the drilling of drilled pier foundations, fabrication and placing of reinforcing, and placement of concrete into drilled pier excavations. Extent of work is shown on the drawings including locations and depths, diameter of shafts, and top elevation of drilled piers and details of construction.

1.02 RELATED DOCUMENTS

A. Drawings and general provisions of Contract, including General and Supplementary Conditions and Division 1 Specification Sections, apply to work of this Section.

B. The work included in this Section is referenced and related to work covered by the following Sections:

1. Section 03 3000 – Cast-In-Place Concrete

1.03 REFERENCES

A. This section contains references to the following documents. They are a part of this section as specified and modified. In case of conflict between the requirements of this section and those of the listed documents, the requirements of this section shall prevail. The publications are referred to in the text by basic designation only.

B. Unless otherwise specified, references to documents shall mean the documents in effect at the time of Advertisement for Bids or Invitation to Bid. If referenced documents have been discontinued by the issuing organization, references to those documents shall mean the replacement documents issued or otherwise identified by that organization or, if there are no replacement documents, the last version of the document before it was discontinued. Where document dates are given in the following listing, references to those documents shall mean the specific document version associated with that date, whether or not the document has been superseded by a version with a later date, discontinued or replaced.

C. American Concrete Institute
1. ACI 336.1 – Standard Specification for the Construction of Drilled Piers.

D. American Society for Testing and Materials (ASTM)
1. ASTM A 615/A 615M – Specification For Deformed and Plain Billet-Steel Bars for Concrete Reinforcement
2. ASTM C 94 – Specification for Ready-Mixed Concrete
3. ASTM C 494 – Specification for Chemical Admixtures for Concrete
4. ASTM C 1017 – Specification for Chemical Admixtures for Use in Producing Flowing Concrete
5. ASTM D 4380 – Test Method for Density of Bentonitic Slurries
6. ASTM D 4381 Test Method for Sand Content by Volume of Bentonitic Slurries

E. Concrete Reinforcing Steel Institute (CRSI)

1. CRSI MSP-1 – Manual of Standard Practice

F. American Welding Society (AWS)
1. AWS-D1.1 – Structural Welding Code – Steel

1.04 SUBMITTALS

A. General: Submit the following in accordance with Conditions of Contract and Division/Specification Sections.

B. Reports: Submit following reports directly to the Architect, with copy to others as designated.
1. Experience record of driller's supervisory personnel.
2. List of equipment and procedures.
3. Shop drawings showing placement of reinforcing steel.
4. Detailed procedures for pier construction, including casing withdrawal if required.
5. Quality control program.
6. AWS welder certifications.
7. Concrete Materials Test Reports as proposed for use in concrete mixes.
8. Concrete Design Mix Reports, listing mixes required and their respective test results.
9. Concrete Test Reports, recording pertinent information and certification of compliance with project requirements.
10. Test report from the slurry supplier giving the slurry type and admixtures and the physical and chemical properties of the mixed slurry to the Architect and Geotechnical Engineer
11. Certified Drilled Pier Report for each Drilled Pier selected by the Engineer, recording actual elevation at bottom and top, final centerline location at top, variation of shaft from plumb, result of tests performed, actual allowable bearing capacity of bottom, diameter of shaft, elevation of bottom and top of any casing left in place, any unusual conditions, variation of dimensions from original design, dates of starting excavation, completion of excavation, inspection, testing, and placement of concrete (include any delays in concreting and location of construction joints in drilled shafts), concrete slump test results and other information as may be required by the Architect.
12. If slurry is used provide "down-hole slurry test results", including reports of slurry during construction in accordance with ACI 336.1 Part 3.7, "Slurry Displacement Method".

1.05 QUALITY ASSURANCE

A. Drilled Pier Installation Specialist Qualifications: Not less than three successfully completed contracts with similar soil conditions, shaft sizes, depths and volumes of work contained in this project. Information concerning the qualifications of the foundation subcontractor to be used on this project shall be submitted within two weeks of notice of award of contract. Information submitted should include, but not be limited to, names and details of similar projects recently completed, experience profile of current employees, a list of equipment currently in inventory, and references (Owners, Engineers, Architects and Contractors) involved with the subcontractor in recently completed projects. In addition, include with the bid documents, the methodology regarding foundation pier construction, addressing typical pier construction and pier construction under unusual conditions, including provisions for steel casing.

B. Failure to submit the Drilled Pier Installation Specialist Qualifications as required above, will be the basis for rejection of the proposed Drilling Installation Specialist proposed by the Contractor. The evaluation of the submittal and the acceptance or rejection of the

proposed Pier Installation Specialist shall be at the sole discretion of the Architect. If the proposed Pier Installation Specialist is rejected, the Contractor shall submit the Qualifications of another proposed specialist within one week of notice of rejection.

C. Basis of Contract: The lump sum contract price shall include the cost of the foundation piers complete, including pier excavation casing, if casing is determined to be required by the contractor.

D. Layout Work: Conduct layout work for each Drilled Pier to lines and levels required before excavation, and actual measurements of each Drilled Pier's horizontal axial location, shaft diameter, bottom and top elevations, deviations from specified tolerances, and other data as required. Location of the drilled pier shall be reviewed by the Architect prior to drilling.
   1. Record and maintain information pertinent to each Drilled Pier and cooperate with other testing and inspection personnel to provide data for required reports.

E. Concrete Testing Service: Employ a testing laboratory to perform material evaluation tests and to design concrete mixes.

F. The Owner will employ a separate testing laboratory to perform field quality control tests.
   1. Materials and installed work may require testing and retesting at any time during progress of work. Allow free access to material stockpiles and facilities. Tests, not specifically indicated to be done at the Owner's expense, including retesting or rejected materials and installed work, will be Contractor's responsibility.
   2. Certificates of material properties and compliance with specified requirements may be submitted in lieu of testing, when acceptable to the Architect. Certificates of compliance must be signed by materials producer and Contractor.

1.06 PROJECT CONDITIONS

A. Site Information: Data on indicated subsurface conditions as described in the subsurface investigation reports was used for the basis of the design and are available at the offices of the Engineer and are not intended as representations or warranties of continuity of such conditions. It is expressly understood that the Owner will not be responsible for interpretations or conclusions drawn there from by Contractor. Data are made available for convenience of Contractor and are not guaranteed to represent conditions that may or may not be encountered.

B. A copy of the soils report for the project with information on the borings will be available to the Contractor at the Architect’s office. Use of the information in the soils report shall be at the discretion of the Contractor and the Owner assumes no responsibility for the information contained therein.

C. Additional test borings and other exploratory operations may be made by Contractor at no additional cost to the Owner.

D. Existing Utilities: Locate existing underground utilities by careful hand excavation before starting Drilled Pier excavation operations. If utilities are to remain in place, provide protection from damage, during Drilled Pier operations.

E. Should uncharted or incorrectly charted piping or other utilities be encountered during excavation, consult the Architect immediately for directions as to procedure. Cooperate with the Owner and Utility companies in keeping services and facilities in operation. Repair damaged utilities to the satisfaction of the utility.

F. Do not interrupt existing utilities serving facilities occupied and used by the Owner or others, except when permitted in writing by the Engineer and after acceptable temporary utility services have been provided.

G. Provide minimum of 48 hours notice to the Architect, and receive written notice to proceed before interrupting any utility.

H. Protection of Persons on Property: Barricade open excavations occurring as part of this work and post with warning lights subject to the review and approval of the Owner.

I. The Contractor shall remain fully responsible for any damages caused to adjacent buildings, structures, walls, fences, or other existing construction during the drilling operations.

PART 2 - PRODUCTS

2.01 CONCRETE AND RELATED MATERIALS

A. Concrete and related materials are specified in Division-3 sections.

B. Portland Cement: ASTM C 150, Type I or Type II, as required.

C. Aggregates: ASTM C 33, and as herein specified.

D. Local aggregates not complying with ASTM C 33, but which have been shown by test and actual service to produce concrete of adequate strength and durability, may be used when acceptable to the Architect.

E. Maximum Aggregate Size: Not larger than three-fourths of minimum clear spacing between individual reinforcing bars and as scheduled in Section 03 3000 Cast-In-Place Concrete For Structures.

F. Water: Clean, potable.

G. Air-Entraining Admixture: ASTM C 260.

H. Water-Reducing Admixture: ASTM C 494, Type A, containing no set-accelerating or set-retarding compounds, chlorides, or nitrates.

I. Reinforcing Bars and Dowels: ASTM A 615, Grade 60.

J. Weldable Bars and Dowels: ASTM A 706. Grade 60.

2.02 CONCRETE MIX DESIGN

A. General: Use an independent testing facility for preparing and reporting proposed mix designs. Testing facility shall not be the same as used for field quality control testing.

B. Design mix to produce concrete for Drilled Piers with minimum 28-day compressive strength of 3000 psi.

C. Proportion mixes by either laboratory trial batch or field experience methods, using materials to be employed on project for each class of concrete required, complying with ACI 211.1.

D. Submit written reports to the Architect of proposed mix for concrete at least 15 days prior to start of work. Do not begin concrete production until mix design has been reviewed by the Architect.

D. Adjustment to Concrete Mixes. Mix design adjustments may be requested to perform by the Contractor when characteristics of materials, job conditions, weather, test results, or other circumstances warrant; at no additional cost to the Owner and as accepted by the Engineer. Laboratory test data for revised mix designs and strength results must be accepted by the Architect before being used in work.

F. Admixtures: Use air-entraining admixture in concrete, unless otherwise directed. Add air-entraining admixture at manufacturer's prescribed rate to result in concrete at point of placement having 4% to 6% air content.

G. Use water-reducing admixtures in strict compliance with manufacturer's directions. Admixtures to increase cement dispersion, or provide increased workability for low-slump concrete, may be used at Contractor's option.

H. Use amounts of admixtures as recommended by manufacturer for climatic conditions prevailing at time of placing concrete. Adjust quantities of admixtures as required to maintain quality control.

I. Slump Limits: Proportion and design mixes to result in concrete slump at point of placement of not less than 4" and not more than 6".

2.03 CONCRETE MIXING

A. Ready-Mix Concrete: Comply with requirements of ASTM C 94, and as herein specified.

B. Delete references for allowing additional water to be added to batch for material with insufficient slump. Addition of water to batch will not be permitted.

C. During hot weather, or under conditions contributing to rapid setting of concrete, a shorter mixing time than specified in ASTM C 94 may be required.

D. When air temperature is between 85 deg F (30 deg C) and 90 deg F (32 deg C), reduce mixing and delivery time from 1-1/2 hours to 75 minutes, and when air temperature is above 90 deg F (32 deg C), reduce mixing and delivery time to 60 minutes. In no case shall the temperature of the concrete exceed 90 deg F (32 deg C).

2.04 SLURRY DISPLACEMENT METHOD

A. If slurry displacement method is allowed by the Architect and Geotechnical Engineer, use slurry consisting of a stable colloidal suspension of various pulverized clays or polymers thoroughly mixed with water and complying with the properties listed in ACI 336.1, Table 2.6 – Required Slurry Properties.

2.05 STEEL CASING

A. Steel Pipe Casings: ASTM A 252, Grade 2, or ASTM A 36.

B. Corrugated Steel Casings: ASTM A 444.

PART 3 - EXECUTION

3.01 DRILLED PIER EXCAVATION

A. General: Excavate holes for Drilled Piers to required bearing strata or elevation as shown on drawings. Prior to placing piers, the Geotechnical Engineer shall inspect the pier excavation and complete the written report required by these specifications.

B. The Contractor shall perform the excavation required for the pier shaft through whatever materials encountered, to the dimensions and elevations shown on the plans or as required by the site conditions.
   1. Provide straight shaft drilled piers of the diameter indicated.

C. Method of Construction: In general, foundation pier excavations may be made by any method, including the use of slurry for sidewall stabilization.
   1. In accordance with the Soil Investigation Report, temporary steel casing may be required for pier excavation through gravelly sand soil. Casing may extend partially or fully into the excavation, depending on conditions encountered at time of construction.
   2. The bottom of all straight shaft drilled piers to be level, firm and free of any loose materials, and casings shall be used to prevent cave-ins, and to provide a safe working space. Casing shall be metal of ample strength to withstand handling stresses, the pressure of concrete and of the surrounding earth or backfill materials. The outside diameter of casing shall not be less than the specified size of shaft; otherwise, the size of casing and the size of drilled excavation in which it is to be placed will be left to the discretion of the Contractor, except as noted below. No extra compensation will be allowed for concrete required to fill an oversize casing or oversize excavation. The requirements for casing size, design, fabrication, installation, withdrawal and safety shall be the responsibility of the Contractor. No additional payment shall be made for the use of casing whether removed or left in place.
   3. Should foundation excavation or drilling for any pier become impractical to complete by one method, an alternate excavation procedure shall be implemented. A change in method shall not constitute a basis for a claim against the Owner for increased compensation or extension of the contract completion date.

D. The elevation of the bottom of all straight shaft drilled piers shall be as noted on the drawings, or at such depths as may be directed by the Geotechnical Engineer. This information will be used as a basis for the contract. If satisfactory material is not encountered at plan elevation, bottom of pier may be raised or lowered as determined by the Geotechnical Engineer. Alteration of plan depth shall be made to satisfactorily comply with the design requirements.

E. Control: Excavate or drill foundation piers with minimal disturbance to the surrounding soil. Use steel casing or other methods such as slurry methods throughout, as may be deemed necessary by the Contractor for installation of piers to control disturbance to surrounding soil.
   1. Install casings at drilled piers as required, as excavation proceeds so that earth walls are maintained without spilling into shaft. Past drilling experience at the site indicates that casing will be required. The Contractor shall include and shall utilize casing or other methods such as slurry methods, during the pier drilling operations and each pier. Casing shall extend the full depth of the drilled pier excavation regardless of the final depths if different than shown on the Contract Documents.

F. Construction Tolerances: Locate centerline of Drilled Piers within the following tolerances:
   1. Maximum permissible variation of location not more than 1/24th of shaft diameter or 3", whichever is less.
   2. Shafts out of plumb, not more than 1.5% of length nor exceeding 12.5% of shaft diameter of 15", whichever is less. Concrete cut-off elevation, plus 1" to minus 3".
   3. If above tolerances are exceeded, provide corrective construction to compensate

for excessive eccentricity. Submit proposed corrective construction methods to the Architect for review before proceeding.

G. Temporary Shaft Protections: When required, provide full-length watertight steel casings of sufficient thickness to withstand compressive, lateral pressure, displacement and withdrawal stresses and to maintain shaft walls. Temporary casings may be left in place or may be withdrawn as concrete is placed, at Contractor's option. Temporary casing may be installed using method selected by the Contractor.

H. Bracing and shoring of Drilled Pier Excavations:
1. Provide and maintain equipment to keep excavations from caving in and free of loose soils materials before placing concrete.
2. Maintain maximum safety and protection in all drill pier excavations for workmen, equipment and completed construction.
3. If excessive caving-in of soil materials is encountered and drilling operations must be halted, notify the Architect before using alternate methods of construction.

I. Dewatering: Conduct water to general site run-off ditches and disposal areas with discharge lines. Provide ditching as required to conduct water to site drainage facilities.

J. Inspection: Each Drilled Pier shall be inspected before placing concrete.
1. Provide facilities as required to assist inspection and testing of excavations, and cooperate with inspecting and testing personnel to expedite work.
2. Notify the Architect and testing facility at least 8 hours prior to time excavations will be ready for inspection and tests.

K. Depth of Bearing Strata: If indicated depth of straight shaft drilled pier excavation is reached without reaching required strata, in the opinion of the Geotechnical Engineer, immediately suspend excavation operations and inform the Architect. The Architect and the Geotechnical Engineer will determine procedures to be followed.
1. Where changes in indicated depth or dimensions are required, proceed with such work when directed in writing by the Architect.

L. Over excavation: No payment will be made for extra length, when Drilled Pier shafts are excavated to a greater depth than required or authorized by the Architect, due to over drilling by Contractor. Complete Drilled Pier and fill extra depth with concrete as specified, if other conditions are satisfactory. The authorized over excavated shafts will be measured and paid for the original design and/or authorized depth.
1. The outside diameter of temporary casing if required shall not be less than the specified size of shaft; otherwise, the size of casing and the size of drilled shaft excavation in which it is to be placed will be left to the discretion of the Contractor, except as noted below. No extra compensation will be allowed for concrete required to fill an oversize casing or oversize excavation. The requirements for temporary casing shall be at the expense and the responsibility of the Contractor.

M. Equipment used shall be the type especially designed for drilling piers and shall drill true and plumb shafts of accurate cross-section. The center of the drilled pier shall be in accordance with the paragraph [3.01 F] Construction Tolerances herein. The foundation contractor shall provide suitable auxiliary equipment (such as witness stakes and plumb bob) during pier foundation excavation to assist the Geotechnical Engineer or his representative in evaluating pier alignment and plumbness.

N. Where caving conditions are encountered, no further drilling will be allowed until a construction method is employed which will prevent excessive caving that will make the excavation appreciably larger than the size of casing to be used. All loose material shall

be removed from the bottom of the excavation prior to placing concrete.

O. If slurry displacement method is proposed and accepted by the Architect and Geotechnical Engineer the Contractor is to follow the procedures specified in ACI 336.1, Part 3.7 – Slurry Displacement Method.

P. Out of Limits: When any foundation pier exceeds the tolerance specified in above paragraph, the Engineer shall make the loading analysis to determine whether or not the foundation pier design must be modified, and shall prepare design modifications (including any modification of the pier shaft or requirements for reinforcement); all costs thereof shall be deducted from payments otherwise due the Contractor. In addition, the Contractor shall provide specified materials and perform the work required in connection with the design modification at no additional cost to the Owner. The contract completion date will not be extended for any delay incurred by the Contractor, as a result of exceeding the specified tolerance, other than unreasonable delay by the Owner in making a loading analysis or furnishing design modifications.

Q. Approval in Writing: The Geotechnical Engineer or his representative shall be present at the site during pier construction to observe foundation excavation operations and insure that foundation construction is in accordance with the recommendations presented in the geotechnical report and the project plans and specifications. The Geotechnical Engineer or his representative shall inspect all drilled piers after drilling and cleaning by the Contractor. After placement of reinforcing in the drilled pier shaft an additional inspection shall be performed. Do not place concrete in foundation piers until all of the conditions have been inspected and approved in writing by the Architect.
   1. Provide suitable hoist, lighting, ventilation and other suitable equipment to facilitate inspection, subject to the approval of the Architect.

R. No reinforcement or concrete shall be placed unless authorized by the Architect. However, unless approved otherwise by the Architect, all foundation excavation shall have the pier concrete placed on the same day as that on which the drilling is made, such placing of concrete to bring top of piers to required elevation in one continuous operation. See B. Construction Joint under 3.03 Concrete Placement, for requirements should it be necessary to stop continuous concrete placement.

S. Sufficient lengths of steel of the sizes required for lap with pier steel shall be maintained on the site in the event the excavation must extend beyond the scheduled depths. Splice bars may be used if the proper lap length is provided both into the shaft and into the pier cap.

T. Drilled Pier Construction Procedures: See paragraph, Method of Construction, above for excavation of foundation piers. Consider and incorporate possible contingencies in order to construct foundation piers with unimpaired structural integrity and with dimensions not less than shown.
   1. The Contractor will be responsible to determine if additional safety casing beyond the casing requirements described above, is required and to provide a safe working condition during the drilling and concrete placing operations and during the inspection by the Owner.

U. Excavated Material: Use acceptable material, only, on the project site or remove and legally dispose off site.

3.02 REINFORCING STEEL AND DOWELS

A. Before placing, clean reinforcing steel and dowels of loose rust, scale, dirt, grease and other material, which could reduce or destroy bond.

B. Fabricate and erect reinforcing cages in shafts as one continuous unit using vertical reinforcing, ties and auxiliary reinforcing as necessary. Place reinforcement accurately and symmetrically about axis of hole and hold securely in position during concrete placement.

C. Use templates to set anchor bolts, leveling plates, dowels and other accessories furnished under work of other sections. Provide blocking and holding devices to maintain required position during concrete placement.

D. Protect exposed ends of extended reinforcing, dowels, or anchor bolts from mechanical damage and exposure to weather.

3.03 CONCRETE PLACEMENT

A. General: Fill drilled piers shaft with concrete immediately after inspection and approval by testing laboratory. Use protection sheets (cut out to receive concrete) over excavation openings, extending at least 12" beyond edge. Place concrete continuously and in a smooth flow without segregating. Provide mechanical vibration for consolidation of at least top 25' of each shaft.

B. Construction Joint: Should it become necessary to stop the placing of the concrete in any foundation pier, the concrete placed shall be bought to a true level surface inside the shaft. Provide, 2 by 8 inch keys full width of the shaft, forming a cross.

C. Before additional concrete is placed, clean the hardened concrete and reinforcing bars surfaces of all laitance, and slush surfaces with grout consisting of portland cement and fine aggregate in equal parts by volume. Reinforcing steel bars shall be full length or shall extend a sufficient distance above the construction joint for a 72 bar diameter lap splice. Where required, provide splice bars that will lap 72 bar diameters with the bars spliced below and above the splice elevation.

D. Place concrete by means of a bottom discharge bucket, flexible drop chute, elephant trunk hopper, or tremie. Use chutes or tremies for placing concrete where the height of drop of the concrete will permit segregation, or pump concrete into place. Place concrete in a manner to require that the foundation piers will be uniform and monolithic without foreign rock, soil or honeycombed areas.

E. Place concrete in-the-dry unless placing underwater is acceptable to the Engineer. If water occurs, and it is impracticable to dewater Drilled Pier excavation, and reasonable attempts to seal off water flow have failed, allow water level to attain its normal level and place concrete by tremie method. Control placement operations to ensure that tremie is not broken during continuous placing from bottom to top. Other methods of depositing concrete underwater may be used, if acceptable to the Architect.

F. Maintain a sufficient head of concrete to prevent reduction in diameter of drilled pier shaft by earth pressure and to prevent extraneous material from mixing with fresh concrete. Coordinate withdrawal of temporary casings with concrete placement operations to maintain a head of concrete approximately 5' above casing bottom. In no case will contamination by water or soil of the concrete be permitted.

G. Stop concrete placement at cut-off elevation shown, screed level, and apply a scoured, rough finish. Where cut-off elevation is above ground elevation, form top section above grade and extend shaft to required elevation.

H. Interrupted placing operations of over one hour duration will require a construction joint installation.

I. Under normal operations, the removal of the casing shall not be started, until all concrete

placement is completed in the bottom of the pier and is up a minimum of two feet into the shaft. Movement of the casing for short pulls of a few inches, rotating, exerting downward pressure and tapping it to facilitate extraction will be permitted as concrete placement continues in the shaft. At no time will the bottom of the casing be allowed to be pulled above the level of the concrete. When unusual conditions warrant, the casing may be pulled in partial stages. Casing extraction shall be at a slow, uniform rate with the pull in line with the center of the shaft.

J. Run Off and Seepage: Keep the foundation pier excavation free of surface or ground water at all times. Use steel casing or other suitable means to prevent erosion where seepage occurs from sides of shaft excavation or where unstable soils are encountered. The means employed to prevent erosion shall be at no additional expense to the Owner.

K. Should ground water seepage occur at the exposed bottom of the pier excavation, it may be necessary to utilize a tremie to place concrete within the foundation excavation. The tremie shall extend the full length of the pier excavation, and be designed in such a manner to allow concrete placement within the shaft, which displaces the ground water in an upward manner without contamination of the concrete. In no case will contamination by water or soil of the concrete be permitted.

L. Cold Weather Placing: Protect concrete work from physical damage or reduced strength which could be caused by frost, freezing actions, or low temperatures, in compliance with ACI 306 and as herein specified.
   1. When air temperature has fallen to or is expected to fall below 40 deg F (4 deg C), uniformly heat water and aggregates before mixing to obtain a concrete mixture temperature of not less than 50 deg F (10 deg C), and not more than 80 deg F (27 deg C) at point of placement.

M. Do not use frozen materials or materials containing ice or snow. Do not place concrete on frozen subgrade or on subgrade containing frozen materials.

N. Do not use calcium chloride, salt and other mineral containing anti-freeze agents or chemical accelerators.

O. Hot Weather Placing: When hot weather conditions exist that would seriously impair quality and strength of concrete, place concrete in compliance with ACI 305 and as herein specified.
   1. Cool ingredients before mixing to maintain concrete temperature at time of placement below 90 deg F (32 deg C). Mixing water may be chilled, or chopped ice may be used to control concrete temperature provided water equivalent of ice is calculated to total amount of mixing water. Cooling concrete mixture by use of liquid nitrogen may be used if acceptable to the Architect.
   2. Place concrete immediately upon delivery. Keep exposed concrete surfaces, and formed shaft extensions, moist by fog sprays, wet burlap or other effective means.
   3. Do not use retarding admixtures without acceptance of the Architect.

3.04 FIELD QUALITY CONTROL

A. Quality Control Testing During Construction: Sample and test concrete for quality control during placement, as follows:

B. Sampling Fresh Concrete: ASTM C 172, except modified for slump to comply with ASTM C 94.

C. Slump: ASTM C 143; one test for each concrete load at point of discharge; and one for each set of compressive strength test specimens.

D. Air Content: ASTM C 231, pressure method; one for each set of compressive strength test specimens.

E. Compression Test Specimens: ASTM C 31; one set of 4 standard cylinders for each compressive strength test, unless otherwise directed. Mold and store cylinders for laboratory cured test specimens except when field-cure test specimens are required.

F. Concrete Temperature: Test when air temperature is 40 deg F (4 deg C) below, and when 80 deg F (27 deg C) and above; and each time a set of compression test specimens made.

G. Compressive Strength Tests: ASTM C 39; one set of four cylinders per drilled pier but not more than one set per truck. One specimen tested at 7 days, 2 specimens tested at 28 days, and one specimen retained in reserve for later testing if required.
   1. When strength of field-cured cylinders is less than 85% of companion laboratory-cured cylinders, evaluate current operations and provide corrective procedures for protecting and curing in-place concrete.
   2. Report test results in writing to the Architect and Contractor on same day tests are made. Include in reports project identification name and number, date of concrete placement, name of contractor, name of concrete supplier and truck number, name of concrete testing service, concrete type, location of Drilled Pier, design compressive strength at 28 days, concrete mix proportions and materials; compressive breaking strength and type of break for both 7-day tests and 28-day tests.

H. Additional Concrete Tests: Testing service may take core samples of in-place concrete when test results are such that there is reasonable doubt specified concrete strengths have not been attained.

I. Complete continuous coring of Drilled Piers may be required, at Contractor's expense, where time for removal of temporary casings exceed specified limits, or where observations of placement operations indicated cause for suspicion of quality of concrete, presence of voids, segregation or other possible defects.

J. Inspection and Tests for Drilled Piers: Soil testing facility shall perform and report specified tests, and additional tests which may be required. Conduct tests and provide reports as soon as possible do not delay concreting operations for acceptable excavations.
   1. Lengths of Drilled Piers as shown on drawings are estimated from available soil data. Final evaluations and acceptance of data and a change in the length of drilled beams, if necessary, will be determined by the Architect.
   2. There will be no additional compensation for excavation, concrete fill, reinforcing, casings, or other costs due to unauthorized over excavating shafts. No payment will be made for rejected Drilled Piers.
   3. Prices quoted include full compensation for labor, materials, tools, equipment, and incidentals required for excavation, trimming, shoring, casings, dewatering, reinforcement, concrete, and other items for complete installation.

END OF SECTION

SECTION 03300

CAST-IN-PLACE CONCRETE

PART 1 - GENERAL

1.1 RELATED DOCUMENTS

A. Drawings and general provisions of the Contract, including General and Supplementary Conditions and Division 01 Specification Sections, apply to this Section.

1.2 SUMMARY

A. This Section specifies cast-in place concrete, including formwork, reinforcement, concrete materials, mixture design, placement procedures, and finishes, for the following:

1. Footings.
2. Foundation walls.
3. Slabs-on-grade.
4. Suspended slabs.
5. Concrete toppings.
6. Building frame members.
7. Building walls.

B. Related Sections include the following:

1. Division 03 Section "Architectural Concrete" for general building applications of specially finished formed concrete.
2. Division 31 Section "Earth Moving" for drainage fill under slabs-on-grade.
3. Division 32 Section "Concrete Paving" for concrete pavement and walks.
4. Division 32 Section "Decorative Concrete Paving" for decorative concrete pavement and walks.

1.3 DEFINITIONS

A. Cementitious Materials: Portland cement alone or in combination with one or more of the following: blended hydraulic cement, fly ash and other pozzolans, ground granulated blast-furnace slag, and silica fume; subject to compliance with requirements.

1.4 SUBMITTALS

A. Product Data: For each type of product indicated.

B. Design Mixtures: For each concrete mixture. Submit alternate design mixtures when characteristics of materials, Project conditions, weather, test results, or other circumstances warrant adjustments.

1. Indicate amounts of mixing water to be withheld for later addition at Project site.

C. Steel Reinforcement Shop Drawings: Placing drawings that detail fabrication, bending, and placement. Include bar sizes, lengths, material, grade, bar schedules, stirrup spacing, bent bar diagrams, bar arrangement, splices and laps, mechanical connections, tie spacing, hoop spacing, and supports for concrete reinforcement.

D. Formwork Shop Drawings: Prepared by or under the supervision of a qualified professional engineer detailing fabrication, assembly, and support of formwork.

1. Shoring and Reshoring: Indicate proposed schedule and sequence of stripping formwork, shoring removal, and installing and removing reshoring.

E. Samples: For waterstops and vapor retarder.

F. Material Test Reports: For the following, from a qualified testing agency, indicating compliance with requirements:

1. Aggregates.

G. Material Certificates: For each of the following, signed by manufacturers:

1. Cementitious materials.
2. Admixtures.
3. Form materials and form-release agents.
4. Steel reinforcement and accessories.
5. Fiber reinforcement.
6. Waterstops.
7. Curing compounds.
8. Floor and slab treatments.
9. Bonding agents.
10. Adhesives.
11. Vapor retarders.
12. Semirigid joint filler.
13. Joint-filler strips.
14. Repair materials.

H. Floor surface flatness and levelness measurements to determine compliance with specified tolerances.

I. Field quality-control test reports.

J. Minutes of preinstallation conference.

1.5 QUALITY ASSURANCE

A. Installer Qualifications: A qualified installer who employs on Project personnel qualified as ACI-certified Flatwork Technician and Finisher and a supervisor who is an ACI-certified Concrete Flatwork Technician.

B. Manufacturer Qualifications: A firm experienced in manufacturing ready-mixed concrete products and that complies with ASTM C 94/C 94M requirements for production facilities and equipment.

1. Manufacturer certified according to NRMCA's "Certification of Ready Mixed Concrete Production Facilities."

C. Testing Agency Qualifications: An independent agency **,** qualified according to ASTM C 1077 and ASTM E 329 for testing indicated, as documented according to ASTM E 548.

D. Source Limitations: Obtain each type or class of cementitious material of the same brand from the same manufacturer's plant, obtain aggregate from one source, and obtain admixtures through one source from a single manufacturer.

E. Welding: Qualify procedures and personnel according to AWS D1.4, "Structural Welding Code--Reinforcing Steel."

F. ACI Publications: Comply with the following unless modified by requirements in the Contract Documents:

1. ACI 301, "Specification for Structural Concrete.
2. ACI 117, "Specifications for Tolerances for Concrete Construction and Materials."

G. Concrete Testing Service: Engage a qualified independent testing agency to perform material evaluation tests and to design concrete mixtures.

H. Preinstallation Conference: Conduct conference at Project site to comply with requirements in Division 01 Section "Project Management and Coordination."

1. Before submitting design mixtures, review concrete design mixture and examine procedures for ensuring quality of concrete materials. Require representatives of each entity directly concerned with cast-in-place concrete to attend, including the following:

a. Contractor's superintendent.
b. Independent testing agency responsible for concrete design mixtures.
c. Ready-mix concrete manufacturer.
d. Concrete subcontractor.

1.6 DELIVERY, STORAGE, AND HANDLING

A. Steel Reinforcement: Deliver, store, and handle steel reinforcement to prevent bending and damage.

B. Waterstops: Store waterstops under cover to protect from moisture, sunlight, dirt, oil, and other contaminants.

PART 2 - PRODUCTS

2.1 FORM-FACING MATERIALS

A. Smooth-Formed Finished Concrete: Form-facing panels that will provide continuous, true, and smooth concrete surfaces. Furnish in largest practicable sizes to minimize number of joints.

1. Plywood, metal, or other approved panel materials.
2. Exterior-grade plywood panels, suitable for concrete forms, complying with DOC PS 1, and as follows:

a. High-density overlay, Class 1 or better.

b. Medium-density overlay, Class 1 or better; mill-release agent treated and edge sealed.
c. Structural 1, B-B or better; mill oiled and edge sealed.
d. B-B (Concrete Form), Class 1 or better; mill oiled and edge sealed.

B. Rough-Formed Finished Concrete: Plywood, lumber, metal, or another approved material. Provide lumber dressed on at least two edges and one side for tight fit.

2.2 STEEL REINFORCEMENT

A. Recycled Content of Steel Products: Provide products with an average recycled content of steel products so postconsumer recycled content plus one-half of preconsumer recycled content is not less than 95 percent.

B. Reinforcing Bars: ASTM A 615, Grade 60, deformed.

C. Low-Alloy-Steel Reinforcing Bars: ASTM A 706, deformed.

D. Plain-Steel Wire: ASTM A 82.

E. Deformed-Steel Wire: ASTM A 496.

F. Plain-Steel Welded Wire Reinforcement: ASTM A 185, plain, fabricated from as-drawn steel wire into flat sheets.

G. Deformed-Steel Welded Wire Reinforcement: ASTM A 497, flat sheet.

2.3 REINFORCEMENT ACCESSORIES

A. Joint Dowel Bars: ASTM A 615, plain-steel bars, cut bars true to length with ends square and free of burrs.

B. Epoxy Repair Coating: Liquid, two-part, epoxy repair coating; compatible with epoxy coating on reinforcement and complying with ASTM A 775/A 775M.

C. Zinc Repair Material: ASTM A 780, zinc-based solder, paint containing zinc dust, or sprayed zinc.

2.4 CONCRETE MATERIALS

A. Cementitious Material: Use the following cementitious materials, of the same type, brand, and source, throughout Project:

1. Portland Cement: ASTM C 150, Type I and II. Supplement with the following:

a. Fly Ash: ASTM C 618, Class C and F.
b. Ground Granulated Blast-Furnace Slag: ASTM C 989, Grade 100 or 120.

2. Blended Hydraulic Cement: ASTM C 595, Type I (S), portland blast-furnace slag, I (P) portland-pozzolan, I (PM), pozzolan-modified portland , I (SM), slag-modified portland cement.

B. Silica Fume: ASTM C 1240, amorphous silica.

C. Normal-Weight Aggregates: ASTM C 33 coarse aggregate. Provide aggregates from a single source.

1. Maximum Coarse-Aggregate Size: 1-1/2 inches nominal.
2. Fine Aggregate: Free of materials with deleterious reactivity to alkali in cement.

D. Water: ASTM C 94 potable.

2.5 ADMIXTURES

A. Air-Entraining Admixture: ASTM C 260.

B. Chemical Admixtures: Provide admixtures certified by manufacturer to be compatible with other admixtures and that will not contribute water-soluble chloride ions exceeding those permitted in hardened concrete. Do not use calcium chloride or admixtures containing calcium chloride.

C. Set-Accelerating Corrosion-Inhibiting Admixture: Commercially formulated, anodic inhibitor or mixed cathodic and anodic inhibitor; capable of forming a protective barrier and minimizing chloride reactions with steel reinforcement in concrete and complying with ASTM C 494/C 494M, Type C.

D. Non-Set-Accelerating Corrosion-Inhibiting Admixture: Commercially formulated, non-set-accelerating, anodic inhibitor or mixed cathodic and anodic inhibitor; capable of forming a protective barrier and minimizing chloride reactions with steel reinforcement in concrete.

2.6 CURING MATERIALS

A. Evaporation Retarder: Waterborne, monomolecular film forming, manufactured for application to fresh concrete.

B. Absorptive Cover: AASHTO M 182, Class 2, burlap cloth made from jute or kenaf.

C. Moisture-Retaining Cover: ASTM C 171, polyethylene film or white burlap-polyethylene sheet.

D. Water: Potable.

E. Clear, Waterborne, Membrane-Forming Curing Compound: ASTM C 309, Type 1, Class B, dissipating.

F. Clear, Waterborne, Membrane-Forming Curing and Sealing Compound: ASTM C 1315, Type 1, Class A.

2.7 REPAIR MATERIALS

A. Repair Underlayment: Cement-based, polymer-modified, self-leveling product that can be applied in thicknesses from 1/8 inch, and that can be feathered at edges to match adjacent floor elevations.

B. Repair Overlayment: Cement-based, polymer-modified, self-leveling product that can be applied in thicknesses from 1/8 inch and that can be feathered at edges to match adjacent floor elevations.

2.8 CONCRETE MIXTURES, GENERAL

A. Prepare design mixtures for each type and strength of concrete, proportioned on the basis of laboratory trial mixture or field test data, or both, according to ACI 301.

B. Cementitious Materials: Use fly ash, pozzolan, ground granulated blast-furnace slag, and silica fume as needed to reduce the total amount of portland cement, which would otherwise be used, by not less than 25 percent. Limit percentage, by weight, of cementitious materials other than portland cement in concrete as follows:

1. Fly Ash: 40 percent.
2. Combined Fly Ash and Pozzolan: 40 percent.
3. Ground Granulated Blast-Furnace Slag: 50 percent.
4. Combined Fly Ash or Pozzolan and Ground Granulated Blast-Furnace Slag: 50 percent portland cement minimum, with fly ash or pozzolan not exceeding 25 percent.
5. Silica Fume: 10 percent.
6. Combined Fly Ash, Pozzolans, and Silica Fume: 50 percent with fly ash or pozzolans not exceeding 40 percent and silica fume not exceeding 10 percent.
7. Combined Fly Ash or Pozzolans, Ground Granulated Blast-Furnace Slag, and Silica Fume: 50 percent with fly ash or pozzolans not exceeding 40 percent and silica fume not exceeding 10 percent.

C. Admixtures: Use admixtures according to manufacturer's written instructions.

1. Use high-range water-reducing admixture in concrete, as required, for placement and workability.
2. Use water-reducing and retarding admixture when required by high temperatures, low humidity, or other adverse placement conditions.
3. Use water-reducing admixture in pumped concrete, concrete for heavy-use industrial slabs and parking structure slabs, concrete required to be watertight, and concrete with a water-cementitious materials ratio below 0.50.
4. Use corrosion-inhibiting admixture in concrete mixtures where indicated.

2.9 CONCRETE MIXTURES FOR BUILDING ELEMENTS

A. Drilled Shaft Piers: Proportion normal-weight concrete mixture as follows:

1. Minimum Compressive Strength: 3000 psi at 28 days.
2. Maximum Water-Cementitious Materials Ratio: 0.50.
3. Slump Limit: 5 inches, plus or minus 1 inch.
4. Air Content: 5-1/2 percent, plus or minus 1.5 percent at point of delivery for 1-1/2-inch nominal maximum aggregate size.

5. Air Content: 6 percent, plus or minus 1.5 percent at point of delivery for 1-inch nominal maximum aggregate size.

B. Footings: Proportion normal-weight concrete mixture as follows:

1. Minimum Compressive Strength: 3000 psi at 28 days.
2. Maximum Water-Cementitious Materials Ratio: 0.50.
3. Slump Limit: 4 inches, plus or minus 1 inch.
4. Air Content: 5-1/2 percent, plus or minus 1.5 percent at point of delivery for 1-1/2-inch nominal maximum aggregate size.
5. Air Content: **6** percent, plus or minus 1.5 percent at point of delivery for 1-inch nominal maximum aggregate size.

C. Slabs-on-Grade: Proportion normal-weight concrete mixture as follows:

1. Minimum Compressive Strength: 3000 psi at 28 days.
2. Minimum Cementitious Materials Content: 470 lb/cu. yd.
3. Select slump limit from two options in subparagraph below or revise to suit Project.
4. Slump Limit: 4 inches, plus or minus 1 inch.
5. Air Content: 5-1/2 percent, plus or minus 1.5 percent at point of delivery for 1-1/2-inch nominal maximum aggregate size.
6. Air Content: 6 percent, plus or minus 1.5 percent at point of delivery for 1-inch nominal maximum aggregate size.
7. Air Content: Do not allow air content of troweled finished floors to exceed 3 percent.

D. Suspended Slabs: Proportion normal-weight concrete mixture as follows:

1. Minimum Compressive Strength: 4000 psi at 28 days.
2. Minimum Cementitious Materials Content: 540 lb/cu. yd.
3. Slump Limit: 4 inches, plus or minus 1 inch.
4. Air Content: 5-1/2 percent, plus or minus 1.5 percent at point of delivery for 1-1/2-inch (38-mm) nominal maximum aggregate size.
5. Air Content: 6 percent, plus or minus 1.5 percent at point of delivery for 1-inch nominal maximum aggregate size.
6. Air Content: Do not allow air content of troweled finished floors to exceed 3 percent.

E. Columns, beams, girders & spandrels: Proportion normal-weight concrete mixture as follows:

1. Minimum Compressive Strength: 4000 psi at 28 days.
2. Maximum Water-Cementitious Materials Ratio: 0.45.
3. Slump Limit: 4 inches, plus or minus 1 inch.
4. Air Content: 5-1/2 percent, plus or minus 1.5 percent at point of delivery for 1-1/2-inch nominal maximum aggregate size.
5. Air Content: 6 percent, plus or minus 1.5 percent at point of delivery for 1-inch nominal maximum aggregate size.

F. Building Walls: Proportion normal-weight concrete mixture as follows:

1. Minimum Compressive Strength: 3000 psi at 28 days.
2. Maximum Water-Cementitious Materials Ratio: 0.50.
3. Slump Limit: 4 inches, plus or minus 1 inch.
4. Air Content: 5-1/2 percent, plus or minus 1.5 percent at point of delivery for 1-1/2-inch nominal maximum aggregate size.
5. Air Content: 6 percent, plus or minus 1.5 percent at point of delivery for 1-inch nominal maximum aggregate size.

2.10 FABRICATING REINFORCEMENT

A. Fabricate steel reinforcement according to CRSI's "Manual of Standard Practice."

2.11 REMOVING AND REUSING FORMS

A. General: Formwork for sides of beams, walls, columns, and similar parts of the Work that does not support weight of concrete may be removed after cumulatively curing at not less than 50 deg F (10 deg C) for 48 hours after placing concrete, if concrete is hard enough to not be damaged by form-removal operations and curing and protection operations are maintained.

1. Leave formwork for beam soffits, joists, slabs, and other structural elements that supports weight of concrete in place until concrete has achieved at least 70 percent of its 28-day design compressive strength, or after structural elements have been prestressed.
2. Remove forms only if shores have been arranged to permit removal of forms without loosening or disturbing shores.

B. Clean and repair surfaces of forms to be reused in the Work. Split, frayed, delaminated, or otherwise damaged form-facing material will not be acceptable for exposed surfaces. Apply new form-release agent.

C. When forms are reused, clean surfaces, remove fins and laitance, and tighten to close joints. Align and secure joints to avoid offsets. Do not use patched forms for exposed concrete surfaces unless approved by Architect.

2.12 SHORES AND RESHORES

A. Comply with ACI 31 and ACI 301 for design, installation, and removal of shoring and reshoring.

1. Do not remove shoring or reshoring until measurement of slab tolerances is complete.

B. In multistory construction, extend shoring or reshoring over a sufficient number of stories to distribute loads in such a manner that no floor or member will be excessively loaded or will induce tensile stress in concrete members without sufficient steel reinforcement.

C. Plan sequence of removal of shores and reshore to avoid damage to concrete. Locate and provide adequate reshoring to support construction without excessive stress or deflection.

2.13 STEEL REINFORCEMENT

A. General: Comply with CRSI's "Manual of Standard Practice" for placing reinforcement.

1. Do not cut or puncture vapor retarder. Repair damage and reseal vapor retarder before placing concrete.

B. Clean reinforcement of loose rust and mill scale, earth, ice, and other foreign materials that would reduce bond to concrete.

C. Accurately position, support, and secure reinforcement against displacement. Locate and support reinforcement with bar supports to maintain minimum concrete cover. Do not tack weld crossing reinforcing bars.

1. Weld reinforcing bars according to AWS D1.4, where indicated.

D. Set wire ties with ends directed into concrete, not toward exposed concrete surfaces.

E. Install welded wire reinforcement in longest practicable lengths on bar supports spaced to minimize sagging. Lap edges and ends of adjoining sheets at least one mesh spacing. Offset laps of adjoining sheet widths to prevent continuous laps in either direction. Lace overlaps with wire.

F. Epoxy-Coated Reinforcement: Repair cut and damaged epoxy coatings with epoxy repair coating according to ASTM D 3963/D 3963M. Use epoxy-coated steel wire ties to fasten epoxy-coated steel reinforcement.

G. Zinc-Coated Reinforcement: Repair cut and damaged zinc coatings with zinc repair material according to ASTM A 780. Use galvanized steel wire ties to fasten zinc-coated steel reinforcement.

2.14 CONCRETE PROTECTING AND CURING

A. General: Protect freshly placed concrete from premature drying and excessive cold or hot temperatures. Comply with ACI 306.1 for cold-weather protection and ACI 301 for hot-weather protection during curing.

B. Evaporation Retarder: Apply evaporation retarder to unformed concrete surfaces if hot, dry, or windy conditions cause moisture loss approaching 0.2 lb/sq. ft. x h before and during finishing operations. Apply according to manufacturer's written instructions after placing, screeding, and bull floating or darbying concrete, but before float finishing.

C. Formed Surfaces: Cure formed concrete surfaces, including underside of beams, supported slabs, and other similar surfaces. If forms remain during curing period, moist cure after loosening forms. If removing forms before end of curing period, continue curing for the remainder of the curing period.

D. Unformed Surfaces: Begin curing immediately after finishing concrete. Cure unformed surfaces, including floors and slabs, concrete floor toppings, and other surfaces.

E. Cure concrete according to ACI 308.1, by one or a combination of the following methods:

1. Moisture Curing: Keep surfaces continuously moist for not less than seven days with the following materials:

    a. Water.
    b. Continuous water-fog spray.
    c. Absorptive cover, water saturated, and kept continuously wet. Cover concrete surfaces and edges with 12-inch lap over adjacent absorptive covers.

2. Moisture-Retaining-Cover Curing: Cover concrete surfaces with moisture-retaining cover for curing concrete, placed in widest practicable width, with sides and ends lapped at least 12 inches, and sealed by waterproof tape or adhesive. Cure for not less than seven days. Immediately repair any holes or tears during curing period using cover material and waterproof tape.

    a. Moisture cure or use moisture-retaining covers to cure concrete surfaces to receive floor coverings.

b. Moisture cure or use moisture-retaining covers to cure concrete surfaces to receive penetrating liquid floor treatments.
c. Cure concrete surfaces to receive floor coverings with either a moisture-retaining cover or a curing compound that the manufacturer certifies will not interfere with bonding of floor covering used on Project..

3. Curing Compound: Apply uniformly in continuous operation by power spray or roller according to manufacturer's written instructions. Recoat areas subjected to heavy rainfall within three hours after initial application. Maintain continuity of coating and repair damage during curing period.

   a. After curing period has elapsed, remove curing compound without damaging concrete surfaces by method recommended by curing compound manufacturer unless manufacturer certifies curing compound will not interfere with bonding of floor covering used on Project.

4. Curing and Sealing Compound: Apply uniformly to floors and slabs indicated in a continuous operation by power spray or roller according to manufacturer's written instructions. Recoat areas subjected to heavy rainfall within three hours after initial application. Repeat process 24 hours later and apply a second coat. Maintain continuity of coating and repair damage during curing period.

2.15 Miscellaneous Concrete Items

A. Continuous waterstops at concrete wall joints or horizontal joints in wall and floor transitions shall be dumbbell type for non-working joints and dumbbell with centerbulb type for working joints.

1. Waterstops shall be coordinated with waterproofing assemblies specified and detailed in architectural documents specific to joint sealants.
2. Contractor shall coordinate waterstops at joints with all necessary sealants, backings and related materials required to waterproof the joint and as specified by the Architect, refer to section 07900.
3. Waterstops shall be continuous at splices and corners and shall be subjected to the testing frequency set forth by the architect.

END OF SECTION

SECTION 02750
COLORED CONCRETE

PART 1 - GENERAL

1.01 DESCRIPTION

A. This section includes requirements for integrally colored concrete.

1.02 RELATED DOCUMENTS

A. Drawings and general provisions of the Contract, including General and Supplementary Conditions and Division 01 Specification Sections, apply to this Section.
B. Provisions herein augment requirements specified under Sections 03300, Cast-in Place Concrete.

1.03 SUMMARY

A. This Section includes the following:
   1. Grading
   2. Subsurface Preparation
   3. Reinforcing
   4. Concrete Finishing
   5. Jointing
   6. Curing agents

B. Related Sections include the following:

   1. Division 03 Section "Cast-in-Place Concrete" for installation of components in concrete.
   2. Division 07920, Joint Sealants. Provide in color to match colored concrete.
   3. Division 31 Section "Earth Moving" for excavation for installation of concrete footings.

1.04 SUBMITTALS

A. Product Data: supplier of coloring agent

B. Samples for Initial Selection: 4 X 4 foot sample panel of integral colored concrete and specified finish

C. Samples for Verification: For each type of integral color and exposed finish required, prepared on Samples of size indicated below.

   1. Size: 4’ X 4’, colored and scored

1.05 QUALITY ASSURANCE

A. Source Limitations: submit concrete supplier, admixtures, curing agents and color from a single source supplier
B. Iron Oxide agents to comply with ASTM C979

PART 2 - PRODUCTS

2.01 MATERIALS

A. Cement, Water, and Other Admixtures: Refer to Section 03300, Cast-in-Place Concrete. Obtain each material, including cement and aggregates, from same source throughout color concrete work.

B. Nonshrink, Nonmetallic Grout and Sealer: Premixed, factory-packaged, nonstaining, noncorrosive, nongaseous grout complying with ASTM C 1107; recommended in writing by manufacturer, for exterior applications and matching colored concrete when in the colored field only.

C. Coloring Agent

1. Dark Grey Integral Color - sack mix as specified by supplier/manufacturer
   Davis Concrete Colors - #8084
   3700 E Olympic Boulevard
   Los Angeles, Ca 90023
   1.800.356.4848

C. Bond Breaker to be used between adjacent pours for specified use with colored concrete

D. Concrete curing compound-per mfg's recommendations, Liquid membrane Forming-Curing Compound comply with ASTM C 309 Type 1 and Class B. Davis color W-1000 Clear Cure and Seal, tinted to match colored concrete.

2.02 CONCRETE MIX DESIGN

A. Concrete mix design shall conform to the requirements specified in Section 03300, Cast-in-Place Concrete, and the following additional requirements:

1. Match the sample available in the Engineer's office, utilizing the cement, aggregates, and pigmented additive specified in the Contract Documents.

2. Use of admixtures, in addition to pigmented additive itself, shall be subject to the written approval of the color additive manufacturer.

3. Dosage rate of color additive shall not exceed 10 percent of weight of cementitious materials in mix.

B. Maintain water content and control slump to maintain constant color.

C. Color Additives: Mix in accordance with manufacturer's instructions. Mix until color additives are uniformly dispersed throughout and disintegrating bags, if used, have disintegrated.

D. Patching Mix: If any patching is permitted, mix according to pigmented additive manufacturer's written instructions. Refer to Section 03350, Concrete Finishing, for additional requirements for patching.

PART 3 - EXECUTION

3.01 EXAMINATION

A. Examine areas and conditions, with Installer present, for compliance with requirements for correct and level finished grade, mounting surfaces, installation tolerances, and other conditions affecting performance.

1. Proceed with installation only after unsatisfactory conditions have been corrected.

3.02 INSTALLATION, GENERAL

A. Comply with manufacturer's written instructions unless more stringent requirements are indicated.
B. Install forms as indicated in the drawings to horizontal geometry with consistent and true radii or straight lines at grades and slopes as shown. ½" deviation in 20' for straight lines and ½" deviation over 25 degrees for arcs and radii.

3.03 CLEANING

A. After completing installation,

END OF SECTION 03335

SECTION 03381

UNBONDED POST-TENSIONED CONCRETE

PART 1 - GENERAL

1.1 RELATED DOCUMENTS

A. Drawings and general provisions of the Contract, including General and Supplementary Conditions and Division 01 Specification Sections, apply to this Section.

1.2 SUMMARY

A. This Section includes the following:

1. Furnishing post-tensioning reinforcement and accessories including encapsulated prestressing tendons, pocket formers, support bars, bar chairs, and slab bolsters.
2. Installing post-tensioning tendons.
3. Performing post-tensioning operations including stressing and finishing tendons.
4. Recording tendon elongations and gage pressures.
5. Finishing tendon ends and patching stressing pockets.

B. Related Sections include the following:

1. Division 03 Section "Cast-in-Place Concrete" for cast-in-place concrete, steel reinforcement, placement of nonprestressed steel reinforcement, and concrete strength testing of laboratory- and field-cured cylinders.

1.3 PERFORMANCE REQUIREMENTS

A. Structural Performance: Design cast-in-place, post-tensioned concrete reinforcement as indicated in this Section. Show final effective forces, tendon profiles, and nonprestressed reinforcement on design Shop Drawings.

B. Employ experienced manufacturer or fabricator, acceptable to Owner, to perform design. Sign and seal design Shop Drawings submitted to Owner for review. Prepare and seal drawings and calculations for submittal to authorities having jurisdiction. Comply with design intent, criteria, and requirements of the Contract Documents.

C. Average Precompression:

1. Minimum Average Slab Precompression: 125 psi.
2. Maximum Average Slab Precompression: 300 psi.
3. Minimum Average Precompression in T-, L-, and Rectangular-Beam Cross Sections: 200 psi.
4. Minimum Precompression in Slab Section Not Included in T- or L-Beam Section: 125psi.
5. Maximum Precompression in Transfer Girders: 1000 psi. Specify stage-stressing sequence to avoid overstress.

D. Comply with ACI 318 limits on stresses at transfer of prestress and under service load.

E. Comply with ACI 318 requirements for minimum bonded reinforcement.

F. Comply with ACI 318 requirements for concrete cover over reinforcement.

1. Locate closure strips at midspan and adjust tendon forces and profiles accordingly. Calculate moments in spans with closure strips assuming a continuous slab. Provide only nonprestressed reinforcement within closure strips. Design reinforcement in closure strip to carry ultimate moment at midspan.

1.4 QUALITY ASSURANCE

A. Installer Qualifications: A qualified installer whose full-time Project superintendent has successfully completed PTI's Level 1 - Field Fundamentals course or has equivalent verifiable experience and knowledge acceptable to Architect.

1. Superintendent must have received training from post-tensioning supplier in the operation of stressing equipment to be used on Project.

B. Manufacturer Qualifications: Fabricating plant certified by PTI according to procedures set forth in PTI's "Manual for Certification of Plants Producing Unbonded Single Strand Tendons."

C. Testing Agency Qualifications: An independent agency qualified according to ASTM E 329 for testing indicated, as documented according to ASTM E 548.

1. Testing Agency Inspector: Personnel performing field inspections and measuring elongations shall have successfully completed PTI's Level 1 - Field Fundamentals course or shall have equivalent qualifications acceptable to Architect.

D. Source Limitations: Obtain post-tensioning materials and equipment from the same supplier.

1. Stressing jacks not provided by post-tensioning supplier must be calibrated and approved for use on Project by post-tensioning supplier.

E. ACI Publications: Comply with ACI 423.6, "Specification for Unbonded Single Strand Tendons," unless otherwise indicated in the Contract Documents.

F. Preinstallation Conference: Conduct conference at Project site to comply with requirements in Division 01 Section "Project Management and Coordination." Review methods and procedures related to installation and stressing of post-tensioning tendons including.

1.5 DELIVERY, STORAGE, AND HANDLING

A. Deliver, store, and handle post-tensioning materials according to PTI's "Field Procedures Manual for Unbonded Single Strand Tendons."

B. Inspect tendons and accessory items at time of their delivery to Project site, prior to off-loading. Notify post-tensioning supplier of observed damage prior to off-loading.

C. Keep accurate and current records of materials delivered and used.

D. Immediately remove from Project site any tendons with damaged strand.

1.6 COORDINATION

A. Attachments and Penetrations:

PART 2 - PRODUCTS

2.1 PRESTRESSING TENDONS

A. Prestressing Strand: ASTM A 416, Grade 270, uncoated, 7-wire, low-relaxation, 0.5-inch-diameter strand.

B. Post-Tensioning Coating: Compound with friction-reducing, moisture-displacing, and corrosion-inhibiting properties specified in ACI 423.6; chemically stable and nonreactive with prestressing steel, nonprestressed reinforcement, sheathing material, and concrete.

1. Minimum Coating Weight: 2.5 lb for 0.5-inch- diameter strand per 100 feet of strand.
2. Completely fill annular space between strand and sheathing over entire tendon length with post-tensioning coating.

C. Tendon Sheathing: Comply with ACI 423.6.

1. Minimum Thickness: 0.050 inch for polyethylene or polypropylene with a minimum density of 0.034 lb/cu. in.
2. Continuous over the entire length of tendon [to provide watertight encapsulation of strand] [and] [between anchorages to prevent intrusion of cement paste or loss of coating for a non-encapsulated system].

D. Anchorage Device and Coupler Assembly: Assembly of strand, wedges, and anchorage device or coupler complying with static and fatigue testing requirements in ACI 423.6 and capable of developing 95 percent of actual breaking strength of strand.

1. Anchorage Bearing Stresses: Comply with ACI 423.6 for stresses at transfer load and service load.
2. Fixed-End Anchorage Device Assemblies: Plant fabricated with wedges seated at a load of not less than 80 percent and not more than 85 percent of breaking strength of strand.

E. Encapsulation System: Watertight encapsulation of prestressing strand consisting of the following:

1. Wedge-Cavity Caps: Attached to anchorages with a positive mechanical connection and completely filled with post-tensioning coating.

a. Caps for Fixed and Stressing-End Anchorages Devices: Designed to provide watertight encapsulation of wedge cavity. Sized to allow required extension of strand past the wedges.

1) Attach cap for fixed-end anchorage device in fabricating plant.

b. Caps at Intermediate Anchorages: Open to allow passage of strand.

2. Sleeves: Attached to anchorage device with positive mechanical connection; overlapped a minimum of 4 inches with sheathing and completely filled with post-tensioning coating.

2.2 NONPRESTRESSED STEEL BARS

A. Recycled Content of Steel Products: Provide products with an average recycled content of steel products so postconsumer recycled content plus one-half of preconsumer recycled content is not less than [25] [60] <Insert number> percent.

B. Support Bars, Reinforcing Bars, Hairpins: ASTM A 615, Grade 60, deformed. Minimum support bar size is 1/2 inch.

C. Low-Alloy-Steel Support Bars, Reinforcing Bars, Hairpins: ASTM A 706, deformed.

D. Galvanized Support Bars, Reinforcing Bars, Hairpins: ASTM A 615, Grade 60; A 706 deformed bars.

E. Supports: Bolsters, chairs, spacers, and other devices for spacing, supporting, and fastening tendons and tendon support bars in place. Manufacture bar supports, according to CRSI's "Manual of Standard Practice," from steel wire, plastic, or precast concrete of greater compressive strength than concrete, and as follows:

1. For uncoated bars, use CRSI Class 1 plastic-protected bar supports.

2.3 ACCESSORIES

A. Pocket Formers: Capable of completely sealing wedge cavity; sized to provide the required cover over the anchorage and allow access for cutting strand tail.

B. Anchorage Fasteners: [**Stainless-steel**] [**Galvanized steel**] [**Uncoated steel**] nails, wires, and screws used to attach anchorage devices to formwork.

C. Sheathing Repair Tape: Elastic, self-adhesive, moisture proof tape with minimum width of 2 inches, in contrasting color to tendon sheathing; nonreactive with sheathing, coating, or prestressing steel.

1. Available Products: Subject to compliance with requirements, products that may be incorporated into the Work include, but are not limited to, the following:
2. Products: Subject to compliance with requirements, provide one of the following:

a. Adhesive Tape Products, Inc.; PWT-20.
b. 3M; Tape 226.
c. Tyco Adhesives; Polyken 826.

PART 3 - EXECTION

3.1 FORMWORK

A. Provide formwork for post-tensioned elements as specified in Division 03 Section "Cast-in-Place Concrete." Design formwork to support load redistribution that may occur during stressing operation. Ensure that formwork does not restrain elastic shortening, camber, or deflection resulting from application of prestressing force.

B. Do not remove forms supporting post-tensioned elements until tendons have been fully stressed and elongations have been approved by Architect, unless authorized in writing by Architect.

C. Do not place concrete in supported floors until tendons on supporting floors have been stressed and elongations have been approved by Architect, unless authorized in writing by Architect.

3.2 NONPRESTRESSED STEEL REINFORCEMENT PLACEMENT

A. Placement of nonprestressed steel reinforcement is specified in Division 03 Section "Cast-in-Place Concrete." Coordinate placement of nonprestressed steel reinforcement with installation of post-tensioning tendons.

3.3 TENDON INSTALLATION

A. Install tendons according to approved installation drawings and procedures stated in PTI's "Field Procedures Manual for Unbonded Single Strand Tendons."

B. Tendon Supports: Provide continuous slab bolsters or bars supported on individual high chairs spaced at a maximum of 42 inches o.c. to ensure tendons remain in their designated positions during construction operations and concrete placement.

C. Maintain tendon profile within maximum allowable deviations from design profile as follows:

1. 1/4 inch for member depth less than or equal to 8 inches.
2. 3/8 inch for member depth greater than 8 inches and less than or equal to 24 inches (610 mm).
3. 1/2 inch for member depth greater than 24 inches.

D. Maintain minimum radius of curvature of 480-strand diameters for lateral deviations to avoid openings, ducts, and embedded items. Maintain a minimum of 2 inches (50 mm) of separation between tendons at locations of curvature.

E. Limit tendon bundles to [five] <Insert number> tendons. Do not twist or entwine tendons within a bundle. Maintain a minimum distance of 12 inches (300 mm) between center of adjacent bundles.

F. If tendon locations conflict with nonprestressed reinforcement or embedded items, tendon placement governs unless changes are authorized in writing by Architect. Obtain Architect's approval before relocating tendons or tendon anchorages that interfere with one another.

G. Deviations in horizontal spacing and location of slab tendons are permitted when required to avoid openings and inserts.

H. Installation of Anchorage Devices:

1. Place anchorage devices at locations shown on approved installation drawings.
2. Do not switch fixed and stressing-end anchorage locations unless authorized in writing by Architect.
3. Attach pocket formers, intermediate anchorage devices, and stressing-end anchorage devices securely to bulkhead forms. Install stressing-end and intermediate anchorage devices perpendicular to tendon axis.
4. Install tendons straight, without vertical or horizontal curvature, for a minimum of 12 inches behind stressing-end and intermediate anchorages.
5. Embed intermediate anchorage devices at construction joints in first concrete placed at joint.

6. Minimum splice length in reinforcing bars at anchorages is 24 inches. Stagger splices a minimum of 60 inches.
7. Place fixed-end anchorage devices in formwork at locations shown on installation drawings. Support anchorages firmly to avoid movement during concrete placement.
8. Remove loose caps on fixed-end anchorages, refill with post-tensioning coating, and re-attach caps to achieve a watertight enclosure.

I. Maintain minimum concrete cover:

J. Maintain minimum clearance of 6 inches (150 mm) between tendons and openings.

K. Prior to concrete placement, mark tendon locations on formwork with spray paint.

L. Do not install sleeves within 36 inches of anchorages after tendon layout has been inspected unless authorized in writing by Architect.

M. Do not install conduit, pipe, or embeds requiring movement of tendons after tendon layout has been inspected unless authorized in writing by Architect.

N. Do not use couplers unless location has been approved by Architect.

3.4 SHEATHING INSPECTION AND REPAIR

A. Inspect sheathing for damage after installing tendons. Repair damaged areas by restoring post-tensioning coating and repairing or replacing tendon sheathing.

1. Ensure that sheathing is watertight and there are no air voids.
2. Follow tape repair procedures in PTI's "Field Procedures Manual for Unbonded Single Strand Tendons."

B. Maximum length of exposed strand behind anchorages is as follows:

1. Fixed End: 12 inches.
2. Intermediate and Stressing End: 2 inches.

    a. Cover exposed strand with sheathing repair tape to prevent contact with concrete.

C. Immediately remove and replace tendons that have damaged strand.

3.5 CONCRETE PLACEMENT

A. Do not place concrete until placement of tendons and nonprestressed steel reinforcement has been inspected by testing agency.

B. Provide Architect and testing agency a minimum of 48 hours' notice before concrete placement.

C. Place concrete as specified in Division 03 Section "Cast-in-Place Concrete." Ensure compaction of concrete around anchorages.

D. Ensure that position of tendon and nonprestressed steel reinforcement does not change during concrete placement. Reposition tendons and nonprestressed steel reinforcement moved during concrete placement.

E. Ensure that method of concrete placement does not damage tendon sheathing. Do not support pump lines, chutes, or other concrete placing equipment on tendons.

3.6 TENDON STRESSING

A. Calibrate stressing jacks and gages at start of job and at least every six months thereafter. Keep copies of calibration certificates for each jack-and-gage pair on Project site and available for inspection. Exercise care in handling stressing equipment to ensure that proper calibration is maintained.

B. Stress tendons only under supervision of qualified post-tensioning superintendent.

C. Do not begin stressing operations until concrete strength has reached 3000 psi as indicated by compression tests of field-cured cylinders.

D. If concrete has not reached required strength, obtain Architect's approval to partially stress tendons and delay final stressing until concrete has reached required strength.

E. Stage stress transfer girders according to schedule shown on the Contract Drawings.

F. If detensioning and restressing of tendon is required, discard wedges used in original stressing and provide new wedges.

G. Mark and measure elongations according to PTI's "Field Procedures Manual for Unbonded Single Strand Tendons." Measure elongations to closest 1/8 inch.

H. Submit stressing records within one day of completion of stressing. If discrepancies between measured and calculated elongations exceed plus or minus 7 percent, resolve these discrepancies to satisfaction of Architect.

I. Prestressing will be considered acceptable if gage pressures shown on stressing record correspond to required stressing force and calculated and measured elongations agree within 7 percent.

J. If measured elongations deviate from calculated elongations by more than 7 percent, additional testing, restressing, strengthening, or replacement of affected elements may be required.

3.7 TENDON FINISHING

A. Do not cut strand tails or cover anchorages until stressing records have been reviewed and approved by Architect.

B. Cut strand tails as soon as possible after approval of elongations.

C. Cut strand tail between 1/2 and 3/4 inch from wedges. Do not damage tendon or concrete during removal of strand tail. Acceptable methods of cutting strand tail include the following:

1. Oxyacetylene flame.
2. Abrasive wheel.
3. Hydraulic shears.
4. Plasma cutting.

D. Install caps and sleeves on intermediate anchorages within one day of stressing.

E. Cut strand tails and install caps on stressing-end anchorages within one day of Architect's acceptance of elongations.

F. Patch stressing pockets within one day of cutting strand tail. Clean inside surface of pocket to remove laitance or post-tensioning coating before installing patch material. Finish patch material flush with adjacent concrete.

3.8 FIELD QUALITY CONTROL

A. Testing Agency: Owner will engage a qualified independent testing and inspecting agency to perform field tests and inspections and prepare test reports. Cooperate with testing agency to facilitate the execution of its duties.

1. Before concrete placement, testing agency will inspect the following for compliance with post-tensioning installation drawings and the Contract Documents:

    a. Location and number of tendons.
    b. Tendon profiles and cover.
    c. Installation of backup bars, hairpins, and other nonprestressed reinforcement shown on post-tensioning installation drawings.
    d. Installation of pocket formers and anchorage devices.
    e. Repair of damaged sheathing.
    f. Connections between sheathing and anchorage devices.

2. Testing agency will record tendon elongations during stressing.
3. Testing agency will immediately report deviations from the Contract Documents to Architect.

3.9 PROTECTION

A. Do not expose tendons to electric ground currents, welding sparks, or temperatures that would degrade component.

B. Protect exposed components within one workday of their exposure during installation.

C. Prevent water from entering tendons during installation and stressing.

D. Provide weather protection to stressing-end anchorages if strand tails are not cut within 10 days of stressing the tendons.

3.10 REPAIRS

A. Submit repair procedure to Architect for evaluation and approval.

B. Do not proceed with repairs requiring removal of concrete unless authorized in writing by Architect.

END OF SECTION

SECTION 03 45 00
ARCHITECTURAL PRECAST CONCRETE (APC)

PART 1 - GENERAL

1.1 SUMMARY

A. Furnish labor, materials, tools, equipment, and services for Architectural Precast Concrete (APC) as indicated, in accordance with provisions of Contract Documents.

B. Completely coordinate with work of other trades.

1.2 QUALITY ASSURANCE

A. Material standards:
   1. ASTM A185: Steel Welded Wire Fabric, Plain for Concrete Reinforcement.
   2. ASTM A497: Steel Wire, Deformed for Concrete Reinforcement.
   3. ASTM A615: Deformed and Plain Billet-Steel Bars for Concrete Reinforcement.
   4. ASTM C33: Concrete Aggregates (Normal-weight).
   5. ASTM C144: Standard Specifications for Portland Cement.
   6. ASTM C150: Standard Specifications for Portland Cement.
   7. ASTM C260: Specifications for Air-Entraining Admixtures for Concrete.
   8. ASTM C494: Standard Specifications for Chemical Admixtures for Concrete.
   9. ASTM C1107: Standard Specification for Packaged Dry, Hydraulic-Cement Grout (Nonshrink).
   10. Other material standards listed.

B. Testing Standards:
   1. ASTM C39: Compressive Strength of Cylindrical Concrete Specimens.
   2. ASTM C231: Test for Air Content of Freshly Mixed Concrete by Pressure Method.
   3. ASTM C642: Test for Density, Absoption, and Voids in Hardened Concrete.

C. Fabricator Qualifications:
   1. A firm complying with the following requirements and experienced in producing architectural precast concrete units similar to those indicated and with a record of successful in-service performance.
      a. Manufacturers desiring approval comply with Section 00 26 00.
   2. PCI-Certified for Group A, Category A1-Architectural Cladding and Load Bearing Units.
   3. Have sufficient capacity to produce required units without delaying Work.
   4. Assume responsibility for engineering of APC units to comply with Building Code requirements as locally adopted.

D. Engineer Qualifications:
   1. Registered Engineer, licensed to practice Structural Engineering in the State of _____ and who is experienced in providing engineering services of the kind indicated.

E. Erector Qualifications:
   1. Certificate of Compliance furnished by PCI designating qualification in Category A (Architectural Systems) for non-load-bearing members.
   2. Certify welders according to AWS D1.1: Structural Welding Code – Steel and AWS D1.4: Structural Welding Code – Reinforcing Steel.

F. Testing Agency Qualifications:

1. An independent testing agency, acceptable to authorities having jurisdiction and qualified (according to ASTM C1077 and ASTM E329) to conduct the testing indicated, as documented according to ASTM E548.

G. Testing:
   1. Test one set of cylinders for each 50 cubic yards of concrete, but not less than one set for each day's pour.
      a. Test for air content each time cylinders are made, in accordance with ASTM C231.
      b. Test for water absorption in accordance with ASTM C642 or PCI MNL 117.
      c. Test cylinders in accordance with ASTM C39. One at 7 days and 2 at 28 days.

H. Fabrication Tolerances:
   1. Refer to Part 2.

I. Erection Tolerances:
   1. Refer to Part 3.

J. Quality-Control Standard:
   1. For manufacturing procedures and testing requirements, quality- control recommendations, and dimensional tolerances for types of units required: Comply with PCI MNL 117: Manual for Quality Control for Plants and Production of Architectural Precast Concrete Products.

K. Design Requirements:
   1. Comply with ACI 318 and the design recommendations of PCI MNL 120: PCI Design Handbook – Precast and Prestressed Concrete, applicable to types of architectural precast concrete units indicated.
   2. Design units and connections to satisfy requirements of applicable Building Codes.
   3. Provide architectural precast concrete units and connections capable of withstanding the following design loads within limits and under conditions indicated:
      a. Include effect from adjacent attached construction.
      b. Wind pressure, and/or earthquake lateral forces.
      c. Live Loads.
      d. Dead load of unit plus superimposed loads.
      e. Handling, transportation, and erection forces.
      f. Temperature stresses appropriate for project site and conditions.
      g. Shrinkage stresses.
   4. Design framing system and connections to maintain clearances at openings, to allow for fabrication and construction tolerances, to accommodate live load deflection, shrinkage and creep of primary building structure, and other building movements as follows:
      a. Upward and downward movement of L/300 for floors and L/200 for roofs.
   5. Show, by engineering calculations, embedded connections can adequately support anticipated loads.
      a. When approved by Architect, load tests may be substituted for calculations.
   6. Design, detail and provide internal reinforcing and embedded connection hardware.
   7. Reinforce units with welded wire fabric or reinforcing bars as needed to satisfy design criteria or provide following minimum reinforcing, whichever is greater:
      a. Unit thickness up to 4 IN: One layer 4 x 4 - W4.0 x W4.0.
      b. Unit thickness over 4 IN: Two layers 4 x 4 - W4.0 x W4.0.
   8. When unit is supported from rigid base, design connections to permit reasonable amount of independent vertical movement of structural frame.
   9. Attach connections placing lateral loads on structural members to elements capable of safely resisting forces without reinforcing, unless such reinforcing is provided by erector at no additional cost to Owner and in manner acceptable to Architect, unless detailed and accommodated otherwise.

10. Design, detail and provide connection hardware and anchors to be set in CIP Concrete and for Structural Steel frames associated with precast unit connections.
11. Design units and connections to load supporting steel sections at centerline of web creating no torsion in supporting member unless detailed otherwise.

1.3 MOCK-UP PANELS (ON-SITE)

A. After approval of small scale Samples, and before fabricating APC units, produce a Mock-up panel approximately 16 FT2, on-site.
   1. Locate panels where indicated or as directed.
   2. Incorporate full scale details of architectural features, finishes and textures.
   3. Include mock up of joint fillers.
   4. Maintain Mock-up during construction as a standard for judging the completed Work.
   5. Damage part of an exposed-face surface for each finish, color, and texture, and demonstrate adequacy of repair techniques proposed for repair of surface blemishes.
   6. Obtain approval of Mock-up before starting fabrication.
   7. Remove Mock-up panels when directed.

1.4 SUBMITTALS

A. Shop Drawings:
   1. Detail fabrication and installation of architectural precast concrete units including:
      a. Member locations, plans, elevations, dimensions, shapes and cross sections.
      b. Details at joints, reveals, and surface finish.
      c. Loose and cast-in hardware, connections and anchorage devices.
      d. Locations of dry joints if two-stage casting is proposed.
      e. Sequence of erection for special conditions.
      f. Identification mark on each panel.
      g. Relationship of architectural precast concrete units to adjacent materials.
   2. Design Calculations:
      a. Submit calculations described in Quality Assurance, Design Requirements.

B. Samples:
   1. Three, 12 x 12 x 2 IN, samples, replicating each of the colors and textures indicated, approval of appearance.
      a. Provide samples for each color/texture combination.
      b. Label samples to indicate name of project; fabricator; finish; type, color and source of cement and aggregate.
   2. Mock-up Panel on-site: As described herein.

C. Project Information:
   1. Test reports signed by certified testing agency.
   2. Design Mixes: For each concrete mix including compressive strength and water-absorption tests.

PART 2 - PRODUCTS

2.1 ACCEPTABLE MANUFACTURERS

A. Architectural Precast Concrete (APC) Fabricators:
   1. Base:
      a. _____.
   2. Optional:
      a. Enterprise Precast Concrete.
      b. Coreslab Structures Inc.

c. Clark Pacific.

B. Rust-inhibitive paint:
1. Base:
a. Tnemec.
b. ZRC Worldwide.

C. Other materials listed:
1. Base:
a. As indicated.

D. Other manufacturers desiring approval comply with Section 00 26 00.

2.2 MOLD MATERIALS

A. Molds:
1. Rigid, dimensionally stable, non-absorptive material, warp and buckle free, that will provide continuous and true precast concrete surfaces within fabrication tolerances indicated.
2. Non-reactive with concrete and suitable for producing required finishes.

B. Mold-Release Agents:
1. Commercially produced liquid-release agent that will not bond with, stain or adversely affect precast concrete surfaces and will not impair subsequent surface or joint treatments of precast concrete.

2.3 REINFORCING MATERIALS

A. General:
1. Suspend reinforcement from back of mold or use bolsters, chairs, spacers, and other devices for spacing, supporting, and fastening reinforcing bars and wire in place.
2. Use products with Corrosion-Resistant Coatings (of type indicated below) when concrete cover on exterior face is less than 1-1/2 IN or interior face is less than 3/4 IN. Otherwise, uncoated reinforcing may be used.

B. Reinforcing Bars:
1. Welded bars: ASTM A706.
2. Non-welded: ASTM A615 Grade 60, deformed.

C. Welded Wire Reinforcement:
1. Galvanized and chromate wash treated.
2. Plain: ASTM A185, flat sheet.

D. Corrosion-Resistant Coatings:

2.4 CONCRETE MATERIALS

A. Design Reference Sample:
1. Sample Number(s)_____ as illustrated in Architectural Precast Concrete – Color and Texture Selection Guide – 2nd Edition, published by PCI.

B. Portland Cement:
1. ASTM C150, Type I or III.
2. Same type, brand, and mill source throughout production.
3. Cement Color:
a. Face Mixes (portions of units exposed to view):
1) As necessary to reproduce coloration of Design Reference Sample.
b. Back-up mixes (portions of units not exposed to view):
1) Contractors option.

C. Normal-Weight Aggregates:

1. General:
   a. Conforming to ASTM C33 (normal weight) except as modified by PCI MNL 117:
      1) Employ coarse aggregates complying with Class 5S.
   b. Stockpile fine and coarse aggregates for each type of exposed finish from a single source for entire project.
2. Face-Mix Coarse Aggregates:
   a. Selected, hard, and durable; free of material that reacts with cement or causes staining.
   b. Color: To match selected Design Reference Sample.
   c. Gradation:
      1) To match selected Design Reference Sample.
3. Face-Mix Fine Aggregates:
   a. Selected, natural or manufactured sand of the same material as coarse aggregate, unless otherwise approved by Architect.
   b. Color: To match selected Design Reference Sample.

D. Coloring Admixture:
1. Color(s): As required by Design Reference Sample.
2. ASTM C979, synthetic or natural mineral-oxide pigments or colored water-reducing admixtures, temperature stable and non-fading.
3. Lime and alkali resistant.
4. Limit type and amount used so as not to reduce quality of concrete.

E. Water:
1. Potable; clean, fresh, free from oil, acid, organic matter or other deleterious substances that may affect color, stability, setting, or strength of concrete and complying with chemical limits of PCI MNL 117.

F. Air Entraining Admixture:
1. ASTM C260, certified by manufacturer to be compatible with other required admixtures.

G. Water-Reducing Admixture: ASTM C494, Type A.

H. Retarding Admixture: ASTM C494, Type B.

I. Water-Reducing and Retarding Admixture: ASTM C494, Type D

J. Water-Reducing and Accelerating Admixture: ASTM C494, Type E.

K. High-Range, Water-Reducing Admixture: ASTM C494, Type F.

L. High-Range, Water-Reducing and Retarding Admixture: ASTM C494, Type G.

M. Plasticizing Admixture for Flowable Concrete: ASTM C1017.

N. Admixtures containing calcium chloride, or more than 0.15% chloride ions or other salts by weight of admixture are not permitted.

2.5 CARBON STEEL CONNECTION MATERIALS

A. General:
1. Provide, as part of precast work, embedded inserts and anchorage items necessary for attachment of units to supporting and adjacent work.
2. Coordinate locations of embedded items with work of other trades.

B. Carbon-Steel Shapes and Plates:
1. ASTM A36 except silicon (Si) content in the range of 0 to 0.03%.
   a. 0.15 to 0.25% for materials to be galvanized.
   b. Steel with chemistry conforming to the formula Si + 2.5P less than or equal to 0.09 is also acceptable.
2. ASTM A283 for Carbon-Steel Plate.

C. Carbon-Steel Headed Studs:
   1. ASTM A108, Grades 1018 through 1020, cold finished and bearing the minimum mechanical properties for studs as indicated under MNL 117, Table 3.2.3.; AWS D1.1, Type A or B, with arc shields.

D. Malleable Iron Castings: ASTM A47, Grade 32510 or 35028.

E. Carbon-Steel Castings: ASTM A27, Grade U-60-30.

F. High-Strength, Low-Alloy Structural Steel:
   1. ASTM-A572 except silicon (Si) content in the range of 0 to 0.03%.
      a. 0.15 to 0.25% for materials to be galvanized.
      b. Steel with chemistry conforming to the formula Si + 2.5P less than or equal to 0.09 is also acceptable.

G. Carbon-Steel Structural Tubing: ASTM A500, Grade B.

H. Wrought Carbon-Steel Bars: ASTM A675, Grade 65.

I. Deformed-Steel Wire or Bar Anchors: ASTM A496 or ASTM A706.

J. Carbon-Steel Bolts and Studs:
   1. Hex-head bolts and studs: ASTM A307, Grade A.
   2. Nuts: ASTM A563, Grade A.
   3. Flat, unhardened steel washers: ASTM F844.
   4. Headed studs or deformed bar anchors:
      a. Headed studs having minimum tensile strength of 60,000 PSI, minimum yield strength of 52,000 PSI, ASTM A108.
      b. Deformed bar anchors having minimum tensile strength of 80,000 PSI, minimum yield strength of 70,000 PSI, ASTM A496.

K. High-Strength Bolts and Nuts:
   1. Heavy structural steel hex bolts: ASTM A325 or ASTM A490, Type 1,
   2. Heavy carbon-steel hex nuts: ASTM A563.
   3. Hardened carbon-steel washers: ASTM F436.

L. Protective Finish:
   1. Exterior steel items and items indicated for galvanizing:
      a. Apply zinc coating by hot-dip process according to ASTM A123 after fabrication, or ASTM A153 as applicable.

2.6 BEARING PADS AND OTHER ACCESSORIES

A. Provide bearing pads for architectural precast concrete units as follows:
   1. Elastomeric Pads:
      a. AASHTO M 251, plain, vulcanized, 100% neoprene.
      b. Surface hardness: 50 to 70 Shore A durometer according to ASTM D2240.
      c. Minimum tensile strength: 2250 PSI per ASTM D412.
   2. Random-Oriented, Fiber-Reinforced Elastomeric Pads:
      a. Preformed, randomly oriented synthetic fibers set in elastomer.
      b. Surface hardness: 70 to 90 Shore A durometer according to ASTM D2240.
      c. Capable of supporting a compressive stress of 3300 PSI with no cracking, splitting or delaminating in the internal portions of the pad.
      d. Test one specimen for each 200 pads used in the project.
   3. Cotton-Duck-Fabric-Reinforced Elastomeric Pads:
      a. Preformed, horizontally layered cotton-duck fabric bonded to an elastomer.
      b. Surface hardness: 80 to 100 Shore A durometer according to ASTM-D2240.
      c. Conforming to Division II, Section 18.10.2 of AASHTO LRFD Bridge Design Specifications, or Military Specification, MIL-C-882D.
   4. Frictionless Pads:

a. Teflon, glass-fiber reinforced, bonded to stainless or mild-steel plates, of type required for in-service stress.

5. High-Density Plastic:
   a. Multimonomer, nonleaching, plastic strip.

B. Reglets and Counterflashing:
   1. Specified in Section 07 62 00.
   2. APC fabricator to obtain reglet material specified and cast reglets into APC pieces.

C. Accessories:
   1. Provide clips, hangers, plastic or steel shims, and other accessories required to install architectural precast concrete units.

2.7 STONE MATERIALS AND ACCESSORIES

2.8 INSULATED PANEL ACCESSORIES

2.9 CONCRETE MIX DESIGN

A. Maximum Water Absorption:
   1. 6% by weight, equal to 14% by volume, tested according to PCI MNL 117.

B. Air-Entrainment:
   1. Provide concrete containing air-entraining admixture producing air content between 6 and 8% including entrapped air.

C. Normal-Weight Concrete Face and Backup Mixes:
   1. Proportion mixes by either laboratory trial batch or field test data methods according to ACI 211.1, with materials to be used on project, to provide normal-weight concrete with the following properties:
      a. Minimum Compressive Strength (28 Days): 5000 PSI.
      b. Maximum Water-Cementitious Materials Ratio: 0.45.

2.10 MOLD FABRICATION

A. Molds:
   1. Accurately construct molds, mortar tight, of sufficient strength to withstand pressures due to concrete-placement and vibration operations and temperature changes and for pre-stressing and de-tensioning operations.
   2. Coat contact surfaces of molds with release agent before reinforcement is placed.
   3. Avoid contamination of reinforcement and pre-stressing tendons by release agent.

B. Form Liners:
   1. Place form liners accurately to provide finished surface texture indicated.
   2. Provide solid backing and supports to maintain stability of liners during placing of concrete.
   3. Coat form liner with form-release agent.

C. Maintain molds to provide completed architectural precast concrete units of shapes, lines, and dimensions indicated, within fabrication tolerances specified.

D. Form joints are not permitted on faces exposed to view in the finished work.

2.11 PANEL FABRICATION

A. General:
   1. Mark each unit for identification and date of casting.
   2. Locate holes, inserts and other lifting mechanisms in non-finished surfaces.

B. APC Panel-to-Panel Joints:
   1. Typical:
      a. Unless otherwise shown provide for uniform joint widths of 3/4 IN.

2. Corners:
   a. 3/4 IN wide quirk miter joints where panel joint occur at external angles.

C. Panel Edge and Corner Treatment:
   1. Uniformly chamfered or as otherwise indicated.

D. Cast-in Anchors, Inserts, Plates, Angles, and Other Anchorage Hardware:
   1. Fabricate anchorage hardware with sufficient anchorage and embedment to comply with design requirements.
   2. Locate anchorage hardware where it does not affect position of main reinforcement or concrete placement.

E. Cast-in reglets, slots, holes, and other accessories in architectural precast concrete units as indicated on drawings.
   1. Cast-in openings larger than 10 IN in any dimension.
   2. Do not drill or cut pre-stressing strand.

F. Reinforcement:
   1. Clean reinforcement of loose rust and mill scale, earth, and other materials that reduce or destroy the bond with concrete.
      a. When damage to epoxy coated reinforcing exceeds limits specified ASTM A775 repair with patching material compatible with coating material and epoxy coat bar ends after cutting.
   2. Accurately position, support, and secure reinforcement against displacement during concrete- placement and consolidation operations.
      a. Completely conceal support devices to prevent exposure on finished surfaces.
   3. Install welded wire reinforcement in lengths as long as practicable.
      a. Lap adjoining pieces at least one full mesh spacing and wire tie laps, where required by design.
      b. Offset laps of adjoining widths to prevent continuous laps in either direction.

G. Pre-stress tendons for architectural precast concrete units by either pre-tensioning or post-tensioning methods.
   1. De-tension or post-tension pre-stressed architectural precast concrete units after concrete has reached its indicated minimum design release compressive strength as established by test cylinders.
   2. Protect strand ends and anchorages to prevent corrosion and rust spots.

H. Place concrete in a continuous operation to prevent seams or planes of weakness from forming in precast concrete units.

I. Comply with ACI 305R recommendations for hot-weather concrete placement.

J. Comply with ACI 306.1 procedures for cold-weather concrete placement.

K. Identify pickup points of architectural precast concrete units and orientation in structure with permanent markings as indicated on erection drawings.

L. Cure units until the compressive strength is high enough to ensure that stripping does not have an effect on the performance or appearance of the final product.

M. Repair damaged architectural precast concrete units to meet acceptability requirements of PCI MNL 117.

2.12 FABRICATION TOLERANCES - GENERAL

A. Fabricate architectural precast concrete units straight and true to size and shape with exposed edges and corners precise and true so each finished unit complies with the following product tolerances.
   1. Overall Height and Width of Units, Measured at the Face Exposed to View:
      a. 10 FT or under: Plus or minus 1/8 IN.
      b. 10 FT to 20 FT: Plus 1/8 IN, minus 3/16 IN.

c. 20 FT to 40 FT: Plus 1/8 IN, minus 1/4 IN.
d. Each additional 10 FT: Plus or minus (1 in 2000) to maximum 1/16 IN per 10 FT.

2. Overall Height and Width of Units, Measured at the Face Not Exposed to View: As follows:
   a. 10 FT or under: Plus or minus 1/4 IN.
   b. 10 FT to 20 FT: Plus 1/4 IN, minus 3/8 IN.
   c. 20 FT to 30 FT: Plus or minus 3/8 IN.
   d. Each additional 10 FT: Plus or minus 1/8 IN.
3. Total Thickness or Flange Thickness: Plus 1/4 IN, minus 1/8 IN.
4. Rib Thickness: Plus or Minus 1/8 IN.
5. Rib to Edge of Flange: Plus or Minus 1/8 IN.
6. Distance between Ribs: Plus or Minus 1/8 IN.
7. Alignment of ribbed members:
   a. 3/16 IN up to 40 FT.
   b. 1/4 IN in 40 FT or more.
8. Variation from Square: Plus or Minus 1/8 IN per 72 IN up to 1/4 IN.
9. Length and Width of Block-outs and Openings within One Unit: Plus/minus 1/4 IN.
10. Location and Dimension of Block-outs Hidden from View and Used for HVAC and Utility Penetrations: Plus or Minus Plus/minus 3/4 IN.
11. Dimensions of Haunches: Plus or Minus 1/4 IN.
12. Haunch Bearing Surface Deviation from Specified Plane: Plus or Minus 1/8 IN.
13. Difference in Relative Position of Adjacent Haunch Bearing Surfaces from Specified Relative Position: Plus or Minus 1/4 IN.
14. Bowing: Plus or Minus L/360, maximum 3/4 IN.
    a. Differential bowing between adjacent members: 1/4 IN.
15. Angular deviation of plane of side mold: (1 in 100) to maximum 1/16 IN.
16. Jog in alignment of edge: 1/4 IN.
17. Local Smoothness: 1/4 IN per 10 FT.
18. Maximum Warp (One corner out of plane of other three): (1 in 200) 1/16 IN per foot from nearest adjacent corner.
19. Tipping and Flushness of Plates: Plus or Minus 1/4 IN.
20. Dimensions of Architectural Features and Rustications: Plus or Minus 1/8 IN.
21. Dimensions not listed above: In any length: (1 in 2000) to maximum 1/8 IN.

B. Position Tolerances: For cast-in items measured from datum line location, as indicated on Shop Drawings.
   1. Weld Plates: Plus or Minus 1 IN.
   2. Inserts: Plus or Minus 1/2 IN.
   3. Handling Devices: Plus or Minus 3 IN.
   4. Reinforcing Steel and Welded Wire Reinforcement: Plus or Minus 1/4 IN where position has structural implications or affects concrete cover; otherwise, Plus or Minus 1/2 IN.
   5. Reinforcing Steel Extending out of Member: Plus or Minus 1/2 IN of plan dimensions.
   6. Tendons: Plus or Minus 1/4 IN, vertical; Plus or Minus 1 IN horizontal.
   7. Location of Rustication Joints: Plus or Minus 1/8 IN.
   8. Location of Opening within Panel: Plus or Minus 1/4 IN.
   9. Location of Flashing Reglets: Plus or Minus 1/4 IN.
   10. Location of Flashing Reglets at Edge of Panel: Plus or Minus 1/8 IN.
   11. Reglets for Glazing Gaskets: Plus or Minus 1/8 IN.
   12. Electrical Outlets, Hose Bibs: Plus or Minus 1/2 IN.
   13. Location of Bearing surface from End of Member: Plus or Minus 1/4 IN.
   14. Allowable Rotation of Plate, Channel Inserts, Electrical Boxes: 2-degree rotation or 1/4 IN maximum over the full dimension of the unit.
   15. Position of Sleeve: Plus or Minus 1/2 IN.

16. Location of Window Washer Track or Buttons: Plus or Minus 1/8 IN.

2.13 FINISHES

A. General:
   1. Panel faces shall be free of joint marks, grain, and other obvious defects.
   2. Corners, including false joints shall be uniform, straight and sharp.

B. Exposed Face and Edge Surfaces:
   1. Match colors and textures of Design Reference Sample (indicated in Part 2 – Concrete Materials).

C. Finishes of other Exposed Surfaces:
   1. Panel Tops Returns (i.e. parapet and sill): Finish to match face-surface finish.
   2. Panel Bottom Returns (i.e. soffits): Finish to match face-surface finish.
   3. Back of Panel (i.e. interior): Finish to be steel-trowel with light sandblast.

D. Unexposed surfaces:
   1. Smooth steel-trowel finish.

2.14 SOURCE QUALITY CONTROL

A. Quality-Control Testing: Test and inspect precast concrete according to PCI MNL 117 requirements.
   1. If using self-consolidating concrete: Also test and inspect according to PCI Interim Guidelines for the Use of Self-Consolidating Concrete.

B. Strength of precast concrete units will be considered deficient if units fail to comply with ACI 318 requirements for concrete strength.

C. Testing:
   1. If there is evidence that the concrete strength of precast concrete units may be deficient or may not comply with ACI 318 requirements, APC Fabricator will employ an independent testing agency to obtain, prepare, and test cores drilled from hardened concrete to determine compressive strength according to ASTM C42.
   2. Procedural Requirements:
      a. A minimum of three representative cores will be taken from units of suspect strength, from locations directed by Architect.
      b. Cores will be tested in an air-dry condition.
      c. Strength of concrete for each series of 3 cores will be considered satisfactory if the average compressive strength is equal to at least 85 percent of the 28-day design compressive strength and no single core is less than 75 percent of the 28-day design compressive strength.
      d. Test results will be made in writing on the same day that tests are performed, with copies to Architect, Contractor, and precast concrete fabricator.
   3. Reports:
      a. Test reports will include the following:
         1) Project identification name and number.
         2) Date when tests were performed.
         3) Name of precast concrete fabricator.
         4) Name of concrete testing agency.
         5) Identification letter, name, and type of precast concrete units or units represented by core tests; design compressive strength; type of break; compressive strength at breaks, corrected for length-diameter ratio; and direction of applied load to core in relation to horizontal plane of concrete as placed.
   4. Patching:

a. If core test results are satisfactory and precast concrete units comply with requirements, clean and dampen core holes and solidly fill with precast concrete mix that has no coarse aggregate, and finish to match adjacent precast concrete surfaces.

D. Defective Work:
1. Architectural precast concrete units that do not comply with acceptability requirements in PCI MNL 117, including concrete strength, manufacturing tolerances, and color and texture range are unacceptable.
2. Chipped, spalled or cracked units may be repaired, if repaired units match the visual mock-up.
3. The Architect reserves the right to reject any unit if it does not match the accepted samples and visual mock-up.
4. Replace unacceptable units with precast concrete units that comply with requirements.

2.15 RELATED ITEMS (SPECIFIED ELESWHERE)

A. Cast-in-Place Concrete: Specified in elsewhere in Division 03.

B. Structural Steel for connection attachment to structural-steel framing: Specified in Section 05 12 00 or Section 05 12 10.

C. Sheet Metal Flashing and Trim: Specified in Section 07 62 00.

D. Backer Rod and Sealants: As specified in Section 07 92 13.

PART 3 - EXECUTION

3.1 EXAMINATION

A. Examine supporting structural frame or foundation and conditions for compliance with requirements for installation tolerances, true and level bearing surfaces, and other conditions affecting performance.
1. Proceed with installation only after unsatisfactory conditions have been corrected.
2. Start of installation constitutes acceptance of surfaces and conditions.

B. Do not install precast concrete units until supporting cast-in place concrete building structural framing has attained minimum allowable design compressive strength or supporting steel or other structure is structurally ready to receive loads from precast.

3.2 ERECTION

A. Perform erection under supervision of qualified superintendent.

B. Employ only skilled and experienced personnel and equipment capable of properly installing units.

C. Erect architectural precast concrete level, plumb and square within the specified allowable tolerances.

D. Connect APC units in position by bolting, welding, grouting, or as otherwise indicated on approved erection drawings.
1. Remove temporary shims, wedges, and spacers as soon as practical after connecting and/or grouting are completed.
2. Disruption of roof flashing continuity by connections is not permitted; concealment within roof insulation is acceptable.

E. Welding:
1. Protect architectural precast concrete units and bearing pads from damage by field welding or cutting operations and provide noncombustible shields as required.

2. Welds not specified shall be continuous fillet welds, using not less than the minimum fillet as specified by AWS.
3. Protective Coating Repair:
   a. Clean weld affected metal surfaces with chipping hammer followed by brushing then apply a minimum 0.004 IN thick coat of galvanized repair paint to galvanized surfaces in conformance with ASTM-A780.

F. Bolted Connections:
1. At bolted connections, use lock washers, tack welding, or other acceptable means to prevent loosening of nuts after final adjustment.

G. Grouting Connections:
1. Grout connections where required or indicated.
2. Retain grout in place until hard enough to support itself.
3. Pack spaces with stiff grout material, tamping until voids are completely filled.
4. Place grout to finish smooth, level, and plumb with adjacent concrete surfaces.
5. Promptly remove grout material from exposed surfaces before it affects finishes or hardens.

3.3 ERECTION TOLERANCES

A. Erect architectural precast concrete units level, plumb, square, and true, without exceeding the following non-cumulative erection tolerances;
1. Total deviation equal to maximum allowance specified for the structural frame.
2. Plan Location from Building Grid Datum: Plus or Minus 1/2 IN.
3. Plan Location from Centerline of Steel: Plus or Minus 1/2 IN.
4. Top Elevation from Nominal Top Elevation:
   a. Exposed Individual Panel: Plus or Minus 1/4 IN.
   b. Non-exposed Individual Panel: Plus or Minus 1/2 IN.
   c. Exposed Panel Relative to Adjacent Panel: 1/4 IN.
   d. Non-exposed Panel Relative to Adjacent Panel: 1/2 IN.
5. Support Elevation from Nominal Support Elevation: As follows:
   a. Maximum Low: 1/2 IN.
   b. Maximum High: 1/4 IN.
6. Maximum Plumb Variation:
   a. Over the Lesser of Height of Structure or 100 FT: 1 IN.
   b. Plumb in Any 10 FT of Element Height: 1/4 IN.
7. Maximum Jog in Alignment of Matching Edges: 1/4 IN.
8. Joint Face Width (governs over Joint Taper):
   a. Maximum deviation from Specified Width: Plus or Minus 3/16 IN.
   b. Step in face: 1/4 IN.
9. Maximum Joint Taper:
   a. Total: 3/8 IN.
   b. In 10 FT: 1/4 IN.
10. Maximum Jog in Alignment of Matching Faces: 1/4 IN.
11. Differential Bowing or Camber, as Erected, between Adjacent Members of Same Design: 1/4 IN.
12. Opening Height between Spandrels: Plus or Minus 1/4 IN.

3.4 JOINT SEALANTS

A. Seal architectural precast concrete work as specified in Section 07 92 13.

3.5 FIELD QUALITY CONTROL

A. Testing - General:
1. Owner will engage a qualified independent testing and inspecting agency to perform field tests and inspections.

2. Testing agency will report test results promptly and in writing to Contractor and Architect.
3. Repair or remove and replace work that does not comply with specified requirements.
4. Additional testing and inspecting, at Contractor's expense, will be performed to determine compliance of corrected work with specified requirements.

B. Field Welds:
1. Subject to visual inspections and non-destructive testing in accordance with ASTM E165 or ASTM E709.

3.6 REPAIRS

A. Repairs will be permitted provided structural adequacy of units and appearance are not impaired.

B. Replace units which exhibit damage to surfaces, finish, corners or edges which will be exposed to view after setting in place, or which is broken or cracked due to shrinkage, temperature, transportation, handling or erection.
1. When approved in writing by Architect, unit may be repaired in place.
2. Perform such work at no additional expense to Owner.

C. Acceptance of units, repaired pursuant to written approval, is contingent upon repairs being skillfully done so as to be sound, permanent, flush with adjacent surfaces and of color and texture matching similar adjoining surfaces and indicating no apparent line of demarcation between original and repaired work, when viewed from a distance of 20 FT.

D. Remove and replace other work damaged by removal of defective precast members, at no additional cost to Owner.

E. Prepare and repair damaged galvanized coatings with galvanizing repair paint according to ASTM-A780.

F. Remove and replace damaged APC units when repairs do not meet requirements.

3.7 CLEANING

A. Clean surfaces of precast concrete to be exposed to view prior to shipping.

B. Clean mortar, plaster, fireproofing, weld slag, and any other deleterious material from concrete surfaces and adjacent materials immediately.

C. Clean exposed surfaces of precast concrete units after erection and completion of joint treatment to remove weld marks, other markings, dirt, and stains.
1. Protect other work from staining or damage due to cleaning operations.
2. Coordinate cleaning of precast units with cleaning of glass and other work.
3. Pre-clean soiled surfaces with detergent and water, using stiff fiber brushes and sponges, and rinse with clean water.
4. Perform cleaning procedures using product specified in Section 04 05 10 or as otherwise recommended by precast concrete fabricator.
   a. Do not use cleaning materials or processes that could change the appearance of exposed concrete finishes or damage adjacent materials.
5. Start at top of building and proceed downward.
6. Leave precast units clean, free of traces of cleaning compound and with joints watertight.

END OF SECTION

SECTION 04 23 00

REINFORCED CONCRETE MASONRY

PART 1- GENERAL

1.1 SUMMARY

A. The extent of reinforced concrete masonry work is shown on drawings.

B. Requirements of Section “Unit Masonry” apply to work of this section.

C. Clay bricks, glass blocks and other masonry work is shown on architectural drawings and other specification section.

1.2 SUBMITTALS

A. Mill Certificates: Submit steel producer's certificates of mill analysis, tensile and bend tests for reinforcing steel as required for project.

B. Shop Drawings: Submit shop drawings for fabrication, bending, and placement of reinforcement bars. Comply with ACI 315 "Manual of Standard Practice for Detailing Reinforced Concrete Structures". Show bar schedules, diagrams of bent bars, stirrup spacing, lateral ties and other arrangements and assemblies as required for fabrication and placement of reinforcement for unit masonry work.

1.3 QUALITY ASSURANCE

A. Fire Performance Characteristics: Where indicated, provide materials and construction that are Identical to those assemblies whose fire endurance has been previously determined by testing in compliance with ASTM E 119 by a recognized testing and inspecting organization, or by other means, as acceptable to authority having jurisdiction.

B. Single Source Responsibility for Masonry Units: Obtain exposed masonry units of uniform texture and color, or a uniform blend within the ranges accepted for these characteristics, from one manufacturer for each different product required for continuous surface or visually related surfaces.

C. Single Source Responsibility for Mortar Materials: Obtain mortar ingredients of uniform quality, including color for exposed masonry, from one manufacturer for each cementitious component and from one source of producer for each aggregate. Job site mixing of mortar will not be allowed.

1.4 PROJECT CONDITIONS

A. Protection of Work: During erection of masonry work, cover top of walls with heavy waterproof sheeting at end of each day’s work. Cover partially completed structures when work is not in progress.

B. Extend cover a minimum of 24 inches down both sides and hold cover securely in place.

C. Do not apply uniform floor or roof loads for at least twenty-four (24) hours after building masonry walls or columns.

D. Do not apply concentrated loads for at least three (3) days after building masonry walls or columns.

E. Staining: Prevent grout or mortar or soil from staining the face of masonry to be left exposed or painted. Remove immediately grout or mortar in contact with such masonry.

F. Protect base of walls from rain-splashed mud and mortar splatter by means of coverings spread on ground and over wall surface.

G. Protect seals, ledges and projections from droppings of mortar.

H. Cold Weather Protection:

1. Do not lay masonry units that are wet or frozen.
2. Remove any ice or snow formed on masonry bed by carefully applying heat until top surface is dry to the touch.
3. Follow procedures in ACI 530 for laying masonry units when temperature falls below 40 degrees F.

PART 2 - PRODUCTS

2.1 GENERAL

A. Refer to Section "Unit Masonry" for masonry materials and accessories not included in this section.

B. Concrete Blocks: Provide units complying with characteristics indicated below for Grade, Type, face size, exposed face and, under each form included, for weight classification.

Grade N.

C. Size: Manufacturer's standard units with nominal face dimensions of 16" long x 8" high (15-5/8" x 7-5/8" actual dimensions) x thickness indicated.

D. Type I, moisture-controlled units.

E. Exposed Faces: Manufacturer's standard color and texture, unless otherwise indicated.

F. Additional types of masonry blocks as required by Architectural drawings.

2.2 MORTAR AND GROUT MATERIALS

A. Portland Cement: ASTM C150, type I, except Type III may be used for cold weather construction. Provide natural color or white cement as required to produce required mortar color.

B. Masonry Cement: ASTM C 91.

1. For colored pigmented mortars, use premixed colored masonry cements of formulation required to produce color indicated or, if not indicated, as selected from manufacturer's standard formulations.
2. For colored aggregate mortars use masonry cement of natural color or white as required to produce mortar color indicated.

C. Hydrated Lime: ASTM C 207, Type S.

D. Aggregate for Mortar: ASTM C 144, except for joints less than ¼" use aggregate graded with one-

hundred percent passing the No. 16 sieve.

E. Aggregate for Grout: ASTM C 404.
F. Water: Clean and potable.

2.3 REINFORCEMENT BARS

A. Provide deformed bars to following grades complying with ASTM A 615, except as otherwise indicated.

1. Provide Grade 40 for bars #3 and #4, except as otherwise indicated.
2. Provide Grade 60 for bars No. 5 and larger, except as otherwise indicated.
3. Where No. 2 bars are shown, provide plain, round, carbon steel bars, ASTM A 675, Grade 80.

B. Shop-fabricate reinforcement bars which are shown to be bent or hooked.

C. Joint Reinforcement: Provide welded-wire units prefabricated with deformed continuous side rods and plain cross rods into straight lengths not less than 10 feet, with prefabricated corner and tee units, and complying with requirements indicated below:

1. Width: Fabricate joint reinforcement in units with widths of approximately 2 inches less than nominal width of walls and partitions as required to provide mortar coverage of not less than 5/8” on joint faces exposed to exterior and ½” elsewhere.
2. Wire Size for Side Rods: 0.1483” diameter.
3. Wire Size for Cross Rods: 0.1483” diameter.
4. Truss design with perpendicular cross rods spaced not more than 16” o.c.

PART 3 - EXECUTION

3.1 PLACING REINFORCEMENT

A. GENERAL

1. Clean reinforcement of loose rust, mill scale, earth, ice or other materials which will reduce bond to mortar or grout. Do not use reinforcement with kinks or bends not shown on drawings or final shop drawings, or bars with reduced cross-section due to excessive rusting or other causes.
2. Position reinforcing accurately at the spacing indicated. Support secure vertical bars against displacement. Horizontal reinforcing may be placed as the masonry work progresses. Where vertical bars are shown in close proximity provide a clear distance between bars of not less than the nominal bar diameter or 1 inch, whichever is greater.
3. For columns, piers and pilasters, provide a clear distance between vertical bars as indicated, but not less than 1-1/2 times the nominal bar diameter or 1-1 1/2", whichever is greater. Provide lateral ties as indicated.
4. Splice reinforcement bars where shown; do not splice at other points unless acceptable to the Engineer. Provide lapped splices, unless otherwise indicated. In splicing vertical bars or attaching to dowels, lap ends, place in contact and wire tie.
5. Provide not less than minimum lap shown, or if not shown, as required by governing code.
6. Weld splices where indicated. Comply with the requirements of AWS D1.4 for welding materials and procedures.
7. Reinforcement in intermediate bond beams shall be terminated at wall control/expansion joints. At the roof level, the reinforcement and bond beam shall be continuous to serve as the chord of the diaphragm.

8. Embed metal ties in mortar joints as work progresses, with a minimum mortar cover of 5/8" on exterior face of walls and 1/2" at other locations.
9. Embed prefabricated horizontal joint reinforcement as the work progresses, with a minimum cover of 5/8" on exterior face of walls and 1/2" at other locations. Lap units not less than 6" at ends.
10. Use prefabricated "L" and "T" units to provide continuity at corners and intersections. Cut and bend units as recommended by manufacturer for continuity at returns, offsets, column fireproofing, pipe enclosures and other special conditions.
11. Anchoring: Anchor reinforced masonry work to supporting structure as indicated. Anchor reinforced masonry walls to non-reinforced masonry where they intersect.

3.2 INSTALLATION

A. Refer to Section "Unit Masonry" for general installation requirements to unit masonry.

B. Temporary Formwork: Provide formwork and shores as required for temporary support of reinforced masonry elements.

C. Construct formwork to conform to shape, line and dimensions shown. Make sufficiently tight to prevent leakage of mortar grout, or concrete (if any). Brace, tie and support as required to maintain portion and shape during construction and curing of reinforced masonry.

D. Do not remove forms and shores until reinforced masonry members have hardened sufficiently to carry their own weight and all other reasonable temporary loads that may be placed on them during construction.

E. Allow not less than the following minimum time to elapse after completion of members before removing shores or forms, provided suitable curing conditions have been obtained during the curing period.

10 days for beams & lintels.
7 days for slabs.
7 days for reinforced masonry soffits.

F. Do not wet concrete masonry units (CMU).

G. Lay CMU units with full-face shell mortar beds. Fill vertical head joints (end joints between units) solidly with mortar from face of unit to a distance behind face equal to not
less than the thickness of longitudinal face shells. Solidly bed cross-webs of starting courses in mortar. Maintain head and bed joint widths shown, or if not shown, provide 3/8" joints.

H. Walls:

1. Pattern Bond: Lay CMU wall units in 1/2 running bond with vertical joints in each course centered on units in courses above and below, unless otherwise indicated. Bond and interlock each course at corners and intersections. Use special-shaped units where shown, and as required for corners, jambs, sash, control joints, lintels, bond beams and other special conditions.
2. Maintain vertical continuity of core or cell cavities, which are to be reinforced and grouted, to provide minimum clear dimensions indicated and to provide minimum clearance and grout coverage for vertical reinforcement bars. Keep cavities free of mortar. Solidly bed webs in mortar where adjacent to reinforced cores or cells.
3. Where horizontal reinforced beams (bond beams) are shown, use special units or modify regular units to allow for placement of continuous reinforcement bars. Place small mesh expanded metal lath or wire screening in mortar joints under bond beam courses over cores

or cells of non-reinforced vertical cells, or provide units with solid bottoms.

a. Option: where all vertical cores are not shown to be grouted, Contractor may select to fill all vertical cores with grout. In which case, requirements for mortar bedding of cross-webs and closing of core spaces below bond beams do not apply.

b. Reinforcement in bond beam does not extend past wall control joint, except at the roof bearing location to complete the diaphragm chord.

I. Columns, Piers and Pilasters:

1. Use CMU units of the size, shape and number of vertical core spaces shown. If not shown, use units which provide minimum clearances and grout coverage for number and size of vertical reinforcement bars shown.
2. Provide pattern bond shown, or if not shown, alternate head joints in vertical alignment.
3. Where bonded pilaster construction is shown, lay wall and pilaster units together to maximum pour height specified.

3.3 GROUTING

A. Use "Fine Grout" per ASTM C 476 for filling spaces less than 4" in one or both horizontal directions.

B. Use "Coarse Grout" per ASTM C 476 for filling 4" of spaces or larger in both horizontal directions.

C. Grouting Technique: At the Contractor's option, use either low-lift or high-lift grouting techniques subject to requirements which follow.

1. Low-Lift Grouting:

a. Provide minimum clear dimension of 2" and clear area of 8 sq. in. in vertical cores to be grouted.

b. Place vertical reinforcement prior to laying of CMU. Extend above elevation of maximum pour height as required for splicing. Support in position indicated in details at vertical intervals not exceeding 192 bar diameters or 10 feet. Laps shall be tied and all reinforcement shall be maintained at center of wall during grouting unless otherwise noted.

c. Lay CMU to maximum pour height. Do not exceed 5' height, or if bond beam occurs below 5' height stop pour at course below bond beam.

d. Pour grout using chute or container with spout. Rod or vibrate grout during placing. Place grout continuously; do not interrupt pouring of grout for more than one hour. Terminate grout pours 1-1/2" below top course of pour.

e. Bond Beams: Stop grout in vertical cells 1-1/2" below bond beam course. Place horizontal reinforcing in bond beams; lap at corners and intersections as shown. Place grout in bond beam course before filling vertical cores above bond beam.

2. High-Lift Grouting:

a. Do not use high-lift grouting technique for grouting of CMU unless minimum cavity dimension is 3" and 10 sq. in., respectively.

b. Provide cleanout holes in first course at all vertical cells which are to be filled with

grout.

c. Use units with one face shell removed and provide temporary supports for units above, or use header units with concrete brick supports, or cut openings in one face shell.

d. Construct masonry to full height of maximum grout pour specified, prior to placing grout.

e. Limit grout lifts to a maximum height of 5' and grout pour to a maximum height of 24', for single wythe hollow concrete masonry walls, unless otherwise indicated.

f. Place vertical reinforcement before grouting. Place before or after laying masonry units, as required by job conditions. Tie vertical reinforcement to dowels at base of masonry where shown and thread CMU over or around reinforcement. Support vertical reinforcement at intervals not exceeding 192 bar diameters or 10'.

D. Where individual bars are placed after laying masonry, place wire loops extending into cells as masonry is laid and loosen before mortar sets. After insertion of reinforcing bar, pull loops and bar to proper position and tie free ends.

E. Where reinforcement is prefabricated into cage units before placing, fabricate units with vertical reinforcement bars and lateral ties of the size and spacing indicated.

F. Place horizontal beam reinforcement as the masonry units are laid.

G. Embed lateral tie reinforcement in mortar joints where indicated. Place as masonry units are laid, at vertical spacing shown.

1. Where lateral ties are shown in contact with vertical reinforcement bars, embed additional lateral tie reinforcement in mortar joints. Place as shown, or if not shown, provide as required to prevent grout blowout or rupture of CMU face shells, but provide not less than No. 2 bars or 8-gage wire ties spaces 16” on centers for members with 20 inches or less side dimensions, and 8” on centers for members with side dimensions exceeding 20 inches.

H. Preparation of Grout Spaces: Prior to grouting, inspect and clean grout spaces. Remove dust, dirt, mortar droppings, loose pieces of masonry and other foreign materials from grout spaces. Clean reinforcing and adjust to proper position. Clean top surface of structural members supporting masonry to ensure bond. After final cleaning and inspection, close cleanout holes and brace closures to resist grout pressures.

Do not place grout until entire height of masonry to be grouted has attained sufficient strength to resist displacement of masonry units and breaking of mortar bond. Install shores and bracing, if required, before starting grouting operations.

I. Place grout by pumping into grout spaces unless alternate methods are acceptable to the Engineer.

1. Limit grout pours to sections which can be completed in one working day with not more than one hour interruption of pouring operation. Place grout in lifts which do not exceed 5'. Allow not less than 30 minutes, nor more than one hour between lifts of a given pour. Rod or vibrate each grout lift during pouring operation.
2. Place grout in lintels or beams over openings in one continuous pour.
3. Where bond beam occurs more than one course below top of pour, fill bond beam course to within 1" of vertically reinforced cavities, during construction of masonry.

4. When more than one pour is required to complete a given section of masonry, extend reinforcement beyond masonry as required for splicing. Pour grout to within 1-1/2" of top course of first pour. After grouted masonry is cured, lay masonry units and place reinforcement for second pour section before grouting. Repeat sequence if more pours are required.

3.4 QUALITY CONTROL TESTING DURING CONSTRUCTION

A. Concrete Masonry Unit Tests: For each type, class and grade of concrete masonry units indicated, test units by method of sampling and testing in accordance with ASTM C 140.

B. MortarTests: For each type indicated, test mortar by methods of sampling and testing in accordance with ASTM C 780. Conduct test no less frequently than that required to evaluate mortar used to install each increment of masonry units indicated above from which samples are taken for testing.

C. Grout Tests: For each type indicated, test grout by methods of sampling and testing in accordance with ASTM C 1019. Conduct grout test at least once everyday when walls are being grouted.

D. Report test results in writing in form specified under each test method, to Architect, Owner and Contractor, on same day tests are made.

E. Evaluation of Quality Control Tests: Masonry work, in absence of other indications of non-compliance with requirement, will be considered satisfactory if results from construction quality control tests comply with minimum requirement indicated.

3.5 REPAIR, POINTING AND CLEANING

A. Remove and replace masonry units which are loose, chipped, broken, stained or otherwise damaged, or if units do not match adjoining units as intended. Provide new units to match adjoining units and install in fresh mortar or grout, pointed to eliminate evidence of replacement.

B. Pointing: During the tooling of joints, enlarge any voids or holes, except weep holes, and completely fill with mortar. Point-up all joints including corners, openings, and adjacent work to provide a neat, uniform appearance, prepared for application of sealants.

C. Final Cleaning: After mortar is thoroughly set and cured, clean masonry as follows:

1. Remove large mortar particles by hand with wooden paddles and non-metallic scrape hoes or chisels.
2. Saturate wall surfaces with water prior to application of cleaners; remove cleaners promptly by rinsing thoroughly with clear water.
3. Clean concrete masonry units to comply with masonry manufacturer’s directions and applicable to NCMA “Tek” bulletins.

D. Protection: Provide final protection and maintain conditions in a manner to ensure concrete masonry work without damage and deterioration at time of substantial completion.

END OF SECTION

SECTION 04410
ROUGH STONE

PART 1 GENERAL

1.01 SECTION INCLUDES

A. Architectural native rock walls.
B. Metal anchors, mortar, and joint pointing.
C. Joint sealants.

1.02 RELATED SECTIONS

A. Section 01400 - Quality Control Services
B. Section 07900 - Joint Sealers: Sealant for perimeter, control, and expansion joints.

1.03 REFERENCES

A. ASTM C780 - Preconstruction and Construction Evaluation of Mortars for Plain and Reinforced Unit Masonry.
B. ASTM C1019 - Method of Sampling and Testing Grout.
C. IMIAC (International Masonry Industry All-Weather Council) - Recommended Practices and Guide Specifications for Cold Weather Masonry Construction.
D. City of El Paso Subdivision Standards.

1.07 SUBMITTALS

A. Submit two samples illustrating minimum and maximum stone sizes, color range and texture, mortar color and markings.

1.08 QUALIFICATIONS

A. Installer: Company specializing in performing the work of this section with minimum three (3) years documented experience.

1.09 MOCKUP

A. Provide mockup of rough stone wall and pavers under provisions of Section 01400.
B. Construct rough stone wall mockup varying size of stone, cut shape, grout and joints, 5 feet long by required width and height.
C. Locate where directed by architect.
D. Mockup may remain as part of the Work.

1.10 PRE-INSTALLATION CONFERENCE

A. Convene one week prior to commencing work of this section, under provisions of Section 01039.

1.11 ENVIRONMENTAL REQUIREMENTS

A. During temporary storage on site, at the end of working day, or during rainy weather, cover stone work exposed to weather with non-staining waterproof coverings, securely anchored.

1.12 SEQUENCING

B. Sequence work to coordinate the installation of stone work with installation of adjacent construction / activities.

PART 2 PRODUCTS

2.02 STONE

A. Stone:
1. Rock walls and retaining walls: Heuco Stone

B. Type: Color, surface finish, grade; free of defects as selected by achitect

C. Nominal Thickness:
1. Rock walls: 12 inch.

D. Nominal Face Size:
1. Rock Walls: 12 x 12 inch.

2.03 MORTAR

A. Mortar: ASTM C270 using Proportion specifications; with masonry cement of graycolor.
B. Water: Clean and potable.
C. Admixtures: Not permitted.
D. Mortar joints for rough stone pavers are to be 1/2” deep and not to exceed 1/2” width.

2.04 ACCESSORIES

A. Weeps: 1/2" pvc pipe schedule 20.
B. Joint Filler: Closed cell foam 1/2" size.
I. Sealant: type specified in Section 07900; color to match stone color.
K. Cleaning Solution: Type which will not harm stone, joint materials, or adjacent surfaces.

2.05 MORTAR MIX

A. Setting Mortar: Type S using the Property Method.
B. Pointing Mortar: Type N using the Property Method.
C. Add mortar color in accordance with manufacturer's instructions. Ensure uniformity of mix and coloration.
D. Do not use anti-freeze compounds to lower the freezing point of mortar.
E. If water is lost by evaporation, re-temper only within two hours of mixing.
F. Use mortar within two hours after mixing at temperatures of 80 degrees F (26 degrees C), or two-and-one-half hours at temperatures under 50 degrees F (10 degrees C).

2.06 STONE FABRICATION

A. Form stone corners to irregular joint profile. Clean jagged corners from stone in preparation for setting.
B. Slope exposed top surfaces of stone and horizontal sill surfaces for shedding water.
D. Coat back surface of stone with bituminous coating on surfaces not in contact with mortar. Allow coating to cure.

2.07 MIX TESTS

A. Test mortar and grout in accordance with Section 01400.
B. Testing of Mortar Mix: In accordance with ASTM C780.

C. Test mortar mix for compressive strength, consistency, mortar aggregate ratio, water content, air content and splitting tensile strength.
D. Testing of Grout Mix: In accordance with ASTM C1019.
E. Test mortar mix for compressive strength and slump.

PART 3 EXECUTION

3.01 EXAMINATION

A. Verify that support work and site conditions are ready to receive work of this section.
B. Verify that items built-in under other sections are properly located and sized.

3.02 PREPARATION

A. Establish lines, levels, and coursing. Protect from disturbance.
B. Verify that items built-in under other sections are properly located and sized.
C. Clean stone prior to erection. Do not use wire brushes or implements which can mark or damage exposed surfaces.

3.03 INSTALLATION

A. Cut stone at site to produce clean faces.
C. Size stone units to fit dimensions and perimeter conditions.
D. Wet absorptive stone in preparation for placement to minimize moisture suction from mortar.
E. Arrange stone pattern to provide color uniformity, visual variations, blend of stone unit sizes, and constant joint sizes throughout.
F. Fill dowel holes in stone units with mortar.
H. Set stone in full mortar setting bed to fully support stone over bearing surface.
I. Shore up units until setting bed will maintain panel in position without movement.
J. Rake out mortar joints 3/4 inch for walls, and brush joints clean to accommodate pointing mortar.
M. Install weeps horizontally; immediately bottom of walls. Do not permit mortar accumulation in cavity space.
N. Rake out joints to accommodate sealant and joint filler at control.

3.04 CLEANING
A. Remove excess mortar and sealant upon completion of work.
B. Clean soiled surfaces with cleaning solution.
C. Use non-metallic tools in cleaning operations.

END OF SECTION

SECTION 051200

STRUCTURAL STEEL FRAMING

PART 1 - GENERAL

1.1 RELATED DOCUMENTS

A. Drawings and general provisions of the Contract, including General and Supplementary Conditions and Division 01 Specification Sections, apply to this Section.

1.2 SUMMARY

A. Section Includes:

1. Structural steel.
2. Prefabricated building columns.
3. Grout.

1.3 QUALITY ASSURANCE

A. Fabricator Qualifications: A qualified fabricator that participates in the AISC Quality Certification Program and is designated an AISC-Certified Plant, Category STD.

B. Installer Qualifications: A qualified installer who participates in the AISC Quality Certification Program and is designated an AISC-Certified Erector.

C. Shop-Painting Applicators: Qualified according to AISC's Sophisticated Paint Endorsement or SSPC-QP 3, "Standard Procedure for Evaluating Qualifications of Shop Painting Applicators."

D. Welding Qualifications: Qualify procedures and personnel according to AWS D1.1/D1.1M, "Structural Welding Code - Steel."

1. Welders and welding operators performing work on bottom-flange, demand-critical welds shall pass the supplemental welder qualification testing, as required by AWS D1.8. FCAW-S and FCAW-G shall be considered separate processes for welding personnel qualification.

E. Comply with applicable provisions of the following specifications and documents:

1. AISC 303.
2. AISC 341 and AISC 341s1.
3. AISC 360.
4. RCSC's "Specification for Structural Joints Using ASTM A 325 or A 490 Bolts."

F. Preinstallation Conference: Conduct conference at Project site.

PART 2 - PRODUCTS

2.1 STRUCTURAL-STEEL MATERIALS

A. Recycled Content of Steel Products: Provide products with an average recycled content of steel products so postconsumer recycled content plus one-half of preconsumer recycled content is not less than 25 percent.

B. Recycled Content of Steel Products: Provide products with an average recycled content of steel products so postconsumer recycled content plus one-half of preconsumer recycled content is not less than the following:

1. W-Shapes: 60 percent.
2. Channels, Angles: 60 percent.
3. Plate and Bar: 25 percent.
4. Cold-Formed Hollow Structural Sections: 25percent.
5. Steel Pipe: 25 percent.
6. All Other Steel Materials: 25 percent.

C. W-Shapes: ASTM A 992, Grade.

D. Channels, Angles: ASTM A 36.

E. Plate and Bar: ASTM A 36.

F. Corrosion-Resisting Structural-Steel Shapes, Plates, and Bars: ASTM A 588/A 588M, Grade 50.

G. Cold-Formed Hollow Structural Sections: ASTM A 500, Grade B, structural tubing.

H. Corrosion-Resisting Cold-Formed Hollow Structural Sections: ASTM A 847/A 847M, structural tubing.

I. Steel Pipe: ASTM A 53, Type E or S, Grade B.

J. Steel Castings: ASTM A 216, Grade WCB with supplementary requirement S11.

K. Steel Forgings: ASTM A 668.

L. Welding Electrodes: Comply with AWS requirements.

2.2 BOLTS, CONNECTORS, AND ANCHORS

A. High-Strength Bolts, Nuts, and Washers: ASTM A 325,Type 1, heavy-hex steel structural bolts; hardened carbon-steel washers; all with plain finish.

1. Direct-Tension Indicators: ASTM F 959, Type 325, compressible-washer type with plain finish.

B. High-Strength Bolts, Nuts, and Washers: ASTM A 490, Type 1, heavy-hex steel structural bolts; ASTM A 563, Grade DH, heavy-hex carbon-steel nuts; and ASTM F 436, Type 1, hardened carbon-steel washers with plain finish.

1. Direct-Tension Indicators: ASTM F 959, Type 490, compressible-washer type with plain finish.

C. Tension-Control, High-Strength Bolt-Nut-Washer Assemblies: ASTM F 1852, Type 1, heavy-hex, round head assemblies consisting of steel structural bolts with splined ends, heavy-hex carbon-steel nuts, and hardened carbon-steel washers.

D. Shear Connectors: ASTM A 108, Grades 1015 through 1020, headed-stud type, cold-finished carbon steel; AWS D1.1, Type B.

E. Unheaded Anchor Rods: ASTM F 1554, Grade 36.

1. Configuration: Hooked.
2. Nuts: ASTM A 563 heavy-hex carbon steel.
3. Plate Washers: ASTM A 36 carbon steel.
4. Washers: ASTM F 436, Type 1, hardened carbon steel.
5. Finish: Plain.

F. Headed Anchor Rods: ASTM F 1554, Grade 36, straight.

1. Nuts: ASTM A 563heavy-hex carbon steel.
2. Plate Washers: ASTM A 36 carbon steel.
3. Washers: ASTM F 436, Type 1, hardened carbon steel.
4. Finish: Plain.

G. Threaded Rods: ASTM A 36.

1. Nuts: ASTM A 563 heavy-hex carbon steel.
2. Washers: ASTM F 436 type 1, hardened carbon steel.
3. Finish: [Plain.

H. Clevises and Turnbuckles: Made from cold-finished carbon steel bars, ASTM A 108, Grade 1035.

I. Eye Bolts and Nuts: Made from cold-finished carbon steel bars, ASTM A 108, Grade 1030.

J. Sleeve Nuts: Made from cold-finished carbon steel bars, ASTM A 108, Grade 1018.

K. Structural Slide Bearings: Low-friction assemblies, of configuration indicated, that provide vertical transfer of loads and allow horizontal movement perpendicular to plane of expansion joint while resisting movement within plane of expansion joint.

1. Manufacturers: Subject to compliance with requirements, provide products by one of the following available manufacturers offering products that may be incorporated into the Work include, but are not limited to, the following:
2. Basis-of-Design Product: Subject to compliance with requirements, provide comparable product by one of the following:

    a. Amscot Structural Products Corp.
    b. Fluorocarbon Company Limited.
    c. R.J. Watson Bridge & Structural Engineered Systems.
    d. Seismic Energy Products, L.P.

3. Coefficient of Friction: Not more than 0.04.

4. Design Load: Not less than 2,000 psi.
5. Total Movement Capability: 2 inches.

2.3 GROUT

A. Metallic, Shrinkage-Resistant Grout: ASTM C 1107, factory-packaged, metallic aggregate grout, mixed with water to consistency suitable for application and a 30-minute working time.

B. Nonmetallic, Shrinkage-Resistant Grout: ASTM C 1107, factory-packaged, nonmetallic aggregate grout, noncorrosive and nonstaining, mixed with water to consistency suitable for application and a 30-minute working time.

2.4 FABRICATION

A. Structural Steel: Fabricate and assemble in shop to greatest extent possible. Fabricate according to AISC's "Code of Standard Practice for Steel Buildings and Bridges" and AISC 360.

B. Thermal Cutting: Perform thermal cutting by machine to greatest extent possible.

1. Plane thermally cut edges to be welded to comply with requirements in AWS D1.1.

C. Bolt Holes: Cut, drill or punch standard bolt holes perpendicular to metal surfaces.

D. Finishing: Accurately finish ends of columns and other members transmitting bearing loads.

E. Cleaning: Clean and prepare steel surfaces that are to remain unpainted according to SSPC-SP 1, "Solvent Cleaning."

F. Shear Connectors: Prepare steel surfaces as recommended by manufacturer of shear connectors. Use automatic end welding of headed-stud shear connectors according to AWS D1.1/D1.1M and manufacturer's written instructions.

G. Steel Wall-Opening Framing: Select true and straight members for fabricating steel wall-opening framing to be attached to structural steel. Straighten as required to provide uniform, square, and true members in completed wall framing.

H. Welded Door Frames: Build up welded door frames attached to structural steel. Weld exposed joints continuously and grind smooth. Plug-weld fixed steel bar stops to frames. Secure removable stops to frames with countersunk machine screws, uniformly spaced not more than 10 inches o.c. unless otherwise indicated.

I. Holes: Provide holes required for securing other work to structural steel and for other work to pass through steel framing members.

2.5 SHOP CONNECTIONS

A. High-Strength Bolts: Shop install high-strength bolts according to RCSC's "Specification for Structural Joints Using ASTM A 325 or A 490 Bolts" for type of bolt and type of joint specified.

1. Joint Type: Snug tightened.

B. Weld Connections: Comply with AWS D1.1 and AWS D1.8 for tolerances, appearances, welding procedure specifications, weld quality, and methods used in correcting welding work.

1. Assemble and weld built-up sections by methods that will maintain true alignment of axes without exceeding tolerances in AISC 303 for mill material.

C. Fire-Resistance Ratings: Provide prefabricated building column listed and labeled by a testing and inspecting agency acceptable to authorities having jurisdiction for ratings indicated, based on testing according to ASTM E 119.

1. Fire-Resistance Rating: As indicated.

2.6 SOURCE QUALITY CONTROL

A. Testing Agency: Owner will engage an independent testing and inspecting agency to perform shop tests and inspections and prepare test reports.

1. Provide testing agency with access to places where structural-steel work is being fabricated or produced to perform tests and inspections.

B. Correct deficiencies in Work that test reports and inspections indicate does not comply with the Contract Documents.

C. Bolted Connections: Shop-bolted connections will be tested and inspected according to RCSC's "Specification for Structural Joints Using ASTM A 325 or A 490 Bolts."

D. Welded Connections: In addition to visual inspection, shop-welded connections will be tested and inspected according to AWS D1.1/D1.1M and the following inspection procedures, at testing agency's option:

1. Liquid Penetrant Inspection: ASTM E 165.
2. Magnetic Particle Inspection: ASTM E 709; performed on root pass and on finished weld. Cracks or zones of incomplete fusion or penetration will not be accepted.
3. Ultrasonic Inspection: ASTM E 164.
4. Radiographic Inspection: ASTM E 94.

E. In addition to visual inspection, shop-welded shear connectors will be tested and inspected according to requirements in AWS D1.1/D1.1M for stud welding and as follows:

1. Bend tests will be performed if visual inspections reveal either a less-than-continuous 360-degree flash or welding repairs to any shear connector.
2. Tests will be conducted on additional shear connectors if weld fracture occurs on shear connectors already tested, according to requirements in AWS D1.1/D1.1M.

PART 3 - EXECUTION

3.1 EXAMINATION

A. Verify, with steel Erector present, elevations of concrete- and masonry-bearing surfaces and locations of anchor rods, bearing plates, and other embedments for compliance with requirements.

1. Prepare a certified survey of bearing surfaces, anchor rods, bearing plates, and other embedments showing dimensions, locations, angles, and elevations.

B. Proceed with installation only after unsatisfactory conditions have been corrected.

3.2 PREPARATION

A. Provide temporary shores, guys, braces, and other supports during erection to keep structural steel secure, plumb, and in alignment against temporary construction loads and loads equal in intensity to design loads. Remove temporary supports when permanent structural steel, connections, and bracing are in place unless otherwise indicated.

1. Do not remove temporary shoring supporting composite deck construction until cast-in-place concrete has attained its design compressive strength.

3.3 ERECTION

A. Set structural steel accurately in locations and to elevations indicated and according to AISC 303 and AISC 360.

B. Base Bearing and Leveling Plates: Clean concrete- and masonry-bearing surfaces of bond-reducing materials, and roughen surfaces prior to setting plates. Clean bottom surface of plates.

C. Maintain erection tolerances of structural steel within AISC's "Code of Standard Practice for Steel Buildings and Bridges."

D. Align and adjust various members that form part of complete frame or structure before permanently fastening. Before assembly, clean bearing surfaces and other surfaces that will be in permanent contact with members. Perform necessary adjustments to compensate for discrepancies in elevations and alignment.

E. Splice members only where indicated.

F. Do not use thermal cutting during erection unless approved by Architect. Finish thermally cut sections within smoothness limits in AWS D1.1.

G. Do not enlarge unfair holes in members by burning or using drift pins. Ream holes that must be enlarged to admit bolts.

H. Shear Connectors: Prepare steel surfaces as recommended by manufacturer of shear connectors. Use automatic end welding of headed-stud shear connectors according to AWS D1.1/D1.1M and manufacturer's written instructions.

3.4 FIELD CONNECTIONS

A. High-Strength Bolts: Install high-strength bolts according to RCSC's "Specification for Structural Joints Using ASTM A 325 or A 490 Bolts" for type of bolt and type of joint specified.

1. Joint Type: Snug tightened.

B. Weld Connections: Comply with AWS D1.1and D1.8 for tolerances, appearances, welding procedure specifications, weld quality, and methods used in correcting welding work.

1. Comply with AISC 303 and AISC 360 for bearing, alignment, adequacy of temporary connections, and removal of paint on surfaces adjacent to field welds.
2. Remove backing bars or runoff tabs where indicated, back gouge, and grind steel smooth.
3. Assemble and weld built-up sections by methods that will maintain true alignment of axes without exceeding tolerances in AISC's "Code of Standard Practice for Steel Buildings and Bridges" for mill material.

3.5 PREFABRICATED BUILDING COLUMNS

A. Install prefabricated building columns to comply with AISC 360, manufacturer's written recommendations, and requirements of testing and inspecting agency that apply to the fire-resistance rating indicated.

3.6 FIELD QUALITY CONTROL

A. Testing Agency: Owner will engage a qualified independent testing and inspecting agency to inspect field welds and high-strength bolted connections.

B. Bolted Connections: Bolted connections will be tested and inspected according to RCSC's "Specification for Structural Joints Using ASTM A 325 or A 490 Bolts."

C. Welded Connections: Field welds will be visually inspected according to AWS D1.1/D1.1M.

1. In addition to visual inspection, field welds will be tested and inspected according to AWS D1.1/D1.1M and the following inspection procedures, at testing agency's option:

D. In addition to visual inspection, test and inspect field-welded shear connectors according to requirements in AWS D1.1/D1.1M for stud welding:

E. Correct deficiencies in Work that test reports and inspections indicate does not comply with the Contract Documents.

3.7 REPAIRS AND PROTECTION

A. Galvanized Surfaces: Clean areas where galvanizing is damaged or missing and repair galvanizing to comply with ASTM A 780.

1. ALL EXPOSED EMBED PLATES AND CONNECTION PIECES SHALL BE Hot DIP GALVANIZED. MARKS SCRATCHES AND WELDS SHALL BE COATED WITH ZINC RICH REPAIR COATING.
2. Galvanize structural steel members to ASTM A123/A123M or ASTM A 153/A 153M when applicable; provide minimum 1.25oz/sq ft galvanized coating. Reference A143/A143M for safeguarding against embrittlement.

B. Touchup Painting: Immediately after erection, clean exposed areas where primer is damaged or missing and paint with the same material as used for shop painting to comply with SSPC-PA 1 for touching up shop-painted surfaces.

C. Touchup Painting: Cleaning and touchup painting are specified in Division 09 painting Sections.

END OF SECTION

SECTION 05 12 50
ARCHITECURALLY EXPOSED STRUCTURAL STEEL

PART 1 – GENERAL

1.1 RELATED DOCUMENTS

A. Drawings and general provisions of the Contract, including General and Supplementary Conditions and Division 1 Specification Sections, apply to the Section.

1.2 SUMMARY

A. This Section includes requirements regarding the appearance and surface preparation of Architecturally Exposed Structural Steel. (AESS) Refer to division 5 section 'Structural Steel' for all other requirements regarding steel work not in cluded in this section. This section applies to any members noted on Architectural [and Structural] drawings as AESS.[and in the areas defined as AESS below]

B. Related Sections: The following Sections contain requirements that relate to this Section:

1. Division 1 Section "Quality Control" for independent testing agency procedures and administrative requirements.

2. Division 5 Section "Structural Steel"

3. Division 5 Section "Steel Joists"

4. Division 5 Section "Metal Decking" for erection requirements relating to exposed steel decking and its connections

5. Division 5 Section “Metal Fabrications” for loose steel bearing plates and miscellaneous steel fram ing.

6. Division 9 Section “Special Coatings” for finish coat requirements and coordination with primer and surface preparation specified in this section.

7. Division 9 Section "Painting" for finish coat requirements and coordination with primer and surface preparation specified in this section.

1.3 SUBMITTALS

A. General: Submit each item below according to the Conditions of the Contract and Division 1 Specification Sections.

B. Product Data for each type of product specified.

C. Shop Drawings detailing fabrication of AESS components.

1. Provide erection drawings clearly indicating which members are considered as AESS members.

2. Include details that clearly identify all of the requirements listed in sections 2.3 "Fabrication " and 3.3 "Erection" of this specification. Provide connections for exposed AESS consistent with concepts shown on the architectural or structural drawings.

3. Indicate welds by standard AWS symbols, distinguishing between shop and field welds, and show size, length and type of each weld. Identify grinding, finish and profile of welds as defined herein.

4. Indicate type, size, finish and length of bolts, distinguishing between shop and field bolts. Identify high-strength bolted slip-critical, direct-tensioned shear/bearing connections.

5. Clearly indicate which surfaces or edges are exposed and what class of surface preparation is being used.

6. Indicate special tolerances and erection requirements as noted on the drawings or defined herein.

D. Qualification data for firms and persons specified in the 'Quality Assurance" Article to demonstrate their capabilities and experience. Include lists of completed projects names and address, names and addresses of architects and owners, and other information specified.

1.4 QUALITY ASSURANCE

A. Fabricator Qualifications: In addition to those qualifications listed in Division 5 Section 'Structural Steel', engage a firm experienced in fabricating AESS similar to that indicated for this Project with a record of successful in-service performance, as well as sufficient production capacity to fabricate AESS without delaying the Work.

B. Erector Qualifications: In addition to those qualifications listed in Division 5 Section 'Structural Steel', engage an experienced Erector who has completed AESS work similar in material, design, and extent to that indicted for this Project and with a record of successful in-service performance.

C. Pre-installation Conference: The General Contractor shall schedule and conduct conference at the project site to comply with requirements of Division 1 Section "Project Meetings." As a minimum, the meeting shall include the General Contractor, Fabricator, Erector, the finish-painting subcontrac- tor, and the Architect. Coordinate requirements for shipping, special handling, attachment of safety cables and temporary erection bracing, touch up painting and other requirements for AESS.

1.5 DELIVERY, STORAGE, AND HANDLING

A. Deliver AESS to Project site in such quantities and at such times to ensure continuity of installation.

B. Store materials to permit easy access for inspection and identification. Keep steel members off ground by using pallets, platforms, or other supports. Protect steel members and packaged materials from erosion and deterioration. Use special care in handling to prevent twisting or warping of AESS mem- bers.

C. Erect pre-painted finish pieces using padded slings or other methods such that they are not damaged. Provide padding as required to protect while rigging and aligning member's frames. Weld tabs for temporary bracing and safety cabling only at points concealed from view in the completed structure or where approved by the Architect during the pre-installation meeting. Methods of removing temporary erection devices and finishing the AESS members shall be approved by the Architect prior to erection.

1.6 PROJECT CONDITIONS

A. Field Measurements: Where AESS is indicated to fit against walls and other construction, verify dimensions by field measurements before fabrication and indicate measurements on shop drawings. Coordinate fabrication schedule with construction progress to avoid delaying the work.

1.7 COORDINATION

A. Coordinate installation of anchors for AESS members that connect to the work of other trades. Furnish setting drawings, templates, and directions for installing anchors, including sleeves, concrete in serts, anchor bolts, and items with integral anchors, that are to be embedded in concrete or masonry. Deliver such items to the project site in time for installation. [Anchorage concepts shall be as indicated on drawings and approved on final shop drawings.]

PART 2 - PRODUCTS

2.1 MATERIALS

A. General: Meet requirements Division 5 Section 'Structural Steel' as amended below.

B. High-Strength Bolts, Nuts, and Washers: Per section 05120 heavy hex heads and nuts. Provide standard carbon steel finish.

2.2 PRIMERS

A. Compatibility: The General Contractor shall submit all components/procedures of the paint system for AESS as a single coordinated submittal. As a minimum identify required surface preparation, primer, intermediate coat (if applicable) and finish coat. All of the items shall be coordinated with the finish coat specified in division 9.

B. Primer: Fast curing, universal modified alkyd, rust inhibiting shop coat with good resistance to nor mal atmospheric corrosion. Primer shall comply with all federal standards for VOC, lead and chro- mate levels.

C. Primer: Fast curing two part epoxy. Primer shall comply with all federal standards for VOC, lead and chromate levels.

2.3 FABRICATION

A. Fabricate and assemble AESS in the shop to the greatest extent possible. Locate field joints in AESS assemblies at concealed locations or as approved by the Architect. Detail AESS assemblies to minimize field handling and expedite erection.

B. Fabricate AESS with exposed surfaces smooth, square and of surface quality consistent with the approved mock up. Use special care in handling and shipping of AESS both before and after shop painting.

C. In addition to special care used to handle and fabricate AESS, employ the following fabrication techniques.

1. Welds ground smooth: Fabricator shall grind welds of AESS smooth. For groove welds, the weld shall be made flush to the surfaces each side and be within + 1/16", -0" of plate thickness.

2. Contouring and blending of welds: Where fillet welds are indicated to be ground contoured, or blended, oversize welds as required and grind to provide a smooth transition and match profile on approved mock-up.

3. Minimize Weld Show Through: At locations where welding on the far side of an exposed connection occurs, grind distortion and marking of the steel to a smooth profile with adjacent material.

4. Piece Marks Hidden: Fabricate such that piece marks are fully hidden in the final structure or made with such media to permit full removal after erection.]

5. Rolled Members: Member specified to be rolled to a final curved shape shall be fully shaped in the shop and tied during shipping to prevent stress relieving. Distortion of the web or stem and of out standing flanges or legs of angles shall be visibly acceptable to the Architect from a distance of 12 feet under any lighting condition determined by the Architect. Tolerances for the vertical and horizontal walls of rectangular TS members after rolling shall be the specified dimension +/- ½".

2.4 SHOP CONNECTIONS

A. Bolted Connections: Make in accordance with Section 05120. Provide bolt type and finish as noted herein and align bolt heads as indicated on the approved shop erection drawings.

B. Weld Connections: Comply with AWS D1.1 and Section 05120. Appearance and quality of welds shall be consistent with the mock up. Assemble and weld built-up sections by methods that will maintain alignment of members without warp exceeding the tolerance of this section.

2.5 SHOP PRIMING

A. Shop prime steel surfaces, except the following:

1. Surfaces embedded in concrete or mortar. Extend priming of partially embedded members to a depth of 2 inches.

2. Surfaces to be field welded.

3. Surfaces to be high-strength bolted with slip-critical connections, if primer does not meet the specified AISC slip coefficient.

B. Surface Preparation: Clean surfaces to be painted. Remove loose rust, loose mill scale, and spatter, slag, or flux deposits. Prepare surfaces according to SSPC Specifications as follows:

1. SSPC-SP 3 “Power Tool Cleaning.” (This level of surface prep is the minimum for most AESS projects. It may be acceptable for alkyd primers and acrylic or alkyd finish coats, particularly in interior applications.)

2. SSPC-SP 6 “Commercial Blast Cleaning.” (It is required for epoxy primers to allow adequate bonding to the steel, for locations where a rust inhibitive primer will be used in an exterior application.)

3. Coordinate the required blast profile with the approved paint submittal prior to beginning surface preparation.

C. Priming: Immediately after surface preparation, apply primer according to manufacturer's instructions to provide a dry film thickness of not less than 1.5 mils (0.038 mm). Use priming methods that result in full coverage of joints, corners, edges, and exposed surfaces.

1. Stripe paint corners, crevices, bolts, welds, and sharp edges.

2. Apply two coats of shop primer to surfaces that are inaccessible after assembly or erection.

PART 3 – EXECUTION

3.1 EXAMINATION

A. The erector shall check all AESS members upon delivery for twist, kinks, gouges or other imperfections which may result in rejection of the appearance of the member. Coordinate remedial action with fabricator prior to erecting steel.

3.2 PREPARATON

A. Provide connections for temporary shoring, bracing and supports only where noted on the approved shop drawings. Temporary connections not shown shall be made at locations not exposed to view in the final structure or as approved by the Architect. Handle, lift and align pieces using padded slings and/or other protection required to maintain the appearance of the AESS through the process of erection.

3.3 ERECTION

A. Set AESS accurately in locations and to elevations indicated and according to AISC specifications referenced in this Section.

1. AESS Erection tolerances: Erection tolerances shall meet the requirements of standard frame toler an- ces for structural steel per Chapter 7 of the AISC "Code of Standard Practice.

2. Welds ground smooth: Erector shall grind welds smooth in the connections of AESS members. For groove welds, the weld shall be made flush to the surfaces each side and be within + 1/16", -0" of plate thickness.

3. Contouring and blending of welds: Where fillet welds are indicated to be ground contoured, or blended, oversize welds as required and grind to provide a smooth transition and match profile on approved mock-up.

4. Minimize Weld Show Through: At locations where welding on the far side of an exposed connection occurs, grind distortion and marking of the steel to a smooth profile with adjacent material.

5. Bolt Head Orientation: All bolt heads shall be oriented as approved by architect. Where bolt head alignment is specified, the orientation shall be noted for each connection on the erection drawings. Where not noted, the bolt heads in a given connection shall be oriented to one side and indicated for architect review.

6. Removal of field connection aids: Run out tabs, erection bolts and other steel members added to connections to allow for alignment, fit-up, and welding in the field shall be removed from the structure.

Field groove welds shall be selected to eliminate the need for backing bars or to permit their removal after welding. Welds at run out tabs shall be removed to match adjacent surfaces and ground smooth. Holes for erection bolts shall be plug welded and ground smooth.

7. Filling of weld access holes: Where holes must be cut in the web at the intersection with flanges on W shapes and structural tees to permit field welding of the flanges, they shall be filled. Filling shall be executed with proper procedures to minimize restraint and address thermal stresses in group 4 and 5 shapes.

B. Field Welding: Weld profile, quality, and finish shall be consistent with mock-ups approved prior to fabrication.

C. Splice members only where indicated.

D. Obtain permission for any torch cutting or field fabrication from the Architect. Finish sections thermally cut during erection to a surface appearance consistent with the mock up.

E. Do not enlarge unfair holes in members by burning or by using drift pins. Ream holes that must be enlarged to admit bolts. Replace connection plates that are misaligned where holes cannot be aligned with acceptable final appearance.

3.4 FIELD CONNECTIONS

A. Bolted Connections: Install bolts of the specified type and finish in accordance with Division 5 section "Structural Steel".

B. Welded Connections: Comply with AWS D1.1 for procedures, and appearance. Refer to Division 5 section "Structural Steel" for other requirements.

1. Assemble and weld built-up sections by methods that will maintain true alignment of axes without warp. Verify that weld sizes, fabrication sequence, and equipment used for AESS will limit distortions to allowable tolerances.

2. Obtain Architects approval for appearance of welds in repaired or field modified work.

3.5 FIELD QUALITY CONTROL

A. Structural requirements: The Owner will engage an independent testing and inspecting agency to per form field inspections and tests and to prepare test reports. Refer to Division 5 section "Structural Steel" for detailed bolt and weld testing requirements.

B. AESS acceptance: The Architect shall observe the AESS steel in place and determine acceptability based on the mockup. The Testing Agency shall have no responsibility for enforcing the require ments of this section.

3.6 ADJUSTING AND CLEANING

A. Touchup Painting: Cleaning and touchup painting of field welds, bolted connections, and abraded areas of shop paint shall completed to blend with the adjacent surfaces of AESS. Such touch up work shall be done in accordance with manufacturer's instructions as specified in Division 9, Section “Painting.”

END OF SECTION

SECTION 05210

STEEL JOISTS

PART 1 - GENERAL

1.1 SUMMARY

A. This Section includes the following:

1. K-series steel joists.
2. Joist accessories.

1.2 SUBMITTALS

A. Product Data: For each type of joist, accessory, and product indicated.

B. Shop Drawings: Show layout, designation, number, type, location, and spacings of joists. Include joining and anchorage details, bracing, bridging, joist accessories; splice and connection locations and details; and attachments to other construction.

C. Welding certificates.

D. Manufacturer certificates.

E. Mill Certificates: For bolts.

F. Field quality-control test and inspection reports.

G. Research/Evaluation reports.

1.3 QUALITY ASSURANCE

A. Manufacturer Qualifications: A manufacturer certified by the Steel Joist Institute (SJI) to manufacture joists complying with SJI standard specifications and load tables.

B. SJI Specifications: Comply with SJI's "Standard Specifications, Load Tables and Weight Tables for Steel Joists and Joist Girders" (hereafter, SJI's "Specifications") that are applicable to types of joists indicated.

C. Welding: Qualify procedures and personnel according to AWS D1.1/D1.1M, "Structural Welding Code - Steel."

1.4 DELIVERY, STORAGE, AND HANDLING

A. Deliver, store, and handle joists as recommended in SJI's "Specifications."

PART 2 - PRODUCTS

2.1 MATERIALS

A. Steel: Comply with SJI's "Specifications" for web and steel-angle chord members.

1. Recycled Content: Provide products with an average recycled content of steel products so postconsumer recycled content plus one-half of preconsumer recycled content is not less than 50 percent.

B. Carbon-Steel Bolts and Threaded Fasteners: ASTM A 307, Grade A, carbon-steel, hex-head bolts and threaded fasteners; carbon-steel nuts; and flat, unhardened steel washers.

1. Finish: Plain, uncoated.

C. High-Strength Bolts, Nuts, and Washers: ASTM A 325, Type 1, heavy hex steel structural bolts; ASTM A 563 heavy hex carbon-steel nuts; and ASTM F 436 hardened carbon-steel washers.

1. Finish: Plain.

D. Primer: SSPC-Paint 15, or manufacturer's standard shop primer complying with performance requirements in SSPC-Paint 15.

2.2 K-SERIES STEEL JOISTS

A. Manufacture steel joists of type indicated according to "Standard Specifications for Open Web Steel Joists, K-Series" in SJI's "Specifications," with steel-angle top- and bottom-chord members, underslung ends, and parallel top chord.

1. Joist Type: K-series steel joists.

B. Steel Joist Substitutes: Manufacture according to "Standard Specifications for Open Web Steel Joists, K-Series" in SJI's "Specifications," with steel-angle or -channel members.

2.3 JOIST ACCESSORIES

A. Bridging: Provide bridging anchors and number of rows of horizontal or diagonal bridging of material, size, and type required by SJI's "Specifications" for type of joist, chord size, spacing, and span. Furnish additional erection bridging if required for stability.

B. Bridging: Schematically indicated. Detail and fabricate according to SJI's "Specifications." Furnish additional erection bridging if required for stability.

C. Supply ceiling extensions, either extended bottom-chord elements or a separate extension unit of enough strength to support ceiling construction. Extend ends to within 1/2 inch of finished wall surface, unless otherwise indicated.

D. Supply miscellaneous accessories, including splice plates and bolts required by joist manufacturer to complete joist installation.

2.4 CLEANING AND SHOP PAINTING

A. Clean and remove loose scale, heavy rust, and other foreign materials from fabricated joists and accessories. Apply 1 coat of shop primer.

PART 3 - EXECUTION

3.1 INSTALLATION

A. Do not install joists until supporting construction is in place and secured.

B. Install joists and accessories plumb, square, and true to line; securely fasten to supporting construction according to SJI's "Specifications," joist manufacturer's written recommendations, and requirements in this Section.

1. Before installation, splice joists delivered to Project site in more than one piece.
2. Space, adjust, and align joists accurately in location before permanently fastening.
3. Install temporary bracing and erection bridging, connections, and anchors to ensure that joists are stabilized during construction.

C. Field weld joists to supporting steel bearing plates and framework. Coordinate welding sequence and procedure with placement of joists. Comply with AWS requirements and procedures for welding, appearance and quality of welds, and methods used in correcting welding work.

D. Bolt joists to supporting steel framework using carbon-steel bolts.

E. Bolt joists to supporting steel framework using high-strength structural bolts. Comply with Research Council on Structural Connections' "Specification for Structural Joints Using ASTM A 325 or ASTM A 490 Bolts" for high-strength structural bolt installation and tightening requirements.

F. Install and connect bridging concurrently with joist erection, before construction loads are applied. Anchor ends of bridging lines at top and bottom chords if terminating at walls or beams.

3.2 FIELD QUALITY CONTROL

A. Testing Agency: Owner will engage a qualified independent testing and inspecting agency to inspect field welds and bolted connections and to perform field tests and inspections and prepare test and inspection reports.

B. Refer to structural drawings for required special inspections.

END OF SECTION

SECTION 05 3100

STEEL DECK

PART 1 - GENERAL

1.1 SUMMARY

A. This Section includes the following:

1. Roof deck.
2. Noncomposite form deck.

1.2 SUBMITTALS

A. Shop Drawings: Show layout and types of deck panels, anchorage details, reinforcing channels, pans, cut deck openings, special jointing, accessories, and attachments to other construction.

B. Product certificates.

C. Welding certificates.

D. Field quality-control test and inspection reports.

E. Research/Evaluation Reports: For steel deck.

1.3 QUALITY ASSURANCE

A. Welding: Qualify procedures and personnel according to AWS D1.3, "Structural Welding Code - Sheet Steel."

B. Fire-Test-Response Characteristics: Where indicated, provide steel deck units identical to those tested for fire resistance per ASTM E 119 by a testing and inspecting agency acceptable to authorities having jurisdiction.

1. Fire-Resistance Ratings: Indicated by design designations of applicable testing and inspecting agency.
2. Steel deck units shall be identified with appropriate markings of applicable testing and inspecting agency.

C. AISI Specifications: Comply with calculated structural characteristics of steel deck according to AISI's "North American Specification for the Design of Cold-Formed Steel Structural Members."

D. Recycled Content of Steel Products: Provide products with an average recycled content of steel products so postconsumer recycled content plus one-half of preconsumer recycled content is not less than 25 percent.

1.4 DELIVERY, STORAGE, AND HANDLING

A. Protect steel deck from corrosion, deformation, and other damage during delivery, storage, and handling.

B. Stack steel deck on platforms or pallets and slope to provide drainage. Protect with a waterproof covering and ventilate to avoid condensation.

PART 2 - PRODUCTS

2.1 MANUFACTURERS

A. Available Manufacturers: Subject to compliance with requirements, manufacturers offering products that may be incorporated into the Work include, but are not limited to, the following:

B. Manufacturers: Subject to compliance with requirements, provide products by one of the following:

1. ASC Profiles, Inc.
2. Canam Steel Corp.;The Canam Manac Group.
3. Consolidated Systems, Inc.
4. DACS, Inc.
5. D-Mac Industries Inc.
6. Epic Metals Corporation.
7. Marlyn Steel Decks, Inc.
8. New Millennium Building Systems, LLC.
9. Nucor Corp.; Vulcraft Division.
10. Roof Deck, Inc.
11. United Steel Deck, Inc.
12. Valley Joist; Division of EBSCO Industries, Inc.
13. Verco Manufacturing Co.
14. Wheeling Corrugating Company; Div. of Wheeling-Pittsburgh Steel Corporation.

2.2 ROOF DECK

A. Steel Roof Deck: Fabricate panels, without top-flange stiffening grooves, to comply with "SDI Specifications and Commentary for Steel Roof Deck," in SDI Publication No. 30, and with the following:

1. Prime-Painted Steel Sheet: ASTM A 1008/A 1008M, Structural Steel (SS), Grade 33 minimum, shop primed with manufacturer's standard baked-on, rust-inhibitive primer.

    a. Color: Manufacturer's standard.

2. Galvanized Steel Sheet: ASTM A 653, Structural Steel (SS), Grade 33 zinc coating.
3. Galvanized and Shop-Primed Steel Sheet: ASTM A 653, Structural Steel (SS), Grade 33 zinc coating; cleaned, pretreated, and primed with manufacturer's standard baked-on, rust-inhibitive primer.

    a. Color: Manufacturer's standard.

4. Deck Profile: As indicated.
5. Profile Depth: As indicated.
6. Design Uncoated-Steel Thickness: As indicated.

2.3 COMPOSITE FORM DECK

A. Composite Steel Form Deck: Fabricate ribbed-steel sheet composite form-deck panels to comply with "SDI Specifications and Commentary for Composite Steel Form Deck," in SDI Publication, with the minimum section properties indicated, and with the following:

1. Uncoated Steel Sheet: ASTM A 1008, Structural Steel (SS), Grade 33 minimum.
2. Prime-Painted Steel Sheet: ASTM A 1008, Structural Steel (SS), Grade 33 minimum, with top and underside surface shop primed with manufacturer's standard baked-on, rust-inhibitive primer.

    a. Color: Manufacturer's standard.

3. Galvanized Steel Sheet: ASTM A 653, Structural Steel (SS), Grade 33 zinc coating.
4. Galvanized and Shop-Primed Steel Sheet: ASTM A 653, Structural Steel (SS), Grade 33, G60 zinc coating; cleaned, pretreated, and primed with manufacturer's standard baked-on, rust-inhibitive primer.

    a. Color: Manufacturer's standard.

5. Profile Depth: As indicated.
6. Design Uncoated-Steel Thickness: As indicated.
7. Span Condition: As indicated.

2.4 ACCESSORIES

A. General: Provide manufacturer's standard accessory materials for deck that comply with requirements indicated.

B. Mechanical Fasteners: Corrosion-resistant, low-velocity, power-actuated or pneumatically driven carbon-steel fasteners; or self-drilling, self-threading screws.

C. Side-Lap Fasteners: Corrosion-resistant, hexagonal washer head; self-drilling, carbon-steel screws, No. 10 minimum diameter.

D. Flexible Closure Strips: Vulcanized, closed-cell, synthetic rubber.

E. Miscellaneous Sheet Metal Deck Accessories: Steel sheet, minimum yield strength of 33,000 psi not less than 0.0359-inch design uncoated thickness, of same material and finish as deck; of profile indicated or required for application.

F. Repair Paint: Manufacturer's standard rust-inhibitive primer of same color as primer.

PART 3 - EXECUTION

3.1 INSTALLATION

A. Install deck panels and accessories according to applicable specifications and commentary in SDI Publication No. 30, manufacturer's written instructions, requirements in this Section, and as indicated.

B. Place deck panels on supporting frame and adjust to final position with ends accurately aligned and bearing on supporting frame before being permanently fastened. Do not stretch or contract side-lap interlocks.

C. Place deck panels flat and square and fasten to supporting frame without warp or deflection.

D. Cut and neatly fit deck panels and accessories around openings and other work projecting through or adjacent to deck.

E. Provide additional reinforcement and closure pieces at openings as required for strength, continuity of deck, and support of other work.

F. Comply with AWS requirements and procedures for manual shielded metal arc welding, appearance and quality of welds, and methods used for correcting welding work.

G. Mechanical fasteners may be used in lieu of welding to fasten deck. Locate mechanical fasteners and install according to deck manufacturer's written instructions.

H. End Bearing: Install deck ends over supporting frame with a minimum end bearing of 1-1/2 inches.

I. Roof Sump Pans and Sump Plates: Install over openings provided in roof deck and weld or mechanically fasten flanges to top of deck. Space welds or mechanical fasteners not more than 12 inches apart with at least one weld or fastener at each corner.

1. Install reinforcing channels or zees in ribs to span between supports and weld or mechanically fasten.

J. Miscellaneous Roof-Deck Accessories: Install ridge and valley plates, finish strips, end closures, and reinforcing channels according to deck manufacturer's written instructions. Weld or mechanically fasten to substrate to provide a complete deck installation.

1. Weld cover plates at changes in direction of roof-deck panels, unless otherwise indicated.

K. Pour Stops and Girder Fillers: Weld steel sheet pour stops and girder fillers to supporting structure according to SDI recommendations, unless otherwise indicated.

L. Floor-Deck Closures: Weld steel sheet column closures, cell closures, and Z-closures to deck, according to SDI recommendations, to provide tight-fitting closures at open ends of ribs and sides of deck.

3.2 FIELD QUALITY CONTROL

A. Testing Agency: Owner will engage a qualified independent testing and inspecting agency to perform field tests and inspections and prepare test reports. Refer to structural drawings for required special inspections.

B. Field welds will be subject to inspection.

C. Testing agency will report inspection results promptly and in writing to Contractor and Architect.

D. Remove and replace work that does not comply with specified requirements.

E. Additional inspecting, at Contractor's expense, will be performed to determine compliance of corrected work with specified requirements.

3.3 REPAIRS

A. Galvanizing Repairs: Prepare and repair damaged galvanized coatings on both surfaces of deck with galvanized repair paint according to ASTM A 780 and manufacturer's written instructions.

B. Repair Painting: Wire brush and clean rust spots, welds, and abraded areas on both surfaces of prime-painted deck immediately after installation, and apply repair paint.

END OF SECTION

SECTION 054000

COLD-FORMED METAL FRAMING

PART 1 - GENERAL

1.1 RELATED DOCUMENTS

A. Drawings and general provisions of the Contract, including General and Supplementary Conditions and Division 01 Specification Sections, apply to this Section.

1.2 SUMMARY

A. This Section includes the following:

1. Exterior load-bearing wall framing.
2. Interior load-bearing wall framing.
3. Exterior non-load-bearing wall framing.
4. Floor joist framing.
5. Roof trusses.
6. Roof rafter framing.
7. Ceiling joist framing.

1.3 PERFORMANCE REQUIREMENTS

A. Structural Performance: Provide cold-formed metal framing capable of withstanding design loads within limits and under conditions indicated.

1.4 QUALITY ASSURANCE

A. Engineering Responsibility: Preparation of Shop Drawings, design calculations, and other structural data by a qualified professional engineer.

B. Professional Engineer Qualifications: A professional engineer who is legally qualified to practice in jurisdiction where Project is located and who is experienced in providing engineering services of the kind indicated. Engineering services are defined as those performed for installations of cold-formed metal framing that are similar to those indicated for this Project in material, design, and extent.

C. Testing Agency Qualifications: An independent testing agency, acceptable to authorities having jurisdiction, qualified according to ASTM E 329 to conduct the testing indicated.

D. Product Tests: Mill certificates or data from a qualified independent testing agency indicating steel sheet complies with requirements, including base-metal thickness, yield strength, tensile strength, total elongation, chemical requirements, ductility, and metallic-coating thickness.

E. Welding: Qualify procedures and personnel according to AWS D1.1, "Structural Welding Code--Steel," and AWS D1.3, "Structural Welding Code--Sheet Steel."

F. Fire-Test-Response Characteristics: Where indicated, provide cold-formed metal framing identical to that of assemblies tested for fire resistance per ASTM E 119 by a testing and inspecting agency acceptable to authorities having jurisdiction.

G. AISI Specifications and Standards: Comply with AISI's "North American Specification for the Design of Cold-Formed Steel Structural Members" and its "Standard for Cold-Formed Steel Framing - General Provisions."

1. Comply with AISI's "Standard for Cold-Formed Steel Framing - Truss Design."
2. Comply with AISI's "Standard for Cold-Formed Steel Framing - Header Design."

H. Comply with AISI's "Standard for Cold-Formed Steel Framing - Prescriptive Method for One and Two Family Dwellings."

I. Preinstallation Conference: Conduct conference at Project site to comply with requirements in Division 01 Section "Project Management and Coordination."

1.5 DELIVERY, STORAGE, AND HANDLING

A. Protect cold-formed metal framing from corrosion, deformation, and other damage during delivery, storage, and handling.

B. Store cold-formed metal framing, protect with a waterproof covering, and ventilate to avoid condensation.

PART 2 - PRODUCTS

2.1 MANUFACTURERS

A. Available Manufacturers: Subject to compliance with requirements, manufacturers offering cold-formed metal framing that may be incorporated into the Work include, but are not limited to, the following:

B. Manufacturers: Subject to compliance with requirements, provide cold-formed metal framing from an approved SSMA source.

2.2 MATERIALS

A. Recycled Content of Steel Products: Provide products with an average recycled content of steel products so postconsumer recycled content plus one-half of preconsumer recycled content is not less than 95 percent.

B. Steel Sheet: ASTM A 1003, Structural Grade, Type H, metallic coated, of grade and coating weight as follows:

1. Grade: ST33H and ST50H .
2. Coating: G60.

C. Steel Sheet for Vertical Deflection Drift Clips: ASTM A 653, structural steel, zinc coated, of grade and coating as follows:

1. Grade: 50, Class 1 or 2
2. Coating: G90.

2.3 LOAD-BEARING WALL FRAMING

A. Steel Studs: Manufacturer's standard C-shaped steel studs, of web depths indicated, punched, with stiffened flanges, and as follows:

1. Minimum Base-Metal Thickness: As specified.
2. Flange Width: As specified..
3. Section Properties: As specified.

B. Steel Track: Manufacturer's standard U-shaped steel track, of web depths indicated, unpunched, with straight flanges, and as follows:

1. Minimum Base-Metal Thickness: As specified.
2. Flange Width: As specified.
3.

2.4 EXTERIOR NON-LOAD-BEARING WALL FRAMING

A. Steel Studs: Manufacturer's standard C-shaped steel studs, of web depths indicated, punched, with stiffened flanges, and as follows:

1. Minimum Base-Metal Thickness: 0.0329 inch.
2. Flange Width: 1-3/8 inches.
3. Section Properties: As indicated.

B. Steel Track: Manufacturer's standard U-shaped steel track, of web depths indicated, unpunched, with unstiffened flanges, and as follows:

1. Minimum Base-Metal Thickness: 0.0329 inch.
2. Flange Width: 1-1/4 inches.

C. Vertical Deflection Clips: Manufacturer's standard clips, capable of accommodating upward and downward vertical displacement of primary structure through positive mechanical attachment to stud web.

1. Available Manufacturers: Subject to compliance with requirements, manufacturers offering products that may be incorporated into the Work include, but are not limited to, the following:
2. Manufacturers: Subject to compliance with requirements, provide products by one of the following:

a. Dietrich Metal Framing; a Worthington Industries Company.
b. MarinoWare, a division of Ware Industries.
c. SCAFCO Corporation
d. The Steel Network, Inc.

D. Single Deflection Track: Manufacturer's single, deep-leg, U-shaped steel track; unpunched, with unstiffened flanges, of web depth to contain studs while allowing free vertical movement, with flanges designed to support horizontal and lateral loads and transfer them to the primary structure, and as follows:

1. Minimum Base-Metal Thickness: 0.0428 inch minimum.
2. Flange Width: 1 inch plus the design gap for 1-story structures and 1 inch plus twice the design gap for other applications.

E. Double Deflection Tracks: Manufacturer's double, deep-leg, U-shaped steel tracks, consisting of nested inner and outer tracks; unpunched, with unstiffened flanges.

1. Outer Track: Of web depth to allow free vertical movement of inner track, with flanges designed to support horizontal and lateral loads and transfer them to the primary structure, and as follows:

a. Minimum Base-Metal Thickness: 0.0428 inch minimum.
b. Flange Width: 1 inch plus the design gap for 1-story structures and 1 inch plus twice the design gap for other applications.

2. Inner Track: Of web depth indicated, and as follows:

a. Minimum Base-Metal Thickness: 0.0428 inch minimum.
b. Flange Width: Dimension equal to sum of outer deflection track flange width plus 1 inch.

F. Drift Clips: Manufacturer's standard bypass or head clips, capable of isolating wall stud from upward and downward vertical displacement and lateral drift of primary structure.

2.5 ROOF-RAFTER FRAMING

A. Steel Rafters: Manufacturer's standard C-shaped steel sections, of web depths indicated, unpunched, with stiffened flanges, and as follows:

1. Minimum Base-Metal Thickness: 0.0329 inch minimum.
2. Flange Width: 1-5/8 inches minimum.
3. Section Properties: As indicated.

B. Built-up Members: Built-up members of manufacturer's standard C-shaped steel section, with stiffened flanges, nested into a U-shaped steel section joist track, with unstiffened flanges; unpunched; of web depths indicated; and as follows:

1. Minimum Base-Metal Thickness: 0.0329 inch minimum or matching steel rafters.
2. Flange Width: 1-5/8 inches minimum.

2.6 FRAMING ACCESSORIES

A. Fabricate steel-framing accessories from steel sheet, ASTM A 1003/A 1003M, Structural Grade, Type H, metallic coated, of same grade and coating weight used for framing members.

B. Provide accessories of manufacturer's standard thickness and configuration, unless otherwise indicated, as follows:

1. Supplementary framing.
2. Bracing, bridging, and solid blocking.
3. Web stiffeners.
4. Anchor clips.
5. End clips.

6. Foundation clips.
7. Gusset plates.
8. Stud kickers, knee braces, and girts.
9. Joist hangers and end closures.
10. Hole reinforcing plates.
11. Backer plates.

2.7 ANCHORS, CLIPS, AND FASTENERS

A. Steel Shapes and Clips: ASTM A 36, zinc coated by hot-dip process according to ASTM A 123.

B. Anchor Bolts: ASTM F 1554, Grade **36**, threaded carbon-steel hex-headed bolts and carbon-steel nuts; and flat, hardened-steel washers.

C. Expansion Anchors: Fabricated from corrosion-resistant materials, with capability to sustain, without failure, a load equal to 5 times design load, as determined by testing per ASTM E 488 conducted by a qualified independent testing agency.

D. Power-Actuated Anchors: Fastener system of type suitable for application indicated, fabricated from corrosion-resistant materials, with capability to sustain, without failure, a load equal to 10 times design load, as determined by testing per ASTM E 1190 conducted by a qualified independent testing agency.

E. Mechanical Fasteners: ASTM C 1513, corrosion-resistant-coated, self-drilling, self-tapping steel drill screws.

1. Head Type: Low-profile head beneath sheathing, manufacturer's standard elsewhere.

F. Welding Electrodes: Comply with AWS standards.

2.8 MISCELLANEOUS MATERIALS

A. Galvanizing Repair Paint: SSPC-Paint 20 or DOD-P-21035 ASTM A 780.

B. Cement Grout: Portland cement, ASTM C 150, Type I; and clean, natural sand, ASTM C 404. Mix at ratio of 1 part cement to 2-1/2 parts sand, by volume, with minimum water required for placement and hydration.

C. Nonmetallic, Nonshrink Grout: Premixed, nonmetallic, noncorrosive, nonstaining grout containing selected silica sands, portland cement, shrinkage-compensating agents, and plasticizing and water-reducing agents, complying with ASTM C 1107, with fluid consistency and 30-minute working time.

D. Shims: Load bearing, high-density multimonomer plastic, nonleaching.

E. Sealer Gaskets: Closed-cell neoprene foam, 1/4 inch thick, selected from manufacturer's standard widths to match width of bottom track or rim track members.

2.9 FABRICATION

A. Fabricate cold-formed metal framing and accessories plumb, square, and true to line, and with connections securely fastened, according to referenced AISI's specifications and standards, manufacturer's written instructions, and requirements in this Section.

B. Reinforce, stiffen, and brace framing assemblies to withstand handling, delivery, and erection stresses. Lift fabricated assemblies to prevent damage or permanent distortion.

C. Fabrication Tolerances: Fabricate assemblies level, plumb, and true to line to a maximum allowable tolerance variation of 1/8 inch in 10 feet and as follows:

1. Spacing: Space individual framing members no more than plus or minus 1/8 inch from plan location. Cumulative error shall not exceed minimum fastening requirements of sheathing or other finishing materials.
2. Squareness: Fabricate each cold-formed metal framing assembly to a maximum out-of-square tolerance of 1/8 inch.

PART 3 - EXECUTION

3.1 EXAMINATION

A. Examine supporting substrates and abutting structural framing for compliance with requirements for installation tolerances and other conditions affecting performance.

1. Proceed with installation only after unsatisfactory conditions have been corrected.

3.2 INSTALLATION, GENERAL

A. Cold-formed metal framing may be shop or field fabricated for installation, or it may be field assembled.

B. Install cold-formed metal framing according to AISI's "Standard for Cold-Formed Steel Framing - General Provisions" and to manufacturer's written instructions unless more stringent requirements are indicated.

C. Install shop- or field-fabricated, cold-formed framing and securely anchor to supporting structure.

1. Screw, bolt, or weld wall panels at horizontal and vertical junctures to produce flush, even, true-to-line joints with maximum variation in plane and true position between fabricated panels not exceeding 1/16 inch.

D. Install cold-formed metal framing and accessories plumb, square, and true to line, and with connections securely fastened.

1. Cut framing members by sawing or shearing; do not torch cut.
2. Fasten cold-formed metal framing members by welding, screw fastening, clinch fastening, or riveting. Wire tying of framing members is not permitted.

a. Comply with AWS D1.3 requirements and procedures for welding, appearance and quality of welds, and methods used in correcting welding work.

b. Locate mechanical fasteners and install according to Shop Drawings, and complying with requirements for spacing, edge distances, and screw penetration.

E. Install framing members in one-piece lengths unless splice connections are indicated for track or tension members.

F. Install temporary bracing and supports to secure framing and support loads comparable in intensity to those for which structure was designed. Maintain braces and supports in place, undisturbed, until entire integrated supporting structure has been completed and permanent connections to framing are secured.

G. Do not bridge building expansion and control joints with cold-formed metal framing. Independently frame both sides of joints.

H. Install insulation, specified in Division 07 Section "Thermal Insulation," in built-up exterior framing members, such as headers, sills, boxed joists, and multiple studs at openings, that are inaccessible on completion of framing work.

I. Fasten hole reinforcing plate over web penetrations that exceed size of manufacturer's standard punched openings.

J. Erection Tolerances: Install cold-formed metal framing level, plumb, and true to line to a maximum allowable tolerance variation of 1/8 inch in 10 feet and as follows:

1. Space individual framing members no more than plus or minus 1/8 inch from plan location. Cumulative error shall not exceed minimum fastening requirements of sheathing or other finishing materials.

3.3 LOAD-BEARING WALL INSTALLATION

A. Install continuous top and bottom tracks sized to match studs. Align tracks accurately and securely anchor at corners and ends, and at spacings as follows:

1. Anchor Spacing: 24 inches.

B. Squarely seat studs against top and bottom tracks with gap not exceeding of 1/8 inch (3 mm) between the end of wall framing member and the web of track. Fasten both flanges of studs to top and bottom tracks. Space studs as follows:

1. Stud Spacing: 16 inches or as indicated.

C. Set studs plumb, except as needed for diagonal bracing or required for nonplumb walls or warped surfaces and similar configurations.

D. Align studs vertically where floor framing interrupts wall-framing continuity. Where studs cannot be aligned, continuously reinforce track to transfer loads.

E. Align floor and roof framing over studs. Where framing cannot be aligned, continuously reinforce track to transfer loads.

F. Anchor studs abutting structural columns or walls, including masonry walls, to supporting structure as indicated.

G. Install headers over wall openings wider than stud spacing. Locate headers above openings as indicated. Fabricate headers of compound shapes indicated or required to transfer load to supporting studs, complete with clip-angle connectors, web stiffeners, or gusset plates.

1. Frame wall openings with not less than a double stud at each jamb of frame as indicated on Shop Drawings. Fasten jamb members together to uniformly distribute loads.
2. Install runner tracks and jack studs above and below wall openings. Anchor tracks to jamb studs with clip angles or by welding, and space jack studs same as full-height wall studs.

H. Install supplementary framing, blocking, and bracing in stud framing indicated to support fixtures, equipment, services, casework, heavy trim, furnishings, and similar work requiring attachment to framing.

1. If type of supplementary support is not indicated, comply with stud manufacturer's written recommendations and industry standards in each case, considering weight or load resulting from item supported.

I. Install horizontal bridging in stud system, spaced 48 inches o.c. Fasten at each stud intersection.

1. Bridging: Cold-rolled steel channel, welded or mechanically fastened to webs of punched studs with a minimum of 2 screws into each flange of the clip angle for framing members up to 6 inches deep.
2. Bridging: Combination of flat, taut, steel sheet straps of width and thickness indicated and stud-track solid blocking of width and thickness to match studs. Fasten flat straps to stud flanges and secure solid blocking to stud webs or flanges.
3. Bridging: Proprietary bridging bars installed according to manufacturer's written instructions.

J. Install steel sheet diagonal bracing straps to both stud flanges, terminate at and fasten to reinforced top and bottom tracks. Fasten clip-angle connectors to multiple studs at ends of bracing and anchor to structure.

K. Install miscellaneous framing and connections, including supplementary framing, web stiffeners, clip angles, continuous angles, anchors, and fasteners, to provide a complete and stable wall-framing system.

3.4 EXTERIOR NON-LOAD-BEARING WALL INSTALLATION

A. Install continuous tracks sized to match studs. Align tracks accurately and securely anchor to supporting structure as indicated.

B. Fasten both flanges of studs to top and bottom track, unless otherwise indicated. Space studs as follows:

1. Stud Spacing: 16 inches or as indicated.

C. Set studs plumb, except as needed for diagonal bracing or required for nonplumb walls or warped surfaces and similar requirements.

D. Isolate non-load-bearing steel framing from building structure to prevent transfer of vertical loads while providing lateral support.

E. Install horizontal bridging in wall studs, spaced in rows indicated on Shop Drawings but not more than 48 inches apart. Fasten at each stud intersection.

F. Install miscellaneous framing and connections, including stud kickers, web stiffeners, clip angles, continuous angles, anchors, fasteners, and stud girts, to provide a complete and stable wall-framing system.

3.5 JOIST INSTALLATION

A. Install perimeter joist track sized to match joists. Align and securely anchor or fasten track to supporting structure at corners, ends, and spacings indicated on Shop Drawings.

B. Install joists bearing on supporting frame, level, straight, and plumb; adjust to final position, brace, and reinforce. Fasten joists to both flanges of joist track.

C. Space joists not more than 2 inches from abutting walls, and as follows:

1. Joist Spacing: As indicated.

D. Frame openings with built-up joist headers consisting of joist and joist track, nesting joists, or another combination of connected joists if indicated.

E. Install joist reinforcement at interior supports with single, short length of joist section located directly over interior support, with lapped joists of equal length to joist reinforcement, or as indicated.

1. Install web stiffeners to transfer axial loads of walls above.

F. Install bridging at intervals indicated. Fasten bridging at each joist intersection as follows:

1. Bridging: Joist-track solid blocking of width and thickness indicated, secured to joist webs.
2. Bridging: Combination of flat, taut, steel sheet straps of width and thickness indicated and joist-track solid blocking of width and thickness indicated. Fasten flat straps to bottom flange of joists and secure solid blocking to joist webs.

G. Secure joists to load-bearing interior walls to prevent lateral movement of bottom flange.

H. Install miscellaneous joist framing and connections, including web stiffeners, closure pieces, clip angles, continuous angles, hold-down angles, anchors, and fasteners, to provide a complete and stable joist-framing assembly.

3.6 FIELD QUALITY CONTROL

A. Testing: Owner will engage a qualified independent testing and inspecting agency to perform field tests and inspections and prepare test reports.

B. Field and shop welds will be subject to testing and inspecting.

C. Testing agency will report test results promptly and in writing to Contractor and Architect.

D. Remove and replace work where test results indicate that it does not comply with specified requirements.

E. Additional testing and inspecting, at Contractor's expense, will be performed to determine compliance of replaced or additional work with specified requirements.

END OF SECTION

SECTION 05500

METAL FABRICATIONS

PART 1 GENERAL

1.1 SECTION INCLUDES

A. Shop fabricated metal items.

1.2 RELATED SECTIONS

A. Section : Structural steel anchor bolts.
B. Section: Structural joist, bearing plates, including anchorage.
C. Section : Bearing plates or angles and for metal deck bearing, including anchorage.

1.3 REFERENCES

A. ANSI A14.3 - Ladders, Fixed, Safety Requirements.
B. ASTM A36 - Structural Steel.
C. ASTM A53 - Hot-Dipped, Zinc-coated Welded and Seamless Steel Pipe.
D. ASTM A123 - Zinc (Hot-Dip Galvanized) Coatings on Iron and Steel Products.
E. ASTM A500 - Cold-Formed Welded and Seamless Carbon Steel Structural Tubing in Round and Shapes.
F. ASTM A501 - Hot-Formed Welded and Seamless Carbon Steel Structural Tubing.
G. AWS A2.0 - Standard Welding Symbols.
H. AWS D1.1 - Structural Welding Code.

1.4 SUBMITTALS FOR REVIEW

A. Section 01300 - Submittals: Procedures for submittals.
B. Shop Drawings: Indicate profiles, sizes, connection attachments, reinforcing, anchorage, size and type of fasteners, and accessories. Include erection drawings, elevations, and details where applicable.
C. Indicate welded connections using standard AWS A2.0 welding symbols. Indicate net weld lengths.

1.5 QUALIFICATIONS

A. Prepare Shop Drawings under direct supervision of a Professional Structural Engineer experienced in design of this work and licensed at the place where the Project is located.
B. Welders Certificates: Submit under provisions of Section 01300, certifying welders employed on the Work.

PART 2 PRODUCTS

2.1 MATERIALS - STEEL

A. Steel Sections: ASTM A36.
B. Steel Tubing: ASTM A500, Grade B.
C. Plates: ASTM A283.
D. Pipe: ASTM A53, Grade B Schedule 40.
E. Fasteners: Provide zinc-coated fasteners for exterior use or where built into exterior walls. Select fasteners for the type, grade, and class required.

F. Bolts, Nuts, and Washers: ASTM A325, galvanized to ASTM A153 for galvanized components.
G. Welding Materials: AWS D1.1; type required for materials being welded.
H. Ladders: ANSI A14.3.
I. Shop and Touch-Up Primer: SSPC 15, Type 1, red oxide

2.2 FABRICATION

A. Fit and shop assemble items in largest practical sections, for delivery to site.
B. Fabricate items with joints tightly fitted and secured.
C. Continuously seal joined members by continuous welds.
D. Grind exposed joints flush and smooth with adjacent finish surface. Make exposed joints butt tight, flush, and hairline. Ease exposed edges to small uniform radius.
E. Exposed Mechanical Fastenings: Flush countersunk screws or bolts; unobtrusively located; consistent with design of component, except where specifically noted otherwise.
F. Supply components required for anchorage of fabrications. Fabricate anchors and related components of same material and finish as fabrication, except where specifically noted otherwise.

2.3 FABRICATION TOLERANCES

A. Squareness: 1/8 inch maximum difference in diagonal measurements.
B. Maximum Offset Between Faces: 1/16 inch.
C. Maximum Misalignment of Adjacent Members: 1/16 inch.
D. Maximum Bow: 1/8 inch in 4 feet.
E. Maximum Deviation From Plane: 1/16 inch in 4 feet.

2.4 FINISHES - STEEL

A. Clean surfaces of rust, scale, grease, and foreign matter prior to finishing.
B. Do not prime surfaces in direct contact with concrete or where field welding is required.
C. Prime paint items with one coat.
D. Structural Steel Members: Galvanize after fabrication to ASTM A123. Provide minimum 380 g/sq. m galvanized coating.
E. Non-structural Items: Galvanized after fabrication to ASTM A123. Provide minimum 380 g/sq. m galvanized coating.

PART 3 EXECUTION

3.1 EXAMINATION

A. Verify that field conditions are acceptable and are ready to receive work.

3.2 PREPARATION

A. Clean and strip primed steel items to bare metal where site welding is required.
B. Supply steel items required to be cast into concrete or embedded in masonry with setting templates to appropriate sections.

3.3 INSTALLATION

A. Install items plumb and level, accurately fitted, free from distortion or defects.
B. Provide for erection loads, and for sufficient temporary bracing to maintain true alignment until completion of erection and installation of permanent attachments.
C. Field weld components indicated on Drawings and shop drawings.
D. Perform field welding in accordance with AWS D1.1.

E. Obtain approval prior to site cutting or making adjustments not scheduled.
F. After erection, prime welds, abrasions, and surfaces not shop primed, except surfaces to be in contact with concrete.

3.4 ERECTION TOLERANCES

A. Maximum Variation From Plumb: 1/4 inch per story, non-cumulative.
B. Maximum Offset From True Alignment 6 mm.
C. Maximum Out-of-Position: 1/4 inch.

3.5 SCHEDULE

A. Refer to Drawings for items.

END OF SECTION

SECTION 05511
METAL PAN STAIRS

PART 1 - GENERAL

1.01 RELATED DOCUMENTS

A. Drawings and general provisions of the Contract, including General and Supplementary Conditions and Division 01 Specification Sections, apply to this Section.

1.02 SUMMARY

A. Section Includes:

1. Preassembled steel stairs with concrete-filled treads.
2. Steel tube railings attached to metal stairs.
3. Steel tube handrails attached to walls adjacent to metal stairs.
4. Ornamental steel framed stairs.

B. See Division 05 Section "Pipe and Tube Railings" for pipe and tube railings not attached to metal stairs or to walls adjacent to metal stairs.

1.03 PERFORMANCE REQUIREMENTS

A. Delegated Design: Design metal stairs, including comprehensive engineering analysis by a qualified professional engineer, using performance requirements and design criteria indicated.

B. Structural Performance of Stairs: Metal stairs shall withstand the effects of gravity loads and the following loads and stresses within limits and under conditions indicated.

1. Uniform Load: 100 lbf/sq. ft. (4.79 kN/sq. m).
2. Concentrated Load: 300 lbf (1.33 kN) applied on an area of 4 sq. in. (2580 sq. mm).
3. Uniform and concentrated loads need not be assumed to act concurrently.
4. Stair Framing: Capable of withstanding stresses resulting from railing loads in addition to loads specified above.
5. Limit deflection of treads, platforms, and framing members to L/360 or 1/4 inch (6.4 mm), whichever is less.

C. Structural Performance of Railings: Railings shall withstand the effects of gravity loads and the following loads and stresses within limits and under conditions indicated.

1. Handrails and Top Rails of Guards:

a. Uniform load of 50 lbf/ ft. applied in any direction.
b. Concentrated load of 200 lbf applied in any direction.
c. Uniform and concentrated loads need not be assumed to act concurrently.

2. Infill of Guards:

a. Concentrated load of 50 lbf applied horizontally on an area of 1 sq. ft.
b. Infill load and other loads need not be assumed to act concurrently.

D. Seismic Performance: Metal stairs shall withstand the effects of earthquake motions determined according to ASCE/SEI 7.

1. Component Importance Factor is 1.5.

1.04 SUBMITTALS

A. Product Data: For metal stairs.

B. LEED Submittals:

1. Product Data for Credit MR 4.1 and Credit MR 4.2: Indicating percentages by weight of postconsumer and preconsumer recycled content for products having recycled content. Include statement indicating costs for each product having recycled content.

C. Shop Drawings: Include plans, elevations, sections, details, and attachments to other work.

D. Delegated-Design Submittal: For installed products indicated to comply with performance requirements and design criteria, including analysis data signed and sealed by the qualified professional engineer responsible for their preparation

1.05 QUALITY ASSURANCE

A. NAAMM Stair Standard: Comply with "Recommended Voluntary Minimum Standards for Fixed Metal Stairs" in NAAMM AMP 510, "Metal Stairs Manual," for class of stair designated, unless more stringent requirements are indicated.

1. Preassembled Stairs: Commercial class.

PART 2 - PRODUCTS

2.01 METALS

A. Metal Surfaces, General: Provide materials with smooth, flat surfaces unless otherwise indicated. For components exposed to view in the completed Work, provide materials without seam marks, roller marks, rolled trade names, or blemishes.

B. Recycled Content of Steel Products: Provide products with average recycled content of steel products so postconsumer recycled content plus one-half of preconsumer recycled content is not less than 25 percent.

C. Steel Plates, Shapes, and Bars: ASTM A 36/A 36M.

D. Steel Tubing: ASTM A 500 (cold formed).

E. Rolled-Steel Floor Plate: ASTM A 786/A 786M, rolled from plate complying with ASTM A 36/A 36M or ASTM A 283/A 283M, Grade C or D.

F. Uncoated, Cold-Rolled Steel Sheet: ASTM A 1008/A 1008M, either commercial steel, Type B, or structural steel, Grade 25 (Grade 170), unless another grade is required by design loads; exposed.

G. Uncoated, Hot-Rolled Steel Sheet: ASTM A 1011/A 1011M, either commercial steel, Type B, or structural steel, Grade 30 (Grade 205), unless another grade is required by design loads.

2.02 MISCELLANEOUS MATERIALS

A. Shop Primers: Provide primers that comply with Division 09 painting Sections and Division 09 Section "High-Performance Coatings."

B. Universal Shop Primer: Fast-curing, lead- and chromate-free, universal modified-alkyd primer complying with MPI#79 and compatible with topcoat.

C. Concrete Materials and Properties: Comply with requirements in Division 03 Section "Cast-in-Place Concrete" for normal-weight, air-entrained, ready-mix concrete with a minimum 28-day compressive strength of 3000 psi unless otherwise indicated.

D. Welded Wire Fabric: ASTM A 185/A 185M, 6 by 6 inches, W1.4 by W1.4, unless otherwise indicated.

E. Precast Concrete Treads: Comply with requirements in Division 03 Section "Cast-in-Place Concrete" for normal-weight, ready-mixed concrete with a minimum 28-day compressive strength of 5000 psi and a total air content of not less than 4 percent or more than 6 percent. Reinforce with galvanized, welded wire fabric, 2 by 2 inches by 0.062-inch-diameter wire; comply with ASTM A 185/A 185M and ASTM A 82/A 82M, except for minimum wire size.

2.03 FABRICATION, GENERAL

A. Provide complete stair assemblies, including metal framing, hangers, struts, railings, clips, brackets, bearing plates, and other components necessary to support and anchor stairs and platforms on supporting structure.

1. Join components by welding unless otherwise indicated.
2. Use connections that maintain structural value of joined pieces.
3. Fabricate treads and platforms of exterior stairs so finished walking surfaces slope to drain.

B. Preassembled Stairs: Assemble stairs in shop to greatest extent possible. Disassemble units only as necessary for shipping and handling limitations.

C. Cut, drill, and punch metals cleanly and accurately. Remove burrs and ease edges. Remove sharp or rough areas on exposed surfaces.

D. Form bent-metal corners to smallest radius possible without impairing work.

E. Weld connections to comply with the following:

1. Use materials and methods that minimize distortion and develop strength and corrosion resistance of base metals.
2. Obtain fusion without undercut or overlap.
3. Remove welding flux immediately.
4. Weld exposed corners and seams continuously unless otherwise indicated.
5. At exposed connections, finish exposed welds to comply with NOMMA's "Voluntary Joint Finish Standards" for Type 4 welds: good quality, uniform undressed weld with minimal splatter.

F. Form exposed connections with hairline joints, flush and smooth, using concealed fasteners where possible. Locate joints where least conspicuous.

2.04 STAIR RAILINGS

A. Steel Tube Railings: Fabricate railings to comply with requirements indicated for design, dimensions, details, finish, and member sizes, including wall thickness of tube, post spacings, and anchorage, but not less than that needed to withstand indicated loads.

1. Rails and Posts: 1-5/8-inch- (41-mm-) diameter or 1-1/2-inch- (38-mm-) square top and bottom rails and 1-1/2-inch- (38-mm-) square posts.
2. Intermediate Rails Infill: 1-1/2-inch- (38-mm-) square intermediate rails spaced less than 12 inches (305 mm) clear.

B. Welded Connections: Fabricate railings with welded connections. Cope components at connections to provide close fit, or use fittings designed for this purpose. Weld all around at connections, including at fittings.

1. Finish welds to comply with NOMMA's "Voluntary Joint Finish Standards" for Type 4 welds: good quality, uniform undressed weld with minimal splatter.

C. Form changes in direction of railings by bending or by inserting prefabricated elbow fittings.

D. Form curves by bending members in jigs to produce uniform curvature without buckling.

E. Close exposed ends of railing members with prefabricated end fittings.

F. Provide wall returns at ends of wall-mounted handrails.

G. Brackets, Flanges, Fittings, and Anchors: Provide wall brackets, end closures, flanges, miscellaneous fittings, and anchors for interconnecting components and for attaching to other work.

1. Connect posts to stair framing by direct welding.

H. Fillers: Provide fillers made from steel plate, or other suitably crush-resistant material, to transfer wall bracket loads through wall finishes. Size fillers to suit wall finish thicknesses.

2.05 FINISHES

A. Comply with NAAMM's "Metal Finishes Manual for Architectural and Metal Products" for recommendations for applying and designating finishes.

B. Finish metal stairs after assembly.

C. Preparation for Shop Priming: Prepare uncoated ferrous-metal surfaces to comply with SSPC-SP 3, "Power Tool Cleaning."

D. Apply shop primer to uncoated surfaces of metal stair components. Comply with SSPC-PA 1, "Paint Application Specification No. 1: Shop, Field, and Maintenance Painting of Steel," for shop painting.

PART 3 - EXECUTION

A. INSTALLATION

B. Cutting, Fitting, and Placement: Perform cutting, drilling, and fitting required for installing metal stairs. Set units accurately in location, alignment, and elevation, measured from established lines and levels and free of rack.

C. Install metal stairs by welding stair framing to steel structure or to weld plates cast into concrete unless otherwise indicated.

D. Fit exposed connections accurately together to form hairline joints. Weld connections that are not to be left as exposed joints. Do not weld, cut, or abrade surfaces of exterior units that have been hot-dip galvanized after fabrication.

E. Field Welding: Comply with requirements for welding in "Fabrication, General" Article.

F. Place and finish concrete fill for treads and platforms to comply with Division 03 Section "Cast-in-Place Concrete."

1. Install abrasive nosings with anchors fully embedded in concrete.

G. Install precast concrete treads with adhesive supplied by manufacturer.
H. Attach handrails to wall with wall brackets. Use type of bracket with flange tapped for concealed anchorage to threaded hanger bolt.

3.02 ADJUSTING AND CLEANING

A. Touchup Painting: Immediately after erection, clean field welds, bolted connections, and abraded areas of shop paint, and paint exposed areas with same material as used for shop painting to comply with SSPC-PA 1 for touching up shop-painted surfaces.

END OF SECTION 05511

SECTION 05520
HANDRAILS AND GUARDRAILS

PART 1 GENERAL

1.1 SECTION INCLUDES

A. Steel tube handrails and guardrails.

1.2 RELATED SECTIONS

A. Section 06114 – Wood Blocking and Curbing.
B. Section 09900 - Painting: Paint finish.

1.3 REFERENCES

A. ASTM A53 - Hot-Dipped, Zinc-coated Welded and Seamless Steel Pipe.
B. ASTM A123 - Zinc (Hot-Dip Galvanized) Coatings on Iron and Steel Products.
C. ASTM A500 - Cold-Formed Welded and Seamless Carbon Steel Structural Tubing in Round and Shapes.

1.4 DESIGN REQUIREMENTS

A. Railing assembly, wall rails, and attachments to resist lateral force of 90 lbs at any point without damage or permanent set. Test in accordance with ASTM A935.

1.5 SUBMITTALS FOR REVIEW

A. Section 01300 - Submittals: Procedures for submittals.
B. Shop Drawings: Indicate profiles, sizes, connection attachments, anchorage, size and type of fasteners, and accessories.

PART 2 PRODUCTS

2.3 STEEL RAILING SYSTEM

A. Rails: 1-1/2 inch diameter steel pipe; welded joints. Or as shown on drawings.
B. Fittings: Elbows, T-shapes, wall brackets, escutcheons; cast steel.
C. Mounting: Adjustable brackets and flanges, with steel inserts for casting in. Prepare backing plate for mounting in gyp. board wall with masonry wall behind.
D. Exposed Fasteners: Flush countersunk screws or bolts; consistent with design of railing.
E. Splice Connectors: Steel welding collars threaded collars.
F. Shop and Touch-Up Primer: SSPC 15, Type 1, red oxide.

NOTE: all outside dimensions to meet ADA requirements.

2.4 FABRICATION

A. Fit and shop assemble components in largest practical sizes for delivery to site.
B. Fabricate components with joints tightly fitted and secured. Provide spigots and sleeves to accommodate site assembly and installation.
C. Provide anchors, plates required for connecting railings to structure.
D. Exposed Mechanical Fastenings: Flush countersunk screws or bolts; unobtrusively located; consistent with design of component, except where specifically noted otherwise.

E. Supply components required for anchorage of fabrications. Fabricate anchors and related components of same material and finish as fabrication, except where specifically noted otherwise.
F. Exterior Components: Continuously seal joined pieces by continuous welds. Drill condensate drainage holes at bottom of members at locations that will not encourage water intrusion.
G. Grind exposed joints flush and smooth with adjacent finish surface. Make exposed joints butt tight, flush, and hairline. Ease exposed edges to small uniform radius.
H. Accurately form components to suit stairs and landings, to each other and to building structure.
I. Accommodate for expansion and contraction of members and building movement without damage to connections or members.

PART 3 EXECUTION

3.1 EXAMINATION

A. Verify that field conditions are acceptable and are ready to receive work.

3.2 PREPARATION

A. Clean and strip primed steel items to bare metal where site welding is required.
B. Supply items required to be cast into concrete and or embedded in masonry placed in partitions with setting templates, to appropriate sections.

3.3 INSTALLATION

A. Install components plumb and level, accurately fitted, free from distortion or defects.
B. Anchor railings to structure with anchors, plates.
C. Field weld anchors as indicated on shop drawings. Touch-up welds with primer. Grind welds smooth.
D. Conceal bolts and screws whenever possible. Where not concealed, use flush countersunk fastenings.
E. Assemble with spigots and sleeves to accommodate tight joints and secure installation.

3.4 ERECTION TOLERANCES

A. Maximum Variation From Plumb: 1/4 per story, non-cumulative.
B. Maximum Offset From True Alignment: 1/4 inch.
C. Maximum Out-of-Position: 1/4 inch.

3.5 SCHEDULE

A. As per drawings

END OF SECTION

SECTION 06114

WOOD BLOCKING AND CURBING

PART 1 GENERAL

1.1 SUMMARY

A. Section includes roof curbs, cants, and perimeter nailers; blocking in wall and roof openings; wood furring and grounds; concealed wood blocking for support of toilet and bath accessories, wall cabinets, fire extinguishers, wood trim; telephone and electrical panel back boards; concealed wood blocking for support of toilet and bath accessories, wall cabinets, wood trim; preservative treatment of wood and any other section mentioned below. Also, see sections and drawings for other blocking requriements.

B. Related Sections:
   1. Section 03300 Cast in place concrete.
   2. Section 04830 Unit masonry assemblies.
   3. Section 05400 Metal Stud Framing.
   4. Section 05310 Steel Deck.
   5. Section 06410 Interior Millwork
   6. Section 07530 Single Ply Roofing
   7. Section 08111 Standard Steel Doors
   8. Section 08112 Standard Steel Frames
   9. Section 08331 Overhead Coiling Doors
   10. Section 08410 Aluminum Storefronts.
   11. Section 08413 Glazed aluminum curtain wall.
   12. Section 10160 Metal Toilet Compartments
   13. Section 10522 Fire Extinguishers
   14. Section 10800 Toilet and Bathroom accessories.

1.2 REFERENCES

A. American National Standards Institute:
   1. ANSI A208.1 - Mat Formed Wood Particleboard.

B. American Wood-Preservers Association:
   1. AWPA C2 - All Timber Products - Preservative Treatment by Pressure Process.
   2. AWPA C20 - Structural Lumber - Fire-Retardant Treatment by Pressure Processes.

C. ASTM International:
   1. ASTM E84 - Standard Test Method for Surface Burning Characteristics of Building Materials.

D. National Fire Protection Association:
   1. NFPA 255 - Standard Method of Test of Surface Burning Characteristics of Building Materials.

E. National Institute of Standards and Technology:
   1. NIST PS 20 - American Softwood Lumber Standard.

F. The Redwood Inspection Service:
   1. RIS - Standard Specifications for Grades of California Redwood Lumber.

G. Southern Pine Inspection Bureau:
   1. SPIB - Standard Grading Rules for Southern Pine Lumber.

H. Underwriters Laboratories Inc:
   1. UL 723 - Tests for Surface Burning Characteristics of Building Materials.

I. West Coast Lumber Inspection Bureau:
   1. WCLIB - Standard Grading Rules for West Coast Lumber.

J. Western Wood Products Association:
   1. WWPA G-5 - Western Lumber Grading Rules.

1.3 SUBMITTALS

A. Section 01330 - Submittal Procedures: Submittal procedures.

B. Product Data: Submit technical data on wood preservative and fire retardant treatment materials and application instructions.

1.4 QUALITY ASSURANCE

A. Perform Work in accordance with the following:
   1. Lumber Grading Agency: Certified by NIST PS 20.
   2. Plywood Grading Agency: Certified by APA/EWA.

B. Surface Burning Characteristics:
   1. Fire Retardant Treated Materials: Maximum 25/450 flame spread/smoke developed index when tested in accordance with ASTM E84, NFPA 255, UL 723.

C. Apply label from agency approved by authority having jurisdiction to identify each fire retardant treated material.

PART 2 PRODUCTS

2.1 MATERIALS

A. Lumber Grading Rules: AP&PA, RIS, SPIB, WCLIB, WWPA G-5.

B. Miscellaneous Framing: Stress Group D, Douglas fir, No. 3, southern pine species, 19 percent maximum moisture content after treatment, pressure preservative treat.

C. Plywood: APA/EWA Rated Sheathing, Structural I, Grade C-D; Exposure Durability 1; sanded.

2.2 ACCESSORIES

A. Fasteners and Anchors:
   1. Fasteners: Hot dipped galvanized steel for high humidity and treated wood locations, unfinished steel elsewhere.
   2. Anchors: Toggle bolt type for anchorage to hollow masonry. Expansion shield and lag bolt type for anchorage to solid masonry or concrete. Bolt or ballistic fastener for anchorages to steel.

2.3 FACTORY WOOD TREATMENT

A. Wood Preservative (Pressure Treatment): AWPA C1 using water borne preservative with 0.25 percent retainage.

B. Wood Preservative (Surface Application): Colored type.

C. Fire Retardant Treatment: Pressure treatment, AWPA C20 for lumber and AWPA C27 for plywood, Interior Type, chemically treated and pressure impregnated.

D. Moisture Content After Treatment: Redried.
   1. Lumber: Maximum 19 percent.

2. Structural Panels: Maximum 15 percent.

PART 3 EXECUTION

3.1 EXAMINATION

A. Section 01300 - Administrative Requirements: Verification of existing conditions before starting work.

B. Verify substrate conditions are ready to receive blocking, curbing and framing.

3.2 PREPARATION

A. Coordinate placement of blocking, curbing and framing items.

3.3 INSTALLATION

A. Set members level and plumb, in correct position.

B. Place horizontal members, crown side up.

C. Construct curb members of solid wood sections.

D. Curb roof openings except where prefabricated curbs are provided. Form corners by alternating lapping side members.

E. Coordinate curb installation with installation of decking and support of deck openings, roofing vapor retardant, parapet construction.

F. Space framing and furring 16 inches oc.

G. Secure sheathing to framing members with ends over firm bearing and staggered.

H. Install telephone and electrical panel back boards with plywood sheathing material where required. Size back boards 12 inches beyond size of electrical and telephone panel.

3.4 SITE APPLIED WOOD TREATMENT

A. Apply preservative treatment.

B. Brush apply two coats of preservative treatment on wood in contact with cementitious materials roofing, related metal flashings and treat site-sawn cuts.

C. Allow preservative to dry prior to erecting members.

3.5 SCHEDULES

A. Roof Blocking: S/P/F species, 19 percent maximum moisture content, pressure preservative treatment.

B. Telephone and Electrical Panel Boards: 3/4 inch thick, square edges, site brush applied preservative treated. If drawings don't show location and size of board. Contractor to consider 4 - 4' x 8' panels to be located by owner / architect.

C. All others as indicated or required within this section and in drawings.

END OF SECTION

SECTION 06410
INTERIOR ARCHITECTURAL MILLWORK

PART 1 GENERAL

1.1 SECTION INCLUDES

A. Cabinets, Countertops, see drawings for different counter tops.

B. Hardware, coordinate with specifications and drawings.

1.2 RELATED SECTIONS

A. Section 01300 - Submittal Procedures

B. Section 06410 - Wood Blocking.

C. Section 12366 - Soild Surfacing Countertops.

1.3 REFERENCES

A. ANSI A135.4 - Basic Hardboard.

B. ANSI A208.1 - Mat Formed Wood Particleboard.

C. AWI (Architectural Woodwork Institute) - Quality Standards.

D. BHMA A156.9 - Cabinet Hardware.

E. FS MMM-A-130 - Adhesive, Contact.

F. HPMA (Hardwood Plywood Manufacturer's Association) HP - American Standard for Hardwood and Decorative Plywood.

G. NEMA (National Electric Manufacturers Association) LD3 - High Pressure Decorative Laminates.

H. NHLA (National Hardwood Lumber Association).

I. PS 1 - Construction and Industrial Plywood.

J. PS 20 - American Softwood Lumber Standard.

1.4 SUBMITTALS FOR REVIEW

A. Submit under provisions of Section 01300.

B. Shop Drawings: Indicate materials, component profiles and elevations, assembly methods, joint details, fastening methods, accessory listings, hardware location and schedule of finishes.

C. Product Data: Provide data for hardware accessories.

D. Samples: Submit sample ring illustrating plastic laminate.

E. Samples: Submit minimum of (2) 6x6 in all size samples of wood materials.

F. Samples: Submit samples of drawer pulls, hinges, and illustrating hardware finish.

1.5 QUALITY ASSURANCE

A. Perform work in accordance with AWI Custom quality. Refer to attached copy. Manufacturer to be Certified through the AWI Quality Certification Program QCP.

B. Manufacturer Qualifications: Company specializing in manufacturing the Products specified in this section with minimum three years documented experience.

1.6 DELIVERY, STORAGE, AND PROTECTION

A. Section 01600 - Material and Equipment: Transport, handle, store and protect products.
B. Protect units from moisture damage.

1.7 ENVIRONMENTAL REQUIREMENTS

A. Section 01600 - Material and Equipment: Environmental conditions affecting products on site.

B. During and after installation of work of this section, maintain the same temperature and humidity conditions in building spaces as will occur after occupancy.

PART 2 PRODUCTS

2.1 WOOD MATERIALS : NHLA: FAS grade in accordance to AWI Custom grade.

A. Hardwood Lumber: average moisture content of 6 percent; species as follows:
1. Cabinet Frame: Species birch,
2. Exposed Stiles and Rails: Species birch,.
3. Exposed Fronts and sides: Species birch, bookmatch
4. Exposed Cabinet Doors: Species birch, bookmatch
5. Internal Construction: Species birch,
6. Window Sills: Species Poplar FAS grade for painting, or Red Oak for natural finish. Architect to Select.

2.2 PANEL PRODUCTS

A. Fir Particle Board: ¾” industrial 45lb. Fir Particle Board ANSI A208.1-1999 Grade M-2.
1. Use for Cabinet ends, bottoms, shelves, doors, rails, drawer fronts.
2. Shelves over 36” wide to be 1 inch thick.
3. Particle Board not acceptable for countertops or sink cabinets.

B. Plywood: ¾ inch paint grade birch minimum 7-ply construction E-E or E-4 grade.
1. Use for counter tops, sink cabinet parts, and bases.
2. Use at mechanical rooms at platforms to support a/c units.

C. Hardboard: Hardboard Pressed wood fiber with resin binder standard ¼” smooth two sides for cabinet backs.

D. Melamine:
1. ¾” melamine board equal to Roseburg “RMP” meeting NEMA 1995-GP28 standards.
i. Color White
ii. Melamine is unacceptable for cabinet doors and drawer fronts.
iii. Vinyl Coated board not acceptable.

2. 5/8” Melamine for Blum Metabox System
3. ¼ " Melamine for Semi exposed backs

2.3 MANUFACTURERS - PLASTIC LAMINATE

A. Manufacturers:
1. Formica
2. Nevamare
3. Wilsonart

2.4 LAMINATE MATERIALS

A. Plastic Laminate: NEMA LD 3, color and pattern as selected by Architect.
1. G-P 107-.050 for Countertops
2. G-P 335- .028 vertical grade for all exposed surfaces other than countertops.
3. Cabinet interiors at sliding marker boards shall be considered exposed areas.
4. G-P 350 - .040 posts formed grade for covered countertops at sinks.
5. Type 726 Cabinet Liner “White” .020 thick for all semi-exposed areas of sink cabinets and backs of all cabinet doors and drawers.
6. Backing Sheets BK-20 minimum .020 HPDL. Paper Backers NOT ACCEPTABLE. Cover all concealed areas with backer sheet.

B. Edge Treatment: Cap all exposed and semi exposed cabinet edges with matching PVC edge banding .018 thick.

C. Countertops: Construct with ¾” plywood built up with plywood web frame to 1 ½” thick .050 HPDL surface and edge. Apply HPDL backing sheet.

D. Solid Surface Tops; coordinate construction of cabinets and take all necessary measures during the construction to support and anchor the soild counter tops. Coordinate with drawings. See section 12366 Solid Surfacing Countertops.

2.5 ACCESSORIES

A. Adhesive: Type recommended by AWI and laminate manufacturer to suit application.

B. Fasteners: Size and type to suit application.

C. Bolts, Nuts, Washers, Lags, Pins, and Screws: Of size and type to suit application; galvanized finish in concealed locations and Chrome Plated polished finish in exposed locations.

D. Concealed Joint Fasteners: Threaded steel.

E. Grommets: Outwater Plastics #35-3” Color as selected by Architect.

F. Bumpers: Felt

2.6 HARDWARE

A. Shelf Standards and Rests: KV 155ZC and 256ZC or 32mm system w/ Hafele #282.27.401.
B. Pulls – EPCO # MC-4024-BRC-4” brushed chrome wire type.

C. Hinges: 120 degree concealed equal to Blum #77M5580 or Salice C2R9A99.

D. Drawer Guides: Blum Metabox # 320M5000 w/Blum (22") white epoxy and #330H5500 for drawer with Blum ZRM5500 US Meta File System.

E. Cabinet Locks: Provide cabinet locks equal to National #8053-14A, key alike.

F. Elbow Catch: EPCO # 1018N – Bright Chrome.

G. Hangrod: K.V. #770-1 chrome; saddles K.V. # 734 – Chrome

H. Door Bumps: Silicone type – clear. Hafele # 356.21.428. Apply to all doors and Drawers.

I. Counter Support Bracket: Metal 2"x 18" x 24", color as selected by Architect.

NOTE: All specified items in this section with brand and model are or Approved Equal.

2.7 WOOD TREATMENT PROCESSES

A. Fire Retardant (FR-S Type): Chemically treated and pressure impregnated; capable of providing a maximum flame spread/smoke development in accordance with ASTM E84.

B. Wood Preservative (Surface Application): Clear type.

2.8 SHOP TREATMENT OF WOOD MATERIALS

A. Shop brush apply wood materials requiring UL fire rating, preservatives, to concealed wood blocking.

B. Provide UL approved identification on fire retardant treated material.

C. Deliver fire retardant treated materials cut to required sizes. Minimize field cutting.

2.9 FABRICATION

A. Shop assemble casework for delivery to site in units easily handled and to permit passage t hrough building openings.

B. Fit shelves, doors, and exposed edges with 3/8 inch matching hardwood edging. Use one piece for full length only, to assure matching and continues grain.

C. Cap exposed plastic laminate finish edges with material of same finish and pattern.

D. Door and Drawer Fronts: 3/4 inch thick; flush style.

E. When necessary to cut and fit on site, provide materials with ample allowance for cutting. Provide trim for scribing and site cutting.

F. Apply plastic laminate finish in full-uninterrupted sheets consistent with manufactured sizes. Fit corners and joints hairline; secure with concealed fasteners.

G. Apply laminate backing sheet to reverse side of plastic laminate finished surfaces.
H. Mechanically fasten back splash to countertops with steel brackets at 16 inches on center. pply trim primer in areas where cabinets are away from wall.

I. Provide cutouts for plumbing fixtures, inserts, appliances, outlet boxes, fixtures, and fittings. Verify locations of cutouts from on-site dimensions. Prime paint cut edges.

2.10 SITE FINISHING

A. At finished wood surfaces, apply wood filler in exposed nail and screw indentations.

B. Seal surfaces in contact with cementious materials.

C. Expose to view surfaces: No exposed materials, Finish shall be plastic laminate.

D. Semi exposed surfaces: Finish shall be melamine, includes shelving.

PART 3 EXECUTION

3.1 EXAMINATION

A. Coordination and Meetings: Verification of existing conditions before starting work.

B. Verify adequacy of backing and support framing.

C. Verify location and sizes of utility rough in associated with work of this section.

3.2 INSTALLATION

A. Set and secure casework in place; rigid, plumb, and level.

B. Use fixture attachments in concealed locations for wall mounted components.

C. Use concealed joint fasteners to align and secure adjoining cabinet units and counter tops.

D. Carefully scribe casework abutting other components, with maximum gaps of 1/32 inch. Do not use additional overlay trim for this purpose.

E. Secure cabinet and counter bases to floor using appropriate angles and anchorages.

F. Countersink anchorage devices at exposed locations. Conceal with solid wood plugs of species to match surrounding wood; finish flush with surrounding surfaces.

3.3 ADJUSTING

A. Section 01400 - Quality Control: Adjust installed work. Test installed work for rigidity and ability to support loads.

B. Adjust moving or operating parts to function smoothly and correctly.

3.4 CLEANING

A. Section 01700 - Contract Closeout: Clean casework, counters, shelves, hardware, fittings, and fixtures.

B. Cabinets; coordinate with drawings.

END OF SECTION

SECTION 06610

GLASS FIBER REINFORCED PLASTIC PANELS

PART 1 GENERAL

1.1 SECTION INCLUDES

A. Glass fiber reinforced plastic panels.
B. Installation moldings.

1.2 RELATED SECTIONS

A. Section 07900 - Joint Sealers: Perimeter sealant to adjacent construction
B. Section 09260 – Gypsum Board System

1.4 REFERENCES

A. UL - Fire Resistance Directory.
B. Warnock Hersey - Certification Listings.

1.6 SUBMITTALS FOR REVIEW

A. Section 01300 - Submittals: Procedures for submittals.
B. Product Data: Provide data on specified component products.
C. Shop Drawings: Indicate dimensions, adjacent construction, materials, thicknesses, fabrication details, required clearances, field jointing, tolerances, colors, finishes, methods of support, integration of plumbing and electrical components, and anchorages.
D. Samples: Submit sample illustrating color, texture, and finish.

1.7 OPERATION AND MAINTENANCE DATA

A. Submit under provisions of Section 01700.
B. Maintenance Data: Include instructions for stain removal, surface and gloss restoration.

1.8 QUALITY ASSURANCE

A. Shop Fabricator: Company specializing in architectural glass fiber and resin components with 5 years documented experience.

1.9 REGULATORY REQUIREMENTS

A. Conform to applicable code for a flame/smoke rating requirements.

1.10 MOCK-UP

A. Section 01400 - Quality Control: Requirements for mock-up.
B. Locate where directed.
C. Mock-up may not remain as part of the Work.

1.11 DELIVERY, STORAGE, AND PROTECTION

A. Section 01600 - Material and Equipment: Transport, handle, store, and protect products.
B. Protect components from damage by retaining shipping protection in place until installation.

1.12 ENVIRONMENTAL REQUIREMENTS

A. Section 01600 - Material and Equipment: Environmental conditions affecting products on site.
B. Do not install site fabricated components when site conditions may be detrimental to successful installation.
C. Maintain temperature and humidity conditions favorable to proper curing of resin during and after installation.

PART 2 PRODUCTS

2.1MANUFACTURERS

A. Manufacturers:
   1. Marlite. FRP panel
   2. BP Chemicals; Tufliner fiberglass reinforced plastic panel.
   3. Kemlite Company; Fire-X Glasbord..
   4. Nudo Products Inc.; Fiber Lite Liner Panels.
   5. Section 01600 - Materials and Equipment: Substitutions Permitted .

2.2MATERIALS

A. Fiberglass Reinfoced plastic panel conforming to the following:

Thickness	0.090 inches
Tensil Strength	5,500 psi
Flexural Strength	12,000 psi
Gardner Impact Strength	16 in. lbs.
Barcol Hardness	55
Size	4 x 9 feet
Finish	Smooth
Color	White
Fire resistance	Class A as per ATSM E-84
Chemical Resistance	reference ASTM D-543

B. Installation Accessories:
   1. PVC Moldings: Provide inside corner, outside corner, divider moldings, endcap and base moldings.
   2. Adhesive: Latex based non flammable adhesive.

PART 3 EXECUTION

3.1EXAMINATION

A. Verify substrate openings under provisions of Section 01039.
B. Verify that surfaces are ready to receive work and dimensions are as indicated on shop drawings.

3.2INSTALLATION

A. Install fabrications in accordance with shop drawings and fabricator's instructions.

3.3TOLERANCES

A. Maximum variation from true position: 1/4 inch.
B. Maximum offset from true alignment: 1/8 inch.

3.4CLEANING

A. Clean work under provisions of 01700.
B. Clean components of foreign material without damaging finished surface.
C. Hand rub smooth surfaces with polishing cream.
D. Clean fabrications in accordance with fabricator's instructions.

3.5PROTECTION OF FINISHED WORK

A. Protect finished work under provisions of Section 01500.
B. Place protective structural covering over installed units.

3.6SCHEDULE

A. Install at all walls, full height at Warming Kitchen 110 and Kitchen General Storage 111.

END OF SECTION

SECTION 07160
BITUMINOUS DAMPPROOFING

PART 1 GENERAL

1.01 SECTION INCLUDES

A. Cold applied asphalt bitumen damproofing.

1.02 RELATED SECTIONS

A. Section 02223 - Backfilling.
B. Section 03310 - Concete surfaces.
C. Section 04200 - Masonry surfaces.

1.03 REFERENCES

A. ASTM D449 - Asphalt Used in Dampproofing and Waterproofing.
B. ASTM D4022 - Coal Tar Roof Cement.

1.04 SUBMITTALS

A. Submit under provisions of Section 01300.
B. Product Data: Provide properties of primer, bitumen, and mastics.
C. Manufacturer's Installation Instructions: Indicate special procedures and perimeter conditions requiring special attention.

1.05 QUALITY ASSURANCE

A. Perform Work in accordance with NRCA Waterproofing Manual.
B. Maintain one copy copies of each document on site.

1.06 QUALIFICATIONS

A. Applicator: Company specializing in performing the work of this section with minimum Five years documented experience.

1.07 ENVIRONMENTAL REQUIREMENTS

A. Maintain ambient temperatures above 40 degrees F for 24 hours before and during application until membrane has cured.

PART 2 PRODUCTS

2.01 MANUFACTURERS
A. EUCO - Euclid Chemical Co. of Cleveland Ohio.
B. Celotex Corporation.
C. GAF Corporation
D. Koppers Company, Inc.
E. Substitutions: Under provisions of Section 01600.

2.02 COLD ASPHALTIC MATERIALS

A. Asphalt Mastic: ASTM D491.
B. Asphalt Primer: ASTM D41, compatible with substrate.
C. Asphalt Cement: ASTM D2822 Type I.

2.03 ACCESSORIES

A. Flexible Flashings: 3/16 inch thick, EDPM.

PART 3 EXECUTION

3.01 EXAMINATION

A. Verify substrate surfaces are durable, free of matter detrimental to adhesion or application of dampproofing system.
B. Verify items which penetrate surfaces to receive dampproofing are securely installed.

3.02 PREPARATION

A. Protect adjacent surfaces not designated to receive dampproofing.
B. Clean and prepare surfaces to receive dampproofing in accordance with manufacturer's instructions.
C. Do not apply dampproofing to surfaces unacceptable to manufacturer or applicator.
D. Apply mastic to seal penetrations, small cracks, or minor honeycomb in substrate.

3.03 APPLICATION

A. Prime surfaces in accordance with manufacturer's instructions.
B. Apply cold bitumen by trowel.
C. Apply bitumen at a temperature limited by equiviscous temperature (EVT) plus or minus 25 degrees F; finish blowing temperature not to be exceeded for four hours.
D. Apply bitumen in two coats, continuous and uniform, at a rate specified by manufacturer.
E. Apply from 4 inches below finish edge of planter top of wall elevation.
F. Seal items projecting through dampproofing surface with mastic. Seal watertight.

3.04 PROTECTION

A. Protect membrane from damage by adhering protection board, applied with mastic over dampproofing surface. Scribe and cut boards around projections and interruptions.
B. Neatly fit boards tight around pipe and other projections.

3.05 SCHEDULE

A. All raised planters adjacent towers: Interior face of planter wall; Two coatings of asphalt dampproofing.

END OF SECTION

SECTION 07213
BATT INSULATION

PART 1 GENERAL

1.01 SECTION INCLUDES

A. Batt insulation installed over gypsum board ceilings, metal stud wall, etc

1.03 REFERENCES

A. ASTM C665 - Mineral Fiber Blanket Thermal Insulation for Light Frame Construction and Manufactured Housing.
B. ASTM E84 - Test Method for Surface Burning Characteristics of Building Materials.
C. NFPA 255 - Test of Surface Burning Characteristics of Building Materials.
D. UL 723 - Tests for Surface Burning Characteristics of Building Materials.

1.05 SUBMITTALS

A. Submit under provisions of Section 01300.
B. Product Data: Provide data on product characteristics, performance criteria and limitations.
C. Manufacturer's Certificate: Certify that products meet or exceed specified requirements.

1.06 COORDINATION

A. Coordinate work under provisions of Section 01039
B. Coordinate the work with installation of metal stud partitions and installations between steel joists at underside of deck.

PART 2 PRODUCTS

2.01 MANUFACTURERS - INSULATION MATERIALS

A. CertainTeed Corp.
B. Owens Corning
C. Manville Corp.
D. Substitutions: Under provisions of Section 01600.

2.02 MATERIALS

A. Batt Insulation: ASTM C665; preformed glass fiber batt; conforming to the following:
   1. Thermal Resistance Insulation; R-19 minimum.
      Sound Attenuation Batt Insulation: 3-1/2” and 5-1/2”, (thickness to fit wall depth)
   2. Roll Size: as required for application.
   4. Facing: Kraft vapor retarder faced (Thermal) and unfaced (Sound)
   5. Flame/Smoke Properties: in accordance with NFPA 255.

PART 3 EXECUTION

3.01 EXAMINATION

A. Field verify site conditions under provisions of Section 01040
B. Verify that substrate, adjacent materials, and insulation are dry and ready to receive insulation.

3.02 INSTALLATION

A. Install insulation in accordance with manufacturer's instructions.
B. Install up against inside surface of metal roof deck suspended with 16 gauge line wire without gaps or voids. Do not compress insulation.
C. Trim insulation neatly to fit spaces. Insulate miscellaneous gaps and voids.
D. Fit insulation tight in spaces and tight to exterior side of mechanical and electrical services within the plane of insulation.
E. Install with factory applied vapor retarder membrane facing warm side of building spaces. Lap ends and side flanges of membrane over framing members.
F. Staple facing flanges in place at maximum 6 inches or tape in place. Retain in place with wire mesh secured to framing members.
G. Tape seal butt ends, lapped flanges, and tears or cuts in membrane.
H. Metal Framing: Place vapor retarder on warm side of insulation; lap and seal sheet retarder joints over member face.
K. Coordinate work of this section with construction specified in Section 09111.

3.03 SCHEDULES

A. Ceiling Insulation: R-19
B. Perimeter Wall Insulation: R-19
C. Interior Walls: 3-1/2” and 5-1/2”.

Coordinate with drawings for location.

END OF SECTION

SECTION 07420

SOLID CLADDING PANEL SYSTEM

PART 1 GENERAL

1.1 SECTION INCLUDES

A. Exterior solid phenolic cladding panel system (refer to HPL High Pressure Compact Laminate on drawings) and accessories as required for a complete drained and back-ventilated rainscreen system.
   1. Wall panels.
   2. Fascia.
   3. Horizontal soffits.
   4. Storefront panels.

B. Interior solid phenolic cladding panel system and accessories.

1.2 RELATED SECTIONS

A. Section 05500 - Metal Fabrications; additional sub framing, Z girts to accommodate exterior insulation is not in the scope of Section 07420.

B. Section 07213 – Batt Insulation; exterior insulation, if required for NFPA 285 compliance, is not included in the scope of Section 07420.

C. Section 08410 - Entrances and Storefronts.

D. Section 09260 - Gypsum Board.

1.3 REFERENCES

A. ASTM International (ASTM):
   1. ASTM B 117 - Standard Practice for Operating Salt Spray (Fog) Apparatus.
   2. ASTM D 635 - Standard Test Method for Small Scale Burning.
   3. ASTM D 1929 - Standard Test Method for Ignition Temperature.
   4. ASTM D 2244 - Standard Practice for Calculation of Color Tolerances and Color Differences from Instrumentally Measured Color Coordinates.
   5. ASTM D 2247 - Standard Practice for Testing Water Resistance of Coatings in 100% Relative Humidity.
   6. ASTM E 84 - Standard Test Method for Surface Burning Characteristics of Building Materials.
   7. ASTM E 119 - Standard Test Method for Fire Rated or Fire Resistive Construction.
   8. ASTM E 330 - Standard Test Method for Structural Performance of Exterior Windows, Curtain Walls, and Doors Under the Influence of Wind Loads.

B. European Standards (EN):
   1. EN 438-2 - Decorative High Pressure Laminate (HPL) Sheets Based on Thermosetting Resins - Determination of Properties.
   2. EN 12524 - Building Materials and Products, Hygrothermal Properties, Tabulated Design Values.

C. International Organization for Standardization (ISO):
   1. ISO 105 A02-93 - Tests for Color Fastness -- Part A02: Grey scale for assessing change in color.
   2. ISO 178 - Determination of Flexural Properties.

3. ISO 527-3 - Determination of Tensile Properties.
4. ISO 846 - Evaluation of the Action of Organisms.

D. National Fire Protection Association (NFPA):
1. NFPA 268 - Standard Test Method for Determining Ignitibility of Exterior Wall Assemblies Using a Radiant Heat Energy Source.
2. NFPA 285 - Standard Fire Test Method for Evaluation of Fire Propagation Characteristics of Exterior Non-Load-Bearing Wall Assemblies Containing Combustible Components

1.4 SUBMITTALS

A. Submit under provisions of Section 01300.

B. Product Data: Manufacturer's data sheets on each product to be used, including:
1. Preparation instructions and recommendations.
2. Storage and handling requirements and recommendations.
3. Installation methods.

C. Shop Drawings: Submit plan, section, elevation and perspective drawings necessary to describe and convey the layout, profiles and product components, including edge conditions, panel joints, fixture location, anchorage, accessories, finish colors, patterns and textures.

D. Code Compliance: Documents showing product compliance with local building code shall be submitted prior to the bid. These documents shall include, but not be limited to, appropriate Evaluation Reports and/or test reports supporting the use of the product. Alternate materials must be approved by the architect of record prior to the bid date.

E. Engineering Calculations: Submit engineering calculations as required by the local building code, showing that the installed panels and attachments system meets the wind load requirements for the project.

F. Selection Samples: For each finish product specified, two complete sets of color chips representing manufacturer's full range of available colors and patterns. Please note that samples are only representative for color and pattern and not for thickness or edge finish. Metallic colors may also show a slight fluctuation in appearance do to the metal flake orientation from batch to batch.

G. Verification Samples: For each finish product specified, two samples a minimum of 3.5 inches by 3.5 inches (89 mm by 89 mm) representing actual product, color, and patterns. Sample edges may vary from field panel edges.

H. Operation and Maintenance Data: Submit operation, maintenance, and cleaning information for products covered under this section.

1.5 QUALITY ASSURANCE

A. Manufacturer Qualifications: All primary panel products specified in this section will be supplied by a single manufacturer with a minimum of ten years experience.
1. Products covered under the Work listed in this section are to be manufactured in an ISO 9001 certified facility.

B. Installer Qualifications: All products listed in this section are to be installed by a single installer trained and approved by the manufacture or representative.

1.6 GREENGUARD® and GREENGUARD® Children & SchoolsTM 947-5.

A. Manufacturer's Field Services: Upon Owner's request, provide manufacturer's field service consisting of product use recommendations and periodic site visits for inspection of product installation in accordance with manufacturer's instructions.

B. Mock-Up: Provide a mock-up for evaluation of the product and application workmanship.
   1. Do not proceed with remaining work until workmanship, color, and sheen are approved by Architect.

C. Pre-installation Meetings: Conduct pre-installation conference to verify project requirements, substrate conditions, manufacturer's installation instructions and manufacturer's warranty requirements.

1.7 DELIVERY, STORAGE, AND HANDLING

A. Delivery:
   1. During transportation, use stable, flat pallets that are at least the same dimension as the sheets.
   2. Materials shall be packaged to minimize or eliminate the possibility of damage during shipping. Items such as wooden side boards, wooden lid, and spacers or protective sheeting between panels shall be used to protect the panels from surface and/or edge damage.

B. Storage:
   1. Store products in an enclosed area protected from direct sunlight, moisture and heat. Maintain a consistent temperature and humidity.
   2. Store products in manufacturer's unopened packaging until ready for installation.
   3. Stack panels using protective dividers to avoid damage to decorative surface.
   4. For horizontal storage, store sheets on pallets of equal or greater size as the sheets with a protective layer between the pallet and sheet and on top of the uppermost sheet.
   5. Do not store sheets, or fabricated panels vertically.

C. Handling:
   1. Remove protective film within 24 hours of the panels being removed from the pallet.
   2. When moving sheets, lift evenly to avoid dragging panels across each other and scratching the decorative surface.
   3. Remove all labels and stickers immediately after installation.

1.8 PROJECT CONDITIONS

A. Maintain environmental conditions (temperature, humidity, and ventilation) within limits recommended by manufacturer for optimum results. Do not install products under environmental conditions outside manufacturer's absolute limits.

B. Field Measurements: Verify actual measurements/openings by field measurements performed by the installer prior to release for fabrication. Recorded measurements to be indicated on shop drawings based on field measurements provided by the installer. Coordinate field measurements and fabrication schedule with construction progress to avoid construction delays.

1.9 WARRANTY

A. Warranty: At project closeout, provide manufacturer's limited ten year warranty covering defects in materials. Warranty only available when material installed by an

installation contractor trained and approved by the manufacturer's representative.

PART 2 PRODUCTS

2.1 MANUFACTURERS

A. Acceptable Manufacturer: Trespa International B.V.; P.O. Box 110, 6000 AC Weert Wetering 20, 6002 SM Weert The Netherlands; www.trespa.com.

B. Acceptable Manufacturer's Representative: Trespa North America, Ltd.; 12267 Crosthwaite Cir., Poway, CA 92064. ASD. Toll Free Tel: (800)4-TRESPA. Tel: (858) 679-2090. Fax: (858) 679-9568. Email: info.northamerica@trespa.com Web: http://www.trespa.com/na.

C. Substitutions: Not permitted.

D. Requests for substitutions will be considered in accordance with provisions of Section 01600.

2.2 WALL PANELS

A. Solid Phenolic Wall Panels: Trespa Meteon by Trespa International as represented by Trespa North America, LTD.
   1. Material: Solid panel manufactured using a combination of high pressure and temperature to create a flat panel created from thermosetting resins, homogenously reinforced with wood-based fibers and an integrated decorative surface or printed décor.
   2. Color on Primary Face: as shown on drawings with black reverse.
   3. Color: As shown on drawings and selected by the Architect from manufacturer's standard color palette.
   4. Finish: Satin sheen.
   5. Panel Core: Fire retardant (FR) black core.
   6. Panel Thickness: 5/16 inch (8 mm).
   7. Physical Properties:
      a. Modulus of Elasticity: 1,300,000 psi (9000 N/mm2) minimum, ISO 178.
      b. Tensile Strength: 10,100 psi (70 N/mm2) minimum, ISO 527-2.
      c. Flexural Strength: 14,500psi (120 N/mm2) minimum, ISO 178.
      d. Thermal Conductivity: 2.1 BTU/inch/ft2.hr.°F, EN 12524.
      e. Structural Performance (ASTM E330):
         1) Panels shall be designed to withstand the Design Wind Load based upon the local building code, but in no case less than 15 pounds per square foot (psf). Wind load testing shall be done in accordance with this standard to obtain the following results:
         2) Normal to the plane of the wall, the maximum panel deflection shall not exceed L/175
         3) Normal to the plane of the wall between supports, deflection of the aluminum sub-framing members shall not exceed L/175 or 3/4 inch, whichever is less
            a) At 1-1/2 times design pressure, permanent deflection of framing members shall not exceed L/100 of span length and components shall not experience failure or gross permanent distortion.
            b) If system tests are not available, mock ups shall be constructed and tests performed under the direction of an independent third party laboratory which show compliance to the minimum standards listed above.
   8. Fire Performance:

a. Flame Spread: Class A, ASTM E 84.
b. Smoke Development: Less than 450, ASTM E 84.
c. Ignition Temperature: Greater than 650 degree F (350 degree C) above ambient, ASTM D1929.
d. Burning Classification: CC1 or CC2, ASTM D635.
e. When required for compliance with local building codes, the wall cladding assembly shall show no degradation of the rating of Fire Resistant Assemblies, ASTM E119.
f. When required for compliance with local building codes, the wall cladding assembly shall meet the performance requirements for Multi Story construction, NFPA 285.
g. When required for compliance with local building codes, the wall cladding assembly shall not ignite when exposed to a radiant heat energy source, NFPA 268.

9. Finish Performance: Electron Beam Cure resin in conformance with the following general requirements:
   a. Color: As selected by the architect/engineer from manufacturer's standard colors or a custom color to be matched by the panel supplier.
   b. Humidity Resistance: No formation of blisters when subjected to condensing water fog at 100% relative humidity and 100 degree F (38 degree C) for 3000 hours, ASTM D 2247.
   c. Salt Spray Resistance: Corrosion creepage from scribe line (1/16 inch (1.6 mm) max.) and minimum blister rating of 8 within the test specimen field, ASTM B117.
   d. Weather Exposure: Accelerated - 3000 hours in Atlas Type Weatherometer using cycle of 90 minutes light and 30 minutes diminished light and demineralized water with a maximum color change of 5 Delta E units from the original color according to ASTM D-2244, with the exception of Uni-Colors A12.3.7 / A18.3.5 / A04.1.7, which will not deviate more than 10 Delta E units from original color according ASTM D-2244.
   e. Color Stability: The decorative surface comply with, classification, 4 - 5 measured with the grey scale according to ISO 105 A02-93 according to test method EN 438-2:29.
   f. Microbial Characteristics: Will not support micro-organic growth (ISO 846).

B. Mounting System:
   1. TS110 - Exposed fastening on fixed depth aluminum sub-framing.

C. Aluminum Sub Structure: Aluminum sub-structure designed to withstand structural loading due to wind load and the dead load of the panel, painted as required to conceal behind the open joinery of the attachment system.
   1. Extrusions, including corner closures, joint closures and vent screens, formed members, sheet, and plate shall conform with the recommendations of the manufacturer.

D. Extruded Aluminum Trim: Color as specified in the finish schedule.

E. Fasteners (Concealed/Exposed): Fasteners shall be non-corrosive and as recommended by panel manufacturer. Exposed fasteners shall be colored to match panels where required by the architect.

F. Panel Corner Profile:
   1. Dimensions: 143.70 inches by 11.81 inches by 11.81 inches (3650 by 300 by 300 mm) with a 5/16 inch (8 mm) thick by 3/4 inch (19 mm) radius.

2.3 FABRICATION

A. Panels: Solid phenolic impregnated kraft paper wall panels with no voids, air spaces or foamed insulation in the core material. Accessory items in accordance with manufacturer's recommendations and approved submittals

B. Panel Weight: 8 mm (2.4 lb/ft2), 10 mm (3 lb/ ft2), 13 mm (3.8 lb/ ft2).

C. Panel Bow: = 2 mm / m (= 0.079 inch/39.38 inches).

D. Panel Dimensions: Field fabrication shall be allowed where necessary, but shall be kept to an absolute minimum. All fabrication shall be done under controlled shop conditions when possible.

E. Appearance: Panel lines, breaks, and angles shall be sharp, true, and surfaces free from warp and buckle

PART 3 EXECUTION

3.1 EXAMINATION

A. Do not begin installation until substrates have been properly prepared.

B. Surfaces to receive panels shall be even, smooth, dry, and free from defects detrimental to the installation of the panel system. Notify Contractor in writing of conditions detrimental to proper and timely completion of the work.

C. Confirm exterior sheathing is plumb and level, with no deflection greater than 1/4 inch (6 mm) in 20 feet (6096 mm).

D. If substrate preparation is the responsibility of another installer, notify Architect of unsatisfactory preparation before proceeding. Do not proceed with installation until unsatisfactory conditions have been corrected.

3.2 PREPARATION

A. Clean surfaces thoroughly prior to installation.

B. Prepare surfaces using the methods recommended by the manufacturer for achieving the best result for the substrate under the project conditions.

3.3 INSTALLATION

A. Install solid phenolic wall panels and sub-frame system in accordance with manufacturer's instructions.

B. Install solid phenolic wall panels plumb and level and accurately spaced in accordance with manufacturer's recommendations and approved submittals and drawings.

C. Anchor panels and sub-framing securely per engineering recommendations and in accordance with approved shop drawings to allow for necessary movement and structural support.

D. Fasten solid phenolic wall panels with fasteners approved for use with supporting substrate.

E. Do not install panels or component parts which are observed to be defective or

damaged including, but not limited to: warped, bowed, abraded, scratched, and broken members.

F. Do not cut or trim component parts during installation in a manner that would damage the finish, decrease the strength, or result in visual imperfection or a failure in performance. Return component parts with require alteration to the shop for re-fabrication or replacement.

G. Install corner profiles and trim with fasteners appropriate for use with adjoining construction as indicated on the Contract Drawings and as recommended by manufacturer.

3.4 ADJUSTING AND CLEANING

A. Remove masking or panel protection as soon as possible after installation. Any masking intentionally left in place after panel installation on an elevation, shall become the responsibility of the General Contractor to remove.

B. Adjust final panel installation so that all joints are true and even throughout the installation. Panels out of plane shall be adjusted with the surrounding panels to minimize any imperfection.

C. Repair panels with minor damage. Remove and replace panels damaged beyond repair as a direct result of the panel installation. After installation, panel repair and replacement shall become the responsibility of the General Contractor.

D. Clean finished surfaces as recommended by panel manufacturer. After installation cleaning, cleaning during construction shall become the responsibility of the General Contractor.

END OF SECTION

SECTION 07464

FIBER-CEMENT SIDING

PART 1 - GENERAL

1.01 RELATED DOCUMENTS

A. Drawings and general provisions of the Contract, including General and Supplementary Conditions and Division 01 Specification Sections, apply to this Section.

1.02 SUMMARY

A. Section includes fiber-cement siding.

1.03 COORDINATION

A. Coordinate siding installation with flashings and other adjoining construction to ensure proper sequencing.

1.04 PREINSTALLATION MEETINGS

A. Preinstallation Conference: Conduct conference at Project site.

1.05 ACTION SUBMITTALS

A. Product Data: For each type of product. Include construction details, material descriptions, dimensions of individual components and profiles, and finishes.

B. Samples for Verification: For each type, color, texture, and pattern required.

1. 12-inch- long-by-actual-width Sample of siding.
2. 12-inch- long-by-actual-width Samples of trim and accessories.

1.06 DELIVERY, STORAGE, AND HANDLING

A. Deliver and store packaged materials in original containers with labels intact until time of use.

B. Store materials on elevated platforms, under cover, and in a dry location.

PART 2 - PRODUCTS

2.01 MANUFACTURERS

A. Source Limitations: Obtain products, including related accessories, from single source from single manufacturer.

2.02 FIBER-CEMENT SIDING

A. General: ASTM C 1186, Type A, Grade II, fiber-cement board, noncombustible when tested according to ASTM E 136; with a flame-spread index of 25 or less when tested according to ASTM E 84.

B. Labeling: Provide fiber-cement siding that is tested and labeled according to ASTM C 1186 by a qualified testing agency acceptable to authorities having jurisdiction.

C. Nominal Thickness: Not less than 5/16 inch.

D.

2.03 ACCESSORIES

A. Siding Accessories, General: Provide starter strips, edge trim, outside and inside corner caps, and other items as recommended by siding manufacturer for building configuration.

1. Provide accessories matching color and texture of adjacent siding unless otherwise indicated.

B. Flashing: Provide flashing complying with Section 07 62 00 "Sheet Metal Flashing and Trim" at window and door heads and where indicated.

C. Fasteners:

1. For fastening to metal, use ribbed bugle-head screws of sufficient length to penetrate a minimum of 1/4 inch, or three screw-threads, into substrate.

PART 3 - EXECUTION

3.01 EXAMINATION

A. Examine substrates for compliance with requirements for installation tolerances and other conditions affecting performance of fiber-cement siding and related accessories.

B. Proceed with installation only after unsatisfactory conditions have been corrected.

3.02 PREPARATION

A. Clean substrates of projections and substances detrimental to application.

3.03 INSTALLATION

A. General: Comply with manufacturer's written installation instructions applicable to products and applications indicated unless more stringent requirements apply.

1. Do not install damaged components.
2. Install fasteners no more than 24 inches o.c.

B. Install joint sealants as specified in Section 07900 "Joint Sealants" and to produce a weathertight installation.

3.04 ADJUSTING AND CLEANING

A. Remove damaged, improperly installed, or otherwise defective materials and replace with new materials complying with specified requirements.

B. Clean finished surfaces according to manufacturer's written instructions and maintain in a clean condition during construction.

END OF SECTION 07464

SECTION 07530

SINGLE PLY ROOFING

1.0 GENERAL

1.01 GENERAL NOTES

A. Preceding the start up of job, the contractor shall decide to his satisfaction that all the specifications are workable as specified, that there is nothing that would deter the contractor's required guarantee, and that no existing conditions at the site prevent the contractor from performing the job in a professional and safe manner. When the job starts, it will be assumed that the existing conditions and the specifications are approved by the contractor.

B. Detailed drawings and dimensions contained in these specifications shall be assumed to be approximate. If work requirements at the jobsite disclose an alteration to the dimensions of this specification, the contractor shall immediately contact the owner’s representative.

1.02 QUALITY ASSURANCE

A. All work performed by the contractor shall be done by competent, highly skilled workmen equipped with equipment and tools necessary to perform all construction in accordance with this specification and detail drawings. Any and all substandard work will be rejected.

B. Contractors shall provide verification that they have successfully installed mechanically attached thermoplastic single ply roof systems of the type specified herein for a minimum of five years prior to the bid date.

C. The contractor shall develop and present a verifiable in-house contractor Quality Control Program and OSHA Sanctioned Safety Program to the building owner, which can be followed during the construction of the TPO roof system.

D. All roofing system manufacturers shall meet or exceed the most recent and exacting Quality Control Standards as defined by ISO. All key components of the roofing system shall have been produced in an ISO Certified manufacturing facility.

1.03 JOB CONDITIONS

A. Environmental Requirements:

1. Work shall only begin when the contractor has decided to his satisfaction, that all specifications are workable as specified, and that the contractor can meet project and code requirements.

2. Do not begin work when inclement weather is forecast.

3. Roof application shall not proceed when there is moisture present in any form on the deck including but not limited to rain, dew, ice, frost or snow.

4. The contractor shall be responsible for verifying the existing and forecasted weather conditions to determine when the conditions are acceptable for roof work.

5. Do not apply roofing membrane, insulation or any component of the roofing system to a frozen deck.

6. Roof application shall not proceed when the ambient air temperature is below 30°F (-1.1ºC), including the wind chill factor.

7. The contractor shall be prepared at all times to protect any uncompleted roof work from rapid changes in the weather. If work continues during sudden rains and the contractor fails to protect moisture sensitive roofing components or the interior of the building, then all wet or damaged areas and materials shall be removed and replaced at the contractor's expense.

8. The contractor shall observe the provisions of sections 1.09, regarding material storage and handling of the roofing products in cold weather.

B. Areas of the substrate where periodic ponding water can occur shall be brought to the attention of the general contractor and the owner's representative and corrected prior to the installation of the roof system.

C. Ensure that the roof deck is structurally sound to support the live and dead load requirements of the new roofing system and rigid enough to support construction traffic. Do not store or load the roof deck over the load capacity. The roofing contractor shall verify that the structural decking and roof terminations have been accepted by the owner's representative prior to proceeding with the roofing activity.

1.04 SYSTEMS DESCRIPTION

A. Mechanically Attached Single Ply TPO Roofing System:

1. 72 mil mechanically attached thermoplastic TPO sheet roof membrane system over rigid insulation.

1.05 PERFORMANCE REQUIREMENTS

A. Comply with local building code and all other applicable codes.

B. Underwriters Laboratories, Inc. (U.L.) Class A fire hazard classification

C. Factory Mutual Research Corporation (FM) Class 1-90 windstorm classification.

1.06 GUARANTEE REQUIREMENTS

A. The contractor shall provide the owner with a Twenty (20) Year No Dollar Limit Type Warranty upon completion of the project. The warranty will cover all material and labor needed to maintain the roof system in a leak free condition.

B. The warranty shall provide for the repair of any accidental punctures, up to 16 man hours per year, for the life of the warranty at no additional charge to the owner.

C. No prorated warranties will be accepted.

D. In addition to addressing the watertight integrity of the roofing system, the warranty shall additionally stipulate that the TPO membrane will meet the US Department of Energy "Energy Star" reflectivity guidelines for a period of ten (10) years.

1.07 SUBMITTALS

A. Submit most recent product samples and literature for the TPO Roofing System applicable to this specification. Submittals shall include technical data sheets for the TPO membrane, adhesives and sealants, all flashing accessories, mechanical fasteners, roof insulation, plus related sheet metal items such as coping, counter flashing and edge metal.

B. Submit a recent photostat copy of a letter or certificate, signed by an authorized representative of the TPO system supplier, stating that the contractor is approved by the manufacturer to install the specified roofing system and obtain the required warranty.

C. Submit a letter, signed by an authorized technical representative of the TPO system supplier, stating that the plans and specifications for this project have been reviewed by the manufacturer and that this project is eligible to receive the required warranty. This letter shall include any and all conditions, exceptions or exclusions made by the manufacturer.

1.08 REFERENCES

A. National Roofing Contractors Association (NRCA) - Roofing and Waterproofing Manual

B. Underwriters Laboratories (U.L.) - Fire Hazard Classification

C. ANSI/UL – 790 External Fire Resistance Classification

D. ANSI/UL – 263 Internal Fire Resistance Classification

E. American Society of Testing and Materials (ASTM) E-108 – Test Methods for Fire Tests of Roof Coverings.

F. American Society of Testing and Materials (ASTM) E-119 – Test Methods for Fire Tests of Building Construction.

G. Factory Mutual Loss Prevention Data Sheet (FM – LPDS) 1-29 – Guidelines for Wind Speed Design.

H. Factory Mutual Research Corporation (F.M.R.C.) – Approval Guide

I. Sheet Metal Air Conditioning Contractors National Association, Inc. (SMACNA) - "Architectural Sheet Metal Manual"

J. ASTM C 1289 – Standard specification for Faced Rigid Cellular Polyisocyanurate Thermal Insulation Board.

K. ASTM D 6878-03- Standard specification for thermoplastic polyolefin based sheet roofing.

1.09 MATERIAL STORAGE, DELIVERY AND HANDLING

A. Deliver materials to the jobsite on pallets, in manufacturer's original wrappers, with seals and labels intact, dry and undamaged.

B. Seals and labels shall indicate name of manufacturer, material name and shall bear the markings of UL and FM where applicable.

C. At the job site, no material should be stored than will be used within two weeks. For periods longer than two weeks, the materials should be properly warehoused, i.e., dry, ventilated, on pallets, etc. No more material should be stored on the roof than can be used within five days. When prolonged inclement weather threatens, i.e., rainy seasons, no more roofing materials should be supplied to the rooftop than can be used within two days.

D. Store materials in dry, protected areas on pallets clear of the ground and moisture. Protect materials from freezing.

E. Materials shall be stored above 55°F (12.6°C) a minimum of 24 hours prior to application.

1.010 WEATHER RESTRICTIONS

A. Do not install membrane or roofing system during periods of low ambient temperatures below 30°F (-1.1°c).

B. Material installation during periods of high ambient temperatures greater than 90°F (32°c) requires special consideration to prevent condensation on the membrane surface and work with excessively fast adhesive drying times.

C. Do not install when moisture is present on the deck or the substrate to which applying.

2.0 PRODUCTS

2.01 MANUFACTURERS – SINGLE PLY MEMBRANE

A. Preapproved TPO System Manufacturers. The following manufacturers and products have been approved for use on this project subject to compliance with all other specification requirements as set forth in this document:

1. Sure-Weld® .072” by Carlisle SynTec Incorporated, Carlisle, PA or equal.

2.02 SINGLE PLY MATERIALS

A. Thermoplastic Single Ply Roofing Membrane – A smooth type, polyester scrim-reinforced thermoplastic polyolefin based membrane for use as a single ply roofing membrane: minimum 0.072 inches (72 mils) thickness.

B. Roll Dimensions: Roll dimensions will vary with manufacturer. Full width field sheets shall be no less than 72 inches by 100 ft in length. Perimeter sheets shall be one half the width of the field sheet.

C. TPO Membrane Physical Properties – A smooth type, polyester scrim-reinforced thermoplastic polyolefin based membrane for use as a single ply roofing membrane; must comply with ASTM D 6878; (note: the following values are from the Carlisle Sure-Weld product literature, which is considered “typical” for the purposes of this specification):

- Thickness — 0.072” (72 mils) nominal
- Minimum thickness above scrim — 0.034” (20 mils)
- Weight — 8.15 oz./sq. ft.
- Breaking Strength — 400 lbf (1 800 N) typical
- Seam Strength — >95% (membrane failure)
- Elongation at Break of Fabric — 25%

• Heat Aging	>95% (no significant change)
• Tear Strength,typical	130 lbf (578 N)
• Puncture Resistance	400 lbf (1800 N)
• Cold Brittleness	-58°F
• Permeance	0.010 Perms
• Dimensional Change	0.3%
• Water Absorption	1.5%
• Hydrostatic Resistance	510 psi (3 520 kPa)
• Ozone Resistance	No visible deterioration @ 7 x magnification
• Accelerated Weathering	No visible deterioration @ 7 x magnification

2.03 ADHESIVES AND PRIMERS; the following materials are needed to install this type of roofing system; each product shall be confirmed to be compatible with the specified membrane material:

A. Solvent-based Bonding Adhesive: Solvent based rubberized adhesive for use with TPO-based membranes.

B. Water-based Bonding Adhesive: Water based rubberized adhesive for use with TPO based membranes. *Note: unless very cold or very hot application conditions make it's use difficult, it is strongly urged that the contractor use the water-based adhesive.*

2.04 MANUFACTURER'S – INSULATION; all roof insulation products shall comply with ASTM C-1289 Type II; high density polyisocyanurate board:

A. Carlisle HPH® High Density, by Carlisle SynTec Inc., Carlisle, PA

2.05 INSULATION PHYSICAL PROPERTIES

A. ASTM C-1289 Type II, High Density Extruded Polyisocyanurate board (XPS), with a strong white or black fibrous glass facer, with the following characteristics:

1. Board Density: 2.0 lbs. per cubic foot. nominal

2. Board Thickness: 6 inches (necessary layers to meet a minimum of R-30).

B. Tapered Roof Insulation and Cricketing

1. All tapered roof insulation and cricketing as shown on the plans shall meet ASTM C-1289, Type II, High Density Polyisocyanurate.

2. Tapered roofing and cricketing shall have a minimum slope of 1/4" in 12" or approximately 50% greater than the field of the roof.

2.06 WOOD NAILERS

A. Wood Material:

1. Solid Blocking: Pressure treated wood, #2 Grade or better, nominal 2" x 4" minimum.

2. Shim Material: Pressure treated plywood, ½" x width to match solid blocking.

2.07 MEMBRANE FLASHING MATERIALS; the following materials shall be utilized for membrane flashing and detailing:

A. A smooth type, polyester scrim-reinforced thermoplastic polyolefin based membrane for use as a single ply roofing membrane and flashing material: 0.072 inches (72 mils) nominal thickness; same as the primary membrane material; .072" thickness.

B. A smooth type, unreinforced thermoplastic polyolefin based membrane for use as an alternative flashing/reinforcing material for penetrations and corners. 0.080 inches (80 mils) nominal thickness.

C. An 8 inch (20 cm) wide smooth type, polyester scrim-reinforced thermoplastic polyolefin based membrane strip for use as a cover strip over coated metal and stripping-in coated metal flanges and general repairs.

2.08 ROOF SURFACING

A. TPO Roof Membrane color:

1. White

2.09 RELATED MATERIALS

A. Mechanical Fasteners

1. Use Insulation Fasteners and Plates that are specified by the respective roofing system manufacturers in order to meet or exceed the performance criteria set forth in this specification, particularly as to FM 4470 corrosion resistance, wind uplift pull-out strength, and warranty. All fasteners shall penetrate the steel decking a minimum of ¾". Attachment patterns will vary with the manufacturer, but must comply with UL and FM performance criteria as well as the specific warranty requirements of each manufacturer. *The contractor will be required to make detailed submittals of all pertinent fastener data in order to confirm specification compliance.*

2. Use heavy duty or extra heavy duty membrane screws and plates as required by the respective manufacturers to meet the specification requirements, FM requirements and warranty requirements. To the degree that these specification standards may overlap or be in any way ambiguous, *the contractor is instructed to use the more rigorous standard that may apply.* All fasteners shall penetrate the steel decking a minimum of ¾". Fastener spacing shall be in compliance with UL and FM performance criteria as well as the requirements of the manufacturer for warranty.

3. Threaded Cap Nail - Annular-threaded electro-galvanized with yellow di-chromate coating, with 1" (25 mm) round or square cap, as manufactured by the Simplex Nail Corporation shall be used in any blind wood nailing requirements.

B. TPO Preformed Vent Boots: One standard size accommodates most common pipe and conduits, (1" to 6" diameter pipes), including square tube, made of 0.075" thick molded TPO membrane. Boots shall be heat welded directly to roofing membrane and must be supplied with stainless steel clamping rings. Boots must be supplied by the roofing system manufacturer and be clearly marked as such to assure compatability.

C. TPO Preformed Corners: Universal style accommodates both inside and outside corners of base and curb flashing, made of 0.065" thick molded TPO membrane and must be heat welded directly to roofing

membrane. Size 4” x 4” with 4” flange. Preformed corners must be supplied by the roofing system manufacturer and be clearly marked as such to assure compatability.

D. TPO Prefabricated Expansion Joint Covers: Roof expansion joint covers, if called for on the plans, shall be factory fabricated and specifically designated for 20 year warrantable roofing systems.

E. TPO Cut Edge Sealant: The use of cut edge sealant is required along all field cut edges of the TPO roofing assembly, unless otherwise stipulated in writing by the system manufacturer.

F. Polyurethane Sealant/Caulking: A one-part polyurethane sealant shall be used for sealing the upper lip of exposed termination bars, sheet metal counter flashing ledges and around the upper edge of penetration clamping rings. The sealant shall meet or exceed ASTM C-920-87, Type S, Grade NS, Class 25.

G. Water Block Mastic: A one part butyl based high viscosity sealant shall be used for sealing between flashing membrane and substrate surface behind exposed termination bars and for sealing between roofing membrane and the drain flange.

H. 2-Part Pourable Sealant: A 100% solids two-part sealant suitable for filling sealant pans at irregularly-shaped penetrations shall be supplied by the roofing system supplier.

I. TPO Coated Metal shall be provided and used in certain roof termination details as required by the roofing systems manufacturer for the 20 Tear Warranty. The TPO coated metal is supplied in sheets and required for fabrication into metal gravel stop and drip edge profiles, metal base and curb flashings, sealant pans, and scupper sleeves. Sheet size is typically 4’ x 10’.

J. Lip Termination Bar: Extruded aluminum termination bar with angled lip caulk receiver and lower leg bulb stiffener. Pre-punched slotted holes at 6” on center or 8” on center. ¾” x 10’ with 0.090” cross section.

K. TPO Walkway Pads: 1/8” thick extruded and embossed TPO pads 30” x 36” shall be used at all areas of the roof as indicated on the plans. The pads shall be able to be heat welded directly to roofing membrane. A traction surface, in either safety yellow or another contrasting color shall be employed.

L. Alternate: TPO Walkway Rolls: 1/8” thick extruded and embossed TPO roll 30” x 50’ shall be used at all areas of the roof as indicated on the plans. The roll material shall be able to be heat welded directly to roofing membrane. A traction surface, in either safety yellow or another contrasting color shall be employed.

3.0 EXECUTION

3.01 EXAMINATION

A. Verify that the surfaces and site conditions are ready to receive work.

B. Verify that the deck is supported and secured.

C. Verify that the deck is cleaned and smooth, free of depressions, waves, or projections, and properly sloped to drains, valleys, eaves, scuppers or gutters.

D. Verify that the deck surfaces are dry and free of ice or snow.

E. Verify that all roof openings, curbs, pipes, sleeves, ducts, vents or other penetrations through the roof are solidly set, and that all flashings, tapered edges and cant strips, reglets, and wood nailers are secure and tight to the building as per this specification.

F. The beginning of installation of the roof system signifies that the contractor has accepted the existing conditions as being in compliance with the requirements of this specification.

3.02 PROTECTION

A. Protect any adjacent building surfaces against damage from the installation of the roofing system.

B. The contractor shall observe all safety precautions as recommended by OSHA, Single Ply Roofing Industry (SPRI) and the National Roofing Contractors Association (NRCA).

C. All debris from the roofing operations shall be removed daily from the roof deck and jobsite and disposed of at an approved, suitable disposal site.

3.03 PREPARATION OF THE DECK

A. Metal Deck

1. Metal decks must be a minimum thickness of 22 gauge (.8 mm) as specified by the current Steel Deck Institute Design Manual, and comply with the gauge and span requirements as set forth by deck manufacturer and all other standards in the current Factory Mutual Approved Guide. Refer to Factory Mutual Loss Prevention Data Sheet 1-28 for minimum thickness requirements for various types of roof insulation.

2. After the roof deck has been installed, as per construction specifications, it is required that a rigid board insulation or substrate board be installed to the metal decking using mechanical fasteners before single ply membrane application.

3. Wood nailers of equivalent thickness to the roof insulation must be provided at perimeters and projection openings to act as an insulation stop and to provide nail holding capability for the nailing flanges of metal flashing.

4. Insulation boards thick enough to span the flutes of the steel deck as recommended by the insulation manufacturer are required and must be secured to the steel deck with approved mechanical fasteners to meet an FMRC 1-90 uplift resistance rating.

5. Insulation should be installed over steel decks with long sides continuous, either parallel or at right angles to steel deck ribs. The board edges that are parallel with the steel deck ribs must rest firmly on the bearing surface of the steel deck. The joints of parallel courses of insulation should be staggered.

3.04 SURFACE PREPARATION

A. New Construction

1. Installation of conduits or piping between the deck and the membrane is not acceptable. All openings in the deck or projections through the deck shall be completed before starting the application of the roof system.

2. The surface to receive roof systems shall be smooth, dry, clean, and free of sharp projections and depressions.

3. The roof deck must provide positive drainage. Outlets must be placed and installed to remove water promptly and completely from the roof.

4. Expansion joints, roof vents, roof drains, etc. must be installed using acceptable industry standards.

3.05 SUBSTRATE BOARD and INSULATION APPLICATION

A. General:

1. Do not apply roof insulation and roofing until all other work trades have completed jobs that require them to traverse the deck on foot or with equipment.

2. Do not install wet damaged or warped insulation boards.

3. Install substrate and insulation boards with staggered board joints in one direction (unless taping joint).

4. Install substrate and insulation board snug. Gap between board joints must not exceed ¼" (6 mm). All gaps in excess of ¼" (6 mm) must be filled with like material.

5. Do not kick insulation boards into place.

6. Install insulation boards per insulation board manufacturer's requirements.

7. Edges of insulation board shall be mitered and filled at ridges and elsewhere to prevent open joints or irregular surfaces. Avoid breaking or crushing of the insulation at the corners.

B. ISO Roof Insulation – High Density

1. The roof deck shall be smooth, dry, clean, and free of sharp projections and depressions. All wood nailers shall be the same thickness as the sum of the substrate board and insulation layers.

2. Do not install wet, damaged or warped insulation boards.

3. Set the insulation with long joints continuous. The short joints shall be staggered (over wood boards the long edge of insulation board shall be placed at right angles to the wood boards). Insulation shall be installed with coated side up.

4. Insulation thickness shall be uniform over common roof areas.

5. Insulation shall be cut to transition to tapered edge strips to provide a sump area a minimum of 36" x 36" at all drains.

6. Boards shall be tightly butted against each other but shall not be kicked into position. Boards shall be cut to fit neatly against adjoining surfaces.

7. Insulation shall not be applied under damp or wet conditions with excessive wind conditions, or unless the ambient temperature is at least 45 °F (7.1°C) and rising.

8. Insulation must not be left exposed to the weather. No more insulation shall be applied than can be completely covered with the finished roof per day.

9. Use appropriate type and length of approved fastener for 22 ga steel decking and secure in accordance with the manufacturer's fastening requirements or Factory Mutual wind classification requirements if applicable.

10. A minimum FMRC 1-90 attachment is required. Refer to FMRC Approval Guide for FM Fastening patterns. Factory Mutual requires fastener density increase in perimeter and corner areas for FM 1-90 or greater. Refer to FM Loss Prevention Data Sheets 1-7, 1-28, 1-29 and 1-49.

C. Tapered ISO Roof Insulation – High Density

1. The roof deck shall be smooth, dry, clean, and free of sharp projections and depressions. All wood nailers shall be the same thickness as the insulation.

2. Verify that all drawings and details are measured correctly. Any and all deviations shall be reported to the insulation manufacturer's Taper Dept. before shipment.

3. Verify from the detailed board layout pattern that is provided by the manufacturer that all piece quantities have been delivered to the jobsite and that the insulation is not damaged.

4. Do not install wet, damaged or warped insulation boards.

5. Set the insulation with long joints continuous. The short joints shall be staggered (over wood boards the long edge of insulation board shall be placed at right angles to the wood boards). Insulation shall be installed with coated side up.

6. Verify that the taper system will meet the drain pieces.

7. Start at the drain (low point) and work to the high point. When installing the boards, verify that the boards are laid out according to the letters on each board and per the shop drawings.

8. Boards shall be tightly butted against each other but shall not be kicked into position. Boards shall be cut to fit neatly against adjoining surfaces.

9. Insulation shall not be applied under damp or wet conditions with excessive wind conditions, or unless the ambient temperature is at least 45 °F (7.1°C) and rising.

10. Verify all valleys and hips are on a 45 degree angle. Valleys (hips) are made up of (2) valley (hip) pieces.

11. All crickets shall be field cut.

12. Apply only as much of the taper system that may be completely covered with the roofing system per day.

13. Use appropriate type and length of approved fastener for 22 ga steel decking and secure in accordance with the manufacturer's fastening requirements or Factory Mutual wind classification requirements if applicable.

14. A minimum FMRC 1-90 attachment is required. Refer to FMRC Approval Guide for FM Fastening patterns. Factory Mutual requires fastener density increase in perimeter and corner areas for FM 1-60 and FM 1-90 or greater. Refer to FM Loss Prevention Data Sheets 1-7, 1-28, 1-29 and 1-49.

3.06 WOOD NAILERS

A. Wood nailers must be 3-1/2" (8.9 cm) minimum width, 1" (25 mm) wider than the metal flange and a minimum of 1" (25 mm) thick. Nailers must be securely fastened to the structural steel deck in a manner consistent with FM 1-90.

B. Wood nailers must be pressure treated and have water based preservatives.

C. Wood nailers are required at all eaves, gable ends, penetrations or wherever metal flanges must be incorporated into the roof system.

D. Nailers must be mechanically fastened to the deck.

E. Wood nailers shall be the same thickness as the sum of the substrate board and insulation layers.

3.07 TPO ROOF MEMBRANE APPLICATION

A. TPO .072" Single Ply Roof Membrane

1. Mechcanical Attachment:
   a. Place membrane so that wrinkles and buckles are not formed. Any wrinkles or buckles must be removed from the sheet prior to permanent attachment. Roof membrane shall be mechanically attached immediately after it is rolled out, followed by welding to adjacent sheets.
   b. Overlap roof membrane a minimum of 5 ½" (27.5 cm) for side laps and 3" (15 cm) for end laps.
   c. Install membrane so that the side laps run across the roof slope lapped towards drainage points.
   d. All exposed sheet corners shall be rounded a minimum of 1".
   e. Use full width rolls in the field and half width rolls in the perimeter and corner region of roof. Mechanically fasten the rolls in the side lap areas to the roof deck, attachment spacing shall be 6" oc or that spacing required for UL, FM and Warranty compliance.
   f. Membrane laps shall be heat-welded together. All welds shall be continuous, without voids or partial welds. Welds shall be free of burns and scorch marks.
   g. Weld width shall be a minimum of 1-1/2" in width for automatic machine welding. Weld width shall be a minimum 2" in width for hand welding.
   h. All cut edges of reinforced membrane must be sealed with TPO Cut Edge Sealant.
   i. The metal plates must be placed within ¼" to ½" of the membrane edge. Plates shall not be placed closer than ¼" to the membrane edge.
   j. In the corner regions, additional fasteners shall be installed through the perimeter membrane to form a grid pattern. Carefully follow the required attachment pattern for each roofing system supplier to ensure full compliance with UL, FM and Warranty details.
   k. Fasteners must be installed to achieve the proper embedment depth of ¾". Install fasteners vertical to the deck, or perpendicular to the wall or curb, without lean or tilt.

l. Install fasteners so that the plate or termination bar is drawn down tightly to the membrane surface. Properly installed fasteners will not allow the plate or termination bar to move (underdriving), but will not cause wrinkling of the membrane (overdriving).
m. Membrane attachment to the roof deck is required at locations of deck angle changes in excess of five (5) angle degrees (1" in 12").
n. Supplemental membrane attachment is required at the base of all walls and curbs, and at locations of deck angle changes in excess of five (5) angle degrees (1"in 12"). Roofing membrane can be secured to the structural deck with screws and plates of the type and spacing used for in-lap attachment. The screws and plates must be installed no closer than ½" to the membrane edge. Alternatively, roofing membrane must be turned up vertically 3" minimum and secured on the vertical surface to the walls and curbs with screws and termination bar at the fastener spacing used for in-lap attachment. The termination bar must be installed within 1 ½" to 2" of the plane of the roof membrane, with a minimum of 1" of membrane extending above the termination bar.

3.08 FLASHING

A. General:

1. All penetrations should be at least 2 feet (61 cm) from the curbs, walls, and edges to provide adequate space for proper flashing.

2. Flash all perimeter, curb, and penetration conditions with coated metal, membrane flashing, and flashing accessories as appropriate to the site condition.

3. All coated metal and membrane flashing corners shall be reinforced with preformed corners or non-reinforced membrane.

4. Heat-weld all flashing membranes, accessories, and coated metal together to achieve a minimum 2" wide (hand welder) weld.

5. All cut edges of reinforced membrane must be sealed with TPO Cut Edge Sealant.

B. Coated Metal Flashings:

1. Coated metal flashings shall be formed in accordance with construction details and SMACNA guidelines.

2. Coated metal sections used for roof edging, base flashing and coping shall be butted together with a ¼" gap to allow for expansion and contraction. Heat weld a 6" wide reinforced membrane flashing strip to both sides of the joint, with approximately 1" on either side of the joint left unwelded to allow for expansion and contraction. 2" wide aluminum tape can be installed over the joint as a bond-breaker, to prevent welding in this area.

3. Coated metal used for sealant pans and scupper inserts, and corners of roof edging, base flashing and coping shall be overlapped or provided with separate metal pieces to create a continuous flange condition, and pop-riveted securely. Heat weld a 6" wide reinforced membrane flashing strip over all seams that will not be sealed during subsequent flashing installation.

4. Provide a ½" hem for all exposed metal edges to provide corrosion protection and edge reinforcement for improved durability.

5. Provide a ½" hem for all metal flange edges whenever possible to prevent wearing of the roofing and flashing membranes at the flange edge.

6. Coated metal flashing are nailed to treated wood nailers or otherwise mechanically attached to the roof deck, or to the wall or curb substrates, in accordance with construction detail requirements.

C. Reinforced Membrane Flashings:

1. The thickness of the flashing membrane shall be the same as the thickness of the roofing membrane.

2. Membrane flashing may either be installed dry, or fully adhered to the substrate surface in accordance with "Construction Detail Requirements".

3. Apply bonding adhesive to both the substrate surface and the underside of the flashing membrane, at the rate of 120 square feet/gallon per surface for solvent-based bonding adhesives, and at the rate of 200 square feet/gallon per surface for water-borne bonding adhesive. The bonding adhesive must be allowed to dry until tacky to the touch before flashing membrane application.

4. Apply the adhesive only when outside temperature is above 40°F. Recommended minimum application temperature is 50°F to allow easier adhesive application.

5. The membrane flashing shall be carefully positioned prior to application to avoid wrinkles and buckles.

D. Unreinforced Membrane Flashings:

1. Unreinforced membrane is used as a field-fabricated penetration/reinforcement flashing only where preformed corners and pipe boots cannot be properly installed.

2. Penetration flashings constructed of unreinforced membrane is typically installed in two sections, a vertical piece that extends up the penetration, and a horizontal piece that extends onto the roofing membrane. The two pieces are overlapped and heat-welded together.

3. The unreinforced membrane flashing shall be adhered to the penetration surface. Apply bonding adhesive to both the penetration surface and the underside of the flashing membrane, at the rate of 120 square feet/gallon per surface for solvent-based bonding adhesives, and at the rate of 200 square feet/gallon per surface for water-borne bonding adhesive. The bonding adhesive must be allowed to dry until tacky to the touch before flashing membrane application.

E. Roof Edging:

1. Roof edge flashing is applicable for both gravel stop/drip edge conditions as well as exterior edges of parapet walls.

2. Flash roof edges with coated metal flanged edging nailed 4" on center to pressure-treated wood nailers, and heat weld roof membrane to metal flanges.

3. Coated metal roof edging must be provided with a continuous hook strip to secure the lower fascia edge if the fascia width is 4” or greater. The continuous hook strip must be secured to the building a minimum of 12” on center.

4. Alternatively, flash roof edges with a 2-piece snap on fascia system, adhering roof membrane to metal cant with bonding adhesive and face nailing the membrane 8” on center prior to installing the snap-on fascia.

5. Flash roof edge scuppers with a scupper insert of coated metal that is mechanically attached to the roof edge and integrated as part of the metal edging.

F. Parapet and Building Walls:

1. Flash walls with membrane flashing adhered to the wall substrate with bonding adhesive, or with coated metal flashing nailed 4” on center to pressure-treated wood nailers.

2. Secure membrane flashing at the top edge with a termination bar. Water cut-off mastic shall be applied between the wall surface and membrane flashing underneath all exposed termination bars. Exposed termination bars shall be mechanically fastened 8” on center; termination bars that are counter flashed shall be fastened 12” on center.

3. Roof membrane must be mechanically attached along the base of walls that are flashed with membrane flashing with screws and plates (deck securement) or screws and inverted termination bar (wall securement) at the following rate (note if manufacturer attachment requirements for warranty are more rigorous than the following table, the manufacturer’s details shall prevail):

Mechanically Attached Systems	Per in-lap on center spacing, with a 12” maximum
Fully Adhered Systems	12” on center
Ballast Applied Systems	8” on center

4. All coated metal wall flashings and dry applied membrane flashings must be provided with separate metal counterflashings, or metal copings.

5. Two piece prefinished metal counterflashings must be used on all walls that will not be completely covered by membrane. Any exposed termination bars or counterflashings must be sealed with the specified polyurethane caulking.

6. Flash wall scuppers with a scupper insert of coated metal that is mechanically attached to the wall and integrated as part of the wall flashing.

G. Curbs and Ducts:

1. Flash curbs and ducts with membrane flashing adhered to the curb substrate with bonding adhesive, or with coated metal flashing nailed 4” on center to pressure-treated wood nailers.

2. Secure membrane flashing at the top edge with a termination bar. Water cut-off mastic shall be applied between the curb/duct surface and membrane flashing underneath all exposed termination bars. Exposed termination bars shall be mechanically fastened 8” on center; termination bars that are counter flashed shall be fastened 12” on center.

3. Roof membrane must be mechanically attached along the base of curbs and ducts that are flashed with membrane flashing with screws and plates (deck securement) or screws and inverted termination bar (wall securement) at the following rate:

Mechanically Attached Systems	Per in-lap on center spacing, with a 12” maximum
Fully Adhered Systems	12” on center
Ballast Applied Systems	8” on center

4. All coated metal curb flashings and dry applied membrane flashings must be provided with separate metal counterflashings, or metal copings.

H. Roof Drains:

1. Roof drains must be fitted with compression clamping rings and strainer baskets. Cast Iron drains shall be used.

2. Roof drains must be provided with a minimum 36” x 36” sumped area. Slope of tapered insulation within the sumped area shall not exceed 4” in 12”.

3. Extend the roofing membrane over the drain opening. Locate the drain and cut a hole in the roofing membrane directly over the drain opening. Provide a ½” of membrane flap extending past the drain flange into the drain opening. Punch holes through the roofing membrane at drain bolt locations.

4. For cast iron drains, the roofing membrane must be set in a full bed of water cut-off mastic on the drain flange prior to securement with the compression clamping ring. Typical mastic application is one 10.5 ounce cartridge per drain.

5. Lap seams shall not be located within the sump area. Where lap seams will be located within the sump area, a separate roof membrane drain flashing a minimum of 12” larger than the sump area must be installed. The roof membrane shall be mechanically attached 12” on center around the drain with screws and plates. The separate roof drain flashing shall be heat welded to the roof membrane beyond the screws and plates, extended over the drain flange, and secured as above.

6. Tighten the drain compression ring in place.

3.09 ACCESSORIES AND RELATED MATERIALS

A. INSULATION AND MEMBRANE SCREWS:

1. Use any model screw gun up to 2,500 RPM with depth gauge.

2. Stand-up and Short tool are acceptable for use in installing drill-point/pinpoint type screws.

3. Set the depth gauge on the tool to ensure that the screws are not over or under drilled.

4. The following gauges of steel decking are acceptable for use with drill-point/pinpoint screws: 18, 20, 22, and 24 gauges.

5. Screws must be installed to achieve the proper embedment depth. Install fasteners vertical to the deck, without lean or tilt.

6. Refer to manufacturer's Deck Type/Fastener Selection table for minimum deck penetration and minimum pull out force per fastener. Contact the Manufacturer's Technical Services if the required amount is not achieved when conducting fastener pull-out tests.

7. Good roofing practice requires dry storage of all fasteners before use.

8. Use appropriate fastener plate designed for the fastener, deck and if applicable, the windstorm classification.

9. Refer to Insulation Attachment Table for minimum required fastener density of insulation attachment.

10. Refer to Membrane Attachment Table for minimum required fastener spacing for membrane attachment.

11. CAUTION: Electric or any other conduits should be located in decks, and/or walls before any drilling is performed.

12. Insert the square socket driver into the head of the fastener and insert the fastener into the roof system keeping the screw gun and square socket driver as vertical as possible. If the fastener resists insertion or damage occurs to the roof deck, then a pilot hole may be necessary. The fastener should be installed seating snugly against the roof system. CARE SHOULD BE TAKEN TO ENSURE THAT OVER DRIVING DOES NOT OCCUR! OVER DRIVING MAY CAUSE STRIPPING AND LOSS OF HOLDING POWER!

13. To determine the need for a pilot hole is done by simply installing a fastener, both with and without a pilot hole. If the fastener can be installed without damage to the fastener or roof deck without a pilot hole, then the work may proceed without the need for a pilot hole.

14. To determine the proper size of the pilot hole, start by using a 11/32" drill bit to make the pilot hole. If this size still causes difficulty in installation then try using a 3/8" (10 mm) drill bit. If this size is still inadequate then use a 13/32" drill bit. As a last resort, use a 7/16" drill bit. UNDER NO CIRCUMSTANCES SHALL A PILOT HOLE LARGER THAN 7/16" IN DIAMETER BE USED.

B. Threaded Cap Nail

C. TPO Preformed Boots

1. Flash penetrations with preformed vent boots provided that the penetrations are accessible from the top. Otherwise, field fabricate flashing with two-piece field fabricated flashings of unreinforced membrane.

2. All flashings require the installation of a stainless steel draw band around the top of the flashing. Seal the top edge of the draw band with caulking.

3. Roof membrane must be mechanically attached at the base of each penetration with screws and plates a minimum of 12" on center, with a minimum of three fasteners per penetration.

4. Flashing membrane shall be heat-welded, without voids or partial welds to the roof membrane. Welds shall be free of burns and scorch marks.

5. Welds shall be a minimum of 2” in width using a hand welder.

D. Sealant Pans

1. Flash irregularly shaped penetrations with flanged sealant pans formed of coated metal, secured to the deck, through the membrane with screws 6” on center, a minimum of two per side.

2. Strip in metal flanges with 8” wide membrane flashing strips heat welded to both the roof membrane and the metal flanges.

3. Fill sealant pans with 2-part pourable sealant. Alternatively, fill sealant pans with non-shrink quick-set grout, and top off sealant pans with a 2” minimum thickness of 2-part pourable sealant.

4. Flashing membrane shall be heat-welded, without voids or partial welds to the roof membrane. Welds shall be free of burns and scorch marks.

5. Welds shall be a minimum of 2” in width using a hand welder.

E. TPO Expansion Joints (where applicable)

1. Install prefabricated expansion joint covers at all flat type and raised cant/curb type expansion joint conditions where indicated on the plans. All metal nailing strips must either be nailed to pressure-treated wood nailers, cants, curbs, or secured to walls with screws or expansion anchors appropriate to substrate type. Weld membrane flaps to roofing/flashing membrane following curb flashing instructions.

2. Roof membrane must be mechanically attached along the base of raised cant/curb expansion joints with screws and plates a minimum of 12” on center.

3. Expansion joint bellows must be twice the width of the expansion joint opening to allow for proper expansion/contraction.

3.010 SURFACING

A. Roof Membrane

1. Smooth White

3.011 CLEANING

A. Remove bonding adhesive, bituminous markings and other contaminants from finished surfaces.

B. In areas where finished surfaces are soiled by asphalt or any other source of soiling caused by work of this or other sections, consult manufacturer of surfaces for cleaning advice and conform to those instructions.

C. Repair or replace defaced or disfigured finishes caused by work of this section.

END OF SECTION

SECTION 07620
SHEET METAL FLASHING AND TRIM

PART 1 GENERAL

1.01 SECTION INCLUDES

A. Flashings and trim at tower platform
B. Counterflashings for hatch at tower platform.
C. Counterflashings at equipment at tower platform.

1.02 RELATED SECTIONS

A. Section 07900 - Joint Sealers.
D. Section 15000: Roof curbs for mechanical equipment.
E. Section 15000: Flashing sleeves and collars for mechanical items protruding through roofing membrane.
F. Section 16200: Roof curbs for electrical equipment.
G. Section 16200: Flashing sleeves and collars for electrical items protruding through roofing membrane.

1.03 REFERENCES

A. AISI (American Iron and Steel Institute) - Stainless Steel - Uses in Architecture.
B. ASTM A167 - Stainless and Heat-Resisting Chromium-Nickel Steel Plate.
C. ASTM A525 - Steel Sheet, Zinc Coated, (Galvanized) by the Hot-Dip Process.
D. ASTM B32 - Solder Metal.
E. ASTM B209 - Aluminum and Alloy Sheet and Plate.
F. ASTM B370 - Copper Sheet and Strip for Building Construction.
G. ASTM B486 - Paste Solder.
H. ASTM D226 - Asphalt-Saturated Organic Felt Used in Roofing and Waterproofing.
I. ASTM D4586 - Asphalt Roof Cement, Asbestos-Free.
J. CDA (Copper Development Association) - Contemporary Copper, A Handbook of Sheet Copper Fundamentals, Design, Details and Specifications.
K. CDA - Copper Roofing - A Practical Handbook.
L. FS O-F-506 - Flux, Soldering, Paste and Liquid.
M. NRCA (National Roofing Contractors Association) - Roofing Manual.
N. SMACNA - Architectural Sheet Metal Manual.

1.04 SUBMITTALS

A. Submit under provisions of Section 01300.
B. Shop Drawings: Indicate material profile, jointing pattern, jointing details, fastening methods, flashings, terminations, and installation details.

1.05 QUALITY ASSURANCE

A. Perform work in accordance with NRCA standard details and requirements.
B. Maintain one copy of the document on site.

1.06 QUALIFICATIONS

A. Fabricator and Installer: Company specializing in sheet metal flashing work with five years documented experience.

1.07 PRE-INSTALLATION CONFERENCE

A. Convene one week prior to commencing work of this section, under provisions of Section 01039.

1.08 DELIVERY, STORAGE, AND HANDLING

A. Deliver, store, protect and handle products to site under provisions of Section 01600.
B. Stack preformed material to prevent twisting, bending, or abrasion, and to provide ventilation. Slope metal sheets to ensure drainage.
C. Prevent contact with materials which may cause discoloration or staining.

1.09 COORDINATION

A. Coordinate work under provisions of Section 01039.
B. Coordinate with the work of Section 04200 Unit Masonry for installing flashing reglets.

PART 2 PRODUCTS

2.01 SHEET MATERIALS

A. Galvanized Steel: ASTM A446, Grade A, G90 zinc coating; 20 gage core steel.
B. Lead: Hard type, weighing 4 lb/sf; fed spec N. QQ-L-201
C. Copper: fabric flashing, 30 - 40 mil.

2.02 ACCESSORIES

A. Fasteners: Same material and finish as flashing metal, with soft neoprene washers.
B. Underlayment: ASTM E 154, 10 mil polyethylene.
C. Protective Backing Paint: Zinc chromate alkyd.
D. Sealant: Polyurethane type, specified in Section 07900.
E. Bedding Compound: Butyl type.
F. Plastic Cement: ASTM D4586, Type I.
G. Reglets: Recessed rigid extruded PVC.

2.03 FABRICATION

A. Form sections true to shape, accurate in size, square, and free from distortion or defects.
B. Fabricate cleats of same material as sheet, interlockable with sheet.
C. Form pieces in longest possible lengths.
D. Hem exposed edges on underside 1/2 inch; miter and seam corners.
E. Pre form lead flashings for all pipe roof penetrations.
F. Form lead flashing "pan" for roof drain in min. 36"x 36"sheets.
G. Lead field formed flashings shall have a 4" perimeter flange, sleeve diameter clearance of 1/4", and minimum height of 6".
H. Form copper flashings as indicated on details.

2.04 FINISH

A. Prepare galvanized steel surfaces in accordance with Section 09900.

B. Back paint concealed metal surfaces with protective backing paint to a minimum dry film thickness of 15 mil.

PART 3 EXECUTION

3.01 EXAMINATION

A. Verify roof openings, curbs, pipes, sleeves, ducts, or vents through roof are solidly set, reglets in place, and nailing strips located.
B. Verify roofing termination and base flashings are in place, sealed, and secure.

3.02 PREPARATION

A. Install starter and edge strips, and cleats before starting installation.

3.03 INSTALLATION

A. Conform to drawing details in the NRCA manual.
B. Insert flashings into reglets to form tight fit. Secure in place with plastic wedges. Seal flashings into reglets with sealant.
C. Seal metal joints watertight.

3.04 FIELD QUALITY CONTROL

A. Field inspection will be performed under provisions of Section 01400.
B. Inspection will involve surveillance of work during installation to ascertain compliance with specified requirements.

3.05 SCHEDULE

A. Refer to drawings for extent of work for this section.

END OF SECTION

SECTION 07724
ROOF HATCHES

PART 1 GENERAL

1.01 SECTION INCLUDES

A. Prefabricated roof hatches with integral support curbs, operable hardware,counterflashings, and ladder.

1.02 RELATED SECTIONS

A. Section 07620 - Sheet Metal Flashing and Trim: Flashing to roof system.

1.03 SUBMITTALS

A. Submit under provisions of Section 01300.
B. Product Data: Provide data on unit construction, sizes, configuration, jointing methods and locations when applicable, and attachment method.
C. Manufacturer's Installation Instructions: Indicate special installation criteria, interface with adjacent components.

1.04 REFERENCES

A. Underwriters Laboratories (UL) - Fire Hazard Classifications.
B. Factory Mutual Engineering Corporation (FM): Roof Assembly Classifications.

PART 2 PRODUCTS

2.01 ROOF HATCH

A. Unit: 36 x 36 inch as shown on drawings, single leaf type, listed by FM and/or UL.
B. Integral Steel Curb: 14 gage prime painted with rigid glass fiber insulation; integral cap flashing to receive roof flashing; extended flange for mounting.
C. Hardware:
    1. Compression spring operator.
    2. Steel manual pull handle for interior and exterior operation.
    3. Steel hold open arm with vinyl covered grip handle for easy release.
    4. Components cadmium plated finish.
    5. Automatic opening upon break of 160 degree F fusible link.
    6. Padlock hasp.
D. Hinges: Manufacturer's recommended type Heavy duty pintle type.
E. Steel Ladder and Scuttle: As indicated on the drawings and/or required by code.

2.02 FABRICATION

A. Fabricate components free of visual distortion or defects. Weld corners and joints.
B. Provide for removal of condensation occurring within components or assembly.
C. Fit components for weathertight assembly.

PART 3 EXECUTION

3.01 INSTALLATION

A. Install in accordance with manufacturer's instructions.
B. Coordinate with installation of roofing system and related flashings for weathertight installation.
C. Apply bituminous paint on surfaces of units in contact with cementitious materials or dissimilar metals.

3.02 SCHEDULE

A. See drawings for location.

END OF SECTION

SECTION 07841

FIRESTOPPING

PART 1 GENERAL

1.1 SUMMARY

A. Section includes firestopping and through-penetration protection system materials and accessories; firestopping tops of fire rated walls; and smoke sealing at joints between floor slabs and walls.

B. Related Sections:
1. Division 15 - Mechanical: Mechanical work requiring firestopping.
2. Division 16 - Electrical: Electrical work requiring firestopping.

1.2 REFERENCES

A. ASTM International:
1. ASTM E84 - Standard Test Method for Surface Burning Characteristics of Building Materials.
2. ASTM E119 - Standard Test Methods for Fire Tests of Building Construction and Materials.
3. ASTM E814 - Standard Test Method for Fire Tests of Through-Penetration Fire Stops.
4. ASTM E1966 - Standard Test Method for Fire-Resistive Joint Systems.

B. Intertek Testing Services (Warnock Hersey Listed):
1. WH - Certification Listings.

C. National Fire Protection Association:
1. NFPA 255 - Standard Method of Test of Surface Burning Characteristics of Building Materials.

D. Underwriters Laboratories Inc.:
1. UL 263 - Fire Tests of Building Construction and Materials.
2. UL 723 - Tests for Surface Burning Characteristics of Building Materials.
3. UL 1479 - Fire Tests of Through-Penetration Firestops.
4. UL 2079 - Tests for Fire Resistance of Building Joint Systems.
5. UL - Fire Resistance Directory.

1.3 DEFINITIONS

A. Firestopping (Through-Penetration Protection System): Sealing or stuffing material or assembly placed in spaces between and penetrations through building materials to arrest movement of fire, smoke, heat, and hot gases through fire rated construction at separation wall between tenants.

B. Membrane Penetrations: Fire-Resistive walls and partitions may have openings for steel electrical outlet boxes not exceeding 16 square inches in area provided the aggregate area of such openings is more than 100 square inches for any 100 square feet of wall or

partition area. Outlet boxes on opposite sides of walls and partitions shall be separated by horizontal distance of at least 24 inches.

C. Where wall-protective membranes are penetrated by other materials or where openings are required other than permitted above, the penetrating item shall be:
   1. Protected with membranes-penetrating fire stops suitable for the methods of penetration or,
   2. Installed in accordance with the installation instructions of their listing for such use.

1.4 PERFORMANCE REQUIREMENTS

A. Conform to applicable code FM UL WH for fire resistance ratings and surface burning characteristics.

B. Provide certificate of compliance from authority having jurisdiction indicating approval of materials used.

C. Firestop all interruptions to fire rated assemblies, materials, and components.

1.5 SUBMITTALS

A. Section 010000 - General Requirements: Submittal procedures.

B. Product Data: Submit data on product characteristics, performance and limitation criteria.

C. Schedule: Submit schedule of opening locations and sizes, penetrating items, and required listed design numbers to seal openings to maintain fire resistance rating of adjacent assembly.

D. Manufacturer's Installation Instructions: Submit preparation and installation instructions.

E. Manufacturer's Certificate: Certify products meet or exceed specified requirements.

F. Engineering Judgments: For conditions not covered by UL or WH listed designs, submit judgments by licensed professional engineer suitable for presentation to authority having jurisdiction for acceptance as meeting code fire protection requirements.

1.6 QUALITY ASSURANCE

A. Through Penetration Firestopping of Fire Rated Assemblies: ASTM E814 with 0.10 inch water gage (24.9 Pa) minimum positive pressure differential to achieve fire F-Ratings and temperature T-Ratings as indicated on Drawings, but not less than 1-hour.
   1. Wall Penetrations: Fire F-Ratings as indicated on Drawings, but not less than 1-hour.
   2. Floor Penetrations: Fire F-Ratings and temperature T-Ratings as indicated on Drawings, but not less than 1-hour.
      a. Floor Penetrations Within Wall Cavities: T-Rating is not required.

B. Through Penetration Firestopping of Non-Fire Rated Floor Assemblies: Materials to resist free passage of flame and products of combustion.
   1. Noncombustible Penetrating Items: Noncombustible materials for penetrating items connecting maximum of three stories.

2. Penetrating Items: Materials approved by authorities having jurisdiction for penetrating items connecting maximum of two stories.

C. Fire Resistant Joints in Fire Rated Floor, Roof, and Wall Assemblies: UL 2079 to achieve fire resistant rating as indicated on Drawings for assembly in which joint is installed.

D. Fire Resistant Joints Between Floor Slabs and Exterior Walls: ASTM E119 with 0.10 inch water gage (24.9 Pa) minimum positive pressure differential to achieve fire resistant rating as indicated on Drawings for floor assembly.

E. Surface Burning Characteristics: Maximum 25/450 flame spread/smoke developed index when tested in accordance with ASTM E84, NFPA 255, UL 723.

1.7 QUALIFICATIONS

A. Manufacturer: Company specializing in manufacturing products specified in this section with minimum three years documented experience.

B. Applicator: Company specializing in performing Work of this section with minimum three years documented experience, and approved by manufacturer.

1.8 ENVIRONMENTAL REQUIREMENTS

A. Do not apply materials when temperature of substrate material and ambient air is below 60 degrees F (15 degrees C).

B. Maintain this minimum temperature before, during, and for minimum 3 days after installation of materials.

C. Provide ventilation in areas to receive solvent cured materials.

PART 2 PRODUCTS

2.1 FIRESTOPPING

A. Manufacturers:
1. SpecSeal Firestop Products.
2. United States Gypsum Company.
3. Cafco, Through Penetrating Systems.
4. Hitti, High performance Firestop Systems.

Note: Products listed below are based on SpecSeal Firestop Products, for other acceptable Manufacturers, see above.

2.2 SILICONE ELASTOMERIC COMPOUND

A. Manufacturers:

1. SpecSeal, Product, Pencil 200 Sealant.

B. Material: Single component silicone elastomeric compound and compatible silicone sealant; conforming to the following:

C. Recommended Uses:

1. Architectural joints; Small to Medium sized openings.

D. Applications:
1. Expansion Joints.
2. Curtain wall, window and storefronts joints.
3. Head of wall details.
4. Piping: Non-combustible steel and iron.
5. Jacketed cable.
6. Bus Duct: with wrap strip and cover plate.

2.3 FORM COMPOUND

A. Manufacturers:
1. SpecSeal, Product, Pencil 200 Foam.

B. Material: Two stage component foam compound to the following:

C. Recommended Uses:
1. Medium to large openings: Through concrete or masonry walls and floors.

D. Applications:
1. Piping: Non-combustible steel and Iron.
2. Jacketed cables.
3. Cable trays.
4. Blank Openings.

2.4 FIBER STUFFING

A. Manufacturers:
1. USG, Product: Thermafiber.

B. Material: Formulated compound mixed with incombustible non-asbestos fibers; conforming to the following:

C. Recommended Uses:
1. For stuffing penetrations to achieve certain dimension before applying fire rated compounds.

2.5 MECHANICAL DEVICE WITH FILLERS

A. Manufacturers:
1. SpecSeal, Product Collars.

B. Material: Mechanical device with incombustible fillers or silicone elastomeric covered with sheet stainless steel jacket, joined with collars, penetrations with flanged stops.

C. Recommended Uses:
1. Single openings in all common construction, multiple penetrations with SpecSeal Mortar.

2.6 INTUMESCENT PUTTY

A. Manufacturers:
1. SpecSeal, Product: Putty/Putty Pads.

B. Material: Intumescent putty compound which expands on exposure to surface heat gain.

C. Recommended Uses:

1. Small to medium sized openings through all common construction.

D. Applications:
1. Pipping: Non-combustible steel or iron.
2. Jacketed cables.
3. Electrical boxes (putty pad).
4. Vibration Buffers.

2.7 INTUMESCENT SEALANT

A. Manufacturers:
1. SpecSeal, Product Series 100 Sealant.

B. Material: Latex based intumescent sealant two stage compound which expands on exposure to surface heat gain.

C. Recommended Uses:
1. Small to medium sized openings through all common construction.

D. Applications:
1. Pipping: Non-combustible with wrap strip.
2. Pipping: with insulation with wrap strip.
3. Cable tray: steel and aluminum.
4. Bus Duct: Aluminum or Cooper.
5. Loose Cable: Any type compatible with sealant.
6. Complex Multiple Penetrants.

2.8 FIRESTOP PILLOWS

A. Manufacturers:
1. SpecSeal, Product Pillows.

B. Material: Formed mineral fiber pillows.

C. Recommended Uses:
1. Large to Medium sized opening through masonry walls and floors and gypsum board walls.

D. Applications:
1. Loose Cable.
2. Cable trays: Steel and aluminum.
3. Multiple cable trays piping: fan coil units.

2.9 OTHER APPLICATIONS

A. For material on any other applications not listed, consult with Manufacturer.

2.10 ACCESSORIES

A. Primer: Type recommended by firestopping manufacturer for specific substrate surfaces.

B. Dam Material: Permanent:
1. Mineral fiberboard.
2. Mineral fiber matting.
3. Sheet metal.
4. Plywood or particle board.
5. Alumina silicate fire board.

C. Installation Accessories: Clips, collars, fasteners, temporary stops or dams, and other devices required to positions and retain materials in place.

2.11 FINISHES

A. Color: Dark gray, Black.

PART 3 EXECUTION

3.1 EXAMINATION

A. Verify openings are ready to receive firestopping.

3.2 PREPARATION

A. Clean substrate surfaces of dirt, dust, grease, oil, loose material, or other matter affecting bond of firestopping material.

B. Remove incompatible materials affecting bond.

C. Install backing, damming materials to arrest liquid material leakage.

3.3 APPLICATION

A. Install material at fire rated construction perimeters and openings containing penetrating sleeves, piping, ductwork, conduit and other items, requiring firestopping.

B. Apply primer where recommended by manufacturer for type of firestopping material and substrate involved, and as required for compliance with required fire ratings.

C. Apply firestopping material in sufficient thickness to achieve required fire and smoke rating, to uniform density and texture].

D. Compress fibered material to maximum 40 percent of its uncompressed size.

E. Place foamed material in layers to ensure homogenous density, filling cavities and spaces. Place sealant to completely seal junctions with adjacent dissimilar materials.

F. Place intumescent coating in sufficient coats to achieve rating required.

G. Remove dam material after firestopping material has cured. Dam material to remain.

3.4 FIELD QUALITY CONTROL

A. Inspect installed firestopping for compliance with specifications and submitted schedule.

3.5 CLEANING

A. Section 01 00 00 – General Requirements: Final cleaning.

B. Clean adjacent surfaces of firestopping materials.

3.6 PROTECTION OF INSTALLED CONSTRUCTION

A. Section 01 00 00 - Execution Requirements: Protecting installed construction.

B. Protect adjacent surfaces from damage by material installation.

3.7 SCHEDULES

A. New electrical conduit penetration, see drawings.

END OF SECTION

SECTION 07900
JOINT SEALERS

PART 1 GENERAL

1.01 SECTION INCLUDES
- A. Preparing substrate surfaces.
- B. Sealant and joint backing.

1.02 RELATED SECTIONS
- A. Section 03310: Sealants required in conjunction with cast-in-place and precast concrete.
- B. Section 04200 Unit Masonry: Sealants required in conjunction with masonry.
- C. Section 08112 Standard Steel Frames: Sealants required in conjunction with door frames.
- D. Section 08800 - Glazing: Sealants required in conjunction with glazing methods.
- E. Section 09900 Painting: Sealants required in conjunction with wall finish.

1.03 REFERENCES
- A. ASTM C790 - Use of Latex Sealing Compounds.
- B. ASTM C834 - Latex Sealing Compounds.
- C. ASTM C920 - Elastomeric Joint Sealants.
- D. ASTM D1056 - Flexible Cellular Materials - Sponge or Expanded Rubber.
- E. SWRI (Sealant, Waterproofing and Restoration Institute) - Sealant and Caulking Guide Specification.

1.04 SUBMITTALS
- A. Submit under provisions of Section 01300.
- B. Product Data: Provide data indicating sealant chemical characteristics, performance criteria, substrate preparation, limitations, color and availability.
- C. Samples: Submit two samples, in size illustrating sealant colors for selection.
- D. Manufacturer's Installation Instructions: Indicate special procedures, surface preparation, perimeter conditions requiring special attention.

1.05 QUALITY ASSURANCE
- A. Perform work in accordance with sealant manufacturer's requirements for preparation of surfaces and material installation instructions.
- B. Provide mock up of each type of scheduled joint sealant. Joint sealer must pass “Pull Test” to be acceptable.

1.06 QUALIFICATIONS
- A. Manufacturer: Company specializing in manufacturing the Products specified in this section with minimum three years documented experience.
- B. Applicator: Company specializing in performing the work of this section with minimum five years documented experience approved by manufacturer.

1.07 ENVIRONMENTAL REQUIREMENTS

- A. Maintain temperature and humidity recommended by the sealant manufacturer during and after installation.

1.08 COORDINATION
- A. Coordinate work under provisions of Section 01039.
- B. Coordinate the work with all sections referencing this section.

1.09 WARRANTY

A. Provide five year warranty under provisions of Section 01700.
B. Warranty: Include coverage for installed sealants and accessories which fail to achieve air tight seal, water tight seal, and exhibit loss of adhesion or cohesion, or do not cure.

PART 2 PRODUCTS

2.01 SEALANTS

A. Acrylic Emulsion Latex (Type A): ASTM C834, single component, color as selected.
B. Bituminous Based (Type B): Single component, asphalt compound, elongation capability of 2 percent of joint width.
C. Butyl Sealant (Type C): ASTM C920; single component, solvent release, non-skinning, non-sagging or black color.
D. Dow Corning 795 Silicon- ASTM 920; Type MS non sag.
E. Dow Corning 795 Silicon - ASTM 920; Type M; Use T.
F. Elastomeric Wall Coating
H. Exterior Acrylic Emulsion: Fed. Spec. P - 19D, smooth or textured finish. Coverage, 1 gallon per 120 s.f.

2.02 ACCESSORIES

A. Primer: Non-staining type, recommended by sealant manufacturer to suit application.
B. Joint Cleaner: Non-corrosive and non-staining type, recommended by sealant manufacturer; compatible with joint forming materials.
C. Joint Backing: ASTM D1056; round, closed cell polyethylene foam rod; oversized 30 percent larger than joint width.
D. Bond Breaker: Pressure sensitive tape recommended by sealant manufacturer to suit application.

PART 3 EXECUTION

3.01 EXAMINATION

A. Verify that substrate surfaces and joint openings are ready to receive work.
B. Verify that joint backing and release tapes are compatible with sealant.

3.02 PREPARATION

A. Remove loose materials and foreign matter which might impair adhesion of sealant.
B. Clean and prime joints in accordance with manufacturer's instructions.
C. Perform preparation in accordance with manufacturer's instructions.
D. Protect elements surrounding the work of this section from damage or disfiguration.

3.03 INSTALLATION

A. Install sealant in accordance with manufacturer's instructions.
B. Measure joint dimensions and size materials to achieve 2:1 width/depth ratios.
C. Install joint backing to achieve a neck dimension no greater than 1/3 of the joint width.
D. Install bond breaker where joint backing is not used.
E. Install sealant free of air pockets, foreign embedded matter, ridges, and sags.
F. Apply sealant within recommended application temperature ranges. Consult manufacturer when sealant cannot be applied within these temperature ranges.
G. Tool joints concave.

3.04 CLEANING

A. Clean work under provisions of 01700.
B. Clean adjacent soiled surfaces.

3.05 PROTECTION OF FINISHED WORK

A. Protect finished installation under provisions of Section 01500.
B. Protect sealants until cured.

3.06 SCHEDULE

	Location	Type	Color
A.	Window perimeter	D	to be selected
B.	Exterior Door Frame/Walls	D	to be selected
C.	Door Frame/Walls Interior	A	to be selected
D.	Under Thresholds	C	black
F.	Paving Joints	E	to be selected

G. Exterior:
   1. Non-working Joints: Dow Corning 795 Silicon
   2. Working Joints: Dow Corning 795 Silicon

H. Interior:
   1. Non-working Joints: Dow Corning 795 Silicon
   2. Working Joints: Dow Corning 795 Silicon.

I. Special systems or other applications where sealants are required, use manufacturers recommended sealant materials or appropriate industry standard.

END OF SECTION

SECTION 08100

BUILDER'S HARDWARE

PART 1 - GENERAL

1.01 RELATED DOCUMENTS

Drawings and general provisions of the Contract, including General and Supplementary Conditions and Division 01 Specification Sections, apply to this Section.

1.02 SUMMARY

Section includes:

Mechanical door hardware for the following:

Swinging doors.
a. Sliding doors as scheduled.

Cylinders or padlocks for doors specified in other Sections.
2. Electrified door hardware.

Related Sections:

2. Section 08111 "Standard Steel Doors" .
3. Section 08112 " Standard Steel Frames" .
4. Section 08331 "Overhead Coiling Doors" for door hardware provided as part of overhead door assemblies.
5. Section 08410 "Aluminum-Framed Entrances and Storefronts" for installation of entrance door hardware, including cylinders.
6. Section 08229 "Sliding Automatic Entrances" for entrance door hardware, including cylinders.
7. Section 281300 "Access Control" for access control devices installed at door openings and provided as part of a security system.
8. Section 281600 "Intrusion Detection" for detection devices installed at door openings and provided as part of an intrusion-detection system.
9. Section 283111 "Digital, Addressable Fire-Alarm System" for connections to building fire-alarm system.

1.03 ACTION SUBMITTALS

Product Data: For each type of product indicated. Include construction and installation details, material descriptions, dimensions of individual components and profiles, and finishes.

A. Shop Drawings: Details of electrified door hardware, indicating the following:

Wiring Diagrams: For power, signal, and control wiring and including the following:

Details of interface of electrified door hardware and building safety and security systems.

a. Schematic diagram of systems that interface with electrified door hardware.
b. Point-to-point wiring.
c. Risers.
d. Elevations doors controlled by electrified door hardware.

Operation Narrative: Describe the operation of doors controlled by electrified door hardware.

Other Action Submittals:

Door Hardware Schedule: Prepared by or under the supervision of Architectural Hardware Consultant, detailing fabrication and assembly of door hardware, as well as installation procedures and diagrams. Coordinate final door hardware schedule with doors, frames, and related work to ensure proper size, thickness, hand, function, and finish of door hardware.

Submittal Sequence: Submit door hardware schedule concurrent with submissions of Product Data, Samples if requested, and Shop Drawings. Coordinate submission of door hardware schedule with scheduling requirements of other work to facilitate the fabrication of other work that is critical in Project construction schedule.

e. Format: Comply with scheduling sequence and vertical format in DHI's "Sequence and Format for the Hardware Schedule." Double space entries, and number and date each page.
f. Format: Use same scheduling sequence and format[and use same door numbers] as in the Contract Documents.
g. Content: Include the following information:

Identification number, location, hand, fire rating, size, and material of each door and frame.

1) Locations of each door hardware set, cross-referenced to Drawings on floor plans and to door and frame schedule.
2) Complete designations, including name and manufacturer, type, style, function, size, quantity, function, and finish of each door hardware product.
3) Description of electrified door hardware sequences of operation and interfaces with other building control systems.
4) Fastenings and other pertinent information.
5) Explanation of abbreviations, symbols, and codes contained in schedule.
6) Mounting locations for door hardware.
7) List of related door devices specified in other Sections for each door and frame.

Keying Schedule: Prepared by or under the supervision of Architectural Hardware Consultant, detailing Owner's final keying instructions for locks. Include schematic keying diagram and index each key set to unique door designations that are coordinated with the Contract Documents.

1.04 INFORMATIONAL SUBMITTALS

Qualification Data: For Architectural Hardware Consultant.

A. Product Certificates: For electrified door hardware, from the manufacturer.
Certify that door hardware approved for use on types and sizes of labeled fire-rated doors

complies with listed fire-rated door assemblies.

Product Test Reports: For compliance with accessibility requirements, based on evaluation of comprehensive tests performed by manufacturer and witnessed by a qualified testing agency, for door hardware on doors located in accessible routes.

B. Warranty: Special warranty specified in this Section.

1.05 CLOSEOUT SUBMITTALS

Maintenance Data: For each type of door hardware to include in maintenance manuals if published by manufacturer. Include final hardware and keying schedule.

1.06 MAINTENANCE MATERIAL SUBMITTALS

Furnish extra materials that match products installed and that are packaged with protective covering for storage and identified with labels describing contents.

Door Hardware: 2 Exit Devices, 5 Office Locksets.
1. Electrical Hardware: 2 Elec Exit Devices, 2 Electric Locksets, 2 Power Transfers.

1.07 QUALITY ASSURANCE

Architectural Hardware Consultant Qualifications: A person who is experienced in providing consulting services for door hardware installations that are comparable in material, design, and extent to that indicated for this Project and who is currently certified by DHI as follows:

For door hardware, an Architectural Hardware Consultant (AHC).
1. Warehousing Facilities: In Project's vicinity.
2. Scheduling Responsibility: Preparation of door hardware and keying schedules.

Source Limitations: Obtain each type of door hardware from a single manufacturer.

Provide electrified door hardware from same manufacturer as mechanical door hardware, unless otherwise indicated. Manufacturers that perform electrical modifications and that are listed by a testing and inspecting agency acceptable to authorities having jurisdiction are acceptable.

Fire-Rated Door Assemblies: Where fire-rated door assemblies are indicated, provide door hardware rated for use in assemblies complying with NFPA 80 that are listed and labeled by a qualified testing agency, for fire-protection ratings indicated, based on testing at positive pressure according to NFPA 252 or UL 10C, unless otherwise indicated.

B. Smoke- and Draft-Control Door Assemblies: Where smoke- and draft-control door assemblies are required, provide door hardware that meet requirements of assemblies tested according to UL 1784 and installed in compliance with NFPA 105.

Air Leakage Rate: Maximum air leakage of0.3 cfm/sq. ft. at the tested pressure differential of 0.3-inch wg of water.

Electrified Door Hardware: Listed and labeled as defined in NFPA 70, Article 100, by a testing agency acceptable to authorities having jurisdiction.

C. Means of Egress Doors: Latches do not require more than 15 lbf to release the latch. Locks do not require use of a key, tool, or special knowledge for operation.

D. Accessibility Requirements: Comply with applicable provisions in ICC A117.1 and State requirements for door hardware on doors in an accessible route.

Provide operating devices that do not require tight grasping, pinching, or twisting of the wrist and that operate with a force of not more than 5 lbf.

1. Comply with the following maximum opening-force requirements:

Interior, Non-Fire-Rated Hinged Doors: 5 lbf applied perpendicular to door.

a. Fire Doors: Minimum opening force allowable by authorities having jurisdiction.

Bevel raised thresholds with a slope of not more than 1:2. Provide thresholds not more than 1/2 inch high

Keying Conference: Conduct conference at Project site to comply with requirements in Section 01 31 00 "Project Management and Coordination." In addition to Owner, Contractor, and Owner's consultant's, conference participants shall also include Architectural Hardware Consultant and Owner's security consultant. Incorporate keying conference decisions into final keying schedule after reviewing door hardware keying system including, but not limited to, the following:

Function of building, flow of traffic, purpose of each area, degree of security required, and plans for future expansion.

2. Preliminary key system schematic diagram.
3. Requirements for key control system.
4. Requirements for access control.
5. Address for delivery of keys.

Preinstallation Conference: Conduct conference at Project site.

Review and finalize construction schedule and verify availability of materials, Installer's personnel, equipment, and facilities needed to make progress and avoid delays.

6. Inspect and discuss preparatory work performed by other trades.
7. Inspect and discuss electrical roughing-in for electrified door hardware.
8. Review sequence of operation for each type of electrified door hardware.
9. Review required testing, inspecting, and certifying procedures.

1.08 DELIVERY, STORAGE, AND HANDLING

Inventory door hardware on receipt and provide secure lock-up for door hardware delivered to Project site.

A. Tag each item or package separately with identification coordinated with the final door hardware schedule, and include installation instructions, templates, and necessary fasteners with each item or package.

B. Deliver keys and permanent cores to Owner by hand delivery, registered mail or overnight package service. Provide signed receipts to General Contractor.

1.09 COORDINATION

Coordinate layout and installation of floor or wall mounted door hardware Provide cast anchoring inserts into concrete.

A. Installation Templates: Distribute for doors, frames, and other work specified to be factory prepared. Check Shop Drawings of other work to confirm that adequate provisions are made for locating and installing door hardware to comply with indicated requirements.

B. Security: Coordinate installation of door hardware, keying, and access control with Owner's security consultant.

C. Electrical System Roughing-In: Coordinate layout and installation of electrified door hardware with connections to power supplies and building safety and security systems.

1.10 WARRANTY

Special Warranty: Manufacturer's standard form in which manufacturer agrees to repair or replace components of door hardware that fail in materials or workmanship within specified warranty period.

Failures include, but are not limited to, the following:

Structural failures including excessive deflection, cracking, or breakage.
a. Faulty operation of doors and door hardware.
b. Deterioration of metals, metal finishes, and other materials beyond normal weathering and use.

Warranty Period: Two years from date of Substantial Completion, unless otherwise indicated.

Electromechanical Locks and Exit Devices: Two years from date of Substantial Completion.
c. Exit Devices: Five years from date of Substantial Completion.
d. Manual Closers: 10 years from date of Substantial Completion.

1.11 MAINTENANCE SERVICE

Maintenance Tools and Instructions: Furnish a complete set of specialized tools and maintenance instructions for Owner's continued adjustment, maintenance, and removal and replacement of door hardware.

PART 2 - PRODUCTS

2.01 SCHEDULED DOOR HARDWARE

Provide door hardware for each door as scheduled in Part 3 "Door Hardware Schedule" to comply with requirements in this Section.

Door Hardware Sets: Provide quantity, item, size, finish or color indicated, and products complying with BHMA designations referenced.

1. Sequence of Operation: Provide electrified door hardware function, sequence of operation, and interface with other building control systems indicated.

Designations: Requirements for design, grade, function, finish, size, and other distinctive qualities of each type of door hardware are indicated in Part 3 "Door Hardware Schedule" Article. Products are identified by using door hardware designations, as follows:
References to BHMA Designations: Provide products complying with these designations and requirements for description, quality, and function.

2.02 HINGES

Hinges: BHMA A156.1. Provide template-produced hinges for hinges installed on hollow-metal doors and hollow-metal frames.

2.03 CONTINUOUS HINGES

Continuous Hinges: BHMA A156.26; minimum 0.120-inch- thick, hinge leaves with minimum overall width of 4 inches; fabricated to full height of door and frame and to template screw locations; with components finished after milling and drilling are complete.

A. Continuous, Gear-Type Hinges: Extruded-aluminum, pinless, geared hinge leaves joined by a continuous extruded-aluminum channel cap; with concealed, self-lubricating thrust bearings.

2.04 MECHANICAL LOCKS AND LATCHES

Lock Functions: As indicated in door hardware schedule.

A. Lock Throw: Comply with testing requirements for length of bolts required for labeled fire doors, and as follows:

Mortise Locks: Minimum 3/4-inch latchbolt throw.

1. Deadbolts: Minimum 1-inch.

Lock Backset: 2-3/4 inches, unless otherwise indicated.

B. Lock Trim: Sectional design.

Levers: Flat bar design with return. Forged or Cast Stainless Steel.

1. Escutcheons (Roses): Wrought round design, unless cast is indicated.
2. Dummy Trim: Match lever lock trim and escutcheons.
3. Operating Device: Lever with escutcheons (roses).

Strikes: Provide manufacturer's standard strike for each lock bolt or latchbolt complying with requirements indicated for applicable lock or latch and with strike box and curved lip extended to protect frame; finished to match lock or latch.

Flat-Lip Strikes: For locks with three-piece antifriction latchbolts, as recommended by manufacturer.

4. Extra-Long-Lip Strikes: For locks used on frames with applied wood casing trim.
5. Aluminum-Frame Strike Box: Manufacturer's special strike box fabricated for aluminum framing.
6. Rabbet Front and Strike: Provide on locksets for rabbeted meeting stiles.

Mortise Locks: BHMA A156.13; Operational Grade 1, Security Grade 2; stamped steel case with steel or brass parts; Series 1000. Provide Underwriters Laboratory or nationally reconized independent testing laboratory certification of 4 million cycle testing minimum.

2.05 AUXILIARY LOCKS

Mortise Auxiliary Locks: BHMA A156.5; Grade 1; with strike that suits frame.

2.06 ELECTROMECHANICAL LOCKS

Electromechanical Locks: BHMA A156.25; Grade 1; motor or solenoid driven; mortise unit, deadlocking latchbolt; with strike that suits frame.

2.07 ELECTROMAGNETIC LOCKS

General: BHMA A156.23; electrically powered, of strength and configuration indicated; with electromagnet attached to frame and armature plate attached to door.

Type: Full exterior or full interior, as required by application indicated.
1. Strength Ranking: 1500 lbf
2. Inductive Kickback Peak Voltage: Not more than 0 V.
3. Residual Magnetism: Not more than 0 lbfto separate door from magnet.
4. Provide power supplies and relay modules as required with emergency releases.

2.08 ELECTRIC STRIKES

Standard: BHMA A156.31, Grade 1.

A. General: Use fail-secure electric strikes.

2.09 POWER TRANSFER DEVICE

Manufactured to be concealed when door is closed. Housing made from cast materials with stainless steel tubular two piece spring loaded pivot parts. Furnish with pre-installed wires in quantity indicated or as needed for electric hardware. Cutout size to be approximately 1.25 inches wide x 9 inches long. Backplates are made of 14 gage steel. Provide 4 screw mounting holes countersunk with flathead screws. Units shall allow 180 degree opening of doors. Units “UL Listed” as Miscellaneous Fire Door Accessory. Coordinate position in door and frame with other hardware.

2.10 MANUAL FLUSH BOLTS

Manual Flush Bolts: BHMA A156.16; minimum 3/4-inch throw; designed for mortising into door edge.

2.11 AUTOMATIC AND SELF-LATCHING FLUSH BOLTS

Automatic and Self-Latching Flush Bolts: BHMA A156.16; minimum 3/4-inch throw; designed for mortising into door edge. Provide as required for fire-rated openings.

2.12 EXIT DEVICES AND AUXILIARY ITEMS

Exit Devices and Auxiliary Items: BHMA A156.3. Provide touchbar type exit devices in Architectural Metals of stainless steel with exception of operating trim, if not manufactured in stainless steel, which may be plated brass or bronze base with matching finish of other hardware. Provide Underwriters Laboratory or nationally reconized independent testing laboratory certification of 10 million cycle testing minimum.

2.13 LOCK CYLINDERS

Lock Cylinders: BHMA A156.5; Grade 1; permanent cores that are interchangeable with face finished to match lockset.

A. Construction Cores: Provide keyed construction cores for all keyed cylinders, that are replaceable by permanent cores. Provide 10 construction master keys.

2.14 KEYING

Keying System: Factory registered, complying with guidelines in BHMA A156.28, Appendix A. Incorporate decisions made in keying conference.

Great-Grand Master Key System: Change keys, a master key, a grand master key, and a great-grand master key operate cylinders.

1. Provide all cylinder cores and keys with “patented-protection” feature to prevent unauthorized key manufacturing and duplication. Only signature release type system registered at lock manufacturer for additional keys or cores.

Keys: Nickel silver.

Stamping: Permanently inscribe each key with a visual key control number and include the following notation:

Notation: "DO NOT DUPLICATE".

Quantity, provide the following:

Cylinder Change Keys: Three.

a. Master Keys: Five per building.
b. Grand Master Keys: Five.

c. Great-Grand Master Keys: Five.

2.15 KEY CONTROL SYSTEM

Key Control Cabinet: BHMA A156.5; metal cabinet with baked-enamel finish; containing key-holding hooks, labels, 2 sets of key tags with self-locking key holders, key-gathering envelopes, and temporary and permanent markers; with key capacity of 150 percent of the number of locks.

A. Fire Department Key Lock Boxes: Designed for storage of two keys with tamper switches to connect to intrusion detection system. Provide quantity as indicated on drawings.

B. Key Control System Software: BHMA A156.5, Grade 1; multiple-index system for recording and reporting key-holder listings, tracking keys and lock and key history, and printing receipts for transactions. Include instruction manual.

2.16 OPERATING TRIM

Operating Trim: BHMA A156.6; stainless steel, unless otherwise indicated.

2.17 ACCESSORIES FOR PAIRS OF DOORS

Coordinators: BHMA A156.3; consisting of active-leaf, hold-open lever and inactive-leaf release trigger; fabricated from steel with nylon-coated strike plates; with built-in, adjustable safety release; and with internal override.

A. Carry-Open Bars: BHMA A156.3; prevent the inactive leaf from opening before the active leaf; provide polished brass or bronze carry-open bars with strike plate for inactive leaves of pairs of doors unless automatic or self-latching bolts are used.

B. Astragals: BHMA A156.22.

2.18 SURFACE CLOSERS

Surface Closers: BHMA A156.4; rack-and-pinion hydraulic type with adjustable sweep and latch speeds controlled by key-operated valves, forged-steel main arm and Parallel rigid arm as indicated. Comply with manufacturer's written recommendations for size of door closers depending on size of door, exposure to weather, and anticipated frequency of use. Provide milti-sized closers, adjustable to meet field conditions and requirements for opening force. Provide with Advanced back-check feature as indicated. Provide Underwriters Laboratory or nationally reconized independent testing laboratory certification of 10 million cycle testing minimum.

2.19 MECHANICAL STOPS AND HOLDERS

Wall- and Floor-Mounted Stops: BHMA A156.16; cast brass, bronze, base metal, plated to match other hardware.

2.20 OVERHEAD STOPS AND HOLDERS

Overhead Stops and Holders: BHMA A156.8; stainless steel.

2.21 DOOR GASKETING

Door Gasketing: BHMA A156.22; air leakage not to exceed 0.50 cfm per foot of crack length for gasketing other than for smoke control, as tested according to ASTM E 283; with resilient or flexible seal strips that are easily replaceable and readily available from stocks maintained by manufacturer. Provide aluminum housings of 1-1/2-inch width minimum, for installation of surface mounted hardware.

2.22 THRESHOLDS

Thresholds: BHMA A156.21; fabricated to full width of opening indicated.

2.23 METAL PROTECTIVE TRIM UNITS

Metal Protective Trim Units: BHMA A156.6; fabricated from 0.050-inch- thick stainless steel; with manufacturer's standard machine or self-tapping countersunk screw fasteners. Provide all plates with 4-bevel edges.

2.24 SLIDING DOOR HARDWARE

General: BHMA A156.14; consisting of complete sets including rails, hangers, supports, bumpers, floor guides, and accessories indicated.

A. Pocket Sliding Door Hardware: Rated for doors weighing up to 250 lb

2.25 AUXILIARY DOOR HARDWARE

Auxiliary Hardware: BHMA A156.16.

2.26 PADLOCKS

ASTM E883, size 50 mm (2 inch) wide with chain; furnish extended shackles as required by job conditions. Provide padlocks, with keyed cores to match system.

2.27 FABRICATION

Manufacturer's Nameplate: Do not provide products that have manufacturer's name or trade name displayed in a visible location except in conjunction with required fire-rated labels and as otherwise approved by Owner.

Manufacturer's identification is permitted on rim of lock cylinders only.

Base Metals: Produce door hardware units of base metal indicated, fabricated by forming method indicated, using manufacturer's standard metal alloy, composition, temper, and hardness. Furnish metals of a quality equal to or greater than that of specified door hardware units and BHMA A156.18.

A. Fasteners: Provide door hardware manufactured to comply with published templates prepared for machine, wood, and sheet metal screws. Provide screws that comply with commercially recognized industry standards for application intended, except aluminum fasteners are not permitted. Provide Phillips flat-head screws with finished heads to match surface of door hardware, unless otherwise indicated.

Concealed Fasteners: For door hardware units that are exposed when door is closed, except for units already specified with concealed fasteners. Do not use through bolts for installation where bolt head or nut on opposite face is exposed unless it is the only means of securely attaching the door hardware. Where through bolts are used on hollow door and frame construction, provide sleeves for each through bolt.

1. Fire-Rated Applications:

Wood or Machine Screws: For the following:

Hinges mortised to doors or frames; use threaded-to-the-head wood screws for wood doors and frames.

1) Strike plates to frames.
2) Closers to doors and frames.

Steel Through Bolts: For the following unless door blocking is provided:

Surface hinges to doors.

3) Closers to doors and frames.
4) Surface-mounted exit devices.

Spacers or Sex Bolts: For through bolting of hollow-metal doors.

2. Fasteners for Wood Doors: Comply with requirements in DHI WDHS.2, "Recommended Fasteners for Wood Doors."
3. Gasketing Fasteners: Provide noncorrosive fasteners for exterior applications and elsewhere as indicated.

2.28 FINISHES

Provide finishes complying with BHMA A156.18 as indicated in door hardware schedule.

A. Protect mechanical finishes on exposed surfaces from damage by applying a strippable, temporary protective covering before shipping.

B. Appearance of Finished Work: Variations in appearance of abutting or adjacent pieces are acceptable if they are within one-half of the range of approved Samples. Noticeable variations in the same piece are not acceptable. Variations in appearance of other components are acceptable if they are within the range of approved Samples and are assembled or installed to minimize contrast.

PART 3 - EXECUTION

3.01 EXAMINATION

Examine doors and frames, with Installer present, for compliance with requirements for installation tolerances, labeled fire-rated door assembly construction, wall and floor construction, and other conditions affecting performance.

A. Examine roughing-in for electrical power systems to verify actual locations of wiring connections before electrified door hardware installation.

B. Proceed with installation only after unsatisfactory conditions have been corrected.

3.02 PREPARATION

Steel Doors and Frames: For surface applied door hardware, drill and tap doors and frames according to ANSI/SDI A250.6.

A. Wood Doors: Comply with DHI WDHS.5 "Recommended Hardware Reinforcement Locations for Mineral Core Wood Flush Doors."

3.03 INSTALLATION

Mounting Heights: Mount door hardware units at heights to comply with the following] unless otherwise indicated or required to comply with governing regulations.

Standard Steel Doors and Frames: ANSI/SDI A250.8.
1. Custom Steel Doors and Frames: HMMA 831.
2. Wood Doors: DHI WDHS.3, "Recommended Locations for Architectural Hardware for Wood Flush Doors."

Install each door hardware item to comply with manufacturer's written instructions. Where cutting and fitting are required to install door hardware onto or into surfaces that are later to be painted or finished in another way, coordinate removal, storage, and reinstallation of surface protective trim units with finishing. Do not install surface-mounted items until finishes have been completed on substrates involved.

Set units level, plumb, and true to line and location. Adjust and reinforce attachment substrates as necessary for proper installation and operation.
3. Drill and countersink units that are not factory prepared for anchorage fasteners. Space fasteners and anchors according to industry standards.

Hinges: Install types and in quantities indicated in door hardware schedule but not fewer than the number recommended by manufacturer for application indicated or one hinge for every 30 inches of door height, whichever is more stringent, unless other equivalent means of support for door, such as spring hinges or pivots, are provided.

B. Lock Cylinders: Install construction cores to secure building and areas during construction period.

Replace construction cores with permanent cores as directed by Owner.

Key Control System: Tag keys and place them on markers and hooks in key control system cabinet, as determined by final keying schedule.

C. Boxed Power Supplies: Locate power supplies as indicated or, if not indicated, above accessible ceilings. Verify location with Owner.

Configuration: Provide one power supply for each door opening with electrified door hardware. Subject to review for quantity requirement and coordination with access system.

Thresholds: Set thresholds for exterior doors and other doors indicated in full bed of sealant complying with requirements specified in Section 07 92 00 "Joint Sealants."

D. Stops: Provide floor stops for doors unless wall or other type stops are indicated in door hardware schedule. Do not mount floor stops where they will impede traffic.

E. Perimeter Gasketing: Apply to head and jamb, forming seal between door and frame. Do not cut, notch or otherwise destroy the integrity of aluminum housing mounted seals. Install before other surface mounted hardware and template accordingly.

F. Meeting Stile Gasketing: Fasten to meeting stiles, forming seal when doors are closed.

G. Door Bottoms: Apply to bottom of door, forming seal with threshold when door is closed.

3.04 ADJUSTING

Initial Adjustment: Adjust and check each operating item of door hardware and each door to ensure proper operation or function of every unit. Replace units that cannot be adjusted to operate as intended. Adjust door control devices to compensate for final operation of heating and ventilating equipment and to comply with referenced accessibility requirements.

Door Closers: Adjust sweep period to comply with accessibility requirements and requirements of authorities having jurisdiction.

3.05 CLEANING AND PROTECTION

Clean adjacent surfaces soiled by door hardware installation.

A. Clean operating items as necessary to restore proper function and finish.

B. Provide final protection and maintain conditions that ensure that door hardware is without damage or deterioration at time of Substantial Completion.

3.06 DEMONSTRATION

ngage a factory-authorized service representative to train Owner's maintenance personnel to adjust, operate, and maintain door hardware and door hardware finishes. Refer to Section 01 79 00 "Demonstration and Training."

3.07 DOOR HARDWARE SCHEDULE

Option List:

Code	Description
HT	HOSPITAL TIPS-HEAVY WEIGHT
TS	TOUCHBAR MONITORING SWITCH
B4E	BEVELED 4 EDGES - KICK PLATES
EDA	EXTRA DUTY ARM (SOLID FORGED)
ELR	ELECTRIC LATCH RETRACTION
MDR	MOTOR DRIVE RETRACTION
MCS	MULLION CAP SPACER (OTHER FINISHES)
RQE	REQUEST TO EXIT
VIN	VISUAL INDICATOR
RSS	REVERSE SECURITY STUD HINGES
CSK	COUNTER SINKING OF PLATES
SSMS/ES	SS MACHINE SCREWS/ANCHOR

A. Finish List:

Code	Description
625	Bright Chromium Plated
626	Satin Chromium Plated
630	Satin Stainless Steel
628	Aluminum
689	Aluminum Painted
GR	Grey
652	Chromium Plated, Dull

B. Door Hardware Sets:

SET #1 - Alum Entry (CR)

1	Continuous Hinge	A31331G	628
1	Elec. Exit Device	TYPE 4-03 x ELR x RQE	630
1	Door Pull	J402 - 1" DIA x 10" CTC x CONC MTG	630
1	Door Closer	C02061 x PT4G PT4J x EDA	689
1	Power Transfer	EPT	
1	Power Supply	PS/ELR	
1	Drop Plate	DP	689
1	Door Position Switch	BY SECURITY SECTION	
1	Weatherstrip	BY DOOR MFG	
1	Door Sweep	R3B436	
1	Saddle Threshold	J32130-4" WIDE x SSMS/ES	

Operation:
Door secured by electric exit device
Card reader signals exit to retract allowing door to be pulled open, then relocks.
Access system allows "dogging-open" for daytime push pull
RQE for shunt of access system on exit
Free egress at all times by depressing push bar and pushing door open.

SET #2 - HM Exit (M)

3	Hinges	A5111 4 1/2 x 4 1/2 NRP	630
1	Elec. Exit Device	TYPE 1-03 x GRIP PULL x RQE	630
1	Rim Cylinder	E09261	626
1	Core	E09241	626
1	Door Closer	C02061 x PT4G PT4J x EDA	689
1	Power Transfer	EPT	
1	Door Position Switch	BY SECURITY SECTION	
1	Weatherstrip	R3E166	
1	Drip Cap	R3Y976	
1	Door Sweep	R3B436	

NOTE: RQE for shunt of access system

SET #3 - HM Exit (CR)

3	Hinges	A5111 4 1/2 x 4 1/2 NRP	630
1	Elec. Exit Device	TYPE 1-03 x GRIP PULL x ELR x RQE	630
1	Rim Cylinder	E09261	626
1	Core	E09241	626
1	Door Closer	C02061 x PT4G PT4J x EDA	689
1	Power Supply	PS/ELR	
1	Power Transfer	EPT	
1	Card Reader	BY SECURITY SECTION	
1	Door Position Switch	BY SECURITY SECTION	
1	Drip Cap	R3Y976	
1	Weatherstrip	R3E166	
1	Door Sweep	R3B436	
1	Saddle Threshold	J32130-5" WIDE x SSMS/ES	

Operation:
Door secured by electric exit device
Card reader signals exit to retract allowing door to be pulled open, then relocks.
Access system allows "dogging-open" for daytime push pull
RQE for shunt of access system on exit
Free egress at all times by depressing push bar and pushing door open.

SET #4 - HM - MECH (SGL)

3	Hinges	A5111 4 1/2 x 4 1/2 NRP	630
1	Storeroom Lockset	F07	630
1	Mortise Cylinder	E09251	626
1	Core	E09241	626
1	Overhead Holder	C02511 x SNB	630
1	Weatherstrip	R3E166	
1	Drip Cap	R3Y976	
1	Door Sweep	R3B436	
1	Saddle Threshold	J32130-5" WIDE x SSMS/ES	

SET #5 - HM - Entry (CR)

3	Hinges	A5111 4 1/2 x 4 1/2 NRP	630
1	Electro-mech Lock	F07 x ELEC UNLOCK x RQE	630
1	Mortise Cylinder	E09251	626
1	Core	E09241	626
1	Door Closer	C02021 x PT4H PT4J x EDA	689
1	Kick Plate	J102 10" x 2" LDW B4E CSK	630
1	Power Transfer	EPT	
1	Card Reader	BY SECURITY SECTION	
1	Door Position Switch	BY SECURITY SECTION	
1	Power Supply	PS/EH	
1	Drip Cap	R3Y976	
1	Weatherstrip	R3E166	
1	Door Sweep	R3B436	
3	Door Silencers	L03011	GR

Operation:
Door secured by electric lockset
Card reader signals lockset to release outside lever allowing door to be opened, then relocks.
Access system allows "always released" for daytime operation.
RQE for shunt of access system on exit
Free egress at all times by turning inside lever and opening door..

SET #6 - HM - Entry (CR)

6	Hinges	A5111 4 1/2 x 4 1/2 NRP	630
2	Flush Bolt	L04251	626
1	Electro-mech Lock	F07 x ELEC UNLOCK x RQE	630
1	Mortise Cylinder	E09251	626
1	Core	E09241	626
1	Door Closer	C02061 x PT4G PT4J x EDA	689
1	Overhead Holder	C02511 x SNB	630
2	Kick Plate	J102 10" x 2" LDW B4E CSK	630
1	Power Transfer	EPT	
1	Card Reader	BY SECURITY SECTION	
1	Door Position Switch	BY SECURITY SECTION	
1	Power Supply	PS/EH	
1	Weatherstrip	R3E166	
1	Astragal	R3E616	
1	Drip Cap	R3Y976	
2	Door Sweep	R3B436	
1	Saddle Threshold	J32130-5" WIDE x SSMS/ES	
2	Door Silencers	L03011	GR

Operation:
Door secured by electric lockset
Card reader signals lockset to release outside lever allowing door to be opened, then relocks.
Access system allows "always released" for daytime operation.
RQE for shunt of access system on exit
Free egress at all times by turning inside lever and opening door..

SET #7 - HM - MECH

6	Hinges	A5111 4 1/2 x 4 1/2 NRP	630
2	Flush Bolt	L04251	626
1	Storeroom Lockset	F07	630
1	Mortise Cylinder	E09251	626
1	Core	E09241	626
1	Door Closer	C02061 x PT4G PT4J x EDA	689
1	Overhead Holder	C02511 x SNB	630
2	Kick Plate	J102 10" x 2" LDW B4E CSK	630
1	Astragal	R3E616	
1	Drip Cap	R3Y976	
2	Door Sweep	R3B436	
1	Saddle Threshold	J32130-5" WIDE x SSMS/ES	
2	Door Silencers	L03011	GR

SET #8 - HM - Shop (SGL)

3	Hinges	A5111 4 1/2 x 4 1/2 NRP	630

1	Office Lockset	F04	630
1	Core	E09241	626
1	Mortise Cylinder	E09251	626
1	Door Closer	C02061 x PT4G PT4J x EDA	689
1	Kick Plate	J102 10" x 2" LDW B4E CSK	630
1	Weatherstrip	R3E166	
1	Drip Cap	R3Y976	
1	Door Sweep	R3B436	
1	Saddle Threshold	J32130-5" WIDE x SSMS/ES	
3	Door Silencers	L03011	GR

SET #9 - HM - Shop

6	Hinges	A5111 4 1/2 x 4 1/2 NRP	630
2	Flush Bolt	L04251	626
1	Office Lockset	F04	630
1	Core	E09241	626
1	Mortise Cylinder	E09251	626
1	Door Closer	C02061 x PT4G PT4J x EDA	689
1	Overhead Holder	C02511 x SNB	630
2	Kick Plate	J102 10" x 2" LDW B4E CSK	630
1	Weatherstrip	R3E166	
1	Drip Cap	R3Y976	
1	Astragal	R3E616	
2	Door Sweep	R3B436	
2	Door Silencers	L03011	GR

SET #10 - HM - Exit (CR)

6	Hinges	A5111 4 1/2 x 4 1/2 NRP	630
1	Removable Mullion	TYPE 22 (KEYED)	689
1	Elec. Exit Device	TYPE 1-03 x GRIP PULL x ELR x RQE	630
1	Exit Device	TYPE 1-01 x BLANK ESCU	630
1	Rim Cylinder	E09261	626
1	Mortise Cylinder	E09251	626
2	Core	E09241	626
2	Door Closer	C02061 x PT4G PT4J x EDA	689
2	Kick Plate	J102 10" x 2" LDW B4E CSK	630
1	Power Supply	PS/EH	
1	Power Transfer	EPT	
1	Drip Cap	R3Y976	
1	Weatherstrip	R3E166	
1	Gasketing	R0E156 (MULL SEAL)	
2	Door Sweep	R3B436	
1	Saddle Threshold	J32130-5" WIDE x SSMS/ES	
2	Door Silencers	L03011	GR

SET #11 - HM - Entry I/S (CR)

3	Hinges	A5111 4 1/2 x 4 1/2	630
1	Electro-mech Lock	F07 x ELEC UNLOCK x RQE	630
1	Core	E09241	626
1	Mortise Cylinder	E09251	626
1	Door Closer	C02051 x PT4D PT4H	689
1	Kick Plate	J102 10" x 2" LDW B4E CSK	630
1	Mop Plate	J103 4" x 1" LDW B4E CSK	630
1	Door Stop	L02011	626
1	Power Supply	PS/EH	
1	Door Position Switch	BY SECURITY SECTION	
1	Card Reader	BY SECURITY SECTION	
1	Weatherstrip	R3E166	
1	Drip Cap	R3Y976	
1	Door Bottom	R3Y536	
3	Door Silencers	L03011	GR

Operation:
Door secured by electric lockset
Card reader signals lockset to release outside lever allowing door to be opened, then relocks.
Access system allows "always released" for daytime operation.
RQE for shunt of access system on exit
Free egress at all times by turning inside lever and opening door..

SET #12 - HM - Entry I/S Service

3	Hinges	A5111 4 1/2 x 4 1/2	630
1	Classroom Lockset	F05	630
1	Core	E09241	626
1	Mortise Cylinder	E09251	626
1	Door Closer	C02051 x PT4D PT4H	689
1	Kick Plate	J102 10" x 2" LDW B4E CSK	630
1	Mop Plate	J103 4" x 1" LDW B4E CSK	630
1	Door Stop	L02011	626
1	Weatherstrip	R3E166	
1	Drip Cap	R3Y976	
1	Door Bottom	R3Y536	
1	Saddle Threshold	J32130-5" WIDE x SSMS/ES	

SET #13 - HM - Entry Restroom

3	Hinges	A5111 4 1/2 x 4 1/2	630
1	Keyed Privacy Lockset	F13 x VIN	630
1	Core	E09241	626
1	Mortise Cylinder	E09251	626
1	Door Closer	C02051 x PT4D PT4H	689
1	Kick Plate	J102 10" x 2" LDW B4E CSK	630
1	Mop Plate	J103 4" x 1" LDW B4E CSK	630
1	Weatherstrip	R3E166	
1	Drip Cap	R3Y976	
1	Door Bottom	R3Y536	
1	Saddle Threshold	J32130-5" WIDE x SSMS/ES	

SET #14 – Alum – Entry (CR-AO)

2	Continuous Hinge	A31331G	628
1	Removable Mullion	TYPE 22 (KEYED)	689
1	Elec. Exit Device	TYPE 4-01 x MDR x DUAL RQE	630
1	Elec. Exit Device	TYPE 4-03 x MDR x RQE	630
1	Rim Cylinder	E09261	626
1	Core	E09241	626
2	Door Pull	J402 - 1" DIA x 10" CTC x CONC MTG	630
1	Auto Operator	C02041 (A156.19) ELEC MOTOR (CLD-4990)	628
2	Actuator	36” HALF ROUND (WIKK I 36-5)	630
1	Actuator Bollard	36” SLAB MTG (WIKK I 36-3)	630
1	Door Closer	C02041 x PT4J	689
2	Conc. O. H. Holder	C01541 (SLIM PROFILE)	630
2	Power Transfer	EPT	
1	Power Supply	PS/MDR	
1	Drop Plate	DP	689
2	Door Position Switch	BY SECURITY SECTION	
1	Card Reader	BY SECURITY SECTION	
1	Weatherstrip	BY DOOR MFG	
1	Gasketing	R0E156 (MULL SEAL)	
2	Door Sweep	R3B436	
1	Saddle Threshold	J32130-4" WIDE x SSMS/ES	

Operation:
Doors secured by electric exit devices
Card reader signals exit to retract allowing door to be pulled open or use of Auto Operator, then relocks. Outside actuator connected to dual RQE switch for after hours de-activation.
Access system allows "dogging-open" for daytime push pull.
Provide “motor-drive” retraction for touch-bar depression upon dogged open function.
RQE for shunt of access system on exit
Free egress at all times by depressing push bar and pushing door open.

NOTE: All remaining Weatherseals by Door Manufacturer.

SET #15 - Overhead Lift Type Doors, Welded Wire Cage Doors, Welded Wire Gates, Chain Link Gates

1	Padlock	E883	626
1	Mortise Cylinder	E09251	626
1	Core	E09241	626

NOTE: Coordinate Padlock / or / Cylinder as required by Door Manufacturer.

SET #16 - HM Exit (CR-INTERLOCK)

3	Hinges	A5111 4 1/2 x 4 1/2 NRP	630
1	Elec. Exit Device	TYPE 1-03 x GRIP PULL x ELR x RQE	630
1	Rim Cylinder	E09261	626
1	Core	E09241	626
1	Door Closer	C02061 x PT4G PT4J x EDA	689
1	Power Supply	PS/ELR	
1	Power Transfer	EPT	
1	Card Reader	BY SECURITY SECTION	
1	Door Position Switch	BY SECURITY SECTION	
1	Magnetic Lock	E08501 – 1650 LBS W/DPS	
1	Power Supply	PS/EH x INTERLOCK RELAYS (SDC 631RF x UR1A)	
1	Emergency Release	EER (SDC 423M)	630
1	Drip Cap	R3Y976	
1	Weatherstrip	R3E166	
1	Door Sweep	R3B436	
1	Saddle Threshold	J32130-5" WIDE x SSMS/ES	

Operation:
Door secured by electric exit device
Card reader signals exit to retract allowing door to be pulled open, then relocks.
Magnetic lock for security system interlock of doors
Emergency release for redundancy requirements.
RQE for shunt of access system on exit
Free egress at all times by depressing push bar and pushing door open.

SET #17 - Pedestrian Gate (CR)

2	Pivot Closer	C09513 (D&D TECH – SURE CLOSE #57)	FF
2	Mounting Boxes	BX-515175 (KEEDEX)	FF
1	Exit Device	TYPE 1-03 x GRIP PULL TRIM	630
1	Rim Cylinder	E09261	626
1	Core	E09241	626
1	Strike Mounting Box	K-BXES14- BLANK (KEEDEX)	FF
1	Electric Strike	E09371 x LATCH MONITOR (HES 9600 LBM)	630
1	Power Supply	PS/EH	

Operation:
Gate secured by exit device
Card reader signals electric strike to release allowing gate to be pulled open then relocks.
Free egress at all times by depressing push bar and pushing gate open.

NOTE: Coordinate Materials with Gate Manufacturer.

SET #100 - Office

3	Hinges	A8112 4 1/2 x 4 1/2	652

1	Office Lockset	F04	630
1	Mortise Cylinder	E09251	626
1	Core	E09241	626
1	Door Stop	L02141	626
3	Door Silencers	L03011	GR

SET #101 - Conference | Quiet

3	Hinges	A8112 4 1/2 x 4 1/2	652
1	Classroom Lockset	F05	630
1	Core	E09241	626
1	Mortise Cylinder	E09251	626
1	Door Stop	L02141	626
1	Gasketing	R0E156	
1	Auto Door Bottom	R3C346	

NOTE: Provide sill if required

SET #102 - Wellness

3	Hinges	A8112 4 1/2 x 4 1/2	652
1	Classroom Lockset	F05	630
1	Mortise Cylinder	E09251	626
1	Core	E09241	626
1	Door Closer	C02051 x PT4D PT4H	689
1	Kick Plate	J102 10" x 2" LDW B4E CSK	630
1	Door Stop	L02141	626
1	Gasketing	R0E156	
1	Auto Door Bottom	R3C346	

SET #103 - Passage

3	Hinges	A8112 4 1/2 x 4 1/2	652
1	Passage Set	45H-0N15H	630
1	Door Stop	L02141	626
3	Door Silencers	L03011	GR

SET #104 - Restroom (SGL)

3	Hinges	A8112 4 1/2 x 4 1/2	652
1	Privacy Set	F02 x VIN	630
1	Door Closer	C02051 x PT4D PT4H	689
1	Kick Plate	J102 10" x 2" LDW B4E CSK	630
1	Mop Plate	J103 4" x 1" LDW B4E CSK	630
1	Door Stop	L02141	626
1	Gasketing	R0E156	

SET #105 - Restroom | Breakroom (Group)

3	Hinges	A8111 4 1/2 x 4 1/2	652
1	Pull Plate	J405 - 4" x 16"	630
1	Door Closer	C02051 x PT4D PT4H /OR/ C02061 AS REQ'D	689
1	Kick Plate	J102 10" x 2" LDW B4E CSK	630
1	Mop Plate	J103 4" x 1" LDW B4E CSK	630
1	Push Plate	J301 - 8" x 16"	630
1	Door Stop	L02011	626
3	Door Silencers	L03011	GR

SET #106 - Storage (SGL)

3	Hinges	A8112 4 1/2 x 4 1/2	652
1	Storeroom Lockset	F07	630
1	Mortise Cylinder	E09251	626
1	Core	E09241	626
1	Kick Plate	J102 10" x 2" LDW B4E CSK	630
1	Door Stop	L02141	626
3	Door Silencers	L03011	GR

SET #107 - Storage

6	Hinges	A8112 4 1/2 x 4 1/2 NRP	652
2	Flush Bolt	L04251	626
1	Classroom Lockset	F05	630
1	Core	E09241	626
1	Mortise Cylinder	E09251	626
1	Overhead Stop	C02542 x SNB	630
1	Door Stop	L02011	626
1	Astragal	R3E616	
2	Door Silencers	L03011	GR

SET #109 - Mech I/S

3	Hinges	A8112 4 1/2 x 4 1/2	652
1	Storeroom Lockset	F07	630
1	Mortise Cylinder	E09251	626
1	Core	E09241	626
1	Door Stop	L02141	626
3	Door Silencers	L03011	GR

SET #110 - Custodial

3	Hinges	A8112 4 1/2 x 4 1/2	652
1	Classroom Lockset	F05	630
1	Mortise Cylinder	E09251	626
1	Core	E09241	626
1	Kick Plate	J102 10" x 2" LDW B4E CSK	630
1	Door Stop	L02141	626
3	Door Silencers	L03011	GR

SET #111 - Secure I/S (CR)

3	Hinges	A8112 4 1/2 x 4 1/2 NRP	652
1	Electro-mech Lock	F07 x ELEC UNLOCK x RQE	630
1	Core	E09241	626
1	Mortise Cylinder	E09251	626
1	Kick Plate	J102 10" x 2" LDW B4E CSK	630
1	Door Stop	L02141	626
1	Power Transfer	EPT	
1	Power Supply	PS/EH	
1	Door Position Switch	BY SECURITY SECTION	
1	Card Reader	BY SECURITY SECTION	
3	Door Silencers	L03011	GR

Operation:
Door secured by electric lockset
Card reader signals lockset to release outside lever allowing door to be opened, then relocks.
Access system allows "always released" for daytime operation.
RQE for shunt of access system on exit
Free egress at all times by turning inside lever and opening door..

SET #112 - Secure O/S (CR)

3	Hinges	A8112 4 1/2 x 4 1/2 NRP	652
1	Electro-mech Lock	F07 x ELEC UNLOCK x RQE	630
1	Mortise Cylinder	E09251	626
1	Core	E09241	626
1	Door Closer	C02021 x PT4D PT4H x EDA	689
1	Kick Plate	J102 10" x 2" LDW B4E CSK	630
1	Door Stop	L02141	626
1	Power Transfer	EPT	
1	Card Reader	BY SECURITY SECTION	
1	Door Position Switch	BY SECURITY SECTION	
1	Power Supply	PS/EH	
3	Door Silencers	L03011	GR

Operation:
Door secured by electric lockset
Card reader signals lockset to release outside lever allowing door to be opened, then relocks.
Access system allows "always released" for daytime operation.
RQE for shunt of access system on exit
Free egress at all times by turning inside lever and opening door..

SET #113 - Secure ED (CR)

3	Hinges	A8111 4 1/2 x 4 1/2 NRP	652
1	Elec. Exit Device	TYPE 1-08 x ELEC UNLOCK TRIM x RQE	630
1	Rim Cylinder	E09261	626
1	Core	E09241	626
1	Door Closer	C02021 x PT4D PT4H x EDA	689
1	Kick Plate	J102 10" x 2" LDW B4E CSK	630
1	Door Stop	L02141	626
1	Power Supply	PS/EH	
1	Door Position Switch	BY SECURITY SECTION	
1	Card Reader	BY SECURITY SECTION	
1	Gasketing	R0E156	

Operation:
Door secured by electric exit device
Card reader signals exit to release outside lever allowing door to be opened, then relocks.
Access system allows "always-released" for daytime operation
RQE for shunt of access system on exit
Free egress at all times by depressing push bar and pushing door open.

SET #114 - Secure ED (EO)

3	Hinges	A8111 4 1/2 x 4 1/2 NRP	652
1	Exit Device	TYPE 1-01 x BLANK ESCU	630
1	Rim Cylinder	E09261	626
1	Core	E09241	626
1	Door Closer	C02021 x PT4D PT4H x EDA	689
1	Kick Plate	J102 10" x 2" LDW B4E CSK	630
1	Door Stop	L02141	626
1	Door Position Switch	BY SECURITY SECTION	
1	Gasketing	R0E156	

NOTE: Exit Only

SET #115 - Alum Int (RR)

1	Continuous Hinge	A31331G	628
1	Elec. Exit Device	TYPE 4-03 x ELR x RQE	630
1	Rim Cylinder	E09261	626
1	Core	E09241	626
1	Door Pull	J402 - 1" DIA x 10" CTC x CONC MTG	630
1	Door Closer	C02021 x PT4D PT4H x EDA	689
1	Door Stop	L02141	626
1	Power Transfer	EPT	
1	Power Supply	PS/ELR	
1	Drop Plate	DP	689
1	Door Position Switch	BY SECURITY SECTION	
1	Card Reader	BY SECURITY SECTION	
1	Weatherstrip	BY DOOR MFG	

Operation:
Door secured by electric exit device
Remote Release switch signals exit to retract allowing door to be pulled open, then relocks.
Access system or remote release allows "dogging-open" for daytime push pull
RQE for shunt of access system on exit
Free egress at all times by depressing push bar and pushing door open.

SET #116 - Maint | Office

3	Hinges	A8112 4 1/2 x 4 1/2	652
1	Office Lockset	F04	630
1	Core	E09241	626
1	Mortise Cylinder	E09251	626
1	Door Closer	C02051 x PT4D PT4H	689
1	Kick Plate	J102 10" x 2" LDW B4E CSK	630
1	Door Stop	L02141	626
3	Door Silencers	L03011	GR

SET #117 - Maint | Office (WS)

3	Hinges	A8112 4 1/2 x 4 1/2	652
1	Office Lockset	F04	630
1	Core	E09241	626
1	Mortise Cylinder	E09251	626
1	Door Closer	C02051 x PT4D PT4H	689
1	Kick Plate	J102 10" x 2" LDW B4E CSK	630
1	Door Stop	L02141	626
1	Weatherstrip	R3E166	
1	Auto Door Bottom	R3C346	
1	Saddle Threshold	J32130-4" WIDE x SSMS/ES	AL

SET #118 - Maint WS (CR)

3	Hinges	A8112 4 1/2 x 4 1/2	652
1	Electro-mech Lock	F07 x ELEC UNLOCK x RQE	630
1	Core	E09241	626
1	Mortise Cylinder	E09251	626
1	Kick Plate	J102 10" x 2" LDW B4E CSK	630
1	Door Position Switch	BY SECURITY SECTION	
1	Card Reader	BY SECURITY SECTION	
1	Weatherstrip	R3E166	
1	Auto Door Bottom	R3C346	
3	Door Silencers	L03011	GR

Operation:
Door secured by electric lockset
Card reader signals lockset to release outside lever allowing door to be opened, then relocks.
Access system allows "always released" for daytime operation.
RQE for shunt of access system on exit
Free egress at all times by turning inside lever and opening door..

SET #119 - Maint Exit WS

3	Hinges	A8111 4 1/2 x 4 1/2 NRP	652
1	Exit Device	TYPE 1-03 x GRIP PULL	630
1	Rim Cylinder	E09261	626
1	Core	E09241	626
1	Door Closer	C02021 x PT4H PT4J x EDA	689
1	Kick Plate	J102 10" x 2" LDW B4E CSK	630
1	Door Stop	L02011	626
1	Weatherstrip	R3E166	
1	Door Sweep	R3B436	
1	Saddle Threshold	J32130-5" WIDE x SSMS/ES	AL
3	Door Silencers	L03011	GR

SET #120 - Maint Training

3	Hinges	A8111 4 1/2 x 4 1/2 NRP	652
1	Exit Device	TYPE 1-08	630
1	Rim Cylinder	E09261	626
1	Core	E09241	626
1	Door Closer	C02061 x PT4G PT4J x EDA	689
1	Kick Plate	J102 10" x 2" LDW B4E CSK	630
1	Gasketing	R0E156	

SET #121 - VMNY Room (CR-INTERLOCK)

3	Sec Hinges	HT A5111 5 x 4 1/2 RSS	630
1	Sec Electro-mech Lock	F15 x ELEC UNLOCK x RQE x CAST ESCU	630
1	Mortise Cylinder	E09251	626
1	Core	E09241	626
1	Door Closer	C02061 x PT4G PT4J x EDA	689
1	Kick Plate	J102 10" x 2" LDW B4E CSK	630
1	Door Stop	L02141	626
1	Door Viewer	L03221-180	625
1	Power Transfer	EPT	
1	Magnetic Lock	E08501 – 1650 LBS W/DPS (SDC-1511D)	628
1	Emergency Release	EER (SDC 423M)	630
1	Power Supply	PS/EH x INTERLOCK RELAYS (SDC 631RF x UR1A)	
1	Gasketing	R0E156	
1	Auto Door Bottom	R3C346	
3	Door Silencers	L03011	GR

Operation:
Door secured by electric lockset
Card reader signals lockset to release outside lever allowing door to be opened, then relocks. Magnetic lock for system interlock of doors. Power provided by exterior Set RQE for shunt of access system on exit
Emergency release for redundancy requirements.
Free egress at all times by turning inside lever and opening door..

SET #122 – Pocket Door

1	Pocket Door Set	D8671 (250 LB RATED)	628
1	Pocket Door Pull	D2801 (ADA) (#1069 TRIMCO)	630
1	Pocket Door Lockset	E06131 T-TURN ONLY (ACCURATE 2001 SLD)	626
1	Pocket Door Lock Trim	D0781 (ACCURATE 24ST)	626
2	Gasketing	R0E156 (MOUNT ON FRAME FOR SEAL TO DOOR EDGES)	

END OF SECTION 08 71 00

SECTION 08111
STANDARD STEEL DOORS

PART 1 GENERAL

1.01 SECTION INCLUDES

A. Non - Fire Rated Steel Doors.

1.02 RELATED SECTIONS

A. Section 08112 - Standard Steel Frames.
B. Section 08700 - Door Hardware.
C. Section 08800 - Glazing: Glass for doors.
D. Section 09900 - Painting: Field painting of doors.

1.03 REFERENCES

A. ANSI A117.1 - Specifications for Making Buildings and Facilities Accessible to and Usable by Physically Handicapped People.
B. ANSI/SDI-100 - Standard Steel Doors and Frames.
C. ASTM A525 - Steel Sheet, Zinc-Coated (Galvanized) by the Hot-Dip Process.
D. ASTM C236 - Test Method for Steady-State Thermal Performance of Building Assemblies by Means of a Guarded Hot-Box.
E. ASTM E152 - Methods of Fire Tests of Door Assemblies.
F. ASTM E413 - Classification for Determination of Sound Transmission Class.
G. Door Hardware Institute (DHI) - The Installation of Commercial Steel Doors and Steel Frames, Insulated Steel Doors in Wood Frames and Builder's Hardware.
H. NFPA 80 - Fire Doors and Windows.
I. NFPA 252 - Fire Tests for Door Assemblies.
J. UL 10B - Fire Tests of Door Assemblies.

1.04 SUBMITTALS

A. Submit under provisions of Section 01300.
B. Shop Drawings: Indicate door elevations, internal reinforcement, closure method, and cut-outs for glazing, and finish.
C. Product Data: Indicate door configurations, location of cut-outs for hardware reinforcement.
D. Manufacturer's Installation Instructions: Indicate special installation instructions.
E. Manufacturer's Certificate: Certify that Products meet or exceed [specified requirements.

1.05 QUALITY ASSURANCE

A. Conform to requirements of ANSI/SDI-100 and ANSI A117.1.

1.06 QUALIFICATIONS

A. Manufacturer: Company specializing in manufacturing the Products specified in this section with minimum three years documented experience.

1.07 REGULATORY REQUIREMENTS

A. Fire Rated Door Construction: Conform to ASTM E152 and UL 10B.

B. Installed Door Assembly: Conform to NFPA 80 for fire rated class as indicated.

1.08 DELIVERY, STORAGE, AND HANDLING

A. Deliver, store, protect, and handle products to site under provisions of Section 01600.
B. Protect doors with resilient packaging.

1.09 FIELD MEASUREMENTS

A. Verify that field measurements are as indicated on shop drawings and instructed by the manufacturer.

1.10 COORDINATION

A. Coordinate work under provisions of Section 01039.
B. Coordinate the work with door opening construction, door frame and door hardware installation.

PART 2 PRODUCTS

2.01 DOOR MANUFACTURERS
A. Steel Craft.
B. Ceco Corp.
C. Amweld/Div.
D. Substitutions: Under provisions of Section 01600.

2.02 DOORS

A. Exterior Doors : SDI-100 Grade III Model 4. Extra-Heavy duty, minumum 16 gauge galvanized steel faces.

2.03 DOOR CONSTRUCTION

A. Face: Steel sheet in accordance with ANSI/SDI-100.
B. Core: Cardboard honeycomb polyurethane polystyrene foam or mineral fiberboard vertical steel stiffeners.

2.04 ACCESSORIES

A. Removeable Stops: Rolled steel shape, mitered corners; prepared for countersink style tamper proof screws.
B. Primer: Zinc chromate type.

2.05 FABRICATION

A. Astragals for Double Doors: Steel, T shaped, specifically for double doors.
B. Fabricate doors with hardware reinforcement welded in place.
C. Attach fire rated label to each door unit.

2.06 FINISH

A. Steel Sheet: Galvanized to ASTM A525 G60.
B. Primer: Air dried or Baked.

PART 3 EXECUTION

3.01 EXAMINATION

A. Verify substrate conditions under provisions of Section 01039.
B. Verify that opening sizes and tolerances are acceptable.

3.02 INSTALLATION

A. Install doors in accordance with ANSI/SDI-100 and DHI.
B. Coordinate installation of glass and glazing.
C. Coordinate installation of doors with installation of frames specified in Section 08112 and hardware specified in Section 08700.
E. Touch-up factory finished doors.

3.03 ERECTION TOLERANCES

A. Maximum Diagonal Distortion: 1/16 inch measured with straight edge, corner to corner.

3.04 ADJUSTING

A. Adjust work under provisions of Section 01700.
B. Adjust door for smooth and balanced door movement.

3.05 SCHEDULE

A. Schedule is indicated on the drawings.

END OF SECTION

SECTION 08112
STANDARD STEEL FRAMES

PART 1 GENERAL

1.01 SECTION INCLUDES

A. Fire rated and non rated steel frames.

1.03 RELATED SECTIONS

A. Section 08111 - Standard Steel Doors.
B. Section 08700 - Door Hardware.
C. Section 08800 - Glazing.
D. Section 09900 - Painting: Field painting of frames.

1.04 REFERENCES

A. ANSI A117.1 - Specifications for Making Buildings and Facilities Accessible to and Usable by Physically Handicapped People.
B. ANSI/SDI-100 - Standard Steel Doors and Frames.
C. ASTM A525 - Steel Sheet, Zinc-Coated (Galvanized) by the Hot-Dip Process.
D. ASTM E152 - Methods of Fire Tests of Door Assemblies.
E. DHI - Door Hardware Institute: The Installation of Commercial Steel Doors and Steel Frames, Insulated Steel Doors in Wood Frames and Builder's Hardware.
F. NFPA 80 - Fire Doors and Windows.
G. NFPA 252 - Fire Tests for Door Assemblies.
H. UL 10B - Fire Tests of Door Assemblies.

1.05 SUBMITTALS

A. Submit under provisions of Section 01300.
B. Shop Drawings: Indicate frame elevations, reinforcement, and finish.
C. Product Data: Indicate frame configuration, anchor types and spacings, location of cut-outs for hardware, reinforcement.
E. Manufacturer's Installation Instructions: Indicate special installation instructions.
F. Manufacturer's Certificate: Certify that Products meet or exceed [specified requirements.

1.06 QUALITY ASSURANCE

A. Conform to requirements of ANSI/SDI-100 and ANSI A117.1.

1.07 QUALIFICATIONS

A. Manufacturer: Company specializing in manufacturing the Products specified in this section with minimum three years documented experience.

1.08 REGULATORY REQUIREMENTS

A. Fire Rated Frame Construction: Conform to ASTM E152 and UL 10B.
B. Installed Frame Assembly: Conform to NFPA 80 for fire rated class same as fire door.

1.09 DELIVERY, STORAGE, AND HANDLING

A. Deliver, store, protect, and handle products to site under provisions of Section 01600.
B. Accept frames on site in manufacturer's packaging. Inspect for damage.

1.10 FIELD MEASUREMENTS

A. Verify that field measurements are as indicated on shop drawings and instructed by the manufacturer.

1.11 COORDINATION

A. Coordinate work under provisions of Section 01039.
B. Coordinate the work with frame opening construction, door and hardware installation.

PART 2 PRODUCTS

2.01 FRAME MANUFACTURERS

A. Steelcraft.
B. Allied Steel Products.
C. Am Meld/Div.
D. Substitutions: Under provisions of Section 01600.

2.02 FRAMES

A. Frames: To suit ANSI/SDI-100 Grade and Model of door specified in Section 08111.

2.03 ACCESSORIES

A. Silencers: Resilient rubber, fitted into drilled hole.
B. Removeable Stops: Rolled steel shape, mitered corners; prepared for countersink style tamper proof screws.
D. Primer: Zinc chromate type.

2.04 FABRICATION

A. Fabricate frames as welded unit.
B. Transom Bars for Glazed Lights: Fixed type, of same profiles as jamb and head.
C. Fabricate frames with hardware reinforcement plates welded in place.
D. Reinforce frames wider than 48 inches with roll formed steel channels fitted tightly into frame head, flush with top.
E. Prepare frame for silencers. Provide three single silencers for single doors on strike side. Provide two single silencers on frame head at double doors without mullions.

2.05 FINISH

A. Steel Sheet: Galvanized to ASTM A525 G60.
B. Primer: Air dried or baked.

PART 3 EXECUTION

3.01 EXAMINATION

A. Verify substrate conditions under provisions of Section 01039.
B. Verify that opening sizes and tolerances are acceptable.

3.02 INSTALLATION

A. Install frames in accordance with ANSI/SDI-100 and DHI.
B. Coordinate with wall construction for anchor placement.
C. Coordinate installation of glass and glazing.
D. Coordinate installation of frames with installation of hardware specified in Section 08700 and doors in Section 08111.
E. Install roll formed steel reinforcement channels between two abutting frames. Anchor to structure and floor.

3.03 ERECTION TOLERANCES

A. Maximum Diagonal Distortion: 1/16 inch measured with straight edges, crossed corner to corner.

3.04 SCHEDULE

A. See door schedule on the drawings.

END OF SECTION

SECTION 08229

SLIDING AUTOMATIC ENTRANCES

PART 1 - GENERAL

1.01 RELATED DOCUMENTS

Drawings and general provisions of the Contract, including General and Supplementary Conditions and Division 01 Specification Sections, apply to this Section.

1.02 SUMMARY

Section includes exterior, sliding, power-operated automatic entrances.

1.03 DEFINITIONS

AAADM: American Association of Automatic Door Manufacturers.

A. Activation Device: A control that, when actuated, sends an electrical signal to the door operator to open the door.

B. IBC: International Building Code.

C. Safety Device: A control that, to avoid injury, prevents a door from opening or closing.

D. For automatic door terminology, refer to BHMA A156.10 for definitions of terms.

1.04 COORDINATION

Coordinate sizes and locations of recesses in concrete floors for **recessed sliding tracks and recessed control mats** that control automatic entrances. Concrete, reinforcement, and formwork requirements are specified elsewhere.

A. Templates: Distribute for doors, frames, and other work specified to be factory prepared for installing automatic entrances.

B. Coordinate hardware with doors, frames, and related work to ensure proper size, thickness, hand, function, and finish. Coordinate hardware for automatic entrances with hardware required for rest of Project.

C. Electrical System Roughing-in: Coordinate layout and installation of automatic entrances with connections to power supplies **and access-control system**.

1.05 PREINSTALLATION MEETINGS

Preinstallation Conference: Conduct conference at Project site.

1.06 ACTION SUBMITTALS

Product Data: For each type of product.

Include construction details, material descriptions, dimensions of individual components and profiles, and finishes for automatic entrances.

1. Include rated capacities, operating characteristics, electrical characteristics, and furnished specialties and accessories.

Shop Drawings: For automatic entrances.

Include plans, elevations, sections, hardware mounting heights, and attachment details.

2. Indicate dimensions, weights, loads, required clearances, method of field assembly, components, and location and size of each field connection.
3. Include diagrams for power, signal, and control wiring.
4. Indicate locations of activation and safety devices.
5. Include hardware schedule and indicate hardware types, functions, quantities, and locations.

Samples for Verification: For each type of exposed finish required, in manufacturer's standard sizes.

1.07 CLOSEOUT SUBMITTALS

Operation and Maintenance Data: For automatic entrances, safety devices, and control systems to include in operation and maintenance manuals.

1.08 QUALITY ASSURANCE

Manufacturer Qualifications: A manufacturer with company certificate issued by AAADM indicating that manufacturer has a Certified Inspector on staff.

A. Installer Qualifications: Manufacturer's authorized representative who is trained and approved for installation and maintenance of units required for this Project[and who employs a Certified Inspector].

Maintenance Proximity: Not more than [two] <Insert number> hours' normal travel time from Installer's place of business to Project site.

1.09 WARRANTY

Special Warranty: Manufacturer agrees to repair or replace components of automatic entrances that fail in materials or workmanship within specified warranty period.

Failures include, but are not limited to, the following:

Structural failures including, but not limited to, excessive deflection.

a. Faulty operation of operators, controls, and hardware.
b. Deterioration of metals, metal finishes, and other materials beyond normal weathering and use.

Warranty Period: [Two] <Insert number> years from date of Substantial Completion.

Special Finish Warranty: Manufacturer agrees to repair or replace components on which finishes fail in materials or workmanship within specified warranty period.

Deterioration includes, but is not limited to, the following:

Color fading more than 5 Hunter units when tested according to ASTM D 2244.
c. Chalking in excess of a No. 8 rating when tested according to ASTM D 4214.
d. Cracking, checking, peeling, or failure of paint to adhere to bare metal.

Warranty Period: [Five] [10] [20] <Insert number> years from date of Substantial Completion.

PART 2 - PRODUCTS

2.01 AUTOMATIC ENTRANCE ASSEMBLIES

Source Limitations: Obtain sliding [**folding**] [**and**] [**swinging**] automatic entrances from single source from single manufacturer.

A. Electrical Components, Devices, and Accessories: Listed and labeled as defined in NFPA 70, by a qualified testing agency, and marked for intended location and application.

B. Power-Operated Door Standard: BHMA A156.10.

2.02 SLIDING AUTOMATIC ENTRANCES

General: Provide manufacturer's standard automatic entrances including doors, sidelites, framing, headers, carrier assemblies, roller tracks, door operators, controls, and accessories required for a complete installation.

A. Sliding Automatic Entrance <Insert drawing designation>:

Telescoping Sliding Units:

Manufacturers: Subject to compliance with requirements, [provide products by the following] [provide products by one of the following] [available manufacturers offering products that may be incorporated into the Work include, but are not limited to, the following]:

Configuration: Biparting-sliding doors with two sliding leaves sidelites on each side.

Traffic Pattern: [One] [Two] way.
a. Emergency Breakaway Capability: [As indicated on Drawings] [Sliding leaves only] [Sliding leaves and sidelites].
b. Mounting: [Between jambs] [Surface].

Configuration: sliding leaves and sidelite(s).

Traffic Pattern: [One] [Two] way.
c. Emergency Breakaway Capability: [As indicated on Drawings] [Center leaves only] [All leaves].
d. Mounting: Between jambs.

Operator Features:

Power opening and closing.

e. Drive System: Chain or belt.

f. .

Sliding-Door Carrier Assemblies and Overhead Roller Tracks: Carrier assembly that allows vertical adjustment; consisting of nylon- or delrin-covered, ball-bearing-center steel wheels operating on a continuous roller track, or ball-bearing-center steel wheels operating on a nylon- or delrin-covered, continuous roller track. Support doors from carrier assembly by cantilever and pivot assembly.

Rollers: Minimum of two ball-bearing roller wheels and two antirise rollers for each active leaf.

Sliding-Door Threshold: Threshold members and bottom-guide-track system with stainless-steel, ball-bearing-center roller wheels.

Configuration: Saddle-type threshold across door opening and surface-mounted guide-track system at sidelites.

Controls: Activation and safety devices [as indicated on Drawings and]according to BHMA standards.

Activation Device: Motion sensor mounted on each side of door header to detect pedestrians in activating zone and to open door.

g. Safety Device: Two photoelectric beams mounted in sidelite jambs on each side of door to detect pedestrians in presence zone and to prevent door from closing.

h. Safety Device: Presence sensor mounted to underside of door header and two photoelectric beams mounted in sidelite jambs on one side of the door to detect pedestrians in presence zone and to prevent door from closing.

i. Safety Device: Presence sensor mounted on each side of door header and two photoelectric beams mounted in sidelite jambs on one side of the door to detect pedestrians in presence zone and to prevent door from closing.

Finish: Finish framing, door(s), and header with high-performance organic finish (two-coat fluoropolymer) .

Color: [Light bronze] [Medium bronze] [Dark bronze] [Black] [As indicated by manufacturer's designations] [Match Architect's sample] [As selected by Architect from full range of industry colors and color densities] <Insert color>.

2.03 ENTRANCE COMPONENTS

Framing Members: Extruded aluminum, minimum 0.125 inch thick and reinforced as required to support imposed loads.

Nominal Size: [As indicated on Drawings] [1-3/4 by 4-1/2 inches] [1-3/4 by 6 inches] <Insert dimensions>.

1. Extruded Glazing Stops and Applied Trim: Minimum 0.062-inch wall thickness.

Stile and Rail Doors: 1-3/4-inch- thick, glazed doors with minimum 0.125-inch- thick, extruded-aluminum tubular stile and rail members. Mechanically fasten corners with reinforcing brackets that are welded, or incorporate concealed tie-rods that span full length of top and bottom rails.

Glazing Stops and Gaskets: [Beveled] [Square], snap-on, extruded-aluminum stops and preformed gaskets.

2. Stile Design: [As indicated on Drawings] [Thin stile, less than 1-3/4-inch nominal width] [Narrow stile, 2-1/8-inch nominal width] [Medium stile, 3-1/2-inch nominal width] [Wide stile, more than 4-inch nominal width].
3. Rail Design: [As indicated on Drawings] [5-inch nominal height] [6-1/2-inch nominal height] [10-inch nominal height].

Sidelite(s): 1-3/4-inch- deep with minimum 0.125-inch- thick, extruded-aluminum tubular stile and rail members matching door design.

Glazing Stops and Gaskets: Same materials and design as for stile and rail door.

4. Glazing Stops and Gaskets: [Beveled] [Square], snap-on, extruded-aluminum stops and preformed gaskets.
5. Muntin Bars: Horizontal tubular rail members for each sidelite; match stile design.

Brackets and Reinforcements: High-strength aluminum with nonstaining, nonferrous shims for aligning system components.

B. Signage: As required by cited BHMA standard.

Application Process: Door manufacturer's standard process .

1. Provide sign materials with instructions for field application after glazing is installed.

2.04 MATERIALS

Aluminum: Alloy and temper recommended by manufacturer for type of use and finish indicated.

Extrusions: ASTM B 221.

1. Sheet: ASTM B 209.

Steel Reinforcement: Reinforcement with corrosion-resistant primer complying with SSPC-PS Guide No. 12.00 applied immediately after surface preparation and pretreatment. Use surface preparation methods according to recommendations in SSPC-SP COM and prepare surfaces according to applicable SSPC standard.

B. Glazing: As specified in [Section 08 80 00 "Glazing."] [Section 08 88 53 "Security Glazing."]

C. Sealants and Joint Fillers: As specified in Section 07 92 00 "Joint Sealants."

D. Bituminous Coating: Cold-applied asphalt emulsion complying with ASTM D 1187.

E. Fasteners and Accessories: Corrosion-resistant, nonstaining, nonbleeding fasteners and accessories compatible with adjacent materials.

2.05 DOOR OPERATORS AND CONTROLS

General: Provide operators and controls, which include activation and safety devices, according to BHMA standards, for condition of exposure, and for long-term, maintenance-free operation under normal traffic load for type of occupancy indicated.

A. Door Operators: Provide door operators of size recommended by manufacturer for door size, weight, and movement.

Door Operator Performance: Door operators shall open and close doors and maintain them in fully closed position when subjected to Project's design wind loads.

1. Electromechanical Operators: Concealed, self-contained, overhead unit powered by fractional-horsepower, permanent-magnet dc motor; with closing speed controlled mechanically by gear train and dynamically by braking action of electric motor; with solid-state microprocessor controller; UL 325; and with manual operation with power off.

Motion Sensors: Self-contained, K-band-frequency, microwave-scanner units; fully enclosed by its plastic housing; adjustable to provide detection-field sizes and functions required by BHMA A156.10.

Provide capability for switching between bidirectional and unidirectional detection.

2. For one-way traffic, sensor on egress side shall not be active when doors are fully closed.

Presence Sensors: Self-contained, active-infrared scanner units; adjustable to provide detection-field sizes and functions required by BHMA A156.10. Sensors shall remain active at all times.

B. Photoelectric Beams: Pulsed infrared, sender-receiver assembly for recessed mounting. Beams shall not be active when doors are fully closed.

2.06 HARDWARE

General: Provide units in sizes and types recommended by automatic entrance and hardware manufacturers for entrances and uses indicated. Finish exposed parts to match door finish[unless otherwise indicated].

A. Breakaway Device for Power-Operated Doors: Device that allows door to swing out in direction of egress to full 90 degrees from any operating position. Maximum force to open door shall be as stipulated in "Performance Requirements" Article. Interrupt powered operation of door operator while in breakaway mode.

B. Deadlocks: Deadbolt operated by exterior cylinder and interior thumb turn, with minimum 1-inch-long throw bolt; BHMA A156.5, Grade 1.

Cylinders: [BHMA A156.5, Grade 1, six-pin mortise type.] [As specified in Section 08 71 00 "Door Hardware."] [As specified in Section 08 71 11 "Door Hardware (Descriptive Specification)."]

Keying: [No master] [Integrate into building master] key system.

C. Weather Stripping: Replaceable components.

Sliding Type: AAMA 701, made of wool, polypropylene, or nylon woven pile with nylon-fabric or aluminum-strip backing.

2.07 FABRICATION

General: Factory fabricate automatic entrance components to designs, sizes, and thicknesses indicated and to comply with indicated standards.

Form aluminum shapes before finishing.

1. Weld in concealed locations to greatest extent possible to minimize distortion or discoloration of finish. Remove weld spatter and welding oxides from exposed surfaces by descaling or grinding.

2. Use concealed fasteners to greatest extent possible. Where exposed fasteners are required, use countersunk Phillips flat-head machine screws[**, finished to match framing**] [**, fabricated from stainless steel**].

   Where fasteners are subject to loosening or turning out from thermal and structural movements, wind loads, or vibration, use self-locking devices.
   a. Reinforce members as required to receive fastener threads.

Where aluminum will contact dissimilar metals, protect against galvanic action by painting contact surfaces with primer or by applying sealant or tape recommended by manufacturer for this purpose.

Framing: Provide automatic entrances as prefabricated assemblies. Complete fabrication, assembly, finishing, hardware application, and other work before shipment to Project site.

Fabricate tubular and channel frame assemblies with welded or mechanical joints. Provide subframes and reinforcement as required for a complete system to support required loads.

3. Perform fabrication operations in manner that prevents damage to exposed finish surfaces.
4. Form profiles that are sharp, straight, and free of defects or deformations.
5. Provide components with concealed fasteners and anchor and connection devices.
6. Fabricate components with accurately fitted joints with ends coped or mitered to produce hairline joints free of burrs and distortion.
7. Fabricate exterior components to drain condensation and water passing joints within system to the exterior.
8. Provide anchorage and alignment brackets for concealed support of assembly from building structure.
9. Allow for thermal expansion of exterior units.

Doors: Factory fabricated and assembled in profiles indicated. Reinforce as required to support imposed loads and for installing hardware.

Door Operators: Factory fabricated and installed in headers, including adjusting and testing.

B. Glazing: Fabricate framing with minimum glazing edge clearances for thickness and type of glazing indicated, according to GANA's "Glazing Manual."

C. Hardware: Factory install hardware to greatest extent possible; remove only as required for final finishing operation and for delivery to and installation at Project site. Cut, drill, and tap for factory-installed hardware before applying finishes.

Provide sliding-type weather stripping, mortised into door, at perimeter of doors[and breakaway sidelites].

Controls:

General: Factory install activation and safety devices in doors and headers as required by BHMA A156.10 for type of door and direction of travel.

1. Install photoelectric beams in vertical jambs of sidelites, with dimension above finished floor as follows:

   Top Beam: [48 inches] <Insert dimension>.
   a. Bottom Beam: [24 inches] <Insert dimension>.

2.08 GENERAL FINISH REQUIREMENTS

Protect mechanical finishes on exposed surfaces from damage by applying a strippable, temporary protective covering before shipping.

A. Apply organic and anodic finishes to formed metal after fabrication unless otherwise indicated.

B. Appearance of Finished Work: Noticeable variations in same piece are not acceptable. Variations in appearance of adjoining components are acceptable if they are within the range of approved Samples and are assembled or installed to minimize contrast.

2.09 ALUMINUM FINISHES

High-Performance Organic Finish: Two-coat fluoropolymer finish complying with [AAMA 2604] [AAMA 2605] and containing not less than [50] [70] percent PVDF resin by weight in color coat. Prepare, pretreat, and apply coating to exposed metal surfaces to comply with coating and resin manufacturers' written instructions.

PART 3 - EXECUTION

3.01 EXAMINATION

Examine conditions, with Installer present, for compliance with requirements for installation tolerances, header support, and other conditions affecting performance of automatic entrances.

A. Examine roughing-in for electrical systems to verify actual locations of power connections before automatic entrance installation.

B. Proceed with installation only after unsatisfactory conditions have been corrected.

3.02 INSTALLATION

General: Install automatic entrances according to manufacturer's written instructions and cited BHMA standard for direction of pedestrian travel, including signage, controls, wiring, and connection to the building's power supply.

Do not install damaged components. Fit frame joints to produce hairline joints free of burrs and distortion. Rigidly secure nonmovement joints. Seal joints watertight.

1. Where aluminum will contact dissimilar metals, protect against galvanic action by painting contact surfaces with primer or by applying sealant or tape recommended by manufacturer for this purpose.
2. Where aluminum will contact concrete or masonry, protect against corrosion by painting contact surfaces with bituminous coating.

Entrances: Install automatic entrances plumb and true in alignment with established lines and grades without warp or rack of framing members and doors. Anchor securely in place.

Install surface-mounted hardware using concealed fasteners to greatest extent possible.

3. Set headers, carrier assemblies, tracks, operating brackets, and guides level and true to location with anchorage for permanent support.

4. Install components to drain water passing joints, condensation occurring within framing members, and moisture migrating within system to exterior.
5. Level recesses for recessed thresholds using nonshrink grout.

Door Operators: Connect door operators to electrical power distribution system.

B. Access-Control Devices: Connect access-control devices to access-control system as specified in Section 28 13 00 "Access Control."

C. Controls: Install and adjust activation and safety devices according to manufacturer's written instructions and cited BHMA standard for direction of pedestrian travel. Connect control wiring according to Section 26 05 19 "Low-Voltage Electrical Power Conductors and Cables."

D. Glazing: Install glazing as specified in [Section 08 80 00 "Glazing."] [Section 08 88 53 "Security Glazing."]

E. Sealants: Comply with requirements specified in Section 07 92 00 "Joint Sealants" to provide weathertight installation.

Set thresholds, bottom-guide-track system, framing members and flashings in full sealant bed.
1. Seal perimeter of framing members with sealant.

Signage: Apply signage on both sides of each door[and breakaway sidelite] as required by cited BHMA standard for direction of pedestrian travel.

F. Wiring within Automatic Entrance Enclosures: Bundle, lace, and train conductors to terminal points with no excess and without exceeding manufacturer's written limitations on bending radii. Provide and use lacing bars and distribution spools.

3.03 ADJUSTING

Adjust hardware, moving parts, door operators, and controls to function smoothly, and lubricate as recommended by manufacturer; comply with requirements of applicable BHMA standards.

Adjust exterior doors for weathertight closure.

Readjust door operators and controls after repeated operation of completed installation equivalent to three days' use by normal traffic (100 to 300 cycles).

A. Occupancy Adjustments: When requested within [**12**] <**Insert number**> months of date of Substantial Completion, provide on-site assistance in adjusting system to suit actual occupied conditions. Provide up to [**two**] <**Insert number**> visits to Project during other-than-normal occupancy hours for this purpose.

3.04 CLEANING

Clean glass and metal surfaces promptly after installation. Remove excess glazing and sealant compounds, dirt, and other substances. Repair damaged finish to match original finish.

Comply with requirements in [**Section 08 80 00 "Glazing"**] [**Section 08 88 53 "Security Glazing"**] for cleaning and maintaining glass.

3.05 MAINTENANCE SERVICE

Initial Maintenance Service: Beginning at Substantial Completion, maintenance service shall include [**three**] [**six**] [**nine**] [**12**] months' full maintenance by skilled employees of automatic entrance Installer. Include [**monthly**] [**quarterly**] preventive maintenance, repair or replacement of worn or defective components, lubrication, cleaning, and adjusting as required for proper automatic entrance operation. Parts and supplies shall be manufacturer's authorized replacement parts and supplies.

Engage a Certified Inspector to perform safety inspection after each adjustment or repair and at end of maintenance period. Furnish completed inspection reports to Owner.

1. Perform maintenance, including emergency callback service, during normal working hours.
2. Include 24-hour-per-day, 7-day-per-week, emergency callback service.

3.06 DEMONSTRATION

Engage a factory-authorized service representative to train Owner's maintenance personnel to adjust, operate, and maintain automatic entrances.

END OF SECTION

SECTION 08331
OVERHEAD COILING DOORS AND GRILLES

PART 1 GENERAL

1.01 SECTION INCLUDES

A. Steel Rolling Overhead Doors; nonrated, manual operating hardware.
B. Rolling Grill Doors, nonrated, manual operating hardware.

1.02 RELATED SECTIONS

A. Section 08700 - Door Hardware: Cylinder core and keys.
B. Section 09900 - Painting: Field paint finish.

1.03 REFERENCES

A. ASTM A480/A480M - Flat Rolled Stainless Heat Resisting Steel Plate, Sheet, and Strip.
B. ASTM A525/A525M - Steel Sheet, Zinc-coated (Galvanized) by the Hot-Dip Process.
C. ASTM A526/A526M - Steel Sheet, Zinc-coated (Galvanized) by the Hot-dip Process, Commercial Quality.
D. ASTM B221/A221M - Aluminum and Aluminum-Alloy Extruded Bars, Rods, Wire, Shapes, and Tubes.
E. NEMA 250 - Enclosures for Electrical Equipment (1000 Volts Maximum).
F. NEMA ICS 2 - Standards for Industrial Control Devices, Controllers and Assemblies.
G. NEMA MG1 - Motors and Generators.
H. UL - Fire Resistance Directory.
I. UL 325 - Door, Drapery, Gate, Louver, and Window Operators and Systems.

1.04 SYSTEM DESCRIPTION

A. Push up type steel rolling service door. Face mounted; spring counterbalanced.

1.05 SUBMITTALS FOR REVIEW

A. Section 01300 - Submittals: Procedures for submittals.
B. Product Data: Provide general construction, component connections and details.
C. Shop Drawings: Indicate pertinent dimensioning, anchorage methods, hardware locations, and installation details.
D. Samples: Submit two shutter slats, 6” x slat inch in size illustrating shape, color and finish texture.

1.06 SUBMITTALS FOR INFORMATION

A. Section 01300 - Submittals: Procedures for submittals.
B. Manufacturer's Instructions: Indicate installation sequence and procedures, adjustment and alignment procedures.
C. Maintenance Data: Indicate lubrication requirements and frequency, periodic adjustments required.

1.09 REGULATORY REQUIREMENTS

A. Conform to applicable code ..

B. Provide certificate of compliance from authority having jurisdiction indicating approval of coiling door and operating hardware assembly.

PART 2 PRODUCTS

2.01 MANUFACTURERS

A. Manufacturers:
1. Raynor Garage Doors
2. Atlas Door Corporation.
3. The Cookson Company.
4. Mahon Rolling Door Division, RCM Corp.
5. Overhead Door Corporation
6. Southwestern Steel Rolling Door Company

B. **Rolling Service Doors** (Manual Operation) shall be equal to Series FF; flat slat ; 22gauge door as manufactured by Raynor Garage Doors. Size of Door openings as indicated on the door schedule.

C. **Commercial Rolling Grille Door** (Manual Operation) shall be equal to DuraGrille STANDARD, as manufactured by Raynor Garage Doors. Size of grille as indicated on drawings.

2.02 MATERIALS

A. Steel Rolling Service Door:
1. Slats: To be steel, gauge as indicated, in continuous lenghts, interlocked to form the curtain.
2. Windlocks: Provide windlocks as required for door size.
3. Guides and Trim: To be structural steel, in continuous lengths, minimum 3/16" thickness.
4. Curtain Bottom: Reinforced with 2 steel angles 1 1/2" x 1 1/2" x 1/8" minimum. Supply bottom single contact type bottom astragal weatherstripping extended into guides.
5. Bottom Bar: Provide galvanized bottom bar.
6. Hood: Rolled formed, primed painted, 20 gauge steel.
7. Finishes: Primed steel to be field painted.
8. Locking mechanism: Door is to be locked from the exterior side in both fully open and closed positions. Provide lift handle on the exterior side of the door.

B. Rolling Service Grille

1. Grille Pattern: Straight or brick.
2. Material: Aluminum
3. Bottom Bar: Extruded Aluminum
4. Color Finish: Anodized, to be seleced by architect
5. Guides: Face or jamb mounting, see drawings.
6. Locking mechanism: Cylinder Lock

PART 3 EXECUTION

3.01 EXAMINATION

A. Verify existing conditions before starting work.
B. Verify that opening sizes, tolerances and conditions are acceptable.

3.02 INSTALLATION

A. Install door unit assembly in accordance with manufacturer's instructions.
B. Use anchorage devices to securely fasten assembly to wall construction and building framing without distortion or stress.
C. Securely and rigidly brace components suspended from structure. Secure guides to structural members only.
D. Fit and align assembly including hardware; level and plumb, to provide smooth operation.
E NOT USED
F. Coordinate installation of sealants and backing materials at frame perimeter as specified in Section 07900.
G. Install perimeter trim and closures.

3.03 ERECTION TOLERANCES

A. Maintain dimensional tolerances and alignment with adjacent work.
B. Maximum Variation From Plumb: 1/16 inch.
C. Maximum Variation From Level: 1/16 inch.
D. Longitudinal or Diagonal Warp: Plus or minus 1/8 inch per 10 ft straight edge.

3.04 ADJUSTING

A. Adjust door hardware and operating assemblies for smooth and noiseless operation.

3.05 CLEANING

A. Section 01700 - Contract Closeout: Cleaning installed work.
B. Clean door and shutter and components.
C. Remove labels and visible markings.

3.06 SCHEDULE

A. Provide Rolling doors for the following opening sizes; refer to plans for locations:
1. Garbage Dump Room
2. Bicycle Storage
3. Ticket Office
4. See drawings.

END OF SECTION

SECTION 08410
ALUMINUM STOREFRONTS

PART 1 GENERAL

1.01 SECTION INCLUDES

A. Aluminum frames at Retail/ Garage building.
B. Perimeter sealant.

1.04 RELATED SECTIONS

A. Section 07900 - Sealants: System perimeter sealant and back-up materials.
B. Section 08800 - Glazing.

1.05 REFERENCES

A. AAMA - Metal Curtain Wall, Window, Store Front and Entrance - Guide Specifications Manual.
B. AAMA - Curtain Wall Manual #10 - Care and Handling of Architectural Aluminum From Shop to Site.
C. AAMA 603.8 - Performance Requirements and Test Procedures for Pigmented Organic Coatings on Extruded Aluminum.
D. AAMA 606.1 - Specifications and Inspection Methods for Integral Color Anodic Finishes for Architectural Aluminum.
E. AAMA SFM-1 - Aluminum Storefront and Entrance Manual.
F. ANSI A117.1 - Safety Standards for the Handicapped.

1.06 SYSTEM DESCRIPTION

A. Aluminum storefront system that provides for flush glazing on all sides without projecting stops, with glass in the center of the frame.

1.07 PERFORMANCE REQUIREMENTS

A. Limit mullion deflection to flexure limit of glass; with full recovery of glazing materials.
B. System to accommodate, without damage to components or deterioration of seals, movement within system, movement between system and peripheral construction, dynamic loading and release of loads, deflection of structural support framing.
C. System to provide for expansion and contraction within system components caused by a cycling temperature range of 170 degrees F 95 degrees C over a 12 hour period without causing detrimental affect to system components.

1.08 SUBMITTALS

A. Submit under provisions of Section 01300.
B. Shop Drawings: Indicate system dimensions, framed opening requirements and tolerances, affected related Work and expansion and contraction joint location and details.

C. Product Data: Provide component dimensions, describe components within assembly, anchorage and fasteners, glass and infill.
D. Submit two samples illustrating pre-finished aluminum surface, glass, glazing materials.
E. Manufacturer's Certificate: Certify that Products meet or exceed specified requirements.

1.09 QUALITY ASSURANCE

A. Perform Work in accordance with AAMA SFM-1 and AAMA - Metal Curtain Wall, Window, Store Front and Entrance - Guide Specifications Manual.

1.10 QUALIFICATIONS

A. Manufacturer and Installer: Company specializing in manufacturing aluminum glazing systems with minimum three years documented experience.

1.11 PRE-INSTALLATION CONFERENCE

A. Convene one week prior to commencing work of this Section, under provisions of Section 01039.

1.12 DELIVERY, STORAGE, AND HANDLING

A. Deliver, store, protect and handle products to site under provisions of Section 01600.
B. Protect pre-finished aluminum surfaces with wrapping. Do not use adhesive papers or sprayed coatings which bond when exposed to sunlight or weather.

1.14 FIELD MEASUREMENTS

A. Verify that field measurements are as indicated on shop drawings.

1.15 COORDINATION

A. Coordinate Work under provisions of Section 01039.

1.16 WARRANTY

A. Provide three year warranty under provisions of Section 01700.
B. Warranty: Include coverage for complete system for failure to meet specified requirements.

PART 2 PRODUCTS

2.01 MANUFACTURERS

A. Kawneer Company, Inc.; Tri-Fab VG 451
B. Substitutuions of equals will be accepted; subject to approval.

2.02 MATERIALS

A. Extruded Aluminum: ANSI/ASTM B221; 6063 alloy, T5 temper.

2.03 COMPONENTS

A. Frame: 4-1/2” x 2” nominal dimension; screw spline assembled; glazing stops; internal weep drainage system. Provide 4-1/2” x 4” sill frame where storefront rests on finished slab.
B. Sealant and Backing materials as specified in section 07900.
C. Fasteners: aluminum.
D. Glass and Glazing materials: Glazing to be as specified in section 08800. Glass to be set with glazing gaskets consisting of elastomeric material and lock seculey into the glazing reglet to prevent glazing gaskets from disengaging. Vinyl gaskets are not acceptable.

2.04 FINISHES

A. Aluminum profiles shall be given a caustic etch followed by an aodic oxide treatment to obtain a flouropolymer paint coating conforming to the requirements of AAMA 605.2-92. Color: Light Bronze.

2.05 FABRICATION

A. Fabricate components with minimum clearances and shim spacing around perimeter of assembly, yet enabling installation and dynamic movement of perimeter seal.
B. Accurately fit and secure joints and corners. Make joints flush, hairline.
C. Prepare components to receive anchor devices. Fabricate anchors.
D. Arrange fasteners and attachments to conceal from view.
E. Reinforce framing members for imposed loads.

PART 3 EXECUTION

3.01 EXAMINATION

A. Verify dimensions, tolerances, and method of attachment with other work.
B. Verify wall openings and adjoining air and vapor seal materials are ready to receive work of this Section.

3.02 INSTALLATION

A. Install wall system in accordance with manufacturer's instructions and AAMA - Metal Curtain Wall, Window, Store Front and Entrance - Guide Specifications Manual.
B. Attach to structure to permit sufficient adjustment to accommodate construction tolerances and other irregularities.
C. Provide alignment attachments and shims to permanently fasten system to building structure.
D. Align assembly plumb and level, free of warp or twist. Maintain assembly dimensional tolerances, aligning with adjacent work.
E. Install glass in accordance with Section 08800, to glazing method required to achieve performance criteria.

3.03 TOLERANCES

A. Maximum Variation from Plumb: 0.06 inches every 3 ft non-cumulative or 1/16 inches per 10 ft, whichever is less.
B. Maximum Misalignment of Two Adjoining Members Abutting in Plane: 1/32 inch.

3.04 ADJUSTING

A. Adjust work under provisions of Section.

3.05 CLEANING

A. Clean work under provisions of 01700.

B. Remove protective material from pre-finished aluminum surfaces.

C. Wash down surfaces with a solution of mild detergent in warm water, applied with soft, clean wiping cloths. Take care to remove dirt from corners. Wipe surfaces clean.
D. Remove excess sealant by method acceptable to sealant manufacturer.

3.06 PROTECTION OF FINISHED WORK

A. Protect finished Work under provisions of Section 01500.
B. Protect finished Work from damage.

END OF SECTION

SECTION 08413
GLAZED ALUMINUM CURTAIN WALLS

PART 1 – GENERAL

1.01 SUMMARY

A. Section includes conventionally glazed aluminum curtain walls installed as stick assemblies.

1.02 PERFORMANCE REQUIREMENTS

A. General Performance: Comply with performance requirements specified, as determined by testing of manufacturer's standard glazed aluminum curtain walls representing those indicated for this Project without failure due to defective manufacture, fabrication, installation, or other defects in construction.

1. Glazed aluminum curtain walls shall withstand movements of supporting structure including, but not limited to, story drift, twist, column shortening, long-term creep, and deflection from uniformly distributed and concentrated live loads.

2. Failure also includes the following:

a. Thermal stresses transferring to building structure.
b. Glass breakage.
c. Noise or vibration created by wind and thermal and structural movements.
d. Loosening or weakening of fasteners, attachments, and other components.
e. Failure of operating units.

B. Delegated Design: Design glazed aluminum curtain walls, including comprehensive engineering analysis by a qualified professional engineer, using performance requirements and design criteria indicated.

C. Wind Loads: As indicated on Structural Drawings.

D. Structural-Test Performance: Test according to ASTM E 330 as follows:

1. When tested at 150 percent of positive and negative wind-load design pressures, assemblies, including anchorage, do not evidence material failures, structural distress, and permanent deformation of main framing members exceeding 0.2 percent of span.

2. Test Durations: 10 seconds.

E. Deflection of Framing Members: At design wind pressure, as follows:

1. Deflection Normal to Wall Plane: Limited to edge of glass in a direction perpendicular to glass plane not exceeding L/175 of the glass edge length for each individual glazing lite or an amount that restricts edge deflection of individual glazing lites to 3/4 inch, whichever is less.
2. Deflection Parallel to Glazing Plane: Limited to amount not exceeding that which reduces glazing bite to less than 75 percent of design dimension and that which reduces edge clearance between framing members and glazing or other fixed components to less than 1/8 inch.

F. Water Penetration under Static Pressure: No evidence of water penetration through fixed glazing and framing areas when tested according to ASTM E 331 at a minimum static-air-pressure differential of 20 percent of positive wind-load design pressure, but not less than 12.00 lbf/sq. ft.

G. Air Infiltration: Maximum air leakage through fixed glazing and framing areas of 0.30 cfm/sq. ft. of fixed

wall area as determined according to ASTM E 283 at a minimum static-air-pressure differential of 6.24 lbf/sq. ft.

1.03 SUBMITTALS

A. Product Data: For each type of product indicated.

B. Shop Drawings: For glazed aluminum curtain walls. Include plans, elevations, sections, full-size details, and attachments to other work.

1. Include details of provisions for assembly expansion and contraction and for draining moisture occurring within the assembly to the exterior.
2. Include full-size isometric details of each vertical-to-horizontal intersection of glazed aluminum curtain walls, showing the following:

a. Joinery, including concealed welds.
b. Anchorage.
c. Expansion provisions.
d. Glazing.
e. Flashing and drainage.

C. Samples: For each type of exposed finish required.

D. Delegated-Design Submittal: For glazed aluminum curtain walls indicated to comply with performance requirements and design criteria, including analysis data signed and sealed by the qualified professional engineer responsible for their preparation.

E. Energy Performance Certificates: For glazed aluminum curtain walls, accessories, and components, from manufacturer.

1. Basis for Certification: NFRC-certified energy performance values for each glazed aluminum curtain wall.

F. Field quality-control reports.

G. Maintenance data.

H. Warranties: Sample of special warranties.

1.04 QUALITY ASSURANCE

A. Installer Qualifications: Manufacturer's authorized representative who is trained and approved for installation of units required for this Project.

B. Product Options: Information on Drawings and in Specifications establishes requirements for aesthetic effects and performance characteristics of assemblies. Aesthetic effects are indicated by dimensions, arrangements, alignment, and profiles of components and assemblies as they relate to sightlines, to one another, and to adjoining construction.

C. Energy Performance Standards: Comply with NFRC for minimum standards of energy performance, materials, components, accessories, and fabrication. Comply with more stringent requirements if indicated.

1. Provide NFRC-certified glazed aluminum curtain walls with an attached label.

D. Preinstallation Conference: Conduct conference at Project site.

1.05 WARRANTY

A. Special Assembly Warranty: Standard form in which Installer agrees to repair or replace components of glazed aluminum curtain walls that do not comply with requirements or that fail in materials or workmanship within specified warranty period.

1. Warranty Period: Five years from date of Substantial Completion.

PART 2 – PRODUCTS

2.01 MANUFACTURERS

A. Basis-of-Design Product: Design is based on Kawneer North America 1600 Wall Subject to compliance with requirements, provide named product or comparable product approved by the Architect by one of the following:

1. Arch Aluminum & Glass Co., Inc.
2. Vistawall Architectural Products; The Vistawall Group; a Bluescope Steel company.
3. YKK AP America Inc.

2.02 MATERIALS

A. Aluminum: Alloy and temper recommended by manufacturer for type of use and finish indicated.

1. Sheet and Plate: ASTM B 209.
2. Extruded Bars, Rods, Profiles, and Tubes: ASTM B 221.

3. Extruded Structural Pipe and Tubes: ASTM B 429.
4. Structural Profiles: ASTM B 308/B 308M.
5. Welding Rods and Bare Electrodes: AWS A5.10/A5.10M.

B. Steel Reinforcement: With manufacturer's standard zinc-rich, corrosion-resistant primer complying with SSPC-PS Guide No. 12.00; applied immediately after surface preparation and pretreatment. Select surface preparation methods according to recommendations in SSPC-SP COM and prepare surfaces according to applicable SSPC standard.

1. Structural Shapes, Plates, and Bars: ASTM A 36/A 36M.
2. Cold-Rolled Sheet and Strip: ASTM A 1008/A 1008M.
3. Hot-Rolled Sheet and Strip: ASTM A 1011/A 1011M.

2.03 FRAMING

A. Framing Members: Manufacturer's standard extruded- or formed-aluminum framing members of thickness required and reinforced as required to support imposed loads.

1. Construction: Thermally broken.
2. Glazing System: Retained mechanically with gaskets on four sides.
3. Glazing Plane: Front.

B. Brackets and Reinforcements: Manufacturer's standard high-strength aluminum

with nonstaining, nonferrous shims for aligning system components.

C. Fasteners and Accessories: Manufacturer's standard corrosion-resistant,nonstaining, nonbleeding fasteners and accessories compatible with adjacent materials.

1. Use self-locking devices where fasteners are subject to loosening or turning out from thermal and structural movements, wind loads, or vibration.
2. Reinforce members as required to receive fastener threads.
3. Use exposed fasteners with countersunk Phillips screw heads, fabricated from 300 series stainless steel.
4. Provide all aluminum accessory items for a complete installation including interior sill extensions. Refer to Drawings for shapes.

D. Anchors: Three-way adjustable anchors with minimum adjustment of 1 inch that accommodate fabrication and installation tolerances in material and finish compatible with adjoining materials and recommended by manufacturer.

E. Concealed Flashing: Dead-soft, 0.018-inch- thick stainless steel, ASTM A 240/A 240M of type recommended by manufacturer.

F. Framing Sealants: Manufacturer's standard sealants.

2.04 GLAZING

A. Glazing: Comply with Division 08 Section “Glazing.”
B. Glazing Gaskets: Manufacturer's standard sealed-corner pressure-glazing system of black, resilient elastomeric glazing gaskets, setting blocks, and shims or spacers.
C. Glazing Sealants: As recommended by manufacturer.

2.05 ACCESSORY MATERIALS

A. Bituminous Paint: Cold-applied asphalt-mastic paint complying with SSPCPaint 12 requirements except containing no asbestos, formulated for 30-mil thickness per coat.

2.06 FABRICATION

A. Form or extrude aluminum shapes before finishing.
B. Weld in concealed locations to greatest extent possible to minimize distortion or discoloration of finish. Remove weld spatter and welding oxides from exposed surfaces by descaling or grinding.
C. Fabricate components that, when assembled, have the following characteristics:

1. Profiles that are sharp, straight, and free of defects or deformations.
2. Accurately fitted joints with ends coped or mitered.
3. Physical and thermal isolation of glazing from framing members.
4. Accommodations for thermal and mechanical movements of glazing and framing to maintain required glazing edge clearances.
5. Provisions for field replacement of glazing from interior.
6. Fasteners, anchors, and connection devices that are concealed from view to greatest extent possible.

D. Fabricate components that, when assembled, have the following characteristics:

1. Internal guttering system or other means to drain water passing joints, condensation occurring within framing members, and moisture migrating within glazed aluminum curtain wall to exterior.
2. Pressure-equalized system or double barrier design with primary air and vapor barrier at interior side of glazed aluminum curtain wall and secondary seal weeped and vented to exterior.

E. After fabrication, clearly mark components to identify their locations in Project

according to Shop Drawings.

2.07 ALUMINUM FINISHES

A. “Light Bronze” #26 Anodic Finish: AAMA 611, AA-M10C212A41, Class I, 0.018 mm or thicker.

PART 3 – EXECUTION

3.01 INSTALLATION

A. General:

1. Comply with manufacturer's written instructions.
2. Do not install damaged components.
3. Fit joints to produce hairline joints free of burrs and distortion.
4. Rigidly secure nonmovement joints.
5. Install anchors with separators and isolators to prevent metal corrosion and electrolytic deterioration and to prevent impeding movement of moving joints.
6. Weld components in concealed locations to minimize distortion or discoloration of finish. Protect glazing surfaces from welding.
7. Seal joints watertight unless otherwise indicated.

B. Metal Protection:

1. Where aluminum will contact dissimilar metals, protect against galvanic action by painting contact surfaces with primer or by applying sealant or tape or installing nonconductive spacers as recommended by manufacturer for this purpose.
2. Where aluminum will contact concrete or masonry, protect against corrosion by painting contact surfaces with bituminous paint.

C. Install components to drain water passing joints, condensation occurring within framing members, and moisture migrating within glazed aluminum curtain wall to exterior.

D. Install components plumb and true in alignment with established lines and grades.
E. Install glazing as specified in Division 08 Section “Glazing.”

3.02 ERECTION TOLERANCES

A. Erection Tolerances: Install glazed aluminum curtain walls to comply with the following maximum tolerances:

1. Plumb: 1/8 inch in 10 feet; 1/4 inch in 40 feet.
2. Level: 1/8 inch in 20 feet; 1/4 inch in 40 feet.
3. Alignment:
    a. Where surfaces abut in line or are separated by reveal or protruding element up to 1/2 inch wide, limit offset from true alignment to 1/16 inch.
    b. Where surfaces are separated by reveal or protruding element from 1/2 to 1 inch wide, limit offset from true alignment to 1/8 inch.
    c. Where surfaces are separated by reveal or protruding element of 1 inch wide or more, limit offset from true alignment to 1/4 inch.
4. Location: Limit variation from plane to 1/8 inch in 12 feet; 1/2 inch over total length.

3.03 FIELD QUALITY CONTROL

A. Testing Agency: Owner will engage a qualified testing agency to perform tests

and inspections.

B. Testing Services: Testing and inspecting of representative areas of glazed aluminum curtain walls shall take place as installation proceeds to determine compliance of installed assemblies with specified requirements.

1. Air Infiltration: Areas shall be tested for air leakage of 1.5 times the rate specified for laboratory testing in “Performance Requirements” Article, but not more than 0.50 cfm/sq. ft., of fixed wall area when tested according to ASTM E 783 at a minimum static-air-pressure differential of 6.24 lbf/sq. ft.

a. Perform a minimum of three tests in areas as directed by Architect.

2. Water Penetration: Areas shall be tested according to ASTM E 1105 at a minimum uniform and cyclic static-air-pressure differential of 0.67 times the static-air-pressure differential specified for laboratory testing in “Performance Requirements” Article, but not less than 6.24 lbf/sq. ft., and shall not evidence water penetration.

a. Perform a minimum of three tests in areas as directed by Architect.

3. Glazed aluminum curtain walls will be considered defective if they do not pass tests and inspections.

END OF SECTION

SECTION 08800
GLAZING

PART 1 GENERAL

1.01 SECTION INCLUDES

A. Glass and glazing for sections referencing this section for Products and installation.

1.02 PERFORMANCE REQUIREMENTS

A. Flat Glass Marketing Association "Glazing Manual"
B. Safety Standard for Architectural Glazing Materials Federal Standard 16 CFR 1201

1.03 SUBMITTALS FOR REVIEW

A. Manufacturer's product information for Tempred Glass Panels.
B. Certificate that products meet or exceed specific requirements.

1.04 WARRANTY

A. UL Fire Rated Laboratory Certificate
B. Warranties shall be in addition to, and not a limitation of, other rights the owner may have under the contract documents.
C. Manufacturers Product Warranty on Insulating Glass: Provide written warranty signed by manufacturer of insulating glass agreeing to furnish f.o.b. point of manufacture, freight allowed project site, within specified warranty period indicated below, replacements for those insulating glass units developing manufacturer defects. Manf. defects are faliure or hermatic seal of air space (beyond that due to glass breakage) as evidence by intrusion of dirt or moisture, internal condensation or fogging, deterioration of protected internal glass coatings(if any), and other indications of seal faliure or performance; provided the manufacturers instructions for handling, installing, protecting, and maintaining units have been complied with during the warranty period.
D. Warranty Period: Manufacturers Standard but not less than 10 years.

PART 2 PRODUCTS

2.01 FLAT GLASS MATERIALS

A. Tempered and Heat-Strengthened Class: Fed. Spec. DD-C-1403
B. Float Glass: Fed. Spec. DD-G-451; Type I, transparent,flat, Class I, Quality q3.
C. Solar Green 1/4” thick solar glass.
D. Safety requirements: provide heat treated (tempered) panes where indicated, recommended by manufacturer, and required by code.

2.02 SEALED INSULATING GLASS UNITS:

A. Thickness at exterior storefront: 1" (2 sheets of 1/4" glass and 1/2" air space)
B. Thickness at exterior fixed HM windows: 1” (2 sheets of 1/4” glass and 1/2” air space)
C. Performance and Characteristics: Hermetically sealed complying with ATSM E 774, class A . Spacer material, sealing system, and corner construction to be anufacturer's standard.
D. Color: **Where indicated tinted: Clear inner pane and Solar Green outer pane.**
E. Safety requirements: provide heat treated (tempered) panes where indicated, recommended by manufacturer, and required by code.

2.03 SEALANTS AND GLAZING TAPES:

A. Compatibility: sealants and glazing tapes are to be compatible with other materials which they are to come in contact. Comply with manf. recommendations.
B. Characteristics: Comply with ASTM C 920 for type, grade, class, and uses. Color to be clear.

2.04 GLAZING GASKETS

A. Lock strip gaskets: Neoprene extrusions. Complt with ASTM C 542. Color - black.
B. Dense Elastomeric Compression Seal Gaskets: Comply with ASTM C 864, Acceptable materials are: Neoprene, EPDM, Thermoplastic Polyolefin Rubber.
C. Cellular Elastomeric Gasket: Comply with ASTM C 509.

2.05 MISC. GLAZING MATERIALS:

A. Cleaners, Primers, and Sealers: as recommended by sealer or gasket manf.
B. Setting Blocks: Neoprene, EPDM, or Silicone
C. Spacers: Neoprene, EPDM, or silicone blocks or continuouse extrusions.
D. Edge Blocks: Neoprene, EPDM, or SIlicone.
E. Compressible filler Rods: Closed cell or waterproof-jacketed. 5 - 10 psi compression strength for 25% deflection.

2.06 SOURCE QUALITY CONTROL AND TESTS
A. Provide testing of glass to Section 01400.

PART 3 EXECUTION

3.01 EXAMINATION

A. Section 01039 - Coordination and Meetings: Verification of existing conditions before starting work.
B. Verify that openings for glazing are correctly sized and within tolerance.
C. Verify that surfaces of glazing channels or recesses are clean, free of obstructions that may impede moisture movement, weeps are clear, and ready to receive glazing.

3.02 PREPARATION

A. Clean contact surfaces with solvent and wipe dry.
B. Seal porous glazing channels or recesses with substrate compatible primer or sealer.
C. Prime surfaces scheduled to receive sealant.
D. Perform installation in accordance with ASTM C804 for solvent release sealants.

3.03 CLEANING

A. Section 01700 - Contract Closeout: Cleaning installed work.
B. Remove glazing materials from finish surfaces.
C. Remove labels after Work is complete.
D. Clean glass and adjacent surfaces.

3.04 PROTECTION OF FINISHED WORK

A. Section 01700 - Contract Closeout: Protecting installed work.

B. After installation, mark pane with an 'X' by using removable plastic tape or paste.

3.05 SCHEDULE

A. Storefront glazing: 1” double insulated; tempered.

END OF SECTION

SECTION 09013

CERAMIC TILING

PART 1 - GENERAL

1.01 RELATED DOCUMENTS

Drawings and general provisions of the Contract, including General and Supplementary Conditions and Division 01 Specification Sections, apply to this Section.

1.02 SUMMARY

Section Includes:

Metal edge strips.

Related Requirements:

Section 09220 "Gypsum Board" for cementitious backer units.

1.03 DEFINITIONS

General: Definitions in the ANSI A108 series of tile installation standards and in ANSI A137.1 apply to Work of this Section unless otherwise specified.

A. ANSI A108 Series: ANSI A108.01, ANSI A108.02, ANSI A108.1A, ANSI A108.1B, ANSI A108.1C, ANSI A108.4, ANSI A108.5, ANSI A108.6, ANSI A108.8, ANSI A108.9, ANSI A108.10, ANSI A108.11, ANSI A108.12, ANSI A108.13, ANSI A108.14, ANSI A108.15, ANSI A108.16, and ANSI A108.17, which are contained in its "Specifications for Installation of Ceramic Tile."

B. Module Size: Actual tile size plus joint width indicated.

C. Face Size: Actual tile size, excluding spacer lugs.

1.04 PREINSTALLATION MEETINGS

Preinstallation Conference: Conduct conference at [Project site] <Insert location>.

Review requirements in ANSI A108.01 for substrates and for preparation by other trades.

1.05 ACTION SUBMITTALS

Product Data: For each type of product.

A. LEED Submittals:

Product Data for Credit IEQ 4.1: For adhesives, documentation including printed statement of VOC content.

1. Product Data for Credit IEQ 4.3: For grout sealers, documentation indicating that products comply with requirements of FloorScore certification.

B. Samples for Verification:

Full-size units of each type and composition of tile and for each color and finish required.[For ceramic mosaic tile in color blend patterns, provide full sheets of each color blend.]

1. Assembled samples mounted on a rigid panel, with grouted joints, for each type and composition of tile and for each color and finish required. Make samples at least [12 inches square] [36 inches square] <Insert size>, but not fewer than four tiles. Use grout of type and in color or colors approved for completed Work.
2. Full-size units of each type of trim and accessory[for each color and finish required].
3. Stone thresholds in 6-inch lengths.
4. Metal edge strips in 6-inch lengths.

1.06 INFORMATIONAL SUBMITTALS

Product Certificates: For each type of product.

1.07 MAINTENANCE MATERIAL SUBMITTALS

Furnish extra materials that match and are from same production runs as products installed and that are packaged with protective covering for storage and identified with labels describing contents.

Tile and Trim Units:[Furnish quantity of full-size units equal to 3 percent of amount installed for each type, composition, color, pattern, and size indicated.]

<Insert, in separate subparagraphs, tile-type designation or description and quantity required for each category of tile for which extra material is required>.

Grout: Furnish quantity of grout equal to 3 percent of amount installed for each type, composition, and color indicated.

1.08 QUALITY ASSURANCE

Installer Qualifications:

Installer is [a five-star member of the National Tile Contractors Association] [or] [a Trowel of Excellence member of the Tile Contractors' Association of America].

1. Installer's supervisor for Project holds the International Masonry Institute's Foreman Certification.
2. Installer employs [Ceramic Tile Education Foundation Certified Installers] [or] [installers recognized by the U.S. Department of Labor as Journeyman Tile Layers].

1.09 DELIVERY, STORAGE, AND HANDLING

Deliver and store packaged materials in original containers with seals unbroken and labels intact until time of use. Comply with requirements in ANSI A137.1 for labeling tile packages.

A. Store tile and cementitious materials on elevated platforms, under cover, and in a dry location.

B. Store aggregates where grading and other required characteristics can be maintained and contamination can be avoided.

C. Store liquid materials in unopened containers and protected from freezing.

1.10 FIELD CONDITIONS

Environmental Limitations: Do not install tile until construction in spaces is complete and ambient temperature and humidity conditions are maintained at the levels indicated in referenced standards and manufacturer's written instructions.

PART 2 - PRODUCTS

2.01 MANUFACTURERS

Source Limitations for Tile: Obtain [**tile of each type and color or finish**] [**tile of each type**] [**tile of each color or finish**] [**tile**] from single source or producer.

Obtain tile of each type and color or finish from same production run and of consistent quality in appearance and physical properties for each contiguous area.

Source Limitations for Setting and Grouting Materials: Obtain ingredients of a uniform quality for each mortar, adhesive, and grout component from single manufacturer and each aggregate from single source or producer.

Obtain setting and grouting materials, except for unmodified Portland cement and aggregate, from single manufacturer.

1. Obtain [**waterproof membrane**] [**and**] [**crack isolation membrane**], except for sheet products, from manufacturer of setting and grouting materials.

Source Limitations for Other Products: Obtain each of the following products specified in this Section from a single manufacturer:

Stone thresholds.

2. Waterproof membrane.
3. Crack isolation membrane.
4. Cementitious backer units.
5. Metal edge strips.

2.02 PRODUCTS, GENERAL

ANSI Ceramic Tile Standard: Provide tile that complies with ANSI A137.1 for types, compositions, and other characteristics indicated.

Provide tile complying with Standard grade requirements[**unless otherwise indicated**].

ANSI Standards for Tile Installation Materials: Provide materials complying with ANSI A108.02, ANSI standards referenced in other Part 2 articles, ANSI standards referenced by TCNA installation methods specified in tile installation schedules, and other requirements specified.

A. Factory Blending: For tile exhibiting color variations within ranges, blend tile in factory and package so tile units taken from one package show same range in colors as those taken from other packages and match approved Samples.

B. Mounting: For factory-mounted tile, provide back- or edge-mounted tile assemblies as standard with manufacturer unless otherwise indicated.

Where tile is indicated for installation [**in swimming pools**] [**on exteriors**] [**or**] [**in wet areas**], do not use back- or edge-mounted tile assemblies unless tile manufacturer specifies in writing that this type of mounting is suitable for installation indicated and has a record of successful in-service performance.

2.03 SETTING MATERIALS

Latex-Portland Cement Mortar (Thinset): ANSI A118.4.

Manufacturers: Subject to compliance with requirements, [provide products by the following] [provide products by one of the following] [available manufacturers offering products that may be incorporated into the Work include, but are not limited to, the following]:

Provide prepackaged, dry-mortar mix containing dry, redispersible, vinyl acetate or acrylic additive to which only water must be added at Project site.

1. Provide prepackaged, dry-mortar mix combined with [acrylic resin] [or] [styrene-butadiene-rubber] liquid-latex additive at Project site.
2. For wall applications, provide mortar that complies with requirements for nonsagging mortar in addition to the other requirements in ANSI A118.4.

2.04 GROUT MATERIALS

High-Performance Tile Grout: ANSI A118.7.

Polymer Type: Ethylene vinyl acetate or acrylic additive, in dry, redispersible form, prepackaged with other dry ingredients.

1. Polymer Type: [Acrylic resin] [or] [styrene-butadiene rubber] in liquid-latex form for addition to prepackaged dry-grout mix.

2.05 MISCELLANEOUS MATERIALS

Trowelable Underlayments and Patching Compounds: Latex-modified, portland cement-based formulation provided or approved by manufacturer of tile-setting materials for installations indicated.

A. Metal Edge Strips: Angle or L-shaped, height to match tile and setting-bed thickness, metallic or combination of metal and PVC or neoprene base, designed specifically for flooring applications; [half-hard brass] [white zinc alloy] [nickel silver] [stainless-steel, ASTM A 666, 300 Series] exposed-edge material.

Manufacturers: Subject to compliance with requirements, [provide products by the following] [provide products by one of the following] [available manufacturers offering products that may be incorporated into the Work include, but are not limited to, the following]:

B. Grout Sealer: Manufacturer's standard product for sealing grout joints and that does not change color or appearance of grout.

Grout sealers shall comply with requirements of FloorScore certification.

2.06 MIXING MORTARS AND GROUT

Mix mortars and grouts to comply with referenced standards and mortar and grout manufacturers' written instructions.

A. Add materials, water, and additives in accurate proportions.

B. Obtain and use type of mixing equipment, mixer speeds, mixing containers, mixing time, and other procedures to produce mortars and grouts of uniform quality with optimum performance characteristics for installations indicated.

PART 3 - EXECUTION

3.01 EXAMINATION

Examine substrates, areas, and conditions where tile will be installed, with Installer present, for compliance with requirements for installation tolerances and other conditions affecting performance of the Work.

Verify that substrates for setting tile are firm; dry; clean; free of coatings that are incompatible with tile-setting materials, including curing compounds and other substances that contain soap, wax, oil, or silicone; and comply with flatness tolerances required by ANSI A108.01 for installations indicated.

1. Verify that concrete substrates for tile floors installed with [**adhesives**] [**bonded mortar bed**] [**or**] [**thinset mortar**] comply with surface finish requirements in ANSI A108.01 for installations indicated.

   Verify that surfaces that received a steel trowel finish have been mechanically scarified.

   a. Verify that protrusions, bumps, and ridges have been removed by sanding or grinding.

Verify that installation of grounds, anchors, recessed frames, electrical and mechanical units of work, and similar items located in or behind tile has been completed.

2. Verify that joints and cracks in tile substrates are coordinated with tile joint locations; if not coordinated, adjust joint locations in consultation with Architect.

Proceed with installation only after unsatisfactory conditions have been corrected.

3.02 PREPARATION

Fill cracks, holes, and depressions in concrete substrates for tile floors installed with [**adhesives**] [**or**] [**thinset mortar**] with trowelable leveling and patching compound specifically recommended by tile-setting material manufacturer.

A. Where indicated, prepare substrates to receive waterproofing by applying a reinforced mortar bed that complies with ANSI A108.1A and is sloped 1/4 inch per foot toward drains.

B. Blending: For tile exhibiting color variations, verify that tile has been factory blended and packaged so tile units taken from one package show same range of colors as those taken from other packages and match approved Samples. If not factory blended, either return to manufacturer or blend tiles at Project site before installing.

3.03 CERAMIC TILE INSTALLATION

Comply with TCNA's "Handbook for Ceramic, Glass, and Stone Tile Installation" for TCNA installation methods specified in tile installation schedules. Comply with parts of the ANSI A108 series "Specifications for Installation of Ceramic Tile" that are referenced in TCNA installation methods, specified in tile installation schedules, and apply to types of setting and grouting materials used.

For the following installations, follow procedures in the ANSI A108 series of tile installation standards for providing 95 percent mortar coverage:

Exterior tile floors.
a. Tile floors in wet areas.
b. Tile swimming pool decks.
c. Tile floors in laundries.
d. Tile floors consisting of tiles 8 by 8 inches or larger.
e. Tile floors consisting of rib-backed tiles.

Extend tile work into recesses and under or behind equipment and fixtures to form complete covering without interruptions unless otherwise indicated. Terminate work neatly at obstructions, edges, and corners without disrupting pattern or joint alignments.

B. Accurately form intersections and returns. Perform cutting and drilling of tile without marring visible surfaces. Carefully grind cut edges of tile abutting trim, finish, or built-in items for straight aligned joints. Fit tile closely to electrical outlets, piping, fixtures, and other penetrations so plates, collars, or covers overlap tile.

C. Provide manufacturer's standard trim shapes where necessary to eliminate exposed tile edges.

D. Where accent tile differs in thickness from field tile, vary setting-bed thickness so that tiles are flush.

E. Jointing Pattern: Lay tile in grid pattern unless otherwise indicated. Lay out tile work and center tile fields in both directions in each space or on each wall area. Lay out tile work to minimize the use of pieces that are less than half of a tile. Provide uniform joint widths unless otherwise indicated.

For tile mounted in sheets, make joints between tile sheets same width as joints within tile sheets so joints between sheets are not apparent in finished work.
1. Where adjoining tiles on floor, base, walls, or trim are specified or indicated to be same size, align joints.
2. Where tiles are specified or indicated to be whole integer multiples of adjoining tiles on floor, base, walls, or trim, align joints unless otherwise indicated.

Joint Widths: Unless otherwise indicated, install tile with the following joint widths:

Ceramic Mosaic Tile: [1/16 inch] [1/8 inch].
3. Quarry Tile: [1/4 inch] [3/8 inch].
4. Pressed Floor Tile: [1/4 inch] [3/8 inch].
5. Glazed Wall Tile: [1/16 inch] [1/8 inch].

6. Porcelain Tile: [1/4 inch] [3/8 inch].

Lay out tile wainscots to dimensions indicated or to next full tile beyond dimensions indicated.

Metal Edge Strips: Install [**at locations indicated**] [**where exposed edge of tile flooring meets carpet, wood, or other flooring that finishes flush with top of tile**] [**where exposed edge of tile flooring meets carpet, wood, or other flooring that finishes flush with or below top of tile and no threshold is indicated**].

F. Grout Sealer: Apply grout sealer to[**cementitious**] grout joints[**in tile floors**] according to grout-sealer manufacturer's written instructions. As soon as grout sealer has penetrated grout joints, remove excess sealer and sealer from tile faces by wiping with soft cloth.

3.04 ADJUSTING AND CLEANING

Remove and replace tile that is damaged or that does not match adjoining tile. Provide new matching units, installed as specified and in a manner to eliminate evidence of replacement.

A. Cleaning: On completion of placement and grouting, clean all ceramic tile surfaces so they are free of foreign matter.

Remove grout residue from tile as soon as possible.

1. Clean grout smears and haze from tile according to tile and grout manufacturer's written instructions but no sooner than 10 days after installation. Use only cleaners recommended by tile and grout manufacturers and only after determining that cleaners are safe to use by testing on samples of tile and other surfaces to be cleaned. Protect metal surfaces and plumbing fixtures from effects of cleaning. Flush surfaces with clean water before and after cleaning.

3.05 PROTECTION

Protect installed tile work with kraft paper or other heavy covering during construction period to prevent staining, damage, and wear. If recommended by tile manufacturer, apply coat of neutral protective cleaner to completed tile walls and floors.

A. Prohibit foot and wheel traffic from tiled floors for at least seven days after grouting is completed.

B. Before final inspection, remove protective coverings and rinse neutral protective cleaner from tile surfaces.

3.06 INTERIOR CERAMIC TILE INSTALLATION SCHEDULE

Interior Floor Installations, Concrete Subfloor:

Ceramic Tile Installation <Insert designation>: TCNA F113; thinset mortar.

Ceramic Tile Type: <Insert tile-type designation>.

Interior Wall Installations, Wood or Metal Studs or Furring:

Ceramic Tile Installation <Insert designation>: TCNA W243; thinset mortar on gypsum board.

Ceramic Tile Type: <Insert tile-type designation>.

END OF SECTION 09 30 13

SECTION 09220
PORTLAND CEMENT PLASTER

PART 1 GENERAL

1.01 SECTION INCLUDES

A. Metal furring and lathing.
B. Portland cement plaster system.
C. Smooth surface finish.

1.04 REFERENCES

A. ASTM C91 - Masonry Cement.
B. ASTM C150 - Portland Cement.
C. ASTM C206 - Finishing Hydrated Lime.
D. ASTM C897 - Aggregate for Job-Mixed Portland Cement Based Plasters.
E. ASTM C926 - Application of Portland Cement Based Plaster.
F. ASTM E119 - Methods for Fire Tests of Building Construction and Materials.
G. PCA (Portland Cement Association) - Plaster (Stucco) Manual.

1.05 SYSTEM DESCRIPTION

A. 3/4 " portland cement plaster base and finish system on metal lath and vapor barrier over substrate.
B. Fabricate elements to limit finish surface to 1/180 deflection under lateral point load of 100 lbs .

1.06 SUBMITTALS

A. Product Data: Provide data on plaster materials, characteristics and limitations of products specified.
B. Samples: Submit two samples, 4"x 4" inch in size illustrating finish color and texture.

1.07 QUALITY ASSURANCE

A. Perform Work in accordance with ASTM C926. PCA Plaster (Stucco) Manual.
B. Maintain one copy of each document on site.

1.08 QUALIFICATIONS

A. Applicator: Company specializing in performing the work of this section with minimum 5 years experience .

1.09 REGULATORY REQUIREMENTS

A. Conform to ASTM E119 and applicable codes for fire rated assemblies.

1.10 MOCKUP

A. Provide mockup of plaster system with accessories
B. Construct mockup, 4 feet long by 4 feet wide, illustrating surface finish and color.
C. Locate where directed.
D. Mockup may not remain as part of the Work.

1.11 ENVIRONMENTAL REQUIREMENTS

A. Do not apply plaster when substrate or ambient air temperature is less than 50 degrees F (10 degrees C) nor more than 80 degrees F (27 degrees C).
B. Maintain minimum ambient temperature of 50 degrees F (10 degrees C) during installation of plaster and until cured.

PART 2 PRODUCTS

2.01 MANUFACTURERS

A. El Rey Stucco or approved equal. Product : El Rey Plaster Glass single mix.
B. Other Acceptable Maufacturers: Thoro, USG, STO.

2.02 PLASTER BASE MATERIALS

A. Premixed Coat: El Rey Plaster Glass mix
B. Water: Clean, fresh, potable and free of mineral or organic matter which can affect plaster.
C. Plaster Mix Reinforcement: Glass fibers, chopped to 1/2 inch (13 mm) nominal length, alkali resistant as contained in El Rey Plaster Glass Mix.

2.03 PLASTER FINISH MATERIALS

A. Premixed Finishing Coat: El Rey type 1/8" minimum thickness; color as selected by architect.
B. Cement: As specified for plaster base coat 5/8" minimum thickness ,gray color.
C. Lime: As contained in El Rey Plaster Glass Mix.
D. Color Pigment: As Recomended by Manufacturer.
E. Water: Clean, fresh, potable and free of mineral or organic matter which can affect plaster.

2.05 FURRING AND LATHING

A. Metal Lath: ASTM C847; flat diamond self furring mesh, flat rib, 3/8 inch (10 mm) high ; 2.5 lb/sq ft (11 Kg/sq m).
B. Casing Bead: Formed sheet steel ; minimum 26 gage (0.5 mm) thick; depth governed by plaster thickness; maximum possible lengths; expanded metal flanges, with square
C. Corner Bead: Formed sheet steel; minimum 26 gage (0.5 mm) thick; depth governed by plaster thickness; maximum possible lengths; expanded metal flanges, with radiused edge.
D. Base Screed: Formed sheet steel; minimum 26 gage (0.5 mm) thick; depth governed by plaster thickness; maximum possible lengths; expanded metal flanges, with bevelled edge.
E. Corner Mesh: Formed steel , minimum 26 gage (0.5 mm) thick; expanded flanges shaped to permit complete embedding in plaster; minimum 2 inches (50 mm) wide; galvanized finish.
F. Control and Expansion Joint Accessories: Formed steel, minimum 26 gage (0.5 mm) thick; accordion profile, 2 inch (50 mm) expanded metal flanges each side; galvanized finish.
G. Anchorage Methods: Screwed on lath and associated metal accessories rigidly in place. Screws to be 3/16" x 1" length at 6" vertically. Screws to be SHANK screws or equal.
H. Weather Resistive Barrier. 15 lb grade "D"

PART 3 EXECUTION

3.01 EXAMINATION AND PREPARATION

A. Verify all surfaces and site conditions prior to commencing the work.

3.02 INSTALLATION - LATHING MATERIALS

A. Apply one ply of base sheet underlayment over substrate; weather lap edges 4 inches (100 mm) minimum. Fasten in place.
B. Apply self furring reinforcement with self furring ribs perpendicular to supports.
C. Lap ends minimum 11/2 inch (38 mm). Secure end laps with tie wire where they occur between supports.Nest outside ribs of lath together.

3.03 INSTALLATION - ACCESSORIES

A. Place corner bead at external wall corners; fasten at outer edges of lath only.
B. Place strip mesh diagonally at corners of lathed openings. Secure rigidly in place.
D. Place 4 inch (100 mm) wide strips of metal lath centered over junctions of dissimilar backing materials. Secure rigidly in place.
E. Place casing beads at terminations of plaster finish. Butt and align ends. Secure rigidly in place. Caulk the joint continously with clear terpolymer sealant or approved equal.

3.04 CONTROL AND EXPANSION JOINTS

A. Locate exterior control and expansion joints as indicated on the building elevations.
C. Establish expansion joints with double back to back casing beads, set 1/4 inch (6 mm) apart.
D. Establish control joints with specified joint device.
E. Coordinate joint placement with other related work.

3.05 PLASTERING

A. Apply stucco in accordance with ASTM C926 and manufacturer's intructions.
B. Moist cure all coats for 48 hour.
C. After curing dampen base coat prior to applyingfinish coat.
D. Apply finish coat to a consistent and smooth finish. Finish as selected by the architect.
E. Moist cure finish coat for a minimum period of 48 hours.

3.06 TOLERANCES

A. Maximum Variation from True Flatness: 1/8 inch in 10 feet (3 mm in 3 m).

3.07 SCHEDULES

A. All stucco surfaces : 3/4" Stucco over self furring metal lath and vapor barrier on 1/2” plywood sheathing. Refer to drawings for location.

END OF SECTION

SECTION 09260
GYPSUM BOARD SYSTEMS

PART 1 GENERAL

1.01 SECTION INCLUDES

A. Gypsum board.
B. Taped and sanded joint treatment.
C. Exterior Cement Board

1.02 REFERENCES

A. ASTM C36 - Gypsum Wallboard.
B. ASTM C79 - Gypsum Sheathing Board.
C. ASTM C442 - Gypsum Backing Board and Core Board.
D. ASTM C475 - Joint Treatment Materials for Gypsum Wallboard Construction.

1.03 SUBMITTALS

A. Submit under provisions of Section 01300.
B. Product Data: Provide data on metal framing, gypsum board, joint tape.

1.04 QUALITY ASSURANCE

A. Perform Work in accordance with ASTM C840.

1.05 QUALIFICATIONS

A. Applicator: Company specializing in performing the work of this section with minimum 5 years documented experience.

PART 2 PRODUCTS

2.01 GYPSUM BOARD MATERIALS

A. Water Resistant Gypsum Board: 1/2" thick for use as interior sheathing at the tower.
B. Standard Gypsum Board 1/2" thick for ceiling in scheduled spaces.

2.02 CEMENT BOARD MATERIALS

A. Durock exterior cement Board: 1/2 " thick for use as interior and exterior sheathing on metal studs where tile is to be installed.

PART 3 EXECUTION

3.01 EXAMINATION

A. Verify site conditions under provisions of Section 01039.
B. Verify that site conditions are ready to receive work and opening dimensions are as indicated on shop drawings.

3.02 GYPSUM BOARD and CEMENT BOARD INSTALLATION

A. Install in accordance with manufacturer's instructions.
B. Erect single layer in most economical direction, with ends and edges occurring over firm bearing.
C. Erect exterior sheathing horizontally, with edges butted tight and ends occurring over firm bearing.
D. Use screws when fastening to metal furring or framing.

3.03 JOINT TREATMENT

A. Tape, fill, and sand exposed joints, edges, and corners to produce smooth surface ready to receive finishes.
B. Feather coats onto adjoining surfaces so that camber is maximum 1/32 inch.
C. Taping, filling, and sanding is not required at surfaces behind adhesive applied ceramic tile.
D. Tape joints and corners of cementitious backing board.

3.04 TEXTURE FINISH

A. Spray or Roll apply finish texture coating in accordance with manufacturer's instructions at ticket office ceiling. Tower gyp. board to receive stucco finish.
B. Sand Finish Texture at all painted surfaces.

3.05 TOLERANCES

A. Maximum Variation of Finished from True Flatness: 1/8 inch in 10 feet in any direction.

END OF SECTION

SECTION 09510
SUSPENDED ACOUSTICAL CEILINGS

PART 1 GENERAL

1.01 SECTION INCLUDES

A. Suspended metal grid ceiling system and perimeter trim.

B. Acoustical tile.

1.02 REFERENCES

A. ASTM C635 - Metal Suspension Systems for Acoustical Tile and Lay-in Panel Ceilings.

B. ASTM C636 - Installation of Metal Ceiling Suspension Systems for Acoustical Tile and Lay-in Panels.

1.03 SUBMITTALS

A. Submit under provisions of Section 01300.

B. Product Data: Provide data on metal grid system components, acoustical units.

C. Samples: Submit two samples 6"x 6" inch in size illustrating material and finish of acoustical units.

D. Samples: Submit two sample box kits of each type of suspension system proposed.

1.04 QUALIFICATIONS

A. Grid Manufacturer: Company specializing in manufacturing the Products specified in this section with minimum five years documented experience.

B. Acoustical Unit Manufacturer: Company specializing in manufacturing the Products specified in this section with minimum five years documented experience.

C. Acoustical and Grid installer: Company specializing in installations of the systems specified with this section with a minimum of five years documented experience.

1.05 EXTRA MATERIALS

A. Furnish under provisions of Section 01 70 0.

PART 2 PRODUCTS

2.01 ACCEPTABLE MANUFACTURERS

Armstrong
US Gypsum
Celotex
Chicago Metallic

2.02 SUSPENSION SYSTEM MATERIALS

A. ASTM C-635, with at least intermediate duty load rating. Comply with ASTM C-636 for installation. Intermediate duty 2' X 4' grid systems as shown on plans.

2.03 ACOUSTICAL UNIT MATERIALS

A. Acoustical 2' x 2' or 2' x 4' Units - USG vinyl faced tiles at Kitchen and related cooking areas
   1. Color: White
   2. Edge: Square Cut Lay In
   3. Grid: Standard

B. Acoustical 2' x 2' or 2'x 4' Units – USG Millenia Clima Plus.
   1. Color: White
   2. Edge: Square Cut Lay In
   3. Grid: Standard

PART 3 EXECUTION

3.01 EXAMINATION

A. Verify site conditions under provisions of Section 01 03 90.

B. Verify that layout of hangers will not interfere with other work.

3.02 INSTALLATION - LAY-IN GRID SUSPENSION SYSTEM

A. Install suspension system in accordance with ASTM C636 and manufacturer's instructions and as supplemented in this section.

B. Install system in accordance with ASTM E580.

3.03 ERECTION TOLERANCES

A. Maximum Variation from Flat and Level Surface: 1/8 inch in 10 feet.

B. Maximum Variation from Plumb of Grid Members Caused by Eccentric Loads: 2 degrees.

3.04 SCHEDULE

A. Locate tiles as shown on plans.

END OF SECTION

SECTION 09544
Modular Metal Ceiling System

PART 1 GENERAL

1.1 RELATED DOCUMENTS

A. Drawings and general provisions of the Contract, including General and Supplementary Conditions and Division 1 Specification Sections, apply to this Section.

1.2 SUMMARY

A. Section Includes:

1. Perforated metal ceiling panels
2. Acoustical backing.
3. Suspension assemblies
4. Accessories; provide other necessary items including devices for attachment overhead construction, secondary members, splines, splices, connecting clips, wall connectors, wall angles, and other devices required for a complete installation.
5. Supplemental support framing: Provide fully engineered secondary framing as required to meet code, conforming to layout shown in drawings, to support direct-hung metal ceilings suspension system.
6. Coordinate layout and installation of items penetrating or being installed in ceiling systems with responsible trades.

B. Related Sections / Work:

1. Sections 05400 – Metal Stud Framing
2. Sections 09260 – Gypsum Board Systems
3. Sections 09511 – Acoustical Ceilings
4. Sections 09900 – Paintings and Coatings
5. Division 23 – Heating, Ventilating and Air Conditioning
6. Division 26 - Electrical

C. Alternates (Substitutions):

1. Prior approval: unless otherwise provided for in the contract documents, proposed product substitutions may be submitted no later than 10 working days prior to the date established for receipt of bids. Approval of a proposed substitution is contingent upon the Architect's review of the proposal for acceptability. Approved products will be set forth by addenda. If substitute products have not been approved by addenda, but are included in a bid, the specified products shall be provided without additional compensation.
2. Submittals which do not provide adequate data for the product evaluation will not be considered. The proposed substitution must meet the requirements for this section, including but not necessarily limited to the following: single source materials supplier (if specified in Section 1.5); panel design,

size, composition, color and finish; suspension system component profiles and sizes; and compliance with the referenced standards

D. This Section covers the general requirements only for Acoustical Metal Ceilings as shown on the drawings. The supplying and installation of additional accessory feature and other items not specifically mentioned herein, but which are necessary to make a complete installation shall also be included or clarified accordingly.

1.3 REFERENCES

A. American Society for Testing and Materials (ASTM)

1. E 84 – "Standard Test Method for Surface Burning Characteristics of Building Materials"

2. E 488 – "Standard Test Methods for Strength of Anchors in Concrete and Masonry Elements"

3. B 209 – "Standard Specification for Aluminum and Aluminum Alloy Sheet and Plate"

4. C 423 – "Sound Absorption and Sound Absorption Coefficients by Reverberation Room Method"

5. E 580 – "Standard Practice for Application of Ceiling Suspension Systems for Acoustical Tile and Lay-in Panels in Areas Requiring Moderate Seismic Restraint"

6. C 635 – "Standard Specification for Metal Suspension Systems for Acoustical Tile and Lay-in Panel Ceilings"

7. C 636 – "Recommended Practice for Installation of Metal Ceiling Suspensions Systems for Acoustical and Lay-in Panels"

8. A 641 – "Standard Specification for Zinc-Coated (Galvanized) Carbon Steel Wire"

9. A 653 – "Standard Specification for Steel Sheet, Zinc-Coated (Galvanized) or Zinc-Iron Alloy Coated (Galvannealed) by the Hot-Dip process.

10. E 1264 – Classification for Acoustical Ceiling Products"

11. E 1477 – Standard Test Method for Luminous Reflectance factor of Acoustical Materials by use of Integrating-Sphere Reflectometers"

12. D 1044 – Practice for Abrasion Resistance

13. D 1002 – Practice for Adhesion Resistance

B Applicable LEED Environmental Categories and Credits and performance requirements as indicated:

1. Material and Resources (MR)

   a. MR Credit 4.1 & 4.2 – Recycled Content

   b. MR Credit 5.1 & 5.2 – Regional Materials

   c. MR Credit 7.0 – Certified Wood

2. Indoor Environmental Quality (EQ)

   a. EQ Credit 4.1 – Low Emitting Materials, Adhesives & Sealants

   b. EQ Credit 4.1 – Low Emitting Materials, Paints

   c. EQ Credit 4.4 – Low Emitting Materials, Composite Wood & Agrifiber

3. Innovation in Design (IC)

    a. IC Credit 1.1 – Enhanced Acoustical Performance

C. Architectural Woodworking Institute (AWI) and or WIC requirements shall be met for woodworking materials.

D. NEMA Standard 11-14-95 for Chemical Resistance

E. Local Building Code (UBC or IBC), current edition requirements

1.4 SUBMITTALS

A. Product Data: Manufacturers product data for each type of product specified in this section.

B. Product Certification: Manufacturer's certifications that products comply with specified requirements and governing codes including product data, laboratory test reports and research reports showing compliance with specified standards.

C. Shop (Coordination) Drawings: Submit shop drawings for reflected ceiling plans (RCP's), drawn to scale, and coordinating penetrations and ceiling mounted items. Show the following details:

1. Reflected ceiling plan including joint patterns & details.

2. Metal ceiling suspension system plan with appropriate components, suggested hanger locations & details.

3. Method of attaching suspension system hangers to building structure.

4. Ceiling-mounted items including: light fixtures, air outlets and inlets, speakers, sprinklers, and other interfaces.

5. Special moldings at walls, column penetrations, and other junctures of acoustical ceilings with adjoining construction.
6. Framing and support details for work supported by ceiling suspension system.

7. List of materials, dimensions, hanger fastenings and any special details.

8. Minimum drawing scale: 1/8" = 1'-0".

9. Provide full scale drawings of perforation patterns. Provide minimum 1"=1'-0" scale layout for each panel type showing perforation layout and orientation as required.

D. Samples for Verification: Full-size units (or as specified below) of each type of ceiling assembly indicated; in sets for each color, texture, and pattern specified, showing the full range of variations expected in these characteristics. Submit samples for each type specified.

1. 12-inch square, (acoustical) metal pan units.

2. 12-inch long samples of each exposed molding or trim.

3. 12-inch long samples of each suspension component.

D. Qualification Data: For firms and persons specified in "Quality Assurance" (Section 1.5). Provide documents to demonstrate their capabilities and experience. Include lists of at least 5 completed projects with project names and addresses, names and addresses of Architects and employers, and other information specified.

1.5 QUALITY ASSURANCE

A. Unless accepted otherwise by the Architect, use manufacturer and installers that employ a Quality Management System complying with the program described in ISO 9001-2000, or similar system.

B. Installer

1. To certify a minimum 5 years experience installing similar systems and scope to those specified.

2. Provide list of at least 5 successful installations with similar products and scope. Include names and contact numbers of Architect and employer for reference.

C. Manufacturer

1. To certify a minimum of 5 years experience manufacturing similar products to those specified.

2. Provide support documentation including name and date of project completion. Include names and contact numbers of Architect and employers for reference.

3. Manufacturer shall be single source and shall be the fabricator and supplier of appropriate major components.

D. Fire-Test-Response Characteristics: Provide acoustical metal pan ceilings that comply with one of the following requirements:

1. Fire-response tests performed by UL, ITS/Warnock Hersey, or another independent testing and inspecting agency that is acceptable to authorities having jurisdiction and that performs testing and follow-up services.

2. Surface-burning characteristics of acoustical metal pan ceilings comply with ASTM E 1264 for Class A materials as determined by testing identical products per ASTM E 84.

E. Mock-Ups: Before releasing acoustical metal ceilings, if requested, construct mock-ups for each form of construction and finish required to verify selections made under sample submittals and to demonstrate aesthetic effects and qualities of materials and execution. Build mock-up to comply with the following minimum requirements, using materials indicated for completed work:

1. Locate mock-ups in the location and of the size indicated or, if not indicated, as directed by the Architect. Minimum mock-up size to be 10'x 10' unless otherwise specified.

2. Notify Architect seven days in advance of the dates and times when mock-ups will be constructed.

3. Demonstrate the proposed range of aesthetic effects and workmanship.

4. Site Coordination Mock-up:

   a. For approval of assembly, sequence of installation, coordination of trades involved, including ceiling panel types and shapes.

   b. Sized large enough to include a minimum of 2 adjacent panels Demonstrating interface work of fire protection sprinklers, lighting, mechanical diffusers, anchoring method at steel structure; adjacent vertical wall; skylight and fascia, trim and accessories.

5. Obtain Architect's approval of mock-ups before starting construction of acoustical metal pan ceilings. Submit detailed, ACAD shop drawing illustrating extent and scope of mock-ups. Do not proceed without approval of these drawings.

6. Maintain mock-ups during construction in an undisturbed condition as a standard for judging the completed work.

   a. When directed, demolish and remove mock-ups from project site

   b. Approved mock-ups in an undisturbed condition at the time of initial Acceptance may become part of the completed work, subject to Architect / Employer approval.

F. Pre-installation Conference: Conduct conference at Project site as directed by the project Architect.

1.6 DELIVERY, STORAGE, AND HANDLING

A. Deliver acoustical metal ceiling units and suspension system components in original, unopened packages clearly labeled with the following information: name of manufacturing source and location; product type, description and quantity; clients name and shipping address.

B. Panel's protective layer to be removed only after installation is complete to help prevent panel surface damage.

C. Store components in a fully enclosed space where they will be protected against physical damage from direct moisture, significant change in humidity, direct sunlight, significant change in temperature, surface contamination, and any other preventable cause.

D. Exercise care in handling components to prevent damage to the surfaces and edges and prevent distortion or other physical damage. Comply with prescribed stacking instructions to prevent damage to thee components

1.7 PROJECT CONDITIONS

A. Environmental Limitations

1. Do not install acoustical metal pan ceilings until after spaces are enclosed and weather tight and after wet work and work above ceilings is complete and accepted by project Architect.

2. Maintain environmental conditions (temperature, humidity and ventilation) within limits recommended by manufacturer for optimum results. Do not install products under environmental conditions outside manufacturer's absolute limits. Allow materials to reach ambient temperature and humidity for a minimum of 24 hours (48 hours recommended), prior to starting installation.

3. Coordinate with other work supported by, adjacent to or penetrating through the ceiling system.

B. Do not install products in exterior space unless the system has been specifically designed and approved for exterior application.

C. If the project is located within range of moisture associated with large bodies of water (fresh or salt), necessary materials shall be finished with coatings appropriate to condition of use.

1.8 WARRANTY

A. Provide specified manufacturer's warranty against defects in workmanship, discoloration, or other defect considered undesirable by the Architect or Employer.

B. This warranty shall remain in effect for a minimum period of five (5) years from date of initial acceptance.

1.9 MAINTENANCE & EXTRA MATERIALS

A. Maintenance Instructions: Provide manufacturers standard maintenance and cleaning instructions for finishes provided.

B. Extra Materials: Furnish extra materials described below that match products installed, are packaged with protective covering for storage, and are identified with labels describing contents. Only typical system components are included with attic stock.

1. Acoustical Metal Ceiling Pan Units: Full-size units equal to 1½ percent (1½%) of amount installed.

2. Ceiling Suspension System Components: Quantity of each grid and exposed component equal to 1½ percent (1½%) of amount installed.

PART 2 PRODUCTS

2.1 MANUFACTURERS

A. Basis of design: Ceilings Plus - 6711 E. Washington Blvd., Los Angeles, CA 90040. 800-822-3411 – www.ceilingsplus.com.

B. Supply specified item or comply with Section 01 60 00 “Substitutions”. Specified manufacturer’s standard of quality and manufacturing tolerances shall be the criteria for evaluating “equivalent” products. Substitution shall be equal to or of better quality than te specified product in the opinion of the Architect and / or owner.

2.2 MATERIALS

A. Ceiling Type ## - Ceilings Plus “Multiples Lay-in" – Perforated - ## finish to match Architect’s sample; or approved equal.

1. Panels are to be manufactured from single sheets of aluminum selected for surface flatness, smoothness and freedom from surface blemishes where exposed to view in a finished unit. Do not use material where the exposed surface exhibit pitting, seam marks, roller marks, stains, discolorations, or variations in flatness exceeding those permitted by referenced standards for stretcher-leveled aluminum alloy sheets.

2. No fasteners of any kind shall be visible on exposed face surfaces of ceiling panels or support tees. Down light openings and other ceiling penetrations shall be factory precision cut whenever viable.

3. Provide manufacturer’s recommended “hold-down” clips to fix panels against grid system as required by governing codes.

4. Panel material shall be primed aluminum sheet type 3105 (painted) / 5005 (anodized) series alloy that has a minimum 70% (50% @ 5005) recycled content. It shall be machine stretcher-leveled and a minimum of .032” thickness, or greater if required, so that the panel deflection does not exceed L/360.

5. The panel finish shall be:

   a. “Sarante” PVC free, faux wood veneer that is permanently bonded to the aluminum sheet with formaldehyde free, water based adhesive of minimum bond strength of 8 psi @ 25 degrees C.

   b. “Arboreal” real wood veneer that is permanently bonded to the aluminum sheet with formaldehyde free, water based adhesive of minimum bond strength of 8 psi @ 25 degrees C.

   c. Polyester “Painted” finish – 3105 alloy

   d. “Anodized” finish – 5005 alloy

6. Panel sizes as per drawings. Field cut panels at non modular perimeter conditions, at column interfaces or as detailed or specified.

7. Edge Profile: Panel joints are reveal condition (exposed tee – as per ASTM A 1264) both directions (as per drawings) unless specified otherwise.

8. Perforation shall be ##, or as selected by the Architect from Ceilings Plus’ standard patterns. Panels to have solid non-perforated borders along each of the four sides.

9. Sound-Absorptive Fabric Layer: Provide manufacturer's acoustic pads sized to fit concealed surface of panel. Material shall be both non-flammable and sound-absorptive.

    a. Fire Class shall be Class A, with surface-burning characteristics for flame-spread rating of 25 or less and smoke developed rating of 50 or less.. Provide independent accredited lab test results showing compliance with Class A rating as per ASTM E 84.

    b. Achieve absorption value of not less than .70- .80 NRC. Provide independent accredited laboratory test results illustrating compliance with acoustical requirements as per ASTM C 423.

    c. Acoustical metal panel ceilings to provide recycled cotton, “Ultrasorb” in sufficient thickness to adhesive NRC rating specified.

    d. Acoustical metal panel ceilings to provide recycled “Soundtex” fiber fleece.

    e. Permanently laminate fleece (Install acoustical pads) to the backside of the perforated panels, unless otherwise directed by the Architect.

10. The plenum shall be 100% accessible.

11. Fire Tests: Complete system test including suspension, primed aluminum and finish shall meet ASTM E 84 Class A.

12. Provide and install matching finish trim on each side of each suspended area (or as specified).

2.3 METAL SUSPENSION SYSTEMS. GENERAL

A. Metal Suspension Standard: Provide panel manufacturer's metal suspension systems of types, structural classifications, materials, and finishes indicated that comply with applicable ASTM C 635 requirements.

    1. Main and cross runners to be Standard “Heavy Duty” tee bar (as per ASTM C 635).

    2. Face of main and cross runners to be factory finished matte black unless known otherwise.

    3. Provide suspension system made from steel sheet with an average recycled content such that post consumer recycled content plus one half or pre consumer content is not less than 25 percent.

B. Suspension Systems: Provide complete suspensions systems with main runners, cross runners, hangers, trim molding, seismic retention clips, load resisting struts and other suspension components required to support ceiling and other ceiling supported construction (some of these parts may be supplied by the installer).

C. Attachment Devices: Size for five times design load indicated in ASTM C 635, Table 1, “Direct-Hung”, unless otherwise indicated (supplied by installer)

    1. Provide anchor, for use in the particular application, as approved by the “Structural Engineer of record”.

    2. Structural substrate, as indicated to support attachment device, also to be approved by the “Structural Engineer of record”.

    3. Anchors specified must provide corrosion resistance as per metal type and application.

        a. Anchors into Concrete (with or without steel deck)

            i. Pre-installed – Cast in Place Anchors
            ii. Post-installed - Expansion Anchors
            iii. Post-installed – Chemical Anchors
            iv. Post-installed – Powder Actuated Fasteners

b. Anchors into Wood

i. ¼" min diameter with 1 ¼" minimum penetration

c. Anchors into Steel

i. Clip or Clamp
ii. Shot Pin

d. Anchors into Steel Deck: This option requires special attention from both the "Structural Engineer of record" and the Professional Engineered retained to provide structural documents in order to coordinate detailing required to provide anchoring device.

4. "Direct-Hung" Suspensions Systems: System composed of main runners supported by hangers attached directly to building structure.

5. "Indirect-Hung" Suspension Systems: System composed of main runners connected to carrying channels that are attached by hangers to building structure, and complying with the following requirements:

a. Hangers: Type and metal standard with ceiling system manufacturer, sized to comply with structural classification indicated.

b. Wire Hangers, where applicable, Braces, and Ties: Provide wires complying with the following requirements:

i. Zinc-Coated Carbon-Steel Wire: ASTM A 641 (ASTM A 641M), Class 1 zinc coating, soft temper.
ii. Size: Select wire diameter so its stress at three times hanger design load (ASTM C 635, Table 1, Direct Hung) will be less than yield stress of wire, but provide not less than 2mm diameter wire.
iii. Extruded Aluminum members shall comply with ASTM B209.

c. Hanger Rods: Mild steel, zinc coated or protected with rust-inhibitive paint.

d. Flat Hangers: Mild steel, zinc coated or protected with rust-inhibitive paint.

e. Angle Hangers: Angles with legs not less than 22mm wide, formed with 1mm thick, galvanized steel sheet complying with ASTM A 653/A 653M, G90 coating designation, with bolted connections.

PART 3- EXECUTION

3.1 EXAMINATION

A. Examine substrates and structural framing to which acoustical metal panels attach or abut, with Installer present, for compliance with requirements specified in this and other Sections that affect installation and anchorage, and other conditions affecting performance of metal panel ceilings.

B. Proceed with installation only after unsatisfactory conditions have been corrected.

3.2 PREPARATION

A. Coordination: Furnish layouts for cast-in-place anchors, clips, and other ceiling anchors whose installation is specified in other Sections.

B. Measure each ceiling area and establish layout of acoustical metal pan units to balance border widths at opposite edges of each ceiling. Avoid using less-than-half-width units at borders, and comply with layout shown on reflected ceiling plans.

C. Survey substrate for wall attachment to assure squareness and proper elevation for wall panel installation.

3.3 INSTALLATION

A. General: Install acoustical metal pan ceilings, per manufacturers shop drawings provided, per manufacturer's written instructions and to comply with publications referenced below.

1. ClSCA "Ceiling Systems Handbook.

2. Standard for Ceiling Suspension System Installations - ASTM C 636.

3. Standard for Ceiling Suspension Systems Requiring Seismic Restraint - ASTM E 580

4. IBC (International Building Code) standard for Seismic Zone for local area.

B Suspend ceiling hangers from building's approved structural substrates and as follows:

1. Install hangers plumb and free from contact with insulation or other objects within ceiling plenum that are not part of supporting structure or of ceiling suspension system.

2. Splay hangers only where required to miss obstructions; offset resulting horizontal forces by bracing, counter-splaying, or other equally effective means.

3. Where width of ducts and other construction within ceiling plenum produce hanger spacings that interfere with location of hangers at spacing required to support standard suspension system members, install supplemental suspension members and hangers in form of trapezes or equivalent devices. Size supplemental suspension members and hangers to support ceiling loads within performance limits established by referenced standards and publications.

4. Where used secure wire hangers to ceiling suspension members and to supports above with a minimum of three tight turns. Connect hangers directly either to structures or to inserts, eye screws, or other devices that are secure; that are appropriate for substrate; and that will not deteriorate or otherwise fail due to age, corrosion, or elevated temperatures.

5. Space hangers not more than 48 inches on center, along each member supported directly from hangers, unless otherwise indicated; and provide hangers not more than 8 inches from ends of each member. Supply supporting calculations from licensed Structural Engineer verifying hanger spacing meets all requirements, when spacing exceed those recommended.

6. Fine level grid to 1/8 inch in 10 feet from specified elevation(s), square and true.

7. Adjust suspension system runners so they are square (within .5 degree from 90 degrees) and securely interlocked with one another. Remove and replace dented, bent, or kinked members.

C. Secure bracing wires to ceiling suspension members and to supports acceptable to Architect / Engineer and or inspector. Suspend bracing from building's structural members and / or structural deck, as required for hangers, without attaching to permanent metal forms, steel deck, or steel deck tabs(unless directed otherwise).

D. Install edge moldings and trim of type indicated at perimeter of acoustical ceiling area and where necessary to conceal edges of acoustical metal pan. Method of edge trim attachment and design of edge trims to be approved by Architect.

1. Screw attach moldings to substrate at intervals not more than 18” O.C. and not more than 6” from ends, leveling with ceding suspension system to a tolerance of 1/8” in 10’. Miter corners accurately and connect securely.

2. Do not use exposed fasteners, including pop rivets, on moldings and trim without prior written approval. Or unless detailed otherwise.

F. Scribe and cut acoustical metal panel units for accurate fit at penetrations by, other work through ceilings. Stiffen edges of cut units as required to eliminate evidence of buckling or variations in flatness exceeding referenced standards for stretcher-leveled metal sheet.

G. Install acoustical metal panel units in coordination with suspension system.

1. Align joints in adjacent courses to form uniform, straight joints parallel to room axis in both directions, unless otherwise indicated. Install directionally patterned or textured panels in directions indicated on approved shop drawings. Panel-joints shall flow smoothly and in a straight line within 1/8” in 10’. Intersections shall be continuous.

2. Fit adjoining units to form flush, tight joints. Scribe and cut units for accurate fit at borders and around construction penetrating ceiling.

3. Remove protective film from panels only when space is completely clean and free of airborne particles. Use white cotton gloves for final installation of panels into grid system.

3.4 ADJUSTING AND CLEANING

A. Adjust ceiling components to provide a consistent finish and appearance in conformity with established tolerances and requirements.

B. Clean exposed surfaces of acoustical metal panel ceilings and walls. Comply with manufacturer's written instructions for cleaning and touchup of minor finish damage.

C. Remove and replace work that cannot be successfully cleaned and repaired to permanently eliminate evidence of damage, including dented and bent units.

End of section

END OF SECTION

SECTION 09685

CARPET TILE

PART 1 GENERAL

1.1 SUMMARY

A. Section includes carpet tile, adhered with TacTiles.

B. Related Sections:
1. Section 091110 Non-Load Bearing Metal Framing System.
2. Section 092600 Gypsum Board Systems

1.2 REFERENCES

A. Carpet and Rug Institute:
1. CRI 104 - Standard for Installation of Commercial Carpet.

B. Consumer Products Safety Commission:
1. CPSC 16 CFR 1630 - Standard for the Surface Flammability of Carpets and Rugs.

C. National Fire Protection Association:
1. NFPA 253 - Standard Method of Test for Critical Radiant Flux for Floor Covering Systems Using a Radiant Heat Energy Source.

1.3 SUBMITTALS

A. Section 01 33 00 - Submittal Procedures: Submittal procedures.

B. Shop Drawings: Indicate layout of joints, direction of carpet pile, location of edge moldings.

C. Product Data: Submit data on specified products, describing physical and performance characteristics; sizes, patterns, colors available, and method of installation.

D. Samples:
1. Submit two carpet tiles illustrating color and pattern design for each carpet color selected.

E. Manufacturer's Installation Instructions: Submit special procedures, perimeter conditions requiring special attention.

1.4 CLOSEOUT SUBMITTALS

A. Section 017000 - Execution Requirements: Closeout procedures.

B. Operation and Maintenance Data: Submit maintenance procedures, recommended maintenance materials, and suggested schedule for cleaning.

1.5 QUALITY ASSURANCE

A. Surface Burning Characteristics:
   1. Floor Finishes: Comply with one of the following:
      a. Class I, minimum 0.45 watts/sq cm] [Class II, minimum 0.22 watts/sq cm when tested in accordance with NFPA 253.
      b. CPSC 16 CFR 1630.

1.6 QUALIFICATIONS

A. Manufacturer: Company specializing in manufacturing products specified in this section with minimum three years documented experience.

B. Installer: Company specializing in performing work of this section with minimum three years documented experience. .
   1. FCIB or IFCI certified carpet installers.

1.7 PRE-INSTALLATION MEETINGS

A. Section 013000 - Administrative Requirements: Pre-installation meeting.

B. Convene minimum one week prior to commencing work of this section.

1.8 ENVIRONMENTAL REQUIREMENTS

A. Section 016000 - Product Requirements.

B. Store materials in area of installation for 48 hours prior to installation.

1.9 EXTRA MATERIALS

A. Section 017000 - Execution Requirements: Spare parts and maintenance products.

B. Supply 5 square yards of each pattern and of each color selected.

PART 2 PRODUCTS

2.1 CARPET TILE

A. Manufacturers:
   1. Interface Flooring Systems, Inc.: _____.
   Color: _____.
   2. Substitutions: Not Permitted.

2.2 ACCESSORIES

A. Sub-Floor Filler: Type recommended by flooring material manufacturer.

B. Moldings and Edge Strips: Rubber, color to be selected.

C. Contact Adhesive: Recommended by carpet manufacturer.

PART 3 EXECUTION

3.1 EXAMINATION

A. Section 01 30 00 - Administrative Requirements: Coordination and project conditions.

B. Verify floor surfaces are smooth and flat within tolerances specified and as recommended by manufacturer.

3.2 PREPARATION

A. Remove sub-floor ridges and bumps. Fill minor or local low spots, cracks, joints, holes, and other defects with sub-floor filler.

B. Apply, trowel, and float filler to achieve smooth, flat, hard surface. Prohibit traffic until filler is cured.

C. Clean substrate.

3.3 INSTALLATION

A. Install carpet tile in accordance with manufacturer’s recommendation.

B. Before commencing installation, clean and vacuum entire surface.

C. Fit carpet tight to intersection with vertical surfaces without gaps.

D. Locate each TacTile as recommended by manufacturer, over clean and dry tile.

E. Trim carpet tile neatly at walls and around interruptions.

F. Complete installation of edge strips, concealing exposed edges.

G. Coordinate carpet installation with millwork, walls, columns, electrical, floor outlets, base, etc.

3.4 CLEANING

A. Section 017000 - Execution Requirements: Final cleaning.

B. Remove excess adhesive from floor, base, and wall surfaces without damage.

C. Clean and vacuum carpet surfaces.

END OF SECTION

SECTION 09900
PAINTING

PART 1 - GENERAL

1.01 RELATED DOCUMENTS

A. Drawings and General Provisions of Contract, including General and Supplementary Conditions and Division 1 specification section, apply to work of this section.

1.02 SECTION INCLUDES

A. Surface preparation and field application of paints and coatings.

B. Paint exterior mechanical items as scheduled.

1.03 SURFACES TO BE PAINTED

A. All exposed surfaces whether or not colors are designated in "schedules".

B. All exposed structural steel and metal deck.

C. Exposed bare and covered pipe and ducts and hangers.

D. All interior concrete floors unless noted otherwise.

E. Exposed steel and iron work.

F. Tops and bottom of all wood doors.

G. Primed metal surfaces of equipment installed under mechanical and electrical work including distribution cabinets.

H. Surfaces, cables, piping visible through grille work.

I. All exterior concrete surfaces except concrete walks, ramps and curbs. Surfaces include stem, walls or foundation walls.

J. All exposed to view portions of control joints.

1.04 SURFACES NOT TO BE PAINTED

A. Natural finish of material where specifically noted not to be painted.

B. Pre-finished items including acoustic materials, finished mechanical and electrical equipment, including light fixtures and switch gear.

C. Concealed surfaces such as walls or ceilings in concealed areas and generally inaccessible areas, foundation spaces, furred areas, utility tunnels, pipe spaces, duct shafts, and elevator shafts.

D. Finished metal surfaces such as anodized aluminum, stainless steel and chromium plate.

E. Operating parts, valve and damper operators, linkages, sensing devices, motor and fan shafts.

F. Code required labels.

1.05 SUBMITTALS

A. Submit under provisions of Section 01300.

B. Product Data: Provide data on all finishing products.

C. Samples: Submit two sets of paint samples, 4 x 5 inch in size illustrating colors scheduled. Submit color fan when requested by Architect.

1.06 SINGLE SOURCE RESPONSIBILITY

A. Provide primers and other undercoat paint produced by same manufacturer as finish coats.

1.07 REGULATORY REQUIREMENTS

A. Conform to applicable code for flame and smoke rating requirements for finishes.

1.08 FIELD SAMPLES

A. Provide field sample of paint under provisions of Section 01400.

B. Provide two field sample panels, 8 feet long by full height or minimum 8 foot high; including door, window and frames and, texture, and finish. **Provide samples a minimum of 1 week prior to scheduled start of painting work.**

C. Locate where directed by architect.

D. Accepted sample may remain as part of the Work.

E. **Architect may change color based on review of field sample, final acceptance of all colors will be from field samples.**

1.09 DELIVERY, STORAGE, AND HANDLING

A. Deliver, store, protect and handle products to site under provisions of Section 01600.

B. Deliver products to site in sealed and labeled containers; inspect to verify acceptability.

C. Container label to include manufacturer's name, type of paint, brand name, lot number, brand code, coverage, surface preparation, drying time, cleanup requirements, color designation, and instructions for mixing and reducing.

D. Store paint materials at minimum ambient temperature of 45 degrees F and a maximum of 90 degrees F in ventilated area, and as required by manufacture's instructions.

1.10 ENVIRONMENTAL REQUIREMENTS

A. Do not apply materials when surface and ambient temperatures are outside the temperature ranges required by the paint product manufacturer.

B. Do not apply exterior coatings during rain or snow, or when relative humidity is outside the humidity ranges required by the paint product manufacturer.

C. Minimum Application Temperatures for Latex Paints: 45 degrees F for interiors; 50 degrees F for exterior unless required otherwise by manufacturer's instructions.

PART 2 - PRODUCTS

2.01 MANUFACTURERS

A. Manufacturers

1. Benjamin Moore and Co. (BM)
2. PPG Industries, Pittsburgh Paints (PPG)
3. Sherwin - Williams Co. (SW)
4. KWAL Paint Manufacturing Co. Inc. (Comex/KWAL)

B. Manufacturers / Concrete Stain

1. Lithochrome Chemstain by L.M. Scofield Company
2. Stain-Crete by Increte Systems
3. Kemiko Stone Tone Stain by Kemiko Concrete Products
4. Sherwin-Williams H&C Stain

2.02 MATERIALS

A. Coatings: Ready mixed, except field catalyzed coatings. Process pigments to a soft-paste consistency, capable of being readily and uniformly dispersed to a homogeneous coating; good flow and brushing properties; capable of drying or curing free of streaks or sags.

B. Accessory Materials: Linseed oil, shellac, turpentine, paint thinners and other materials not specifically indicated but required to achieve the finishes specified, of commercial quality.

C. Stain (concrete): Ready to use, penetrating, reactive stain that chemically combines with cured concrete.

2.03 FINISHES

A. Refer to schedule at end of section for surface finish schedule. Refer to drawings for color selection.

PART 3 - EXECUTION

3.01 EXAMINATION

A. Verify site conditions under provisions of Section 01039.

B. Verify that surfaces are ready to receive work as instructed by the product manufacturer.

C. Examine surfaces scheduled to be finished prior to commencement of work. Report any condition that may potentially affect proper application. Beginning of work means acceptance of existing conditions.

D. Measure moisture content of surfaces using an electronic moisture meter. Do not apply finishes unless moisture content of surfaces are below the following maximums:

1. Plaster and Gypsum Wallboard: 12 percent.
2. Concrete: 12 percent.
3. Concrete Floors: 8 percent.

E. Concrete that is to be stained must be fully cured and should not be applied prior to 60 days within pour.

3.02 PREPARATION

A. Remove or mask electrical plates, hardware, light fixture trim, escutcheons, and fittings prior to preparing surfaces or finishing.

B. Correct defects and clean surfaces which affect work of this section. Remove existing coatings that exhibit loose surface defects.

C. Insulated Coverings: Remove dirt, grease and oil from canvas and cotton.

D. Concrete Floors: Remove contamination, acid etch and rinse floors with clear water. Verify required acid-alkali balance is achieved. Allow to dry.

E. Gypsum Board Surfaces: Fill minor defects with filler compound. Spot prime defects after repair.

F. Galvanized Surfaces: Remove surface contamination and oils and wash with solvent. Apply coat of etching primer.

G. Concrete and Unit Masonry Surfaces Scheduled to Receive Paint Finish: Remove dirt, loose mortar, scale, salt or alkali powder, and other foreign matter. Remove oil and grease with a solution of tri-sodium phosphate; rinse well and allow to dry. Remove stains caused by weathering of corroding metals with a solution of sodium metasilicate after thoroughly wetting with water. Allow to dry.

H. Shop Primed Steel Surfaces: Sand and scrape to remove loose primer and rust. Feather edges to make touchup patches inconspicuous. Clean surfaces with solvent. Prime bare steel surfaces.

I. Interior Wood Items Scheduled to Receive Paint Finish: Wipe off dust and grit prior to priming. Seal knots, pitch streaks, and sappy sections with sealer. Fill nail holes and cracks after primer has dried; sand between coats.

J. Interior wood items scheduled to receive transparent finish: Wipe off dust and grit prior to sealing, seal knots, pitch streaks, and sappy sections with sealer. Fill nail holes and cracks after sealer has dried; sand lightly between coats.

K. Doors Scheduled for Painting: Seal top and bottom edges with primer. Apply 2 coats paint or stain to all edges to match face.

L. Concrete Surfaces Scheduled to Receive Stain Finish: Immediately prior to chemically staining, the concrete must be thoroughly cleaned. The surface should be swept, then pressure washed or scrubbed using a rotary floor machine. Use of a suitable, high-quality commercial detergent will facilitate cleaning. The surface must be rinsed after cleaning until the rinse water is completely clean. Use of acid cleaners is prohibited.

3.03 APPLICATION

A. **Apply products in accordance with manufacturer's instructions.**

B. Do not apply finishes to surfaces that are not dry.

C. Apply each coat to uniform finish.

D. Where clear finishes are required, tint fillers to match wood. Work fillers into the grain before set. Wipe excess from surface.

E. Apply each coat of paint slightly darker than preceding coat unless otherwise approved.

F. Sand wood and metal lightly between coats to achieve required finish.

G. Vacuum clean surfaces free of loose particles. Use tack cloth just prior to applying next coat.

H. Allow applied coat to dry before next coat is applied.

I. Prime concealed surfaces of all woodwork with primer paint.

J. Pavement marking shall have crisp edges. Provide additional coat if edges are not crisp and if substrate shows through.

3.04 FINISHING MECHANICAL AND ELECTRICAL EQUIPMENT

A. Refer to Mechanical and Electrical Sections for schedule of color coding and identification banding of equipment, duct work, piping, and conduit.

B. Paint shop primed equipment.

C. Remove unfinished louvers, grilles, covers, and access panels on mechanical and electrical components and paint separately.

D. Prime and paint exposed items: insulated and non-insulated exposed pipes, conduit, boxes, insulated and non-insulated exposed ducts, hangers, brackets, collars and supports, except where items are prefinished.

E. Paint interior surfaces of air ducts that are visible through grilles and louvers with one coat of flat black paint, to visible surfaces. Paint dampers exposed behind louvers and grilles.

F. Paint exposed items occurring in finished areas.

G. Paint both sides and edges of plywood backboards for electrical and telephone equipment before installing equipment.

H. Color code equipment, piping, conduit, and exposed duct work. Color band and identify with flow arrows names and numbering.

I. Reinstall electrical cover plates, hardware, light fixture trim, escutcheons, and fittings removed prior to finishing.

3.05 CLEANING

A. Clean work under provisions of 01700.

B. Collect waste material which may constitute a fire hazard, place in closed metal containers and remove daily from site.

3.06 SCHEDULE - EXTERIOR SURFACES

A. Pavement Markings:

1. One coat paint, white, SW-Set Fast Acrylic Latex Traffic Marking Paint, 7.5 mils total dry thickness.

B. Concrete, Concrete Block:

1. One coat of masonry or block primer.
2. Two coats A-100 Exterior Latex Flat, A6 series, <50 g/L VOC.

C. Concrete Block: Clear

1. One coat of SW Loxon 40% Silane water repellent sealer (40% Silane).

D. Steel - Shop Primed:

1. Touch-up with primer.
2. Two coats of SW Pro Industrial Acrylic Semi-Gloss, B66-650 series, <50 g/L VOC.

E. Steel - Galvanized:

1. Touch-up with primer.
2. Two coats of SW Pro Industrial Acrylic Semi-Gloss, B66-650 series, <50 g/L VOC.

F. Steel - Galvanized Deck and Exposed Metals:

1. Touch-up with primer.
2. 3 mil DFT thick minimum topcoat
3. One-Two coat of SW Low VOC Waterborne Acrylic Dryfall, Flat B42W81, <50 g/L VOC.

G. Plaster:

1. One coat of 100% acrylic primer.

2. Two coats of SW A-100 Exterior Latex Flat, A6 series, <50 g/L VOC.

H. EIFS:

1. Surface Conditioner as recommended by manufacturer.
2. Two coats SW A-100 Exterior Latex Flat, A6 series, <50 g/L VOC.

3.07 SCHEDULE - INTERIOR SURFACES

A. Wood Painted:

1. One coat SW ProMar 200 Zero VOC Primer, B28W2600, 0 g/L VOC.
2. Two coats of SW Pro Industrial Acrylic Semi-Gloss, B66-650 series, <50 g/L VOC.

B. Wood stained:

1. Filler coat (for open grained wood only).
2. One coat SW Wood Classics 250 g/l Stain, A49W800 series, 250 g/L VOC.
3. Two coats of SW Wood Classics WB Polyurethane A68, <350 g/L VOC.

C. Concrete, concrete block:

1. One coat of masonry or block filler.
2. Two coats of SW ProMar 200 Zero VOC Eg-Shel B26-2600 series, 0 g/L VOC.

D. Steel - Primed:

1. Touch-up metal primer.
2. Two coats of SW Pro Industrial Acrylic Semi-Gloss, B66-650 series, <50 g/L VOC.

E. Steel - Galvanized:

1. Touch-up galvanize primer.
2. Two coats of SW Pro Industrial Acrylic Semi-Gloss, B66-650 series, <50 g/L VOC.

F. Gypsum Board:

Flat Finish — Low Odor Zero VOC System

1. One coat of SW ProMar 200 Zero VOC Primer, B28W2600, 0 g/L VOC.
2. Two coats of SW ProMar 200 Zero VOC Flat, B30-2600 series, 0 g/L VOC.

Eggshell Finish — Low Odor Zero VOC System

1. One coat of SW ProMar 200 Zero VOC Eg-Shel B26-2600 series, 0 g/L VOC.
2. Two coats of SW ProMar 200 Zero VOC Eg-Shel B26-2600 series, 0 g/L VOC.

Semi-Gloss Finish — Low Odor Zero VOC System

1. One coat of SW ProMar 200 Zero VOC Primer, B28W2600, 0 g/L VOC.
2. Two coats of SW ProMar 200 Zero VOC Semi-Gloss B31-2600 series, 0 g/L VOC.

G. Plaster:

1. One coat of 100% acrylic primer.
2. Two coats of SW ProMar 200 Zero VOC Eg-Shel B26-2600 series, 0 g/L VOC.

H. Concrete Floors (painted):

1. Two coats of ArmorSeal® 1000 HS Epoxy, B67-2000 Series

I. Concrete Floors (stained):

1. Solid Stain-Silicone Acrylic System: Opaque
1st Coat: H&C Concrete Sealer Solid Color Solvent Based
2nd Coat: H&C Concrete Sealer Solid Color Solvent Based

2. Acid Stain Reactive Concrete Stain System (bare concrete only)
1st Coat: H&C Infusion Reactive Concrete Stain
(optional second coat to achieve desired color)
2nd Coat: H&C Infusion Solvent Base Sealer
3rd Coat: H&C Infusion Solvent Base Sealer

END OF SECTION

SECTION 09980
COATING SYSTEMS FOR EXTERIOR MASONRY

PART 1 GENERAL

1.1 SECTION INCLUDES

A. Coating systems for exterior masonry.

1.2 RELATED SECTIONS

A. Section 04200 - Concrete Masonry Units.

1.3 DEFINITIONS

A. Definitions of Painting Terms: ASTM D 16, unless otherwise specified.
B. Dry Film Thickness (DFT): Thickness of a coat of paint in fully cured state measured in mils (1/1000 inch).

1.4 SUBMITTALS

A. Comply with Section 01330 - Submittal Procedures.
B. Product Data: Submit mfr's product data for each coating, including description, technical data, surface preparation, and application instructions.
C. Color Samples: Submit manufacturer's color samples showing full range of standard colors.
D. Manufacturer's Quality Assurance: Submit manufacturer's certification that coatings comply with specified requirements and are suitable for intended application.
E. Applicator's Quality Assurance: Submit list of a minimum of 5 completed projects of similar size and complexity to this Work. Include for each project:

1. Project name and location.
2. Name of owner.
3. Name of contractor.
4. Name of architect.
5. Name of coating manufacturer.
6. Approximate area of coatings applied.
7. Date of completion.

F. Warranty: Submit manufacturer's standard warranty.

1.6 QUALITY ASSURANCE

A. Manufacturer's Qualifications:
   1. Specialize in manufacture of coatings with a minimum of 10 years successful experience.
   2. Able to demonstrate successful performance on comparable projects.
   3. Single Source Responsibility: Coatings application accessories shall be products of a single Manuf.

B. Applicator's Qualifications:

   1. Experienced in application of specified coatings for a minimum of 5 years on projects of similar size and complexity to this Work.
   2. Applicator's Personnel: Employ persons trained for application of specified coatings.

C. Mock-Ups: Prepare 10 foot x 10 foot mock-up for each coating system specified using same materials, tools, equipment, and procedures intended for actual surface preparation and application.

Obtain Architect's approval of mock-ups. Retain mock-ups to establish intended standards by which coating systems will be judged.

D. Preapplication Meeting: Convene a meeting 2 weeks before start of application of coating systems. Require attendance of parties directly affecting work of this section, including Contractor, Architect, applicator, and manufacturer's representative. Review the following:

1. Environmental requirements.
2. Protection of surfaces not scheduled to be coated.
3. Surface preparation.
4. Application.
5. Repair.
6. Field quality control.
7. Cleaning.
8. Protection of coating systems.
9. One-year inspection.
10. Coordination with other work.

1.7 DELIVERY, STORAGE, AND HANDLING

A. Delivery: Deliver materials to site in manufacturer's original, unopened containers and packaging, with labels clearly identifying:
1. Coating or material name.
2. Manufacturer.
3. Color name and number.
4. Batch or lot number.
5. Date of manufacture.
6. Mixing and thinning instructions.

B. Storage:
1. Store materials in a clean dry area and within temperature range in accordance with manufacturer's instructions. 2. Keep containers sealed until ready for use. 3. Do not use materials beyond manufacturer's shelf life limits.

C. Handling: Protect materials during handling and application to prevent damage or contamination.

1.8 ENVIRONMENTAL REQUIREMENTS

A. Weather:
1. Air and Surface Temperatures: Prepare surfaces and apply and cure coatings within air and surface temperature range in accordance with manufacturer's instructions.
2. Surface Temperature: Minimum of 5 degrees F (3 degrees C) above dew point.
3. Relative Humidity: Prepare surfaces and apply and cure coatings within relative humidity range in accordance with manufacturer's instructions.
4. Precipitation: Do not prepare surfaces or apply coatings in rain, snow, fog, or mist.
5. Wind: Do not spray coatings if wind velocity is above manufacturer's limit.

B. Ventilation: Provide ventilation during coating evaporation stage in confined or enclosed areas in accordance with manufacturer's instructions.

C. Dust and Contaminants:

1. Schedule coating work to avoid excessive dust and airborne contaminants.
2. Protect work areas from excessive dust and airborne contaminants during coating application and curing.

PART 2 PRODUCTS

2.1 MANUFACTURER COATING SYSTEMS FOR CONCRETE MASONRY UNITS

A. Chemporbe Coating Systems 2805 Industrial Lane Garland,TX 75041 P800-760-6776. Pylon 1422 or equal.

2.7 ACCESSORIES

A. Coating Application Accessories:
   1. Accessories required for application of specified coatings in accordance with manufacturer's instructions, including thinners.
   2. Products of coating manufacturer.

PART 3 EXECUTION

3.1 EXAMINATION

A. Examine areas and conditions under which coating systems are to be applied. Notify Architect of areas or conditions not acceptable. Do not begin surface preparation or application until unacceptable areas or conditions have been corrected.

3.2 PROTECTION OF SURFACES NOT SCHEDULED TO BE COATED

A. Protect surrounding areas and surfaces not scheduled to be coated from damage during surface preparation and application of coatings.

B. Immediately remove coatings that fall on surrounding areas and surfaces not scheduled to be coated.

3.3 SURFACE PREPARATION OF CONCRETE AND MASONRY

A. Prepare surfaces in accordance with manufacturer's instructions and SSPC-SP 13/NACE 6.
B. Ensure surfaces are clean, dry, and free of oil, grease, dirt, dust, and other contaminants.
C. Test concrete for moisture in accordance with ASTM D 4263.
D. Allow concrete and mortar to cure for a minimum of 14 days before coating. E. Level protrusions and mortar spatter.

3.6 APPLICATION

A. Apply coatings in accordance with manufacturer's instructions.
B. Mix and thin coatings, including multi-component materials, in accordance with manufacturer's instructions.
C. Keep containers closed when not in use to avoid contamination.
D. Do not use mixed coatings beyond pot life limits.
E. Use application equipment, tools, pressure settings, and techniques in accordance with manufacturer's instructions.
F. Uniformly apply coatings at spreading rate required to achieve specified DFT.
G. Apply coatings to be free of film characteristics or defects that would adversely affect performance or appearance of coating systems.

3.7 REPAIR

A. Materials and Surfaces Not Scheduled To Be Coated: Repair or replace damaged materials and surfaces not scheduled to be coated.
B. Damaged Coatings: Touch-up or repair damaged coatings. Touch-up of minor damage shall be acceptable where result is not visibly different from adjacent surfaces. Recoat entire surface where

touch-up result is visibly different, either in sheen, texture, or color.

C. Coating Defects: Repair in accordance with manufacturer's instructions coatings that exhibit film characteristics or defects that would adversely affect performance or appearance of coating systems.

3.8 FIELD QUALITY CONTROL

A. Inspector's Services:

1. Verify coatings and other materials are as specified.
2. Verify surface preparation and application are as specified.
3. Verify DFT of each coat and total DFT of each coating system are as specified using wet film and dry film gauges.
4. Coating Defects: Check coatings for film characteristics or defects that would adversely affect performance or appearance of coating systems.
5. Report:

a. Submit written reports describing inspections made and actions taken to correct nonconforming work.
b. Report nonconforming work not corrected.
c. Submit copies of report to Architect and Contractor.

B. Manufacturer's Field Services: Manufacturer's representative shall provide technical assistance and guidance for surface preparation and application of coating systems.

3.9 CLEANING

A. Remove temporary coverings and protection of surrounding areas and surfaces.

3.10 PROTECTION OF COATING SYSTEMS

A. Protect surfaces of coating systems from damage during construction.

3.11 ONE-YEAR INSPECTION

A. Owner will set date for one-year inspection of coating systems.

B. Inspection shall be attended by Owner, Contractor, Architect, and manufacturer's representative.

C. Repair deficiencies in coating systems as determined by Architect in accordance with manufacturer's instructions.

3.12 SCHEDULES

A. Coating System Schedule: All masonry block.

END OF SECTION

SECTION 10160
TOILET COMPARTMENTS

PART 1 GENERAL

1.01 SECTION INCLUDES
- A. Stainless Steel partitions, floor mounted head rail braced and wall mounted screens.

1.02 REFERENCES
- A. ANSI A117.1 - Safety Standards for the Handicapped.
- B. ASTM A167 - Stainless and Heat Resisting Chromium-Nickel Steel Plate, Sheet, and Strip.

1.03 SUBMITTALS
- A. Submit under provisions of Section 01300.
- B. Shop Drawings: Indicate partition plan, elevation views, dimensions, details of wall, floor, and ceiling supports, door swings.
- C. Product Data: Provide data on panel construction, hardware, and accessories.
- D. Samples: Submit one sample of partition panels, 6 x 6 inch in size illustrating panel finish, color, and sheen.
- E. Manufacturer's Installation Instructions: Indicate special procedures, perimeter conditions requiring special attention.

1.04 FIELD MEASUREMENTS
- A. Verify that field measurements are indicated on the shop drawings and as instructed by the manufacturer.

1.05 COORDINATION
- A. Coordinate work under provisions of Section 01040.
- B. Coordinate the work with placement of support framing and anchors in wall and ceiling.

PART 2 PRODUCTS

2.01 MANUFACTURER
- A. Acceptable manufacturers:
  Flushite; Baked Enamel and Stainless Steel by Flush Metal partitions or equal.
- B. Other acceptable manufacturers:
  Bradley General Partitions MetPar
  Global Ampco

2.02 MATERIALS
- A. ASTM A167, Type 304 stainless steel.
  1. Pilaster (overhead-braced) - 20 ga.
  2. Pilasters (unbraced) - 16 ga.
  3. Panels and Screens - 20 ga.
  4. Doors - 20 ga.
- B. Partitions to be floor mounted with over head brace. Screens to be wall mounted. Provide blocking.

2.03 ACCESSORIES

- A. Pilaster Shoe: Formed ASTM A167 type 304 stainless steel with No. 4 finish, 3 inch high, with adjustable screw jack.

B. Head Rails: Stainless Steel, 1 x 1-5/8 inch size, with anti-grip strips and cast socket wall brackets.
C. Attachments, Screws, and Bolts: Stainless steel; tamper proof type, heavy duty
D. Hardware: Stainless steel:
   1. Pivot hinges, gravity type, adjustable for door close positioning.
   2. Nylon bearings.
   3. Thumb turn door latch with exterior emergency access feature.
   4. Door strike and keeper with rubber bumper.
   5. Coat hook with rubber bumper.
   6. Door pull for outswinging doors.

2.04 FABRICATION
A. Fabricate partitions in accordance with FS RR-P-1352.
B. Fabricate components of steel sheet as follows:
   1. Panel and Door Faces: 20 gage.
   2. Pilaster Faces: 20 gage.
   3. Reinforcement: 12 gage.
C. Doors and Panels:
   1. Thickness: 1 inch.
   2. Door Width: 24 inch.
   3. Door Width for Handicapped Use: 36 inch, out-swinging.
   4. Height: 58 inch.
D. Pilasters: 1-1/4 inch (32 mm) thick, of sizes required to suit cubicle width and spacing.
E. Door, Panel, and Pilaster Construction: Sheet steel face, pressure bonded to sound deadening core, form and close edges, miter and weld corners, grind smooth.
F. Internal Reinforcement: Provide in areas of attached hardware and fittings. Mark locations of reinforcement for partition mounted washroom accessories.

2.05 FINISHING
A. Clean, degrease, and neutralize panels.
B. Stainless Steel Surfaces: No. 4 finish.
C. Exposed Steel Surfaces: Polished chrome plated.

PART 3 EXECUTION

3.01 EXAMINATION
A. Verify site conditions under provisions of Section 01040.
B. Verify correct spacing of and between plumbing fixtures.
C. Verify correct location of built-in framing, anchorage, and bracing.

3.02 INSTALLATION
A. Install partitions secure, rigid, plumb, and level in accordance with manufacturer's instructions.
B. Maintain 3/8 to 1/2 inch space between wall and panels and between wall and end pilasters.
C. Attached panel brackets securely to walls using anchor devices.
D. Attach panels and pilasters to brackets with [tamper proof] through bolts and nuts. Locate head rail joints at pilaster center lines.
E. Anchor urinal screen panels to walls with two panel brackets and vertical upright consisting of pilaster anchored to floor and ceiling.
F. Provide adjustment for floor variations with screw jack through steel saddles integral with pilaster. Conceal floor fastenings with pilaster shoes.
G. Support pilasters from built-in framing using two adjustable hanging studs providing vertical leveling. Conceal ceiling fastenings with pilaster shoe.

H. Equip each door with two hinges, one door latch, one coat hook and bumper; outswinging door with pull.
I. Install door strike and keeper with door bumper on each pilaster in alignment with door latch.
J. Field touch-up of scratches or damaged enamel finish will not be permitted.
K. Replace damaged or scratched materials with new materials.

3.03 ERECTION TOLERANCES
A. Maximum Variation From True Position: 1/4 inch.
B. Maximum Variation From Plumb: 1/8 inch.
C. There is no tolerances at ADA requirements.

3.04 ADJUSTING
A. Adjust work under provisions of Section 01700.
B. Adjust and align hardware to uniform clearance at vertical edge of doors, not exceeding 3/16 inch.
C. Adjust hinges to position doors in partial opening full closed position when unlatched. Return out swinging doors to closed position.
D. Adjust adjacent components for consistency of line or plane.

3.05 SCHEDULES
A. Provide toilet compartments and screens on all restroom shown on plans.

END OF SECTION

Section 10260

STAINLESS STEEL CORNER GUARDS

PART 1 – GENERAL

1.01 SUMMARY
A. Corner Guard system for wall protection:

1.02 SECTION INCLUDES
A. Stainless Steel Corner Guard Systems

1.03 SUBMITTALS
A. Product data for each type of Corner Guard specified.
B. 3 each full size profiles, 12" long samples of each type Corner Guard indicated.
C. Cleaning and maintenance instructions.

1.04 DELIVERY, STORAGE AND HANDLING
A. Deliver materials in unopened factory packaging to the jobsite and store in original packaging in a climate controlled location away from direct sunlight.

1.05 PROJECT CONDITIONS
A. Products must be installed in an interior climate controlled environment.

1.06 WARRANTY
A. Standard CAP Limited Lifetime Warranty against material and manufacturing defects.

PART 2 – PRODUCTS

2.01 MANUFACTURER
A. Acceptable Manufacturer:
Cap Industries, Inc., 10722 Tucker Street, Beltsville, MD. 20705 USA;
Telephone: 301-937-4383, Fax: 301-937-6850,
Internet address: www.cornerguard.net
B. Substitutions: Not permitted
C. Provide all Corner Guards from a single source.

2.02 MATERIALS
A. Stainless Steel: 3” x 3” x 48” x 16 ga. Corner Guards shall be manufactured from Type 304, 16 gauge Stainless Steel.

2.04 COMPONENTS
A. Attachment options;
1. Field applied heavy duty construction adhesive.
2. Factory applied two sided tape.
3. Pre-drilled holes for Phillips head screws.

2.05 FINISHES
A. Stainless steel: No. 4 Satin finish.

PART 3 – EXECUTION

3.01 EXAMINATION

A. Examine areas and conditions in which the corner guard systems will be installed.

1. Complete all finishing operations, including painting, before beginning installation of corner guards.

B. Wall surface shall be dry and free from dirt, grease and loose paint.

3.02 PREPARATION

A. General: Prior to installation, clean substrate to remove dust, debris and loose particles.

3.03 INSTALLATION

A. General: Locate the Corner Guard as indicated on the approved detail drawing for the appropriate substrate and Install corner guard level and plumb at the height indicated on the drawings.

B. Installation of Stainless Steel Corner Guards:

1. Surface must be dry, clean and properly sealed.
2. Two sided tape: Peel paper from the factory applied tape and apply pressure until a tight fit is achieved.
3. Cement on: Apply a bead of Premium Heavy Duty Construction Adhesive in a zigzag pattern over the back of each wing of the corner guard. Position corner guard on the wall and apply pressure until a tight fit is achieved.
4. Screw on: Position the corner guard on the wall and attach it using the stainless steel screws.
5. Remove the protective plastic covering from the exposed surface of the corner guard.

3.04 CLEANING

A. At completion of the installation, clean surfaces with a neutral based, non-abrasive cleaner. Ammonia and alcohol based cleaners may be used

END OF SECTION

SECTION 10264
BULLET RESISTANT PANELS

PART 1 – GENERAL

1.1 SUMMARY

A. Section includes bullet resistant fiberglass panels Level 1.

1.2 REFERENCES

A. American Society for Testing and Materials:
   1. ASTM E119-98 Standard Test for One-Hour Fire-Rating of Building Construction and Materials
B. International Organization for Standardization:
   1. ISO 9001:2008 Quality Management System
C. Small Business Administration:
   1. SBA Small Business Size Standard
D. Underwriters Laboratories:
   1. UL 752 Specifications and Ammunition, 11th Edition, Standard for Bullet Resisting Equipment published September 9, 2005, revised December 21, 2006, Level 1
E. The United States Department of State:
   1. The International Traffic in Arms Regulations (ITAR)

1.3 SUBMITTALS

A. Submittals for Review: Submit for approval prior to fabrication.
   1. Product Data: Include specifications, brochures, and samples.
   2. Recommendations for installation of Bullet Resistant Fiberglass Panels available in print document and video link.
B. Certificates: Submit printed data to indicate compliance with following requirements.
   1. **UL LISTING Verification** and **UL752 Current Test Results** as provided by Underwriters Laboratories.
   2. ASTM E119-98 One-Hour Fire Rating of Building Construction and Materials.
   3. Manufacturer's third party certificate of registration with ISO 9001:2008.
   4. Manufacturer's U.S. Dept. of State ITAR Statement of Registration.
   5. Manufacturer's SBA Profile verifying small business status by the SBA.

1.4 DELIVERY, HANDLING, AND STORAGE

A. Deliver materials to project with manufacturer's **UL LISTED Labels** intact and legible.
B. Handle material with care to prevent damage. Store materials inside under cover, stack flat and off the floor.

1.5 WARRANTY

A. Warrant all materials and workmanship against defects for a period of ten (10) years from the date of Substantial Completion.

PART 2 – PRODUCTS

2.1 MANUFACTURER

A. Design Basis: Contract Documents are based on ArmorCore by **Waco Composites**, (Waco, TX 76710, phone: 254-752-3622, toll free: 866-688-3088, email: sales@armorcore.com, web: www.armorcore.com)

B. Substitutions, are permitted as equal material, follow guidelines for substitutions.

2.2 PERFORMANCE CRITERIA

A. Bullet Resistant Fiberglass Panels shall be “non ricochet type” to permit the encapture and retention of an attacking projectile lessening the potential of a random injury or lateral penetration.
B. Panel Rating: UL752 Level 1.
C. Bullet resistance of joints: equal to that of the panel.

2.3 MATERIALS

A. Panels fabricated of multiple layers of woven roving ballistic grade fiberglass cloth impregnated with a thermoset polyester resin and compressed into flat rigid sheets.
B. Thickness: 1/4” nominal thickness
C. Nominal Weight: 2.6 lbs. per sq. ft.
D. Available Panel Sizes: 3’ x 8’, 3’ x 9’, 3’ x 10’, 4’ x 8’, 4’ x 9’, 4’ x 10’, 5’ x 8’, 5’ x 9’, 5’ x 10’ and custom.
E. Panels manufactured in the United States of America with raw materials sourced from the U.S.A. for quality assurance purposes and to comply with any applicable “Buy American” provisions.

PART 3 - EXECUTION

3.1 EXAMINATION

A. Prior to starting installation, verify work of related trades required in contract documents and architectural drawings is complete to the point where work of this Section may properly commence.

3.2 JOINTS

A. Reinforce joints with a back-up layer of bullet resistive material. Minimum width of reinforcing layer at joint shall be 4-inches, centered on panel joints.

3.3 APPLICATION

A. Install armor in accordance with manufacturer’s printed recommendations and as required by contract documents.
B. Secure armor panels using screws, bolts, or an industrial adhesive.
   1. Method of application shall install panels minimizing vulnerabilities by fitting tightly to adjacent surfaces including concrete floor slab, concrete roof slab, bullet resistive door frames, bullet resistive window frames, and the like.

END OF SECTION 10264

SECTION 10350

FLAGPOLES

PART 1 GENERAL

1.01 SECTION INCLUDES

A. Aluminum flagpoles (2), ground mounted where shown on drawings, as specified herein and as needed for a complete and proper installation.
B. Manual Operation.

1.02 PRODUCTS FURNISHED BUT NOT INSTALLED UNDER THIS SECTION

A. Section: Placement of anchor devices and foundation sleeve.
B. Section: Placement and wire connection of control operator.

1.03 RELATED SECTIONS

A. Section: Concrete base and foundation construction.
B. Section: Conduit, cable, outlet boxes, and disconnect.
C. Documents affecting work of this section include, but are not neccesarily limited to General Conditions, Supplementary Conditions and sections in divisions1 of these specifications

1.04 REFERENCES

A. AASHTO M-36 - Corrugated Metal Culvert Pipe.
B. ASTM A53 - Pipe, Steel, Black and Hot-Dipped, Zinc Coated, Welded and Seamless.
C. ASTM A123 - Zinc (Hot Dipped Galvanized) Coatings on Iron and Steel Products.
D. ASTM A312 - Seamless and Welded Austenitic Stainless Steel Pipe.
E. ASTM B221 - Aluminum-Alloy Extruded Bar, Rod, Wire, Shape, and Tube.

1.05 PERFORMANCE REQUIREMENTS

A. Flagpoles With Flag Flying: Resistant without permanent deformation to 90 miles/hr wind velocity; non-resonant, safety design factor of 2.5 .

1.06 SUBMITTALS

A. Submit under provisions of Section 01300
B. Shop Drawings: Indicate detailed dimensions, base [attachment details, anchor requirements, and imposed loads.
C. Product Data: Provide data on pole, accessories, and configurations.
D. Samples: Submit two samples 12 inch in size illustrating pole material, color, and finish.

1.07 OPERATION AND MAINTENANCE DATA

A. Submit under provisions of Section 01600.
B. Operation Data: Provide operating data.
C. Maintenance Data: Provide lubrication and periodic maintenance requirement schedules.

1.08 QUALIFICATIONS

A. Design flagpole foundation and supports under direct supervision of a Professional Structural Engineer experienced in design of this Work and licensed [at the place where the Project is located in the State of Texas.

1.09 REGULATORY REQUIREMENTS

A. Products Requiring Electrical Connection: Listed and classified by [Underwriters' Laboratories, Inc.,] [testing firm acceptable to the authority having jurisdiction] as suitable for the purpose specified and indicated.

1.10 DELIVERY, STORAGE, AND HANDLING

A. Deliver, store, protect and handle products to site under provisions of Section 01600.
B. Spiral wrap flagpole with protective covering and pack in protective shipping tubes or containers.
C. Protect flagpole and accessories from damage or moisture.

PART 2 PRODUCTS

2.01 MANUFACTURERS

A. Concord Industries, Inc. fabricated from seamless extruded tuning, complying with ASTM Bs41, alloy 6063-T6, having a minimum thickness of .125", tensile strength of not minimum than 3,000 psi and yield point of 25,000 psi. with the following configuration:
1 Outside Butt Diameter: 6.0 inches.
2 Outside Tip Diameter: 3.5 inches.
3. Nominal Wall Thickness: .156 inch.
4. Nominal Height: 30 ft; measured from top of base.
5. Flagpole: Ground mounted type
6. Flagpole Design: Cone tapered
7. Halyard: Conceald.
8. Aluminum: 6063 alloy, T6 aluminum tubing.

B. Other approved manufacturer's:
American Flagpole Div., of Kearney-National, Inc.
Acme Flagpole Div., Lingo Inc.
Eder Flag Manufacturing Co.
C. Substitutions: Under provisions of Section 01600

2.04 COMPONENTS AND ACCESSORIES

A.	Finial:	Aluminum 5 inches in diam.
C.	Flag design:	60 x 96 size, Polyester fabric, hemmed edges. Verify w/ client flag content.
D.	Cleats:	9 inch size, stainless steel with galvanized steel fastenings, two per halyard.
E.	Cleat Box:	Aluminum, with built-in hinge and hasp assembly, attached to pole with tamper proof screws inside box.
F.	Halyard:	One set of #10 (5/16 inch) diameter polypropylene, chrome swivel snaps to secure flag
H.	Counterbalance:	One 3 1/2 inch Neoprene coated.
I.	Primer:	Zinc chromate type.
J.	Flash Collar:	FC-121

2.05 OPERATOR

A. Hand Crank.

2.06 MOUNTING COMPONENTS

A. Foundation Tube Sleeve: AASHTO M-36, corrugated 16 gage, galvanized steel
B. Collar and Pole Base Attachment: Flush collar and pole base Sleeve; aluminum.
C. Wall Support Assembly: Aluminum ; round ; one piece assembly, back-plate for through bolting, with galvanized.
D. Outrigger Wall Support Assembly: Plain type, of same material as flagpole with through wall anchorages, mounting plates, and brace.
F. Lightning Ground Cable: Copper No. 6 AWG, soft drawn.

2.07 FINISHES

A.	Metal Surfaces in Contact With Concrete:	Asphaltic paint.
B.	Concealed Steel Surfaces:	Prime painted
C.	Exposed to View Steel Surfaces:	Field painted, color as selected.
D.	Color:	Duronodic #335 Black
H.	Finial: 14 Ga. Aluminum.	

PART 3 EXECUTION

3.01 EXAMINATION

A. Verify site conditions under provisions of Section 01039.
B. Verify that concrete foundation is ready to receive work and dimensions are as indicated on shop drawings.

3.02 PREPARATION

A. Coat metal sleeve surfaces below grade and surfaces in contact with dissimilar materials with asphaltic paint.

3.03 INSTALLATION

A. Install flagpole, base assembly, and fittings in accordance with manufacturer's instructions.
B. Fill foundation tube sleeve with concrete specified in Section 03300.

C. Install foundation plate and centering wedges and/or welded base assembly for flagpoles base set in concrete base and fasten.
D. Coordinate installation of conduit and boxes from disconnect to control unit and control unit to motor operating device.

3.04 ERECTION TOLERANCES

A. Maximum Variation From Plumb: 1 inch.

3.05 ADJUSTING

A. Adjust work under provisions of Section 01700.
B. Adjust operating devices so that halyard and flag function smoothly.

END OF SECTION

SECTION 10419

DIMENSIONAL LETTER SIGNAGE

PART 1 - GENERAL

1.01 RELATED DOCUMENTS

Drawings and general provisions of the Contract, including General and Supplementary Conditions and Division 01 Specification Sections, apply to this Section.

1.02 SUMMARY

Section Includes:

Fabricated channel dimensional characters, see drawings.

1.03 DEFINITIONS

Illuminated: Illuminated by lighting source integrally constructed as part of the sign unit.

1.04 COORDINATION

Furnish templates for placement of electrical service embedded in permanent construction by other installers.

1.05 ACTION SUBMITTALS

Product Data: For each type of product.

Shop Drawings: For dimensional letter signs.

Include fabrication and installation details and attachments to other work.

1. Show sign mounting heights, locations of supplementary supports to be provided by others, and accessories.
2. Show message list, typestyles, graphic elements, and layout for each sign at least, insert scale.
3. Show locations of electrical service connections.
4. Include diagrams for power, signal, and control wiring.

Samples for Verification: For each type of sign assembly showing all components and with the required finishes, in manufacturer's standard size unless otherwise indicated and as follows:

Dimensional Characters: Full-size Sample of each type of dimensional character.

5. Exposed Accessories: Full-size Sample of each accessory type.

Sign Schedule: Use same designations specified or indicated on Drawings or in a sign schedule.

Include structural analysis calculations for signs indicated to comply with design loads; signed and sealed by the qualified professional engineer responsible for their preparation.

1.06 CLOSEOUT SUBMITTALS

Maintenance Data: For signs to include in maintenance manuals.

1.07 QUALITY ASSURANCE

Installer Qualifications: [Manufacturer of products] [An entity that employs installers and supervisors who are trained and approved by manufacturer].

1.08 FIELD CONDITIONS

Field Measurements: Verify locations of electrical service embedded in permanent construction by other installers by field measurements before fabrication, and indicate measurements on Shop Drawings.

1.09 WARRANTY

Special Warranty: Manufacturer agrees to repair or replace components of signs that fail in materials or workmanship within specified warranty period.

Failures include, but are not limited to, the following:

Deterioration of finishes beyond normal weathering.

a. Separation or delamination of sheet materials and components.

Warranty Period: Five years from date of Substantial Completion.

PART 2 - PRODUCTS

2.01 PERFORMANCE REQUIREMENTS

Delegated Design: Engage a qualified professional engineer, as defined in Section 01 40 00 "Quality Requirements," to design sign structure and anchorage of [rooftop] [dimensional character] <Insert description> sign type(s) <Insert drawing designation of sign(s)> to withstand design loads [as indicated on Drawings] <Insert loads>.

A. Thermal Movements: For exterior **fabricated channel dimensional characters,** allow for thermal movements from ambient and surface temperature changes.

Temperature Change: 120 deg F**, ambient;** 180 deg F**, material surfaces.**

2.02 DIMENSIONAL CHARACTERS

Fabricated Channel Characters, see drawings: Translucent face with 9” metal side returns, formed free from warp and distortion; with uniform faces, sharp corners, and precisely formed lines and profiles; internally braced for stability and for securing fasteners; and as follows.

Character Material: Sheet or plate stainless steel .

1. Material Thickness: As per Sun Metro Logo standard for size and design of character.
2. Translucent Face Sheet: Acrylic sheet, as per Sun Metro logo and previous Sun Metro installation, and with integral color matching Architect's sample.
3. Character Height: As indicated.
4. Character Depth: As indicated.
5. Finishes:

   Integral Stainless-Steel Finish: No. 4.

Typeface: As per Sun Metro Logo.

2.03 DIMENSIONAL CHARACTER MATERIALS

Stainless-Steel Sheet: ASTM A 240/A 240M or ASTM A 666, Type 304, stretcher-leveled standard of flatness.

A. Paints and Coatings for Sheet Materials: Inks, dyes, and paints that are recommended by manufacturer for optimum adherence to surface and are UV and water resistant for colors and exposure indicated.

2.04 ACCESSORIES

Fasteners and Anchors: Manufacturer's standard as required for secure anchorage of signage, noncorrosive and compatible with each material joined, and complying with the following:

For exterior exposure, furnish **stainless-steel** devices unless otherwise indicated.

1. Exposed Metal-Fastener Components, General:

   Fabricated from same basic metal and finish of fastened metal unless otherwise indicated.

   a. Fastener Heads: For nonstructural connections, use f**lathead or oval countersunk. Sc**rews and bolts with tamper-resistant **Allen-head.**

B. Two-Face Tape: Manufacturer's standard high-bond, foam-core tape, 0.045 inch thick, with adhesive on both sides.

C. Bituminous Paint: Cold-applied asphalt emulsion complying with ASTM D 1187.

2.05 FABRICATION

General: Provide manufacturer's standard sign assemblies according to requirements indicated.

Preassemble signs and assemblies in the shop to greatest extent possible. Disassemble signs and assemblies only as necessary for shipping and handling limitations. Clearly mark units for reassembly and installation; apply markings in locations concealed from view after final assembly.

1. Mill joints to a tight, hairline fit. Form assemblies and joints exposed to weather to resist water penetration and retention.
2. Comply with AWS for recommended practices in welding and brazing. Provide welds and brazes behind finished surfaces without distorting or discoloring exposed side. Clean exposed welded and brazed connections of flux, and dress exposed and contact surfaces.
3. Conceal connections if possible; otherwise, locate connections where they are inconspicuous.
4. Internally brace signs for stability and for securing fasteners.
5. Provide rebates, lugs, and brackets necessary to assemble components and to attach to existing work. Drill and tap for required fasteners. Use concealed fasteners where possible; use exposed fasteners that match sign finish.
6. Castings: Fabricate castings free of warp, cracks, blowholes, pits, scale, sand holes, and other defects that impair appearance or strength. Grind, wire brush, sandblast, and buff castings to remove seams, gate marks, casting flash, and other casting marks before finishing.

2.06 GENERAL FINISH REQUIREMENTS

Protect mechanical finishes on exposed surfaces from damage by applying a strippable, temporary protective covering before shipping.

A. Appearance of Finished Work: Noticeable variations in same piece are not acceptable. Variations in appearance of adjoining components are acceptable if they are within the range of approved Samples and are assembled or installed to minimize contrast.

B. Directional Finishes: Run grain with long dimension of each piece and perpendicular to long dimension of finished trim or border surface unless otherwise indicated.

2.07 STAINLESS-STEEL FINISHES

Surface Preparation: Remove tool and die marks and stretch lines, or blend into finish.

A. Polished Finishes: Grind and polish surfaces to produce uniform finish, free of cross scratches.

When polishing is completed, passivate and rinse surfaces. Remove embedded foreign matter and leave surfaces chemically clean.

1. Directional Satin Finish: No. 4.
2. Dull Satin Finish: No. 6.

3. Reflective, Directional Polish: No. 7.

PART 3 - EXECUTION

3.01 EXAMINATION

Examine substrates, areas, and conditions, with Installer present, for compliance with requirements for installation tolerances and other conditions affecting performance of signage work.

A. Verify that sign-support surfaces are within tolerances to accommodate signs without gaps or irregularities between backs of signs and support surfaces unless otherwise indicated.

B. Verify that electrical service is correctly sized and located to accommodate signs.

C. Proceed with installation only after unsatisfactory conditions have been corrected.

3.02 INSTALLATION

General: Install signs using mounting methods indicated and according to manufacturer's written instructions.

Install signs level, plumb, true to line, and at locations and heights indicated, with sign surfaces free of distortion and other defects in appearance.

1. Before installation, verify that sign surfaces are clean and free of materials or debris that would impair installation.
2. Corrosion Protection: Coat concealed surfaces of exterior aluminum in contact with grout, concrete, masonry, wood, or dissimilar metals, with a heavy coat of bituminous paint.

Mounting Methods:

Two-Face Tape: Clean bond-breaking materials from substrate surface and remove loose debris. Apply tape strips symmetrically to back of sign and of suitable quantity to support weight of sign without slippage. Keep strips away from edges to prevent visibility at sign edges. Place sign in position, and push to engage tape adhesive.

3.03 ADJUSTING AND CLEANING

Remove and replace damaged or deformed characters and signs that do not comply with specified requirements. Replace characters with damaged or deteriorated finishes or components that cannot be successfully repaired by finish touchup or similar minor repair procedures.

A. Remove temporary protective coverings and strippable films as signs are installed.

B. On completion of installation, clean exposed surfaces of signs according to manufacturer's written instructions, and touch up minor nicks and abrasions in finish. Maintain signs in a clean condition during construction and protect from damage until acceptance by Owner.

END OF SECTION 101419

SECTION 10442
METAL DIMENSIONAL LETTERS AND CAST PLAQUE

PART 1 GENERAL

1.1 SECTION INCLUDES

A. Metal Dimensional Letters and Cast Plaque - Dedication Plaque.

1.2 RELATED SECTIONS

A. Section 03450 Architectural Precast Concrete.
B. Section 05400 Metal Stud Framing
C. Section 06110 Wood Blocking
D. Section 07420 Solid Cladding System
E. Section 09220 Portland cement Plaster
F. Section 09900 Painting

1.3 SUBMITTALS

A. Submit under provisions of Section 01300. Submit a full scale detailed drawing of plaque to be cast, illustrating type, style, locations, overall dimensions. Shop Drawings: Indicate sign styles, lettering font, foreground and background colors, locations, overall dimensions of each. Samples: Submit one sample letter, of each scheduled size, illustrating type, style, letter font, and colors available, method of attachment. Manufacturer's Installation Instructions: Include installation template and attachment devices.

1.4 QUALIFICATIONS

A. Manufacturer: Company specializing in manufacturing the Products specified in this section with minimum three years documented experience.

1.5 DELIVERY, STORAGE, AND HANDLING

A. Deliver, store, protect and handle products to site under provisions of Section 01600.
B. Package signs, labeled in name groups.

PART 2 PRODUCTS

2.1 METAL DIMENSIONAL LETTER AND CAST PLAQUE MANUFACTURERS

A. Manufacturers of dimensional letters:
A.R.K. Ramos or Equal.
B. Substitutions: Under provisions of Section 01631.

2.2 METAL DIMENSIONAL LETTERS

1. Cast Metal Letters; No. 535 Arial regularas manufactured by ARK Ramos or equal. Height - 16", Stroke – 2-5/16”, Depth – 1”. Polished aluminum.
2. Cast Metal Letters; No. 521 Helvetica Medium as manufactured by ARK Ramos or equal. Height - 6", Stroke – 1 1/8”, Depth – 1/2”.
3. Mounting - Projected Mounting (PM-1) with collars and threaded studs set in adhesive, to be mounted on concrete..
4. Finish – Polished aluminum

5. Refer to drawings for location.

2.3 CAST PLAQUE

1. Satin Aluminum - 24" WIDE X 18" HIGH with raised and engraved lettering with recessed graphics. Mounting - Concealed mounting, to be mounted on metal stud or cmu or concrete wall. Plaque content to be supplied by architect. Refer to drawings for location.

PART 3 EXECUTION

3.1 EXAMINATION

A. Verify that substrate surfaces are ready to receive work.

3.2 INSTALLATION

A. Install in accordance with manufacturer's instructions.
B. Install signs after surfaces are finished, in locations scheduled.

3.3 SCHEDULES

A. Provide Dimensional Letters as Follows:

1. “NORTHGATE TRANSFER CENTER” Locate 16” letters to be located as indicated on drawings.

B. Dedication Plaque to be located as per architect instructions. Verify location with architect.

END OF SECTION

SECTION 10522
FIRE EXTINGUISHERS, CABINETS, AND ACCESSORIES

PART 1 GENERAL

1.01 SECTION INCLUDES

A. Fire extinguishers.
B. Cabinets.
C. Accessories.

1.02 PRODUCTS FURNISHED BUT NOT INSTALLED UNDER THIS SECTION

A. Section 04300 Unit Masonry: Placement of rough-in frame for cabinets.

1.03 RELATED SECTIONS

A. Section 06112 - Framing and Sheathing: Wood blocking and shims.
B. Section 04300 Unit Masonry: Roughed-in wall openings.
C. Section 09900 - Painting: Field paint finish.

1.04 REFERENCES

A. ANSI/NFPA 10 - Portable Fire Extinguishers.
B. ANSI/UL 92 - Fire Extinguisher and Booster Hose.
C. NSI/UL 711 - Rating and Fire Testing of Fire Extinguishers.
D. UL 8 - Foam Fire Extinguishers.
E. UL 154 - Carbon Dioxide Fire Extinguishers.
F. UL 299 - Dry Chemical Fire Extinguishers.
G. UL 626 - 2 1/2 Gallon Stored Pressure, Water Type Fire Extinguishers.
H. UL 1093 - Halogenated Agent Fire Extinguishers.

1.05 SUBMITTALS

A. Submit under provisions of Section 01300.
B. Shop Drawings: Indicate cabinet physical dimensions, rough-in measurements for semi-recessed cabinets and wall bracket mounted measurements location.
C. Product Data: Provide extinguisher operational features, color and finish, anchorage details.
D. Manufacturer's Installation Instructions: Indicate special criteria and wall opening coordination requirements.
E. Manufacturer's Certificate: Certify that Products meet or exceed specified requirements.

1.06 OPERATION AND MAINTENANCE DATA

A. Submit under provisions of Section 01700.
B. Maintenance Data: Include test, refill or recharge schedules and re-certification requirements.

1.07 QUALITY ASSURANCE

A. Provide units conforming with ANSI/UL 711 and ANSI/UL 92.
B. Maintain one copy of document on site.

1.08 REGULATORY REQUIREMENTS

A. Conform to applicable code for requirements for extinguishers.

1.09 ENVIRONMENTAL REQUIREMENTS

A. Do not install extinguishers when ambient temperature may cause freezing of extinguisher ingredients.

PART 2 PRODUCTS

2.01 EXTINGUISHERS

A. Dry Chemical Type: UL 299, steel tank, with pressure gage; size and classification as required by local codes.

2.02 CABINETS

A. Metal: Formed sheet steel, primed; 18 gage thick base metal.
B. Configuration: Semi-recessed type, sized to accommodate accessories.
C. Trim Type: Returned to wall surface.
D. Door: 18 gage thick, reinforced for flatness and rigidity; latch access.
E. Door Glazing: Glass, clear, 1/8 inch thick float heat strengthened.
F. Cabinet Mounting Hardware: Appropriate to cabinet.

2.03 ACCESSORIES

A. Extinguisher Brackets: Formed steel, galvanized finish.
B. Extinguisher Theft Alarm: Battery operated alarm, 5 second delay for disarming, activated by opening cabinet door.
C. Graphic Identification.

2.04 FABRICATION

A. Form cabinet enclosure with right angle inside corners and seams. Form perimeter trim and door stiles.
B. Pre-drill for anchors.
C. Hinge doors for 180 degree opening with continuous piano hinge. Provide roller type catch.
D. Weld, fill, and grind components smooth.
E. Glaze doors with resilient channel gasket glazing.

2.05 FINISHES

A. Extinguisher: Steel,red
B. Cabinet Exterior Trim and Door: Primed for field paint finish.

PART 3 EXECUTION

3.01 EXAMINATION

A. Verify wall openings under provisions of Section 01039.
B. Verify rough openings for cabinet are correctly sized and located.

3.02 INSTALLATION

A. Install in accordance with manufacturer's instructions.
B. Install cabinets plumb and level in wall openings, at height determined by local Fire Marshall Guidelines from finished floor to inside bottom of cabinet.
C. Secure rigidly in place.
D. Place extinguishers on wall brackets.
E. Position cabinet signage per local Fire Marshall Guidelines.

3.03 SCHEDULES

A. See drawings for location.

END OF SECTION

SECTION 10800
BATHROOM ACCESSORIES

PART 1 GENERAL

1.01 SECTION INCLUDES

A. Bathroom accessories.
B. Grab bars.
C. Attachment hardware.

1.02 REFERENCES

A. ANSI A117.1 - Safety Standards for the Handicapped.
B. ASTM A123 - Zinc (Hot-Dip Galvanized) Coatings on Iron and Steel Products.
C. ASTM A167 - Stainless and Heat-Resisting Chromium-Nickel Steel Plate, Sheet, and Strip.
D. ASTM A269 - Seamless and Welded Austenitic Stainless Steel Tubing for General Service.

1.03 SUBMITTALS

A. Submit under provisions of Section 01300.
B. Product Data: Provide data on accessories describing size, finish, details of function, attachment methods.
C. Manufacturer's Installation Instructions: Indicate special procedures, perimeter conditions requiring special attention.

1.04 REGULATORY REQUIREMENTS

A. Conform to ANSI A117.1and Texas Accessibility Standards code for access for the handicapped.

1.05 FIELD MEASUREMENTS

A. Verify that field measurements are as indicated on product data.

1.06 COORDINATION

A. Coordinate work under provisions of Section 01039.
B. Coordinate the work with the placement of internal wall reinforcement and reinforcement of toilet partitions to receive anchor attachments.

PART 2 PRODUCTS

2.01 MANUFACTURERS

A. Bradley
B. Bobrick
C. ASI
D. McKinney
E. Substitutions: Under provisions of Section 01600.

2.02 MATERIALS

A. Sheet Steel: ASTM A366.

B. Stainless Steel Sheet: ASTM A167, Type 304.
C. Tubing: ASTM A269, stainless steel.
D. Fasteners, Screws, and Bolts: Hot dip galvanized, tamper-proof, and security type.
E. Expansion Shields: Fiber, lead, or rubber as recommended by accessory manufacturer for component and substrate.

2.03 FABRICATION

A. Weld and grind joints of fabricated components, smooth.
B. Form exposed surfaces from single sheet of stock, free of joints. Form surfaces flat without distortion. Maintain surfaces without scratches or dents.
C. Fabricate grab bars of tubing, free of visible joints, return to wall with end attachment flanges. Form bar with four inches clear of wall surface.
D. Shop assemble components and package complete with anchors and fittings.
E. Provide steel anchor plates, adapters, and anchor components for installation.

2.04 KEYING

A. Supply four keys for each accessory to Owner.
B. Master key all accessories.

2.05 FINISHES

A. Stainless Steel: All exposed metals shall be Type 304 Stainless Steel.

PART 3 EXECUTION

3.01 EXAMINATION

A. Verify site conditions under provisions of Section 01039.
B. Verify that site conditions are ready to receive work and dimensions are as indicated on shop drawings.
C. Verify exact location of accessories for installation.

3.02 PREPARATION

A. Deliver inserts and rough-in frames to site for timely installation.
B. Provide templates and rough-in measurements as required.

3.03 INSTALLATION

A. Install accessories in accordance with manufacturers' instructions and ANSI A117.1.
B. Install plumb and level, securely and rigidly anchored to substrate.

3.04 SCHEDULE

	ITEM	**BRADLEY MODEL**
1.	**Hand Dryer**	**2902 - 287300**
2.	**Soap Dispenser**	**6542**
3.	**Toilet Tissue Holder**	**R-2601**
4.	**Napkin Dispenser**	**4017-45 (25 cent)**

	ITEM	BRADLEY MODEL
5.	**Napkin Disposal**	**4781-15**
6.	**18" X 36" Mirror**	**781-4**
7.	**42" H.C. Grab Bar**	**812-001 x 42**
8.	**36" H.C. Grab Bar**	**812-001 x 36**
9.	**Trash Receptacle**	**377- 13 gallon**
10.	**Baby Changing Station**	**9611-Soild Light Grey**
11.	**Shower Rod**	**9539 1-1/4" diam**
12.	**Shower Seat**	**9591**
13.	**Shower Curtain Hooks**	**9540**
14.	**Shower Curtain**	**9533**
15.	**Utility Shelf**	**9934 - 5 hooks/ 4 holders**
16.	**Hat and Coat Rack**	**9944 - 4 hooks (Nursing Room)**
17.	**Mop and Broom Holder**	**9955 - 5 holders**

Note:

1. The above schedule is based on Bradley Model Numbers. Contractor may select comparable unit from manufacturers listed in item 2.01 above.
2. Locations for accessories above are indicated on drawings.

END OF SECTION

SECTION 10813
BIRD CONTROL DEVICES

PART 1 – GENERAL

1.1 SUMMARY

A. Design Requirements: Stainless steel bird barrier spike: Physical surface barriers. .

1.2 QUALITY ASSURANCE

A. Single Source Responsibility: Furnish products from one manufacturer for entire project.
B. Country of Origin: Product must be manufactured in the U.S.A.
C. Obtain all technical information from the manufacturer.
D. Installer to obtain; review and understand bird spike installation. Obtain from manufacturer; planning guides, worksheets and installation instructions.
E. Installer shall visit the site to gather all information on existing site conditions.

1.3 SUBMITTALS

A. Product Data: Submit manufacturer's descriptive literature and product specifications for each product including catalogs, installation instructions and other descriptive material.
B. Provide Warranty on material and installation.
C. Provide samples of each type of spike excluding proposed fastening methods.
D. Provide statement by official indicating that they are a certified installation company.

1.4 PRODUCT STORAGE AND HANDLING

A. Provide storage and /or protection to keep barrier spikes in boxes, dry, clean and undamaged. Do not stock or place other boxes or materials on top.
B. Keep barrier spikes in their original boxes until needed for installation.

1.5 PROJECT CONDITIONS

A. Coordination: Furnish samples of system(s) so installation can be coordinated with existing conditions and within on-site conditions.
C. Visit site and field-measure prior to fabrication and delivery of materials.

1.6 WARRANTY

A. Product shall carry a minimum 10 year guarantee against U.V. breakdown and stainless steel degradation.
B. Installation shall be guaranteed for 2 years.

PART 2 – PRODUCTS

2.1 ACCEPTABLE MANUFACTURER

Manufacturer:
Nixalite of America, Inc.
1025 16th. Avenue, PO Box 727, Dept. NI, East Moline, Illinois 61244
www.nixalite.com

2.2 PRODUCT DESCRIPTION

A. Model Designation: Premium Stainless Steel Model “S” Nixalite full row spike 4” high and 4” wide, 180-degree wire coverage, 48” and 24” strip lengths as needed.

2.3 MOUNTING SYSTEMS

A. To be made of stainless steel or non-corrosive materials. Standard mounting hardware is supplied with Premium Nixalite Bird Barrier Spike Models in set quantities. Mounting Hardware must allow for bird spike strip installation, removal and reinstallation without damaging the installation surface, the spike strips or the mounting system.

B. Use the Nixalite Bird Spike Mounting Hardware that best suits the installation surface. All hardware is made of either stainless steel or non-corrosive materials.

Installation Surface	Nixalite Bird Spike Mounting Hardware
Masonry, stone, concrete;	Mounting clip, sheet metal screw, masonry anchor
Wood, plywood, shingles;	Mounting clip, sheet metal screw, washer
Sheet metal, plastic, PVC;	Mounting clip, sheet metal screw, washer
Steel, cast iron, brass, bronze;	Mounting clip, drive screw, washer
Pipes, cables, conduit, grates;	Wire tie, wire tying tool, adhesive

C. Apply adhesive or sealant in all holes that penetrate the installation surface. After mounting hardware is installed, apply additional adhesive or sealant over the heads of the sheet metal screws and/or the drive screws. Do not get adhesive or sealant in the hook end of the mounting clips.

D. Optional Fastening:

Glue Clips & Adhesive:
If surface conditions do not allow for the use of the supplied Bird Spike Mounting Hardware, use the Glue Clip and Adhesive installation method. Follow the Glue Clip installation instructions available from the manufacturer.

PART 3 – EXECUTION

3.1 EXAMINATION

A. Examine the installation area and note any detrimental or hazardous work conditions. Notify contracting officer or inspector of the detrimental work conditions.
B. Do not proceed with installation until conditions are corrected.

3.2 SURFACE PREPARATION

A. Surface should be thoroughly cleaned and free of bird droppings, nesting materials, rust, peeling paint or other debris.
B. Remove or repair articles that may damage bird spike device after installation, including overhanging foliage, brush and loose parts on the structure.

3.3 INSTALLATION

A. Install spikes as recommended by the manufacturer.
B. Bird Spikes should be installed correctly, covering the entire depth of the surface, not just the perimeter see drawings for different surface depths.
1. Follow the contours and angles closely; cut or break away to fit properly.

2. Space materials in accordance with manufacturer's recommendations and according to device width.
3. If depth of wall does not meet multiples of device width, leave not less than 2 inches to the outside corner.

3.4 INSPECTION

A. Visually inspect Bird spike device for any signs of poor installation, including loose screws, fasteners and un-removed debris.
B. Immediately correct and repair as necessary.

END OF SPECIFICATIONS

SECTION 10900
ALUMINUM DECORATIVE SCREENS
(Base bid and Option 2)

PART 1 GENERAL

1.1 SECTION INCLUDES

A. Custom patern water jet cut exterior aluminum decorative screens.

B. This section applies to decorative screens in both buildings, garage and terminal.

C. This section applieas to base bid and Option 2.

C. Option 2, see sheet AG100 Options Sheet and AG402 Screen Panel Types.

1.2 RELATED SECTIONS

A. Section 01030 - Options

B. Section 01300 - Submittal Procedures

B. Section 04230 – Reinforced Concrete Masonry

C. Section 06114 - Wood Blocking.

D. Section 09220 Portland Cement Plaster.

1.3 SUBMITTALS FOR REVIEW

A. Submit under provisions of Section 01300.

B. Shop Drawings: Indicate materials, component profiles and elevations, assembly methods, joint details, fastening methods, accessory listings, hardware location and schedule of panels based on architect's supply pattern.

C. Product Data: Aluminum Sheets, angles, anchors and acrylic paint finish

D. Samples: Submit 1-4'x4' perforated panel with acrylic paint finish, including angles at ends.

1.4 DELIVERY, STORAGE, AND PROTECTION

A. Section 01600 - Material and Equipment: Transport, handle, store and protect products.
B. Protect units from moisture damage.

1.5 ENVIRONMENTAL REQUIREMENTS

A. Section 01600 - Material and Equipment: Environmental conditions affecting products on site.

PART 2 PRODUCTS

2.1 DECORATIVE SCREENS.

A. Decorative aluminum screens with powder coated finish, including angles and attachments. .

B.	Pattern:	Architect to supply custom pattern for individual sheets.
C.	Aluminum sheet thickness:	3/16”, size as per elevations.
D.	Aluminum angles:	3/16”, length as per details.
E.	Finish:	paint screens including angles with one under coat of two parts primer: 74350 SP and 74351 SP bt Matthews Paint and one oat of finish paint; Universal Catalyst 43270 SP and reducer 6300 SP, with one top coat of acrylic Polyurethane gloss by Matthews Paint. Color to be selected by architect.

2.2 MANUFACTURERS

A. Aluminum screens by ARC, Architectural Retail Solutions. El Paso, Texas-Emilio Banda

2.3 ACCESSORIES

A. Angles: as per finish instructions.

B. Anchors: Suitable for the type of wall, see drawings for location and different types of walls. .

C. Bolts, Nuts, Washers, Lags, Pins, and Screws: of size and type to suit application

2.4 FABRICATION

A. Shop assemble screens for delivery to site in units easily handled and to permit installation.

B. Prepare panels with pre-punch holes for site anchoring.

2.7 SITE FINISHING

A. No site finishing will be permitted, other minor color touches.

PART 3 EXECUTION

3.1 EXAMINATION

A. Coordination and Meetings: Verification of existing conditions before starting work.

B. Verify adequacy of backing and support framing.

C. Field verify location and sizes before fabrication.

3.2 INSTALLATION

A. Set and secure screens in place; rigid, plumb, and level.

3.3 ADJUSTING

A. Section 01400 - Quality Control: Adjust installed work. Test installed work for rigidity and ability to support load and winds.

3.4 CLEANING

A. Section 01700 - Contract Closeout: Clean screens after completing installation.

END OF SECTION

SECTION 11400

FOOD SERVICE EQUIPMENT (OFCI)

PART 1 GENERAL

1.1 SECTION INCLUDES

A. Food services equipment.
B. The equipment in this section will be “Owner Furnished Contractor Installed”

1.2 PRODUCTS INSTALLED BUT NOT FURNISHED UNDER THIS SECTION

A. Section 01010 - Summary of Work

1.3 RELATED SECTIONS

A. Section 01010 - Summary of Work: Sequence of work, schedule for placing equipment .
B. Section 07900 - Joint Sealers.
C. Electrical sections and drawings.
D. Mechanical and Plumbning sections and drawings.

1.4 REFERENCES

A. ASTM A167 - Stainless and Heat-resisting Chromium-nickel Steel Plate, Sheet and Strip.
B. ANSI/AWS D1.1 - Structural Welding Code.
C. ASTM A446 - Steel Sheet, Zinc-Coated (Galvanized) by the Hot-Dip Process, Structural (Physical) Quality.

1.5 PERFORMANCE REQUIREMENTS

A. Load Supporting Components: Reinforced frame support system and surfaces so that surfaces may safely support a load of 400 lbs concentrated on one square foot in any area on the component surface, with no indentation showing on surface, and with permanent set not exceeding 0.005 inches.

1.6 SUBMITTALS

A. Submit under provisions of Section 01300.
B. Shop Drawings: Indicate in large scale detail, fabricated equipment showing construction methods, type and gage of metal, hardware and fittings, plan front elevation, a minimum of one cross-section, and utility requirements as to types and sizes and locations. Illustrate complicated parts of typical items in cut-away perspective. For control systems, indicate service connections, characteristics, and wiring diagrams.
C. Product Data: If applicable; indicate configuration, sizes, materials, finishes, locations, and utility connections and locations.
D. Samples: Submit sample, 4” X 4” in size illustrating equipment finish.
E. Manufacturer's Installation Instructions: Indicate special procedures, perimeter conditions requiring special attention
F. Manufacturer's Certificate: Certify that Products meet or exceeds specified requirements.

1.7 OPERATION AND MAINTENANCE DATA

A. Submit under provisions of Section 01700.

B. Maintenance Data: Provide lubrication and periodic maintenance requirement schedules.

1.8 QUALIFICATIONS

A. Fabricator: Company specializing in performing the work of this section with minimum 15 years documented experience.

1.9 REGULATORY REQUIREMENTS

A. Conform to all applicable codes and ordinances for utility requirements.

1.10 PRE-INSTALLATION CONFERENCE

A. Convene a meeting with owner's representative prior to commencing work of this section.

1.11 DELIVERY, STORAGE, AND HANDLING

A. Deliver, store, protect and handle products to site under provisions of Section 01600.
B. Store products clear of floor in a manner to prevent damage.
C. Coordinate size of access and route to place of installation.

1.12 SCHEDULING

A. Schedule work under the provisions of Section 01300.
B. Schedule Work to immediately follow installation of utilities and precede installation of room finishes.

1.13 COORDINATION

A. Coordinate work under provisions of Section 01040.
B. Coordinate the work with location and placement of utilities. Coordinate characteristics of utilities with requirements of food service equipment.

1.14 WARRANTY

A. Provide five year warranty under provisions of Section 01700.
B. Warranty: Include replacement or repair of scheduled equipment.

PART 2 PRODUCTS

2.1 FABRICATORS

A. See Equipment Schedule for fabricators of kitchen equipment
B. Substitutions: Under provisions of Section 01631.

2.2 EQUIPMENT

A. Equipment Schedule: Refer to schedule at end of this section.
B. Provide all rough-in hardware, supports and connections, attachment devices, closure trim, and accessories.

2.3 MATERIALS

A. Sheet Steel: ASTM A446, 1.25 oz/sq ft galvanized coating.
B. Stainless Steel: ASTM A167, Commercial Grade Type with No. 4 finish.

C. NA
D. NA
E. Finish Hardware: Manufacturer's standard.
F. Fittings: Coordinate wit Mechanical dwgs; Sink drains with crumb cup and waste fittings, faucets, electrical outlets, etc.
G. Service Outlet Covers and Escutcheons: Stainless Steel.
H. Sealants: Silicone, bacteria resistant type.
I. NA
J. Provide indirect drain piping from equipment to terminate over nearest waste receptor, if applicable.
K. Accommodate site installation of other services or equipment.
L. Shop assemble work where possible.
M. Stainless Steel Fastenings and Fittings: Bolt and screw with countersunk flat heads at visible or accessible surfaces. Use concealed fastenings where possible.

2.4 FINISHES

A. All Components: Shop prefinish.
B. Stainless Steel: No. 4 finish.

PART 3 EXECUTION

3.1 EXAMINATION
A. Verify site conditions under provisions of Section 01040
B. Verify ventilation outlets, service connections, and supports are correct and in required location.
C. Verify that electric power is available and of the correct characteristics.

3.2 INSTALLATION
A. Install items in accordance with manufacturers' instructions.
B. Insulate to prevent electrolysis between dissimilar metals.
C. Weld and grind joints in steel work tight, without open seams, where necessary due to limitations of sheet sizes or installation requirements.
D. Sequence installation and erection to ensure correct mechanical and electrical utility connections are achieved.
E. Cut, fit, and patch where necessary. Provide cutting and patching of items of this section required for installation or services of equipment.
F. Cut and drill components for service outlets, fixtures, and fittings.
G. Use anchoring devices appropriate for equipment and expected usage.
H. Provide sealant to achieve clean joint with adjacent building finishes and between abutting components.

3.3 ADJUSTING
A. Adjust work under provisions of Section 01600.
B. Adjust equipment and apparatus to ensure proper working order and conditions.
C. Remove and replace equipment creating excessive noise or vibration.

3.4 CLEANING
A. Clean work under provisions of 01700.
B. Remove masking or protective covering from stainless steel and other finished surfaces.
C. Wash and clean equipment.
D. Polish glass, plastic, hardware and accessories, fixtures and fittings.

3.5 PROTECTION OF FINISHED WORK
A. Protect finished Work under provisions of Section 01600.
B. Remove protective coverings from prefinished work.

3.6 FOOD SERVICE SCHEDULE

	EQUIPMENT	SIZE	DESCRIPTION	MANUF.	REMARKS
1	Epoxy Coated Wire Shelving		Model EG-2424 w/ post EGPC-74, 3 truss design, each shelf shall hold up to 800 lbs. evenly distributed weight. NSF approved for all environments.	ADVANCE TABCO	Warranty:; 1 yr parts and labor
2	Ice Machine and Ice Storage Bin		Ice Machine Model No. SY-0424A, water colled, 115v, 60 hz, 1 ph, 12.9 amps, 3/4" hp compressor, with stainless steel finish.Ice Storage Bin Model B-420, 310 lbs. ice storage capacity, polyethylene exterior.	MANITOWAC ICE	Warranty 5 years parts and labor on ice machine evaporator, 5 years, 5 years labor on CME evaporator
3	Food Prep Table		Model No. TSSU-36-*, 115/60/1, 1/3 HP, 8.3 amps. Stainless Steel front, top and cabinet ends. Matching aluminum finish back. Interior - attractive, NSF approved white aluminum line. 300 series stainless steel exterior doors with white aluminum liner to match cabinet interior. Four adjustable, heavy duty PVC coated wire shelves.		
4	"Mr. Frank" Hot Dog Display Steamer		Model No. DS-1A 120 v	APW WYOTT FOOD SERVICE EQUIPMENT CO.	Warranty 1 year limited warranty
5	Soft Drink Dispenser		Model IBD 4500 GDM-19	Lancer Corp.	Manufacturer's standard warranty
6	Stainless Steel work table w/ backsplash		SS-SERIES, 304 stainless steel tops and legs, and adjustable undershelf. Provide cont 4" backsplash and work table into opening Contractor will provide, one continuos piece table top and window opening.	ADVANCE TABCO	
7	Stainless Steel work table w/ backsplash		SS-SERIES, No. SS303, 304 stainless steel tops and legs, and adjustable undershelf. Provide with drawer and 4" backsplash.	ADVANCE TABCO	
8	Stainless Steel 3 compartment sink		REGALINE SINKS -900 SERIES - Model No. 9-63-54-18L, refer to plumbing plans for description.	ADVANCE TABCO	
	Garbage Diposal		Model No. 150-SA-MSS-3, with sink/trough mount assembly, 1-1/2 HP motor, aluminum housings, single support leg, magneti, contractor w/ start/stop push button. Accessories, 1 ea. 208v, 60 Hz, 1 phase, 3-1/2" sink collar w/ sink stopper.	THE SALVAJOR CO.	

	EQUIPMENT	SIZE	DESCRIPTION	MANUF.	REMARKS
	Garbage Diposal		Model No. 150-SA-MSS-3, with sink/trough mount assembly, 1-1/2 HP motor, aluminum housings, single support leg, magneti, contractor w/ start/stop push button. Accessories, 1 ea. 208v, 60 Hz, 1 phase, 3-1/2" sink collar w/ sink stopper.	THE SALVAJOR CO.	
9	Kitchen Hood		See mechanical drawings, provide with fire suppression system. **Fire suppression system installation is not part of the owner funished equipment. The installation of the fire suppression system is part of the equipment to be installed by contractor.**		
10	Range		260L Series Restaurant gas range 60" wide gas restuarnt range, VULCAN-HART MODEL	VULCAN-HART COMPANY	Natural Gas
11	Gas Fryer		MODEL No. GHF91G, 45 lb. capacity heavy duty gas range match fryer,	VULCAN-HART COMPANY	
12	Reach-In Solid Door Refrigerator		MODEL No. T-35	TRUE FOOD SERVICE	One year warranty on all parts and labor and an additional 4 years warranty on compressso
13	Reach-In Solid Door Freezer		MODEL No. T-23F	TRUE FOOD SERVICE	One year warranty on all parts and labor and an additional 5 years warranty on compressso
14	Stainless Steel hand wash sink		Model No. 7-PS-68, One piece	ADVANCE TABCO	Warranty; 1 yr parts and labor

END OF SECTION

SECTION 12313

BICYCLE RACKS

PART 1 - GENERAL

1.01 RELATED DOCUMENTS

A. Drawings and general provisions of the Contract, including General and Supplementary Conditions and Division 01 Specification Sections, apply to this Section.

1.02 SUMMARY

Section Includes:

Bicycle racks (6), floor mounted as indicated on Drawings.

1.03 ACTION SUBMITTALS

Product Data: For each type of product.

A. Samples for Verification: For each type of exposed finish, not less than 6-inch- long linear components and 4-inch- square sheet components.

1.04 CLOSEOUT SUBMITTALS

Maintenance Data: For bicycle racks to include in maintenance manuals.

PART 2 - PRODUCTS

2.01 BICYCLE RACKS

Bicycle Rack: Belson Outdoors-Traditional Bike Rack Model BR12-P

Installation Method: Floor mounted.

Color: Storm Metallic

PART 3 - EXECUTION

3.01 EXAMINATION

A. Examine areas and conditions, with Installer present, for compliance with requirements installation tolerances, and other conditions affecting performance of the Work.

B. Proceed with installation only after unsatisfactory conditions have been corrected.

3.02 INSTALLATION, GENERAL

Comply with manufacturer's written installation instructions unless more stringent requirements are indicated. Complete field assembly of bicycle racks where required.

A. Install bicycle racks as per drawings (6), level, plumb, true, and securely anchored at locations indicated on Drawings.

B. See drawings for outdoor location

END OF SECTION

SECTION 12366

SOLID SURFACING COUNTERTOPS

PART 1 - GENERAL

1.01 SECTION INCLUDES

A. Solid surfacing countertops.

B. Adhesives and sealants.

1.02 RELATED REQUIREMENTS

A. Section 01300 - Submittals.

B. Section 01700 - Closeout Submittals.

C. Section 05500 - Metal Fabrications.

D. Section 06410 – Wood Blocking.

E. Division 15 - Plumbing Sections.

1.03 REFERENCES

A. Reference Standards: NA

1.04 SUBMITTALS

A. Submit under provisions of Section 01300 - Submittals.

B. Product Data:

1. Submit product data for each specified product. Include manufacturer's technical data sheets and published instruction instructions.

2. Submit Material Safety Data Sheets (MSDS) for adhesives and sealants.

C. Shop Drawings:

1. Submit fully dimensioned shop drawings showing countertop, layouts, joinery, terminating conditions, substrate construction, cutouts and holes. Show plumbing installation provisions. Include elevations, section details, and large scale details.

D. Samples:

1. Submit selection and verification samples for each color, pattern, and finish required.

E. Quality Assurance Submittals:

F. Maintenance Data: Submit manufacturer's published maintenance manual with closeout submittals.

1.05 REGULATORY REQUIREMENTS

A. Accessibility Requirements: Comply with the U.S. Architectural & Transportation Barriers Compliance Board ADA-ABA Accessibility Guidelines for Buildings and Facilities.

B. Adhesives, Sealants, and Sealant Primers: 1. SCAQMD (South Coast Air Quality Management District) Rule 1168.

C. Comply with TDLR requirements.

1.06 QUALITY ASSURANCE

A. Qualifications:

1. Fabricator Qualifications: Minimum of three years documented experience in fabricating solid surfacing countertops similar in scope and complexity to this Project. Currently certified by the manufacturer as an acceptable fabricator.

2. Installer Qualifications: Minimum of three years documented installation experience for projects similar in scope and complexity to this Project, and currently certified by the manufacturer as an acceptable installer. Installer shall be the fabricator.

1.07 DELIVERY, STORAGE, AND HANDLING

A. Delivery: Deliver all material protected and packaged.

B. Storage and Protection: Store materials protected from exposure to harmful weather conditions, at temperature and humidity conditions recommended by manufacturer. Store sheet materials flat on pallets or similar rack-type storage to preclude damage.

1.08 PROJECT CONDITIONS

A. Field Measurements: Verify actual measurements and openings by field measurements before fabrication; show recorded measurements on shop drawings. Coordinate field measurements and fabrication schedule with construction progress to avoid construction delays.

B. Adhesive: Acclimatize adhesives to occupancy room temperatures with maximum temperature not to exceed 75 deg F.

1.09 WARRANTY

A. Manufacturer's Limited Warranty: Provide manufacturer's standard 10 Year Commercial Limited Warranty against defects in solid surface sheet materials.

PART 2 - PRODUCTS 2.01 MANUFACTURER

A. Basis of Design: Wilsonart LLC. EDITING NOTE: Full Contact Information: Wilsonart LLC, 2400 Wilson Place, Temple, TX 76503- 6110. Tel. 254.207.7000, Toll-Free 800.433.3222, Fax

254.207.2384. Websites are: www.wilsonart.com (primary website) http://sustain.wilsonart.com (sustainable design website) EDITING NOTE: Revise mock-up size and location to suit Project requirements.

2.02 SOLID SURFACE SHEET MATERIAL

A. Acceptable Product: “Wilsonart Solid Surface.”

B. Composition: Acrylic resins, fire-retardant mineral fillers, and proprietary coloring agents. Through-the-body color for full thickness of sheet material.

C. Material Thickness: 1/2 inch, nominal.

D. Physical Characteristics: As per Wilson Art Surface” material.

E. Color, Pattern, and Finish Design: To be selected by architect.

2.03 ACCESSORY MATERIALS

A. Joint Adhesive: Methacrylate-based adhesive for chemically bonding solid surfacing seams. Color complementary to solid surfacing sheet material. UL 2818 GREENGUARD Gold certified and complies with SCAQMD Rule 1168.

1. Product: “Wilsonart Hard Surface Adhesive.”

B. Elastomeric Sealant: Mildew-resistant silicone sealant for filling gaps between countertops and terminating substrates in wet environment applications. Complies with ASTM C 920, Type S (single component), Grade NS (nonsag).

1. Product: Acceptable to countertop manufacturer.

2. Color: Complementary to solid surfacing color.

C. Siliconized Acrylic Sealant: Siliconized acrylic latex sealant. For general applications to fill gaps between countertops and at terminating substrates. Complies with ASTM C 834, Type OP, Grade NF, and SCAQMD Rule 1168.

1. Product: ”Wilsonart Color Matched Caulk”.

2. Color: Complementary to solid surfacing color.

D. Construction Adhesive: Countertop manufacturer’s recommended silicone-based construction adhesive for backsplashes, endsplashes, and other applications according to manufacturer’s published fabrication instructions.

2.05 FABRICATION

A. Fabricate components in shop, to greatest extent practicable, in sizes and shapes indicated according to approved shop drawings and Wilsonart published fabrication requirements.

B. Form joint seams between solid surfacing components with specified seam adhesive. Completed joints inconspicuous in appearance and without voids. Provide joint reinforced if required by manufacturer for particular installation conditions.

C. Provide holes and cutouts indicated on approved shop drawings. Rout cutouts and complete by sanding all edges smooth.

PART 3 - EXECUTION 3.01 EXAMINATION

A. Examine substrates and conditions that could adversely affect the work of this Section.

B. Substrates must be sound, flat, smooth, and free from dust or other surface contaminants.

C. Commencement of work will constitute acceptance of substrates and conditions to receive the work.

3.02 COUNTERTOP INSTALLATION

A. Install solid surfacing components plumb, level, and true according to approved shop drawings and manufacturer's published installation instructions. Use woodworking and specialized fabrication tools acceptable to manufacturer.

B. Form joint seams with specified seam adhesive. Seams to be inconspicuous in completed work. Seams in locations shown on approved shop drawings and acceptable to manufacturer. Promptly remove excess adhesive.

C. Provide minimum 1/2 inch radius for countertop inside corners.

D. Fill gaps between countertop and terminating substrates with specified silicone sealant.

E. if applicable rout sink cutouts to manufacturer's template. Adhere solid surface cast sink units to countertops with specified adhesive.

F. Install backsplashes and endsplashes where indicated on Drawings. Adhere to countertops with specified construction adhesive.

3.03 REPAIRS

A. If permissible to Architect, minor surface marring for solid surfacing components may be repaired according to manufacturer's published installation instructions.

B. Remove and replace solid surfacing components that are damaged and cannot be satisfactorily repaired.

3.05 CLEANING AND PROTECTION

A. Clean solid surfacing components according to manufacturer's published maintenance instructions. Completely remove excess adhesives and sealants from finished surfaces.

B. Protect completed work from damage during remainder of construction period.

3.06 SCHEDULE

A. See drawings.

END OF SECTION 12 3661

SECTION 12413

ROLLER WINDOW SHADES

PART 1 - GENERAL

1.01 RELATED DOCUMENTS

A. Drawings and general provisions of the Contract, including General and Supplementary Conditions and Division 01 Specification Sections, apply to this Section.

1.02 SUMMARY

Section Includes:

Manually operated roller shades with single rollers . Locations include the following:

Offices.
a. Dispatch.
b. Where indicated on Drawings.

Motor-operated roller shades with double rollers. Locations include the following:

Community Room, Security Office and Operator Day Room.

1.03 ACTION SUBMITTALS

Product Data: For each type of product.

Include styles, material descriptions, construction details, dimensions of individual components and profiles, features, finishes, and operating instructions for roller shades.

Shop Drawings: Show fabrication and installation details for roller shades, including shadeband materials, their orientation to rollers, and their seam and batten locations.

Manually-Operated Shades

Samples for Verification: For each type of roller shade.

Shadeband Material: Not less than 10 inches square. Mark inside face of material if applicable.
1. Roller Shade: Full-size operating unit, not less than 16 inches wide by 36 inches long for each type of roller shade indicated.
2. Installation Accessories: Full-size unit, not less than 10 inches long.

1.04 INFORMATIONAL SUBMITTALS

Qualification Data: For Installer.

A. Product Test Reports: For each type of shadeband material, for tests performed by manufacturer and witnessed by a qualified testing agency or a qualified testing agency.

1.05 CLOSEOUT SUBMITTALS

Maintenance Data: For roller shades to include in maintenance manuals.

1.06 QUALITY ASSURANCE

Installer Qualifications: Fabricator of products.

1.07 DELIVERY, STORAGE, AND HANDLING

A. Deliver roller shades in factory packages, marked with manufacturer, product name, and location of installation using same designations indicated on Drawings.

1.08 FIELD CONDITIONS

A. Environmental Limitations: Do not install roller shades until construction and finish work in spaces, including painting, is complete and dry and ambient temperature and humidity conditions are maintained at the levels indicated for Project when occupied for its intended use.

B. Field Measurements: Where roller shades are indicated to fit to other construction, verify dimensions of other construction by field measurements before fabrication and indicate measurements on Shop Drawings. Allow clearances for operating hardware of operable glazed units through entire operating range. Notify Owner of installation conditions that vary from Drawings. Coordinate fabrication schedule with construction progress to avoid delaying the Work.

PART 2 - PRODUCTS

2.01 MANUFACTURERS

A. Source Limitations: Obtain roller shades from single source from single manufacturer.

2.02 MANUALLY OPERATED SHADES WITH SINGLE ROLLERS

Chain-and-Clutch Operating Mechanisms: With continuous-loop bead chain and clutch that stops shade movement when bead chain is released; permanently adjusted and lubricated.

Bead Chains: Nickel-plated metal or Stainless steel.

Loop Length: Full length of roller shade .
a. Limit Stops: Provide upper and lower ball stops.
b. Chain-Retainer Type: Chain tensioner, jamb mounted.

Rollers: Corrosion-resistant steel or extruded-aluminum tubes of diameters and wall thicknesses required to accommodate operating mechanisms and weights and widths of shadebands indicated without deflection. Provide with permanently lubricated drive-end assemblies and idle-end assemblies designed to facilitate removal of shadebands for service.

Direction of Shadeband Roll: Regular, from back of roller.
2. Shadeband-to-Roller Attachment: Removable spline fitting integral channel in tube.

Mounting Hardware: Brackets or endcaps, corrosion resistant and compatible with roller assembly, operating mechanism, installation accessories, and mounting location and conditions indicated.

B. Shadebands:

Shadeband Material: Light-filtering fabric.
1. Shadeband Bottom (Hem) Bar: Steel or extruded aluminum.

Type: Enclosed in sealed pocket of shadeband material.

Installation Accessories:

Front Fascia: Aluminum extrusion that conceals front and underside of roller and operating mechanism and attaches to roller endcaps without exposed fasteners.

Shape: L-shaped.
a. Height: Manufacturer's standard height required to conceal roller and shadeband when shade is fully open.

Exposed Headbox: Rectangular, extruded-aluminum enclosure including front fascia, top and back covers, endcaps, and removable bottom closure.

Height: Manufacturer's standard height required to enclose roller and shadeband when shade is fully open.

Endcap Covers: To cover exposed endcaps.
2. Recessed Shade Pocket: Rectangular, extruded-aluminum enclosure designed for recessed ceiling installation; with front, top, and back formed as one piece, end plates, and removable bottom closure panel.

Height: Manufacturer's standard height required to enclose roller and shadeband when shade is fully open.
a. Provide pocket with lip at lower edge to support acoustical ceiling panel.

Closure Panel and Wall Clip: Removable aluminum panel designed for installation at bottom of site-constructed ceiling recess or pocket and for snap-in attachment to wall clip without fasteners.

Closure-Panel Width: As indicated on Drawings .

Installation Accessories Color and Finish: As selected from manufacturer's full range.

2.03 MANUALLY-OPERATED SHADES WITH DOUBLE-ROLLER SHADES

Chain-and-Clutch Operating Mechanisms: With continuous-loop bead chain and clutch that stops shade movement when bead chain is released; permanently adjusted and lubricated.

Bead Chains: Nickel-plated metal or Stainless steel.

Loop Length: Full length of roller shade .
a. Limit Stops: Provide upper and lower ball stops.
b. Chain-Retainer Type: Chain tensioner, jamb mounted.

Rollers: Corrosion-resistant steel or extruded-aluminum tubes of diameters and wall thicknesses required to accommodate operating mechanisms and weights and widths of shadebands indicated without deflection. Provide with permanently lubricated drive-end assemblies and idle-end assemblies designed to facilitate removal of shades for service.

Double-Roller Mounting Configuration: Offset, outside shade over and inside shade under.
2. Inside Roller:

Direction of Shadeband Roll: Regular, from back of roller.

Outside Roller:

Direction of Shadeband Roll: Regular, from back of roller.

Shadeband-to-Roller Attachment: Removable spline fitting integral channel in tube.

Mounting Hardware: Brackets or endcaps, corrosion resistant and compatible with roller mounting configuration, roller assemblies, operating mechanisms, installation accessories, and installation locations and conditions indicated.

B. Inside Shadebands:

Shadeband Material: Light-filtering fabric.
1. Shadeband Bottom (Hem) Bar: Steel or extruded aluminum.

Type: Enclosed in sealed pocket of shadeband material.

Outside Shadebands:

Shadeband Material: Light-blocking fabric.

2. Shadeband Bottom (Hem) Bar: Steel or extruded aluminum.

Type: Enclosed in sealed pocket of shadeband material.

Installation Accessories:

Recessed Shade Pocket: Rectangular, extruded-aluminum enclosure designed for recessed ceiling installation; with front, top, and back formed as one piece, end plates, and removable bottom closure panel.

Height: Manufacturer's standard height required to enclose roller and shadeband when shade is fully open.

a. Provide pocket with lip at lower edge to support acoustical ceiling panel.

Side Channels: With light seals and designed to eliminate light gaps at sides of shades as shades are drawn down. Provide side channels with shadeband guides or other means of aligning shadebands with channels at tops.

3. Installation Accessories Color and Finish: As selected from manufacturer's full range.

2.04 SHADEBAND MATERIALS

Shadeband Material Flame-Resistance Rating: Comply with NFPA 701. Testing by a qualified testing agency. Identify products with appropriate markings of applicable testing agency.

A. Light-Filtering Fabric - SH-1: Woven fabric, stain and fade resistant.

Type: PVC-coated polyester .

1. Weave: Basketweave.
2. Thickness: Not less than 0.018 inch.
3. Roll Width: Not less than 84 inches.
4. Orientation on Shadeband: Up the bolt.
5. Openness Factor: 3 percent.
6. Color: Match Owner's sample indicated on Drawing's Interior Material Legend.

Light-Blocking Fabric - SH-2: Opaque fabric, stain and fade resistant.

Type: Fiberglass with acrylic backing.

7. Thickness: Not less than 0.018 inch.
8. Roll Width: Not less than 84 inches.
9. Openness Factor: 0 percent (opaque).
10. Orientation on Shadeband: Up the bolt.
11. Color: Match Owner's sample indicated on Drawings's Interior Material Legend.

2.05 ROLLER-SHADE FABRICATION

Product Safety Standard: Fabricate roller shades to comply with WCMA A 100.1, including requirements for flexible, chain-loop devices; lead content of components; and warning labels.

A. Unit Sizes: Fabricate units in sizes to fill window and other openings as follows, measured at 74 deg F:

Outside of Jamb Installation: Width and length as indicated, with terminations between shades of end-to-end installations at centerlines of mullion or other defined vertical separations between openings.

Shadeband Fabrication: Fabricate shadebands without battens or seams to extent possible except as follows:

Vertical Shades: Where width-to-length ratio of shadeband is equal to or greater than 1:4, provide battens and seams at uniform spacings along shadeband length to ensure shadeband tracking and alignment through its full range of movement without distortion of the material.

PART 3 - EXECUTION

3.01 EXAMINATION

A. Examine substrates, areas, and conditions, with Installer present, for compliance with requirements for installation tolerances, operational clearances, accurate locations of connections to building electrical system, and other conditions affecting performance of the Work.

B. Proceed with installation only after unsatisfactory conditions have been corrected.

3.02 ROLLER-SHADE INSTALLATION

Install roller shades level, plumb, and aligned with adjacent units according to manufacturer's written instructions.

Opaque Shadebands: Located so shadeband is not closer than 2 inches to interior face of glass. Allow clearances for window operation hardware.

Electrical Connections: Connect motor-operated roller shades to building electrical system.

3.03 ADJUSTING

Adjust and balance roller shades to operate smoothly, easily, safely, and free from binding or malfunction throughout entire operational range.

3.04 CLEANING AND PROTECTION

Clean roller-shade surfaces after installation, according to manufacturer's written instructions.

A. Provide final protection and maintain conditions, in a manner acceptable to manufacturer and Installer, that ensure that roller shades are without damage or deterioration at time of Substantial Completion.

B. Replace damaged roller shades that cannot be repaired, in a manner approved by Owner, before time of Substantial Completion.

3.05 DEMONSTRATION

Engage a factory-authorized service representative to train Owner's maintenance personnel to adjust, operate, and maintain motor-operated roller shades.

END OF SECTION 12 24 13

SECTION 12500
INTERIOR PUBLIC SEATING

PART 1 - GENERAL

1.01 RELATED DOCUMENTS

A. Drawings and general provisions of the Contract, including General and Supplementary Conditions and Division 01 Specification Sections, apply to this Section.

1.02 SUMMARY

A. This Section includes the following:

Public Seating.

1.03 SUBMITTALS

A. Product Data: For each type of product indicated.

B. Samples for Initial Selection: Only for substitutions.

C. Samples for Verification: NA

1. Size: Not less than 6-inch- long linear components and 4-inch- square sheet components.

D. Product Schedule: For site furnishings. Use same designations indicated on Drawings or approved equal.

E. Maintenance Data: For site furnishings to include in maintenance manuals.

1.04 QUALITY ASSURANCE

A. Source Limitations: Obtain each type of site furnishing(s) through one source from a single manufacturer.

PART 2 - PRODUCTS

2.01 MATERIALS

A. Seating, by Arconas, bernu-aero with Cantilevere Arms. Grade A Vinyl Sealskin.
B. See drawings for configuration.

2.02 FINISHES, GENERAL

A. Comply with NAAMM's "Metal Finishes Manual for Architectural and Metal Products" for recommendations for applying and designating finishes.

B. Appearance of Finished Work: Variations in appearance of abutting or adjacent pieces are acceptable if they are within one-half of the range of approved Samples. Noticeable variations in the same piece are not acceptable. Variations in appearance of other components are acceptable if they are within the range of approved Samples and are assembled or installed to minimize contrast.

2.03 FINISHES

A. As per model

PART 3 - EXECUTION

3.01 EXAMINATION

A. Examine areas and conditions, with Installer present, for compliance with requirements for correct and level finished grade, mounting surfaces, installation tolerances, and other conditions affecting performance.

1. Proceed with installation only after unsatisfactory conditions have been corrected.

3.02 INSTALLATION, GENERAL

A. Comply with manufacturer's written installation instructions unless more stringent requirements are indicated. Complete field assembly of site furnishings where required.

B. Unless otherwise indicated, install site furnishings after landscaping and paving have been completed.

C. Install site furnishings level, plumb, true, and securely anchored and positioned at locations indicated on Drawings.

3.03 CLEANING

A. After completing site furnishing installation, inspect components. Remove spots, dirt, and debris. Repair damaged finishes to match original finish or replace component.

END OF SECTION

SECTION 12930
SITE FURNISHINGS

PART 1 - GENERAL

1.01 RELATED DOCUMENTS

A. Drawings and general provisions of the Contract, including General and Supplementary Conditions and Division 01 Specification Sections, apply to this Section.

1.02 SUMMARY

A. This Section includes the following:

1. Trash Receptacles.
2. Tree Grates
3. Truncated Domes
4. Metal Railing Fence
5. Trench Grate
6. Rockwall
7. Concrete Formliner

B. Related Sections include the following:

1. Division 03 Section "Cast-in-Place Concrete" for installation of cdomponents in concrete.
2. Division 31 Section "Earth Moving" for excavation for installation of concrete footings.

1.03 SUBMITTALS

A. Product Data: For each type of product indicated.

B. Samples for Initial Selection: Only for substitutions.

C. Samples for Verification: For each type of exposed finish required, prepared on Samples of size indicated below.

1. Size: Not less than 6-inch- long linear components and 4-inch- square sheet components.
2. 2ft X 2ft. sample of formliner concrete
3. Shop Drawings of concrete walls and clock tower
4. Sample of formed concrete with and without formliner utilizing proposed forms showing tie holes, joints and finish.

D. Product Schedule: For site furnishings. Use same designations indicated on Drawings or approved equal.

E. Maintenance Data: For site furnishings to include in maintenance manuals.

1.04 QUALITY ASSURANCE

A. Source Limitations: Obtain each type of site furnishing(s) through one source from a single manufacturer.

PART 2 - PRODUCTS

2.01 MATERIALS

A. Recycled Content of Steel and Aluminum Products: Provide products with an average recycled content of steel or aluminum products so postconsumer recycled content plus one-half of preconsumer recycled content is not less than 25 percent..

B. Anchors, Fasteners, Fittings, and Hardware: Manufacturer's standard, corrosion-resistant-coated or noncorrodible materials; commercial quality, tamperproof, vandal and theft resistant, concealed, recessed, and capped or plugged.

1. Angle Anchors: For inconspicuously bolting legs of site furnishings to below-grade substrate; extent as indicated.

C. Nonshrink, Nonmetallic Grout: Premixed, factory-packaged, nonstaining, noncorrosive, nongaseous grout complying with ASTM C 1107; recommended in writing by manufacturer, for exterior applications.

D. Erosion-Resistant Anchoring Cement: Factory-packaged, nonshrink, nonstaining, hydraulic-controlled expansion cement formulation for mixing with potable water at Project site to create pourable anchoring, patching, and grouting compound; resistant to erosion from water exposure without needing protection by a sealer or waterproof coating; recommended in writing by manufacturer, for exterior applications.

E. Basis-of-Design Product: Subject to compliance with requirements, provide:

1. Trash Receptacle
    1. Model: The Park; #144-1879; 1.800.230.1932
    2. Mounting: Surface mount.
    3. Color: Black Powder Coat/transparent panels

F. Basis-of-Design Product: Subject to compliance with requirements, provide:

1. Tree Grate
    1. Model: Oblio; Iron Age Design, 1.877.418.3568.
    2. Style: 5 foot Square with angle cast in place frame
    3. Mounting: Surface mount.
    4. Color: natural finish

G. Basis-of-Design Product: Subject to compliance with requirements, provide:

1. Truncated Domes
    1. Model: Wet Set ADA Tactile Warning, ADA Solutions, 1.800.372.0519
    2. Style: 8-bolt location, 24 in x 36 in.
    3. Mounting: Surface Mount imbed
    4. Color: yellow

H. Basis-of-Design Product: Subject to compliance with requirements, provide:

1. Metal Railing Fence

    1. Model: AEGIS II Genesis 3 Rail, AMERISTAR 1.888.333.3422
    2. Style: 3 Rail/ 6 foot tall/no adornment
    3. Mounting: Concrete Footing
    4. Color: Black,

I. Basis-of-Design Product: Subject to compliance with requirements, provide:

1. Trench Grate
    1. Model: Custom-per radius shown on plans/Ironsmith-Wave Pattern, 1 foot width.
    2. Mounting: Embedded-steel anchors with Nelson Anchors
    3. Color: Natural Steel Finish

J. Basis-of-Design Product: Subject to compliance with requirements, provide:

1. Rockwall
    1. Model: City of El Paso Standard, 6 foot tall
    2. Mounting: Concrete Footing and Grade Beam
    3. Option: rock veneer over CMU
    4. Color: Owner to specify

K. Basis of Design Product: Concrete Walls with Formliner.
1. Formliners shall be from Fitgerald Formliners
   1500 E. Chestnut Ave.
   Santa Ana California 92701
   1.800.547.7760

2.02 FINISHES, GENERAL

A. Comply with NAAMM's "Metal Finishes Manual for Architectural and Metal Products" for recommendations for applying and designating finishes.

B. Appearance of Finished Work: Variations in appearance of abutting or adjacent pieces are acceptable if they are within one-half of the range of approved Samples. Noticeable variations in the same piece are not acceptable. Variations in appearance of other components are acceptable if they are within the range of approved Samples and are assembled or installed to minimize contrast.

2.03 FINISHES

A. Baked-Enamel, Powder-Coat Finish: Manufacturer's standard, baked, polyester, powder-coat finish complying with finish manufacturer's written instructions for surface preparation, including pretreatment, application, baking, and minimum dry film thickness.
B. Formliner Concrete: Reuseable formliners shall be used in the textures specified. Voids in the concrete are not acceptable and care shall be taken to consolidate concrete by mechanical means. Tie holes shall visible but must be vertically and horizontally aligned and consistently spaced. Patching of unconsolidated concrete or tie holes will not be accepted.

PART 3 - EXECUTION

3.01 EXAMINATION

A. Examine areas and conditions, with Installer present, for compliance with requirements for correct and level finished grade, mounting surfaces, installation tolerances, and other conditions affecting performance.

1. Proceed with installation only after unsatisfactory conditions have been corrected.

3.02 INSTALLATION GENERAL

A. Comply with manufacturer's written installation instructions unless more stringent requirements are indicated. Complete field assembly of site furnishings where required.

B. Unless otherwise indicated, install site furnishings after landscaping and paving have been completed.

C. Install site furnishings level, plumb, true, and securely anchored and positioned at locations indicated on Drawings.

3.03 CLEANING

A. After completing site furnishing installation, inspect components. Remove spots, dirt, and debris. Repair damaged finishes to match original finish or replace component.

END OF SECTION 12 93 00

SECTION 13000
TENSILE MEMBRANE STRUCTURES

PART 1 - GENERAL

1.1 RELATED DOCUMENTS

A. Drawings and general provisions of the Contract, including General and Supplementary Conditions and other Division 1 specification sections, apply to the Work of this Section.

1.2 SUMMARY

A. This Section includes an exterior architectural tensile membrane shade structure system.

B. The tensile membrane structure contractor (hereafter referred to as “Subcontractor”) shall be responsible for the detailing, fabrication, supply, and installation of the Work specified herein, some or all of which may be subcontracted by Subcontractor to others meeting the qualification requirements of Section 1.5. The intent of this specification is to establish in the first instance an undivided, single-source responsibility of the Subcontractor for all of the foregoing functions.

C. Subcontractor’s Work shall include, but not necessarily be limited to, the supply, fabrication, shipment, and erection of the following principal items:

1. The architectural membrane as indicated on the drawings and in these specifications.
2. Cables and end fittings.
3. Perimeter, catenary, and sectionalized aluminum clamping system.
4. Structural steel, including masts, trusses, struts, beams, and/or weldments, as indicated on the drawings.
5. Fasteners and gasketing.

D. The architectural membrane used in these structures shall be polytetrafluoroethylene ("PTFE," such as Teflon®) coated woven fiberglass. All references to "membrane" in this Section 13000, without exception, and whether singular, plural, or capitalized or not, are to such architectural membrane.

E. Related Sections: The following Construction Specification divisions contain requirements relating to this section:
1. Division 1: General Requirements.
2. Division 3: Concrete, for cast-in-place foundations.
3. Division 5: Metals, for structural metal framing, metal fabrications, expansion control systems, and shop-applied metal coatings.
4. Division 9: Finishes, for paints and coatings.

1.3 REFERENCES

A. General: Except as otherwise shown or noted, all Work shall comply with the requirements of the following codes and standards:
1. Building Code of IBC 2009.
2. American Institute of Steel Construction (AISC).
   a. AISC/ANSI 360 Specification for Structural Steel Buildings
   b. AISC 303 Code of Standard Practice for Steel Buildings and Bridges
   c. AISC/ANSI 341 Seismic Provisions for Structural Steel Buildings

3. American Society of Civil Engineers (ASCE).
   a. ASCE 19: Structural Applications of Steel Cables for Buildings
4. American Society for Testing and Materials (ASTM).
   a. ASTM A586: Standard Specification for Zinc-Coated Steel Structural Strand
   b. ASTM A603: Standard Specification for Zinc-Coated Steel Structural Wire Rope
   c. ASTM D4851-88: Standard Test Methods for Coated and Laminated Fabrics for Architectural Use
   d. ASTM E84: Standard Test Method for Surface Burning Characteristics of Building Materials
   e. ASTM E108: Standard Test Methods for Fire Tests of Roof Coverings
   f. ASTM E136: Standard Test Method for Behavior of Materials in a Vertical Tube Furnace at 750 Degrees C
   g. ASTM C423: Standard Test Method for Sound Absorption and Sound Absorption Coefficients by the Reverberation Room Method
   h. ASTM E424: Standard Test Method for Solar Energy Transmittance and Reflectance of Sheet Materials
5. American Welding Society (AWS).
   a. AWS D1.1: Structural Welding Code
   b. AWS 2.4: Symbols for Welding and Nondestructive Testing
6. Aluminum Association.
   a. Specifications for Aluminum Structures
7. National Fire Protection Association (NFPA).
   a. NFPA 701: Standard Methods of Fire Tests for Flame Propagation of Textiles and Films
8. Society for Protective Coatings (SSPC).
   a. Steel Structures Painting Manual, Volumes 1 and 2

1.4 SYSTEM REQUIREMENTS

A. General: Provide a structural tensile membrane system that complies with requirements specified herein by testing the Subcontractor's corresponding membrane system in accordance with the indicated test methods.

B. Building Code Criteria: The tensile membrane structure shall comply with the City Of El Paso, Texas current code International Building Code 2009 edition and all applicable codes concerning this project and its location

1. Ground Snow Load: _____ psf
2. Snow Load Importance Factor: _____
3. Roof Live Load _____ psf
4. Basic Wind Speed: _____ mph
5. Wind Load Importance Factor: _____
6. Wind Exposure Category: _____
7. Design Mean Roof Height(s): _____ feet

All of the above as per applicable code requirements

C. Life Safety: All tensile membrane structures shall be detailed so that no life safety issue is created in the event of a loss of a part of the membrane. The tensile membrane structure shall not rely on the membrane for structural stability.

D. Fire Performance: Range of characteristics required of membranes:
   1. Burning Characteristics (ASTM E84).

a.	Flame Spread	5 max.
b.	Smoke Generation (Tunnel Test)	20 max.

2. Fire Resistance of Roof Coverings (ASTM E108).

a.	Burning Brand	Class A

3. Incombustibility of Substrates (ASTM E136).

a.	Substrate Noncombustible	Pass

4. Flame Resistance (NFPA 701 Small Scale, UL 94).

a.	Flame Out	1 second after
b.	Char Length	0.25-inch max.

1.5 QUALITY ASSURANCE

A. Subcontractor Qualifications: Fabrication and erection of the tensile membrane structure is limited to firms with proven experience in fabrication and construction of complex tensile membrane structures. Such firms, through their own experience and/or that of their qualified subcontractors, shall meet the following minimum requirements:
   1. The Subcontractor shall have at least fifteen (15) years' experience in the successful fabrication and erection of permanent, custom tensile membrane structures.
   2. The Subcontractor shall have fabricated and erected at least fifty (50) PTFE-coated woven fiberglass tensile membrane structures, with at least five (5) structures of similar size and complexity as this project.
   3. The Subcontractor shall design, procure, fabricate and erect PTFE-coated woven fiberglass tensile membrane as a tensile membrane structure.
   4. The Subcontractor shall demonstrate it owns and operates a fabrication facility of adequate capacity and will maintain a staff experienced in the fabrication of PTFE-coated woven fiberglass tensile membrane structures that will undertake the fabrication of this project. Subcontractor shall demonstrate that the facility is ISO-certified and shall meet the specific requirements listed in Section 3 of this Specification.
   5. The Subcontractor shall maintain an in-house Warranty and Service department to assist in repair and service calls.
   6. The Subcontractor shall submit a Corporate Quality Control Manual describing the company's complete quality assurance program.
   7. The Subcontractor shall have ISO 9001:2008 registration in Design, Construction and installation of fabric and cable based structures

B. Qualified Subcontractor.
   1. Birdair, Inc. or Equal
      65 Lawrence Bell Drive, Amherst, New York 14221 USA
      Phone (716) 633-9500 Fax (716) 633-9850 Web Site www.birdair.com
   2. _____.
   3. _____.

1.6 SUBMITTALS

A. General: Notwithstanding any provisions of these specifications that may appear to be to the contrary, any and all submittals by the Subcontractor shall be subject to review, approval, and adoption by the Project Engineer as part of the overall project design and engineering, and shall not create a contractual or other professional design relationship between the Subcontractor and either the Project Engineer or the Owner.

B. Product Data: Include manufacturer's specifications for materials, fabrication, installation, and recommendations for maintenance. Include test reports showing compliance with project requirements where test method is indicated.
   1. Samples: Submit selection and verification samples.

C. Submittals With Bid: The General Contractor shall submit with its bid the following materials from the Subcontractor:

1. Schedule indicating key milestone dates during the project.

2. Pre-qualification package including:
   a. Company background and years of experience
   b. Organizational chart and staff C.V.
   c. List of past project references
   d. Client recommendations
   e. Fabrication facility documentation:
      i) Background, including proof of ownership and years of operation
      ii) Physical address
   g. ISO certifications for Design and Fabrication facilities

D. Shop Drawings: Subcontractor shall submit tensile membrane structure drawings defining the completed structure, anchorage and connection details, interfaces with building construction, and general membrane seam arrangements.

E. Quality Assurance Submittals.

1. Test Reports: Provide test reports from a qualified testing laboratory that show compliance of the Subcontractor's PTFE-coated woven fiberglass tensile membrane system with specification requirements, as follows:
   a. Physical test data of the actual fabric roll goods to be used in the project confirming conformance with specifications for the membrane.
2. Certificates: Product certificates signed by the Subcontractor certifying materials comply with specified characteristics, criteria, and physical requirements.

F. Closeout Submittals.

1. Warranty: Project Warranty documents as described herein.
2. Record Documents: Project record documents for installed materials in accordance with Conditions of the Contract and Division 1 Submittal Procedures Section.
3. Maintenance Manual: Submit two (2) copies of a maintenance manual for the tensile membrane structure to the Owner. The manual shall include a schedule for routine inspection, an inspection checklist, instructions for emergency repair and use of emergency repair materials, and warranty. During the system erection period, the Owner shall provide maintenance personnel to be trained in the use of the repair materials.

1.7 PRODUCT DELIVERY, HANDLING, AND STORAGE

A. General: Refer to the Conditions of the Contract for product handling provisions.

B. Materials shall be packed, loaded, shipped, unloaded, stored, and protected in a manner that will avoid abuse, damage, and defacement.

1.8 WARRANTY

A. General: Refer to the Conditions of the Contract for project warranty provisions.

B. After final payment, the Subcontractor shall furnish the Owner with a written Warranty, which warrants that the membrane, its perimeter attachment system, and the structural support system as supplied by the Subcontractor have been installed in accordance with the project specifications and will be free from defects in materials and workmanship that will impair their normal use or service. The Warranty shall start from the date of

Substantial Completion of the tensile membrane structure; which shall be the first date on which the entire tensile membrane structure is subject to design prestress conditions, and continue for a period of three (3) years thereafter.

PART 2 - MATERIALS

2.1 ARCHITECTURAL MEMBRANE

A. General: The membrane used in these structures shall be polytetrafluoroethylene ("PTFE," such as Teflon®) coated woven fiberglass. All references to "membrane" in this Section 13000, without exception, and whether singular, plural, or capitalized or not, are to such architectural membrane.

B. The membrane shall meet the following general requirements:

1. Source Quality Control: The primary materials shall be obtained from a single manufacturer. Secondary materials shall be those recommended by the primary manufacturer.

2. Physical Characteristics: The following indicates a range of physical properties typical of PTFE Architectural Membranes. The determination of specific characteristics and selection of a membrane shall be derived from project engineering by the Project Engineer. [Edit specific characteristics below per engineering requirements.]

a. Coated Fabric Weight (oz./sq. yd.): 24 min. to 45.5 nom. (ASTM 4851)

b. Thickness (mils): 18 min. to 36 nom. (ASTM 4851)

c. Strip Tensile (lbs./in., avg.):

1. Dry, Warp 520 min. to 975 min. avg. (ASTM 4851)

2. Dry, Fill 380 min. to 900 min. avg. (ASTM 4851)

d. Strip Tensile, After Crease Fold (lbs./in., avg.):

1. Dry, Warp 375 min. to 760 min. avg. (ASTM 4851)

2. Dry, Fill 350 min. to 735 min. avg. (ASTM 4851)

e. Trapezoidal Tear (lbs./in., avg.):

1. Warp 35 min. to 95 min. avg. (ASTM 4851)

2. Fill 35 min. to 120 min. avg. (ASTM 4851)

f. Solar Transmission (%): 7 to 22 nom. (ASTM E424)

g. Solar Reflectance (%): 70 to 73 nom. (ASTM E424)

C. Materials.

1. Base Fabric: The yarns used shall be of the highest commercial quality, essentially free of broken fibers and fully suitable for coating. The fabric shall be woven with uniform tension and crimp in the warp and fill yarns and free of defects deleterious to the coating process.

2. Fluorocarbon Coatings: The coating materials shall be fluorocarbon resins formulated specifically for architectural applications. These materials shall be

applied to form a weatherized barrier between the fiberglass yarns and the environment. The bulk of the coating shall be formulated dispersions of PTFE fluoropolymer resin and additives to enhance abrasion and tear resistance, impart pigmentation, or modify solar transmission. The additives shall not constitute more than 20% by weight of the total coating or 25% by weight of any individual layer. The surface shall be totally a fluoroethylenepropylene ("FEP") resin to facilitate heat welding.

3. After weaving, the base fabric shall be cleaned and primed to achieve optimum mechanical properties of the coated membrane. The coating, described above, shall be virtually free of mud cracks and pinholes. The coating shall be applied evenly to both sides of the fabric and the FEP fluorocarbon resin topcoat shall be of sufficient thickness to permit proper heat fusion of joints with the recommended die pressure and temperature.

2.2 CABLES AND END FITTINGS

A. Materials.

1. All structural wire rope cables shall conform to the latest revision of ASTM A603.
2. All structural strand cables shall conform to the latest revision of ASTM A586.
3. All cables shall be coated to "Class A" zinc coating throughout.
4. All cables in contact with the membrane shall be white PVC coated. All other cables may be galvanized only.

B. Fabrication.

1. Cable fabricator shall provide effective quality control over all fabrication activities. Inspection of the place of fabrication may occur at any time to verify proper quality control. This inspection does not relieve the fabricator from meeting the requirements of this specification.
2. Cables that are designated to be prestretched shall be prestretched per ASTM A603 for wire rope and ASTM A586 for structural strand. Cables of the same type shall have the same modulus of elasticity.
3. All cables shall be manufactured to the following length tolerances at 70 degrees Fahrenheit (23 degrees Celsius):
   a. Length < 70 feet (213 meters) ¼ inch (6.4 mm)
   b. Length 70 to 270 feet (32.3 to 82.3 meters) 0.03% of length
   c. Length > 270 feet (82.3 meters) 1 inch (25.4 mm)
4. Cables shall have a continuous longitudinal paint stripe (¼ inch wide max.) along their top surface unless noted otherwise.
5. Index markings shown shall be a circumferential paint stripe (¼ inch wide max.).
6. All cables and end fittings shall be delivered clean and dry.
7. All swaged and speltered fittings shall be designed and attached to develop the full breaking strength of the cable. Thimble end fittings shall develop a minimum of 90% of the cable breaking strength.
8. Swaged end fittings, pins, nuts, and washers shall be hot dip galvanized per ASTM A153. Any damage to the zinc coating shall be cleaned and painted with a gray zinc-rich paint per ASTM A780.
9. Speltered end fittings shall be hot dip galvanized per ASTM A153. Any damage to the zinc coating shall be cleaned and painted with a gray zinc-rich paint per ASTM A780.

2.3 ALUMINUM CLAMPING SYSTEM

A. Materials.

1. All structural aluminum clamping systems shall be ASTM alloy 6061-T6.
2. Bent plates shall be formed from ASTM alloy 6061 and then heat-treated to T6.
3. All structural "U straps" shall be stainless steel, Type 316.

4. All structural aluminum clamping shall have the following finish:
   a. Clear anodized per MIL-A-8625C Type 2, Class 1
5. Structural sheet aluminum shall be ASTM alloy 5052-H32.
6. Non-structural sheet aluminum shall be ASTM alloy 1100 series.

B. Fabrication.
1. Aluminum fabricator shall provide effective quality control over all fabrication activities. Inspection of the place of fabrication may occur at any time to verify proper quality control. This inspection does not relieve the fabricator from meeting the requirements of this specification.
2. Fabricated aluminum shall have no sharp edges.
3. Stamp all parts with the appropriate mark number.
4. All fabricated aluminum shall be free of oil, grease, and machining chips.
5. Tolerances shall be as follows:
   a. Cross sectional dimensions +/- 10%, 0.03-inch (0.8 mm) max.
   b. Bolt hole locations +/- 1/32 inch (0.8 mm)
   c. Overall length +/- 1/16 inch (1.6 mm)
6. All welded joints shall conform to AWS D1.2.

2.4 STRUCTURAL STEEL

A. General: The structural steel fabrication shall comply with the latest revision of all applicable codes, standards, and regulations including the following:
1. ASTM (as referenced).
2. AISC: "Specification for Structural Steel Buildings" and "Code of Standard Practice for Steel Buildings and Bridges."
3. SSPC: "Steel Structures Painting Manual, Volumes 1 and 2."
4. Research Council on Riveted and Bolted Structural Joints: "Specification for Structural Joints Using ASTM A325 or A490 Bolts."
5. AWS D1.1 and AWS A2.4.

B. In the event of conflict between pertinent codes and regulations and the requirements of the referenced standards or these specifications, the provisions of the more stringent shall govern.

C. Submittals.
1. General: Submit the following in accordance with Conditions of the Contract and Division 1 Submittal Procedures Section.
2. Shop Drawings.
   a. The structural steel fabricator shall submit shop drawings to the Subcontractor for approval.
   b. The drawings shall show all shop and erection details including cuts, copes, connection holes, threaded fasteners, bolts, studs and spacing, etc.
   c. The drawings shall show all welds, both shop and field, by the currently recommended symbols of the AWS.
   d. A welding procedure must be submitted to the Subcontractor for approval of welds that are not prequalified.
   e. Shop drawings shall be carefully checked before being submitted for approval, and shall be submitted in the order in which they are needed for the execution of the work, well in advance and not all at one time. Submitted drawings shall show all structural steel required for the work, whether or not indicated on the drawings.
   f. The fabricator shall not fabricate any material until after receipt of approved drawings.

g. The fabricator shall immediately make all corrections to his drawings as required by the Subcontractor and shall keep a satisfactory history of all changes by separately numbered and dated revision block on a convenient portion of each drawing affected.

h. Certification of material conformance that includes chemical and physical properties for all structural elements shall be submitted to the Subcontractor.

D. Materials.

1. Structural steel for plates and bars shall conform to the requirements of ASTM A36 or ASTM A572, Grade 50, unless noted otherwise.
2. Structural pipe shall conform to ASTM A53, Types E or S, Grade B.
3. Structural tubing shall conform to ASTM A500 Grade B.

4. Structural bolts.
   a. High strength bolts: ASTM A325, unless noted otherwise.
   b. Common bolts and nuts: ASTM A307.
   c. Threaded rods: ASTM A36, unless noted otherwise.
5. Other materials: All other materials, not specifically described but required for a complete and proper installation of structural steel, shall be provided and shall be new, free from rust, first quality of their respective kinds, and subject to the approval of the Subcontractor.

E. Accessories.

1. Base Plates and Anchor Bolts.
   a. Base plates supported on concrete, whether shop attached or shipped loose, shall be furnished and set on shims, leveling plates or leveling nuts. Grouting shall be by the General Contractor.
   b. Anchor bolt locations shall be furnished by the Subcontractor and used by the General Contractor to set the bolts. The General Contractor is to check carefully the setting of the bolts to their proper position prior to placing of concrete. Anchor bolts, provided by the General Contractor, shall have two (2) nuts and washers. Damaged threads shall be repaired or be cut to permit full tightening of nuts.

F. Fabrication.

1. Workmanship: All members, when finished, shall be true and free of twists, bends, and open joints between the component parts. Members shall be thoroughly straightened in the shop by methods that will not injure them, before being worked on in any way.
   a. Properly mark materials, and match-mark when directed by the Subcontractor, for field assembly.
   b. Grind all edges and corners that could contact membrane to a minimum 1/16” (1.6mm) radius.

2. Connections.
   a. Connections shall be as indicated on the drawings. When details are not shown the connections shall conform to the requirements of the AISC.
   b. Provide high-strength threaded fasteners for all structural steel bolted connections, unless noted otherwise.
   c. Combination of bolts and welds in the same connection are not permitted, unless otherwise detailed.
   d. Welded Connections.

1. Definitions: All terms herein relating to the welds, welding and oxygen cutting shall be construed in accordance with the latest revision of “Standard Definitions of Welding Terms and Master Chart of Welding Processes” of the AWS.
2. Operators: Welds shall be made only by operators who have been previously qualified by tests, as prescribed in AWS D1.1 to perform the type of work required.
3. Welding equipment shall be of sufficient capacity and maintained in good working condition, capable of adjustment in full range of current settings. Welding cables shall be adequate size for the currents involved and grounding methods shall be such as to insure proper machine operation.
4. No welding shall begin until joint elements are clamped in proper alignment and adjusted to dimensions shown on the drawings with allowance for any weld shrinkage that is expected. No members are to be spliced without prior approval.

5. All welding shall be done in accordance with the reference specifications, with the following modifications and additions:
   a. All field welding shall be done by manual shielded metal-arc welding.
   b. All groove welds shall have complete penetration, unless otherwise specified on the drawings.
   c. The minimum preheat and interpass temperature requirements shall be as required per AWS D1.1.
6. Welding Sequence: Heavy sections and those having a high degree of restraint must be welded in a sequence with the proper preheat and post-weld heat treatment such that no permanent distortion occurs. Submit a welding sequence for approval for these types of connections.
7. Oxygen Cutting: Manual oxygen cutting shall be done only with a mechanically guided torch. Alternatively, an unguided torch may be used provided the cut is not within 1/2 inch of the finished dimension and the final removal is completed by chipping or grinding to produce a surface quality equal to that of the base metal edges. The use of oxygen-cut holes for bolted connections or pin connections will under no circumstances be permitted, and violation of this clause will be sufficient cause for the rejection of any pieces in which oxygen-cut holes exist.

3. Tolerances: All tolerances shall be as per the AISC “Code of Standard Practice for Steel Buildings and Bridges” unless otherwise indicated. Limit variation in straightness to (member length)/960 measured in any direction for all members.

4. Paint System, Two-Coat; Zinc Polyurethane:
   a. Source Quality Control: Primary materials shall be obtained from a single manufacturer. Secondary materials shall be those recommended by the primary manufacturer.
   b. Surface Preparation and Prime Coat:
      1. Surface preparation shall be commercial blast cleaning SSPC-SP-6, after all fabrication operations such as machining and welding are complete. There shall be a maximum of eight hours elapsed time between surface preparation and application of the prime coat.
      2. Protect all drilled and tapped holes and/or threaded studs prior to painting such that all bolted connections can be made by

subcontractor or membrane structure erector without first cleaning threads.

3. Primer shall be International Paint Interzinc 315 or approved equal, and shall comply with the composition and performance requirements of SSPC paint specification No. 20.
4. Primer shall be mixed and applied in accordance with manufacturer's instruction and technical product datasheets. The dry film thickness shall be 2.5-3 mils.

c. Finish Coat:
   1. Finish coat shall be International Paint Interthane 870 series or approved equal, and shall comply with the composition and performance requirements of SSPC paint specification No. 36.
   2. Finish coat shall be mixed and applied in accordance with manufacturer's instructions and technical product datasheets. The dry film thickness shall be 4-5 mils.
   3. Total system dry film thickness shall be 6.5-8 mils.

d. Color:
   1. The paint color shall be as specified on the drawings or selected by the Architect.

e. Finish Quality:
   1. Dry paint shall be uniform and continuous with no voids or puddles and shall not be broken by scratches or nicks. Although Birdair or the steel fabricator may witness the painting operation, this does not relieve the painting subcontractor of the responsibility for meeting the quality and workmanship requirements of this specification.

f. Care and Handling:
   1. Painting subcontractor shall make every reasonable effort to ensure the painted steel is thoroughly dry and it is handles carefully to prevent aesthetic or structural damage. Nylon slings shall be used when handling painted steel.

g. Certification:
   1. Painting Subcontractor shall certify the paint manufacturer's name, paint identification, conformance with manufacturer's written instructions, and the paint dry mil thickness.

G. Source Quality Control.

1. Testing.
   a. An independent testing laboratory paid for by the Owner shall perform testing and inspection of the structural steel and welding. All welds shall be tested by visual, dye penetrant, magnetic particle methods, or ultrasonic methods in accordance with instructions from the Subcontractor.
   b. The Subcontractor and the testing laboratory inspector shall be permitted to inspect the work in the shop or field throughout fabrication and erection.
   c. The inspector shall check for workmanship of steel, both in the shop and field, and check general compliance with the Contract Documents and steel shop drawings. The inspector shall record types and locations of all defects found in the work and measures required and performed to correct such defects.
   d. The steel fabricator shall make all repairs to defective work to the satisfaction of the inspector and at no additional cost to the Subcontractor.

e. The inspector shall submit reports of his inspection and test findings to the Subcontractor. He shall record all defects found with subsequent repair operations and submit reports to the Subcontractor.

f. The work of the independent inspector shall in no way relieve the steel fabricator of his responsibility to comply with all requirements of the Contract Documents.

H. Product Handling and Protection: Use all means necessary to protect structural steel before, during, and after installation and to protect the installed work and materials of all other trades.

I. Rejection and Replacement.

1. In the event of damage to the steel, immediately make all repairs and replacements necessary to the approval of and at no additional cost to the Subcontractor.
2. Any materials or welding rejected through inspection either in the shop, mill or field must be promptly replaced to the satisfaction of, and at no additional cost to, the Subcontractor.

J. Qualifications of Steel Fabricator: The steel fabricator shall have not less than five (5) years' continuous experience in the fabrication of structural steel.

2.5 FASTENERS

A. General: Provide fasteners used to secure clamp systems to curbs and cables, assemblage of clamp systems, and other fasteners as required to complete the work specified herein.

B. Materials.

1. All work shall comply with the latest edition of ASTM standards and American Iron and Steel Institute (AISI), as referenced herein.
2. Fasteners used in membrane clamping systems shall be stainless steel. Bolts and studs shall conform to ASTM F593, Type 304. Nuts shall conform to ASTM F594, Type 316. Washers shall be plain, narrow, and conform to AISI Type 18-8.
3. All clamping systems subjected to relative movement between clamping and curb shall receive a split-ring lock washer conforming to AISI Type 18-8.
4. Unless otherwise specified on the drawings, all other bolts and nuts shall conform to ASTM A307-76B, zinc plated to conform to ASTM B633 Class Fe/Zn 8 type III.

C. Source Quality Control: The manufacturer shall certify that all fasteners comply with the above referenced specifications.

2.6 GASKETING

A. General: All work shall comply with the latest edition of ASTM standards, as referenced herein.

B. Sponge Neoprene Gasketing:

1. Material.
   a. All sponge neoprene shall be of a cellular elastomeric compound of a firm grade, which has been manufactured in pre-formed shapes for use as gasket and sealing material, as specified in ASTM specification C509.
   b. Cellular elastomeric materials furnished to this specification shall be manufactured from natural or synthetic rubber, or mixtures of these, with

added compounds of such nature and quality that, with proper curing, the finished product will comply with this specification.

c. The cured compounds shall be suitable for use where resistance to sunlight, weathering oxidation, and permanent deformation under load are of prime importance.

d. The manufacturing process shall be such as will ensure a homogeneous cellular material free of defects that may affect serviceability.

e. The physical characteristics of the neoprene must meet or exceed ASTM C509, "Standard Specification for Elastomeric Cellular Preformed Gasket and Sealing Materials."

f. Certification of material shall be provided that conforms to ASTM C509.

C. Dense Neoprene Gasketing:

1. All neoprene material shall conform to ASTM D 2000M hardness Grade 60. The material shall be homogenous, free from defects and shall be compounded and cured to meet the requirements specified herein.

2. All neoprene shall be non-staining formulation and shall consist of at least 50% by weight of basic rubber hydrocarbon. Material shall not contain crude or reclaimed rubber.

3. The physical characteristics of the neoprene must meet or exceed the following physical test requirements when tested using the standard ASTM test slab can compression set plug (or approved equal):

	PROPERTY	ASTM TEST METHOD	UNITS
a.	Shore A Durometer	D 2240	55 – 65
b.	Tensile Strength (Min.)		D 412 1,100 PSI
c.	Percent Elongation (Min.)	D 412	300%
d.	Percent Compression Set (Max.) 35%	22 hrs at 212°F	D 395, Method B,
e.	Heat Aging, Change from Original Properties:	D 573, 70 hrs @ 212°F	
	1. Hardness Change (Max.)		+15 Points Shore A
	2. Tensile Strength (Max.)		-15%
	3. Elongation Change (Max.)		-40%
f.	Flame Resistance		Must Not Propagate Flame
g.	Temperature Range		-30°C to 100°C
h.	Ozone Resistance	D 1171, Method A, 72 hrs @ 38°C and 50 mPa Ozone	
i.	Resistance to Oil Aging:	D 471, 70 hrs @ 212°F Immersion in ASTM Oil No. 3	
	1. Tensile Strength (Max.)		-70%
	2. Elongation (Max.)		-55%
	3. Volume Change (Max.)		+120%

2.7 MAINTENANCE KIT

A. Architectural Membrane Maintenance Kit: The Owner shall be supplied with the following materials for emergency repair or maintenance. The materials shall be neatly packaged into a maintenance kit for storage by the Owner.

B.	QUANTITY	DESCRIPTION
1.	6	12-inch diameter patch with FEP sheets
2.	12	5-inch diameter patch with FEP sheets
3.	12	4 inch x 8 inch rectangular patch with FEP sheets
4.	6 sq yds	Outer Membrane
5.	200 ft	FEP tape, 3 inches wide
6.	1	Soldering iron, 500W with wedge tip
7.	1	Tacking sealer, 3 inch x 5 inch die
8.	2	Insulating bearing blocks
9.	1	5/8 in. hole punch
10.	1	Utility knife
11.	50	Repair clips
12.	1	Spool of No. 36 nylon twine
13.	36 yds	Cormar B29/4 x 15 Kevlar® thread
14.	1	Hand awl
15.	1 pkg	C-29 needles
16.	1	Repair manual

PART 3 - FABRICATION AND ERECTION

3.1 FABRICATION OF MEMBRANE PANELS

A. General.

1. Membrane assembly shop drawings shall include all information necessary for the fabrication by the Subcontractor of the tensile membrane structure. They shall include size and shape of envelope, type and location of shop and field connections, size, type, and extent of all heat-welded seams.
2. The Subcontractor shall take necessary care to plan and assemble the fabricated sections such that the assembly has no shop patches. Splices, if any, shall be patterned into a symmetrical and repetitive geometric arrangement within the assembly, shown on the shop drawings and, where feasible, hidden by structural members.
3. All fabricated joints shall have a minimum of 90% of the total strength of the coated membrane in strip tensile testing. All structural joints shall be fused in accordance with industry standards and shall maintain the integrity of the coating. PTFE-coated woven fiberglass membranes shall be heat-sealed only.
4. Biaxial Test: At least one (1) representative sample of the outer membrane shall be biaxially test loaded. Membrane compensation in patterning shall be based upon the results of the biaxial test loading.

3.2 ERECTION OF MEMBRANE ASSEMBLIES

A. Prior to installation of the membrane assemblies, the Subcontractor shall meet with the General Contractor to review the erection procedure and scheduling. The Subcontractor shall coordinate all work with other trades.

B. No trade shall have access to, or work from the membrane, unless authorized by the Subcontractor in writing.

C. Erection of Structural Steel (or other structural supporting elements).

1. The Subcontractor shall employ a competent foreman to supervise all work of steel erection. This foreman shall be present at all times during the Subcontractor’s scope of work.

2. All precautions shall be taken to ensure an accurately located and completely safe and stable structure at all times. Adequate guy cables shall be used throughout the work and all erection bolts shall be drawn up tight.
3. All steel shall be accurately aligned before permanent connections are made.
4. Temporary bracing shall be left in place as long as may be required for safety. The bracing shall be located so it does not interfere with the erection of the tensile membrane structure, and can be removed as required during construction.
    a. The structure is to be self-supporting and stable after the building is fully completed. It is the Subcontractor's sole responsibility to determine the erection procedure and sequence and to ensure the safety of the building and its component parts during erection. This includes the addition of whatever temporary bracing, guys or tie-downs that may be necessary. Such materials shall be removed by the Subcontractor and remain his property after completion of the project.
5. Erection tolerances shall be specified in the AISC "Code of Standard Practice for Steel Buildings and Bridges," including those related to placement of anchor bolts, unless otherwise indicated.
    a. Tensile membrane structures (including individual membrane panels) are pre-engineered and pre-fabricated to fit a specific theoretical dimension. For those primary and secondary structural elements to which the membrane structure (including an individual membrane panel) is connected, the erected position of member working points, including those of cantilevered members, shall not vary from the theoretical model by more than 1" (25mm) in any direction, either individually, *or cumulatively* across a shipping piece. This includes but is not limited to: cable connection points, membrane panel edges, membrane bearing locations, intermediate splice points of field-spliced members, hardware connections, weldments and their anchorages. For arched members, include the three-dimensional location of the member midpoint as a working point for tolerance measurement.
    b. The *cumulative* effect of dimensional steel discrepancies shall be such that the distance between membrane panel support points does not vary more than 1" (25mm) from the theoretical dimension within each membrane panel.
    c. All steel structures that support tensioned membrane must maintain an uninterrupted drainage path and a minimum constant slope of 5 degrees from all points of the membrane.
    d. In the event of conflict between pertinent codes and regulations and the requirements of the referenced standards *or* these specifications, the provisions of the more stringent shall govern.

3.3 PROTECTION AND CLEANING

A. Protect work from damage and deterioration during installation.

B. Upon completion of tensile membrane structure installation:
1. The Subcontractor shall clean all surfaces of the system's components in conformance with the membrane manufacturer's recommendations.
2. Inspect the system and repair membrane panels that have become damaged. Repairs shall be executed in such a way that they are visually acceptable.

C. Further protection of the work and final cleaning, if necessary, shall be the responsibility of the General Contractor.

END OF SECTION 13000

SECTION 13065
BULLET RESISTANT ACRYLIC SECURITY GLASS

PART 1 GENERAL

1.1 REFERENCE

A. Underwriters Laboratory UL 752-Standard for Bullet Resisting Equipment, ASTM C 1172 - Standard Specification for Laminated Architectural Flat Glass, NIJ Standard 0108.01 - (National Institute of Justice) Standard for Ballistic Resistant Protective Materials (September, 1985).

1.2 SUBMITTALS

A. The following shall be submitted by the manufacturer in accordance with Sections 13070 and any Special Contract Requirements: Submit for approval prior to fabrication: samples, product data (including preparation, storage and installation methods), cuts & anchor spacing, reinforcement & location , product specifications, shop drawings, test reports (current UL Listing Verification & UL 752 Test Results as provided by Underwriters Laboratories), and printed data in sufficient detail to indicate compliance with the contract documents.
B. Provide manufacturer's instructions for installation and cleaning of TSS Bullet Resistant Acrylic. All required submittals shall be approved prior to installation.

1.3 DESIGN PERFORMANCE

A. Through the design, manufacturing techniques and material application the TSS Bullet Resistant Acrylic Security Glass shall be constructed of cast acrylic sheets. With a UL Standard 752 Level 1. Include abrasion resistance coating.
B. Light Transmission in excess of 90%.
C. UL Level 1 to be a thickness of 1.25".

1.4 QUALITY ASSURANCE

A. Manufacturer shall be a Company that specializes in manufacturing products of the specified type with a minimum of five years of experience. Installer shall be a Company that specializes in product type specified. Manufacturer shall provide a sample with color/finish to the Architect for approval prior to start of work.

1.5 DELIVERY, STORAGE & HANDLING

A. Delivery the materials to the project with the manufacturer's UL Listed Labels intact and legible. Handle the materials with care to prevent damage. Store materials inside and under cover, stack flat and off floor. Project conditions (temperature, humidity, and ventilation) shall be within the maximum limit recommendations set by manufacturer. Do not install products that are under conditions outside these limits.

1.6 WARRANTY

A. All materials shall be warranted against defects for a period of 1 year for the date of receipt at the project site. . Certificates of manufacturer's standard limited warranty shall be provided at project completion.

PART 2 PRODUCTS

2.1 ACCEPTABLE MANUFACTURERS

A. Products shall be manufactured by: Total Security Solutions, Inc, 170 National Park Drive, Fowlerville, MI 48836, 866-930-7807. Jim Richards, info@demandtss.com . Web: www.tssbulletproof.com . No substitutions shall be accepted.

2.2 PRODUCT: BULLET RESISTANT ACRYLIC SECURITY GLAZING.

A. Product to be TSS ACRYLIC :

1) Level 1 with ARA (Abrasion Resistant Acrylic) 1.25”

PART 3 EXECUTION

3.1 PREPARATION

A. Prior to installing the bullet resistive material, the contractor shall verify that all supports have been installed as required by the contract documents and architectural drawings, and approved shop/CAD drawings, if required. Installer shall notify architect of any unsatisfactory preparation that is responsibility of another installer.

B. Clean and prepare all surfaces per manufacturers recommendations for achieving the best results for the substrate under the project conditions.

3.3 POST APPLICATION

A. Inspection and Cleaning: Verify installation is complete and complies with manufacturer’s requirements. Clean product and accessories, removing excess sealant, labels and protective covers.

B. Product Warranty: Applicable warranty shall be issued to owner upon final release of completed project.

SECTION 14240
HYDRAULIC ELEVATORS

PART 1 GENERAL

1.01 SUMMARY

A. Section includes: Hydraulic passenger elevators as shown and specified. Elevator work includes:
   1. Standard pre-engineered hydraulic passenger elevators.
   2. Elevator car enclosures, hoistway entrances and signal equipment.
   3. Jack(s).
   4. Operation and control systems.
   5. Accessibility provisions for physically disabled persons.
   6. Equipment, machines, controls, systems and devices as required for safely operating the specified elevators at their rated speed and capacity.
   7. Materials and accessories as required to complete the elevator installation.

B. Related Sections:
   1. Division 3 Concrete: Installing inserts, sleeves and anchors in concrete.
   2. Division 4 Masonry: Installing inserts, sleeves and anchors in masonry.
   3. Division 5 Metals:
      a. Providing hoist beams, pit ladders, steel framing, auxiliary support steel and divider beams for supporting guide-rail brackets.
      b. Providing steel angle sill supports and grouting hoistway entrance sills and frames.
   4. Division 9 Finishes: Providing elevator car finish flooring and field painting unfinished and shop primed ferrous materials.
   5. Division 22 Plumbing:
      a. Sump pit and oil interceptor.
   6. Division 23: Heating, Ventilation and Air Conditioning
      a. Heating and ventilating hoistways and machine rooms.
   7. Division 16 Sections:
      a. Providing electrical service to elevators, including fused disconnect switches.
      b. Emergency power supply, transfer switch and auxiliary contacts.
      c. Heat and smoke sensing devices.
      d. Convenience outlets and illumination in machine room, hoistway and pit.

C. Work Not Included: General contractor shall provide the following in accordance with the requirements of the Model Building Code and ANSI A17.1 Code. For specific rules, refer to ANSI A17.1, Section 300 for hydraulic elevators. State or local requirements must be used if more stringent.
   1. Elevator hoist beam to be provided at top of elevator shaft. Beam must be able to accommodate proper loads and clearances for elevator installation and operation.
   2. Supply in ample time for installation by other trades, inserts, anchors, bearing plates, brackets, supports and bracing including all setting templates and diagrams for placement.
   3. Hatch walls require a minimum two hours of fire rating. Hoistway should be clear and plumb with

variations not to exceed 1/2" at any point.

4. Elevator hoistways shall have barricades, as required.
5. Install bevel guards at 75° on all recesses, projections or setbacks over 2" (4" for A17.1 2000 areas) except for loading or unloading.
6. Provide rail bracket supports at pit, each floor and roof. For guide rail bracket supports, provide divider beams between hoistway at each floor and roof.
7. Pit floor shall be level and free of debris. Reinforce dry pit to sustain normal vertical forces from rails and buffers.
8. Where pit access is by means of the lowest hoistway entrance, a vertical ladder of non-combustible material extending 42" minimum, (48" minimum for A17.1-2000 areas) shall be provided at the same height, above sill of access door or handgrips.
9. Machine room to be enclosed and protected.
10. Machine Room temperature must be maintained between 55º and 90º F.
11. If machine room is remote from the elevator hoistway, clear access must be available above the ceiling or metal/concrete raceways in floor for oil line and wiring duct from machine room.
12. Access to the machinery space and machine room must be in accordance with the governing authority or code.
13. Provide an 8” x 16” cutout through machine room wall, for oil line and wiring duct, coordinated with elevator contractor at the building site.
14. All wire and conduit should run remote from either the hoistways or the machine room.
15. When heat, smoke or combustion sensing devices are required, connect to elevator machine room terminals. Contacts on the sensors should be sided for 120 volt D.C.
16. Install and furnish finished flooring in elevator cab.
17. Finished floors and entrance walls are not to be constructed until after sills and door frames are in place. Consult elevator contractor for rough opening size. The general contractor shall supply the drywall framing so that the wall fire resistance rating is maintained, when drywall construction is used.
18. Where sheet rock or drywall construction is used for front walls, it shall be of sufficient strength to maintain the doors in true lateral alignment. Drywall contractor to coordinate with elevator contractor.
19. Before erection of rough walls and doors; erect hoistway sills, headers, and frames. After rough walls are finished; erect fascias and toe guards. Set sill level and slightly above finished floor at landings.
20. To maintain legal fire rating (masonry construction), door frames are to be anchored to walls and properly grouted in place.
21. The elevator wall shall interface with the hoistway entrance assembly and be in strict compliance with the elevator contractor's requirements.
22. General Contractor shall fill and grout around entrances, as required.
23. Elevator sill supports shall be provided at each opening.
24. All walls and sill supports must be plumb where openings occur.
25. For applications with jack hole, free and clear access to the elevator pit area for the jack hole-drilling rig is required.
26. Where jack hole is required, remove all spoils from jack hole drilling.
27. When not provided by Elevator Contractor, jack hole shall accommodate the jack unit. If required the jack hole is to be provided in strict accordance with the elevator contractor's shop drawings.
28. Locate a light fixture and convenience outlet in pit with switch located adjacent to the access door.

29. A light switch and fused disconnect switch for each elevator should be located inside the machine room adjacent to the door, where practical, per the National Electrical Code (NFPA No. 70).
30. As indicated by elevator contractor, provide a light outlet for each elevator, in center of hoistway (or in the machine room).
31. For signal systems and power operated door: provide ground and branch wiring circuits, including main line switch. For car light and fan: provide a feeder and branch wiring circuits, including main line switch.
32. Wall thickness may increase when fixtures are mounted in drywall. These requirements must be coordinated between the general contractor and the elevator contractor.
33. Provide supports, patching and recesses to accommodate hall button boxes, signal fixtures, etc.
34. Locate telephone and convenience outlet on control panel.

1.02 SUBMITTALS

A. Product data: When requested, the elevator contractor will provide standard cab, entrance and signal fixture data to describe product for approval.

B. Shop drawings:
   1. Show equipment arrangement in the machine room/control space, pit and hoistway. Provide plans, elevations, sections and details of assembly, erection, anchorage, and equipment location.
   2. Indicate elevator system capacities, sizes, performances, safety features, finishes and other pertinent information.
   3. Show floors served, travel distances, maximum loads imposed on the building structure at points of support and all similar considerations of the elevator work.
   4. Indicate electrical power requirements and branch circuit protection device recommendations.

C. Powder Coat Paint selection: Submit manufacturer's standard selection charts for exposed finishes and materials.

D. Plastic laminate selection: Submit manufacturer's standard selection charts for exposed finishes and materials.

E. Metal Finishes: Upon request, standard metal samples provided.

F. Operation and maintenance data. Include the following:
   1. Owner's Manual and Wiring Diagrams.
   2. Parts list, with recommended parts inventory.

1.03 QUALITY ASSURANCE

A. Manufacturer Qualifications: An approved manufacturer with minimum fifteen years experience in manufacturing, installing, and servicing elevators of the type required for the project.
   1. Must be the manufacturer of the power unit, controller, signal fixtures, door operators cab, entrances, and all other major parts of the elevator operating equipment.
      a. The major parts of the elevator equipment shall be manufactured in the United States, and

not be an assembled system.

2. The manufacturer shall have a documented, on-going quality assurance program.
3. ISO-9001:2000 Manufacturer Certified
4. ISO-14001:2004 Environmental Management System Certified

B. Installer Qualifications: The manufacturer or an authorized agent of the manufacturer with not less than fifteen years of satisfactory experience installing elevators equal in character and performance to the project elevators.

C. Regulatory Requirements:
1. ASME/ANSI A17.1 Safety Code for Elevators and Escalators, latest edition or as required by the local building code.
2. Building Code: National.
3. NFPA 70 National Electrical Code.
4. NFPA 80 Fire Doors and Windows.
5. Americans with Disabilities Act Accessibility Guidelines (ADAAG).
6. CAN/CSA C22.1 Canadian Electrical Code.
7. CAN/CSA B44 Safety Code for Elevators and Escalators.

D. Fire-rated Entrance Assemblies: Opening protective assemblies including frames, hardware, and operation shall comply with ASTM E2074, CAN4-S104 (ULC-S104), UL10(B), and NFPA 80. Provide entrance assembly units bearing Class B or 1 1/2 hour label by a Nationally Recognized Testing Laboratory (2 hour label in Canada).

E. Inspection and testing: Elevator Installer shall obtain and pay for all required inspections, tests, permits and fees for elevator installation.
1. Arrange for inspections and make required tests.
2. Deliver to the Owner upon completion and acceptance of elevator work.

1.04 DELIVERY, STORAGE AND HANDLING

A. Manufacturing will deliver elevator materials, components and equipment and the contractor is responsible to provide secure and safe storage on job site.

1.05 PROJECT CONDITIONS

A. Prohibited Use: Elevators shall not be used for temporary service or for any other purpose during the construction period before Substantial Completion and acceptance by the purchaser unless agreed upon by Elevator Contractor and General Contractor with signed temporary agreement.

1.06 WARRANTY

A. Warranty: Submit elevator manufacturer's standard written warranty agreeing to repair, restore or replace defects in elevator work materials and workmanship not due to ordinary wear and tear or improper use or care, for 12 months from date of Substantial Completion.

1.07 MAINTENANCE

A. Furnish maintenance and call back service for a period of 12 months for each elevator from date of Substantial Completion during normal working hours, excluding callbacks. Service shall consist of periodic examination of the equipment, adjustment, lubrication, cleaning, supplies and parts to keep the elevators in proper operation.
   1. Manufacturer shall have a service office and full time service personnel within a 50 mile radius of the project site.

PART 2 PRODUCTS

2.01 MANUFACTURERS

A. Manufacturer: ThyssenKrupp Elevator
   1. Basis of Design: Endura 21A MRL Hydraulic Elevator with Machine Room.
   2. Contact: Liesje Gebler, (505) 858-2168 or Liesje.Gebler@ThyssenKrupp.com

2.02 MATERIALS, GENERAL

A. Colors, patterns, and finishes: As selected by the Architect from manufacturer's standard colors, patterns, and finish charts.

B. Steel:
   1. Shapes and bars: Carbon.
   2. Sheet: Cold-rolled steel sheet, commercial quality, Class 1, matte finish.
   3. Finish: Factory-applied baked enamel.

C. Plastic laminate: Decorative high-pressure type, complying with NEMA LD3, Type GP-50 General Purpose Grade, nominal 0.050" thickness.

D. Carpet: By others.

2.03 HOISTWAY EQUIPMENT

A. Platform: Fabricated frame of formed or structural steel shapes, gusseted and rigidly welded with a wood subfloor. Underside of the platform shall be fireproofed. The car platform shall be designed and fabricated to support one-piece loads weighing up to 25% of the rated capacity.

B. Sling: Steel stiles affixed to a steel crosshead and bolstered with bracing members to remove strain from the car enclosure.

C. Guide Rails: Steel, omega shaped, fastened to the building structure with steel brackets.

D. Guide Shoes: Slide guides shall be mounted on top and bottom of the car.

E. Buffers: Provide substantial buffers in the elevator pit. Mount buffers on a steel template that is fastened to the pit floor or continuous channels fastened to the elevator guide rail or securely anchored to the pit floor. Provide extensions if required by project conditions.

F. Jack: Jack unit shall be of sufficient size to lift the gross load the height specified. Factory test jack to insure adequate strength and freedom from leakage. Brittle material, such as gray cast iron, is prohibited in the jack construction. Provide the following jack type: Twinpost Telescopic 2-Stage holeless. Two jacks piped together, mounted one on each side of the car designed to extend in a synchronized manner when oil is pumped into the Assembly. Each jack section will be guided from within the casing or the plunger assembly used to house the section. Each plunger shall have a high pressure sealing system which will not allow for seal movement or displacement during the course of operation.

G. Automatic Self-Leveling: Provide each elevator car with a self-leveling feature to automatically bring the car to the landings and correct for overtravel or undertravel. Self-leveling shall, within its zone, be automatic and independent of the operating device. The car shall be maintained approximately level with the landing irrespective of its load.

H. Wiring, Piping, and Oil: Provide all necessary hoistway wiring in accordance with the National Electrical Code. All necessary code compliant pipe and fittings shall be provided to connect the power unit to the jack unit. Provide proper grade readily biodegradable oil as specified by the manufacturer of the power unit (see Power Unit section 2.04.G for further details)

2.04 POWER UNIT

A. Power Unit (Oil Pumping and Control Mechanism): A self-contained unit consisting of the following items:
   1. Oil reservoir with tank cover.
   2. An oil hydraulic pump.
   3. An electric motor.
   4. Oil control valve with the following components built into single housing; high pressure relief valve, check valve, automatic unloading up start valve, lowering and leveling valve, and electro-magnetic controlling solenoids.

B. Pump: Positive displacement type pump specifically manufactured for oil-hydraulic elevator service. Pump shall be designed for steady discharge with minimum pulsation to give smooth and quiet operation. Output of pump shall not vary more than 10 percent between no load and full load on the elevator car.

C. Motor: Standard manufacture motor specifically designed for oil-hydraulic elevator service. Duty rating shall be selected for specified speed and load.

D. Control System: Shall be microprocessor based and protected from environmental extremes and excessive vibrations in a NEMA 1 enclosure.

E. Oil Control Unit: The following components shall be built into a single housing. Welded manifolds with separate valves to accomplish each function are not acceptable. Adjustments shall be accessible and be

made without removing the assembly from the oil line.

1. Relief valve shall be externally adjustable and be capable of bypassing the total oil flow without increasing back pressure more than 10 percent above that required to barely open the valve.
2. Up start and stop valve shall be adjustable and designed to bypass oil flow during start and stop of motor pump assembly. Valve shall close slowly, gradually diverting oil to or from the jack unit, ensuring smooth up starts and up stops.
3. Check valve shall be designed to close quietly without permitting any perceptible reverse flow.
4. Lowering valve and leveling valve shall be adjustable for down start speed, lowering speed, leveling speed and stopping speed to ensure smooth "down" starts and stops. The leveling valve shall be designed to level the car to the floor in the direction the car is traveling after slowdown is initiated.

F. Solid State Starting: Provide an electronic starter featuring adjustable starting currents.

2.05 HOISTWAY ENTRANCES

A. Doors and Frames: Provide complete hollow metal type hoistway entrances at each hoistway opening bolted\knock down construction.
   1. Manufacturer's standard entrance design consisting of hangers, doors, hanger supports, hanger covers, fascia plates, sight guards, and necessary hardware.
   2. Main landing door & frame finish: Brushed Stainless Steel
   3. Typical door & frame finish: Brushed Stainless Steel

B. Interlocks: Equip each hoistway entrance with an approved type interlock tested as required by code. Provide door restriction devices as required by code.

C. Door Hanger and Tracks: Provide sheave type two point suspension hangers and tracks for each hoistway horizontal sliding door.
   1. Sheaves: Polyurethane tires with ball bearings properly sealed to retain grease.
   2. Hangers: Provide an adjustable device beneath the track to limit the up-thrust of the doors during operation.
   3. Tracks: Drawn steel shapes, smooth surface and shaped to conform to the hanger sheaves.

D. Hoistway Sills: Extruded metal, with groove(s) in top surface. Provide mill finish on aluminum.

2.06 CAR ENCLOSURE

A. Car Enclosure:
   1. Walls: Cab type TKLP, Wood-core cab walls laminated on both sides with high pressure plastic laminate.
   2. Canopy: Cold-rolled steel with hinged exit.
   3. Ceiling: LED Downlight ceiling in metal pan with powder coat finish.
   4. Cab Fronts, Return, Transom, Soffit and Strike: Provide panels faced with brushed stainless steel.
   5. Doors: Horizontal sliding car doors reinforced with steel for panel rigidity. Hang doors on sheave type hangers with polyurethane tires that roll on a polished steel track and are guided at the bottom by non-metallic sliding guides.

a. Door Finish: Brushed Stainless Steel

6. Cab Sills: Extruded aluminum, mill finish.
7. Handrail: Provide 1.5" diameter cylindrical metal on rear wall only. Handrails shall have a stainless steel, no. 4 brushed finish.
8. Ventilation: Manufacturer's standard exhaust fan, mounted on the car top.

B. Car Top Inspection: Provide a car top inspection station with an "Auto-Inspection" switch, an "emergency stop" switch, and constant pressure "up and down" direction and safety buttons to make the normal operating devices inoperative. The station will give the inspector complete control of the elevator. The car top inspection station shall be mounted in the door operator assembly.

2.07 DOOR OPERATION

A. Door Operation: Provide a direct current motor driven heavy duty operator designed to operate the car and hoistway doors simultaneously. Door movements shall be electrically cushioned at both limits of travel and the door operating mechanism shall be arranged for manual operation in event of power failure. Doors shall automatically open when the car arrives at the landing and automatically close after an adjustable time interval or when the car is dispatched to another landing. Closed-loop, microprocessor controlled motor-driven linear door operator, with adjustable torque limits, also acceptable. AC controlled units with oil checks or other deviations are not acceptable.

1. No Un-Necessary Door Operation: The car door shall open only if the car is stopping for a car or hall call, answering a car or hall call at the present position or selected as a dispatch car.
2. Door Open Time Saver: If a car is stopping in response to a car call assignment only (no coincident hall call), the current door hold open time is changed to a shorter field programmable time when the electronic door protection device is activated.
3. Double Door Operation: When a car stops at a landing with concurrent up and down hall calls, no car calls, and no other hall call assignments, the car door opens to answer the hall call in the direction of the car's current travel. If an onward car call is not registered before the door closes to within 6 inches of fully closed, the travel will reverse and the door will reopen to answer the other call.
4. Nudging Operation: The doors shall remain open as long as the electronic detector senses the presence of a passenger or object in the door opening. If door closing is prevented for a field programmable time, a buzzer will sound. When the obstruction is removed, the door will begin to close at reduced speed. If the infra-red door protection system detects a person or object while closing on nudging, the doors will stop and resume closing only after the obstruction has been removed.
5. Limited Door Reversal: If the doors are closing and the infra-red beam(s) is interrupted, the doors will reverse and reopen partially. After the obstruction is cleared, the doors will begin to close.
6. Door Open Watchdog: If the doors are opening, but do not fully open after a field adjustable time, the doors will recycle closed then attempt to open six times to try and correct the fault.
7. Door Close Watchdog: If the doors are closing, but do not fully close after a field adjustable time, the doors will recycle open then attempt to close six times to try and correct the fault.
8. Door Close Assist: When the doors have failed to fully close and are in the recycle mode, the door drive motor shall have increased torque applied to possibly overcome mechanical resistance or differential air pressure and allow the door to close.

B. Door Protection Devices: Provide a door protection system using 150 or more microprocessor controlled infra-red light beams. The beams shall project across the car opening detecting the presence of a passenger or object. If door movement is obstructed, the doors shall immediately reopen.

2.08CAR OPERATING STATION

A. Car Operating Station, General: The main car control in each car shall contain the devices required for specific operation mounted in an integral swing return panel requiring no applied faceplate. Swing return shall have a brushed stainless steel finish. The main car operating panel shall be mounted in the return and comply with handicap requirements. Pushbuttons that illuminate using long lasting LED's shall be included for each floor served, and emergency buttons and switches shall be provided per code. Switches for car light and accessories shall be provided.

B. Emergency Communications System: Integral phone system provided.

C. Column Mounted Car Riding Lantern: A car riding lantern shall be installed in the elevator cab and located in the entrance. The lantern, when illuminated, will indicate the intended direction of travel. The lantern will illuminate and a signal will sound when the car arrives at a floor where it will stop. The lantern shall remain illuminated until the door(s) begin to close.

2.09 CONTROL SYSTEMS

A. Controller: The elevator control system shall be microprocessor based and software oriented. Control of the elevator shall be automatic in operation by means of push buttons in the car numbered to correspond to floors served, for registering car stops, and by "up-down" push buttons at each intermediate landing and "call" push buttons at terminal landings.

B. Automatic Light and Fan shut down: The control system shall evaluate the system activity and automatically turn off the cab lighting and ventilation fan during periods of inactivity. The settings shall be field programmable.

2.10 HALL STATIONS

A. Hall Stations, General: Buttons shall illuminate to indicate call has been registered at that floor for the indicated direction. Provide one pushbutton riser with brushed stainless steel faceplates.

1. Phase 1 firefighter's service key switch, with instructions, shall be incorporated into the hall station at the designated level.

B. Floor Identification Pads: Provide door jamb pads at each floor. Jamb pads shall comply with Americans with Disabilities Act (ADA) requirements.

C. Corridor Call Station Pictograph Signs: Provide hall push button stations with engraved text and graphics as required by authorities having jurisdiction, indicating that in case of fire elevators are out of service and exits should be used instead.

2.11 MISCELLANEOUS ELEVATOR COMPONENTS

A. Oil Hydraulic Silencer: Install an oil hydraulic silencer (muffler device) at the power unit location. The silencer shall contain pulsation absorbing material inserted in a blowout proof housing arranged for inspecting interior parts without removing unit from oil line.

-

PART 3 EXECUTION

3.01 EXAMINATION

A. Before starting elevator installation, inspect hoistway, hoistway openings, pits and machine rooms/control space, as constructed and verify all critical dimensions, and examine supporting structures and all other conditions under which elevator work is to be installed. Do not proceed with elevator installation until unsatisfactory conditions have been corrected in a manner acceptable to the installer.

B. Installation constitutes acceptance of existing conditions and responsibility for satisfactory performance.

3.02 INSTALLATION

A. Install elevator systems components and coordinate installation of hoistway wall construction.
   1. Work shall be performed by competent elevator installation personnel in accordance with ASME A17.1, manufacturer's installation instructions and approved shop drawings.
   2. Comply with the National Electrical Code for electrical work required during installation.

B. Coordination: Coordinate elevator work with the work of other trades, for proper time and sequence to avoid construction delays. Use benchmarks, lines, and levels designated by the Contractor, to ensure dimensional coordination of the work.

C. Alignment: Coordinate installation of hoistway entrances with installation of elevator guide rails for accurate alignment of entrances with cars. Where possible, delay final adjustment of sills and doors until car is operable in shaft. Reduce clearances to minimum safe, workable dimensions at each landing.

D. Lubricate operating parts of system where recommended by manufacturer.

3.03 FIELD QUALITY CONTROL

A. Acceptance testing: Upon completion of the elevator installation and before permitting use of elevator, perform acceptance tests as required by A17.1 Code and local authorities having jurisdiction. Perform other tests, if any, as required by governing regulations or agencies.

B. Advise Owner, Contractor, Architect, and governing authorities in advance of dates and times tests are to be performed on the elevator.

3.04 ADJUSTING

A. Make necessary adjustments of operating devices and equipment to ensure elevator operates smoothly and accurately.

3.05 CLEANING

-

A. Before final acceptance, remove protection from finished surfaces and clean and polish surfaces in accordance with manufacturer's recommendations for type of material and finish provided. Stainless stall shall be cleaned with soap and water and dried with a non-abrasive surface; shall not be cleaned with bleached-based cleansers.

B. At completion of elevator work, remove tools, equipment, and surplus materials from site. Clean equipment rooms and hoistway. Remove trash and debris.

3.06 PROTECTION

A. At time of Substantial Completion of elevator work, or portion thereof, provide suitable protective coverings, barriers, devices, signs, or other such methods or procedures to protect elevator work from damage or deterioration. Maintain protective measures throughout remainder of construction period.

3.07 DEMONSTRATION

A. Instruct Owner's personnel in proper use, operations, and daily maintenance of elevators. Review emergency provisions, including emergency access and procedures to be followed at time of failure in operation and other building emergencies. Train Owner's personnel in normal procedures to be followed in checking for sources of operational failures or malfunctions.

B. Make a final check of each elevator operation, with Owner's personnel present, immediately before date of substantial completion. Determine that control systems and operating devices are functioning properly.

3.08 ELEVATOR SCHEDULE

A. Elevator Qty. 1
1. Elevator Model: Endura 21A Twinpost Telescopic 2-Stage
2. Rated Capacity: 2100 lbs.
3. Rated Speed: 100 ft./min.
4. Operation System: TAC32
5. Travel: 15’-8”
6. Landings: 2 total
7. Openings: 2 Front
8. Clear Car Inside: 5' - 8" wide x 4' - 3" deep
9. Cab Height: 8'-0" nominal
10. Hoistway Entrance Size: 3' - 0" wide x 7'-0" high
11. Door Type: Single Speed
12. Power Characteristics: 208 volts, 3 Phase, 60 Hz.
13. Seismic Requirements: Design Category B
14. Fixture & Button Style: Traditional (with stainless steel faceplates).

END OF SECTION

SECTION 15000
MECHANICAL GENERAL CONDITIONS

PART 1 GENERAL

1.01 SCOPE

A. The scope of the work included under this Division of the specifications shall include a complete mechanical system as shown on the plans and as specified herein. The Architectural General Conditions of these specifications shall form a part and be included under this section of the specifications. The Mechanical Contractor shall provide all supervision, labor, material, equipment, machinery, plant and any and all other items necessary to complete the mechanical system. All other items of equipment are specified in the singular; however, the Mechanical Contractor shall provide and install the number of items of equipment as indicated on the drawings, and as required for complete systems.

B. It shall be noted that work under this section of the specifications includes Section 15000, Mechanical General Conditions; Section 15180, Insulation for Mechanical Systems; Section 15400, Plumbing; 15800, Heating, Ventilating and Air Conditioning; and Section 15900, Test and Balance.

C. Mechanical drawings show general arrangement of piping, ductwork, equipment, etc. Follow as closely as actual building construction and work of other trades will permit. Consider Architectural and Structural drawings as part of this work in so far as these drawings furnish information relating to design and construction of the building. Because of small scale of mechanical drawings it is not possible to indicate all offsets, fittings and accessories which may be required. Investigate structural and finish conditions affecting this work and arrange work accordingly. Provide such fittings, valves and accessories required to meet conditions.

PART 2 MATERIALS

2.01 CODES RULES, PERMITS, FEES

A. The Mechanical Contractor shall give all necessary notices, obtain all permits and pay all government and state sales, taxes, fees, and other costs, including utility connections or extensions, in connection with his work; file all necessary plans, prepare all documents and obtain all necessary approvals of all governmental departments having jurisdiction; obtain all required certificates of inspection for his work and deliver same to the Owner or his representative before request for acceptance and final payment for the work. The Mechanical Contractor shall include in the work, without extra cost to the Owner, any labor, materials, services, apparatus, drawings, in other to comply with all applicable laws, ordinances, rules and regulations whether or not shown on drawings and/or specified.

2.02 COMPLIANCE

A. All materials furnished and all work installed shall comply with the National Fire Codes of the National Fire Protection Association, with the requirements of all governmental departments having jurisdiction. All materials and equipment for the electrical portion of the mechanical system shall bear the approval label, shall be listed by the Underwriters Laboratories, Inc., and bear the UL label. All mechanical equipment, electrical wiring and devices shall be in accordance with the National Electric Code (NBC).

2.03 INTENT

A. It is the intention of these specifications and drawings to call for finished work, tested, and ready for operation. Wherever the word "provide" is used, it shall mean "furnish and install complete and ready for use". Minor details not usually shown or specified, but necessary for the proper installation and operation, shall be included in the work, the same as if herein specified or shown.

2.04 SURVEYS AND MEASUREMENTS

A. The Mechanical Contractor shall base all measurements, both horizontal and vertical from established benchmarks. All work shall agree with these established lines and levels. Verify all measurements at site and check corrections of same as related to the work. Should the Mechanical Contractor discover any discrepancy between actual measurements and those indicated, which prevents following good practice or the intent of the drawings and specifications, he shall notify the Engineer or his representative, through the General Contractor, and shall not proceed with his work until he has received instructions from the Engineer or his representative. The Contractor must carefully locate and verify all of the existing utilities to be used as a part of this contract.

2.05 DRAWINGS

A. Drawings are diagrammatic and indicate the general arrangement of systems and work included in the contract. Drawings are not to be scaled. The architectural drawings and details shall be examined for exact locations of fixtures and equipment. Where they are not definitely located, this information shall be obtained from the Engineer or his representative, before proceeding with the work. The Mechanical Contractor shall follow drawings in laying out work and check drawings of other trades to verify spaces in which work will be installed. Maintain maximum headroom and space conditions at all points. Where headroom or space conditions appear inadequate the Architect shall be notified before proceeding with installation.

2.06 "OR EQUAL"

A. Wherever the words "approved equal", "equal" or words to the same effect are used in connection with any specific material, it is to be understood that such words mean any material or work of any kind claimed to be an equal in quality to the work or material specified and shall be so approved in writing by the Engineer or his representative, except as noted. It is further understood that no material or work shall be presented to the Engineer or his representative as work or material equal to that specified without the full understanding on the part of the manufacturers and agents for the so-called "equal" material, and the full understanding on the part of the Contractors, that the Engineer or his representative is to use his own judgment in the matter; that his decision is final, and that in the event of an adverse condition, no claim of any sort shall be made against the Owner, or his representative, Architect or Engineer.

2.07 SHOP DRAWINGS

A. The Mechanical Contractor shall submit for approval detailed shop drawings of all equipment and all material required to complete the project, and no material or equipment may be delivered to the jobsite or installed until the Mechanical Contractor has in his possession the approved shop drawings for the particular material or equipment. The shop drawings shall be complete as described herein. The Mechanical Contractor shall furnish the number of copies required by the General and Special Conditions of the contract, but in no case less than four (4) copies. Prior to delivery of any material to the jobsite, and sufficiently in advance of requirements to allow the Owner or his representative ample time for checking, submit for approval: details, dimensions, operating clearances, performance characteristics and capacity. Each item of equipment

proposed shall be a standard catalog product of an established manufacturer and of equal quality, finish and durability to that specified and/or scheduled.

B. Submit shop drawings for the equipment specified in the related sections under this Division. Format of submittals shall be bound in a three-ring binder with a master index and tabbed sections for each type of equipment.

C. The first section shall consist of name, address and phone number of Architect, Engineer, Contractors, Subcontractors and Vendors. Also include a complete list of equipment supplied by each Vendor. Provide sections for each type of item of equipment. Include descriptive literature of each manufactured item. Literature shall show capacities of equipment used and be marked indicating each specified item with applicable data underlined.

2.08 EQUIPMENT DEVIATIONS

A. Where the Mechanical Contractor proposes to use an item of equipment other than that specified or detailed on the drawings, which requires any redesign of the structure, partitions, foundations, piping, wiring or any other part of the mechanical, electrical or architectural layout, all such redesign, and all new drawings and detailing required, shall be prepared by the Mechanical Contractor at his own expense and approved by the Engineer or his representative. Where such approved deviation requires a different quantity and arrangement of ductwork, piping, wiring, conduit and equipment from that specified or indicated on the drawings, the Mechanical Contractor shall furnish and install any such ductwork, piping, structural supports, insulation, controllers, motors, starters, electrical wiring and conduit, and any other additional equipment required by the system at no additional cost to the Owner.

2.09 COOPERATION WITH OTHER TRADES

A. The Mechanical Contractor shall give full cooperation to other trades and shall furnish in writing to the Contractor, with copies to the Engineer or his representative, any information necessary to permit the work of all trades to be installed satisfactorily and with the least possible interference or delay.

2.10 PROTECTION

A. The Mechanical Contractor shall protect all work and material from damage by his workmen, and shall be liable for all damage thus caused and replace all damaged materials at no cost to the Owner. The Mechanical Contractor shall be responsible for work and equipment until finally inspected, tested and accepted. He shall protect work against theft, injury or damage, and shall carefully store material and equipment received on-site which is not immediately installed. He shall close open ends of work with temporary covers or plugs during storage and construction to prevent entry of obstructing material.

2.11 SCAFFOLDING, RIGGING, HOISTING

A. The Mechanical Contractor shall furnish all scaffolding, rigging, hoisting and services necessary for erection and deliver onto the premises any equipment and apparatus furnished. The Contractor will remove the necessary equipment from the premises when no longer required.

2.12 EXCAVATION

A. Mass excavation to approximate building levels will be carried out under a section of the architectural specifications. The Mechanical Contractor shall; however, do all trench and pit excavation and backfilling required for work under this section of the specifications, inside and outside of the building, including repairing of finished surfaces, all required shoring, bracing and pumping and all protection for safety of persons and property. Local or State Safety Codes shall be strictly observed. In addition, it shall be the responsibility of the Mechanical Contractor to check the indicated elevation of the utilities entering and leaving the building. If such elevations require excavations slower than the footing levels, the Engineer or his representative shall be notified of such conditions and a redesign shall be made before excavations are commenced. It is also the responsibility of the Mechanical Contractor to make the excavations at the minimum required depths in order not to undercut the footing. Filling, backfilling, and compactions shall be as specified under the architectural portion of these specifications.

B. Backfill may be native material except that all material from six inches (6") below the pipe bottom to six inches above the top of the pipe must pass a 3/4" sieve. If the native material is determined to be too rocky by the Engineer, he may require imported material for pipe bedding.

2.13 MATERIALS AND WORKMANSHIP

A. All materials and apparatus required for the work, except as specifically specified otherwise, shall be new, of first-class quality, and shall be furnished, delivered, erected, connected and furnished in every detail, and shall be so selected and arranged as to fit properly into the building spaces. Where no specific kind or quality of material is given a first-class standard article as approved by the Engineer or his representative shall be furnished. The Mechanical Contractor shall furnish the services of an experienced superintendent, who shall be constantly in charge of the installation of the work, together with all skilled workmen, fitters, metal workers, welders, helpers, and labor required to unload, transfer, erect, connect, adjust, start, operate and test each system.

B. Unless otherwise specifically indicated on specifications all equipment and materials shall be installed with the approval of the Engineer or his representative in accordance with the instructions of the manufacturer. This includes the performance of such tests as he manufacturer instructs.

2.14 MOTORS

A. Motors shall be built in accordance with the latest standards of NEMA and as specified. Motors shall be tested in accordance with standard of A.S.A., C50 and conform thereto for insulation resistance and dielectric strength. Provide motors manufactured by General Electric, Westinghouse, Allis Chalmers, or Century designed for quiet continuous operations with forty degree (40) C. rise at full load and rated speed as individually specified. Motors shall be of the same make except those incorporated in package units, and all, including those in package units, shall be provided with ball-bearings and conduit connection boxes. Unless stated otherwise, motors 1 HP and larger shall be suitable for operation 3 phase, 60 cycle, 460 volt current. Motors 3/4 HP and smaller shall be suitable for operation on single phase, 60 cycle, 120 volt current. All motors shall be provided with thermal overload protection.

B. All motor starters shall be provided by the Mechanical Contractor if integral with the equipment. All three phase magnetic starters shall be furnished with three coil overload protection. All starters which are not integral with the equipment and other electrical control equipment installed in the damp, moist or areas of special conditions, shall be designed and approved for the installation.

2.15 QUIET OPERATION AND VIBRATIONS

A. All work shall operate under all conditions of load without any sound of vibration which is objectionable in the opinion of the Owner or his representative. In case of moving machinery sound, sound or vibration noticed outside its own room will be considered objectionable. Sound or vibration conditions considered objectionable by the Owner or his representative shall be corrected in an approved manner by the Mechanical Contractor at hiexpense. Vibration control shall be by means of approved vibration eliminators in a manner as recommended by the manufacturer of the eliminators.

2.16 ACCESSIBILITY

A. The Mechanical Contractor shall be responsible for the sufficiency of the size of shafts and chases, the adequate clearance in double partitions and hung ceilings for the proper installation of his work. The Contractor shall cooperate with the General Contractor and all other contractors whose work is in the same space, and shall advise the General Contractor of his requirements. Such spaces and clearances shall, however, be kept to the minimum size required. The Mechanical Contractor shall locate all equipment which must be serviced, operated or maintained in fully accessible positions. Equipment shall include but not be limited to: valves, traps, cleanouts, motors and controllers. If required for better accessibility, any change shall be approved by the Owner or his representative. The Mechanical Contractor shall provide the General Contractor the exact locations of access panels for each concealed valve, control, damper or other device requiring service. Access panels not shown in the architectural drawings shall be provided and
installed by the Mechanical Contractor and as specified in architectural sections of the specifications. Locations of these panels shall be submitted in sufficient time to be installed in the normal course of work.

2.17 FOUNDATIONS, SUPPORTS, PIERS, ATTACHMENTS

A. The Contractor shall furnish and install all necessary foundations, supports, pads, and bases required for all equipment furnished under this contract, unless otherwise noted. All equipment where foundations are indicated, furnish and install concrete pads as shown. All pads shall be extended six inches (6") beyond equipment base in all directions with top edges chamfered. All equipment, unless otherwise shown, shall be securely attached to the building structure in an approved manner. Attachments shall be of a strong and durable nature and any attachments that are, in the opinion of the Engineer or his representative, not strong enough shall be replaced as directed.

2.18 ELECTRICAL CONNECTIONS

A. The Electrical Contractor shall furnish and install all power wiring except the following when rated at 25 VAC or less: (1) temperature control wiring; (2) equipment control wiring; and (3) interlocking wiring. The Electrical Contractor shall furnish and install all power wiring complete from power source to motor or equipment junction box, including power wiring through starters. The Electrical Contractor shall furnish and install all starters not factory mounted on equipment or otherwise noted. The Mechanical Contractor shall furnish and install all temperature control wiring, interlock wiring and equipment control wiring of 25 VAC or less for the equipment that he furnishes. The Mechanical Contractor shall furnish a starter to the Electrical Contractor, where scheduled on the drawings or integral with the equipment. The Mechanical Contractor shall provide and be responsible for the heater in all starters that the Mechanical Contractor furnishes.

2.19 CUTTING AND PATCHING

A. The Mechanical Contractor shall be responsible for all framing, cutting and patching necessary to install the work specified in this section. Patching shall match adjacent surfaces and be performed by qualified workmen approved by the City Engineer or his representative. All work shall be in accordance with the applicable Architectural section of these specifications.

B. Methods of cutting: Openings cut through concrete and masonry shall be made with masonry saws and/or core drills and at such locations acceptable to the Architect/Engineer. Impact-type equipment shall not be used except where specifically acceptable to the Architect/Engineer. Openings in precast concrete slabs for pipes, conduits, outlet boxes, etc., shall be core drilled to exact size.

C. Restoration: All openings shall be restored to “as-new” condition under the appropriate specification Section for the materials involve, and shall match remaining surrounding materials and/or finishes.

D. Masonry: Where openings are cut through masonry walls, provide and install lintels or other structural supports to protect the remaining masonry. Adequate supports shall be provided during the cutting operation to prevent any damage to the masonry occasioned by the operation. All structure members, supports, etc. Shall be of the proper size and shape, and shall be installed in a manner acceptable to the Architect/Engineer.

E. Plaster: All mechanical work in areas containing plaster shall be completed prior to the application of the finish plaster coat. Cutting of finish plaster coat will not be permitted.

F. Special Note: No cutting, boring or excavating which will weaker the structure shall be undertaken.

2.20 ESCUTCHEON PLATES

A. Escutcheon plates shall be provided for all exposed uninsulated pipes and all exposed conduit passing through walls, floors and ceilings. Plates shall be nickel-plated, of the single piece type, sized to match the pipe or conduit. Where plates are provided for pipes passing through sleeves which extend above the floor surface, provide deep recessed plates to conceal the pipe sleeves.

2.21 GUARDS

A. The Mechanical Contractor shall provide belt drivers and rotating machinery with readily removable guards. Guards not furnished with equipment requiring same shall consist of heavy angle iron frames, hinged and latched, with heavy galvanized iron wire crimped mesh securely fastened to frames.

2.22 WATERPROOFING

A. Where any work pierces waterproofing including waterproof concrete, the method of installation shall be as approved by the Engineer before work is done. The Mechanical Contractor shall furnish all necessary sleeves, caulking and flashing required to make openings absolutely watertight.

2.23 PIPING INSTALLATION

A. All piping at one or more points shall be installed so that they can be easily drained. Provid means of drainage of low points of all piping without disconnecting pipe. If other than valves are contemplated, the Owner or his representative's permission shall be obtained. All installed

pipelines shall be straight and remain straight against strains tending to cause distortion, noise, damage, or improper operation. Piping shall be installed square with the building construction and risers shall be plumb. All piping must be kept clean and free from scale or loose dirt when installed, and must be kept clean during the completion of the installation. All openings in the piping system shall be capped or plugged while awaiting further connection whenever there is a reasonable hazard of dirt entering the piping system. Soil, waste and drainage lines shall be properly graded. Cold water and gas lines shall be slightly pitched toward drain points.

2.24 VALVES

A. Unless otherwise specified, all valves shall be Stockham, Nibco-Scott, Crane or Hammond suitable for 125 PSI working pressure. Gate valves shall be used on domestic water piping. Gate valves three inches (3") and smaller shall be brass equal to a Stockham figure B-100 or B-108. Gate valves larger than three inches (3") shall be equal to a Stockham figure G-613.

B. Gate valves, ball valves or butterfly valves may be used on heating and cooling system water; gate valves shall be as previously stated. Ball valves shall be equal to Stockham figure S-214 soldered or threaded through two inch (2"). Butterfly valves shall be equal to a Stockham figure LD-712 arranged so that either side of the piping may be removed without draining the valves.

C. Valve locations are either shown or covered by note on the plans. However, the Contractor shall be held responsible for furnishing and installing all valves inadvertently omitted from the drawings in locations where valves are customarily furnished for operation and maintenance without undue disruption of service.

D. The Mechanical Contractor shall prepare and install in a suitable glazed frame, typewritten valve charts giving the number, location and function of each line and valve installed under this contract. Provide and install for each valve, a stamped brass tag, numbered to correspond to the number indicated on the valve chart. Tags shall be secured to valve stems by heavy, figure-eight hooks.

2.25 UNIONS

A. Unions shall be provided at all equipment and wherever else necessary to allow for ease in making repairs or replacements. Furnish and install approved insulated couplings at all connections between dissimilar metals, steel to copper.

2.26 INSTALLATION OF THREADED PIPE

A. Screw joint shall be made with lubricant applied to the male threads only; threads shall be full cut and not more than three (3) threads on the pipe shall remain exposed. All new cut ends must be deburred and reamed.

2.27 JOINTS IN COPPER WATER PIPING

A. The pipe shall be cut square and true. The end shall be deburred, reamed, and/or sized as necessary. The pipe shall be cleaned with medium grit emery cloth and if the fitting socket is tarnished or shows oxidation, it shall be likewise cleaned. The pipe and fitting shall be fluxed with Nokorode Paste, or approved equal. Joints shall be made up with the type of solder as hereinafter specified. Reducing tees formed by extruding the larger pipe shall not be acceptable

for pipes two (2") inches or smaller. On pipe 2-1/2 inches and larger extruding the reducing tee will be acceptable provided flux is applied to both tee and pipe and the joint silver soldered with a torch using a mixture of oxygen and acetylene.

2.28 IDENTIFICATION OF PIPING

A. All service piping which is accessible for maintenance operations shall be identified with SETMARK semi-rigid plastic markers or equal. Direction of flow arrows are to be included on each marked, unless otherwise specified.

B. For pipes under 3/4 inches OD, brass identification tags 1-1/2" in diameter will be fastened securely at specified locations.

C. Locations for pipe markers to be as follows:

At each pipe passage through wall, floor and ceiling construction.
At each pipe passage to underground.
On all horizontal pipe runs - marked every 15 feet.
At each branch and riser take-off.
Adjacent to each valve and fitting (except on plumbing fixtures and equipment).

2.29 CHECKING AND TESTING MATERIALS AND/OR EQUIPMENT

A. Before the work is accepted, an authorized representative of the manufacturer of the installed materials and/or equipment shall personally inspect the installation and operation of his materials and/or equipment to determine that it is properly installed and in proper operating order. The qualifications of the representative shall be appropriate to the technical requirements of the installation. The qualifications of the representative shall be submitted to the owner for approval. The decision of the owner concerning the appropriateness of the representative shall be final. Testing and checking shall be accomplished during the course of the work where required by work being concealed, and at the completion of the work otherwise. In addition, the Contractor shall submit to the Architect/Engineer a signed statement from each representative certifying as follows: "I certify that the materials and/or equipment listed below have been personally inspected by the undersigned authorized manufacturer's representative and is properly installed and operating in accordance with the manufacturer's recommendations".

B. Check inspections shall include plumbing equipment and insulation and such other items hereinafter specified or specifically designated by the Architect/Engineer.

2.30 COOPERATION AND CLEANUP

A. It shall be the responsibility of each trade to cooperate fully with the other trades on the job to help keep the job site in a clean and safe condition. At the end of each day's work, each trade shall properly store all of his tools, equipment and materials and shall clean his debris from the job. Upon the completion of the job, each trade shall immediately remove all of his tools, equipment, any surplus materials and all debris caused by that portion of the work.

PART 3 EXECUTION

3.01 SYSTEM CHECK AND CLEANING

A. Final Check-up: At the completion of all work, all equipment on the project shall be checked and thoroughly cleaned including all other areas around or in equipment provided under this section.

B. Painting: At the completion of all work all equipment on the project shall be checked for painting damage, and any factory finished paint that has been damaged shall be repaired to match the adjacent areas. Any metal or specially covered areas that have been deformed shall be replaced with new material and repainted to match the adjacent areas.

3.02 GUARANTEE

A. The entire mechanical system shall be guaranteed for a period of one year after final acceptance of the project against any defects in equipment, material or workmanship. Any necessary labor, equipment or material required to correct such defects shall be furnished and paid for by the Mechanical Contractor without further cost to the Owner. Provide the Owner a written guarantee on the above item. Deliver to the Engineer or his representative for his approval.

END OF SECTION

SECTION 15180
INSULATION FOR MECHANICAL SYSTEMS

PART 1 GENERAL

1.01 GENERAL

A. Conditions of the contract and Division I apply to this Division except that any requirements for prior approval of equipment does not apply to this Division. The work under this section consists of furnishing and installing all thermal insulation on ducts, pipes and all other equipment in Division 15 which are indicated to receive insulation. See also Section 15000 for General Requirements applying to this and all other Division 15 sections.

1.02 SUBMITTAL DATA

A. The following submittal data shall be provided before any installation is made: Name of the Insulation Contractor; a narrative summary of material and method of installation for each system or component to be insulated (i.e. domestic water piping, ductliner, etc.); certified letter of compliance as required hereinafter; and descriptive literature for all material including insulation, covering, jackets, adhesives, etc.

PART 2 PRODUCTS

2.01 GENERAL INSULATION

A. All insulation materials shall have composite fire and smoke hazard ratings as tested by procedure ASTM-84, NFPA-255, and UL 723 not exceeding: smoke developed - 50; flame spread - 25; fuel contributed - 50. All components of the insulation (insulation, adhesives, and jackets or facings) shall have been tested as COMPOSITE product and shall bear labels showing the flame spread, smoke-developed, and fuel contributed properties do not exceed 25, 50 and 50 respectively. All insulation accessories (glass cloth, cement, adhesives, mastic, etc.) shall have the same component ratings as listed above. All products and/or their shipping cartons shall have a label affixed, indicating flame, fuel and smoke ratings do not exceed the above requirements. Paper laminate jacket, if used, shall be permanently fire and smoke resistant. Chemicals used for treating paper in jacket laminates shall not be water soluble and shall be unaffected by water and humidity. The use of canvas or other flammable materials is prohibited and any found on the job shall be removed at the Contractor's expense and at no additional cost to the Owner. The insulation and related items specified hereinafter by specific manufacturer's designation is intended to establish a standard of quality and is not intended to exclude equal products of reputable manufacturers.

2.02 PIPING SYSTEMS

A. Piping shall be insulated by the following schedule with Owens/Corning Fiberglass 25 ASJ/SSL pipe insulation all service jacket with self-sealing lap.

PIPING TYPES	PIPING SIZES 1/2"-1"	1-1/4"-4"	4" +
Domestic cold water	-	-	-
Domestic hot water	1"	2”	-
Condensate drains	1"	1"	-
Roof drains and Overflows	-	1”	1”

B. Manville Flame-Safe GC or Armstrong Accotherm insulation of thermally equivalent thickness may be used in lieu of the above.

C. All piping including domestic cold water piping which is exposed outside the building shall be insulated with a minimum of one inch (1") insulation or as specified above. Provide metal jacketing as described below. See drawings for heat tape requirement.

D. All insulated piping which runs exposed, either inside or outside the building, shall be jacketed with aluminum sheet metal, banded 4" on center and sealed water tight. All joints shall be caulked with silicon caulking/sealer. Piping running exposed within boiler rooms shall not be required to have aluminum jacketing. Piping above 10 feet from a finished floor, platform or bleacher shall
not be required to be jacketed.

2.03 DUCT SYSTEMS

A. All metal air conditioning or other ducts indicated to have ductliner shall be lined with thermal and acoustic ductliner, Manville Linacoustic or approved equal, 1-1/2 pound per cubic foot density, 1-1/2" thick (R-5) on refrigerated air duct or equivalent unless otherwise noted on the plans having a thermal conductance of 0.25 BTU/sq. ft./hr./degree F./inch thickness at 75F. mean temperature and with a noise reduction coefficient (NCR) of .20, Underwriters Laboratories Inc. fire hazard classification of flame spread 25, fuel contributed 50 and smoke developed 50 or better.

B. All metal air conditioning or other ducts indicated to have insulation shall be provided with Ductwrap. Ductwrap shall be Manville Microlite Duct Insulation, 1.0 PCF density, 2" thick (R-5) with a thermal conductivity equal to .265 at 75 degrees F. Wrap shall have an FSK fiberglass reinforced foil face.

.

PART 3 EXECUTION

3.01 PIPING INSTALLATION

A. Pipe Insulation shall be applied on clean, dry surfaces. All insulation shall be continuous through opening and sleeves. Insulation on all cold surfaces where vapor barrier jackets are used must be applied with a continuous, unbroken vapor seal. Hangers, supports, anchors, etc., that are secured directly to cold surfaces must be adequately insulated and vapor sealed to prevent condensation. Inserts between the pipe and pipe hangers shall consist of a length of rigid pipe insulation of thickness equal to the adjoining insulation and shall be provided with vapor barrier where required. Insulation inserts shall not be less than six inches (6") long.

B. Metal shields shall be applied between all hanger or supports and the pipe insulation unless otherwise noted. Shields shall be formed to fit the insulation and shall extend up to the centerline of the pipe and the length specified for the hanger inserts. All fittings and valves shall be insulated by wrapping with fiberglass blanket, wrapped firmly under compression to thickness equal to adjoining pipe insulation.

C. Longitudinal jacket laps and butt strips shall be smoothly secured with adhesive. Valves and fittings, except unions and flanges, may be insulated with factory premolded Zeston Hi-Lo Temp PVC one-piece insulated fitting covers of the same thickness as the adjacent pipe insulation. The fitting covers shall be secured by stapling or tack fastening. Insulation shall be beveled at ends with insulation cement at check valves, valves, unions and flanges. These items then shall be separately insulated with larger sectional insulation overlapping the adjacent insulation such

that the valve or other fitting so insulated may be uncovered without damage to the adjacent piping covering. Strainers shall be insulated in such a manner that the basket may be removed without damage to the adjacent insulation. Valves shall be insulated to the bonnet only. All exposed raw end of insulation shall be finished with insulating cement.

3.02 DUCT INSTALLATION

A. Ducts indicated to have internal insulation shall be lined by carefully adhering the liner in a continuous piece to clean, flat metal sheets with quick-tacking rubber base adhesive. The duct shall be formed, with the liner attached, in a sheet brake. The coated side of the liner shall face the air stream, and all exposed edges shall be coated with adhesive. Ducts shall also have the liner additionally secured with mechanical fasteners. Spacing of fasteners shall be on approximately fifteen inches (15") centers, and shall be adhered with manufacturer's recommended adhesive. The insulation shall be held in place with surface anchor washers, speed clips or equal. All projecting ends of fasteners shall be cut off flush with washer.

B. Ductwrap shall be applied in strict accordance with manufacturer's instructions. Wrap shall be continuous with overlapping sections. Fasten and seal overlap joints according to manufacturer's recommendations.

C. Insulation shall be butted tightly at joints and vapor barrier facing shall be overlapped a minimum of two (2") inches. Insulation should be removed from lap prior to stapling. All seams shall be stapled approximately six (6") inches on center with outward clinching staples, then sealed with a foil vapor barrier tape or vapor barrier mastic.

D. Where ducts are over 14" in width, the ductwrap shall be additionally secured to the bottom of rectangular ducts with mechanical fasteners spaced on 18" centers (maximum) to prevent sagging of insulation. Seal penetrations of facing so as to provide a vapor-tight system.

3.03 SHOP DRAWINGS

(1) Data sheets for pipe and duct insulation systems.
(2) Adhesives, and
(3) Fitting and valve covers.

END OF SECTION

SECTION 15400
PLUMBING

PART 1 GENERAL

1.01 CONTENTS

A. This section of the specifications contains items applicable only to the Plumbing Section. Section 15000, Mechanical General Conditions, contains items which also apply. This section of the specifications supplements some of the statements therein so as to apply to the plumbing system.

1.02 SCOPE OF WORK

A. It is the intent of these specifications and drawings to furnish a plumbing system, inside and outside of the building, complete, fully adjusted and ready to use. All work and material must conform to all State and Local Plumbing Codes in every respect.

B. Contractor shall submit shop drawings to the Engineer for approval prior to commencing work. Furnish submittals on all proposed rough-in modifications to waste, water, gas, vent and roof drain piping systems illustrated on contract documents

PART 2 MATERIALS

2.01 PIPE AND FITTINGS

A. All metal pipe to be straight, free from dents, scars or burrs with ends reamed cut smooth, and as further specified for the individual applications. All changes in pipe sizes in cast iron soil pipe shall be made with reducing fittings. Wye fittings with l/8 or l/l6 bends or combination wye and l/8 bend fittings shall be used where changes in direction occur. All piping shall be manufactured in the USA.

2.02 INTERIOR SEWER - BELOW GROUND

A. All soil lines below grade within the building shall be of the best quality standard weight no-hub cast iron or Schedule 40 PVC. Cast iron pipe fittings shall be coated inside and out with varnish. See Section 15000 for backfill requirements.

2.03 BUILDING SEWER

A. From a point five feet (5') beyond the building or as indicated to the sewer main or termination, the building sewer shall be schedule 40PVC sewer pipe. See Section 15000 for backfill requirements.

2.04 SEWER, WASTE AND VENT PIPING

A. All sewer, waste and vent piping shall be standard weight no-hub cast iron with tarred fittings or schedule 40 PVC. The Contractor shall properly brace all piping and comply to all manufacturer's instructions.

2.05 DOMESTIC WATER LINES

A. All domestic hot and cold water lines including evaporative cooler supply and drain lines within the building above ground shall be type "L" hard drawn copper pipe with sweat soldered wrought

copper fittings and 95/5 lead free solder. All piping below grade shall be type "K" copper with silver solder joints unless otherwise indicated. Provide dielectric unions wherever copper and ferrous metals are joined. Dielectric separation using brass unions or valves shall not be considered an acceptable method of separation. From a point five feet (5') outside the building the Contractor may use ductile iron pipe in lieu of type "K" copper for the site water piping.

2.06 JOINTS IN UNDERGROUND CAST IRON SOIL PIPE

A. Use standard no-hub fittings. Joints between cast iron and clay tile or PVC shall have a gasket and lubricant made for this purpose.

B. Joints in no-hub cast iron pipe shall be made with a one piece neoprene gasket and stainless steel clamp meeting the standards of CISPI 310 and ASTM C 564.

2.07 GAS PIPING

A. The gas distribution system shall be installed as indicated on the drawings complete with all valves and other required items.

B. All pipe used for the fabrication of gas piping systems shall be schedule 40 black steel pipe. All steel pipe shall be provided with plain ends and assembled with welded fittings on a pipe 1-1/2” and larger. Joints in 1-1/4” and smaller pipe may be screwed. Under no circumstance shall pipe smaller than 3/4” be used. At the Contractor’s option, medium density polyethylene resin pipe equal to Plexco PE 24076 meeting ASTM 3350, Type II, grade LPE 24 may be used underground.

C. Gas piping system installed underground shall utilize pipe which has been factory coated with Scotchkote protective resin No. 212 or equal. All materials, surface preparation, application and testing shall conform to Federal Specification L-C-530 B-Type 2, dated June 4, 1970.

D. Underground welded joints and fitting shall be coated with Scotchkote No. 306 epoxy resin and taped with vinyl Scotchwrap-50 brand tape or equal. Flanged joints shall be given two coats of Koppers Company No. 300M Catalyzed Coal Tar Epoxy or equal. Flanged joints will not be allowed underground. Under no circumstances shall any backfilling operations begin until these pipe protection operations have been completed.

E. Joints in polyethylene pipe shall be made by any acceptable fusion method in strick accordance with manufacturer’s recommendation.

F. All polyethylene pipe shall be installed with caution tape and a minimum of twelve (12) inches above the pipe and a tracer wire at a minimum of 18 inches above the pipe.

G. All piping shall be run in the most direct manner with all equipment connections having the required cocks, dirt legs and cutoffs.

2.08 CATHODIC PROTECTION

A. A complete cathodic protection system shall be provided for all natural gas piping. The entire new gas piping system shall be “jeeped” prior to backfill to check all locations and correct all holidays or gaps in the coating system. Cathodic insulator fitting at entry to building.

2.09 ROOF DRAIN PIPING

A. All materials shall be service weight cast iron, schedule 40 black steel type “K” copper or schedule 40 PVC. All cast iron piping shall be coated wit asphaltum or coal tar pitch.

B. Joints in cast iron hub and spigot piping shall be Ty-seal or equal with neoprene gasket. Joints in no-hub cast iron and steel piping shall be Anaco Husky 4000 or Tyler Wide-Body made of neoprene gasket with stainless steel shield and clam-s. Joints in copper piping shall be wrought copper sweat.

C. All piping installation shall be run in the most direct manner. Horizontal pipes shall have a grade of one-quarter inch (1/4”) per foot, wherever possible, and not less in any case than one eight inch (1/8”) per foot.

D. Any plastic lines in return air ceiling space or plenum shall be enclosed in sheetrock or covered with 3M Firemaster blanket or UL910 standard system.

2.10 CLEANOUTS

A. Provide where shown on drawings and required by Code, all necessary cleanouts. Equipment by Wade, J.R. Smith and Josam shall be considered equal providing they meet the above recommendations.

B. Floor Cleanouts: Finished areas Zurn, ZN- l400-NH installed flush with round scoriated nickel bronze top.

C. Outdoor Cleanouts: Cleanouts in traffic areas shall be Zurn, ZN-1402-NH, with heavy duty grate and straight threaded tapered shoulder plug that seals against caulk lead seat.

D. Wall Cleanouts: Wall cleanouts shall be Zurn, Z-l468, with a stainless steel access cover.

E. Locations: Cleanouts shall be installed at the base of each soil stack, 90 degree turns and where shown on the drawings. The distance between cleanouts in horizontal runs of piping inside the building shall not exceed 50 feet and 100 feet outdoors. Install all cleanouts where shown on the drawings and where required by the Local Plumbing Code. Cleanouts shall be full size according to the size in which they are installed up to and including four inch (4").

2.11 HOT AND COLD WATER SYSTEM

A. Provide a complete system of inside water piping with proper connection to all plumbing fixtures or connections to equipment requiring water. The system shall be installed plumb with walls and pitched to one or more points of drain. All plumbing fixtures and mechanical equipment supplied with water shall have individual gate valves on hot and cold supply lines for servicing.

2.12 FLASHING

A. All plumbing vent pipes and miscellaneous pipes passing through the roof shall be flashed with #4 lead with the base extending eighteen inches (18") on all sides of pipe. Vent pipes shall have lead flashing extending around the vent pipe and over the top of the pipe and beaten down inside of the pipe at least one inch (1").

2.13 INSULATION

A. Insulation shall be as specified in Section 15180, Insulation for Mechanical Systems.

2.14 VALVES

A. Valves shall be as specified in Section 15000, Mechanical General Conditions.

2.15 FIXTURES AND EQUIPMENT

A. Fixtures as hereinafter specified and as indicated on the drawings shall be furnished and installed in a first-class manner with proper connections to the water and drainage systems. All fixtures shall be guaranteed by manufacturer to be free from flaws and defects of any sort in material and workmanship, and to operate perfectly when installed in accordance with the instructions which shall be furnished by the manufacturer. The manufacturer shall agree to replace free of charge, all or any part of the fixture which may show flaws or defect due to fault in manufacture, shipment or storage at any time after installation.

B. The Plumbing Contractor shall see that proper grounds are set to form a secure base for each fixture, an absolutely rigid setting will be required. Immediately after fixtures are set, they shall be covered with manila paper or plastic which shall not be removed until completion of the work. In addition, the Contractor shall furnish and install such guards and boxings as may be required, or as may be directed by the Architect to protect fixtures against damage from the normal operation of other trades. Where required, install chair carriers adequate to support wall-hung, flush tank water closet.

C. Water closet fixtures shall be elongated rim, and shall conform in quality to the general requirements of the current commercial standards for Sanitary Cast Iron Enameled Ware and Staple Vitreous China plumbing fixtures recommended by the US Department of Commerce. All restroom fixtures shall be of one manufacturer. The catalog numbers as hereinafter specified have been used to establish the type and degree as manufactured by Eljer, Kohler and American Standard are acceptable.

D. Flush valves of equal quality and type as manufactured by Delaney, Sloan or Zurn Aquaflush will be acceptable.

E. The Architect will be the sole judge as to whether the alternate fixtures and materials are equal to those specified in type and quality.

F. It shall be the Supplier's responsibility to submit any items in question for prior approval.

2.16 FIXTURE SCHEDULE

A. See Fixture Schedule on drawings.

PART 3 EXECUTION

3.01 PIPING IN GENERAL

A. All plumbing piping must be run as direct as possible, exposed or concealed inaccordance with the drawings. All water piping shall be carefully checked so at to avoid all noise due to vibration when water is turned off and on. All vertical pipe shall be rigidly supported or fastened. All horizontal steel or copper pipe shall be supported on not over ten (l0') foot centers for pipe two inches (2") and larger and not over six foot (6') centers for smaller pipe. All horizontal soil pipes to be supported on not over five foot (5') centers. Where indicated and on all water supplies to fixtures, provide capped air chambers not less than sixteen (16") long. All horizontal piping shall be graded so as to drain dry at fixtures when water is shut off.

3.02 DISINFECTING AND FLUSHING OF THE WATER MAIN

A. Disinfect the domestic water piping system. A chlorine solution of not less than 50 ppm shall be allowed to remain in the piping for six (6) hours. The piping system shall be flushed out before and after disinfecting the system. Entire procedure must be as approved by the State Health Department and Local authorities.

3.03 INSPECTIONS, TESTS AND ADJUSTMENTS:

A. All tests described below shall be witnessed by a representative of the Engineer's office. The Contractor shall inform the engineer of the time and place to witness the test.

B. All drain, soil, waste and vent pipes, including branch bends and joints, shall be tested by filling with water and placing a stand pipe to extend ten (l0) feet above the system and filling the system and the stand pipe with water. The Contractor may plug the system and hydrostatic test to eight (8) pounds pressure. Install gauge in connection with the test so that the actual test pressure can be observed. If there is a drop in pressure, the system shall be checked and the leaks repaired. Pipe systems may be tested in sections, provided that all portions to be concealed shall be subjected to the above test. If the stand pipe is used for these tests, it shall be not less than two (2) inches minimum in diameter. All lines shall be flushed after removing the test plugs.

C. Water Piping: All water piping shall be tested to one hundred (l00) pounds hydrostatic pressure. Place gauge on system or section of system and gauge shall show no drop in pressure for a period of thirty (30) minutes.

D. All gas piping systems shall be tested by subjecting the system to a pneumatic test pressure of 100 PSI. While the system is subjected to this air pressure all joints shall have a soapy water solution applied. Any leaks found shall be repaired and the system retested. The system shall then be subjected to the final pneumatic test pressure of 100 PSI and must hold the test pressure to twenty-four (24) hour.

E. Completion: Upon completion the entire system shall be tested under operating conditions. Water shall be turned into all supply lines. All fixtures shall be demonstrated to operate properly; valves and stops shall be adjusted, packed and repacked as may be required to eliminate leaks and produce proper flow; piping shall be adjusted to provide proper circulation and to prevent hammer, vibration and expansion. The Mechanical Contractor shall obtain and turn over the certificates of inspection and approval from State and Federal authorities having jurisdiction to the Architect.

3.04 SHOP DRAWINGS

A. Submit shop drawings on the following:

(1) Pipes and fittings,
(2) Gas piping,
(3) Cathodic protection,
(4) Cleanouts,
(5) Plumbing fixtures,
(6) Rough-in modifications, and
(7) Water heater.

END OF SECTION

SECTION 15800
HEATING, VENTILATING AND AIR CONDITIONING

PART 1 GENERAL

1.01 CONTENTS

This section of the specifications contains items applicable only to the Heating, Ventilating and Air conditioning system. Section 15000, Mechanical General Conditions and Section 15180, Insulation for Mechanical Systems, contains items which also apply. This section of the specifications supplements and modifies some of the statements herein as to apply specifically to the heating, ventilating and air conditioning system.

1.02 SCOPE

It is the intent of these specifications and drawings to furnish a heating, ventilating and air conditioning system inside and outside of the building, complete, fully adjusted and ready to use. All work and material must conform to all State and Local Codes in every respect.

PART 2 PRODUCTS

2.01 INSULATION

A. Insulation shall be as specified in Section 15180, Insulation for Mechanical Systems.

2.02 VALVES

A. Valves shall be as specified in Section 15000, Mechanical General Conditions.

2.03 SHEET METAL

A. All ductwork shall be fabricated and installed so that no undue vibration or noise results. All joints shall be airtight with additional caulking provided if necessary. Ducts shall be constructed of the best grade galvanized mild steel sheets with joints and reinforcing in accordance with the recommended construction as listed in the current edition of HVAC Metal Duct Construction Standards - SMACNA. Hang ducts with straps attached to bottom of ducts spaced in accordance with SMACNA Standards. Curved elbows, if used, shall have a center line radius equal to 1-1/2 times the duct width. Square elbows shall have turning vanes equal to HEP Aerodyne Co. ducturns. Job fabricated vanes will not be accepted without prior approval.

B. Provide all necessary dampers as required for proper adjustment and control of air distribution. Provide volume extractors similar to Aerodyne HEP extractors set at 20 degrees at all branches in ductwork where other means of control are not indicated or used, and in ductwork behind sidewall supply registers. All amper rods shall be marked to indicate the relative position of the damper lade with respect to rod.

C. Provide one inch (1") angle collars for all exposed ducts passing through walls, ceiling or floors. Anchor collars in position after installation is complete.

D. Provide flexible connection at inlet and discharge connections of fans and air handling equipment to prevent mechanical noises from being transmitted to connecting ductwork. Use flexible connection similar and equal to "Ventfab".

E. Install hinged doors on ductwork and housing to provide access to all parts of every automatic damper, fire damper and all other items requiring maintenance or inspection. Access doors shall be 18" X 12" if permitted by duct size, and if not, shall be as large as possible. All access panels shall have sponge rubber gaskets cemented in place with cam lock closures.

2.04 FIBERGLASS DUCTBOARD

A. Fiberglass ductboard shall not be used on this project.

2.05 FLEXIBLE DUCT

A. Flexible duct connectors shall be constructed of galvanized spring-steel-wire helix with fiberglass mesh coated with neoprene; nominal one inch (1") thick fiberglass insulation and vinyl vapor barrier, suitable to two inch (2") water gauge. Entire duct assembly shall be listed to UL label and shall be Thermoid, Portoduct Type 1 or equal. Maximum length of each run shall be eight (5') feet and supported without sagging. Flex duct shall be allowed only where indicated on the drawings.

2.06 VIBRATION

A. Ductwork shall be isolated from rotating or reciprocating equipment to which it is attached by means of a flexible connection. See sheet metal specification elsewhere herein for exact requirements. Equipment base isolators shall be provided where detailed on the drawings for equipment on floors, pads or bases.

2.07 GRILLES, REGISTERS, DIFFUSERS

A. Furnish and install grilles, registers, diffusers and accessories of size and type as indicated on drawings. All to be as manufactured by Nailor, Metal-Aire, Carnes, Air Guide, Enviro-Air or approved equal. See the schedule on the drawings for type and model.

2.08 EXHAUST FANS

A. Furnish and install roof-mounted exhausters as scheduled on the drawings. Exhaust fans shall be all aluminum construction, belt-driven as indicated with birdscreen and backdraft dampers unless otherwise noted. Furnish an aluminum prefabricated curb, compatible with the exhauster where indicated. All exhaust fans shall be Acme, Cook, Jenn-Fan, Greenheck, or approved equal. See control sequence for interlocks of fans with other equipment.

2.09 FIRE DAMPERS

A. Fire dampers shall be Ruskin type IBD2 “B” or low profile blade or approved equal. Furnish and install, at locations shown on the plans, fire dampers instructed and tested in accordance with UL Safety Standard 555. Each fire damper shall have a 1-1/2 hour fire protection rating, 165 degree F. Fusible link, and shall include a UL label in accordance with established UL labeling procedures. Damper Manufacturer’s literature submitted for approval, prior to installation shall include comprehensive performance data developed from testing in accordance with AMCA Standard 500 and shall illustrate pressure drops for all sizes for dampers required at all anticipated air flow rates. Fire damper shall be equipped for vertical or horizontal installation as required by the location shown. Fire dampers shall be installed in wall and floor opening utilizing steel sleeves, angles, other materials, and practices required to provide an installation equivalent to that utilized by the Manufacturer when dampers are tested with UL labeling procedures. Installation shall be in accordance with the Damper Manufacturers instructions. All fire damper

shall be approved as stated in SMACNA and the current ASHRAE Guide.

2.10 AIR CONDITIONING UNITS

A. Furnish and install packaged electric cooling, gas-fired heating units designed to function as a year-round air conditioning system. Units shall be completely assembled. and tested complete with refrigerant charge and ready to operate. Air conditioning units shall be Carrier, Trane, McQuay, or York, only.

B. Unit Capacity: Unit cooling and heating capacities shall be as scheduled.

C. Unit Compressor: Unit compressor shall be welded, fully hermetic with crankcase heater and suitable vibration isolators. The standard unit shall be capable of operating to 45 degrees F. Outside Ambient Temperature at published CFMs on cooling cycle. Compressors shall have a 5-year warranty. Compressor shall be equipped with factory installed crankcase heater.

D. Coils: Coils shall be of nonferrous construction with aluminum fins mechanically bonded to seamless copper tubes with all joints brazed.

E. Fans and Motors: Indoor air fan shall be forward curved centrifugal. Indoor fan motor shall have permanently lubricated bearings. Outdoor fan shall be of the propeller type, with direct-driven, totally enclosed, permanently lubricated motor. Fans shall discharge upward.

F. Unit Cabinet: Unit cabinet shall be constructed of galvanized steel, bonderized and coated with a baked enamel finish. Cabinet interior shall be insulated with 1/2 inch thick neoprene-coated fiberglass. Cabinet panels shall be easily removable for service to all operating components. A condensate drain for the indoor coil shall be provided.Controls: The cooling service shall be protected with low-pressure switch, loss-of-charge protection, indoor coil freezestats and current and temperature sensitive overload devices.

E. Each of these devices shall be wired through the circuit to prevent compressor restart until reset at the thermostat. The standard room thermostat shall contain an indicting light designed to illuminate if any safety controls trip out the compressor through the lockout circuit.

F. Unit electrical connection: Unit shall have single-point power connection to a terminal block. Cabinet shall contain suitable openings for routing of all utility connections.

G. Heat exchangers shall be corrosion resistant steel. Combustion shall be forced draft with spark ignition.

H. Provide a programmable thermostat and hail guard.

2.11 STAND ALONE AIR CONDITIONERS (ductless mini-splits)

A. Furnish and install wall mounted air handler unit and outdoor condensing unit suitable for roof installation as scheduled on the drawings. All units to have ARI certified performance listing. Units shall be capable of connection to Owner’s energy management and control system, provide with failure alarm.

B. Air handlers shall have molded resin chassis, heavy gauge zinc plated steel cabinet, anodized aluminum discharge grille, and integral condensate pan. Air stream surfaces to be insulated with 1/4”(6 mm.) of fiberglass. Fans and motor to be directly mounted. Motor to have overload protection. Units to have accessible permanent washable aluminum filter. Coils are to be

seamless copper tubing with aluminum fins factory tested to 460 psig. Units shall be equipped with capillary expansion tubes and refrigerant check valve. Controls installed at the factory or provided shall include relays and connections for outside unit and power supply. Front mounted thermostat and function switches on floor consoles and remote wall mounted on concealed unit. Provide condensate pump on all units. Ceiling mounted unit to be installed using all thread rod and vibration isolators

C. Outdoor condensing unit cabinet to be fabricated of galvanneal steel w/ corrosion inhibiting coating. Provide louvered hail guard. Compressors are to be hermetically sealed rotary or Inertia reciprocating type. Motors are to have overload protection. Coils to be seamless copper tubing with aluminum fins. Controls installed at the factory shall include compressor and fan motor contactor, capacitors, loss of charge switches, low voltage transformers, low voltage terminals for interconnection with evaporators, high pressure control on 18,000 Btu/h sizes, power supply terminal block, compressor start assist, and suction line accumulators. Provide units with extended run option.

2.12 MAKE UP AIR UNIT

A. Make-up air units shall be furnished per schedule and shall be fueled by natural gas. Equipment shall consist of a furnace section, a blower section and an evaporative section and shall be tested as a complete package prior to shipment. Acceptable manufacturers are CAPTIVE AIRE, Modine, Reznor, or approved equal.

B. Cabinet parts shall be constructed of minimum 20 gauge, G90U galvanized steel and finished with a hard gloss enamel. The height of the unit shall not exceed 39 inches.

C. Blower wheels shall be statically and dynamically balanced, forward curved double width, double inlet, with ball bearings, and V-belt driven through grooved cast iron pulleys. Driver sheaves to be variable pitched. Blower motor to be drip-proof, overload protected and mounted on adjustable base with volts and phase as scheduled. The entire fan and motor assembly shall be mounted on vibration isolators to prevent noise transmission. Motors shall be permanently lubricated, heavy duty, ball bearing type, carefully matched to the fan load and furnished at the specified voltage, phase and enclosure. The fan shaft shall be ground and polished steel mounted in heavy duty, sealed ball bearings. Bearings shall be selected for a minimum average (L50) life in excess of 200,000 hours at maximum cataloged operating speeds. Pulleys shall be of the fully machined, cast iron type, keyed and securely attached to the wheel and motor shafts. Motor sheaves shall be adjustable for final system balancing. Drives shall be sized for a minimum of 150% of driven horsepower.

D. High efficiency evaporative section shall have pleated evaporative cooling media and one side inlet air. Evaporative units to have six nozzles for water distribution and electronic system to regulate water distribution. Bottom pan of unit to be constructed of stainless steel.

E. Heat exchanger shall be constructed of stainless steel and shall be warranted for five years. Ribbon burners are aluminized steel with stainless steel inserts. Burners, manifolds, orifices, flame sensor and ignitor to be easily removable as an assembly with access on the side of the unit.

F. Gas and electric components shall be for each combustion chamber main combination control with electronic modulating gas valve, main and redundant solenoid valves. Other controls to include two stage duct thermostat, high limit, fan safety switch, hot surface pilotless ignition system, 24-volt control transformer, power vent with proving switch. Provide wall mountable remote control panel. The prewired control center shall include, but not be limited to, an integral master disconnect switch with fuse blocks for main power connection, magnetic motor starters

with thermal overloads and manual reset, fused 115 volt control transformer, and distribution terminal control strip for control wiring connection. All electrical components shall be UL listed, approved or classified where applicable and wired in compliance with the National Electrical Code Wiring shall be complete, requiring only one-point field connection for power service.

2.13 EXHAUST FAN-KITCHEN HOOD

A. Roof exhaust fans shall be of the best drive, upblast, vertical discharge type. Housings shall be constructed of heavy gauge aluminum. The windband shall have a rolled bead and additional structural members for added strength. The fan wheel shall be of the backward inclined, centrifugal type, constructed of aluminum and statically and dynamically balanced for smooth, vibration free operation.

B. Construction shall include a built in grease drain. Motors and drives shall be isolated from the airstream. Motors shall be permanently lubricated, heavy duty, ball bearing type, carefully matched to the fan load and furnished at the specified voltage, phase and enclosure. Motors shall be cooled by air drawn from outside the exhaust airstream. The fan shaft shall be ground and polished steel mounted on heavy duty ball bearings. Bearings shall be selected for a minimum average (L50) life in excess of 200.000 hours at maximum cataloged operating speeds. Pulleys shall be of the fully machined cat iron type, keyed and securely attached to the wheel and motor shafts. Motor sheaves shall be adjustable for final system balancing. Drives shall be sized for a minimum of 150% of driven horsepower. The entire fan and motor assembly shall be mounted on vibration isolators to prevent noise transmission.

C. The roof exhaust fans shall bear the AMCA certified ratings seals for air and sound performance.

D. Kitchen exhaust fan shall be as scheduled or approved equal.

2.14 KITCHEN HOODS

A. Kitchen hood shall be as manufactured by Captiveaire, Greenheck, Aerolator or approved equal. The hood shall be provided with insulated supply air plenum, distribution plate at the inlet to the supply plenum to provide for even distribution for the full length of the hood. The hood shall be constructed of 18 gauge 304 stainless steel. The hood shall be constructed in accordance with and labeled with the following: National Fire Protection Association Standard 96 (NFPA-96), National Sanitation Foundation (NSF) and the Underwriters Laboratory (UL). The hood shall include a UL approved fire damper in the supply connection to the duct system. The hood shall include UL classified aluminum, non-clogging, baffle type filters and UL listed recessed fluorescent light fixture. The supply air shall be introduced to the hood through an air diffuser along the exterior length of the hood. The hood shall be wall type and shall be as scheduled on the drawings.

B. A fire suppression system shall be provided on the wet type similar to Ansul type 102 and shall include chrome plated sleeved drops to all fixtures, interlocked with electrical and gas controls, tests and operating charge to the system.

2.15 SPIRAL AND OVAL DUCT

A. Spiral wound round and oval duct shall be made of galvanized steel. Spiral wound duct shall be manufactured in accordance with the latest editions of SMACNA, ASHRAE and SPIDA Standards. Use only premanufactured fittings. Duct shall be double wall, internal to be perforated with 1 ½ inches of insulation. Spiral duct shall be as manufactured by Spiral pipe of Texas, United McGill, Cisneros, Lewis and Lambert, or approved equal.

PART 3 EXECUTION

3.01 WORKMANSHIP

A. All work shall be first-class in every respect and shall be done by mechanics skilled in the trade involved. Careless and/or sloppy work shall be resolved and replaced properly at the Contractor's expense.

3.02 SCHEDULING OF WORK

A. The Contractor shall be required to confer with the Architect, General Contractor and Owner to determine a schedule of times at which the various items of work are to be accomplished.

3.03 CONSULTATION WITH OTHER CONTRACTORS

A. Before commencing the work, the Contractor shall consult with the General Contractor and other Subcontractors and arrive at a thorough understanding as to the location of all equipment, ducts, etc., so that there will be no interference with other work. The time of installation of sleeves, etc. shall be determined by the Contractor. In the event he should fail to have material on the job and such provisions are not made previously with the Gen. Contractor, necessary arrangements shall be made at the expense of the Contractor.

3.04 CLEANING, TESTING AND ADJUSTING

A. The Contractor is cautioned to instruct his mechanics to keep all equipment, ducts an materials free of foreign materials during installation. Any malfunction of the several system resulting from sand, rocks and other foreign material in the systems shall be corrected at the Contractor's expense. Upon completion of the work, the Contractor shall thoroughly cleanout the several duct system. The Contractor shall take precaution during the cleaning operation to protect his work and the work of all other traces and should any damage be done, he shall remedy or repair it to the complete satisfaction of all concerned, and at no additional cost to the Owner.

B. Functional Tests: Make specific tests of all equipment and materials and portions of this installation as required herein to prove their condition and performance and any tests as required by any authority having jurisdiction over this type of installation. The Contractor shall adjust all equipment, air quantities, controls and devices, so that all components of the various systems are left in proper working order. As part of this test the entire piping system shall be pressurized to 100 PSI for four (4) hours. These tests must be witnessed by a representative from the Engineer's office. All hydronic piping to be flushed out and chemical added.

3.05 START UP

A. It is the responsibility of the Mechanical Contractor to arrange a minimum two (2) day start-up program. A factory representative for the Owner, the Engineer, and the Mechanical Contractor shall be on the site. The purpose of this start-up is to run the system thoroughly and determine that it is functioning satisfactorily. If for some reason the start-up cannot be completed the program will be rescheduled and the system will be run to the satisfaction of the Engineer at no additional cost to the Owner. The entire cost of the start-up program shall be included in the contract.

3.06 SHOP DRAWINGS

A. Submit shop drawings on the following:

(1) Grilles, Registers, Diffusers,
(2) Exhaust fans,
(3) Fire Dampers,
(4) Air Conditioning Units, and
(5) Mini split systems.

END OF SECTION

SECTION 15900
TEST AND BALANCE

PART 1 GENERAL

1.01 SCOPE

A. This section covers the testing and balancing of environmental system including but not limited to: air distribution systems and the equipment and apparatus connected thereto.

B. The work required herein shall consist of setting volume (flow) and speed adjusting facilities provided or specified for the systems, recording data, making tests and preparing reports, all as hereinafter specified.

1.02 GENERAL REQUIREMENTS

A. The work described in this section shall be performed by a firm(s) certified by the National Environmental Balancing Bureau. If the Installing Contractor is not certified by the NEBB, he shall submit appropriate data indicating experience and qualifications.

PART 2 PROCEDURE

2.01 PROCEDURES

A. The environmental systems including all equipment, apparatus and distribution system shall be tested and balanced in accordance with the NEBB "Procedural Standards for Testing Adjusting and Balancing of Environmental Systems" published by the NEBB, Current Edition.

B. All work performed under this section shall be under the direction of the supervisor who is designated and qualified under the certification requirements of NEBB.

C. All instruments used for measurement shall be accurate, and calibration histories for each instrument shall be available for examination. Calibration and maintenance of all instruments shall be in accordance with the requirements of NEBB.

D. Accuracy of measurement shall be in accordance with NEBB standards.

PART 3 EXECUTION

3.01 REPORTS

A. Four copies of the final reports shall be submitted on applicable Reporting Forms for review.

B. Each individual final Reporting Form submitted must bear the signature of the person who recorded the data and the signature of the TAB supervisor of the performing firm.

C. Identification of all types of instruments used and their last dates of calibration will be submitted with the final report.

3.02 GUARANTEE

A. The NEBB certified firm guarantees that all testing and balancing work will be performed in accordance with NEBB standards and procedures and shall provide evidence of their certification for the Engineer or designated Owner's representative.

END OF SECTION

SECTION 15985
BULDING AUTOMATION SYSTEM

PART1-GENERAL

1. OVERVIEW

This document contains the specification and input/output summaries for a Building Automation System (BAS) for:

City of El Paso

Northgate Transfer Center

El Paso, TX

The system shall provide the Direct Digital Control (DDC), Energy Management and Building Automation System (BAS) for the air conditioning, heating and ventilating systems and shall interface with other microprocessor based building subsystems as shown on the drawings and as specified.

1.1 APPROVED BIDDERS:

A. Automated Logic Corporation

B. Johnson Controls Inc.

C. Invensys

1.2 INSTRUCTIONS TO BIDDERS:

The City of El Paso presently utilizes an energy management control systems (EMCS) manufactured by Automated Logic Corporation, Johnson Controls, Invensys, and Trane and has an energy management staff that has been formally trained in the use of these systems. The energy management staff also has long experience with this system and has the tools required to perform onsite control module service at all facilities that have the Automated Logic Corporation System. The successful EMCS bidder shall be required to:

A. Provide the required hardware and cables that will allow for the portable computers to be connected to the digital control modules to be installed at this facility. This includes the cable required to connect to gateways, routers, building controllers, and digital control modules.

Note: Special attention should be given to the following paragraphs 1.2.C, D, E, F, G, H and I and will be provided by <u>all</u> bidders.

C. Provide the specified factory training indicated at paragraph 1.5.D.2.

Special attention should also be given to the following:

D. Warranty requirements for control valves and digital control modules should be considered at paragraph 1.4.D.

E. As-built requirements noted at paragraph 1.5.A.4.

F. During the warranty period, CITY OF EL PASO Energy Management personnel shall be allowed to use the software for tasks considered to be required for normal daily operation. This shall in no way void warranty. Normal daily tasks include scheduling, changing set points, initiating overrides, and making other parameter changes that should be expected during the normal operation of a facility.

G. Each HVAC unitary equipment shall have a dedicated unitary (application specific) controller.

H. Spare I/O point capacity: Each mechanical room controller, air handling unit controller, chilled water plant controller, and heating water plant controller shall provide 2 spare AO, AI, DO, and DI points for future use.

I. Pneumatic controls will not be allowed for this project.

1.3 SCOPE OF WORK

A. Contractor's Responsibilities

The Contractor shall furnish and install all necessary software and hardware, wiring, and computing equipment in compliance with this specification. Any variances from this specification or related documentation shall be submitted in writing one week prior to time of bid for approval by consultant and owner.

B. System Requirements

1. Standard Material/Products.

All material and equipment used shall be standard components, regularly manufactured and available, and not custom designed especially for this project

2. Modular Design.

The system architecture shall be fully modular permitting expansion of application software, system peripherals, and field hardware.

3. Performance.

The system, upon completion of the installation and prior to acceptance of the project, shall perform all operating functions as detailed in this specification.

C. Equipment

1. System Hardware

The Contractor shall provide the following:

a. Gateways, routers, modems and control modules as specified.

b. All sensing devices, relays, switches, indicating devices, and transducers required to perform the functions as listed in I/O Summary Tables.

c. All monitoring and control wiring, and conduit.

2. System Software

The Controls Contractor shall provide all software identified in Part 2 of this specification, including the fully configured database, graphics, reports,

alarm/events. The Graphical User Interface (GUI) shall be complete as specified herein.

D. Input/Output Point Summary Schedule

The system as specified shall monitor, control, and calculate all of the points and perform all the functions as listed in I/O Point Summary Schedule as detailed at the end of this specification.

E. Codes and Regulations

1. Standards Authority.

All electrical equipment and material, and its installation, shall conform to the current requirements of the following authorities:

a. Occupational Safety and Health Act (OSHA)

b. National Electric Code (NEC)

c. National Fire Code

d. International Mechanical Code

e. International Building Code

f. International Plumbing Code

2. Product Applicable Standards.

All distributed, standalone and unitary controllers supplied shall be in compliance with the following listings and standards:

a. UL916 for Open Energy Management (for U.S. and Canada)

b. FCC Part 15, Sub-Part B, Class A

c. CE Electro Magnetic Compatibility

3. Manufacturer's Quality System.

The control system manufacturer shall be ISO9001 listed for design and manufacture of environmental control systems for precise control and comfort, indoor air quality, HVAC plant operation, energy savings and preventative maintenance. ISO Certification shall be by a registrar that is accredited by an internationally recognized organization such as BSI (British Standards Institute). Copy of ISO9001 certificate shall be submitted with bid.

4. Conflict of Codes.

Where two or more codes conflict, the most restrictive shall apply. Nothing in this specification or related documentation shall be construed to permit work not conforming to applicable code.

1.4 GENERAL CONDITIONS

A. Changes in Scope of Work

Any changes in the scope of work must be authorized by a written Change Order, and issued by CITY OF EL PASO, in accordance with Contract conditions.

B. Correction of Work

1. Contractor's Responsibility.

The Contractor shall promptly correct all work CITY OF EL PASO finds defective or failing to conform to the Contract Documents. The Contractor shall bear all cost of correcting such work.

2. During Warranty.

If, within the warranty period required by the Contract Documents, any of the work is found to be defective or not in accordance with the Contract Documents, the Contractor shall correct it promptly after receipt of a written notice from CITY OF EL PASO to do so. CITY OF EL PASO shall give notice promptly after discovery of the condition.

C. Coordination of Work During Construction

1. The Contractor shall coordinate any necessary changes in work scheduling with CITY OF EL PASO to minimize disruption.

a. The Contractor shall protect the installed works by other trades.

b. The Contractor shall coordinate with other trades.

c. The Contractor shall repair any damage caused by his work to building(s) and equipment at no additional cost to the owner.

D. Warranty

The Contractor shall warrant, from the date of final acceptance by CITY OF EL PASO, that all systems, subsystems, component parts, and software are fully free from defective design, materials, and workmanship for a period of two years. The additional warranties shall apply:

1. Three year extended warranty on all routers, gateways, building controllers and all digital control modules. Extended warranty shall mean that following the two year warranty described above, the routers, gateways, building controllers, and all digital control modules shall be warranted for an additional three years. This is a material warranty only. Replacement, repair or troubleshooting labor is not included.

2. Three year extended warranty on all control valves. Extended warranty shall mean that following the two year warranty described above, the control valves with actuators shall be warranted for an additional three years. This is a material warranty only. Replacement, repair or troubleshooting labor is not included.

3. Phone technical support shall be provided free of charge for two years after the project completion date.

4. The Contractor shall receive calls during the warranty period for all problems or questions experienced in the operation of the installed equipment and shall take steps to correct any deficiencies that may exist. The response time to any

problems shall be on one (1) hour by modem and/or six (6) hours on-site maximum, at all times.

5. After the two year warranty period has expired, District employees may replace valves and control components as they deem necessary, even if using a different brand or type without affecting the warranty on the rest of the system.

1.5 SUBMITTALS, DOCUMENTATION, ACCEPTANCE AND TRAINING

A. Submittals

1. Shop Drawings.

Seven copies of shop drawings shall be submitted and shall consist of a complete list of equipment, materials, cut-sheets, and installation instructions. Drawings shall contain proposed layout, complete wiring, routing, schematic diagrams, tag number of devices, software descriptions, calculations, installation details, and any other details required to demonstrate that the system will function properly. Submittals shall be reviewed by both consultant and owner prior to approval.

a. Submittal data (i.e., technical data cut sheets) shall be legible, typewritten product data sheets or CADD prepared drawings, ANSI size A or fan folded ANSI size B, indexed, and tabbed in a vinyl report cover or hard bound three-ring binder. All data shall show the specific model and options selected and shall be keyed to the drawings.

b. The drawings shall show the relationship between all controlled/monitored equipment and the BAS by process flow schematic diagrams showing the mechanical and electrical equipment associated with the control system, the fluid flow in the system (i.e., ducted air or piped liquids, sensor locations, signal transducers, valves, damper and operators, and electronic control lines). These diagrams shall be grouped by system (i.e., chilled water plant or second floor air handling system).

c. Control drawings with detailed piping and wiring diagrams; controlled/monitored equipment layout; and connections to all enclosures, panels, and controllers including bill of material and description of operation for all systems. Drawings shall include: sequence of operation, parts list (bill of material), panel layouts showing point names, call control device locations, system one-line, and wiring details.

d. The sequence of operation shall be for all controlled and monitored points, and customized operator interface. The sequence of operation required of the Contractor for the submittals need not be a duplicate of the sequence of operation as described in this specification.

e. Panel layouts for DDC panels and dedicated controllers shall be a diagram of each uniquely wired panel/controller including point name, point type, wiring terminals, and field device type and location.

f. Communications cable schematic showing panel and controller locations, and all data and systems conductors.

g. Technical data sheets of system components and devices shall include all data needed to show adherence to this specification.

h. The Owner/Engineer will make corrections, if any are required, directly on one set of shop drawings and attach corrections to other submittal data. The Contractor

shall incorporate the Owner's corrections onto the original drawings and resubmit the required quantity of prints. The Contractor shall resubmit corrected or additional printed data. This procedure shall be repeated until all corrections are made to the satisfaction of the Owner and Consulting Engineer, and the submittals are returned with the stamp "APPROVED" or "APPROVED AS NOTED."

i. Explicitly list on a separate submittal page entitled "SUBMITTAL DEVIATIONS," any deviations, discrepancies, or conflicts between submittals and the contract documents. Contractor further agrees that any deviations, discrepancies, or conflicts not listed therein and accepted shall be changed or removed to meet the contract documents at no cost to the Owner.

j. The contractor shall provide initial documentation outlining the warranty items as described with-in this specification.

2. SOFTWARE SUBMITTALS:

The software submittals described herein shall be submitted and approved by the Owner prior to the start-up of the system. They shall be submitted no later than two weeks before system start-up or as agreed-upon in the approved project schedule.

a. The software documented by the submittals shall represent all Owner requirements and be developed as a joint effort with the Owner. It is the Contractor's responsibility to initiate all conversations and schedule with the Owner any meetings necessary to gather these requirements. Specific Owner requirements that need to be addressed by the Contractor during the software submittal phase are referred to in the remainder of the specifications with the phrase "during the software submittal phase."

b. Supply the Owner with two (2) completely documented copies of all BAS software source code. Also, supply all user's programming and engineering manuals required to interpret the software, that are not already in the possession of the Owner. "Source code" shall include, though is not limited to, the following:

i. Point data base.

ii. All custom control programs written in the BAS control language.

iii. All parameters required for proper operation of BAS control and utility firmware such as start/stop routines, etc.

iv. Printouts or plotted copies of the interactive system graphics.

v. Develop and format software documentation for ease of interpretation by the Owner, without assistance from the Contractor. English language descriptions shall be either integrated with or attached to the source code. Document the following:

1. The intended actions, decisions, and calculations of each line or logical group of lines in the custom control program(s). Comment lines shall be used and loaded into the panel as part of the software code. Sequences of operation are not acceptable for use in this documentation requirement.

2. Complete descriptions of and theories explaining all software and firmware algorithms. The algorithms to be described include, but are

not limited to, PID, optimum start/stop, demand limiting, and chiller and boiler optimization, morning warm-up.

3. Provide a table of contents to the documentation which locates the sections of the documentation and describes which programs or program sections are for each piece of controlled/monitored equipment.

4. Provide data flow diagrams or matrices that show, for each uniquely controlled output, the flow of data within the software. The diagrams shall include blocks that represent inputs, programs and databases that are linked by arrows showing the data flows. Blocks shall be tagged by names that key to the remainder of the software documentation. Matrices shall represent in a tabular manner the same information as that required for the diagrams. (Data flow diagrams are an industry accepted software engineering/systems analysis design/documentation tool).

5. The intent of supplying the above software submittals is to determine compliance with specification requirements and the needs of the application.

3. Drawing Approval.

Shop drawings shall be approved before any equipment is installed. All drawings prepared for the project shall be developed using the AutoCAD version 14.0 or a CADD package capable of producing complete AutoCAD DXF format files.

The suggested format for different groups of submittal information are as follows:

a. Control drawings, building plans, schematics, and system configurations shall be CADD prepared drawings, ANSI size D, bound, and indexed. The index shall be on the first drawing and shall be by drawing number and title. Drawing titles shall be descriptive (e.g., not a CAD file name). Each drawing's number shall be composed as follows: "Building" – "Project Number" – "Location" – "Drawing Sequence Number."

b. Drawings that cannot represent the total information on an individual D size drawing (i.e., a building plan) shall be noted with appropriate match lines, cross references, and key plans.

4. As Built Drawings.

All drawings shall be reviewed after the final system checkout and updated or corrected to provide 'as-built' drawings to show exact installation. All shop drawings will be acknowledged in writing by CITY OF EL PASO before installation is started and again after the final checkout of the system. The system will not be considered complete until the 'as-built' drawings have received their final approval. The Contractor shall deliver 1 set of 'as-built' drawings to the consultant. The consultant will then provide 1 reproducible Mylar set and 1 set in electronic format to the owner.

a. As built drawings must include floor plans that indicate mechanical and electrical equipment, network cable routing and control panel locations, point lists, electrical power wiring used by controls, and electrical panel location.

b. As-built point lists must be laminated and glued to the inside of all module enclosures.

B. Documentation

Operating and Maintenance (O&M) manuals for the system shall be made available electronically and include the following categories: Workstation User's Manual, Project Engineering Handbook, and Software Documentation.

1. BAS User's Manual

BAS user's manual shall contain as a minimum:

a. System overview

b. Networking concepts

c. Creating, modifying or deleting schedules

d. Uploading and downloading software to the field hardware

e. Creating historical trends, collecting trend data and generating trend graphs

f. Enabling and assigning alarms and messages to reporting actions/groups

g. Report generation and 'third party software'

h. Backing up software and data files

2. Project Engineering Manual

Project engineering manual shall contain as a minimum:

a. System architecture overview and networking configuration

b. Hardware cut-sheets and product descriptions

c. The Contractor shall deliver four sets of 'as-built' drawings. All drawings shall be reviewed after the final system checkout and updated to provide 'as-built' drawings. The system will not be considered complete until the 'as-built' drawings have received their final approval.

d. Installation, mounting and connection details for all field hardware and accessories

e. Commissioning, setup and backup procedures for all control modules/accessories, BAS server software, and database.

f. Listing of basic terminology, alarms/messages, error messages and frequently used commands or shortcuts.

g. Describe all regular maintenance that will need to be performed on the BAS Hardware.

h. List replacement parts with part numbers.

3. BAS Software Documentation

Shall contain the following minimum requirements:

a. The Contractor shall provide all software programs, detailing their application to specific HVAC equipment and electrical/mechanical subsystems, together with a glossary or icon symbol library detailing the function of each graphical icon or programming line. Revisions made as a result of the submittal process, during the installation, start-up or acceptance portion of the project, shall be accurately reflected in the "as-builts".

b. Graphical representation of the mechanical equipment hierarchy for the project including all equipment controlled by the BAS. For example: a VAV terminal box may be the source for increased cooling demand and require the primary VAV AHU to operate which, in turn, requires the chillers to operate.

c. Detailed listing of all alarm and event messages programmed for designated mechanical/electrical equipment and required operator action.

d. All software, databases, graphic files, CADD drawings, and symbol libraries generated for operation of the system shall be included as a part of the system documentation. This information shall be submitted both in hard copy bound format and media format (i.e., floppy disk or CD).

e. One copy only of all original issue documentation and software diskettes for all third party software furnished and installed as a part of the system or required for the operation of the system including text editors, control language program and compiler, database managers, graphics and CADD packages, preventative maintenance software, operating systems and communications software.

f. One copy only of supporting software for all third party hardware furnished and installed as a part of the system or required for the operation of the system.

C. Acceptance Test

1. Acceptance Testing.

Upon completion of the installation, the Contractor shall start up the system and perform all necessary calibration, testing, and debugging operations. This includes any operating system software (i.e., WIN ’98) and necessary batch files, the operator interface data base and any third party software required for successful operation of the operator interface. The Contractor in the presence of the Owner’s representative shall perform an acceptance test. The acceptance test shall not exceed eight hours

2. Notice of Completion.

When the system performance is deemed satisfactory, the system parts will be accepted for beneficial use and placed under warranty. At this time, CITY OF EL PASO shall issue a “notice of completion” and the warranty period shall start.

D. System Training

1. Onsite Training:

Controls Contractor shall provide onsite training for 40 hours to at least four CITY OF EL PASO personnel, three of which will be from the Energy Management Department, in the operation, maintenance, and programming of the system. Training sessions shall be no less than half day (4 hours) in length or full days (8 hours) in length. The training shall focus on general design, operation, and maintenance procedures of the products installed, though not necessarily the specific system designed, and shall cover:

a. Hardware configuration including PC boards, switches, communication and point wiring, and location and installation of all sensors and control devices.

b. Operation of person-machine interface including logging on/off, interrogating the system, producing reports, acknowledging alarms, overriding computer control, and changing firmware/software parameters.

c. Programming the BAS using the editor and the design of custom control software.

d. Overview of system configuration/architecture, equipment controlled/monitored, system device locations, sequence of operation, control software structure and documentation.

e. Hardware maintenance, calibration, troubleshooting, diagnostics, and repair instructions.

Controls contractor shall submit to the District, 15 days in advance for District approval, a written Agenda listing the subjects to be covered and the time frame for each subject. The first session (onsite training) shall be provided at the completion of the project. Additional sessions shall be provided after the factory training has been completed and at the request of the owner.

2. Factory Training:

Factory training shall be provided for at least three CITY OF EL PASO Energy Management personnel. CITY OF EL PASO designated personnel shall be sent to an authorized factory training center operated by personnel in the direct employ of the manufacturer of the software and hardware to be installed for this project. Each CITY OF EL PASO employee sent for factory training will be sent to the "Operator Training" *and* "Hardware Training" courses. CITY OF EL PASO reserves the right to select which courses and dates CITY OF EL PASO personnel attend. The Contractor shall include in their base bid the expense of sending a minimum of three CITY OF EL PASO personnel to the factory for authorized factory training on the proposed system and equipment. This expense is to include all costs (air travel, meals, individual hotel accommodations, car rental, factory charges, etc.) related to such training. These costs shall be paid for by the contractor and shall be included in their base bid and is to be listed as a unit price.

All travel arrangements must be submitted to the CITY OF EL PASO Energy Management Department for prior approval at least 60 days in advance. Contractor will submit, ten days prior to bid date, in writing, a list of all factory offered courses to include, but not limited to, an abstract of each course along with prerequisites for each course, locations and dates courses are offered.

PART 2 – BAS USER INTERFACE

2.1 SYSTEM OVERVIEW

The BAS contractor shall provide system software based on open standards technology. The BAS software shall communicate using ASHRAE's BACnet/IP or LonWorks Protocols.

The BAS software shall be installed on the owners operator workstation located in the Energy Managers office and on the three portable computers used by the energy management department. The workstation and portable computers presently utilize

software manufactured by Automated Logic Corporation and Trane. The control contractor shall install his software on these same computers and be completely responsible for achieving problem free operation. Any additional hardware and labor required to achieve problem free operation shall be the responsibility of this contractor.

The BAS software graphical user interface shall provide a completely interactive user interface and must offer the following features as a minimum:

- Trending
- Scheduling
- Downloading Memory to field devices
- Real time 'live' Graphic Programs
- Tree Navigation
- Parameter change of properties
- Setpoint Adjustments
- Alarm / Event information
- Configuration of operators
- Execution of global commands

A. Software Components

All software components of the BAS system software shall be installed and completed in accordance with the specification. BAS system components shall include:

1. Graphical User Interface

2. Database base configuration tools

3. System Configuration Utilities for future modifications to the system

4. Programming Tools

5. Direct Digital Control software

6. Application Software

B. Communication Protocol(s)

The native protocol for the BAS server software shall be BACnet or LonWorks.

C. Software Design/Programming Practices:

All software developed by the Contractor including custom operator interface software code and outputs (e.g., menus and system displays) shall be written in a uniformly consistent manner. All programs that perform similar duties shall show a consistency in design. The software developed under this contract shall be consistent with the software in all existing BAS equipment.

2.2 GRAPHICAL USER INTERFACE (GUI)

A. GUI Navigation

The GUI shall provide a comprehensive user interface and provide a complete and intuitive mouse/menu driven operator interface. The GUI shall (as a minimum)

provide a Navigation Pane for navigation, and a Action Pane for display of animated graphics, schedules, alarms/events, live graphic programs, active graphic setpoint controls, configuration menus for operator access, reports, and reporting actions for events.

1. Graphics:

Graphics shall include updated Regional map, aerial building/campus views, color building floor-plans, equipment drawings, active graphic, and setpoint controls. The data on each graphic page shall automatically refresh at a rate defined by the operator. The Regional map shall be updated using third party software to launch the user into existing and new systems seamlessly.

2. Properties:

Shall include graphic controls and text for the following: Locking or overriding objects, demand strategies, and any other valid data required for setup. Changes made to the properties pages shall require the operator to depress an 'accept/cancel' button.

3. Schedules:

Shall be used to create, modify/edit and view schedules based on the systems geographical hierarchy and in compliance with section 2.2.D.

4. Events:

Shall be used to view alarm event information geographically (using the navigation tree), acknowledge events, sort events by category, actions and verify reporting actions.

5. Trends:

Shall be used to display associated trend and historical data, modify colors, date range, axis and scaling

6. Logic - Live Graphic Programs:

Shall be used to display a 'live' graphic program of the control algorithm for the mechanical/electrical system selected in the navigation tree.

Other actions such as Print, Help, Command, and Logout shall be available via a drop-down window.

B. Color Graphics

The GUI shall make extensive use of color in the graphics to communicate information related to set points and comfort.

1. Display Size:

The GUI workstation software shall graphically display in 1024 by 768 pixels 24 bit True Color.

2. General Graphic:

General area maps shall show locations of controlled buildings in relation to local landmarks.

3. Color Floor Plans:

Floor plan graphics shall show heating and cooling zones throughout the buildings in a range of colors, which provide a visual display of temperature relative to their

respective setpoints (see section 2.2.C below). The colors shall be updated dynamically as a zone's actual comfort condition changes.

4. Control Panel Locations:

Floor plan graphics shall indicate the location of control panels housing gateways, routers, modems, differential pressure transmitters, and any additional hardware not located adjacent to the mechanical equipment it serves.

5. Mechanical Components:

Mechanical system graphics shall show the type of mechanical system components serving any zone through the use of a pictorial representation of components. Selected I/O points being controlled or monitored for each piece of equipment shall be displayed with the appropriate engineering units.

6. Minimum System Color Graphics:

Color graphics shall be selected and displayed via a web browser for the following:

a. Each piece of equipment monitored or controlled including each terminal unit

b. Each building

c. Each floor and zone controlled

C. Zone Setpoint Adjustments

Color floor plans shall utilize a contiguous band of colors, each corresponding to actual zone temperatures relative to the desired heating and cooling setpoints. The ideal temperature shall be shown as a green color band. Temperatures, slightly warmer than ideal, shall be shown in yellow, and even warmer temperature bands shall be shown in orange. Temperatures slightly cooler than ideal shall be light blue, and even cooler temperatures shall be shown as dark blue. All alarm colors shall be in red.

1. Active Zone Graphic Setpoint Controls:

Utilizing a mouse, it shall be possible to select occupied or unoccupied setpoints (corresponding to the floor plan colors) and drag the color slide bar(s) to increase or decrease heating and cooling setpoints. In addition to the slide bars, an operator may type the numeric value of the heating and cooling setpoints. The floor plan graphic shall then change colors on a zone-by-zone basis to reflect the actual temperature in each zone relative to the changed heating or cooling setpoint.

D. Hierarchical Schedules

Utilizing the GUI, an operator (with password access) shall be able to define a Normal, Holiday or Override schedule for an individual piece of equipment or room, or choose to apply a hierarchical schedule to the entire system, site or floor area. For example, Independence Day ‘Holiday’ for every level in the system would be created by clicking at the top of the geographic hierarchy defined in the Navigation Tree. No further operator intervention would be required and every control module in the system with would be automatically downloaded with the ‘Independence Day’ Holiday.

1. Schedules:

Schedules shall allow events to be scheduled based on:

a. Types of schedule shall be Normal, Holiday or Override

b. A specific date,

2. Schedule Groups:

In addition to hierarchical scheduling, operators shall be able to define functional Schedule Groups, comprised of an arbitrary group of areas/rooms/equipment scattered throughout the facility and site. For example, the operator shall be able to define an 'individual tenant' group – who may occupy different areas within a building or buildings. Schedules applied to the 'tenant group' shall automatically be downloaded to control modules affecting spaces occupied by the 'tenant group'

3. Intelligent Scheduling:

The control system shall be intelligent enough to automatically turn on any supporting equipment needed to control the environment in an occupied space. If the operator schedules an individual room in a VAV system for occupancy, for example, the control logic shall automatically turn on the VAV air handling unit, chiller, boiler, and/or any other equipment required to maintain the specified comfort and environmental conditions within the room.

4. Partial Day Exceptions:

Schedule events shall be able to accommodate a time range specified by the operator (ex: board meeting from 6 pm to 9 pm overrides Normal schedule for conference room).

5. Schedule Summary Graph:

The schedule summary graph shall clearly show Normal versus Holiday versus Override Schedules, and the net operating schedule that results from all contributing schedules.

Note: In case of priority conflict between schedules at the different geographic hierarchy, the schedule for the more detailed geographic level shall apply.

6. Schedule Distribution:

For reliability and performance, instead of maintaining a single schedule in a field device that writes over the network to notify other devices when a scheduled event occurs, field devices will only keep their part of the schedule locally. The BAS software shall determine which nodes a hierarchical schedule applies to and will create/modify the necessary schedule objects in each field device as necessary.

E. Events (& Alarms)

Events, alarms, and reporting actions shall have the following capabilities:

1. Event Templates:

Event template shall define different types of alarms and their associated properties. As a minimum, properties shall include a reference name, verbose description, severity of event, acknowledgement requirements, high/low limit and out of range information.

2. Event Time/Date Stamp:

All events shall be generated at the DDC control module level and comprise the Time/Date Stamp using the standalone control module time and date.

3. Event Configuration:

Operators shall be able to define the type of events. Configuration shall include assignment of event, alarm, type of Acknowledgement and notification for return to normal or fault status.

4. Event Reporting Actions:

Event Reporting Actions specified shall be automatically launched (under certain conditions) after an event is received by the BAS server software. Operators shall be able to easily define these Reporting Actions. Reporting Actions shall be as follows:

a. Print:

Alarm/Event information shall be printed to the BAS server's PC or a networked printer.

b. Email:

Email shall be sent via any POP3-compatible e-mail server (most Internet Service Providers use POP3). Email messages may be copied to several email accounts.

Note: Email reporting action shall also be used to support alphanumeric paging services, where email servers support pagers.

c. File Write:

The ASCII File write reporting action shall enable the operator to append operator defined alarm information to any alarm through a text file. The alarm information that is written to the file shall be completely definable by the operator. The operator may enter text or attach other data point information (such as AHU discharge temperature and fan condition upon a high room temperature alarm).

5. Event Simulator:

The GUI user shall provide an Event Simulator to test assigned Reporting Actions. The operator shall have the option of using current time or scheduling a specific time to generate the Event.

F. Trends

Trends shall both be displayed and user configurable. Trends shall comprise analog, digital or calculated points simultaneously. A trend log's properties shall be editable.

1. Viewing Trends:

The operator shall have the ability to view trends by using the Trends button in the Graphic view. The system shall allow y- and x-axis maximum ranges to be specified and shall be able to simultaneously graphically display multiple trends per graph.

2. Local Trends:

Trend data shall be collected locally by Multi-Equipment/Single Equipment general-purpose controllers, and periodically uploaded to the BAS workstation if historical trending is enabled. Trend data, including run time hours and start time date shall be retained in non-volatile module memory.

3. Resolution.

Sample intervals shall be as small as one second. Each trended point will have the ability to be trended at a different trend interval. When multiple points are selected for display that has different trend intervals, the system will automatically scale the axis.

4. Dynamic Update.

Trends shall be able to dynamically update at operator-defined intervals.

5. Zoom/Pan.

It shall be possible to zoom-in on a particular section of a trend for more detailed examination and 'pan through' historical data by simply scrolling the mouse.

6. Numeric Value Display.

It shall be possible to pick any sample on a trend and have the numerical value displayed.

7. Copy/Paste.

The operator must have the ability to pan through a historical trend and copy the data viewed to the clipboard using standard keystrokes (i.e. CTRL+C, CTRL+V).

2.3 PROGRAMMING

The system software shall include a Graphic Programming Language (GPL) for all DDC control algorithms resident in standalone control modules. GPL is preferred, but not required. Other methods may be used if the contractor properly informs the District prior to bid time so that a formal review can take place. GPL is a method used to create a sequence of operations by assembling graphic microblocks that represent each of the commands or functions necessary to complete a control sequence. Microblocks represent common logical control devices used in conventional control systems, such as relays, switches, high signal selectors, etc., in addition to the more complex DDC and energy management strategies such as PID loops and optimum start. Each microblock shall be interactive and contain the programming necessary to execute the function of the device it represents.

Graphic programming shall be performed while on screen and using a mouse; each microblock shall be selected from a microblock library and assembled with other microblocks necessary to complete the specified sequence. Microblocks are then interconnected on screen using graphic "wires," each forming a logical connection. Once assembled, each logical grouping of microblocks and their interconnecting wires then forms a graphic function block which may be used to control any piece of equipment with a similar point configuration and sequence of operation.

A. Graphic Sequence

The clarity of the graphic sequence must be such that the operator has the ability to verify that system programming meets the specifications, without having to learn or interpret a manufacturer's unique programming language. The graphic programming must be self-documenting and provide the operator with an understandable and exact representation of each sequence of operation.

B. Simulation

Full simulation capability shall be provided with the graphic programming. Operator shall be able to fully simulate the constructed control sequence prior to downloading into field control modules. Simulation capabilities shall include step-by-step, accelerated time, and operator defined simulation criteria like outside weather, demand, and communication status. Multiple graphic programs shall be simulated and displayed in split screens at the same time.

C. GPL Capabilities

The following is a minimum definition of the capabilities of the Graphic Programming software:

1. Function Block (FB):

Shall be a collection of points, microblocks and wires which have been connected together for the specific purpose of controlling a piece of HVAC equipment or a single mechanical system.

2. Logical I/O:

Input/Output points shall interface with the control modules in order to read various signals and/or values or to transmit signal or values to controlled devices.

3. Microblocks:

Shall be software devices that are represented graphically and may be connected together to perform a specified sequence. A library of microblocks shall be submitted with the control contractors bid.

4. Wires:

Shall be Graphical elements used to form logical connections between microblocks and between logical I/O. Different wires types shall be used depending on whether the signal they conduct is analog or digital.

5. Labels:

Labels shall be similar to wires in that they are used to form logical connections between two points. Labels shall form a connection by reference instead of a visual connection, i.e. two points labeled 'A' on a drawing are logically connected even though there is no wire between them.

6. Parameter:

A parameter shall be a value that may be tied to the input of a microblock.

7. Live Graphical Programs:

The Graphic Programming software must support a ‘live’ mode, where all input/output data, calculated data, and setpoints shall be displayed in a ‘live’ real-time mode.

For each piece of HVAC equipment, the entire graphic program shall be displayed through the GUI. The operator must have the ability to scroll through the entire ‘live’ graphic program as necessary.

PART 3 - PRODUCTS HARDWARE

3.1 BAS OPERATOR WORKSTATION (This hardware is existing)

3.2 NETWORK ROUTERS & BRIDGES & Gateways

The controller network shall use BACnet or LonWorks as its native communication protocol. Network bridges and routers and gateways must be of a modular design to ensure reliability and system performance. Proprietary protocols are NOT acceptable.

Firmware Updates. Utilize FLASH memory to allow firmware updates to be performed remotely.

3.3 STANDALONE CONTROLLERS

A. General Purpose Multiple Application Controllers

General Purpose Multiple Application controllers must use BACnet or LonWorks as the native communication protocol between controllers.

1. Communication Speed.

Controllers shall communicate at a minimum of 156 kbps (BACnet), or 78kbps (LonWorks) lower speeds are unacceptable.

2. General Specification.

Each General Purpose Multiple Application Controller must be capable of standalone direct digital operation utilizing its own 32 bit processor, non-volatile flash memory, input/output, 12 bit A to D conversion, hardware clock/calendar and voltage transient and lightning protection devices. A separate co-processor shall be used for communications to the controller network. All non-volatile flash memory shall have a battery backup of at least five years. Firmware revisions to the module shall be made from the BAS server or remotely over the Intranet or Internet. Controllers that require component changes to implement firmware revisions are NOT acceptable.

3. Point Expansion.

The General Purpose Multiple Application Controllers shall be expandable to the specified I/O point requirements. Each controller shall accommodate multiple I/O Expander Modules via a designated expansion I/O bus port. These expander modules shall expand the total point capacity of each controller up to 192 points where specified. The controller, in conjunction with the expansion modules, shall act as one standalone controller.

4. Point Programming.

All point data, algorithms and application software within a controller shall be custom programmable from the operator workstation.

5. Program Execution.

Each General Purpose Multiple Application Controller shall execute application programs, calculations, and commands via a 32-bit microcomputer resident in the

controller. All operating parameters for application programs residing in each controller shall be stored in read/writeable nonvolatile flash memory within the controller and will be able to upload/download to/from the BAS Server.

6. Self-Test Diagnostics.

Each controller shall include self-test diagnostics, enabling the controller to report malfunctions to the router and BAS Server.

7. PID Loops.

Each General Purpose Multiple Application Controller shall contain both software and firmware to perform full DDC Proportional, Integral, Derivative (PID) control loops and programs.

8. Input-Output Processing:

a. Digital Outputs.

Digital outputs shall be relays, 24 Volts AC or DC maximum, 3 amp maximum current. Each configured as normally open or normally closed using jumpers and provides dry contacts. Each output shall have a manual Hand-Off-Auto switch for local override and an LED to indicate the operating mode. Triac outputs are NOT acceptable. Only one digital output may be assigned to a controlled device.

b. Universal Inputs.

Universal inputs shall be Thermistor (BAPI Curve II) 10K Ohm at 77°F (25°C), 0-5VDC, 10K Ohm maximum source impedance, 0-20mA - 24 VDC loop power, 250 Ohm input impedance, dry contact - 0.5mA maximum current or equal.

c. Analog Output.

Analog outputs shall be electronic, voltage mode 0-10VDC or current mode 4-20mA.

B. General Purpose Single Application Controllers

The General Purpose Single Application Controllers must use BACnet or LonWorks as the native communication protocol between controllers.

1. Communication Speed:

Controllers shall communicate at a minimum of 156 Kbps (BACnet), or 78 Kbps (LonWorks).

2. General Specification:

General Purpose Single Application controllers must be capable of stand-alone DDC operation utilizing its own 32 bit processor, nonvolatile flash memory, input/output, 8 bit A to D conversion, hardware clock/calendar and voltage transient protection devices. A separate co-processor shall be used for communications to the controller network. All RAM memory shall have a battery backup of at least five years. Firmware revisions to the module shall be made from the BAS server or remote locations over the Internet. Controllers that require component changes to implement Firmware revisions are NOT acceptable.

3. Point Programming:

All point data, algorithms, and application software within the controllers shall be custom programmable from the Operator Workstation.

4. Program Execution:

Each General Purpose Single Application Controller shall execute application programs, calculations, and commands via a 32-bit microcomputer resident in the controller. All operating parameters for the application program residing in each controller shall be stored in read/writ able nonvolatile flash memory within the controller and will be able to upload/download to/from the Operator Workstation.

5. Self-Test Diagnostics:

Each controller shall include self-test diagnostics, enabling the controller to report malfunctions to the router and BAS Server input.

6. PID Loops:

Each General Purpose Single Application Controller shall contain both software and firmware to perform full DDC PID control loops.

7. Rooftop Mounting.

The General Purpose Single Application Controllers shall be capable of being mounted directly in or on rooftop AHU equipment.

8. Operating Temperature.

The General Purpose Single Application Controllers shall be capable of proper operation in an ambient temperature environment of -20°F to +150°F (-28.9° to 65.6°C).

9. Input-Output Processing:

a. Digital Outputs.

Digital outputs shall be relays, 24 Volts AC or DC maximum, 3 amp maximum current. Each output shall have a manual Hand-Off-Auto switch for local override and an LED to indicate the operating mode. Triac outputs are NOT acceptable. Only one digital output may be assigned to a controlled device.

b. Universal Inputs.

Universal inputs shall be Thermistor (BAPI Curve II) 10K Ohm at 77°F (25°C), 0-5VDC - 10K Ohm maximum source impedance, 0-20mA - 24 VDC loop power, 250 Ohm input impedance, Dry Contact - 0.5mA maximum current.

c. Analog Electronic Outputs.

Analog electronic outputs shall be voltage mode 0-10VDC or current mode 4-20mA.

C. Unitary or Application Specific Controllers Network

The Unitary Controllers shall use BACnet or Lonworks as the native communications protocol.

1. Communication Speed.

The communication between unitary controllers shall be 38.4 Kbps, lower speeds are unacceptable.

2. Sensor Support.

Each Unitary Controller shall be able to support various types of zone

temperature sensors, such as; temperature sensor only, temperature sensor with built-in

local override switch and temperature sensor with built-in setpoint adjustment switch

3. Visual Status.

Each Unitary Controller and Unitary Controller Interface shall have LED indication for visual status of communication, power, and all outputs.

4. Standalone Algorithm.

In the event of a loss of communication, each Unitary Controller shall control from a standalone algorithm, which maintains the assigned space temperature until communication with the Unitary Control Router is restored.

5. Input/Output Processing:

a. Digital outputs shall be relays, 24 Volts AC or DC maximum, having a 1 Amp maximum current. Each relay shall be configured as normally open or normally closed, and provide a dry contact. Triac outputs are NOT acceptable. Only one digital output may be assigned to a control device.

b. Universal inputs shall be Thermistor Precon Type II, dry contacts or 0-5VDC with 0-10K Ohm input impedance.

c. Analog output electronic, voltage mode 0-10VDC

D. Unitary Controller Router (If required)

A router shall be provided to bridge between the unitary controller sub network and the main controller network if required. The Unitary Controllers Routers shall use BACnet or LonWorks as the native communications protocol between controllers.

3.4 CONTROLLED DEVICES, INPUT DEVICES AND ACCESSORIES

A. AUTOMATIC CONTROLS VALVES:

Attention should be given to the warranty requirements written in paragraph 1.4.D. Controls valves shall be manufactured by Delta or Belimo and shall have the following features:

- Two way
- Ball Valve
- Position Indicator
- 0 to 10 VDC actuator (three point floating is unacceptable).
- Cv Calculated Using 10’ P.D.
- Spring Return (for the 100% outdoor air units only).

B. SPACE TEMPERATURE SENSORS

1. All Areas

a. Thermistor, RTD, or 4-20 ma sensors. (+/- 0.5 F accuracy)

b. Local Set point adjustment

c. LCD Display of room temperature and set point

d. Occupancy Override Pushbutton

e. LED that indicates occupied/unoccupied status

f. Communication Jack

C. CURRENT SENSORS
- **1.** Self powered 0-5 VDC
- **2.** Analog current sensor
- **3.** Range: 0 to 10 amp

D. CONDENSATE DRAIN PAN SWITCHES
- **1.** Float
- **2.** SPDT
- **3.** 125 to 250 volts; ¼ hp

E. DUCT TEMPERATURE SENSORS
- **1.** Thermistor, RTD, or 4 to 20 ma (+/- 1.0 F accuracy)
- **2.** 4” Probe

F. Freeze Stat
- **1.** Manual Reset
- **2.** DPDT switching action
- **3.** 20” Capillary Element
- **4.** Test Lever for manual operation
- **5.** UL Listed

G. Damper Actuator
- **1.** Direct Coupled
- **2.** 24VAC
- **3.** 62 lb.-in torque
- **4.** Two Position Spring Return
- **5.** Position Feedback
- **6.** Pre Cabled Connection
- **7.** Position Indicator
- **8.** Manual Override

H. Dampers
- **1.** Leakage: Not exceed 10 CFM per Square Foot @ 1” S.P.
- **2.** Operating Range: -40° to 200°
- **3.** Blades: Double piece, 22 gauge galvanized steel
- **4.** Bearings: Self-lubrication acetal or bronze
- **5.** Side Seal: Self compensation stainless steel
- **6.** Blade Seal: Santoprene or Silicone

I. ENCLOSURES
- **1.** For housing Unitary or Application Specific Controllers

a. NEMA 1 Enclosure

b. Screw Cover

2. For housing gateways, routers, modems, and single/multipurpose control modules

a. NEMA 12 or NEMA 3R determined by environment

b. Hasp for Padlock

c. Door keyed to key # EK333 cylinder lock (the flat type)

d. Cylinders can be ordered locally from Saucedo Bros-Westside or directly from EMF Co. (1-800-338-6727), 10725 Doric, Dallas, TX.

e. No top penetrations allowed.

f. Sub panel must be large enough to accommodate for one additional module to be installed in the future.

3. Screw Cover

J. TRANSFORMERS

1. UL Listed

2. Class 2

3. 50 VA

K. Flow Switches. Flow-proving switches shall be paddle (water service only) or differential pressure type (air or water service) as shown. Switches shall be UL listed, SPDT snap-acting, and pilot duty rated (125 VA minimum).

1. Paddle switches shall have adjustable sensitivity and NEMA 1 enclosure unless otherwise specified.

2. Differential pressure switches shall have scale range and differential suitable for intended application and NEMA 1 enclosure unless otherwise specified.

L. Relays.

1. Control Relays. Control relays shall be plug-in type, UL listed, and shall have dust cover and LED "energized" indicator. Contact rating, configuration, and coil voltage shall be suitable for application.

2. Time Delay Relays. Time delay relays shall be solid-state plug-in type, UL listed, and shall have adjustable time delay. Delay shall be adjustable ±100% from setpoint shown. Contact rating, configuration, and coil voltage shall be suitable for application. Provide NEMA 1 enclosure for relays not installed in local control panel.

M. Current Transmitters.

1. AC current transmitters shall be self-powered, combination split-core current transformer type with built-in rectifier and high-gain servo amplifier with 4-20 mA two-wire output. Full-scale unit ranges shall be 10 A, 20 A, 50 A, 100 A, 150 A, and 200 A, with internal zero and span adjustment. Unit accuracy shall be ±1% full-scale at 500 ohm maximum burden.

2. Transmitter shall meet or exceed ANSI/ISA S50.1 requirements and shall be UL/CSA recognized.

3. Unit shall be split-core type for clamp-on installation on existing wiring.

N. Voltage Transmitters.

1. AC voltage transmitters shall be self-powered single-loop (two-wire) type, 4-20 mA output with zero and span adjustment.

2. Adjustable full-scale unit ranges shall be 100-130 Vac, 200-250 Vac, 250-330 Vac, and 400-600 Vac. Unit accuracy shall be ±1% full-scale at 500 ohm maximum burden.

3. Transmitters shall meet or exceed ANSI/ISA S50.1 requirements and shall be UL/CSA recognized at 600 Vac rating.

O. Voltage Transformers.

1. AC voltage transformers shall be UL/CSA recognized, 600 Vac rated, and shall have built-in fuse protection.

2. Transformers shall be suitable for ambient temperatures of 4°C-55°C (40°F-130°F) and shall provide ±0.5% accuracy at 24 Vac and 5 VA load.

3. Windings (except for terminals) shall be completely enclosed with metal or plastic.

P. Current Switches.

1. Current-operated switches shall be self-powered, solid-state with adjustable trip current. Select switches to match application current and DDC system output requirements.

Q. Pressure Transducers.

1. Transducers shall have linear output signal and field-adjustable zero and span.

2. Continuous operating conditions of positive or negative pressure 50% greater than calibrated span shall not damage transducer sensing elements.

3. Water pressure transducer diaphragm shall be stainless steel with minimum proof pressure of 1000 kPa (150 psi). Transducer shall have 4-20 mA output, suitable mounting provisions, and block and bleed valves.

4. Water differential pressure transducer diaphragm shall be stainless steel with minimum proof pressure of 1000 kPa (150 psi). Over-range limit (differential pressure) and maximum static pressure shall be 2000 kPa (300 psi.) Transducer shall have 4-20 mA output, suitable mounting provisions, and 5-valve manifold.

R. Differential Pressure Switches. Differential pressure switches (air or water service) shall be UL listed, SPDT snap-acting, pilot duty rated (125 VA minimum) and shall have scale range and differential suitable for intended application and NEMA 1 enclosure unless otherwise specified.

S. Local Control Panels.

Indoor control panels shall be fully enclosed NEMA 1 construction with hinged door key-lock latch and removable sub-panels. A common key shall open each control panel and sub-panel.

Prewire internal and face-mounted device connections with color-coded stranded conductors tie-wrapped or neatly installed in plastic troughs. Field connection terminals shall be UL listed for 600 V service, individually identified per control and interlock drawings, with adequate clearance for field wiring.

Each local panel shall have a control power source power switch (on-off) with overcurrent protection.

T. Air Flow Monitoring

A. Single Probe Air Flow Measuring Sensor (to be factory mounted)

1. The single probe airflow-measuring sensor shall be mounted with an adjustable sensor insertion length of up to eight inches. The transmitter shall produce a 4-20 mA or 0-10 VDC signal linear to air velocity. The sensor shall be a hot wire anemometer and utilize two temperature sensors and a heater element temperature. The other sensor shall measure the downstream air temperature. The temperature differential shall be directly related to airflow velocity.

B. Duct Air Flow Measuring Stations (to be factory mounted)

1. Each device shall be designed and built to comply with, and provide results in accordance with, accepted practice as defined for system testing in the ASHRAE Handbook of fundamentals, as well as in the Industrial Ventilation Handbook.

2. Airflow measuring stations shall be fabricated of 14-gauge galvanized steel welded casing with 90 Deg. connecting flanges. Each station shall be complete with an air directionalizer and parallel cell profile suppressor (3/4" maximum cell) across the entering air stream and mechanically fastened to the casing in such a way to withstand velocities up to 6000 feet per minute. This air directionalizer and parallel cell honeycomb suppressor shall provide 98% free area, equalize the velocity profile, and eliminate turbulent and rotational flow from the air stream prior to the measuring point.

3. The total pressure measurement side (high side) will be designed and spaced to the Industrial Ventilation Manual 16th Edition, Page 9-5. The self-averaging manifolding will be manufactured of brass and copper components.

4. The static pressure sensing probes (low side) shall be bullet-nosed shaped, per detailed radius, as illustrated in Industrial Ventilation Manual 16th Edition, Page 9-5.

5. The main take-off point from both the total pressure and the static pressure manifolds must be symmetrical.

6. Total and static pressure manifolds shall terminate with external ports for connection to control tubing. An identification label shall be placed on each unit casing, listing model number, size, area, and specified airflow capacity.

7. Acceptable manufacturers: Air Monitor Corp., Tek-Air, Ebtron, and Dietrich Standard.

3.5 WIRING AND RACEWAY:

A. Wiring

1. All wiring shall comply with the requirements of applicable portions of Division 16 and all local and national electric codes.
2. All control wire conductors shall be solid 18 gauge copper minimum. Twisted pair cables for inputs and outputs, RG59U coaxial cable and/or 10BaseT cabling shall be used for high speed communication cabling. Shielded conductors shall be used based on manufacturer recommendations.
3. All wiring shall be installed in raceway. Unenclosed plenum rated wiring (e.g., not installed in any type of raceway) is acceptable above lay-in ceiling areas and accessible, concealed areas.
4. Raceway above suspended ceilings shall be installed as tight to the structural ceiling as space permits and attached using raceway clips, malleable iron straps, "Trapeze" supports, or to suspended ceiling hanger wires using "Caddy clips" or equivalent. Raceway or tubing shall not be attached to or use as support the suspended ceiling hanger wires if raceway or tubing is over ¾ inches in diameter. Installation shall be parallel to building lines.
5. All vertical runs of raceway shall be through new core drills. Existing core drills shall not be used unless shown on the drawings or approved in writing by the Owner. The installation shall be supported above each floor penetration using clamps to Unistrut.
6. All wire that enter or leaves a building structure and connects to another building or equipment not attached to the building shall be installed with lightning protection.
7. All wire terminations shall use compression type spade lugs, "Stay-Kon" or equivalent, where termination space permits. No spade lugs are necessary for "Wiegand" or equivalent type termination blocks.
8. All wire splices shall be with compression type insulated splice connectors or properly sized wire-nut connectors. Hand twisted, soldered and/or taped terminations or splices are not acceptable.
9. Under no circumstances shall raceway, J-Boxes, or any BAS equipment be run in, mounted on, or suspended from any other building equipment, raceways, piping, ductwork, etc. All the material installed under this contract must be mounted on or supported from the building structure or supports furnished by this contractor.
10. All shielded wiring shall be terminated based on manufacturer requirements or recommendations.
11. All communication wiring (i.e., for the DDC panel and Dedicated Controller networks) between junctions and tees shall be via unspliced conductors, as long as the necessary conductor length is available.
12. All conduit, wiring, accessories and wiring connection required for the installation BAS, as herein specified, shall be provided by BAS contractor unless specifically shown on the Electrical drawings under Division 16 Electrical.

B. Conduit:

Flexible metallic conduit (maximum three foot length) shall be used for connections to motors, actuators, controllers, and sensors mounted on vibration producing equipment. Liquid-tight flexible conduit shall be used in exterior locations and interior locations subject to moisture.

C. Junction Boxes:

Junction boxes shall be provided at all cable splices and equipment terminations. Interior dry location J-boxes shall be galvanized pressed steel, nominal four inch square with blank cover painted yellow to identify the conduit as BAS wiring. Exterior and damp location J-boxes shall be cast alloy FS boxes with threaded hubs and gasket covers.

D. Accessories:

Provide non-metallic bushings at all raceway terminations for wiring and tubing. Provide grommets at all enclosure openings.

E. Enclosures:

1. The wiring within all enclosures shall be run in plastic trays or attached to a perforated backplane using tie-wraps. Wiring within DDC panels may be run using adhesive-backed tie wraps.

2. Mount all enclosures, including those that house DDC panels, slaves and field device panels, so that the top of the enclosure does not exceed ix feet, six inches (6'-6"); and the center of any gauge/switch cluster does not exceed five foot, six-inches (5'-6") from the floor or is less than four feet (4') from the floor.

3. Top penetrations on enclosures are not allowed.

F. Power Wiring:

1. All BAS equipment power shall be obtained from dedicated circuits on the nearest available 120 volt panel and clearly labeled. Any BAS equipment that controls equipment powered by emergency power shall be circuited to emergency power panels.

2. Each control power circuit shall be protected by Delta LFT730 line filters or any UL1449/400-volt noise suppressor. Install protection in field device panels on the line voltage side of control transformers. Unitary controllers that tap power from equipment do not require filters.

3.6 IDENTIFICATION:

A. All wiring shall be labeled with "Brady" markers or pre-printed identification sleeves at each end and junction point.

B. Laminated plastic nameplates are required on the outside of al DDC panel and field device panel enclosures. The nameplates shall be 1/16 inch thick and a minimum of one inch by three inches. The lettering shall be white on a black (red if identified on the drawings as "emergency panel") background with minimum ¼ inch high engraved letters. The nameplates shall be installed with pop rivets.

C. All field devices and controllers not located in a field device panel enclosure and final control wire terminations to devices not supplied by the Contractor (e.g., motor controllers) shall be identified with a laminated plastic tag. The tag shall be 2-1/2" x 3-1/2" minimum ion dimension; be made of yellow, translucent plastic; and have a brass grommet hole. Use Brady 23234. The tag's legend shall be manufacturer printed or typed by the Contractor to a white card within the laminate, and sealed watertight. Installation shall be

directly on the device identified, not on any associated raceway, tubing, piping, ductwork, etc. Affix tag using a non-reusable tie wrap so that it does not interfere with the operation or maintenance of the device or any associated equipment.

D. Terminations to field devices not supplied by the Contractor (e.g., motor controllers and panel boards) that are exposed in occupied spaces shall be identified using laminated plastic name plates as specified.

E. Any field devices exposed in occupied spaces (e.g., space temperature or humidity sensors) shall be identified using a permanent marker such as a "Sharpie". The identification shall be marked on the device or device backplate and hidden by the device's cover or enclosure.

F. Where adhesive-backed identification is allowed, thoroughly clean the surface to which the label shall be applied with a solvent before applying the identification. Use an epoxy to affix the identification in addition to any adhesive backing on the identification.

G. All spare wiring or tubing shall be identified as "spare" on both ends along with the termination locations of the opposite ends.

PART 4 – DDC SOFTWARE

4.1 OVERVIEW

The system shall continuously perform Direct Digital Control (DDC) functions at the local control module in a stand-alone mode. Using Graphical Programming, the operator shall be able to design and modify control sequence of operation and all tuning parameters.

A. Minimum Function

Each control module shall perform the following functions:

1. Identify, time/date stamp and report events

2. Execute all application programs specified

3. Execute DDC algorithms

4. Trend and store data

B. Control Failure Mode

In the event of a control module failure, all points under its control shall be commanded to the failure mode as indicated on the I/O Summary Table. All DDC software shall reside in the respective control module.

1. Orderly Shutdown.

Power failures shall cause the control module to go into an orderly shutdown with no loss of program memory.

2. Automatic Restart.

Upon resumption of power, the control module shall automatically restart and print out the time and date of the power failure and restoration at the respective Workstation system.

3. Automatic Restart.

The restart program shall automatically restart affected field equipment. The operator shall be able to define an automatic power up time delay for each piece of equipment under control.

PART 5 - APPLICATIONS SOFTWARE

5.1 GENERAL

All software application algorithms described below MUST reside at the local Multi-Application or Single-Application Controller level. Systems that rely on a workstation PC, server or router to perform these functions are NOT acceptable. The following applications software shall be provided for the purpose of optimizing energy consumption while maintaining occupant comfort:

A. Time of Day Scheduling (TOD)

The system shall be capable of the following scheduling features:

1. Schedule by Type.

Scheduling by building, area, zone, groups of zones, individually controlled equipment and groups of individually controlled equipment. Each schedule shall provide beginning and ending dates and times (hours: minutes). A weekly repeating schedule, i.e. between 8:00 a.m. and 5:00 p.m., Monday through Friday shall constitute one schedule.

2. Schedule in Advance.

Dated schedules shall be entered up to 2 (TWO) years in advance.

3. Self-Deleting.

Schedules shall be self-deleting when effective dates have passed.

4. Leap Year.

Leap years shall be adjusted automatically without operator intervention.

B. Optimum Start/Stop (OSS)/Optimum Enable/Disable (OED)

This application provides software to start and stop equipment on a sliding schedule based on the individual zone temperature and the heating/cooling capacity in °F/hour of the equipment serving that zone. The heating/cooling capacity value shall be operator adjustable. Temperature compensated peak demand limiting shall remain in effect during morning start up to avoid setting a demand peak.

C. Source Temperature Optimization (STO)

The system shall automatically perform source optimization for all air handling units, chillers and boilers in response to the needs of other downstream pieces of equipment, by increasing or decreasing supply temperature setpoints, i.e. chilled water, discharge air, etc. using owner defined parameters. In addition to optimization, the STO capability shall also provide for starting and stopping primary mechanical equipment based on zone occupancy and/or zone load conditions.

D. Demand Limiting (DL) - Temperature Compensated

The DL application shall be programmable for a minimum of six separate time of day KW demand billing rate periods. The system shall be capable of measuring electrical usage from multiple meters serving one building and each piece of equipment being controlled on the LAN shall be programmable to respond to the peak demand information from its respective meter.

1. Sliding Window.

The demand control function shall utilize a sliding window method with the operator being able to establish the kilowatt threshold for a minimum of three adjustable demand levels. The sliding window interval shall be operator selectable in increments of one minute, up to 60 minutes. Systems that incorporate rotating shed tables are NOT acceptable.

E. Setpoints for Defined Demand Level.

The operator shall have the capability to set the individual equipment temperature setpoints for each operator defined demand level. Equipment shall not be shed if these reset setpoints are not satisfied; rather the setpoint shall be revised for the different established demand levels. The system shall have failed meter protection, such that when a KW pulse is not received from the utility within an operator adjustable time period, an alarm will be generated. The system software will automatically default to a predetermined fail-safe shed level.

F. Information Archiving.

The system shall have the ability to archive demand and usage information for use at a later time. System shall permit the operator access to this information on a current day, month to date and a year to date basis.

G. Day/Night Setback (DNS)

The system shall allow the space temperature to drift down [up] within a preset [adjustable] unoccupied temperature range. The heating [cooling] shall be activated upon reaching either end of the DNS range and shall remain activated until the space temperature returns to the DNS range.

1. Outside & Exhaust Air.

The system shall be capable of closing all outside air and exhaust air dampers during the unoccupied period.

2. 100 % Outside Air Units.

These units shall not operate during the night setback and morning warm-up modes of operation.

H. Unoccupied Space Temperature.

Unoccupied space temperature shall be monitored by the DDC temperature sensors located in the individual zones being controlled or within a representative room.

I. Parameter Changes.

Operator shall be able to define, modify or delete the following parameters.

1. DNS setpoint temperature(s)

2. Temperature band for night heating operation

3. Period when the DNS is to be activated

J. Timed Local Override (TLO)

The system shall have TLO input points that permit the occupants to request an override of equipment that has been scheduled OFF. The system shall turn the equipment ON upon receiving a request from the local input device. Local input devices shall be push button (momentary contact), wind-up timer, or ON/OFF switches as detailed in the I/O summary.

1. Equipment On Time.

If a push button is used the system operator shall be able to define the duration of equipment ON time per input pulse and the total maximum ON time permitted. The input point will cancel override time already entered. If a wind-up timer is used the equipment will stay in override mode until the timer expires. Year to date, month-to-date and current day override history shall be maintained for each TLO input point. History data shall be accessible by the operator at any time and shall be capable of being automatically stored on hard disk and/or printed on a daily basis.

K. Space Temperature Control (STC)

There shall be two space temperature setpoints, one for cooling and one for heating, separated by a dead band. Only one of the two setpoints shall be operative at any time. The cooling setpoint is operative if the actual space temperature has more recently been equal to or greater than the cooling setpoint. The heating setpoint is operative if the actual space temperature has more recently been equal to or less than the heating setpoint. There are two modes of operation for the setpoints, one for the occupied mode (example: heating = 72°F or 22°C, cooling = 76°F or 24.4°C) and one for the unoccupied mode (example: heating = 55°F or 12.7°C, cooling = 90°F or 32°C).

1. Schedule.

The occupied/unoccupied modes may be scheduled by time, date, or day of week.

L. Color Code.

One of seven colors shall be generated to represent the comfort conditions in the space, and shall be displayed graphically at the operator station.

1. If the actual space temperature is in the dead band between the heating setpoint and the cooling setpoint, the color displayed shall be green for the occupied mode, representing ideal comfort conditions. If in the unoccupied mode, the color displayed shall be gray representing 'after-hours' conditions.

2. If the space temperature rises above the cooling setpoint, the color shall change to yellow. Upon further rise beyond the cooling setpoint plus an offset, the color shall change to orange. Upon further rise beyond the cooling setpoint plus the yellow band

offset, plus the orange band offset, the color shall change to red indicating unacceptable high temperature conditions. At this point an alarm shall be generated to notify the operator.

3. When space temperature falls below the heating setpoint, the color shall change to light blue. Upon further temperature decrease below the heating setpoint minus an offset, the color shall change to dark blue. Upon further space temperature decrease below the heating setpoint minus the light blue band offset minus the dark blue band offset the color shall change to red indicating unacceptable low temperature conditions. At this point an alarm shall be generated to notify the operator.

M. Operator Definable.

All setpoints and offsets shall be operator definable. When in the occupied mode, start-up mode, or when heating or cooling during the night setback unoccupied mode, a request shall be sent over the network to other equipment in the HVAC chain, such as to an AHU fan that serves the space, to run for ventilation. The operator shall be able to disable this request function if desired.

N. Additional Cooling.

When comfort conditions are warmer than ideal, indicated by the colors yellow, orange, and high temperature red, a request for additional cooling shall be sent over the network to other cooling equipment in the HVAC chain, such as a chiller. This information is to be used for optimization of equipment in the HVAC chain. The operator shall be able to disable this function if desired.

O. Additional Heating.

When comfort conditions are cooler than ideal; indicated by the colors light blue, dark blue and low temperature red; a request for additional heating shall be sent over the network to other heating equipment in the HVAC chain, such as a boiler. This information is to be used for optimization of equipment in the HVAC chain. The operator shall be able to disable this function if desired.

P. Cooling/Heating Setpoints.

The cooling [and heating] setpoints may be increased [decreased] under demand control conditions to reduce the cooling (heating) load on the building during the demand control period. Up to three levels of demand control strategy shall be provided. The operator may predefine the amount of setpoint increase [decrease] for each of the three levels. Each space temperature sensor in the building may be programmed independently.

Q. Optimum Start.

An optimum start-up program transitions from the unoccupied setpoints to the occupied setpoints. The optimum start-up algorithm considers the rate of space temperature rise for heating (morning warm-up) and the rate of space temperature fall for cooling (morning cool down) under nominal outside temperature conditions; it also considers the outside temperature; and the heat loss and gain coefficients of the space envelope (AI: Space

Temperature). During morning warm-up operation, the relief air dampers shall remain closed and the makeup air units shall remain off.

R. PID Loop.

A PID control loop, comparing the actual space temperature to its setpoint, shall modulate the dampers and heating coil valve or heating stages in sequence to achieve the setpoint target.

PART 6 - SEQUENCES OF OPERATION AND POINT LIST

Outdoor Lighting

Run Conditions - Scheduled:
The fan shall run according to a user definable schedule.

	Hardware Points				Software Points					
Point Name	AI	AO	BI	BO	AV	BV	Sched	Trend	Alarm	Show On Graphic
Lighting Output				×				×		×
Totals	0	0	0	1	0	0	0	1	0	1

Total Hardware (1) Total Software (1)

Exhaust Fan - On/Off (typical)

Run Conditions - Scheduled:
The fan shall run according to a user definable schedule.

Fan:
The fan shall have a user definable (adj.) minimum runtime.

Fan Status:
The controller shall monitor the fan status.

Alarms shall be provided as follows:

- Fan Failure: Commanded on, but the status is off.
- Fan in Hand: Commanded off, but the status is on.
- Fan Runtime Exceeded: Fan status runtime exceeds a user definable limit (adj.).

Hardware Points	Software Points

Point Name	AI	AO	BI	BO	AV	BV	Sched	Trend	Alarm	Show On Graphic
Fan Status			×					×		×
Fan Start/Stop				×				×		×
Schedule							×			
Fan Failure									×	
Fan in Hand									×	
Fan Runtime Exceeded									×	
Totals	0	0	1	1	0	0	1	2	3	2

Total Hardware (2) Total Software (6)

Air Conditioning Unit

Run Conditions - Scheduled:
The unit shall run according to a user definable time schedule in the following modes:

- Occupied Mode: The unit shall maintain
  - A 73°F (adj.) cooling setpoint
  - A 70°F (adj.) heating setpoint.
- Unoccupied Mode (night setback): The unit shall maintain
  - A 85°F (adj.) cooling setpoint.
  - A 55°F (adj.) heating setpoint.

Alarms shall be provided as follows:

- High Zone Temp: If the zone temperature is greater than the cooling setpoint by a user definable amount (adj.).
- Low Zone Temp: If the zone temperature is less than the heating setpoint by a user definable amount (adj.).

Zone Setpoint Adjust:
The occupant shall be able to adjust the zone temperature heating and cooling setpoints at the zone sensor.

Zone Optimal Start:
The unit shall use an optimal start algorithm for morning start-up. This algorithm shall minimize the unoccupied warm-up or cool-down period while still achieving comfort conditions by the start of scheduled occupied period.

Zone Unoccupied Override:
A timed local override control shall allow an occupant to override the schedule and place the unit into an occupied mode for an adjustable period of time. At the expiration of this time, control of the unit shall automatically return to the schedule.

Supply Air Smoke Detection:
The unit shall shut down and generate an alarm upon receiving a supply air smoke detector status.

Supply Fan:
The supply fan shall run anytime the unit is commanded to run, unless shutdown on safeties. To prevent short cycling, the supply fan shall have a user definable (adj.) minimum runtime.

Alarms shall be provided as follows:

- Supply Fan Failure: Commanded on, but the status is off.
- Supply Fan in Hand: Commanded off, but the status is on.
- Supply Fan Runtime Exceeded: Status runtime exceeds a user definable limit (adj.).

Cooling Stages:
The controller shall measure the zone temperature and stage the cooling to maintain its cooling setpoint. To prevent short cycling, there shall be a user definable (adj.) delay between stages, and each stage shall have a user definable (adj.) minimum runtime.

The cooling shall be enabled whenever:

- Outside air temperature is greater than 60°F (adj.).
- AND the economizer (if present) is disabled or fully open.
- AND the zone temperature is above cooling setpoint.
- AND the supply fan status is on.
- AND the heating is not active.

Gas Heating Stages:
The controller shall measure the zone temperature and stage the heating to maintain its heating setpoint. To prevent short cycling, there shall be a user definable (adj.) delay between stages, and each stage shall have a user definable (adj.) minimum runtime.

The heating shall be enabled whenever:

- Outside air temperature is less than 65°F (adj.).
- AND the zone temperature is below heating setpoint.
- AND the supply fan status is on.
- AND the cooling is not active.
- AND the economizer is not active.

Economizer:
The controller shall measure the zone temperature and modulate the economizer dampers in sequence to maintain a setpoint 2°F less than the zone cooling setpoint. The outside air dampers shall modulate to maintain CO2 level setpoint whenever occupied.

The economizer shall be enabled whenever:

- Outside air temperature is less than 65°F (adj.).
- AND the outside air temperature is less than the return air temperature.
- AND the supply fan status is on.

The economizer shall close whenever:

- Mixed air temperature drops from 45°F to 40°F (adj.).
- OR on loss of supply fan status.
- OR the freezestat (if present) is on.

The outside and exhaust air dampers shall close and the return air damper shall open when the unit is off. If Optimal Start Up is available, the mixed air damper shall operate as described in the occupied mode except that the outside air damper shall modulate to fully closed.

Minimum Outside Air Ventilation -:
The outside air dampers shall maintain a minimum air flow during building occupied hours and be closed during unoccupied hours. Carbon dioxide shall be monitored and damper adjustments made to maintain CO2 setpoint. Audible alarm and notification alarm sent via e-mail to be executed when CO2 levels are exceeding setpoint.

Mixed Air Temperature:
The controller shall monitor the mixed air temperature and use as required for economizer control (if present) or preheating control (if present).

Alarms shall be provided as follows:

- High Mixed Air Temp: If the mixed air temperature is greater than 90°F (adj.).
- Low Mixed Air Temp: If the mixed air temperature is less than 45°F (adj.).

Supply Air Temperature:
The controller shall monitor the supply air temperature.

Alarms shall be provided as follows:

- High Supply Air Temp: If the supply air temperature is greater than 120°F (adj.).
- Low Supply Air Temp: If the supply air temperature is less than 45°F (adj.).

	Hardware Points				Software Points					
Point Name	AI	AO	BI	BO	AV	BV	Sched	Trend	Alarm	Show On Graphic
Zone Temp	×							×		×
Zone Setpoint Adjust	×									×
Mixed Air Temp	×							×		×
Return Air Temp										
Supply Air Temp	×							×		×
Mixed Air Dampers		×						×		×
Zone Override			×					×		×
Supply Air Smoke Detector			×					×	×	×
Supply Fan Status			×					×		×

	Hardware Points				Software Points					
Point Name	AI	AO	BI	BO	AV	BV	Sched	Trend	Alarm	Show On Graphic
Supply Fan Start/Stop				×				×		×
Cooling Stage 1				×				×		×
Cooling Stage 2				×				×		×
Heating Stage 1				×				×		×
Heating Stage 2				×				×		×
Economizer Zone Temp Setpoint					×			×		×
Schedule							×			
Heating Setpoint								×		×
Cooling Setpoint								×		×
High Zone Temp									×	
Low Zone Temp									×	
Supply Fan Failure									×	
Supply Fan in Hand									×	
Supply Fan Runtime Exceeded									×	
Compressor Runtime Exceeded									×	
High Mixed Air Temp									×	
Low Mixed Air Temp									×	
High Return Air Temp										
Low Return Air Temp										
High Supply Air Temp									×	
Low Supply Air Temp									×	

Outside Air Conditions (typical of 1)

Outside Air Conditions:
The controller shall monitor the outside air temperature and humidity and calculate the outside air enthalpy on a continual basis. These values shall be made available to the system at all times.

Alarm shall be generated as follows:

- Sensor Failure: Sensor reading indicates shorted or disconnected sensor. In the event of a sensor failure, an alternate outside air conditions sensor shall be made available to the system without interruption in sensor readings.

Outside Air Temperature History:
The controller shall monitor and record the high and low temperature readings for the outside air. These readings shall be recorded on a daily, month-to-date, and year-to-date basis.

	Hardware Points				Software Points					
Point Name	AI	AO	BI	BO	AV	BV	Sched	Trend	Alarm	Show On Graphic
Outside Air Temp	×							×		×
Outside Air Humidity	×							×		×
Outside Air Enthalpy					×			×		×
High Temp Today								×		×
High Temp Month-to-Date								×		×
High Temp Year-to-Date								×		×
Low Temp Today								×		×
Low Temp Month-to-Date								×		×
Low Temp Year-to-Date								×		×
Sensor Failure									×	
Totals	2	0	0	0	1	0	0	9	1	9

Total Hardware (2) Total Software (11)

SECTION 26 05 00 – COMMON WORK RESULTS FOR ELECTRICAL

PART 1 - GENERAL

Related Documents:

A. Drawings and general provisions of Contract, including General and Supplementary Conditions and Division-01 Specification sections, apply to work of this section.

Description of Work:

A. This section specified several categories of provisions for electrical work including:
   1. Certain adaptive expansions of requirements specified in Division 01,
   2. General performance requirements within the electrical systems as a whole, and,
   3. General work to be performed as electrical work, because of its close association.

Summary of Electrical Work:

A. Refer to the E-series drawings for graphic representations, schedules and notations showing electrical work.

B. Refer to the Division 26 sections for the primary technical specifications of electrical work.

Coordination of Electrical Work:

A. Refer to the Division 01 sections for general coordination requirements applicable to the entire work. It is recognized that the contract documents are diagrammatic in showing certain physical relationships which must be established within the electrical work, and in its interface with other work including utilities and mechanical work, and that such establishment is the exclusive responsibility of the Contractor.

B. Arrange electrical work in a neat, well organized manner with conduit and similar services running parallel with primary lines of the building construction and with a minimum of 7’0” o.c. where possible.

C. Locate operating and control equipment properly to provide easy access, and arrange entire electrical work with adequate access for operation and maintenance.

D. Advise other trades of openings required in their work for the subsequent move-in of large units of electrical work (equipment).

E. Contractor to identify all electrical circuits that serve the areas where no work will be performed and all existing exterior circuits so that they are re-connected to the corresponding panel.

Coordinating Drawings:

A. For locations where several elements of electrical (or combined mechanical and electrical) work must be sequenced and positioned with precision in order to fit into the available space, prepare coordination drawings (shop drawings) showing the actual physical dimensions (at accurate scale) required for the installation if deemed necessary by Architect or Engineer. Prepare and submit these coordination drawings, if required, prior to purchase-fabrication-installation of any of these elements involved in the coordination.

B. The Drawings and these Specifications are complementary, each one to the other, and what is called for in one shall be as binding as if called for by both. Carefully examine the Drawings and

Specifications and report any discrepancies affecting the work to the Architect. The Architect will issue such written instructions or interpretations as may be required.

C. The Electrical Plans are diagrammatic, but shall be followed as closely as actual construction and the work of the other trades will allow. Such minor changes as are necessary to make the electrical work conform to the work of other trades and to the building shall be made without cost to the Owner.

D. Circuits and feeders shall be as shown and no deviations from the indicated outlet-circuit grouping will be permitted, except by permission of the Architect. Branch circuit numbers are for guidance only and need not necessarily conform to the finished job. Actual circuit numbers used shall be recorded on "As-built" drawings.

E. The maximum number of circuits combined in one raceway shall be two. The circuits shown on the plan can be combined but must be shown on the 'AS BUILT' drawings.
Quality Assurance and Standards:

A. Refer to Division 01 for general administrative/procedural requirements related to compliance with codes and standards. Specifically, for the work (in addition to standards specified in individual work sections), the following standards are imposed, as applicable to the work in each instance:

AWS standards for welding
ANSI C 2, National Electrical Safety Code
ANSI C 73, Dimensions of Attachment Plugs and Receptacles
NECA standards for installation
NEMA standards for materials and products.

Laws, Codes and Ordinances:

A. All work and material shall conform to the requirements of O.S.H.A. and all National, and State Laws and ordinances having jurisdiction at the job site. The (N.E.C.) National Electrical Code 2011 Edition, or latest edition being enforced, shall be strictly adhered to; N.E.C. requirements are considered "minimum requirements". Where requirements of the Contract Documents exceed N.E.C., the Contract Document governs. This Contractor shall be licensed to work in the local area.

B. Specialty subcontractor (Fire Alarm, Security Systems, if applicable), shall be duly licensed by the State of Texas to sell, install and service Fire Alarm and Security Systems. All employees shall be duly registered and records maintained as required by applicable State of Texas laws. The Specialty Contractor shall submit a copy of his fire alarm and security systems license at the time of product submittal.

C. The latest A.D.A. requirements governing this project must be adhered to.

D. Secure permits and pay permit and inspection fee as required by local authorities.

E. Upon completion of the work, furnish to the Owner a certificate of final inspection and approval from the electrical inspection bureau having jurisdiction.

F. All electrical systems shall be grounded in strict accordance with the requirements of the National Electrical Code.

G. All electrical requirements must be coordinated with the local electric utility for temporary and permanent service.

Submittal:

A. Refer to the Division 01 for general requirements conceding work related and administrative

submittal. All descriptive and technical data and shop drawings shall bear signed certification to the effect that they have been carefully examined and found to the correct with respect to dimension, space available, non-interference with other trades and that the equipment complies with all the requirements of these specifications. Where catalog data is submitted, the proposed items shall be clearly "flagged" or otherwise identified, so that no confusion exists. Without the above certification shop drawings and submittal will no be approved.

B. Reproduced copies of product data showing pictures of item to be submitted shall be clear, sharp and show product in detail. Reproduced copies where product picture is not clear or blurred will not be accepted.

C. Submittal shall be separated into the following categories.
(1) Lighting Fixtures and Lamps (2) Wiring Devices (3) Switchgear (including Switchboards, Panelboards and Motor Control Centers) (4) Motor/Circuit Disconnects and Transformers (6) Special Systems (including Fire Alarm, P.A., Program/Clock, and Intrusions Alarm), if applicable.

D. Each category shall be separately bound in booklet form; loose sheets or sheets merely stapled together without report/presentation cover or soft-cover will not be accepted.

E. Submittal which are not separated into the above mentioned categories and/or not appropriately bound will not be accepted.

Temporary Facilities:

A. Refer to the Division 01 sections for general requirements on temporary facilities. Except for self-contained facilities, connect and terminate electrical temporary facilities at the locations indicated or, if not otherwise indicated, at locations as determined by the Contractor to fulfill project requirements.

B. Do not interrupt or disrupt power service to existing facilities of the Owner or others, except with prearrangement and agreement on time of interruption as needed to make temporary connection for temporary power service.

C. Do not subject electrical facilities (either temporary work or temporary use of permanent work) to higher demand or loading than designed for. Where this conditions present, the electrical subcontractor shall be responsible for obtaining temporary electrical power from the local electric utility. All charges for temporary service shall be borne by the General Contractor under his bid price. Location, size and type for service shall be compatible to job requirements.

D. When temporary electrical service is no longer needed for construction work, remove electrical temporary facilities and temporary provisions of all permanent electrical work. Repair and restore (or replace) work damaged by installation and operation of electrical systems which have been used to provide temporary services, to the condition of new and unused work except for normal wear.

E. Electrical work installed as temporary facilities shall, upon removal, remain property of the Installer.

F. Replace worn parts of permanent electrical work, where used as temporary facilities prior to the Owner's acceptance and assumed operation. Where lamps of permanent electrical light fixtures have been used for temporary lighting, replace lamps which have burned out or are noticeable dimmed by temporary use.

Products, Electrical Work:

A. Refer to Division 01 sections for general requirements on products, materials and equipment. The

following provisions expand or modify the requirement as applicable to electrical work.

B. Prepare the product listing for electrical work, separate from the listing(s) of products for other work. Include listing of each significant item of equipment and material used in work; and indicate the generic name, product name, manufacturer, model number, and related specification section number(s). Material such as conductors, conduit and boxes taken from installer's stock need not be listed.

C. For principal equipment items, list the input/output ratings.

D. Submit list within 30 days of Contract Date.

E. All material shall be new and shall bear the label of the Underwriter's Laboratories, Inc., or be listed under reexamination service. All materials shall be of the best grade and latest pattern of manufacturer as specified. All work shall be performed in a neat, workmanlike manner and shall present a neat mechanical appearance when completed.

F. Provide products which are compatible with other products of the electrical work and with other work requiring interface with the electrical work, including electrical connections and control devices. For exposed electrical work, coordinate colors and finishes with other work.

Electrical Product Substitution:

A. Manufacturer's catalog numbers are specified for the purpose of establishing a standard. Substitutions for electrical equipment, will be permitted, if submitted in writing, 14 days prior to the Bidding Date, for approval by the Architect/Engineer, as being equal to, or better than, the specified items in every respect. Electrical equipment, devices, etc. may have substitutions only in equal appearance, quality and function to, or better than, the specified item. Complete descriptive and technical data shall be submitted on all proposed substitute items, together with the same data on the specified items. Material samples of the proposed substitute item and the specified items shall be submitted for comparison and test if requested by the Architect/Engineer.

B. All requests for substitution of equipment shall be made in writing to the Architect no less than 14 days prior to bidding date, by each individual bidder, with the certification that the "substitute item" is equal in appearance, quality and function or better than the specified item in every detail. The certification shall be signed by the individual holding the Master Electricians' License.

C. If notice of approval has NOT been published by the bid date, the request for substitution is disapproved.

PARTS 2 AND 3 - PRODUCTS AND EXECUTION

Electrical System Identification:

A. Provide engraved plastic laminated nameplates at locations of major units of electrical equipment including panelboards, control centers and similar systems. Additional and specific nameplate requirements appear in other Division 26 Sections.

Cutting and Patching:

A. Comply with the requirements of Division 01 for the cutting and patching of other work to

accommodate the installation of electrical work. Except as individually authorized by the Architect/Engineer, cutting and patching of electrical work to accommodate the installation of other work not permitted.

B. Do not cut structural framing, walls, floors, decks and other members intended to withstand stress, except with the Architect's or Engineer's written authorization. Authorization will be granted only where there is no other reasonable method for completing the electrical work, and where the proposed cutting clearly does not materially weaken the structure.

C. Where patching is required to restore other work because of either cutting or other damage inflicted during the installation of electrical work, engage the original Installer to complete the patching of the other work. Restore the other work in every respect, including the elimination of visual defects in exposed finished, and judged by the Architect.

Excavating For Electrical Work:

A. The work of this article is defined to include whatever excavating and backfilling in the same area, including dewatering, flood protection provisions and other temporary facilities. Coordinate the work with other work in the same area, including other underground services (existing and new), landscape development, paving, and floor slab on grade. Coordinate with weather conditions and provide temporary facilities needed for protection and proper performance of excavating and backfilling.

Concrete for Electrical Work:

A. The work of this article is defined to include whatever concrete work in necessary or shown specifically to install the electrical work; but excluding equipment base grouting (see applicable Division 26 sections). Coordinate the work with other work, particularly other concrete work and accessories.

B. Except as otherwise indicated, comply with applicable provisions of Division 03 sections for electrical work concrete, including form work, reinforcement, mix design, materials (If not noted on drawings, use mix designs and materials accepted for Division 03 work where possible), admixtures, accessories (including water stops), placing of wet concrete, finishing, curing, protecting, testing, submittal and other requirements of the concrete work. Refer instances of uncertain applicability to the Architect/Engineer for resolution before proceeding.

Electrical Work Closeout:

A. Refer to the Division 01 sections for general closeout requirements. Upon completion of the work, the various systems operated under load conditions shall be tested for short circuits and grounds in accordance with the method and resistance values outlined in the National Electrical Code and for load balance on feeders and branch circuits.

B. The complete system shall operate satisfactorily in every respect. Make any repairs or adjustments necessary to this end to the satisfaction of the Architect/Engineer. Furnish all instruments and labor for testing

C. Coordinate closeout operations with closeout of mechanical systems and other power consuming equipment. Accurately record on "as-built" drawings locations of all conduits which are underground or otherwise concealed. Test run electrical equipment in coordination with test runs of mechanical system. Clean and lubricate operational equipment. Instruct Owner's operating personnel thoroughly in the operation, sequencing, maintenance and safety/emergency provision of the electrical systems. Turn over the operations to the Owner's personnel at the time(s) of substantial completion. Until the time of final acceptance of the total work of the Contract, respond promptly with consultation and services to assist the Owner's personnel with operation of the electrical systems.

D. It shall be the responsibility of this contractor to verify electrical characteristics and horsepower of mechanical equipment supplied at job site with that shown on Drawings. In the event that the Mechanical and/or Plumbing contractor furnish equipment of different horsepower and/or electrical characteristics from that shown on the Drawings, he shall pay ALL costs required to furnish the proper electrical facilities.

Notification of Discrepancies:

A. This Contractor shall study the Drawings and compare the layout of the electrical system, program and clock system, telephone system and integrated communication system to determine that:

1. The system covers the units and is required, from a functional, as well as a Code point of view. No area of coverage has been omitted.
2. The system has the appropriate conductors, pairs or cables in the appropriate raceway, connected to the end devices and interconnections to other systems has been shown. Raceway is of adequate size to contain conductors or cables.
3. The system apparatus required to perform the function has been specified.
4. Discrepancies in description of equipment or materials shown on the Drawings or described in the Specifications are brought to the attention of the Architect/Engineer.

B. This Contractor shall notify the Architect/Engineer 14 WORKING DAYS prior to Bid Opening of any discrepancies he has found. In the event this Contractor fails to notify the Architect/Engineer, it will be assumed any and all discrepancies have been found by this Contractor and he has included sufficient money in his bid to correct them.

Guarantee:

A. The work to be performed shall be guaranteed for a period of one year after final acceptance against faulty workmanship and/or materials, and any failure or trouble due to such causes within the period of guarantee shall be made good upon demand of the Owner and without cost to the owner.

Miscellaneous Items:

A. Miscellaneous items not covered in these specifications shall be as indicated on the drawings, installed and connected in the proper method and as recommended by the manufacturer.

END OF SECTION 26 05 00

SECTION 26 05 03 - EQUIPMENT WIRING CONNECTIONS

PART 1 - GENERAL

Related Documents:

A. Drawings and general provisions of contract, including General and Supplementary Conditions and Division-01 Specification sections, apply to work of this section.

B. This section is a Division-26 basic Materials and Methods section, and is part of each Division-26 section making reference to electrical connections specified herein.

Description of Work:

A. Extent of electrical connections for equipment indicated by drawings and schedules. Electrical connections are hereby defined to include, but not necessarily be limited to, connections for providing electrical power to equipment.

B. Types of electrical connections specified in this section include the following:

To motors
To motor starters
From motor starters to motors
To lighting fixtures

C. Motor starters and controls not furnished integrally with equipment are specified in applicable Division-26 sections.

D. Refer to other Division-26 section for junction boxes and disconnect switches required for motors and other electrical units of equipment; not work of this section.

E. Temperature Controls for Heating, Ventilating and Air Conditioning shall be done under Division-23 Specifications.

F. Low voltage thermostat wiring shall be done under Division 23; this Contractor shall furnish empty conduit with pull string only.

G. High voltage (line) thermostat wiring shall be #12 THHN (if applicable), unless otherwise noted on Drawings. Number of conductors to each thermostat shall be as shown on Drawings; as indicated by number of hachure marks. Where no hachure marks are shown, a minimum of 2 conductors shall be assumed. This Contractor shall verify number of conductors required with Division 23 Specifications, Mechanical drawings, Mechanical schedules and equipment wiring diagrams.

Quality Assurance:

A. Comply with applicable portions of NEC as to type of products used and installation of electrical power connections (Terminals and splices), junction boxes, motor starters, and disconnect switches.

B. Comply with applicable portions of NEMA standards pertaining to electrical connections for equipment.

C. Comply with applicable ANSI standards pertaining to products and installation of electrical connections.

D. Provide electrical connection products and materials which have been listed and labeled by the

Underwriters Laboratories.

PART 2. PRODUCTS

Materials and Components:

A. For each electrical connection indicated, provide a complete assembly of materials, including but not necessarily limited to, pressure connectors, terminal (lugs), electrical insulating tape, electrical solder, electrical soldering flux, heat-shrinkable insulating tubing, cable ties, solderless wire nuts, and other items and accessories as need to complete splices and terminations of the type indicated.

Metal Conduit, Tubing and Fittings:

A. Provide metal conduit, tubing and fittings of the types, grades, sizes and weights (wall thicknesses) indicated for each type service. Where types and grades are not indicated, provide proper selection as determined by Installer to fulfill wiring requirements; comply with NEC requirements for raceways. Provide products complying with Division-26 basic materials and methods section "Electrical Raceways", and in accordance with the following listing of metal conduit, tubing and fittings.

Rigid non-metallic conduit
Rigid steel conduit
Rigid metal conduit fittings
Electrical metallic tubing
EMT fittings
Flexible metal conduit
Flexible metal conduit fittings
Liquid-tight flexible metal conduit
Liquid-tight flexible metal conduit fittings
PVC covered rigid metal conduit
PVC covered rigid metal conduit fittings

A. Provide full length pull wire in ALL empty conduits to facilitate the future installation of conductors.

Wire, Cable and Connectors:

A. Provide wires, cables and connectors complying with Division-26 basic materials and methods section "Wires and Cables".

B. Unless otherwise indicated, provide wires/conductors for electrical connections which match wires/ conductors of wiring supplying power.

C. Provide electrical connectors and terminals as recommended by connector and terminal manufacturer for intended application.

Electrical Connection Accessories

A. Provide electrical insulating tape, heat-shrinkable insulating tubing and bolts, solder, electrical soldering flux, wire nuts and cable ties as recommended for use by accessories manufacturers for type services indicated.

PART 3 EXECUTIONS

Installation of Electrical Connections:

A. Install electrical connections as indicated; in accordance with connector manufacturer's written instructions and with recognized industry practices, and complying with requirements of NEC and NECA's "Standard of Installation" to ensure that products fulfill requirements.

B. Connect electrical power supply conductors to equipment in accordance with equipment manufacturer's written instructions and wiring diagrams. Wherever possible, mate and match conductors of electrical connection for proper interface between electrical power supplies and installed equipment.

C. Cover splices with electrical insulation equivalent to, or of a higher rating than, insulation on the conductors being spliced.

D. Prepare cables and wires, by cutting and stripping covering, armor, jacket and insulation properly to ensure a uniform and neat appearance where cables and wires are terminated.

E. Trim cables and wires as short as practicable and arrange routing to facilitate inspection, testing and maintenance.

F. Tighten wire-binding connector screws firmly.

G. Provide liquid-tight flexible metal conduit for connection of all motors.

H. Coordinate insulation of electrical connections for equipment with equipment installation.

I. Perform all work in conformance with job requirements, other applicable sections of these specifications, governing
Codes and ordinances, and manufacture's instructions.

J. If the Mechanical and/or Plumbing Contractor furnishes equipment with horsepowers or electrical characteristics different from that shown on the drawings, he shall pay all costs required to furnish the proper electrical facilities.

K. Motor starters and motor control devices that are not an integral part of the mechanical equipment will be turned over to this contractor for installation and connection.

Electrical Equipment Identification:

A. All items of mechanical and electrical equipment shall be identified by the attachment of engraved nameplates constructed from laminated phenolic plastic, at least 3/64" thick, 3-ply, black surfaces and white core. Engraving shall be Roman Gothic, at least 3/8" high appropriately spaced.

B. Nameplates shall be attached by the use of #2 chromium plated, self-tapping, flat head Phillips screws, no rivets or adhesives. Nomenclature on the label shall include the name of the item, its make number, area, space, or equipment served, and other pertinent information. Equipment to be identified with nameplate shall include, but not be limited to, the following.

Air Conditioning Controls	Contractors
Individually Enclosed C.B.'s	Relays
Panelboards	Disconnect Switches
Motor Control Centers	Switchboards
Starters	Low Voltage Relay Panels

C. Nameplates for panelboards, motor control centers and switchboards shall be furnished and installed at factory by manufacturer of equipment. Refer to respective Division-26 sections for additional nameplate requirements.

D. Air washer and exhaust fan disconnect switches shall have engraved nameplates, screwed to the outside cover of disconnect, with mechanical designation and room number served by the unit, (i.e., "EF-1, GYM-101"). Room numbers shall be those finally selected by the Owner; not necessarily those shown on the Contract Documents.

E. Complete all identification cards (directories) for switches, starters, and other devices in all distribution, lighting and applicable panelboards and similar pieces of equipment, on a typewriter in a neat manner and insert the card in the card holder behind a piece of clear plastic. Where the card size is insufficient for the proper identification of all circuits, the index shall be made on a large sheet of paper of proper proportion, and then photo-reduced to fit the card holder.

F. Remote light switches and all control and equipment switches (i.e., exhaust fans, etc.) shall be identified by ENGRAVING the switchplate and NOT by micarta nameplate. Plates shall be stainless steel as hereinafter specified. Engraving shall be 3/16" Roman gothic, and shall be filled with black enamel. Nomenclature shall include the area, control, or equipment served.

END OF SECTION 26 05 03

SECTION 26 05 19 – LOW-VOLTAGE ELECTRICAL POWER CONDUCTORS AND CABLES

PART 1 - GENERAL

Related Documents:

A. Drawings and general provisions of Contract, including General and Supplementary Conditions and Division-01 Specifications sections apply to work of this section.

Description of Work:

A. The extent of electrical cable and electrical wire work is indicated by drawings and schedules.

B. The applications for cable, wire and connectors required on the project as follows:

Power and lighting distribution circuitry
Equipment connections and control circuitry
Fire Alarm System circuitry
Public Address circuitry
Program and Clock circuitry

Quality Assurance:

A. Comply with National Electrical Code (NFPA 70), latest edition, as applicable to construction and installation of electrical cable, wire and connectors.

B. Provide electrical cable, wire and connectors which have been listed and labeled by Underwriters Laboratories.

C. Comply with applicable portions of NEMA/Insulated Power Cable Engineers Association standards pertaining to materials, construction and testing wire cable.

D. Comply with applicable portions of ANSI/ASTM standards pertaining to construction of wire and cable.

E. Comply with applicable portions of IEEE standards pertaining to construction of wire and cable.

Submittal:

A. Submit manufacturer's data on electrical cable, wire and connectors when requested by the Engineer and/or Architect. Refer to Section 26 05 00 for additional requirement on product data submittal.

PART 2 PRODUCTS

Cable, Wire and Connectors:

A. Except as otherwise indicated, provide cable, wire and connectors of manufacturer standard materials, as indicated by published product information; designed and constructed as recommended by the manufacturer, and as required for the installation.

WIRE:

B. Provide factory-fabricated wire of the size, rating, materials and type as indicated for each service. Where not indicated, provide proper selection as determined by Installer to comply with

installation requirements and with NEC Standards. Select from only the following types, materials, conductor configurations, insulations, and covering:

UL Type: THW
UL Type: THHN/THWN (dual rated)
UL Type: THWN

Material: Copper

Conductors: Solid (AWG 20 to 10 only)
Conductors: Concentric-lay-stranded (standard flexibility)

CABLE:

A. Provide factory-fabricated cable of sizes, ratings, materials and jacketing/sheating as indicated for each type service. Where not indicated, provide proper selection as determined by installer to comply with installation requirements and with NEC Standards.

B. Conductors #6 AWG and larger shall by type THW or THWN. Conductors #8 and smaller shall be type THHN/THWN. Except that #14 AWG for class 2 remote control and signal circuits may be commercial fixture wire type RF-2 or TF. Conductors shall be 98% conductivity, copper. Insulation types THW, THHN/THWN #2 AWG and smaller, for the purpose of this specification shall have a capacity of the same size wire with 60 degrees Celsius insulation.

C. All wire on this project shall be new, unused, in good condition and shall be delivered in standard coils, packages and reels. Samples of all wire shall be submitted by the Contractor when so requested by the Owner’s duly authorized representative for the purpose of determining acceptability of the wire. Wire which has been rejected by the Owner or Owner's representative shall not be used again. Such rejected wire shall be removed from the Owner's premises forthwith. Decision as to the quality of the wire furnished and the acceptance of such wire shall be made by the Owner's duly authorized representative.

D. No conductor smaller than #12 wires shall be used for lighting purposes. In the case of "homeruns", no conductor smaller than a #10 wire shall be used for runs over 50 feet in length on 120v circuits.

E. The sizing of all wire, except remote-control wire, shall be accomplished in the case of both feeder and branch circuits by conforming to the following provisions:

F. The voltage drop in the case of 120/208 volts shall not exceed 3.0% at maximum load and 80.0% power factor. Service and feeder shall not exceed 1.0% voltage drop at maximum load and 85% power factor, iron conduit only considered.

G. Conductors of #10 and smaller sizes of wire shall be solid members unless otherwise specifically called for on the plans. Conductors #8 and larger sizes of wire shall be stranded conductors unless otherwise specifically called for on the plans. The color of the wire shall be selected to conform to all instances to the following table:

COLOR-PHASE TABLE FOR WIRE

208 VOLT SYSTEM		480 VOLT SYSTEM	
Neutral White		Neutral Grey	
Phase A	Black	Phase A	Brown
Phase B	Red	Phase B	Orange
Phase C	Blue	Phase C	Yellow

Grounding Conductor - Green Grounding Conductor - Green

H. Should tape be used for color coding, it shall cover not less than 6" of conductor within enclosure wherever possible. Color coding shall be with tape such as that manufactured by the Minnesota Mining and Manufacturing Company for this purpose.

I. Remote-control wires, other than Class-2 Remote Control and Signal circuits, shall be no smaller than #14 conductors. Control wires shall be run in separate conduits.

J. Lighting fixtures shall not be used for raceways for circuit other than parallel wiring of fixtures.

K. When leaving a metal raceway or conduit in a cabinet, box, switch enclosure, control enclosure or any other like member, conductors shall be protected by means of insulated bushings or end fittings.

L. Conductors may be run in multiple size 1/0 to 500 MCM inclusive, provided all multiple conductors are the same size, length and type of insulation. Not more than three conductors may be run in multiple, and they shall be so arranged and terminated as to insure equal division of the total current between all conductors involved. Where multiple connections are contemplated, approval of the Owner's duly representative must be obtained before installation is made.

Connectors:

A. Provide factory-fabricated, metal compression type connectors of sizes, rating, materials, types and classes as indicated for each service. Where not indicated, provide proper selection as determined by Installer to comply with installation requirements and NEC standards. NO SET SCREW CONNECTORS OR COUPLINGS ALLOWED.

B. No splices or taps shall be made in any conductors except in outlet boxes, pullboxes, panelboard boxes, manholes, splice boxes or other exposed locations. All taps and splices shall be made with solderless connections and insulated in a manner providing an effective insulation equal to that of the adjoining wire. Any splice or tap shall be made only on such conductors as are a component part of a single circuit.

PART 3 EXECUTION

Installer:

A. Install electrical cables, wires and connectors as indicated, in compliance with the manufacturer's written instructions, applicable requirements of the NEC and NECA's "Standard of Installation", and in accordance with recognized industry practices.

B. Coordinate cable and wire installation work with electrical raceway and equipment installation work, as necessary for proper interface. Prior to pulling cables or conductors into raceways, inspect interiors of raceways; remove burrs, dirt and construction debris.

C. Pull conductors together where more than one is being installed in a raceway. Care shall be exercised while installing wire in conduits so as not to injure conductor insulation. Bending radius of insulated wire or cable shall not exceed manufacturer's recommended values.

D. Use pulling compound or lubricant, when necessary; compound must not deteriorate conductor and insulation, and shall be U.L. listed.

E. Use pulling means, including fish tape, cable or rope which can not damage the raceway. Maximum pulling tension of any wire or cable shall not exceed manufacturer's recommended values.

F. Keep conductor splices to a minimum. Splices shall not be permitted except in junction boxes, outlet boxes or as previously listed in this section. Splices must be accessible.

H. Install splices and taps which have mechanical strength and insulation rating equivalent-or-better than conductor.

I. Use splice and tap conductors which are compatible with the conductor material.

J. Provide nylon pull wire for every empty raceway to facilitate the future installation of wires.

Field Quality Control:

A. Prior to energization, test cable and wire for continuity of circuitry and also for short circuits. Correct malfunction when detected.

B. Subsequent to wire and cable hook-ups, energize circuitry and demonstrate functioning in accordance with requirements.

END OF SECTION 26 05 19

SECTION 26 05 33 – RACEWAY AND BOXES FOR ELECTRICAL SYSTEMS

PART 1 GENERAL

Related Documents:

A. Drawings and general provisions of Contract, including General and Supplementary Condition and Division-01 Specification Sections, apply to work of this section.

B. This section is a Division-26 Basic Materials and Methods Section, and is part of each Division-26 section making reference to electrical raceways specified herein.

Description of Work:

A. The extent of raceways is indicated by drawings and schedules.

B. The types of raceways in this section include the following:

Electrical metallic tubing
Flexible metal conduit
Intermediate metal conduit
Liquid-Tight flexible metal
Rigid metal conduit
Underground plastic utilities duct
Quality Assurance:

B. Comply with applicable portions of NEMA standards pertaining to raceways.

C. Comply with applicable portions of UL safety standards pertaining to electrical raceway systems; and provide products and components which have been UL-listed and labeled.

D. Comply with NEC requirements as applicable to construction and installation of raceway systems.

Submittal:

A. Submit manufacturer's data on electrical raceways when requested by Engineer and/or Architect. Refer to Section 26 05 00 for additional requirements of product data submittal.

Product Delivery, Storage and Handling:

A. Provide color-coded end cap thread protectors on exposed threads of metal conduit.

B. Handle conduit and tubing carefully to prevent bending and end-damage, and to avoid scoring finish.

C. Store pipe and tubing inside and protect from weather. When necessary to store outdoors, elevate well above grade and enclose with durable watertight wrapping.

PART 2 PRODUCTS

Materials and Components:

A. For each electrical raceway system indicated, provide assembly of conduit, tubing or duct and fittings including but not necessarily limited to connectors, couplings, offsets, elbows, strap,

bushings, expansion joints, hangers and other components and accessories as needed for a complete system.

B. Each length of rigid conduit shall have both ends threaded. The extremities shall be reamed to remove all burrs and sharp edges. Each length of conduit shall be marked with the name and trademark of the manufacturer and the stamp of approval of the Underwriters Laboratories, Inc.

C. Each length of conduit shall be provided with one coupling attached and the threads of the end of the conduits having no coupling shall be protected by use of suitable thread protectors. All couplings and other fittings such as bends or elbows shall be protected against corrosion in the same manner in which the conduit itself is protected. All bends for conduit of 1-1/4" or larger shall either be factory manufactured elbows or be made by the use of a bending machine meeting the approval of the Owner's duly authorized representative. Under no circumstances shall any bend be installed if the conduit from which it is fabricated is injured in any manner in the course of, or by, the bending process. The radius of the curve of the inner edge of any field bend shall not be less than the recommendation of the National Electrical Code. Under no circumstances shall the internal cross section area of any conduit be appreciably reduced by any bending process.

D. EMT connectors and couplings shall be of the watertight threaded compression type, having steel gland nuts. Indenter or threadless type fittings are prohibited. NO SET SCREW CONNECTORS OR COUPLINGS ALLOWED.

E. Conduits 1/2" and 3/4" trade size may be installed in concrete slabs, or near to the center of the slab as possible.

F. Conduits installed in direct contact with the earth, except where PVC is indicated and/or specified shall be rigid galvanized steel, field spirally wrapped (half-lapped) with one layer of 1" wide 3M Scotchrap #50 plastic tape with a 50% overlap, including all joints or couplings, or shall be coated with a bonded, 20 mil minimum thickness PVC, permanently fused at the factory, Pittsburgh Standard Co., "Plasti-Bond", or approved equal. At Contractor's option PVC externally coated rigid steel conduit may be used without spiral wrap.

G. On all circuit conduits, 1/2" to 6", this contractor shall use O.S. Electrical Manufacturing Co. Type IBC-L-BC insulated conduit bushings for all conductors #6 and up where they enter or leave the cabinet box.

H. Where thin wall conduit is terminated into cabinet, junction box, outlet box, pull box, auxiliary gutter, etc., the conduit shall be secured with a nylon insulated throat compression type box connector. All thin wall conduit couplings shall be compression type only.

I. Ground clamps shall be provided on conduits stubbed up into the motor control center, panel board or switchboard and all conduits connected to the ground bus.

Metal Conduit, Tubing and Fittings:

A. Provide metal conduit, tubing and fittings of types, grades, sizes and weights (wall thickness) for each service indicated. Where types and grades are not indicated, provide proper selection determined by Installer to fulfill wiring requirements and comply with applicable portions of NEC for raceways.

B. Rigid Steel Conduit: FS WW-CO581 and ANSI C80.1.

C. Intermediate Steel Conduit: FS WW-C-581.

D. PVC Externally Coated Rigid Steel Conduit: ANSI C80.1 and NEMA std. Pub. No. RN 1.

E. Rigid Metal Conduit Fittings: FS W-F-408, types, kinds and styles as indicated.

F. EMT: FS WW-C 563 and ANSI C80.3.

G. EMT Fittings: FS W-F-408; types, classes and kinds as indicated.

H. Flexible Metal Conduit: FS WW-C-566, Type II, zinc coated steel. Aluminum, Type I, not acceptable.

I. Flexible Metal Conduit Fittings: FS WW-F-406; Types 1, Class 1

STYLE A

A. Liquid-tight Flexible Metal Conduit: Provide liquid-tight flexible metal conduit; constructed of single strip, flexible, continuous, interlocked and double-wrapped steel; galvanized inside and outside; coat with liquid-tight jacket of flexible polyvinyl chloride (PVC). SHALL NOT be used for outdoor installations.

B. Liquid-tight Flexible Metal Conduit Fittings: FS W-F-406; Type 1, Class 3, Style G.

C. Non-metallic Conduit, Ducts and Fittings:

D. Provide non-metallic conduit, ducts and fittings of types, sizes and weights (wall thicknesses) for each service allowed. Where types are not indicated, provide proper selection determined by the Installer to fulfill the wiring requirements and comply with applicable portions of NEC for raceways.

E. PVC Conduit and tubing Fittings: NEMA stds. No. TC 2 PVC Schedule 40 minimum.

F. Underground PVC Plastic Utilities Duct: Not Permitted.

G. Liquid-tight Flexible Nonmetallic Conduit: Not Permitted.

PART 3 EXECUTION

Installation:

A. Install electrical raceways where indicated, in accordance with manufacturer's written instruction, applicable requirements of NEC and NECA "Standard of Installation" and complying with recognized industry practices.

B. Coordinate with other work including metal and concrete deck work, as necessary to interface installation of electrical raceways and components.

C. Conduit shall be provided for all wiring circuits as indicated. Material shall be exposed or concealed as required by the Drawings. Exposed conduit shall be run straight and true to building lines. All conduits shall be rigidly supported by means of straps or hangers best suited for work. If ceiling support system is adequate, one 3/4" maximum conduit may be supported by a Caddy clip to hanger wire. Multiple runs of conduits shall be racked on trapeze hangers. All support materials shall be rust-proof. Perforated tape or wire shall not be used. DO NOT USE WIRE TO SUPPORT OR ANCHOR ANY CONDUIT.

D. All ends of the conduit shall be properly reamed to remove rough edges and whenever a conduit enters a box or other fitting, it shall be securely fastened by the use of a locknut inside and outside of the box or fittings. An approve bushing shall be installed on the ends of all conduit in

such a manner as to protect the wire from abrasion. The Contractor shall so lay out and install the conduit systems as to avoid all other services or systems, the proximity of which may prove injurious to the conduit or conductors which it confines. All conduit systems except those otherwise specifically shown to the contrary, shall be concealed in the building construction.

E. The contractor shall run all conduits in a manner satisfactory to the Owner's duly representative. On exposed systems, support shall be provided at intervals of 6 feet. On concealed circuits, support shall be provided at intervals of no more than 8 feet. No feeder conduit run shall be longer than 80 feet between junction boxes, cabinets or circuit interrupting devices unless there are no direction changes and only a straight-in-line pull of wire is involved. In such straight-in-line runs between junction boxes, cabinets or circuit interrupting devices, a run not to exceed 100 feet in length may be made.

F. Boxes shall be square and flush with finished surfaces and suitable anchored in place.

G. Conduit installation shall be in strict accordance with the NEC and best current practice. Conduit system shall be complete from pull to point to pull point before wire is pulled in it. Upon completion of installation of raceways, inspect interiors of raceways; remove burrs, dirt and construction debris.

H. Conduit crushed or otherwise deformed shall not be installed and shall be removed from the job site without delay.

I. Conduit runs shall be sealed after installation to prevent accumulation of water, dirt and other foreign materials. Conduit in which such accumulation of water, dirt and other foreign materials. Conduit in which such accumulation occurs shall be cleaned to the satisfaction of the Owner's representative or replaced.

J. Conduit crossing expansion joints shall be provided with suitable expansion fitting. Exposed conduits below the five (5) foot level shall be galvanized rigid conduit.

K. Conduits exposed on room or other exterior (outdoor) locations, not in direct contact with earth, shall be galvanized rigid steel or IMC.

L. EMT Steel tube may be used in sizes up to and including 2" in all interior work, except that it SHALL NOT be used in concrete, underground, underfloor, in any damp or outdoor locations, or in any location where there is a likelihood of mechanical injury.

M. Provide liquid-tight flexible metal conduit for all motor connections. Liquid tight flexible metal conduit SHALL NOT be used for outdoor installations.

N. Flexible metal conduit shall be used ONLY for tap connections to lay-in lighting fixtures and in accordance with NEC Article 410-117 (c).

O. Conduits routed above the acoustical "lay-in" ceilings shall be anchored to the building structure and not on the ceiling. Wire shall not be used to anchor boxes to structure. Junction boxes shall be installed on the structural members. Flexible metal conduits extended down to light fixtures from junction boxes shall not exceed 6 ft. length and be in accordance with NEC Article 410-117 (c). Flexible metal conduit shall be strapped and/or supported such that it not lay atop acoustical lay-in ceiling tile.

P. The Contractor shall so lay out and install conduit runs as to avoid close proximity to hot water pipes. In no case shall a conduit be run within 3" of such pipes, except where crossings are unavoidable and then the conduit shall be kept at least 1" from the covering on the pipe crossed. Wherever possible, install horizontal raceway runs and above water and steam piping.

Q. The Contractor shall furnish and install a full length nylon pull cord in EVERY empty conduit installed hereunder to facilitate the future installation of wires. Identify each terminus of pull wire and linen tags and with complete information as to service and location of terminus of the cord.

R. Steel conduit may be embedded in concrete providing the outside diameter does not exceed 1/3 the thickness of the concrete lab, wall or beam is located entirely within the center third of the member and the lateral spacing of conduits is not less than 3 diameters.

S. Non-metallic conduit or duct may be used for underground branch circuits, underground feeders or underground service conduits only. Non-metallic conduit when installed outside of building foundation shall be buried 24" below ground. When non-metallic conduit is extended underneath building foundation concrete encasement is not required and conduit shall be buried 18" below foundation. BEFORE STUBBING UP, ADAPT TO GALVANIZED RIGID ELBOWS. Elbows shall be wrapped as indicated under MATERIALS AND COMPONENTS.

T. Non-metallic conduit is not permitted above grade or finished floor.

U. Contractor shall furnish and install a ground bonding conductor as required by NEC. This Contractor shall size the ground conductor as per NEC Art. 250 taking voltage drop into consideration. The addition of the grounding conductor may require an increase in conduit size and conduit fill shall be computed using the appropriate NEC tables. This Contractor shall submit recalculated branch, feeder or service conduit, taking the additional ground conductor into account, to the Engineer for approval.

V. All non-metallic conduit or duct runs, whether shown on the Drawings or not, shall have a ground bonding conductor, size as noted and/or as required by the NEC. The bond or equipment served shall be grounded to a grounding conductor to provide a good return path to service panel.

W. This contractor shall be responsible for sealing all new conduit penetrations, through new and existing walls, ceiling or floors. The seal shall be acceptable to Architect/Engineer and maintain the integrity of the wall, ceiling or floor fire rating. 3M brand fire barrier caulk #CP-25 and putty #303 are considered acceptable for this purpose.

X. All roof penetrations shall be done using "portal-plus" pre-molded flexible boot flashing.

END OF SECTION 26 05 33

SECTION 26 05 34 - OUTLET, JUNCTION, AND PULL BOXES

PART 1 - GENERAL

Related Documents:

A. Drawings and general provisions of Contract, including General and Supplementary Conditions and Division-01 Specification sections, apply to work of this section.

B. This section is a Division-26 Basic Materials and Methods section, and is a part of each Division-26 section making reference to electrical wiring boxes and fittings specified herein.

Description of Work:

A. Extent of electrical box and electrical fitting work is indicated by drawings and in schedules.

B. The types of electrical box and electrical fitting work is indicated by drawings and in schedules.

C. The types of electrical boxes and fittings in this section include the following:

Outlet boxes
Junction boxes
Pullboxes
Conduit bodies
Bushings
Locknuts

Quality Assurance:

A. Comply with NEC as applicable to construction and installation of electrical boxes and fittings.

B. Provide electrical boxes and fittings which have been UL listed and labeled.

C. Comply with ANSI C134.1 (NEMA Standards Pub. No. OS 1) as applicable to sheet-steel outlets boxes, device boxes, covers and box supports.

PART 2 - PRODUCTS

Fabricated Materials:

A. Provide galvanized flat rolled sheet steel interior outlet wiring boxes of types, shapes and sizes including box depths to suit each respective location and installation; construct with stamped knockouts in back and sides and with threaded screw holes with corrosion-resistant screws for securing box covers and wiring devices.

B. Provide outlet box accessories as required for each installation, including mounting brackets, wallboard hangers, extension rings, fixture studs, cable clamps and metal straps for supporting outlet boxes which are compatible with outlet boxes being used and fulfilling requirements of individual wiring situations. Choice of accessories is Installer's option.

C. In standard partitions and suspended ceilings four inch octagonal boxes shall be 2-1/8" deep:

Appleton #40D1/2 (Universal 54171-1/2), 4" Oct. x 2-1/8" Deep, four 1/2" K.O.'s in sides, five 1/2" K.O.'s in top.

Appleton #40DSPL (Universal 54171 SPL), 4" oct. x 2-1/8" Deep, two 1/2" K.O.'s and two 3/4" K.O.'s in sides, three 1/2" K.O.'s and two 3/4" K.O.'s in top.

Appleton #40D3/4 (Universal 54171-3/4), 4" Oct. x 2-1/8" Deep four 3/4" K.O.'s in sides, three 1/2" K.O.'s and two 3/4" K.O.'s in top.

D. In standard partitions and suspended ceilings where conduits of greater size than 3/4" are employed boxes shall be 4" square, 1-1/2" deep:

Appleton #4SDI (Universal 53171-1) 4" Sq. x 2-1/8" Deep, Eight 1" K.O.'s in sides, three 1/2" & two 3/4" K.O.'s in top.

E. In thin partitions measuring 3-1/2" or less, boxes shall be 4" square, 1-1/2" deep:
Appleton #4S3/4 (Universal 5251-3/4), 4" sq. x 1-1/2" deep, Eight 3/4" K.O.'s in sides, three 2" and two 3/4" in top.

F. All wall or bracket outlets using octagon boxes shall be equipped with 3/8" no-bolt fixture stud.

G. Switch and outlet boxes shall use the same size boxes as specified above. Provide boxes with the appropriate covers and with required "raise" to finish flush with surface.

H. The following requirements shall apply to exposed as well as concealed conduit systems. When "gang" arrangements of outlets are employed 2-3/4" deep "gang" boxes shall be used. These "gang" boxes shall have dimensions which are not smaller than those shown in the following table.

NUMBER IN GANG	SIZE
3	4 - 1/2" x 8 -5/8"
4	4 - 1/2" x 10 -1/2"
5	4 - 1/2" x 12 -1/4"
6	4 - 1/2" x 14"
7	4 - 1/2" x 16"
8	4 - 1/2" x 17 -3/4"

I. Where "gang" boxes are located in woodwork or in wooden partitions, the depth of the boxes shall be reduced to 1 - 3/4".

J. Provide corrosion-resistant cast metal weatherproof outlet wiring boxes of types, shapes and sizes, including depth of boxes with threaded conduit ends, cast metal face plates with spring-hinged waterproof caps suitably configured for each application, including face plate gaskets and corrosion-resistant fasteners.

K. Provide galvanized code gauge sheet steel junction and pull boxes with screw-on covers; of types, shapes and sizes to suit each respective location and installation; with welded seams and equipped with stainless steel nuts, bolts, screws and washers. Outdoor pullboxes shall be cast iron NEMA 4.

L. Provide galvanized cast-metal conduit bodies of types, shapes and sizes, to suite respective locations and installation, construct with threaded-conduit-entrance ends, removable covers and corrosion-resistant screws.

M. Provide corrosion-resistant punched-steel box knockout closures, conduit locknuts, conduit bushings, and offset connectors of types and sizes to suit respective uses and/or installation. Provide conduit bushings and connectors as specified under Section 26 05 33 Raceway and boxes for Electrical System.

PART 3- EXECUTION

Installation of Boxes and Fittings:

A. Install electrical boxes and fittings where indicated, complying with manufacturer written instructions, applicable requirements of NEC and NECA's "Standard of Installation" and in compliance with recognized industry practices to ensure that products fulfill requirements.

B. Coordinate installation of electrical boxes and fittings with wire/cable and raceway installation work.

C. Special Systems Junction Boxes shall be painted in the following color scheme for easier identification during construction and inspections (if applicable):

Red - Fire Alarm System
Blue - P.A. System
Yellow - Program and clock System

D. Provide weatherproof outlets for interior and exterior locations exposed to weather or moisture. Provide knockout closures to cap unused knockout holes where blanks have been removed.

E. Install boxes and conduit bodies so as to ensure ready accessibility of electrical wiring. Avoid using round boxes where conduit must enter box through side of box which would result in difficult and insecure connections when fastened with locknut or bushing on rounded surface. Fasten boxes rigidly to substrates or structural surfaces to which attached or solidly embed electrical boxes in concrete or masonry. Wire shall not be used to anchor boxes to structure. Provide electrical connections for installed boxes.

END OF SECTION 26 05 34

SECTION 26 09 23 - LIGHTING CONTROL DEVICES - OCCUPANCY SENSORS

PART 1- GENERAL

WORK INCLUDED

A. Contractor's work to include all labor, materials, tools, appliances, control hardware, sensor, wire, junction boxes and equipment necessary for and incidental to the delivery, installation and furnishing of a completely operational occupancy sensor lighting control system, as described herein.

B. Contractor/Supplier shall examine all general specification provisions and drawings for related electrical work required as work under Division 26.

C. Contractor shall coordinate all work described in this section with all other applicable plans and specifications, including but not limited to wiring, conduit, fixtures, HVAC systems and building management systems.

D. The general provisions of the contract, including General and Supplementary conditions and General Requirements, apply to work specified in this section.

EQUIPMENT QUALIFICATION

A. Products supplied shall be from a single manufacturer that has been continuously involved in manufacturing of occupancy sensors for a minimum of five (5) years. Mixing of manufacturers shall not be allowed, unless approve by engineer.

B. All components shall be U.L listed, offer a five (5) year warranty and meet all state and local applicable code requirements.

C. Wall switch products must be capable of withstanding the effects of inrush current. Submittals shall clearly indicate the method used.

SYSTEM DESCRIPTION

A. The objective of this section is to ensure the proper installation of the occupancy sensor based lighting control system so that lighting is turned off automatically after reasonable time delay when a room or area is vacated by the last person to occupy said room or area.

B. The occupancy sensor based lighting control shall accommodate all conditions of space utilization and all irregular work hours and habits.

C. Contractor shall warrant all equipment furnished in accordance to this specification to be undamaged, free of defects in materials and workmanship, and in conformance with specifications. The supplier's obligation shall include repair or replacement, and testing without charge to the owner, all or any parts of equipment which are found to be damaged, defective or non-conforming and returned to the supplier The warranty shall commence upon the owner's acceptance of the project Warranty on labor shall be for a minimum period of one (1) year.

SUBMITIALS

A. Manufacturer shall substantiate conformance to this specification by supplying the necessary documents, performance data and wiring diagrams. Any deviations to this specification must be clearly stated by letter and submitted.

B. Submit a lighting plan clearly marked by manufacturer showing proper product, location and orientation of each sensor.

C. Submit any interconnection diagrams per major subsystem showing proper wiring.

D. Submit standard catalog literature which includes performance specifications indicating compliance to the specification.

E. Catalog sheets must clearly state any load restrictions when used with electronic ballasts.

SYSTEM OPERATION

A. It shall be the contractor's responsibility to make all proper adjustments to assure owner's satisfaction with the occupancy system.

PART 2 - SPECIFIC REQUIREMENTS

ACCEPTABLE MANUFACTURERS

A. Hubbell Building Automation
Wattstopper
Leviton

B. The listing of any manufacturer as "acceptable" does not imply automatic approval. It is the sole responsibility of the electrical contractor to ensure that any price quotations received and submittals made are for sensors which meet or exceed the specifications included herein.

PRODUCT SUBSTITUTION:

A. Manufacturer's catalog numbers are specified for the purpose of establishing a standard. Substitutions for electrical equipment, will be permitted, if submitted in writing, 14 days prior to the Bidding Date, for approval by the Architect/Engineer, as being equal to, or better than, the specified items in every respect. Occupancy sensors may have substitutions only in equal appearance, quality and function to, or better than, the specified item. Complete descriptive and technical data shall be submitted on all proposed substitute items, together with the same data on the specified items. Material samples of the proposed substitute item and the specified items shall be submitted for comparison and test if requested by the Architect/Engineer.

B. All requests for substitution of equipment shall be made in writing to the Architect no less than 14 days prior to bidding date, by each individual bidder, with the certification that the "substitute item" is equal in appearance, quality and function or better than the specified item in every detail. The certification shall be signed by the individual holding the Master Electricians' License.

C. If notice of approval has NOT been published by the bid date, the request for substitution is disapproved.

PRODUCTS

A. All products shall be Hubbell Building Automation product numbers:

1. Ceiling sensors: LO DT, OMNI DT 2000 BP1277, OMNI DT 1000 BP1277, OMNI DT 500 BP1277.
2. Wall switches sensors: LH MT D 2, LH MT S 1.
3. Power and Auxiliary Packs: UVPP

B. Wall switch sensors shall be capable of detection of occupancy of major motion up to 1000 square feet at 180 degree coverage area.

C. Wall switch sensors shall accommodate loads from 0 to 1,000 watts, fluorescent, at 120 volts; 0 to 1,800 watts, fluorescent, at 277 volts.

D. Wall switch products shall utilize Zero Arc Point Switching which increases relay life, protects from the effects of inrush current, and increases sensor's longevity.

E. Wall switch sensors shall have no leakage current to load, in manual or in Auto/Off mode for safety purposes and shall have voltage drop protection.

F. Wall switch sensors shall provide a field selectable option to convert sensor operation from automatic-ON to manual-ON.

H. Passive infrared sensors shall provide high immunity to false triggering from RFI (hand-held radios) and EM! (Electrical noise on the line).

J. Passive infrared sensors shall have a multiple segmented Fresnel lens, in a multipletier configuration, with grooves-in to eliminate dust and residue build-up.

K. Where specified, passive infrared ultrasonic and dual technology sensors shall offer daylighting footcandle adjustment control and be able to accommodate dual level lighting.

L. Dual technology sensors shall be wall mounted, corner mounted or ceiling mounted in such a way as to minimize coverage in unwanted areas.

M. Dual technology sensors shall consist of passive infrared and ultrasonic technologies for occupancy detection. Products that react to noise or ambient sound shall not be considered.

N. Ultrasonic sensors shall utilize self adjusting sensibility to adjust the detection threshold dynamically to compensate for constantly changing levels of activity and air flow throughout controlled space.

O. Ultrasonic operating frequency shall be crystal controlled at 25 kHz within ± 0.005% tolerance, 32 kHz within ± 0.002% tolerance, or 40 kHz ± 0.002% tolerance to assure reliable performance and eliminate sensor cross-talk. Sensors using multiple frequencies are not acceptable.

P. All sensors shall be capable of operating normally with LED drivers, electronic ballasts, PL lamp systems and rated motor loads.

Q. Coverage of sensors shall remain constant after sensitivity control has been set. No automatic reduction shall occur in coverage due to the cycling of air conditioner or heating fans.

R. All sensors shall have readily accessible, user adjustable settings for time delay and sensitivity. Settings shall be located on the sensor and shall be recessed to limit tampering.

S. In the event of failure, a bypass manual override shall be provided on each sensor. When bypass is utilized, lighting shall remain on constantly or control shall divert to a wall switch until sensor is replaced. This control shall be recessed to prevent tampering.

T. All sensors shall provide an LED as a visual means of indication at all times to verify that motion is being detected during both testing and normal operation.

PART 3 – EXECUTION

INSTALLATION

A. It shall be the contractor's responsibility to locate and aim sensors in the correct location required for complete and proper volumetric coverage within the range of coverage(s) of controlled areas per the manufacturer's recommendations. Rooms shall have hundred (100) percent coverage to completely cover the controlled area to accommodate all occupancy habits of single or multiple occupants at any location within the room(s). The locations and quantities of sensors shown on the drawings are diagrammatic and indicate only the rooms which are to be provided with sensors. The contractor shall provide additional sensors if required to properly and completely cover the respective room.

B. It is the contractor's responsibility to arrange a pre-installation meeting with manufacturer's factory authorized representative, at owner's facility, to verify placement of sensors and installation criteria.

C. Proper judgment must be exercised in executing the installation so as to ensure the best possible installation in the available space and to overcome local difficulties due to space limitations or interference of structural components. The contractor shall also provide, at the owner's facility, the training necessary to familiarize the owner's personnel with the operation, use, adjustment, and problem solving diagnosis of the occupancy sensing devices and systems.

FACTORY COMMISSIONING

A. Upon completion of the installation, the system shall be completely commissioned by the manufacturer's factory authorized technician who will verify all adjustments and sensor placement to ensure a trouble-free occupancy-based lighting control system. This service is provided at an additional cost.

B. The electrical contractor shall provide both the manufacturer and the electrical engineer with ten working days written notice of the scheduled commissioning date. Upon completion of the system fine tuning the factory authorized technician shall provide the proper training to the owner's personnel in the adjustment and maintenance of the sensors.

END OF SECTION 26 23 13

SECTION 26 22 13-LOW-VOLTAGE DISTRIBUTION TRANSFORMERS TP-1

PART 1 - GENERAL

1.1 SCOPE

A. Furnish and install TP-1 dry type isolation transformers of the types, sizes and quantities indicated on the contract drawings. Provide all lugs, accessories and mounting hardware necessary for proper installation and operation. Transformers manufactured after 2006 shall comply to the Federal Law 10 CFR Part 431 "Energy Efficiency Program for Certain Commercial and Industrial Equipment".

1.2 RELATED DOCUMENTS

A. All drawings and general provisions of the Contract, including General, Supplementary Conditions, special provisions and division 01 specification section, apply to this section.

1.3 SUBMITTALS

A. Provide product information prior to fabrication and installation. Product data shall include all dimensions, weights, electrical ratings, wiring diagrams and required clearances.

B. When requested, provide additional product data and certifications necessary to show conformance with this specification.

C. Provide information for record purposes including field test reports and maintenance data as required.

D. Refer to section 26 05 00 for general requirements on submittals.

1.4 RELATED STANDARDS

A. Provide transformers in accordance with the following standards, where applicable:
1. Underwriter's Laboratory 1561, Standard for Safety for Dry-Type General Purpose and Power Transformers
2. Underwriter's Laboratory 506, Standard for Safety for Specialty Transformers
3. NEMA ST 20, Dry Type Transformers for General Applications
4. NEMA 250, Enclosures for Electrical Equipment (1000 V Max)
5. NEMA TP1 (Guide for determining energy efficiency for distribution transformers)
6. NEMA TP2 (Standard test method for measuring the energy consumption of distribution transformers)
7. NEMA TP3 (Standard for the labeling of distribution transformer
8. ANSI / IEEE C57.12.91, Standard Test Code for Dry-Type Distribution and Power Transformers
9. NFPA 70, National Electrical Code
10. IEEE C2, National Electrical Safety Code

1.5 QUALITY ASSURANCE

A. Manufacturer shall have produced similar electrical equipment for a minimum period of 10 years.

B. Products shall be listed by Underwriters Laboratories, Inc.

1.6 DELIVERY, STORAGE AND HANDLING

A. Handle transformers in accordance manufacturer's recommendations. Utilize factory provisions for all lifting, rigging, or hoisting.

B. Store transformers prior to installation in a temperature and humidity controlled space. If such a space is not available, apply temporary heat in accordance with the manufacturer's instructions within each ventilated type transformer case to exclude moisture and condensation.

PART 2 - PRODUCTS

2.1 MANUFACTURERS

A. Approved manufacturers are as follows:
1. Siemens - Sentron
2. General Electric
3. Square D
4. Eaton

B. Transformers specified in this Section and power distribution equipment feeding and being fed by the transformers shall be warranted and serviced by the same manufacturer. Manufacturer shall have a local field service organization available on an as needed basis.

2.2 GENERAL REQUIREMENTS

A. Transformers shall be of the general purpose, self cooled, two winding, dry type designed for 60 Hz operation. Transformers shall be designed, manufactured and tested in accordance with the latest ANSI, NEMA and IEEE Standards and shall be listed and labeled in accordance with UL 1561 and NEMA TP 3.

B. Insulation System

1. Transformers 15 KVA and larger shall be of the ventilated type and have a UL recognized 220 °C insulation system. The temperature ratings shall be based on an allowable *150°C* winding temperature rise above a 30°C hot spot and 40°C ambient.
2. Transformer design KVA rating shall be suitable for a 30°C average, 40°C maximum ambient temperature.

C. Core And Coil

1. Core construction shall be of non-aging electrical grade grain-oriented silicon steel with high permeability, low hysteresis and low eddy current losses as needed to achieve the TP1 efficiency levels. Core laminations shall be tightly assembled and magnetic flux densities shall be kept well below the saturation point.
2. Core and coil designs shall be low loss type with minimum efficiencies per NEMA TP1 when operated at 35% of full load capacity. Efficiency shall be tested in accordance with NEMA TP2 (Standard test method for measuring the energy consumption of distribution transformers).

Single Phase		Three Phase	
kVA	Efficiency	kVA	Efficiency
15	97.7%	15	97.0%
25	98.0%	30	97.5%
37.5	98.2%	45	97.7%
50	98.3%	75	98.0%
75	98.5%	112.5	98.2%
100	98.6%	150	98.3%
167	98.7%	225	98.5%

250	98.8%	300	98.6%
333	98.9%	500	98.7%
		750	98.8%

3. Windings shall be wound of high quality *copper.*
4. Ventilated of windings shall be accomplished by insulated spacers installed and arranged to brace coil layers and provide maximum ventilation. Core and coil assemblies shall be constructed to provide short circuit withstand capability as defined by ANSI and NEMA standards. The complete assembly shall be installed on vibration dampening pads to reduce noise and securely bolted to the enclosure base. A flexible grounding conductor shall be installed between the core and coil assembly and the transformer enclosure.
5. Core and coil sealing process:
   a. The complete core and coil assembly shall be impregnated with non-hydroscopic thermo-setting polyester varnish to provide a high dielectric and flame retardant seal.
   b. The shield of varnish to the coils shall effectively impregnate the entire core and coil assembly that results in a unit which is virtually impermeable to moisture, dust, dirt, salt air and other industrial contaminants and provide high dielectric seal.
6. Core lamination clamping angle shall be of adequate thickness and hardness to insure a tight and rigid core assembly to eliminate movement of core plates. Welded core designs shall include multiple beads as necessary to insure a tight and rigid core assembly to eliminate core plate movement.
7. Provide full capacity taps in the high-voltage windings as follows:
   a. 15 KVA through 500 KVA step-down transformers: 2 – 2½ % full capacity above normal and 4 – 2½ % full capacity below normal.
   b. 750 KVA and above step-down transformers: 2 – 2½ % full capacity above normal and 2 – 2½% full capacity below normal.
   c. Step-up and dual primary transformers: Provide NEMA standard taps.

D. Enclosures

1. Ventilated enclosures shall be of heavy gauge steel construction of NEMA 3R construction for outdoor use with the addition of weather shields and NEMA 1 for indoor installation. Front and rear covers shall be removable to provide access to terminal compartment(s). Terminals shall be fully sized to carry the transformer full load current and shall be arranged to accept UL listed cable connectors.
2. Enclosure wiring space and positioning of terminals shall allow for adequate cable bending space.
3. Finish enclosures in ANSI 61 gray paint.
4. Each transformer shall have a securely attached nameplate providing complete electrical ratings, wiring diagram, tap connections and catalog number, as applicable.

E. Sound

1. Unless otherwise specified, sound levels shall be in accordance with values allowed by NEMA ST-20.
2. If drawings request low noise rated transformer, transformer shall be minimum -3 decibels below values allowed by, NEMA ST-20.

F. Accessories

1. Provide weather shields for ventilated transformers installed outdoors conforming to the requirements of NEMA 250, Type 3R

PART 3 - EXECUTION

3.1 INSTALLATION

A. Install per manufacturer’s recommendations and contract documents.

B. Install units plumb, level and rigid without distortion.

3.2 ADJUSTMENTS AND CLEANING

A. On completion of installation, inspect components. Remove paint splatters and other spots, dirt and debris. Repair scratches and mars on finish to match original finish. Clean components internally using methods and materials recommended by manufacturer.

B. Adjust transformer taps to provide optimum voltage conditions at utilization equipment throughout normal operating cycle of facility. Record primary and secondary voltages and tap settings and submit with test results.

3.3 TESTING

A. Include the following minimum inspections and tests according to manufacturer's written instructions. Comply with IEEE C57.12.91 for test methods and data correction factors.

B. Inspect accessible components for cleanliness, mechanical and electrical integrity and damage or deterioration. Verify that temporary shipping bracing has been removed. Include internal inspection through access panels and covers.

C. Inspect bolted electrical connections for tightness according to manufacturer's published torque values or, if not available, those specified in UL 486A and UL 486B.

3.4 WARRANTY

A. Equipment manufacturer warrants that all goods supplied are free of non-conformities in workmanship and materials for one year from date of initial operation, but not more than eighteen months from date of shipment.

END OF SECTION 26 22 13

SECTION 26 23 13 – DISCONNECT SWITCHES

PART 1- GENERAL

Related Documents

A. Drawings and general provisions of the Contract, including General and Supplementary Conditions and Division 01 Specification sections, apply to work of this section.

B. This section is a Division 26 Basic Materials and Methods section, and is part of each division 26 section making reference to motor and circuit disconnect switches specified

Description of Work:

A. The extent of motor and circuit disconnect switch work is indicated by drawings and schedules.

B. The types of motor and circuit disconnect switches in this section include the following:

1. Equipment disconnects

2. Appliance disconnects

3. Motor-circuit disconnects

Quality Assurance

A. NEC Compliance: Comply with NEC as applicable to construction and installation of electrical motor and circuit disconnect switches.

B. UL Compliance and Labeling: Provide motor and circuit disconnect switches which have been UL listed and labeled.

C. NEMA Compliance: Comply with applicable requirements of NEMA Std.

Submittals

A. Product data: Submit manufacturer's data including specifications, installation instructions and general recommendations for each type of motor and circuit disconnect switch required.

PART 2- PRODUCTS

Acceptable Manufacturers:

A. Manufacturer: Subject to compliance with requirements, provide products of one of the following (for each type of switch)

1. Cutler-Hammer, Inc.
2. General. Electric Co.
3. Square D Company
4. Siemens

B. No other manufacturer's products will be considered for installation on this project.

Fabricated Switches

A. General-Duty Disconnect Switches: GENERAL DUTY SWITCHES ARE NOT ACCEPTABLE ON THIS PROJECT. Only heavy duty switches shall be installed as specified in this section. General duty switches erroneously installed on job shall be replaced with heavy duty switches of type required wherever found.

B. Heavy-Duty Safety Switches: Provide surface-mounted, heavy-duty type, sheet steel enclosed safety switches, of the types, sizes, and electrical characteristics indicated; Fusible rated, rated for ampacity of circuit and system voltage as a minimum where noted on drawings. Switches shall be of pole configuration required for application with a solid neutral if needed; incorporating quick-make, quick-break type switches; so constructed that switch blades are visible in "OFF" position with door open. Equip with operating handle which is easily recognizable, and is padlockable in the “OFF" position; construct current carrying parts of positive pressure type reinforced fuse clips. Where noted on the contract documents, provide non-fuse disconnect switches of the same class construction listed above. All switches shall be provided with a ground lug.

C. Provide rain-tight switches for outside locations and where noted on the drawings, or where required by code enforcing authorities.

1. Fuses: Provide fuses for safety switches, noted on the drawings, or as recommended by the switch manufacturer, of classes, types, and ratings needed to fulfill electrical requirements for service indicated.

PART 3- EXECUTION

Installation of Motor Circuit Disconnect Switches

A. Install: Motor and circuit disconnect switches where indicated, complying with the manufacturer's written instructions, applicable requirements of NEC, NEMA and NECA's "Standard of Installation", and in accordance with recognized industry practices to ensure that products fulfill requirements.

B. Coordinate motor and circuit disconnect switch installation work with electrical raceway and cable work, as necessary for proper interface.

C. Install disconnect switches used with motor-driven appliances, and motors and controllers within sight of the controller position unless otherwise indicated.

Disconnect Identification

A. Provide nameplates on disconnect switches. Nameplates shall be two or three color laminated plastic, a minimum of 3/64" thick, so that letters will be white on black background. Engraving shall be Roman Gothic at least 3/8" high appropriately spaced.

B. Nameplates shall be secured to equipment with chromium plated self-tapping screws (no adhesives, no rivets).

C. Nameplate on disconnect shall give equipment designation and where disconnect is fed from. Example: “ACU-1” fed from panel ‘M’.

Field Quality Control

A. Testing: Subsequent to completion of installation of electrical disconnect switches, energize circuits and demonstrate capability and compliance with requirements. Except as otherwise indicated, do not test switches by operating them under load. However, demonstrate switch operation through six opening/closing cycles with circuit unloaded. Open each switch enclosure for inspection of interior, mechanical and electrical connections, fuse installation, and for

verification of type and rating of fuses installed. Correct deficiencies then retest to demonstrate compliance. Remove and replace defective units with new units and retest.

END OF SECTION 26 23 13

SECTION 26 24 16 – PANELBOARDS

PART 1 - GENERAL

Related Documents:

A. Drawings and general provisions of Contract, including General, Supplementary conditions, Special Provisions and Division - 01 Specification Section, apply to work of this section.

B. This section is a Devision-26 Basic Materials and Methods Section, and is a part of each Division-26 Section making reference to panelboards specified herein.

Description of Work:

A. The extent of panelboard and enclosure work, including cabinets and cutout boxes is indicated by drawings and in schedules.

B. The types of panelboards and enclosures required for project include the following:

Power-distribution panelboards
Lighting and appliance panelboards

C. Refer to other Division-26 Sections for cable/wire, connectors and electrical raceway work required in conjunction with panelboards and enclosures, not work of this section.

Quality Assurance:

A. Comply with applicable UL safety standards pertaining to panelboards and accessories, and enclosures; provide units which have been UL listed and labeled.

B. Comply with NEC is applicable to installation of panelboards, cabinets, and cutout boxes.

C. Comply with NEMA Stds. Pub. No. 250, "Enclosures for Electrical Equipment (1000 volt maximum)" Pub. No. 1, "Panelboards", and installation portion of Pub. No.PB1.1, "Instructions for Safe Installation, Operation and Maintenance of Panelboards Rated 600 Volts or Less."

General:

A. Refer to Section 26 05 00 for general requirements on submittals.

Product Data:

A. Submit manufacturer's data including specifications, installation instructions and general recommendations, for each type of panelboard required. Include data substantiating that units comply with requirements.

B. Submit dimensioned drawings of panelboards and enclosures showing accurately scaled layout of enclosures and required individual panelboard devices, including but not necessarily limited to, circuit interrupters and accessories.

PART 2 - PRODUCTS:

Acceptable Manufacturers:

A. Subject to compliance with requirements, provide products of one of the following (for each type

of panelboard and enclosure):

Siemens
Square D
Eaton

Panelboards:

A. Panelboards shall be of domestic design and construction. Except as otherwise indicated, provide panelboards, enclosures and ancillary components of types, sizes, and rating indicated, which comply with manufacturer's standard materials, design and construction in accordance with published product information; equip with number of unit panelboard devices as required for complete installation. Where no more than one type of component meets indicated requirements, selection is Owner's option. Where types, sizes, or ratings are not indicated, comply with NEC, UL and established industry standards for applications indicated. Panelboard dimensions shall not exceed type panelboard specified on the Drawings and Schedules.

B. Provide dead-front safety type power distribution panelboards as indicated, with panelboard switching and protective devices in quantities, ratings, types, and with arrangement shown; with anti-turn solderless pressure type main lug connectors approved for copper conductors. Construct unit for connecting feeder at top orbottom of panel to suit job conditions. Equip with tin-plated aluminum bus bars and full-sized neutral bus; provide suitable lugs on neutral bus for outgoing feeders requiring neutral connections.

C. Provide molded-case main and branch circuit breaker types for each circuit, with toggle handles that indicate when tripped. Where multiple-pole breakers are indicated, provide with common trip so overload on one pole will trip all poles simultaneously. Provide a copper bare uninsulated grounding bar suitable for bolting to enclosure. Provide panelboards fabricated by same manufacturer as enclosures and which fit properly with enclosures. Main panelboards shall have UL Service Entrance Labels.

D. Provide dead-front safety type lighting and appliance panelboards as indicated with switching and protective devices in quantities, ratings, types and arrangement shown; with anti-burn solderless pressure type lug connectors approved for copper conductors; construct unit for connecting feeders at top or bottom of panel to suit job conditions; equip with tin-plated aluminum bus bars, fullsized neutral bar.

E. Provide molded case branch circuit breakers for each circuit, with toggle handles that indicate when tripped. Where multiple-pole circuit breakers are indicated, provide with common trip so overload on one pole will trip all poles simultaneously.

F. Provide suitable lug on neutral bus for each outgoing feeder required; provide a copper bare uninsulated ground bar suitable for bolting to enclosure; and provide panelboards fabricated by same manufacturer as enclosure, and which mate properly with enclosures. Where a lighting and appliance panelboard serves as a main panelboard, it shall have a UL Service Entrance Label.

G. Provide galvanized sheet steel cabinet type enclosures, in sixes and NEMA types as indicated, code-gage, minimum 16-gauge thickness. Construct with multiple knockouts and wiring gutters. Provide fronts with adjustable indicating trim clamps and doors with flush locks and keys, all panelboard enclosures keyed alike with concealed door covering. Provide baked gray enamel finish over a rus inhibitor. Design enclosure for surface or recessed mounting as required. Provide enclosures fabricated by same manufacturer as panelboards, and which fit properly with panelboards to be enclosed. Provide door-in-door construction as scheduled on the Drawings.

H. Panelboard widths, depths and heights, where applicable are limited to MAXIMUM sizes shown on schedules. Panelboards of greater width or depth and heights where applicable SHALL NOT

be acceptable.

I. ALL panelboards shall have the following modifications:
1. Panelboard fronts (including doors and trim) shall be constructed of sheet metal steel on gauge higher than code gauge (10 gauge max.).
2. Front shall be of door-in-door construction with concealed hinges and trim clamps.
3. Panelboard trim and box shall be painted ANSI 61 at factory.

J. Provide molded case circuit breakers of types scheduled as specified herein. Circuit breakers shall be listed or recognized with Underwriters' Laboratories Inc. under standard Ul489, conform to applicable requirements of NEMA Standards Publication ABI-1975 and meet the appropriate classifications of Federal Specifications W-C-375b. Circuit breaker type, rating, and modifications shall be as indicated on the Drawings and/or schedules.

K. This contractor shall exchange, remove and install breakers rated 150A or less for a different breaker rating, or similar type, number of poles and interrupting rating, when required in the job, without cost to the Owner.

L. Provide screw cover junction boxed (S.C.J.B.) as required on contract documents and/or the NEC for pulling requirement. S.C.J.B.'S noted for special systems shall be of the NEMA type I, surface or flush mounting, as called for on the Drawings, minimum 16 gauge steel thickness as munfactured by Circle A-W Products or approved equal. Boxes shall be provide with a 3/4" plywood thick backboard sized for full area of box wall mounting surface. Furnish terminal blocks for all wire splicing or terminations, Kulka 672 or equal in quality and construction. Number of terminal blocks shall be as required for all wires in S.C.J.B.'s.

PART 3 - EXECUTION:

Installation of Panelboards:

A. Install panelboards and enclosures where indicated, in accordance with manufacturer's written instructions, applicable requirements of NEC and the NECA's "Standard of Installation" and in compliance with recognized practices to ensure that products fulfill requirements.

B. Coordinate installation of panelboards and enclosures with cable and raceway installation work.

C. Anchor enclosures firmly to walls and structural surfaces, ensuring that they are permanently and mechanically secure.

D. Provide electrical connections within enclosures.

E. Provide 5" high x panelboard width x 12" depth concrete pad under each surface mounted panelboard for protection of branch circuit conduits rising from the floor up into panelboard.

Panelboard Directories:

A. Panelboards shall have neatly typed circuit directories behind clear plastic inserted in metal frame welded to door. Identify circuits by room numbers. Room numbers shall be those finally selected by the Owner; not necessarily those given on the Contract Documents.

B. "Spares" and "Spaces" shall be indicated with erasable pencil, printed using legible Gothic characters, not typed.

Panel Identification:

A. Panelboard nameplates shall be furnished by equipment manufacturer and installed at the factory. Nameplates shall be two or three color laminated plastic, a minimum of 3/64" thick, so that letters will be white on black background. Engraving shall be Roman Gothic at least 3/8" high appropriately spaced.

B. Nameplates shall be secured to equipment with chromium plated self-tapping screws (no adhesives, no rivets).

C. Electrical equipment to be identified includes: Distribution Panels, Panelboards, and individually enclosed circuit breakers.

D. Panelboard must be marked to indicate where the power supply source is located. Example: “Feeder Power Supply for Panel ‘A’ originates at Panel ‘MDP’.”

D. Nameplates on Panelboards shall give voltage characteristics, phase, number of wires, and where panel is fed from. Example: "Panel GLA, 120/280V, 3Ph, 4W, fed from panel ‘M’.”

END OF SECTION 26 24 16

SECTION 26 27 26- WIRING DEVICES

PART 1 - GENERAL

Related Documents:

A. The general provisions of the Contract, including General and Supplementary Conditions and General Requirements, apply to work specified in this section.

Description of Work:

A. The extent of wiring device work is indicated by drawings and schedules and by requirements of this section. Wiring devices are defined as single discrete units of electrical distribution systems which are intended to carry but not utilize electric energy.

B. The types of electrical wiring devices required for project include the following:

Receptacles
Switches
Wall Plates
Plugs
Connectors

Quality Assurance:

A. Provide products produced by one of the following (for each type of wiring device):

Pass & Seymour
Hubbell Inc.
Bryant Electric Co.
Arrow-Hart, Inc.
Crouse-Hinds Co.
General Electric Co.

B. Comply with National Electrical Code (NMPA No. 70) as applicable to construction and installation of electrical wiring devices.

C. Provide electrical wiring devices which have been tested, listed and labeled by Underwriters Laboratories.

UL 20 - Snap Switches
UL 498 - Plugs and Receptacles

D. Comply with National Electrical Manufacturers Association standards for general and specific purpose wiring devices.

Submittal:

E. Submit manufacturer's data on electrical wiring devices if asked for by engineer. Refer to Section 26 05 00 for additional requirements on product data submittal.

PART 2 - PRODUCTS

Fabricated Devices:

A. Provide factory-fabricated wiring devices in type, color and electrical rating for the service indicated. Where type and grade are not indicated, provide proper selection as determined by Installer to fulfill the wiring requirements and comply with NEC and NEMA standards for wiring devices.

Receptacles:

A. Configuration and requirements for all connector or outlet receptacles shall be in accordance with the NEMA Publication WD1. Fire resistant, non-absorptive, hot-welded, phenolic composition or equal bodies and based with metal plaster ears (integral with the supporting members). Single or duplex as shown or noted on the Drawings. Ivory color unless otherwise noted on the Drawings. Double grip contacts for each prong.

B. All receptacles shall be grounding type with a green colored hexagonal equipment ground screw of adequate size to accommodate an insulated grounding jumper (based on Table 250-95 of the NEC with minimum size No. 12 AWG). Ground terminals of all receptacles shall be internally connected to the receptacle mounting yoke.

C. Duplex convenience outlets, rated 20 amps, 125 volts, 2 pole, 3 wire NEMA 5-20R, back or side wiring, shall be Hubbell #5362-I, Pass & Seymour PS5362I, or approved equal.

D. Ground fault interrupter convenience outlet (GFI) shall be rated 20A, 125V, 2-pole, 3-wire, grounding, NEMA 5-20R, Hubbell GF20ILA, Pass & Seymour 2095I complete with stainless steel plate, Hubbell SS26. If weatherproof use Hubbell die cast aluminum weatherproof in-use cover model WP26E, or approved equal. Weatherproof outlets shall be GFI type as specified above, enclosed with appropriate weatherproof plate.

E. Isolated ground convenience outlets, rated 20 amps, 125 volts, 2 pole, 3 wire NEMA 5-20R, back or side wiring, shall be Hubbell IG5352-I, or approved equal.

Special Floor Outlets:

A. Special floor outlet shall be as specified on the Drawings. If not specified on drawings floor box shall be Legrand Wiremold EFB6 or equal with brass cover.

Switches:

A. Unless otherwise specified, each snap switch (flush tumbler-toggle) shall be of the AC general use type fully rated 20 amperes minimum at 120/277 volts, conforming to minimum requirements of the latest revision of the Underwriters Laboratories, Inc. UL 20, Fifth Edition Standard Snap Switches, NEMA stds. Pub. No. WD1 and further requirements herein specified. Specification grade, heavy duty single pole or 3-way of the maintained momentary or lock type as indicated on the Drawings. Switches shall operate in any position and shall be fully enclosed cup type with entire body of phenolic, urea or melamine. Fiber, paper or similar insulating material shall not be used for body or cover. Ivory color handles, unless otherwise indicated on the Drawings. Silver or silver allow contacts. AC 120/277 volt general use snap switches shall be capable of withstanding tests as outlines in NEMA publication WD1 and shall be as follows or an Engineer approved equal, unless otherwise noted.

B. Single pole switches shall be Hubbell HBL1221-I, Pass & Seymour PS20AC1I, Bryant #4901-I, or approved equal.

C. Two pole switches shall be Hubbell HBL1222-I, Pass &Seymour PS20AC2I, Bryant #4902-I, or approved equal.

D. Three-way switches shall be Hubbell HBL1223-I, Pass & Seymour PS20AC3I, Bryant #4903-I, or

approved equal in quality and function.

E. Four-way switches shall be Hubbell HBL1224-I, Pass & Seymour PS20AC4I, Bryant #4904-I, or approved equal in quality and function.

F. Single pole key operated, switches shall be corbin-lock type, Hubbell HBL1221RKL with SS12RKL plate, Pass & Seymour PS20AC1KL with SS717 plate, Bryant #4901RKL with SS12RKL plate, or approved equal in quality appearance and function.

G. Three-way key operated, switches shall be corbin-lock type, Hubbell HBL1223RKL with SS12RKL plate, Pass & Seymour PS20AC3KL with SS717 plate, Bryant #4903RKL with SS12RKL plate, or approved equal in quality appearance and function.

H. Single pole switch with pilot light, unless otherwise noted on Drawings, shall be spec. grade, red lighted handle, rated 20 amps, 120V, Hubbell HBL1221PL, Pass & Seymour PS20AC1RPL(120V) PS20AC1RPL7(277V), Bryant #4901PLR120 #4901PLR277, or approved equal in quality and function.

I. Single pole switch with green lighted handle, rated 20 amps, 120V, shall be Hubbell HBL1221PLG, or approved equal in quality and function.

J. Weatherproof switches shall include the type of snap switch indicated on the Drawings and specified herein, enclosed with a Crouse-Hinds #DS-181 cover and gasket mounted in an FS cast box.

K. Thermal switches controlling or disconnecting motor loads shall be G.E., or equal in quality and function, horsepower rated, approved for motor control service and shall be complete with overload devices of proper ratings.

L. Where thermal switches are combined with pilot lights, on 120V, pilot light shall be Hubbell #432 with #7298 red jewel.

Wiring Devices Accessories:

A. Wall plates-- Provide single switch, single and duplex outlet wall plates for wiring devices, with ganging and cutouts as indicated, provide with metal screw for securing plates to devices as noted below, screw heads colored to match finish of plates and wall plates possessing the following additional construction features:
Wet Locations: Receptacles in wet locations shall be installed with a hinged outlet cover/enclosure clearly marked “Suitable for Wet Locations While in Use” and “UL Listed”. There must be a gasket between the enclosure and the mounting surface, and between the hinged cover and mounting plate/base to assure proper seal. Provide Taymac, Specification Grade, or approved equal.

B. Material and Finish: Device coverplates in finished areas where conduit is concealed shall be .035" nominal thickness, 18% chromium and 8% nickel, Sierra "S-N" line, type 302 stainless steel or equal. Devices coverplates, where conduit is exposed, shall be galvanized steel.

PART 3- EXECUTION

Inspection:

A. Installer must examine areas and conditions under which wiring devices are to be installed and notify Contractor in writing of conditions detrimental to proper and timely completion of the work. Do not proceed with the work until unsatisfactory condition has been corrected in a manner acceptable to the Installer.

B. It shall be the responsibility of the electrical contractor to determine from the architectural drawings and by actual determination on the site, the exact location of each and every outlet or switch. The outlet or switch locations shall be modified from those shown on the plans to accommodate changes in door swings or to clear other interferences that may arise from job construction details as well as modifications within room spaces.

C. These modifications shall be made with no change in contract price and shall be a matter of job coordination at the expense of the electrical contractor. The Contractor shall check these conditions throughout the entire job and shall notify the Architect/Engineer of discrepancies as they may occur before proceeding with the installation of the work to verify the modifications, if any.

Installation of Wiring Devices:

A. Install wiring devices where indicated, in accordance with manufacturer written instructions, applicable requirements of NEC and National Electrical Contractor Association's "Standard of Installation" and in accordance with recognized industry practices to ensure that products service intended function.

B. Delay installation of devices until wiring is completed.

C. Install receptacles and switches only in electrical boxes which are clean; free from excess building materials, debris, etc.

D. Adjacent switches shall be combines in one box.

E. Where switches control difference voltages (that is 120V and 277 V) place barriers in box to provide separation.

F. Switch plates where devices are ganged shall be one piece. Switches shall be mounted 48" and convenience outlets 18", center of box above the finished floor level except as otherwise specified on the Drawings. Align devices and plates horizontally and vertically.

G. Wall boxes shall be set in advance of the wall construction, shall be blocked in place and secured. All wall boxes shall be set flush with this finished building construction and the contractor shall furnish and install extension sleeves as required to extend boxes to the finished surfaces of special furring.

H. The electrical contractor shall be responsible for coordinating with other trades the actual installation of his outlet boxes in walls. The wall building material (cinder block, brick, sheetrock or whatever) shall provide an even trim around outlet boxes not exceeding a 1/4" gap. The device cover plate should be able to cover up wall openings around outlet boxes. Whenever an outlet box installation fails to comply with the above listed condition, the electrical contractor shall arrange to have the problem corrected.

I. Caulking, spackling material or any other sealer used shall be kept out of the outlet box area.

J. Wiring device yokes shall be installed in physical contact with the plaster ring. Where the above contact cannot be obtained, a green covered bonding conductor shall be installed.

K. Device cover plates for each and every device shall be furnished and installed by this Contractor.

Protection of Wall Plates and Receptacles:

A. Upon installation of wall plates and receptacles, advise Contractor regarding proper and cautious

use of convenience outlets. At time of Substantial Completion, replace those items which have been damaged, including those burned and scored by faulty plugs.

Testing:

A. Test wiring devices to ensure electrical continuity of grounding connections and after energizing circuitry, to demonstrate compliance with requirements.

END OF SECTION 26 27 26

SECTION 26 51 00 - INTERIOR LIGHTING

PART 1- GENERAL

Summary

A. Includes But Not Limited To
   1. Furnish and install lighting system as described in Contract Documents complete with lamps.

B. Related Sections
   1. Section 26 06 00 - Common Work Results for Electrical

PART 2- PRODUCTS

Equipment

A. Lighting Fixtures - See Fixture Schedule on Drawings.
   1. Approved Manufacturers-
      1) Columbia
      2) Hubbell
      3) Prescolite
      4) Kim
      5) Cree
      6) Lithonia

B. Fluorescent Ballasts

   2. Electronic solid state for 265mA, T5 lamps
      a. UL listed and labeled.
      b. Minimum power factor of 90 percent
      c. Maximum total harmonic distortion of 20 percent.
      d. Operation of lamps at normal light output and in compliance with Lamp Manufacturer's recommendations.
      e. Audible noise level lower than quietest CBM certified ballast for same application.
      f. Transient protection in accordance with ANSI 62.41-1984.
      g. Comply with FCC Rules Part 18, 15J.
      h. Maximum crest factor of 1.7.
      i. Five year full replacement warranty including labor allowance for replacement.
      j. Ballast voltage to match system voltage.
      k. Fluorescent lamps shall be 3500K color temperature.
      k. Approved Manufacturers -
         1) Advance
         2) Magnetek/Triad
         3) Motorola
         4) Osram Sylvania

C. Lamps
   1. Approved Manufacturers -
      a. Osram Sylvania
      b. General Electric
      c. North American Philips

D. LED Light Fixtures
   1. Minimum CRI rating of 90.
   2. Minimum lumens per watt of 90.

3. LED's to be 4000K color temperature.

PART 3- EXECUTION

Installation

A. Interface with Other Work.
   1. Coordinate with Sections 09100 and 09500 to obtain symmetrical arrangement of fixtures in acoustic tile ceiling.
   2. Coordinate with Section 09900 to ensure that light coves are properly painted before installation of light fixtures.

B. Securely mount fixtures. Support fixtures weighing 50 lbs or more, especially those mounted in high ceiling areas such as Cultural Center and Chapel, from building framing or structural members.

C. Fasten lay-in fluorescent fixtures to ceiling suspension system on each side with bolts, screws, rivets, or clips. In addition, connect lay-in fixtures weighing less than 50 lbs with two wire hangers minimum to building framing or structural members. Connect wires to opposing corners of fixture and may be slightly slack. Make final conduit connections to lay-in fluorescent fixtures with specified flexible conduit or flexible fixture whips.

D. Where fluorescent fixtures are shown installed end to end, provide suitable connectors or collars to connect adjoining units to appear as a continuous unit.

E. Where recessed fixtures are to be installed, provide openings, plaster rings, etc, of exact dimensions for such fixtures to be inserted in openings. Terminate circuits for recessed fixtures in an extension outlet box near fixture and connect with specified flexible conduit. Where installed on canopies, contractor must ensure recessed fixtures will fit within the canopy space.

F. Where pendant mounted light fixtures are to be installed, provide 5/8" threaded rods to support light fixture, if adjustable air craft cable is not called out for on plans.

G. Contractor must clean light fixtures of dust, dirt, and debris accumulated during construction before turning over building to owner. Replace lamps not working or broken during construction.

END OF SECTION 26 51 00

SECTION 26 56 00 – EXTERIOR LIGHTING

PART 1- GENERAL

Summary

A. Includes But Not Limited To
   1. Furnish and install exterior lighting system as described in Contract Documents including concrete bases for light poles.

B. Related Sections
   1. Section 26 06 00 - Common Work Results for Electrical

PART 2- PRODUCTS

Equipment

A. Lighting Fixtures- See Fixture Schedule on Drawings.
   1. Approved Manufacturers-
      a. Hubbell Outdoor Lighting
      b. Spaulding Lighting
      c. Kim Lighting
      d. Cree
      e. Architectural Area Lighting

B. Parking Area Poles
   1. Designed for wind loading required for project location.
   2. Steel reinforced concrete with prestressing to meet wind loading requirements. Provide #6 rebar in concrete in vertical and horizontal.
   3. Anchor base type with matching anchor bolt cover secured to base.
   4. Include handhole with cover at pole base.
   5. Finish & Color -
      a. Natural exposed aggregate finish with clear acrylic coating.
      b. Color as shown on drawings. If color is not specified verify color with architect.
   6. Approved Manufacturers
      a. Spaulding Lighting
      b. Kim Lighting
      c. Architectural Area Lighting
      d. Cree

C. Conduit
   1. Type PVC as specified in Section 26 05 33.
   2. Do not use direct burial cable.

D. Exterior Lighting Control
   1. Time Switch
      a. Standard 24 hour, 7 day programmable, electronic time switch, 120/277 volts
      b. Approved Manufacturers -
         1) Intermatic
         2) Tork
         3) Paragon
   2. Photo Cell
      a. 120 volts.
      b. Approved Manufacturers -
         1) Intermatic

2) Tork
3) Paragon

3. Lighting Contactor
   a. 120 volt coil, 20 amps, NEMA 1 enclosure.
   b. Can be same manufacturer as main panelboard.
   c. Approved Manufacturers -
      1) Cutler Hammer
      2) General Electric
      3) Siemens
      4) Square D

PART 3 - EXECUTION

Installation

A. Interface With Other Work - Coordinate location of anchor bolts and conduit in concrete bases so pole is properly mounted and centered on base. Verify exact anchor bolts required and installation with manufacturer.

B. Install time switch and contactor inside building to control parking area and exterior building lighting. Program time switch with schedule provided by owner. Coordinate with owner for schedule preferences.

C. Locate photo cell outside building on roof and away from any light source and direct sunlight. Wire photo cell and time switch in series to control lighting contactor for photo cell ON, Time switch OFF operation.

D. If hinged light pole bases are used, install to Miss Major landscaping elements and permanent obstructions when lowered.

E. Contractor must follow manufacturer's recommendations when installing the bases for exterior pole or ground fixtures.

F. Exterior recessed fixtures must be provided with clear lens to protect lamp from dirt and debris.

END OF SECTION 26 56 00

SECTION 28 31 00 - FIRE DETECTION AND ALARM

PART 1 - GENERAL STANDARDS

Description

A. This section covers the minimum requirements pertaining to the design, manufacture and installation of the Fire Alarm Systems. The systems shall be integrated, proprietary, monitoring and control systems, using distributed processing and digital transmission techniques with solid state components. Equipment shall include, but not be limited to the following;
Fire Alarm Control Panels (FACP)
Manual Fire Alarm Stations
Smoke Detectors
Heat Detectors
Audio/Visual Annunciators
Relays - Fan Shutdown and Computer Room System Interface
Water - Flow Switches
Tamper Switches
Annunciator Panels

1. The use of flashing exit signs will be not acceptable.
2. All building systems will be tied into the building fire alarm. This shall include any subsystem such as automatic data processing (ADP) areas and telecommunication areas.
3. The work covered by this specification includes the system equipment specified, installation and necessary control wiring to insure a fully operable system. In addition, the installation shall include all memory software, push buttons, indicator lamps, electronic hardware and accessories for a completed operable system in accordance with the AOperations@ paragraph of this guideline.
4. The system shall be fully usable as a UL listed Fire Alarm/Life Safety System, and all system devices shall bear the UL label. In addition, the system shall conform to the requirements of the publications listed below:
Factory Mutual Engineering Corp., Factory Mutual System Publication, AFactory Mutual Approval Guide,@ latest edition.
NFPA Standards: Latest editions
No. 70 National Electrical Code
No. 72 Protection Signaling Systems
No. 72E Automatic Fire Detectors
No. 101 Life Safety Code

Basic Design:

A. The systems shall be modular design to allow future expansion with a Minimum of hardware additions. The systems shall be equipped with battery standby for minimum of 90 minutes operation during commercial power outages and they shall instantly revert to battery power upon loss of line voltage.

Operation:

A. An integrated control system in each building shall provide all power, annunciation, supervision, controls and standby emergency battery power for the detection and alarm system. The control panels shall be modular in construction, containing all necessary modules to operate with capability of being expanded at any time up to the predetermined system maximum capacity.

B. The system shall consist of all detection devices, control equipment, audio-visions, remote annunciators installed, wired and connected in accordance with the drawings and specifications for

function as specified, herein.

C. The system shall be electrically supervised. Zone receiving circuits shall be individually supervised for open wiring, ground faults, the loss of battery or fuse, low battery and module replacement. Detection of an input zone trouble condition shall be individually annunciated by an appropriate L.E.D. Signal circuits shall be supervised for open circuits, shorts, and general faults. Circuit trouble shall be individually annunciate. Fire alarm signals shall override trouble signals.

D. The fire alarm system shall be provided with 24 hour battery by connecting to the emergency power system in the building. The system shall function as follows upon activation of any automatic device (smoke detector, heat detector, water-flow switch) or activation of a manual pull station.
1. Flash the respective zone L.E.D. at the Fire Alarm Control Panel and at the remote annunciator.
2. Activate audio-visual signal units only on the floor of alarm initiation.
3. Shut down HVAC units.
4. Provide two (2) sets of dry contact in the main buildings fore alarm control panels for interface of systems for remote signal monitoring.
5. Fire alarm control panels shall be equipped with a coded module signal initiating circuit capable of manual operation at the control panel. The device shall sound an alarm signal distinct from the normal fire alarm signal and shall be used as designated by the Owner.

E. Activation of the alarm silence/acknowledge switch shall silence the alarm signal and cause the flashing L.E.D. to revert to a steady state of illumination. Upon occurrence of a subsequent alarm in a different zone, the alarm signal shall resound until silenced. The alarm and detection systems shall b A.D.T. 4520 Series equipment or equal.

PART 2 - PRODUCTS

A. Smoke detectors shall be solid state, photelectronic type operating on the light scattering principle. Detector shall be factory preset to detect smoke at a nominal one and one-half percent (1.5%) light obscuration per foot, equipped with self-compensating circuitry for maximum stability. An alarm condition shall be indicated by a red L.E.D. capable of being remote annunciated. Unit shall have a 135^0F fixed thermal detector built-in, which shall have an built-in calibrated test feature, and shall be UL listed and F.M. approved. Smoke detector shall be an A.D.T. 3521 Series device or equal.

B. Air duct smoke detectors shall operate on a cross-sectional air sampling principle to compensate for and overcome stratification and the skin effect. Duct detector shall consist of a standard photoelectric detector mounted in an air duct sampling assembly and tube that extends across the duct or plenum of the ventilating unit. The air duct detector shall be installed in the duct where indicated on the drawings in accordance with the manufacturer=s instructions, and FNPA 90A Methods. Air duct detector shall be UL listed and F.M. approved A.D.T. 3527 Series device or equal.

C. Thermal heat detectors shall be fixed temperature only or combination fixed temperature/rate of use devices as indicated on the drawings. The fixed temperature portion shall operate when the device reaches its rated temperature. The rate of rise portion of the detector shall operate when its temperature is increased at the rate of rise 15^0F/minute, or greater. Thermal detector shall be UL listed, A.D.T. 4220 Series devices or equal.

D. Manual pull stations shall be non-coded, dual-action type. The station shall provide mechanical indication of operation. Operating handle shall be recessed to prevent accidental operation, and shall be UL listed and F.M. approved, A.D.T. 5050 Series devices or equal.

E. Horn/strobe alarm devices shall be white lens with the AFIRE@ lettered, thereon, visible through 1800 field of view, A.D.T. type 340824 or equal. Where construction restrictions prohibit full recessing, an A.D.T. P42038 or equal semi-flush (SF) plate shall be provided. Mounted of units shall be on an standard 4" square electrical box.

F. Relays shall be 30 ampere rated, 24 volt D.C. coil voltage, single pole, double throw, Detral Series Model 900, mounted in a Hoffman 6" X 6" X 3" hinged cover cutout box, catalog number AHE, gray enamel finish. Provide 12 volt D.C. coils where required to accommodate existing computer room alarm panels.

G. Water-flow switches shall be suitable for wet pipe installation with a built-in time delay to prevent activation by water hammer or surges, A.D.T. WF5 Series or equal.

H. Tamper switches shall be S.P.D.T., suitable to coordinate with type of valve where installed.

I. Annunciators (remote) shall be zone supervision for all zone circuits as shown on the drawings, and shall contain accommodations for ten (10) future zone expansions. Annunciators shall be serial type A.D.T. Model GA-50 or equal. Mounted shall be flush or semi-flush as designated, housed in a custom-hinged cabinet. The unit shall include supervised alarm indicators with audible alarm and key reset/key lamp switch.

J. End of line devices (E.O.L.) shall be provided as required to ensure system integrity.

K. Moisture detectors shall be A.D.T. #3691 or equal.

Manufacturers:

A. A.D.T., Simplex, Honeywell, Notifier, Pyrotronics, FCI, and other meeting these guidelines and approved by GSC may be acceptable for installation.

Installation:

A. All wiring system junction and outlet boxes, tamper switches, flow alarm switches, duct-mounted smoke detectors shall be identified by means of self-adhesive-backed, preprinted, color-coded, vinyl labels indicating system and function. ADymo@ type labeling machine strips will not be acceptable unless riveted or screwed to surfaces.

B. All fire alarm system wiring shall be installed in conduit and shall be isolated from other systems. It shall be the explicit responsibility of the contractor to verify that adequate wire quantities are provided so as to fulfill the AOperations@ paragraph of the specification.

C. The work shall be carefully laid out in advance, and where cutting, chasing or drilling of floors, walls, partitions, ceilings or other surfaces is necessary for the proper installation, support or anchorage of the conduit or other work this work shall be carefully done, and any damage to the buildings, piping or equipment shall be repaired and refinished by skilled mechanics of the respective trade required at no additional cost to the Owner.

Submittals, Shop Drawings:

A. Shop drawings and product data for the fire alarm system shall be submitted as required under the Electrical General Provisions Section and shall include;

B. Trunk cable schematic showing transponder locations and all truck data.

C. List of connected data points, including transponders to which they are connected, and input devices.

D. Technical specification data sheets of each system components.

Maintenance Manuals and Instructions:

A. Provide maintenance manuals as specified in the Electrical General Provisions Section and include final corrected copies of system diagrams that include all changes and additions made prior to completion of the installation.

B. Furnish necessary sections of instruction for the Owner=s maintenance and system operating personnel.

C. Tests: After installation is complete and at such time as directed by the Owner, the contractor shall conduct a complete system operating requirements of this specification; that individual conductors of all circuits are free of grounds, shorts and breaks. This test shall include the complete cycling of all fire, smoke, flow, etc. The test shall be repeated at a later date for the State Certifying authorities.

PART 3 - EXECUTION

General:

A. The entire installation shall comply with N.E.C. and all applicable provisions of Section 16. All wiring shall be in E.M.T. conduit. Wherever possible the existing conduit in the respective facilities shall be reused.

Qualifications of Installer:

A. The system shall be installed by an experienced firm regularly engaged in the installation of automatic fire-detection and alarm systems in accordance with the National Fire Protection Association. Approval of the installer will not relieve the contractor from his responsibilities to perform all work in accordance with the specifications and contract terms.

Installing Contractor:

A. The fire alarm equipment supplier shall be licensed by the State of Texas to sell service and install fire alarm systems and shall have been engaged in the business on a full-time basis for a minimum of five (5) years. The alarm system shall be installed under the supervision of a licensed fire alarm system installation superintendent.

Record and As-Built Drawings:

A. Upon completion of the installation and prior to final inspection, the contractor shall furnish four (4) copies of record drawings that show where detectors are installed. The AAs-Built@ drawings shall show by number, the detector in the exact sequence in which they are installed on the circuit.

Guarantee:

A. The fire alarm systems shall be guaranteed for a period of one (1) year from date of acceptance. The guarantee shall include equipment and systems parts, and all labor and workmanship. At the time of bidding, furnish a quotation for providing a one (1) year maintenance agreement for all building fire alarm systems within the scope of these guidelines and a subsequent quotation for an additional one (1) year renewal of the maintenance agreement.

End of Section 28 31 00

SECTION 321540
DECOMPOSED GRANITE SURFACING

PART 1 - GENERAL

1.01 RELATED DOCUMENTS

A. Drawings and general provisions of the Contract, including General and Supplementary Conditions and Division 01 Specification Sections, apply to this Section.

1.02 SUMMARY

A. Section Includes the following:

1. Decomposed fine graded granite aggregate for use as a traffic bearing surface in plaza areas.
2. Weed-control barriers.
3. Pesticides.
4. Stabilizer-binder.

B. Related Sections:

1. Division 02 Section "Earth Moving" for excavation, filling, and rough grading.
2. Division 32 Section “Aluminum Landscape Edgings” for edge restraints.

1.03 DEFINITIONS

A. Finish Grade: Elevation of finished surface of planting soil.

B. Pesticide: A substance or mixture intended for preventing, destroying, repelling, or mitigating a pest. This includes insecticides, miticides, herbicides, fungicides, rodenticides, and molluscicides. It also includes substances or mixtures intended for use as a plant regulator, defoliant, or desiccant.

C. Pests: Living organisms that occur where they are not desired, or that cause damage to plants, animals, or people. These include insects, mites, grubs, mollusks (snails and slugs), rodents (gophers, moles, and mice), unwanted plants (weeds), fungi, bacteria, and viruses.

1.04 SUBMITTALS

A. Product Data: For each type of product indicated, including the following:

1. Aggregate Surfacing Material and Stabilizer-Binder Mix: Include method of mixing aggregate and stabilizer-binder.
2. Herbicides: Include product label and manufacturer's application instructions specific to the Project.

B. Samples for Verification: For each of the following:

1. Aggregate: 1-pint volume of each mineral aggregate required, in sealed plastic bags labeled with source of aggregate. Sample shall be typical of the lot of material to be delivered and installed on the site; provide an accurate indication of color, texture, and makeup of the material.
2. Weed Control Barrier: 12 by 12 inches.

C. Qualification Data: For qualified landscape Installer. Include list of similar projects completed by Installer demonstrating Installer's capabilities and experience. Include project names, addresses, and year completed, and include names and addresses of owners' contact persons.

1.05 QUALITY ASSURANCE

A. Installer Qualifications: A qualified landscape Installer whose work has resulted in successful aggregate surfaced landscaping.

1. Experience: Three years' experience in aggregate surface installation in addition to requirements in Division 01 Section "Quality Requirements."
2. Pesticide Applicator: State licensed, commercial.

B. Preinstallation Conference: Conduct conference at Project site.

1.06 DELIVERY, STORAGE, AND HANDLING

A. Packaged Materials: Deliver packaged materials in original, unopened containers showing weight, certified analysis, name and address of manufacturer, and indication of conformance with state and federal laws if applicable.

B. Bulk Materials:

1. Do not dump or store bulk materials near structures, utilities, walkways and pavements, or on existing turf areas or plants.
2. Provide erosion-control measures to prevent erosion or displacement of bulk materials, discharge of aggregate-bearing water runoff, and airborne dust reaching adjacent properties, water conveyance systems, or walkways.

1.07 PROJECT CONDITIONS

A. Weather Limitations: Proceed with aggregate surfacing work only when existing and forecasted weather conditions permit surfacing operations to be performed when beneficial and optimum results may be obtained. Apply products during favorable weather conditions according to manufacturer's written instructions.

PART 2 - PRODUCTS

2.01 AGGREGATE SURFACING MATERIAL

A. Regional Materials: Provide aggregate surfacing material that has been extracted or recovered, as well as manufactured, within 500 miles of Project site.

B. Decomposed Granite with Fines: Hard, durable decomposed granite stone, washed free of loam, sand, clay, and other foreign substances, of following size range and color:

1. Size Range: Aggregates complying with ASTM C 136 Crushed Stone Sieve Analysis Percentage of Weight Passing a Square Mesh Sieve, and the following for aggregate gradation:

Sieve Designation	Range of Percent Passing
1/2 inch	95 to 100

3/8 inch	90 to 100
No. 4	50 to 100
No. 16	55 to 65
No. 30	25 to 55
No. 100	10 to 20
No. 200	5 to 18

2. Sand Equivalent: ASTM D2419, minimum of 30.
3. R-Value: ASTM D2488, minimum of 70.
4. Color: Uniform grey
5. Available Sources: Subject to compliance with requirements, sources offering products that may be incorporated into the Work include, but are not limited to, the following:

    a. Colorado Materials, Inc.; 1821 Boston Avenue, Suite B; Longmont, Colorado 80501; (303)-682-2314.
    b. Pioneer Sand and Gravel; 7608 HWY. 93; Golden, Colorado; (303)-279-4748.

2.02 WEED-CONTROL BARRIERS

A. Weed Control Barrier:

1. Nonwoven geotextile filter fabric made from polypropylene or polyester fabric, 3 oz./sq. yd. minimum, composed of fibers formed into a stable network so that fibers retain their relative position. Fabric shall be inert to biological degradation and resist naturally-encountered chemicals, alkalis, and acids.

2.03 PESTICIDES

A. General: Pesticide registered and approved by EPA, acceptable to authorities having jurisdiction, and of type recommended by manufacturer for each specific problem and as required for Project conditions and application. Do not use restricted pesticides unless authorized in writing by authorities having jurisdiction.

B. Pre-Emergent Herbicide (Selective and Non-Selective): Effective for controlling the germination or growth of weeds within aggregate surfaced areas at the soil level directly below the aggregate layer.

2.04 MISCELLANEOUS PRODUCTS

A. Stabilizer-Binder: Non-toxic, colorless, odorless organic powder formulated to bind decomposed granite together to produce a firm surface.

1. Available Products: Subject to compliance with requirements, products that may be incorporated into the Work include, but are not limited to the following:

    a. Stabilizer Solutions, Inc.; Stabilizer.

2.05 AGGREGATE AND STABILIZER-BINDER MIX

A. General: Comply with stabilizer-binder manufacturer's written recommendations.

1. Thoroughly and uniformly mix stabilizer-binder throughout aggregate at the rate of not less than 12 lbs. of stabilizer-binder per ton of aggregate.
2. Stabilizer-binder shall be incorporated with aggregate by use of a pugmill mixer that includes a weight belt feeder to insure the proper ratio of stabilizer-binder to

aggregate. Blending with the use of a bucket loader or belt blending without a weight feeder will not be accepted.

PART 3 - EXECUTION

3.01 EXAMINATION

A. Examine areas to receive aggregate surfacing for compliance with requirements and conditions affecting installation and performance.

1. Verify that no foreign or deleterious material or liquid such as paint, paint washout, concrete slurry, concrete layers or chunks, cement, plaster, oils, gasoline, diesel fuel, paint thinner, turpentine, tar, roofing compound, or acid has been deposited in soil within area receiving aggregate surfacing materials.
2. Do not mix or place aggregate surfacing materials in frozen, wet, or muddy conditions.
3. Uniformly moisten excessively dry aggregate material which is too dusty.

B. Proceed with installation only after unsatisfactory conditions have been corrected.

3.02 PREPARATION

A. Protect structures, utilities, sidewalks, pavements, and other facilities and turf areas and existing plants from damage caused by aggregate surfacing operations.

B. Install erosion-control measures to prevent erosion or displacement of aggregate surfacing and discharge of aggregate-bearing water runoff or airborne dust to adjacent properties and walkways.

3.03 PESTICIDE APPLICATION

A. Apply pesticides and other chemical products and biological control agents in accordance with authorities having jurisdiction and manufacturer's written recommendations. Coordinate applications with Owner's operations and others in proximity to the Work. Notify Owner before each application is performed.

B. Pre-Emergent Herbicides (Selective and Non-Selective): Apply to earthen grade beneath weed-control barrier in accordance with manufacturer's written recommendations.

3.04 AGGREGATE SURFACING APPLICATION

A. Install weed-control barriers before applying aggregate surfacing according to manufacturer's written instructions. Completely cover area to be surfaced, overlapping edges a minimum of 6 inches and secure seams with galvanized pins.

B. Apply aggregate and stabilizer-binder mix over whole surface of area indicated, to an average compressed thickness of 4 inches. Grade areas to a smooth, uniform surface finished level with adjacent finish grades, with compacted, uniformly fine texture.

1. Place material in 2 inch lifts, evenly spreading material over area indicated.
2. Thoroughly water the material so that the entire depth of the material is moist.
3. After final lift is placed, smooth to an even and continuous surface. Roll and rake, remove ridges, and fill depressions to meet finish grades.
4. Slope to ensure positive drainage away from buildings and structures.

3.05 CLEANUP AND PROTECTION

A. During aggregate surfacing operations, keep adjacent paving and construction clean and work area in an orderly condition.

1. Hose down planting areas with fine spray of potable water to wash leaves of plants, turf, grass and other plant materials.

B. Protect plants from damage due to aggregate surfacing operations. Maintain protection during installation periods. Treat, repair, or replace damaged plantings.

3.06 DISPOSAL

A. Remove surplus aggregate surfacing and waste material including excess trash and debris, and legally dispose of them off Owner's property.

END OF SECTION 32 15 40

SECTION 329111
MULCHING

PART 1 - GENERAL

1.01 RELATED DOCUMENTS

A. Drawings and general provisions of the Contract, including General and Supplementary Conditions and Division 01 Specification Sections, apply to this Section.

1.02 SUMMARY

A. Section Includes mulching including the following:

1. Organic mulch.

B. Related Sections:

1. Division 31 Section "Site Clearing" for protection of existing trees and plantings, topsoil stripping and stockpiling, and site clearing.
2. Division 32 Section "Planting Irrigation " for turf irrigation.

1.03 DEFINITIONS

A. Finish Grade: Elevation of finished surface of planting soil.

B. Planting Area: Areas to be planted.

C. Plant; Plants; Plant Material: These terms refer to vegetation in general, including trees, shrubs, vines, ground covers, ornamental grasses, bulbs, corms, tubers, or herbaceous vegetation.

1.04 SUBMITTALS

A. Product Data: For each type of product indicated.

B. Samples for Verification: For each of the following:

1. Organic Mulch: 1-pint volume of indicated organic mulch required; in sealed plastic bags labeled with composition of materials by percentage of weight and source of mulch. Each Sample shall be typical of the lot of material to be furnished; provide an accurate representation of color, texture, and organic makeup.

C. Qualification Data: For qualified landscape Installer.

1.05 QUALITY ASSURANCE

A. Installer Qualifications: Installer Qualifications: As indicated in Division 32 Section “Plants.”

B. Preinstallation Conference: Conduct conference at Project site.

1.06 DELIVERY, STORAGE, AND HANDLING

A. Packaged Materials: Deliver packaged materials in original, unopened containers

showing weight, certified analysis, name and address of manufacturer, and indication of conformance with state and federal laws, as applicable.

B. Bulk Materials:

1. Do not dump or store bulk materials near structures, utilities, walkways and pavements, or on existing turf areas or plants.
2. Provide erosion-control measures to prevent erosion or displacement of bulk materials, discharge of soil-bearing water runoff, and airborne dust reaching adjacent properties, water conveyance systems, or walkways.

1.07 PROJECT CONDITIONS

A. Weather Limitations: Proceed with mulching only when existing and forecasted weather conditions permit mulching to be performed when beneficial and optimum results may be obtained. Apply products during favorable weather conditions according to manufacturer's written instructions.

PART 2 - PRODUCTS

2.01 MULCHES

A. Organic Mulch: Free from deleterious materials and suitable as a top dressing of trees and shrubs, produced from 100% post-consumer wood waste.

1. Color: Natural.
2. Manufacturer local to El Paso
3. Organic mulch to be 100% tree product derived from local operations consisting of chipper operations

B. Aggregate Mulch: Free from deleterious materials and suitable as a top dressing of trees and shrubs.

1. Color: Natural Tan River Rock.
2. Size: 2” - 4”

PART 3 - EXECUTION

3.01 EXAMINATION

A. Examine areas to be mulched for compliance with requirements and other conditions affecting installation and performance.

1. Verify that no foreign or deleterious material or liquid such as paint, paint washout, concrete slurry, concrete layers or chunks, cement, plaster, oils, gasoline, diesel fuel, paint thinner, turpentine, tar, roofing compound, or acid has been deposited in soil within a planting area.

B. Proceed with installation only after unsatisfactory conditions have been corrected.

C. If contamination by foreign or deleterious material or liquid is present in soil within a planting area, remove the soil and contamination as directed by Architect and replace with new planting soil.

3.02 PREPARATION

A. Protect structures, utilities, sidewalks, pavements, and other facilities, trees, shrubs, and turf areas from damage caused by mulching operations.

1. Protect adjacent and adjoining areas from hydromulching overspray.
2. Protect grade stakes set by others until directed to remove them.

B. Install erosion-control measures to prevent erosion or displacement of soils and discharge of soil-bearing water runoff or airborne dust to adjacent properties and walkways.

3.03 APPLICATION

A. Planted Areas:

1. Install weed-control barriers before mulching.
2. Mulch backfilled surfaces of planting areas and other areas indicated.

a. Organic Mulch in Planting Areas: Apply 4-inch average thickness of organic mulch extending 12 inches beyond edge of individual planting pit or trench and over whole surface of planting area, and finish level with adjacent finish grades. Do not place mulch within 3 inches of trunks or stems.
b. Aggregate Mulch in Planting Areas: Apply 3-inch average thickness of rock mulch over polyspun weed barrier fabric, overlap seams 12” and staple every 4 feet. Do not place mulch within 3 inches of trunks or stems.

3.04 CLEANUP AND PROTECTION

A. During mulching, keep adjacent paving and construction clean and work area in an orderly condition.

B. Protect plants from damage due to mulching operations. Treat, repair, or replace damaged plantings.

C. Promptly remove debris created by mulching work from paved areas. Clean wheels of vehicles before leaving site to avoid tracking mulch onto roads, walks, or other paved areas.

D. Erect temporary fencing or barricades and warning signs as required protecting newly mulched areas from traffic. Maintain fencing and barricades throughout initial maintenance period and remove after plantings are established.

3.05 DISPOSAL

A. Remove surplus mulch and waste material including trash, and debris and legally dispose of them off Owner's property.

END OF SECTION 329111

SECTION 329113

SOIL PREPARATION

PART 1 - GENERAL

1.01 RELATED DOCUMENTS

A. Drawings and general provisions of the Contract, including General and Supplementary Conditions and Division 01 Specification Sections, apply to this Section.

1.02 SUMMARY

A. Section includes planting soils specified by composition of the mixes.

B. Related Requirements:

1. Section 31 10 00 "Site Clearing" for topsoil stripping and stockpiling.
2. Section 32 92 00 "Turf and Grasses" for placing planting soil for turf and grasses.
3. Section 32 93 00 "Plants" for placing planting soil for plantings.

1.03 DEFINITIONS

A. Backfill: The earth used to replace or the act of replacing earth in an excavation. This can be amended or unamended soil as indicated.

B. CEC: Cation exchange capacity.

C. Compost: The product resulting from the controlled biological decomposition of organic material that has been sanitized through the generation of heat and stabilized to the point that it is beneficial to plant growth.

D. Duff Layer: A surface layer of soil, typical of forested areas, that is composed of mostly decayed leaves, twigs, and detritus.

E. Imported Soil: Soil that is transported to Project site for use.

F. Manufactured Soil: Soil produced by blending soils, sand, stabilized organic soil amendments, and other materials to produce planting soil.

G. NAPT: North American Proficiency Testing Program. An SSSA program to assist soil-, plant-, and water-testing laboratories through interlaboratory sample exchanges and statistical evaluation of analytical data.

H. Organic Matter: The total of organic materials in soil exclusive of undecayed plant and animal tissues, their partial decomposition products, and the soil biomass; also called "humus" or "soil organic matter."

I. Planting Soil: Existing, on-site soil; imported soil; or manufactured soil that has been modified as specified with soil amendments and perhaps fertilizers to produce a soil mixture best for plant growth.

J. Subgrade: Surface or elevation of subsoil remaining after excavation is complete, or the top surface of a fill or backfill before planting soil is placed.

K. Subsoil: Soil beneath the level of subgrade; soil beneath the topsoil layers of a naturally occurring soil profile, typified by less than 1 percent organic matter and few soil organisms.

L. Surface Soil: Soil that is present at the top layer of the existing soil profile. In undisturbed areas, surface soil is typically called "topsoil"; but in disturbed areas such as urban environments, the surface soil can be subsoil.

1.04 PREINSTALLATION MEETINGS

A. Preinstallation Conference: Conduct conference at Project site.

1.05 ACTION SUBMITTALS

A. Product Data: For each type of product.

1. Include recommendations for application and use.
2. Include test data substantiating that products comply with requirements.
3. Include sieve analyses for aggregate materials.
4. Material Certificates: For each type of imported soil soil amendment and fertilizer before delivery to the site, according to the following:

    a. Manufacturer's qualified testing agency's certified analysis of standard products.
    b. Analysis of fertilizers, by a qualified testing agency, made according to AAPFCO methods for testing and labeling and according to AAPFCO's SUIP #25.

B. Samples: For each bulk-supplied material, 1-quart volume of each in sealed containers labeled with content, source, and date obtained. Each Sample shall be typical of the lot of material to be furnished; provide an accurate representation of composition, color, and texture.

1.06 QUALITY ASSURANCE

A. Testing Agency Qualifications: An independent, state-operated, or university-operated laboratory; experienced in soil science, soil testing, and plant nutrition; with the experience and capability to conduct the testing indicated; and that specializes in types of tests to be performed.

1. Multiple Laboratories: At Contractor's option, work may be divided among qualified testing laboratories specializing in physical testing, chemical testing, and fertility testing.

1.07 PRECONSTRUCTION TESTING

A. Preconstruction Testing Service: Owner will engage Engage a qualified testing agency to perform preconstruction soil analyses on existing, on-site soil imported soil .

1. Notify Architect seven days in advance of the dates and times when laboratory samples will be taken.

B. Preconstruction Soil Analyses: For each unamended soil type, perform testing on soil samples and furnish soil analysis and a written report containing soil-amendment and fertilizer recommendations by a qualified testing agency performing the testing according to "Soil-Sampling Requirements" and "Testing Requirements" articles.

1. Have testing agency identify and label samples and test reports according to sample collection and labeling requirements.

1.08 SOIL-SAMPLING REQUIREMENTS

A. General: Extract soil samples according to requirements in this article.

B. Sample Collection and Labeling: Have samples taken and labeled by Contractor in presence of Architect under the direction of the testing agency.

1. Number and Location of Samples: Minimum of eight representative soil samples where directed by Architect for each soil to be used or amended for landscaping purposes.
2. Procedures and Depth of Samples: According to USDA-NRCS's "Field Book for Describing and Sampling Soils."
3. Division of Samples: Split each sample into two, equal parts. Send half to the testing agency and half to Owner for its records.
4. Labeling: Label each sample with the date, location keyed to a site plan or other location system, visible soil condition, and sampling depth.

1.09 TESTING REQUIREMENTS

A. General: Perform tests on soil samples according to requirements in this article.

B. Physical Testing:

1. Soil Texture: Soil-particle, size-distribution analysis by[one of] the following methods according to SSSA's "Methods of Soil Analysis - Part 1-Physical and Mineralogical Methods":

    a. Hydrometer Method: Report percentages of sand, silt, and clay.

2. Total Porosity: Calculate using particle density and bulk density according to SSSA's "Methods of Soil Analysis - Part 1-Physical and Mineralogical Methods."
3. Water Retention: According to SSSA's "Methods of Soil Analysis - Part 1-Physical and Mineralogical Methods."
4. Saturated Hydraulic Conductivity: According to SSSA's "Methods of Soil Analysis - Part 1-Physical and Mineralogical Methods"; at 85% compaction according to ASTM D 698 (Standard Proctor).

C. Organic-Matter Content: Analysis using loss-by-ignition method according to SSSA's "Methods of Soil Analysis - Part 3- Chemical Methods."

D. Recommendations: Based on the test results, state recommendations for soil treatments and soil amendments to be incorporated to produce satisfactory planting soil suitable for healthy, viable plants indicated. Include, at a minimum, recommendations for nitrogen, phosphorous, and potassium fertilization, and for micronutrients.

1. Fertilizers and Soil Amendment Rates: State recommendations in weight per 1000 sq. ft. for 6-inchdepth of soil.
2. Soil Reaction: State the recommended liming rates for raising pH or sulfur for lowering pH according to the buffered acidity or buffered alkalinity in weight per 1000 sq. ft. for 6-inchdepth of soil.

1.10 DELIVERY, STORAGE, AND HANDLING

A. Packaged Materials: Deliver packaged materials in original, unopened containers showing weight, certified analysis, name and address of manufacturer, and compliance with state and Federal laws if applicable.

B. Bulk Materials:

1. Do not dump or store bulk materials near structures, utilities, walkways and pavements, or on existing turf areas or plants.
2. Provide erosion-control measures to prevent erosion or displacement of bulk materials, discharge of soil-bearing water runoff, and airborne dust reaching adjacent properties, water conveyance systems, or walkways.
3. Do not move or handle materials when they are wet or frozen.
4. Accompany each delivery of bulk fertilizers and soil amendments with appropriate certificates.

PART 2 - PRODUCTS

2.01 PLANTING SOILS SPECIFIED BY COMPOSITION

A. General: Soil amendments, fertilizers, and rates of application specified in this article are guidelines that may need revision based on testing laboratory's recommendations after preconstruction soil analyses are performed.

B. Planting-Soil Type - Reused Topsoil: Existing, on-site surface soil, with the duff layer, if any, retained; and stockpiled on-site; modified to produce viable planting soil. Blend existing, on-site surface soil with the following soil amendments and fertilizers in the following quantities to produce planting soil:

1. Ratio of Loose Compost to Soil: as recommended by state analysis
2. Weight of Lime: as recommended by state analysis
3. Weight of Slow-Release Fertilizer: as recommended by state analysis

C. Planting-Soil Type - Additional Planters Mix: Imported, naturally formed soil from off-site sources and consisting of sandy loam soil according to USDA textures; and modified to produce viable planting soil.

1. Sources: Take imported, unamended soil from sources that are naturally well-drained sites where topsoil occurs at least 4 inches deep, not from bogs, or marshes; and that do not contain undesirable organisms; disease-causing plant pathogens; or obnoxious weeds and invasive plants including, but not limited to, quackgrass, Johnsongrass, poison ivy, nutsedge, nimblewill, Canada thistle, bindweed, bentgrass, wild garlic, ground ivy, perennial sorrel, and bromegrass.
2. Unacceptable Properties: Clean soil of the following:

    a. Unacceptable Materials: Concrete slurry, concrete layers or chunks, cement, plaster, building debris, oils, gasoline, diesel fuel, paint thinner, turpentine, tar, roofing compound, acid, and other extraneous materials that are harmful to plant growth.
    b. Unsuitable Materials: Stones, roots, plants, sod, clay lumps, and pockets of coarse sand that exceed a combined maximum of 8 percent by dry weight of the imported soil.
    c. Large Materials: Stones, clods, roots, clay lumps, and pockets of coarse sand exceeding 2 inches in any dimension.

3. Amended Soil Composition: Blend imported, unamended soil with the following soil amendments and fertilizers in the following quantities to produce planting soil:

    a. Ratio of Loose Compost to Soil: as recommended by state analysis
    b. Weight of Slow-Release Fertilizer: as recommended by state analysis

2.02 INORGANIC SOIL AMENDMENTS

A. Lime: ASTM C 602, agricultural liming material containing a minimum of 80 percent calcium carbonate equivalent and as follows:

1. Class: T, with a minimum of 99 percent passing through a No. 8sieve and a minimum of 75 percent passing through a No. 60 sieve.
2. Class: O, with a minimum of 95 percent passing through a No. 8sieve and a minimum of 55 percent passing through a No. 60 sieve.
3. Form: Provide lime in form of ground dolomitic limestone calcitic limestone mollusk shells Insert material.

B. Perlite: Horticultural perlite, soil amendment grade.

C. Agricultural Gypsum: Minimum 90 percent calcium sulfate, finely ground with 90 percent passing through a No. 50 sieve.

D. Sand: Clean, washed, natural or manufactured, free of toxic materials, and according to ASTM C 33/C 33M.

2.03 ORGANIC SOIL AMENDMENTS

A. Compost: Well-composted, stable, and weed-free organic matter produced by composting feedstock, and bearing USCC's "Seal of Testing Assurance," and as follows:

1. Reaction: pH of 5.5 to 8.
2. Organic-Matter Content: 6 percent of dry weight.
3. Particle Size: Minimum of 98 percent passing through a 1/2-inch sieve.

2.04 FERTILIZERS

A. Slow-Release Fertilizer: Granular or pelleted fertilizer consisting of 50 percent water-insoluble nitrogen, phosphorus, and potassium in the following composition:

1. Composition: Nitrogen, phosphorous, and potassium in amounts recommended in soil reports from a qualified testing agency.

PART 3 - EXECUTION

3.01 GENERAL

A. Place planting soil and fertilizers according to requirements in other Specification Sections.

B. Verify that no foreign or deleterious material or liquid such as paint, paint washout, concrete slurry, concrete layers or chunks, cement, plaster, oils, gasoline, diesel fuel, paint thinner, turpentine, tar, roofing compound, or acid has been deposited in planting soil.

C. Proceed with placement only after unsatisfactory conditions have been corrected.

3.02 PREPARATION OF UNAMENDED, ON-SITE SOIL BEFORE AMENDING

A. Excavation: Excavate soil from designated area(s) to a depth of 6 inches and stockpile until amended.

B. Unacceptable Materials: Clean soil of concrete slurry, concrete layers or chunks, cement, plaster, building debris, oils, gasoline, diesel fuel, paint thinner, turpentine, tar, roofing compound, acid, and other extraneous materials that are harmful to plant growth.

C. Unsuitable Materials: Clean soil to contain a maximum of 8 percent by dry weight of stones, roots, plants, sod, clay lumps, and pockets of coarse sand.

D. Screening: Pass unamended soil through a 2-inch sieve to remove large materials.

3.03 PLACING AND MIXING PLANTING SOIL OVER EXPOSED SUBGRADE

A. General: Apply and mix unamended soil with amendments on-site to produce required planting soil. Do not apply materials or till if existing soil or subgrade is frozen, muddy, or excessively wet.

B. Subgrade Preparation: Till subgrade to a minimum depth of 6 inches. Remove stones larger than 1-1/2 inches in any dimension and sticks, roots, rubbish, and other extraneous matter and legally dispose of them off Owner's property.

1. Apply, add soil amendments, and mix approximately half the thickness of unamended soil over prepared, loosened subgrade according to "Mixing" Paragraph below. Mix thoroughly into top 4 inches of subgrade. Spread remainder of planting soil.

C. Mixing: Spread unamended soil to total depth of 6 inches , but not less than required to meet finish grades after mixing with amendments and natural settlement. Do not spread if soil or subgrade is frozen, muddy, or excessively wet.

1. Amendments: Apply soil amendments, except compost, and fertilizer, if required, evenly on surface, and thoroughly blend them with unamended soil to produce planting soil.

a. Mix fertilizer with planting soil no more than seven days before planting.

D. Finish Grading: Grade planting soil to a smooth, uniform surface plane with loose, uniformly fine texture. Roll and rake, remove ridges, and fill depressions to meet finish grades.

3.04 BLENDING PLANTING SOIL IN PLACE

A. General: Mix amendments with in-place, unamended soil to produce required planting soil. Do not apply materials or till if existing soil or subgrade is frozen, muddy, or excessively wet.

B. Preparation: Till unamended, existing soil in planting areas to a minimum depth of of 6 inches. Remove stones larger than 1-1/2 inches in any dimension and sticks, roots, rubbish, and other extraneous matter and legally dispose of them off Owner's property.

C. Mixing: Apply soil amendments, except compost, and fertilizer, if required, evenly on surface, and thoroughly blend them into full depth of unamended, in-place soil to produce planting soil.

1. Mix lime with dry soil before mixing fertilizer.
2. Mix fertilizer with planting soil no more than seven days before planting.

D. Finish Grading: Grade planting soil to a smooth, uniform surface plane with loose, uniformly fine texture. Roll and rake, remove ridges, and fill depressions to meet finish grades.

3.05 APPLYING COMPOST TO SURFACE OF PLANTING SOIL

A. Application: Apply compost component of planting-soil mix at a ratio of 3 yrds./1000 sq. ft. to surface of in-place planting soil. Till to a depth of 6 inches, do not apply materials or till if existing soil or subgrade is frozen, muddy, or excessively wet.

B. Finish Grading: Grade surface to a smooth, uniform surface plane with loose, uniformly fine texture. Roll and rake, remove ridges, and fill depressions to meet finish grades.

3.06 FIELD QUALITY CONTROL

A. Testing Agency: Owner will engage Engage a qualified testing agency to perform tests and inspections.

B. Perform the following tests:

1. Compaction: Test planting-soil compaction after placing each lift and at completion using a densitometer or soil-compaction meter calibrated to a reference test value based on laboratory testing according to ASTM D 698. Space tests at no less than one for each 1000 sq. ft. of in-place soil or part thereof.

C. Soil will be considered defective if it does not pass tests and inspections.

D. Prepare test and inspection reports.

E. Label each sample and test report with the date, location keyed to a site plan or other location system, visible conditions when and where sample was taken, and sampling depth.

3.07 PROTECTION

A. Protection Zone: Identify protection zones according to Section 01 56 39 "Temporary Tree and Plant Protection."

B. Protect areas of in-place soil from additional compaction, disturbance, and contamination. Prohibit the following practices within these areas except as required to perform planting operations:

1. Storage of construction materials, debris, or excavated material.
2. Parking vehicles or equipment.
3. Vehicle traffic.
4. Excavation or other digging unless otherwise indicated.

C. If planting soil or subgrade is overcompacted, disturbed, or contaminated by foreign or deleterious materials or liquids, remove the planting soil and contamination; restore the subgrade as directed by Architect and replace contaminated planting soil with new planting soil.

3.08 CLEANING

A. Protect areas adjacent to planting-soil preparation and placement areas from contamination. Keep adjacent paving and construction clean and work area in an orderly condition.

B. Remove surplus soil and waste material including excess subsoil, unsuitable materials, trash, and debris and legally dispose of them off Owner's property unless otherwise indicated.

1. Dispose of excess subsoil and waste material including excess subsoil, unsuitable soil, trash, and debris and legally dispose of them off Owner's property.

END OF SECTION 32 91 13

SECTION 329200
TURF AND GRASSES

PART 1 - GENERAL

1.01 RELATED DOCUMENTS

A. Drawings and general provisions of the Contract, including General and Supplementary Conditions and Division 01 Specification Sections, apply to this Section.

1.02 SUMMARY

A. Section Includes prairie grasses and wildflowers.

B. Related Sections:

1. Division 31 Section "Site Clearing" for topsoil stripping and stockpiling.
2. Division 31 Section "Earth Moving" for excavation, filling and backfilling, and rough grading.
3. Section 32 01 90 "Operation And Maintenance Of Planting" for maintenance instructions and pesticide application.
4. Section 32 91 00 "Planting Preparation" for soil preparation, planting soil stabilization, and landscape grading.
5. Section 32 93 00 "Plants" for trees.

1.03 DEFINITIONS

A. Duff Layer: The surface layer of native topsoil that is composed of mostly decayed leaves, twigs, and detritus.

B. Finish Grade: Elevation of finished surface of planting soil.

C. Manufactured Topsoil: Soil produced off-site by homogeneously blending mineral soils or sand with stabilized organic soil amendments to produce topsoil or planting soil.

D. Pesticide: A substance or mixture intended for preventing, destroying, repelling, or mitigating a pest. This includes insecticides, miticides, herbicides, fungicides, rodenticides, and molluscicides. It also includes substances or mixtures intended for use as a plant regulator, defoliant, or desiccant.

E. Pests: Living organisms that occur where they are not desired or that cause damage to plants, animals, or people. These include insects, mites, grubs, mollusks (snails and slugs), rodents (gophers, moles, and mice), unwanted plants (weeds), fungi, bacteria, and viruses.

F. Planting Soil: Standardized topsoil; existing, native surface topsoil; existing, in-place surface soil; imported topsoil; or manufactured topsoil that is modified with soil amendments and perhaps fertilizers to produce a soil mixture best for plant growth.

G. Subgrade: Surface or elevation of subsoil remaining after excavation is complete, or top surface of a fill or backfill before planting soil is placed.

H. Subsoil: All soil beneath the topsoil layer of the soil profile, and typified by the lack of organic matter and soil organisms.

I. Surface Soil: Soil that is present at the top layer of the existing soil profile at the Project site. In undisturbed areas, the surface soil is typically topsoil, but in disturbed areas such as urban environments, the surface soil can be subsoil.

1.04 SUBMITTALS

A. Product Data: For each type of product indicated.

1. Pesticides and Herbicides: Include product label and manufacturer's application instructions specific to this Project.
2. Imported topsoil, organic matter, and fertilizers: Include product label and manufacturer's application instructions specific to this Project.
3. Fiber mulch: Include product label and manufacturer's application instructions specific to this Project.
4. Mycorrhizal Inoculum: Include product label and manufacturer's application instructions specific to this Project.

B. Certification of Grass Seed: From seed vendor for each grass-seed monostand or mixture stating the botanical and common name, percentage by weight of each species and variety, and percentage of purity, germination, and weed seed. Include the year of production and date of packaging.

C. Qualification Data: For qualified landscape Installer.

1.05 QUALITY ASSURANCE

A. Quality of Materials: Seed materials shall be subject to inspection and approval.

1. Architect reserves the right to reject, at any time or place prior to acceptance, work and seed which in the Architect's opinion fails to meet these Specification requirements.
2. Owner's Representative may make inspection periodically during seeding, at completion and at the end of warranty periods.

B. Installer Qualifications: A qualified landscape Installer whose work has resulted in successful prairie establishment.

1. Professional Membership: Installer shall be a member in good standing of either the Professional Landcare Network or the American Nursery and Landscape Association.
2. Installer's Field Supervision: Require Installer to maintain an experienced full-time supervisor on Project site when work is in progress.

C. Preinstallation Conference: Conduct conference at Project site.

1.06 DELIVERY, STORAGE, AND HANDLING

A. Sod: Harvest, deliver, store, and handle sod according to requirements in "Specifications for Turfgrass Sod Materials" and "Specifications for Turfgrass Sod Transplanting and Installation" in TPI's "Guideline Specifications to Turfgrass Sodding." Deliver sod in time for planting within 24 hours of harvesting. Protect sod from breakage and drying.

B. Seed:

1. Deliver seed in sealed standard containers, with seed tags stating scientific and variety name of all species, % germination, year of preparation for seeding, name of project and acreage to be seeded by this shipment and mixture of seed.
2. Seed damaged in transit or storage will not be accepted.

3. Notify Architect of delivery schedule in advance so that material may be inspected upon arrival at the project site as required. Seed tags are to be given to the Landscape Architect, Ecologist or Project supervisor.
4. Unacceptable material shall be removed immediately from project site.

C. Chemical Fertilizer:

1. Deliver chemical fertilizer to site in original unopened container bearing manufacturer's guaranteed chemical analysis, name, trade name, trademark and conformance to State law, bearing name and warranty of producer.

D. Bulk Materials:

1. Do not dump or store bulk materials near structures, utilities, walkways and pavements, or on existing grassed areas or plants.
2. Provide erosion-control measures to prevent erosion or displacement of bulk materials, discharge of soil-bearing water runoff, and airborne dust reaching adjacent properties, water conveyance systems, or walkways.

1.07 PROJECT CONDITIONS

A. Planting Restrictions: Plant during one of the following periods. Coordinate planting periods with initial maintenance periods to provide required maintenance from date of Substantial Completion.

1. Spring Planting: April 1 – June 30. Adjust for weather limitations and freezing conditions.
2. Fall Planting: September 1 – November 30. Adjust for weather limitations and freezing conditions.

B. Weather Limitations: Proceed with planting only when existing and forecasted weather conditions permit planting to be performed when beneficial and optimum results may be obtained. Apply products during favorable weather conditions according to manufacturer's written instructions.

C. Pesticide/Herbicide Coordination: If applicable, delay planting until each pesticide/herbicide is inactive, as recommended by the manufacturer.

1.08 WARRANTY

A. Seeded areas shall be warranted for two growing seasons to be in a healthy vigorous growing condition.

B. During original warranty period, seeded areas that die due to natural causes, failure of germination, erosion, etc., or in opinion of Architect are unhealthy, shall be replaced.

C. Such replacements shall be installed as specified, equal to original planting.

D. Should settling occur, fill and compact settled areas and reseed affected areas per grading and landscape plan.

PART 2 - PRODUCTS

2.01 TURFGRASS SOD

A. Turfgrass Type 1: Sod of grass species as follows, with not less than 95 percent germination, not less than 85 percent pure seed, and not more than 0.5 percent weed

seed:

1. Texas Hybrid Bluegrass (Kentucky x Texas).

2.02 FERTILIZER

A. Slow-Release Organic Fertilizer: Subject to compliance with requirements, products that may be incorporated into the Work include:

1. Biosol 6-1-3 Natural All Purpose fertilizer.
2. Sustane 5-2-4 All Natural Granulated Slow Release Nitrogen fertilizer.

2.03 MULCH

A. Bedding Straw:

1. Bedding straw shall be provided in 40-50 lb. bales, free of any materials considered sources of weed seed. No hay shall be used for any purpose on the project site. All straw shall be certified noxious weed free.

B. High Performance Flexible Growth Medium:

1. High Performance Flexible Growth Medium (HP-FGM) shall be hydraulically-applied, 100% biodegradable, manufactured in the United States and is composed of 100% recycled thermally refined (within a pressure vessel) wood fibers, crimped interlocking man-made biodegradable fibers, micro-pore granules, naturally derived crosslinked biopolymers and water absorbents. HP-FGM shall be phytosanitized, free from plastic netting, requires no curing period and upon application forms an intimate bond with the soil surface to create a continuous, porous, absorbent and flexible erosion resistant blanket that allows rapid germination and accelerated plant growth.

a. Preferred Manufacturer/Product:
1) Flexterra HP-FGM, by Profile Products, or approved equal.

2.04 MYCORRHIZAL INOCULUM

A. Mycorrhizal Inoculum shall be AM 120 Standard, or approved equal:

1. 100% Glomus intraradices (UT isolate)(120 propagules per c.c. or 100 propagules per gr.)

2.05 PESTICIDES / HERBICIDES

A. Pesticide: Registered and approved by EPA, acceptable to authorities having jurisdiction, and of type recommended by manufacturer for each specific problem and as required for Project conditions and application. Do not use restricted pesticides unless authorized in writing by authorities having jurisdiction.

1. Selection of Pesticide shall be contingent on, but not limited to, the following:
a. Identification of specific pest(s) to be prevented, destroyed, repelled, or mitigated.

B. Pre-Emergent Herbicide (Selective and/or Non-Selective): Effective for controlling the germination or growth of weeds within planted areas at the soil level directly below the mulch layer.

1. Selection of Pre-Emergent Herbicide(s) shall be contingent on, but not limited to,

the following:
a. Identification of specific weed(s) to be eradicated.
b. Identification of growth rate (at the time of application) required for herbicide to be effective, specific to each type of weed.
c. Location of weeds (slope, exposure, etc.).
d. Hydrology of the area (i.e., limitations due to possible contamination to wetlands, subsurface water sources, etc.).
e. Soil type(s).
f. Application type (spot versus broadcast).

C. Post-Emergent Herbicide (Selective and/or Non-Selective): Effective for controlling weed growth that has already germinated.

1. Selection of Post-Emergent Herbicide(s) shall be contingent on, but limited to, the following:
a. Identification of specific weed(s) to be eradicated.
b. Identification of growth rate (at the time of application) required for herbicide to be effective, specific to each type of weed.
c. Location of weeds (slope, exposure, etc.).
d. Hydrology of the area (i.e., limitations due to possible contamination to wetlands, subsurface water sources, etc.).
e. Soil type(s).
f. Application type (spot versus broadcast).
g. Identification of plants to be saved.

D. Detention Basin & Drainage Seed Mix:

COMMON	SCIENTIFIC NAME	VARIETY	PLS POUNDS / 1000 sq.ft.
Buffalograss	Buchloe dactyloides	Topgun	0.25
Nebraska sedge	Carex nebrascensis	native	0.1
Inland saltgrass	Disticlis stricta	native	0.25
Alkali sacaton	Sporobolus airoides	native	0.25
Switchgrass	Panicum virgatum	Blackwell	0.5
TOTAL POUNDS/ SQ FT			1.35

PART 3 - EXECUTION

3.01 EXAMINATION

A. Examine areas to be planted for compliance with requirements and other conditions affecting performance.

1. Verify that no foreign or deleterious material or liquid such as paint, paint washout, concrete slurry, concrete layers or chunks, cement, plaster, oils, gasoline, diesel fuel, paint thinner, turpentine, tar, roofing compound, or acid has been deposited in soil within a planting area.
2. Do not mix or place soils and soil amendments in frozen, wet, or muddy conditions.
3. Suspend soil spreading, grading, and tilling operations during periods of excessive soil moisture until the moisture content reaches acceptable levels to attain the required results.
4. Uniformly moisten excessively dry soil that is not workable and which is too dusty.

A. Proceed with installation only after unsatisfactory conditions have been corrected.

B. If contamination by foreign or deleterious material or liquid is present in soil within a planting area, remove the soil and contamination as directed by Architect and replace with new planting soil.

3.02 PREPARATION

A. Protect structures, utilities, sidewalks, pavements, and other facilities, trees, shrubs, and plantings from damage caused by planting operations.

1. Protect adjacent and adjoining areas from hydroseeding and hydromulching overspray.
2. Protect grade stakes set by others until directed to remove them.

B. Install erosion-control measures to prevent erosion or displacement of soils and discharge of soil-bearing water runoff or airborne dust to adjacent properties and walkways.

C. Decompact any construction traffic, or staging areas prior to topsoiling by tilling to 12 inches.

D. Layout of seeding areas is indicated on the Drawings. Verify locations with Landscape Architect or Project Supervisor prior to starting seeding operations.

E. Base Preparation/Grading:

1. Protect existing surface and underground features and improvements from damage.
2. Restore seed areas to specified condition if damaged after finish grading. No seeding shall occur until the Architect has accepted the base preparation.
3. Protect grade stakes set by others until directed to remove them.

F. See Division 32 Section "Planting Preparation" for soil preparation, planting soil stabilization, and landscape grading.

G. Moisten prepared area before planting if soil is dry. Water thoroughly and allow surface to dry before planting. Do not create muddy soil.

3.03 FERTILIZING

A. Apply fertilizer as specified in Section 32 91 00 Planting Preperation. Biosol is the preferred fertizer for native seeded areas and it should be applied prior to hydromulching. All seeding types shall have Biosol applied at a rate of 800 pounds/acre.

3.04 SEEDING

A. Drill seeded areas shall use a Truax or other native grass drill with separate seed boxes for different seed sizes, agitators in the boxes, Coulter wheels, depth bands, seed rows no wider than 7 inches. Seed shall be drilled in two applications at 90 degrees to each other, 50 percent plus or minus of seed applied in each pass using a Brillion seed application or approved equal.

1. Seed shall be drilled parallel to the slope in the final pass.
2. Set depth bands to 1/4 to 1/3 inch depth. Seed shall be drilled in such a manner that after surface is raked and rolled, seed shall have about 1/4 of cover.
3. Seed shall not be drilled during windy weather or when ground is frozen or snow covered or untillable.
4. Seeding schedule to be coordinated with Owner, Contractor and Architect to ensure optimal success.
5. Rake seeded areas to ensure good soil contact, raking always in direction perpendicular to slope of the land.
6. Application Rate: shall be as indicated on the seed mix tables.

B. Areas inaccessible to drilling equipment may be seeded by broadcasting using a mechanical spreader or by hand.

1. Rake to cover seed with 1/4 to 1/3 inch soil.
2. Application Rate: shall be two times the drill seed rate.

3.05 MULCHING

A. Slopes < 5:1:

1. Protect seeded areas by spreading straw mulch. Spread uniformly at a minimum rate of 2 tons/acre (42 kg/92.9 sq. m) to form a continuous blanket 1-1/2 inches (38 mm) in loose thickness over seeded areas. Spread by hand, blower, or other suitable equipment.

a. Anchor straw mulch by crimping into soil with suitable mechanical equipment.

B. Slopes ≥ 5:1 :

1. High Performance Flexible Growth Medium (HP-FGM) to be applied to seeded areas where slopes are greater than or equal to (≥) 5:1. Apply HP-FGM at the following application rates:

    a. ≤ 5:1 slope: 2,500 pounds per acre.
    b. > 5:1 slope and ≤ 3:1 slope: 3,000 pounds per acre.
    c. ≥ 3:1 slope and ≤ 2:1 slope: 3,500 pounds per acre.

C. Hydromulching shall not be done during or after rainstorms, when water is standing or when runoff is occurring or when below freezing, or in the presence of snow.

3.06 MYCORRHIZAL INOCULUM

A. Apply Mycorrhizal Inoculum, per manufacturer's recommendations, at a rate of 60lbs. per acre (67.5 kg/ha)/1.4 lbs. per 1,000 ft²(0.7 kg / 100 m²), by the following methods (as applicable):

1. Seed Drilling: Incorporate into the soil at a depth ranger at or below the seed.
2. Broadcast and Till: Evenly distribute across seedbed after seeding. Cover the exposed seed and inoculum by harrowing, chain dragging or applying an organic topdressing. Do not leave inoculum exposed to sunlight for more than four hours.
3. Nursery Medium: Evenly blend at 5 lbs per yd³ (3 kg. Per m³). 1 lb. (454 grams) contains approximately 60,000 living propagules. Rate provides 300,000 living propagules per yd³ (396,000 living propagules per m³) or 6.5 living propagules per in³.

3.07 TURF AREA PREPARATION

A. Limit turf subgrade preparation to areas to be planted.

B. Newly Graded Subgrades: Loosen subgrade to a minimum depth of 12 inches (300 mm). Remove stones larger than 1 inch (25 mm) in any dimension and sticks, roots, rubbish, and other extraneous matter and legally dispose of them off Owner's property.

1. Spread topsoil, apply soil amendments and fertilizer on surface, and thoroughly blend planting soil.

    a. Delay mixing fertilizer with planting soil if planting will not proceed within a few days.
    b. Mix lime, if required, with dry soil before mixing fertilizer.

2. Spread planting soil to a depth of 6 inches (150 mm) but not less than required to meet finish grades after light rolling and natural settlement. Do not spread if planting soil or subgrade is frozen, muddy, or excessively wet.

    a. Spread approximately 1/2 the thickness of planting soil over loosened subgrade. Mix thoroughly into top 4 inches (100 mm) of subgrade. Spread remainder of planting soil.

C. Unchanged Subgrades: If turf is to be planted in areas unaltered or undisturbed by excavating, grading, or surface-soil stripping operations, prepare surface soil as follows:

1. Remove existing grass, vegetation, and turf. Do not mix into surface soil.
2. Loosen surface soil to a depth of at least 6 inches (150 mm). Apply soil amendments and fertilizers according to planting soil mix proportions and mix

thoroughly into top 4 inches (100 mm) of soil. Till soil to a homogeneous mixture of fine texture.

3. Remove stones larger than 1 inch (25 mm) in any dimension and sticks, roots, trash, and other extraneous matter.
4. Legally dispose of waste material, including grass, vegetation, and turf, off Owner's property.

D. Finish Grading: Grade planting areas to a smooth, uniform surface plane with loose, uniformly fine texture. Grade to within plus or minus 1/2 inch (13 mm) of finish elevation. Roll and rake, remove ridges, and fill depressions to meet finish grades. Limit finish grading to areas that can be planted in the immediate future.

E. Moisten prepared area before planting if soil is dry. Water thoroughly and allow surface to dry before planting. Do not create muddy soil.

F. Before planting, obtain Architect's acceptance of finish grading; restore planting areas if eroded or otherwise disturbed after finish grading.

3.08 SODDING

A. Lay sod within 24 hours of harvesting. Do not lay sod if dormant or if ground is frozen or muddy.

B. Lay sod to form a solid mass with tightly fitted joints. Butt ends and sides of sod; do not stretch or overlap. Stagger sod strips or pads to offset joints in adjacent courses. Avoid damage to subgrade or sod during installation. Tamp and roll lightly to ensure contact with subgrade, eliminate air pockets, and form a smooth surface. Work sifted soil or fine sand into minor cracks between pieces of sod; remove excess to avoid smothering sod and adjacent grass.

1. Lay sod across angle of slopes exceeding 1:3.
2. Anchor sod on slopes exceeding 1:6 with wood pegs or steel staples spaced as recommended by sod manufacturer but not less than 2 anchors per sod strip to prevent slippage.

C. Saturate sod with fine water spray within two hours of planting. During first week after planting, water daily or more frequently as necessary to maintain moist soil to a minimum depth of 1-1/2 inches (38 mm) below sod.

3.09 MAINTENANCE AND ACCEPTANCE

A. Maintenance period shall begin immediately after each area is seeded, and continue until final acceptance of landscaping work. Upon acceptance of landscaping work, the maintenance period shall extend to 30 days from the delivery date of the project.

B. During this time water, mow, spot spray with approved herbicides (after seedlings are no longer sensitive to them), hand weed, as necessary to insure that seeded areas are in a vigorous growing condition until final acceptance.

C. Bare areas over 1 square feet in size shall be reseeded and mulched if they fail to establish at least 6 desirable seedlings/sq. ft. (non-irrigated areas) or 12 desirable seedlings/sq. ft. (irrigated areas). The Landscape Architect or Ecologist will direct Contractor on what areas need to be reseeded during establishment inspection approximately 30 days after seeding (June-September).

D. Seeded areas shall be mowed for annual weed control, if so directed by the Landscape Architect, at a height of not less than 3 inch and otherwise maintained until there is an acceptable uniform plant growth. A small tractor or mower shall be

used to reduce possible crushing of seedling grasses and rutting of soil.

E. Areas that are irrigated and are not producing a uniform plant growth within 30 days following first seeding, as determined by establishment inspection, shall be reseeded.

F. Acceptable uniform plant growth shall be defined as the following, whichever is the more strict:

1. 70% of predisturbance vegetative cover.
2. At least 6 desirable seedlings/sq. ft. (non-irrigated areas) or 12 desirable seedlings/sq. ft. (in irrigated areas). Scattered bare spots, no greater than 1 sq. ft. and not exceeding 5 percent of seeded area may be acceptable, if approved by Landscape Architect or Ecologist.

3.10 CLEANING

A. Promptly remove soil and debris created by turf work from paved areas. Clean wheels of vehicles before leaving site to avoid tracking soil onto roads, walks, or other paved areas.

B. Erect temporary fencing or barricades and warning signs as required to protect newly planted areas from traffic. Maintain fencing and barricades throughout initial maintenance period and remove after plantings are established.

C. Remove nondegradable erosion-control measures after grass establishment period.

END OF SECTION 32 92 00

SECTION 329300

PLANTS

PART 1 - GENERAL

1.01 SUMMARY

A. Section Includes:

1. Plants including the following:

a. Trees.
b. Shrubs.
c. Groundcovers
2. Weeds barriers.
3. Pesticides.
4. Tree stabilization.
5. Landscape edgings.

1.02 DEFINITIONS

A. Backfill: The earth used to replace or the act of replacing earth in an excavation.

B. Balled and Burlapped Stock: Plants dug with firm, natural balls of earth in which they were grown, with a ball size not less than diameter and depth recommended by ANSI Z60.1 for type and size of plant required; wrapped with burlap, tied, rigidly supported, and drum laced with twine with the root flare visible at the surface of the ball as recommended by ANSI Z60.1.

C. Container-Grown Stock: Healthy, vigorous, well-rooted plants grown in a container, with a well-established root system reaching sides of container and maintaining a firm ball when removed from container. Container shall be rigid enough to hold ball shape and protect root mass during shipping and be sized according to ANSI Z60.1 for type and size of plant required.

D. Finish Grade: Elevation of finished surface of planting soil.

E. Pesticide: A substance or mixture intended for preventing, destroying, repelling, or mitigating a pest. Pesticides include insecticides, miticides, herbicides, fungicides, rodenticides, and molluscicides. They also include substances or mixtures intended for use as a plant regulator, defoliant, or desiccant. Some sources classify herbicides separately from pesticides.

F. Pests: Living organisms that occur where they are not desired or that cause damage to plants, animals, or people. Pests include insects, mites, grubs, mollusks (snails and slugs), rodents (gophers, moles, and mice), unwanted plants (weeds), fungi, bacteria, and viruses.

G. Planting Area: Areas to be planted.

H. Planting Soil: Existing, on-site soil; imported soil; or manufactured soil that has been modified with soil amendments and perhaps fertilizers to produce a soil mixture best for plant growth. See Section 32 91 13 "Soil Preparation" for drawing designations for planting soils.

I. Plant; Plants; Plant Material: These terms refer to vegetation in general, including trees, shrubs, vines, ground covers, ornamental grasses, bulbs, corms, tubers, or herbaceous vegetation.

J. Root Flare: Also called "trunk flare." The area at the base of the plant's stem or trunk where the stem or trunk broadens to form roots; the area of transition between the root system and the stem or trunk.

K. Stem Girdling Roots: Roots that encircle the stems (trunks) of trees below the soil surface.

L. Subgrade: The surface or elevation of subsoil remaining after excavation is complete, or the top surface of a fill or backfill before planting soil is placed.

1.03 COORDINATION

A. Coordination with Turf Areas (Lawns): Plant trees, shrubs, and other plants after finish grades are established and before planting turf areas unless otherwise indicated.

1. When planting trees, shrubs, and other plants after planting turf areas, protect turf areas, and promptly repair damage caused by planting operations.

1.04 DELIVERY, STORAGE, AND HANDLING

A. Packaged Materials: Deliver packaged materials in original, unopened containers showing weight, certified analysis, name and address of manufacturer, and indication of compliance with state and Federal laws if applicable.

B. Bulk Materials:

1. Do not dump or store bulk materials near structures, utilities, walkways and pavements, or on existing turf areas or plants.
2. Provide erosion-control measures to prevent erosion or displacement of bulk materials; discharge of soil-bearing water runoff; and airborne dust reaching adjacent properties, water conveyance systems, or walkways.
3. Accompany each delivery of bulk materials with appropriate certificates.

C. Do not prune trees and shrubs before delivery. Protect bark, branches, and root systems from sun scald, drying, wind burn, sweating, whipping, and other handling and tying damage. Do not bend or bind-tie trees or shrubs in such a manner as to destroy their natural shape. Provide protective covering of plants during shipping and delivery. Do not drop plants during delivery and handling.

D. Handle planting stock by root ball.

E. Store bulbs, corms, and tubers in a dry place at 60 to 65 deg F until planting.

F. Wrap trees and shrubs with burlap fabric over trunks, branches, stems, twigs, and foliage to protect from wind and other damage during digging, handling, and transportation.

G. Deliver plants after preparations for planting have been completed, and install immediately. If planting is delayed more than six hours after delivery, set plants and trees in their appropriate aspect (sun, filtered sun, or shade), protect from weather and mechanical damage, and keep roots moist.

1. Set balled stock on ground and cover ball with soil, peat moss, sawdust, or other acceptable material.
2. Do not remove container-grown stock from containers before time of planting.
3. Water root systems of plants stored on-site deeply and thoroughly with a fine-mist spray. Water as often as necessary to maintain root systems in a moist, but not overly wet condition.

1.05 FIELD CONDITIONS

A. Field Measurements: Verify actual grade elevations, service and utility locations, irrigation system components, and dimensions of plantings and construction contiguous with new plantings by field measurements before proceeding with planting work.

B. Weather Limitations: Proceed with planting only when existing and forecasted weather conditions permit planting to be performed when beneficial and optimum results may be obtained. Apply products during favorable weather conditions according to manufacturer's written instructions and warranty requirements.

PART 2 - PRODUCTS

2.01 PLANT MATERIAL

A. General: Furnish nursery-grown plants true to genus, species, variety, cultivar, stem form, shearing, and other features indicated in Plant List, Plant Schedule, or Plant Legend indicated on Drawings and complying with ANSI Z60.1; and with healthy root systems developed by transplanting or root pruning. Provide well-shaped, fully branched, healthy, vigorous stock, densely foliated when in leaf and free of disease, pests, eggs, larvae, and defects such as knots, sun scald, injuries, abrasions, and disfigurement. All Plant Material shall be derived from local Zone sources indigenous to the El Paso Landscape Zone per ANSI and must be grown or stored for at least one growing season in the stipulated zone.

1. Trees with damaged, crooked, or multiple leaders; tight vertical branches where bark is squeezed between two branches or between branch and trunk ("included bark"); crossing trunks; cut-off limbs more than 3/4 inch in diameter; or with stem girdling roots are unacceptable.
2. Collected Stock: Do not use plants harvested from the wild, from native stands, from an established landscape planting, or not grown in a nursery unless otherwise indicated.

B. Provide plants of sizes, grades, and ball or container sizes complying with ANSI Z60.1 for types and form of plants required. Plants of a larger size may be used if acceptable to Architect, with a proportionate increase in size of roots or balls.

C. Root-Ball Depth: Furnish trees shrubs with root balls measured from top of root ball, which begins at root flare according to ANSI Z60.1. Root flare shall be visible before planting.

D. Labeling: Label at least one plant of each variety, size, and caliper with a securely attached, waterproof tag bearing legible designation of common name and full scientific name, including genus and species. Include nomenclature for hybrid, variety, or cultivar, if applicable for the plant.

E. If formal arrangements or consecutive order of plants is indicated on Drawings, select stock for uniform height and spread, and number the labels to assure symmetry in planting.

2.02 MULCHES

A. Organic Mulch: Free from deleterious materials and suitable as a top dressing of trees and shrubs, consisting of the following[, and in location(s) indicated on Drawings]:

1. Shredded hardwood.

a. Size Range: 3 inches maximum, 1/2 inch minimum.

b. Color: Natural .

2. Ground or shredded bark.

a. Size Range: 3 inches maximum, 1/2 inch minimum.
b. Color: Natural .

2.03 WEED-CONTROL BARRIERS

A. Nonwoven Geotextile Filter Fabric: Polypropylene or polyester fabric, 3 oz./sq. yd. minimum, composed of fibers formed into a stable network so that fibers retain their relative position. Fabric shall be inert to biological degradation and resist naturally encountered chemicals, alkalis, and acids.

2.04 PESTICIDES

A. General: Pesticide registered and approved by the EPA, acceptable to authorities having jurisdiction, and of type recommended by manufacturer for each specific problem and as required for Project conditions and application. Do not use restricted pesticides unless authorized in writing by authorities having jurisdiction.

B. Pre-Emergent Herbicide (Selective and Nonselective): Effective for controlling the germination or growth of weeds within planted areas at the soil level directly below the mulch layer.

C. Post-Emergent Herbicide (Selective and Nonselective): Effective for controlling weed growth that has already germinated.

2.05 TREE-STABILIZATION MATERIALS

A. Trunk-Stabilization Materials:

1. Upright and Guy Stakes: Rough-sawn, sound, new [hardwood] [softwood with specified wood pressure-preservative treatment], free of knots, holes, cross grain, and other defects, 2-by-2-inch nominal by length indicated, pointed at one end.
2. Guys and Tie Wires: ASTM A 641/A 641M, Class 1, galvanized-steel wire, two-strand, twisted, 0.106 inch in diameter.
3. Tree-Tie Webbing: UV-resistant polypropylene or nylon webbing with brass grommets.

B. Root-Ball Stabilization Materials:

1. Proprietary Root-Ball Stabilization Devices: Proprietary at- or below-grade stabilization systems to secure each new planting by root ball and that do not encircle the trunk; sized according to manufacturer's written recommendations unless otherwise indicated.

a. Products: Subject to compliance with requirements, provide one of the following:

1) Border Concepts, Inc; Tomahawk Tree Stabilizers.
2) Foresight Products, LLC; Duckbill Rootball Fixing System.
3) Tree Staple, Inc; Tree Staples.

2.06 LANDSCAPE EDGINGS

A. Steel Edging: Standard commercial-steel edging, fabricated in sections of standard lengths, with loops stamped from or welded to face of sections to receive stakes, 2 feet on center minimum.

1. Basis-of-Design Product: Subject to compliance with requirements, provide product indicated on Drawings or comparable product by one of the following:

a. Border Concepts, Inc.
b. Collier Metal Specialties, Inc.
c. Russell, J. D. Company (The).
d. Sure-loc Edging Corporation.

2. Edging Size: 1/8 inch thick by 6 inches deep .
3. Stakes: Tapered steel, a minimum of 12 inches long.
4. Accessories: Standard tapered ends, corners, and splicers.
5. Finish: Manufacturer's standard paint.

a. Paint Color: Black.

PART 3 - EXECUTION

3.01 EXAMINATION

A. Examine areas to receive plants, with Installer present, for compliance with requirements and conditions affecting installation and performance of the Work.

1. Verify that no foreign or deleterious material or liquid such as paint, paint washout, concrete slurry, concrete layers or chunks, cement, plaster, oils, gasoline, diesel fuel, paint thinner, turpentine, tar, roofing compound, or acid has been deposited in soil within a planting area.
2. Verify that plants and vehicles loaded with plants can travel to planting locations with adequate overhead clearance.
3. Suspend planting operations during periods of excessive soil moisture until the moisture content reaches acceptable levels to attain the required results.
4. Uniformly moisten excessively dry soil that is not workable or which is dusty.

B. If contamination by foreign or deleterious material or liquid is present in soil within a planting area, remove the soil and contamination as directed by Architect and replace with new planting soil.

C. Proceed with installation only after unsatisfactory conditions have been corrected.

3.02 PREPARATION

A. Protect structures, utilities, sidewalks, pavements, and other facilities and turf areas and existing plants from damage caused by planting operations.

B. Install erosion-control measures to prevent erosion or displacement of soils and discharge of soil-bearing water runoff or airborne dust to adjacent properties and walkways.

C. Lay out individual tree and shrub locations and areas for multiple plantings. Stake locations, outline areas, adjust locations when requested, and obtain Architect's acceptance of layout before excavating or planting. Make minor adjustments as required.

D. Lay out plants at locations directed by Architect. Stake locations of individual trees and shrubs and outline areas for multiple plantings.

3.03 PLANTING AREA ESTABLISHMENT

A. General: Prepare planting area for soil placement and mix planting soil according to Section 32 91 13 "Soil Preparation."

B. Placing Planting Soil: Place manufactured planting soil over exposed subgrade.

C. Before planting, obtain Architect's acceptance of finish grading; restore planting areas if eroded or otherwise disturbed after finish grading.

3.04 EXCAVATION FOR TREES SHRUBS

A. Planting Pits and Trenches: Excavate circular planting pits.

1. Balled and Burlapped Stock: Excavate approximately three times as wide as ball diameter.
2. Container-Grown Stock: Excavate approximately three times as wide as ball diameter.

B. Backfill Soil: Subsoil and topsoil removed from excavations [may] [may not] be used as backfill soil unless otherwise indicated.

C. Obstructions: Notify Architect if unexpected rock or obstructions detrimental to trees or shrubs are encountered in excavations.

1. Hardpan Layer: Drill 6-inch- diameter holes, 24 inchesapart, into free-draining strata or to a depth of 10 feet, whichever is less, and backfill with free-draining material.

D. Drainage: Notify Architect if subsoil conditions evidence unexpected water seepage or retention in tree or shrub planting pits.

E. Fill excavations with water and allow to percolate away before positioning trees and shrubs.

3.05 TREE SHRUB VINE PLANTING

A. Inspection: At time of planting, verify that root flare is visible at top of root ball according to ANSI Z60.1. If root flare is not visible, remove soil in a level manner from the root ball to where the top-most root emerges from the trunk. After soil removal to expose the root flare, verify that root ball still meets size requirements.

B. Roots: Remove stem girdling roots and kinked roots. Remove injured roots by cutting cleanly; do not break.

C. Balled and Burlapped Stock: Set each plant plumb and in center of planting pit or trench with root flare 1 inch above adjacent finish grades.

1. Backfill: Planting soil . For trees, use excavated soil for backfill.
2. After placing some backfill around root ball to stabilize plant, carefully cut and remove burlap, rope, and wire baskets from tops of root balls and from sides, but do not remove from under root balls. Remove pallets, if any, before setting. Do not use planting stock if root ball is cracked or broken before or during planting operation.
3. Backfill around root ball in layers, tamping to settle soil and eliminate voids and air pockets. When planting pit is approximately one-half filled, water thoroughly before placing remainder of backfill. Repeat watering until no more water is absorbed.
4. Continue backfilling process. Water again after placing and tamping final layer of soil.

D. Container-Grown Stock: Set each plant plumb and in center of planting pit or trench with root flare 1 inch above adjacent finish grades.

1. Backfill: Planting soil . For trees, use excavated soil for backfill.
2. Carefully remove root ball from container without damaging root ball or plant.
3. Backfill around root ball in layers, tamping to settle soil and eliminate voids and air pockets. When planting pit is approximately one-half filled, water thoroughly before placing remainder of backfill. Repeat watering until no more water is absorbed.
4. Continue backfilling process. Water again after placing and tamping final layer of soil.

E. Slopes: When planting on slopes, set the plant so the root flare on the uphill side is flush with the surrounding soil on the slope; the edge of the root ball on the downhill side will be above the surrounding soil. Apply enough soil to cover the downhill side of the root ball.

3.06 TREE SHRUB PRUNING

A. Remove only dead, dying, or broken branches. Do not prune for shape.

B. Prune, thin, and shape trees, shrubs, and vines according to standard professional horticultural and arboricultural practices. Unless otherwise indicated by Architect, do not cut tree leaders; remove only injured, dying, or dead branches from trees and shrubs; and prune to retain natural character.

C. Do not apply pruning paint to wounds.

3.07 TREE STABILIZATION

A. Trunk Stabilization by Upright Staking and Tying: Install trunk stabilization as follows unless otherwise indicated:

1. Upright Staking and Tying:

    a. Stake trees of 2- through 5-inch caliper. Stake trees of less than 2-inch caliper only as required to prevent wind tip out. Use a minimum of two stakes of length required to penetrate at least 18 inches below bottom of backfilled excavation and to extend at least 60 inches above grade. Set vertical stakes and space to avoid penetrating root balls or root masses.
    b. Stake trees with two stakes for trees up to 12 feet high and 2-1/2 inches or less in caliper; three stakes for trees less than 14 feet high and up to 4 inches in caliper. Space stakes equally around trees.
2. Support trees with two strands of tie wire, connected to the brass grommets of tree-tie webbing at contact points with tree trunk. Allow enough slack to avoid rigid restraint of tree.

B. Root-Ball Stabilization: Install at- or below-grade stabilization system to secure each new planting by the root ball unless otherwise indicated.

1. Proprietary Root-Ball Stabilization Device: Install root-ball stabilization system sized and positioned as recommended by manufacturer unless otherwise indicated and according to manufacturer's written instructions.

3.08 ROOT-BARRIER INSTALLATION

A. Install root barrier where trees are planted within 48 inches of paving or other hardscape elements, such as walls, curbs, and walkways, unless otherwise indicated on Drawings.

B. Align root barrier vertically, and run it linearly along and adjacent to the paving or other hardscape elements to be protected from invasive roots.

C. Install root barrier continuously for a distance of 60 inches in each direction from the tree trunk, for a total distance of 10 feet per tree. If trees are spaced closer, use a single continuous piece of root barrier.

1. Position top of root barrier according to manufacturer's written recommendations.
2. Overlap root barrier a minimum of 12 inches at joints.
3. Do not distort or bend root barrier during construction activities.
4. Do not install root barrier surrounding the root ball of tree.

3.09 GROUND COVER AND PLANT PLANTING

A. Set out and space ground cover and plants other than trees, shrubs, and vines as indicated on Drawings in even rows with triangular spacing.

B. Use planting soil for backfill.

C. Dig holes large enough to allow spreading of roots.

D. For rooted cutting plants supplied in flats, plant each in a manner that minimally disturbs the root system but to a depth not less than two nodes.

E. Work soil around roots to eliminate air pockets and leave a slight saucer indentation around plants to hold water.

F. Water thoroughly after planting, taking care not to cover plant crowns with wet soil.

G. Protect plants from hot sun and wind; remove protection if plants show evidence of recovery from transplanting shock.

3.10 PLANTING AREA MULCHING

A. Install weed-control barriers before mulching according to manufacturer's written instructions. Completely cover area to be mulched, overlapping edges a minimum of 6 inches and secure seams with galvanized pins.

B. Mulch backfilled surfaces of planting areas and other areas indicated.

1. Organic Mulch:

a. In Planting Areas: Apply 4 inches average thickness of organic mulch over whole surface of planting area, and finish level with adjacent finish grades. Do not place mulch within 3 inches of trunks or stems.
b. Around Trees and Treelike Shrubs in Turf Areas: Apply mulch ring of 3-inch average thickness, with 36-inch radius around trunks or stems. Do not place mulch within 3 inches of trunks or stems.

3.11 EDGING INSTALLATION

A. Steel Edging: Install steel edging where indicated according to manufacturer's written instructions. Anchor with steel stakes spaced approximately 30 inches apart, driven below top elevation of edging.

3.12 PLANT MAINTENANCE

A. Maintain plantings by pruning, cultivating, watering, weeding, fertilizing, mulching, restoring planting saucers, adjusting and repairing tree-stabilization devices, resetting to proper grades or vertical position, and performing other operations as required to establish healthy, viable plantings.

B. Fill in, as necessary, soil subsidence that may occur because of settling or other processes. Replace mulch materials damaged or lost in areas of subsidence.

C. Apply treatments as required to keep plant materials, planted areas, and soils free of pests and pathogens or disease. Use integrated pest management practices when possible to minimize use of pesticides and reduce hazards. Treatments include physical controls such as hosing off foliage, mechanical controls such as traps, and biological control agents.

3.13 PESTICIDE APPLICATION

A. Apply pesticides and other chemical products and biological control agents according to authorities having jurisdiction and manufacturer's written recommendations. Coordinate applications with Owner's operations and others in proximity to the Work. Notify Owner before each application is performed.

B. Pre-Emergent Herbicides (Selective and Nonselective): Apply to tree, shrub, and ground-cover areas according to manufacturer's written recommendations. Do not apply to seeded areas.

C. Post-Emergent Herbicides (Selective and Nonselective): Apply only as necessary to treat already-germinated weeds and according to manufacturer's written recommendations.

3.14 REPAIR AND REPLACEMENT

A. General: Repair or replace existing or new trees and other plants that are damaged by construction operations, in a manner approved by Architect.

1. Submit details of proposed pruning and repairs.
2. Perform repairs of damaged trunks, branches, and roots within 24 hours, if approved.
3. Replace trees and other plants that cannot be repaired and restored to full-growth status, as determined by Architect.

B. Remove and replace trees that are more than 25 percent dead or in an unhealthy condition before the end of the corrections period or are damaged during construction operations that Architect determines are incapable of restoring to normal growth pattern.

1. Provide new trees of same size as those being replaced for each tree of 4 inches or smaller in caliper size.
2. Provide two new tree(s) of 3-inch caliper size for each tree being replaced that measures more than 6 inches in caliper size.
3. Species of Replacement Trees: Species selected by Architect.

3.15 CLEANING AND PROTECTION

A. During planting, keep adjacent paving and construction clean and work area in an orderly condition. Clean wheels of vehicles before leaving site to avoid tracking soil onto roads, walks, or other paved areas.

B. Remove surplus soil and waste material including excess subsoil, unsuitable soil, trash, and debris and legally dispose of them off Owner's property.

C. Protect plants from damage due to landscape operations and operations of other contractors and trades. Maintain protection during installation and maintenance periods. Treat, repair, or replace damaged plantings.

D. After installation and before Substantial Completion, remove nursery tags, nursery stakes, tie tape, labels, wire, burlap, and other debris from plant material, planting areas, and Project site.

3.16 MAINTENANCE SERVICE

A. Maintenance Service for Trees and Shrubs: Provide maintenance by skilled employees of landscape Installer. Maintain as required in "Plant Maintenance" Article. Begin maintenance immediately after plants are installed and continue until plantings are acceptably healthy and well established, but for not less than maintenance period below:

1. Maintenance Period: 12 months from date of Substantial Completion.

B. Maintenance Service for Ground Cover and Other Plants: Provide maintenance by skilled employees of landscape Installer. Maintain as required in "Plant Maintenance" Article. Begin maintenance immediately after plants are installed and continue until plantings are acceptably healthy and well established, but for not less than maintenance period below:

1. Maintenance Period: Twelve months from date of Substantial Completion.

END OF SECTION 32 93 00

El Paso

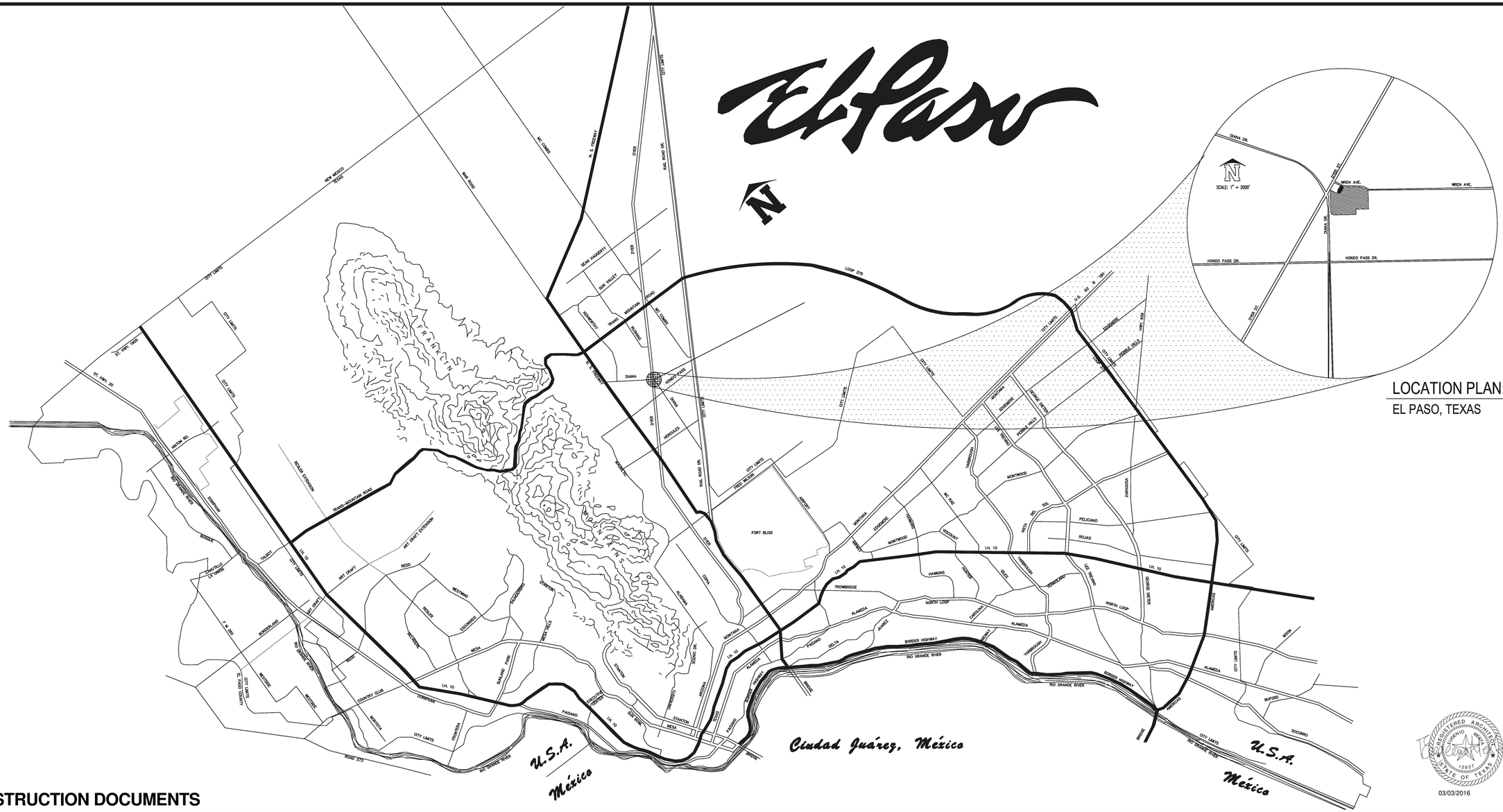

LOCATION PLAN:
EL PASO, TEXAS

100% CONSTRUCTION DOCUMENTS

100% CONSTRUCTION DOCUMENTS

03/03/2016

exigo
ARCHITECTURE INSPIRED BY PURPOSE
211 N. Florence, Ste. 204 El Paso, TX 79901
Tel. (915) 533-0323 Fax. (915) 533-0332
www.exigoarch.com

RNL
1050 17th Steet, Suite A200 Denver, CO 80265
Tel. (303) 295-1717 Fax. (303) 292-0845
www.rnldesign.com

ARCHITECTURAL AND LANDSCAPING

SER Group, Llc — Sustainable Engineering Resource Group, LLC — 2798 Wyoming Ave. | El Paso, TX. 79930 — T. 915.875.5950 | F. 915.828.4290 — www.sergroupusa.com — ENGINEERING FIRM NO. F-12631 — CIVIL

hkn engineers — 5825 Onix Drive | El Paso, TX 79912 — ph. 915.833.2100 | fax. 915.833.3855 — STRUCTURAL

FLUID SYSTEMS, INC. — CONSULTING MECHANICAL ENGINEERS — REGISTRATION NUMBER: F-1161 — 12244 REDMORE DR. • EL PASO, TEXAS 79928 — OFFICE: (915) 856-9420 FAX: (915) 856-9011 — MECHANICAL/ PLUMBING

ALPHA ENGINEERING, INC. — ENGINEERING CONSULTANTS — 1818 E. RIO GRANDE • EL PASO, TEXAS 79902 — TEL. (915) 838-9900• FAX. (915) 838-9909 — REGISTRATION # F005236 — ELECTRICAL

THE CITY OF EL PASO TEXAS

NORTHGATE TRANSFER CENTER

FUNDED BY: FTA TIGER V GRANT FUNDS AND SUN METRO ENTERPRISE FUNDS

City of El Paso
CAPITAL IMPROVEMENT Department

218 N. CAMPBELL ST. EL PASO, TX 79901
TELEPHONE : 915 212-0065

FILE NUMBER

NORTHGATE TRANSFER CENTER

ABBREVIATION LIST

&	AND
@	AT
AB	ANCHOR BOLT
ACOUS	ACOUSTIC
ALT	ALTERNATE
ALUM	ALUMINUM
AP	ACCESS PANEL
ARCH	ARCHITECTURAL
AFF	ABOVE FINISHED FLOOR
CC	CENTER TO CENTER
CJ	CONSTRUCTION JOINT / CONTROL JOINT
CLG	CEILING
CRL	CLEAR
CMU	CONCRETE MASONRY UNIT
COL	COLUMN
COMP	COMPACTED
CONC	CONCRETE
CONT	CONTINUOUS
DEMO	DEMOLITION
DET	DETAIL
DIA	DIAMETER
DIM	DIMENSION
DN	DOWN
DR	DOOR
DWGS	DRAWINGS
EA	EACH
EJ	EXPANSION JOINT
ELEC	ELECTRICAL
ELEV	ELEVATION
EP	ELECTRICAL PANEL
EW	EACH WAY
EWC	ELECTRIC WATER COOLER
EXIST	EXISTING
LTG	LIGHTING
MAS	MASONRY
MAT	MATERIAL
MAX	MAXIMUM
MCB	METAL CORNER BEAD
MECH	MECHANICAL
MFR	MANUFACTURER
MIN	MINIMUM / MINUTE
MTL	METAL
MULL	MULLION
NIC	NOT IN CONTRACT
NO	NUMBER
NOM	NOMINAL
NTS	NOT TO SCALE
OC	ON CENTER
OCEW	ON CENTER EACH WAY
OPG	OPENING
OPP	OPPOSITE
OH	OPPOSITE HAND
OHD	OVERHEAD DOOR
OVH	OVERHEAD
PTN	PARTITION
PCP	PRECAST CONCRETE PANEL
PL	PLATE
PLAM	PLASTIC LAMINATE
PLYWD	PLYWOOD
QTY	QUANTITY
QT	QUARRY TILE
RAD	RADIUS
RCP	REFLECTED CEILING PLAN
RD	ROOF DRAIN
REF	REFERENCE
REINF	REINFORCE
REQ	REQUIRED
RM	RM
SC	SOLID CORE
SCW	SOLID CORE WOOD
SCHED	SCHEDULE
SECT	SECTION
EXP	EXPANSION
EXT	EXTERIOR
EQUIP	EQUIPMENT
FT	FEET
FDN	FOUNDATION
FBO	FURNISHED BY OWNER
FBR	FIBERGLASS
FD	FLOOR DRAIN
FE	FIRE EXTINGUISER
FIN	FINISH
FF	FINISH FLOOR
FLR	FLOOR
FR	FIRE RESISTANT
FTG	FOOTING
GA	GAUGE
GALV	GALVANIZE
GC	GENERAL CONTRACTOR
GWB	GYPSUM WALL BOARD
HB	HOSE BIBB
HD	HEAD
HDWD	HARDWOOD
HM	HOLLOW METAL
HORIZ	HORIZONTAL
HT	HEIGHT
HW	HARDWARE
HMAC	HOT MIX ASPHALT CONCRETE
INSUL	INSULATION
INV	INVERT
INT	INTERIOR
JAN	JANITOR
JST	JOIST
JT	JOINT
KIT	KITCHEN
LAM	LAMINATE / LAMINATED
LAV	LAVATORY
LTWT	LIGHT WEIGHT
SHT	SHEET
SIM	SIMILAR
SPEC	SPECIFIED / SPECIFICATIONS
SS	STAINLESS STEEL
ST	STREET
STD	STANDARD
STD'S	STANDARDS
STL	STEEL
STRUCT	STRUCTURAL
SUSP	SUSPENDED
SP	SPACING
SF	SQUARE FEET
T	TREAD
TAS	TEXAS ACCESSIBILITY STANDARDS
TC	TOP OF CURB
TSCPS	THIN SHEET CONCRETE COMPOSITE WALL PANELS
TW	TOP OF WALL
TYP	TYPICAL
TB	TOP OF BEAM
TP	TOP OF PARAPET
UL	UNDERWRITERS LABORATORIES INC.
UNO	UNLESS NOTED OTHERWISE
VCT	VINYL COMPOSITE TILE
VERT	VERTICAL
VTR	VENT THRU ROOF
WSCT	WAINSCOT
W/	WITH
W/O	WITHOUT
WD	WOOD
WDO	WINDOW
WP	WATERPROOFING
WT	WEIGHT
WWF	WOVEN WIRE FABRIC

COVER SHEET	
G100	INDEX OF DRAWINGS
SURVEY	

CIVIL

C100	EXISTING SITE CONDITIONS WITH FEMA FLOOD ZONE OVERLAY
C101	DEMOLITION PLAN
C102	SUN METRO AND FTA BOUNDARIES
C103	SITE PAVEMENT PLAN
C200	GRADING PLAN
C201	ENLARGED GRADING PLAN
C202	ENLARGED GRADING PLAN
C203	ENLARGED GRADING PLAN
C204	ENLARGED GRADING PLAN
C300	DRAINAGE PLAN
C301	STORM WATER LINE 1 PROFILE
C302	STORM DRAINAGE CALCULATIONS
C400	WATER & SANITARY SEWER PLAN
C401	SANITARY SEWER PROFILES
C500	SECTIONS
C501	SECTIONS
C600	SITE DETAILS
C601	SITE DETAILS
C602	SITE DETAILS
C603	SITE DETAILS
C604	SITE DETAILS (WATER AND SANITARY SEWER)
C605	SITE DETAILS (WATER AND SANITARY SEWER)
C700	BUS DRIVE CONCRETE PAVEMENT AND JOINT LOCATION PLAN
C800	MAIN STREET PLAN & PROFILE
C900	MAIN STREET CROSS SECTIONS
C901	MAIN STREET CROSS SECTIONS
C902	MAIN STREET CROSS SECTIONS
C1000	SITE PAVEMENT MARKING & SIGNAGE PLAN
C1100	EROSION CONTROL PLAN

LANDSCAPING

L001	NOTES, LEGENDS & FINISH SCHEDULE
L100	OVERALL SITE PLAN
L101	SITE LAYOUT PLAN ZONE 1
L102	SITE LAYOUT PLAN ZONE 2
L103	SITE LAYOUT PLAN ZONE 3
L104	SITE LAYOUT PLAN ZONE 4
L201	SITE PLANTING PLAN ZONE 1
L202	SITE PLANTING PLAN ZONE 2
L203	SITE PLANTING PLAN ZONE 3
L204	SITE PLANTING PLAN ZONE 4
L301	SITE PAVEMENT ENLARGEMENT
L302	PLANTER ENLARGEMENTS
L303	PLANTER ENLARGEMENTS
L304	PLANTER ENLARGEMENTS
L305	PLANTER ENLARGEMENTS
L501	DETAILS
L502	DETAILS
L503	DETAILS
L504	DETAILS
L505	DETAILS
L506	DETAILS

IRRIGATION

IR-1	IRRIGATION PLAN
IR-2	ENLARGED IRRIGATION PLANS
IR-3	ENLARGED IRRIGATION PLANS
IR-4	IRRIGATION DETAILS

ARCHITECTURAL GARAGE

AG000	SITE PLAN
AG100	LEVEL 1- FLOOR PLAN
AG101	LEVEL 2- FLOOR PLAN
AG102	ROOF PLAN
AG200	ENLARGED TOWER PLANS
AG201	VERTICAL CIRCULATION & DETAILS
AG300	REFLECTED CEILING PLANS
AG400	DOOR TYPES, HEAD AND JAMB DETAILS
AG401	SCHEDULES AND WINDOW TYPES
AG402	SCREEN PANEL TYPES - OPTION 2
AG403	WALL TYPES
AG500	EXTERIOR ELEVATIONS
AG501	ENLARGED EXTERIOR ELEVATIONS
AG502	ENLARGED EXTERIOR ELEVATIONS
AG503	PERSPECTIVE VIEWS
AG600	BUILDING SECTIONS
AG700	WALL SECTIONS THRU GARAGE
AG701	WALLS SECTIONS @ WEST TOWER
AG702	WALLS SECTIONS @ EAST TOWER
AG703	WALL SECTIONS @ RETAIL
AG704	WALL SECTIONS @ RETAIL
AG705	WALL SECTIONS @ RETAIL
AG706	WALL SECTIONS @ RETAIL
AG707	WALL SECTIONS @ RETAIL
AG708	WALL SECTIONS
AG800	PLAN DETAILS
AG900	MISCELLANEOUS DETAILS
AG901	SIGNAGE
AG1000	OPTIONS SHEET

ARCHITECTURAL TRANSFER CENTER

G002	TYPICAL ADA
G003	TYPICAL FIXTURE MOUNTING HEIGHTS
G101	TRANSFER CENTER CODE & LIFE SAFETY INFORMATION
G102	TRANSFER CENTER CODE - BUILDING PLAN
A100	TRANSFER CENTER GROUND FLOOR PLAN
A101	TRANSFER CENTER ROOF PLAN
A200	TRANSFER CENTER ENLARGED FLOOR PLANS
A201	TRANSFER CENTER PLAZA SHADE STRUCTURES
A202	TRANSFER CENTER PLAZA SHADE STRUCTURES
A300	TRANSFER CENTER REFLECTED CEILING PLAN - LEVEL 1
A301	TRANSFER CENTER ROOF REFLECTED CEILING PLAN
A302	TRANSFER CENTER ENLARGED RCP
A400	TRANSFER CENTER FLOOR FINISH PLAN - LEVEL 1
A410	PARTITION TYPES
A411	LIMITING WALL HEIGHT TABLES FOR PARTITIONS
A412	DOOR SCHEDULE
A413	DOOR DETAILS
A414	WINDOW SCHEDULE
A415	WINDOW SCHEDULE
A416	FINISH SCHEDULE & LEGEND
A500	TRANSFER CENTER ELEVATIONS
A501	TRANSFER CENTER ELEVATIONS
A502	TRANSFER CENTER ENLARGED ELEVATIONS
A503	TRANSFER CENTER ENLARGED ELEVATIONS
A504	TRANSFER CENTER ENLARGED ELEVATIONS
A505	TRANSFER CENTER ELEVATIONS - DEDUCTIVE ALTERNATE 01
A506	TRANSFER CENTER PERSPECTIVES
A507	TRANSFER CENTER PERSPECTIVES
A600	TRANSFER CENTER SECTIONS
A601	TRANSFER CENTER SECTIONS
A700	TRANSFER CENTER WALL SECTIONS
A701	TRANSFER CENTER WALL SECTIONS
A702	TRANSFER CENTER WALL SECTIONS
A703	TRANSFER CENTER WALL SECTIONS
A800	TRANSFER CENTER PLAN DETAILS
A801	TRANSFER CENTER SECTION DETAILS
A802	TRANSFER CENTER SECTION DETAILS
A803	TRANSFER CENTER SECTION DETAILS
A804	TRANSFER CENTER SECTION DETAILS
A805	TRANSFER CENTER SECTION DETAILS
A806	TRANSFER CENTER DETAILS
A807	TRANSFER CENTER DETAILS
A808	TRANSFER CENTER DETAILS
A809	TRANSFER CENTER DETAILS
A810	TRANSFER CENTER DETAILS - DEDUCTIVE ALTERNATE 01
A900	TRANSFER CENTER INTERIOR ELEVATIONS
A901	TRANSFER CENTER INTERIOR ELEVATIONS
A902	TRANSFER CENTER INTERIOR PERSPECTIVES
A903	TRANSFER CENTER MILLWORK DETAILS

STRUCTURAL PARKING GARAGE

S000	STRUCTURAL NOTES
SG001	PIER AND COLUMN SCHEDULES
SG002	CONCRETE BEAM REINFORCEMENT DETAILS & SCHEDULE
SG003	POST-TENSIONED GIRDER DETAILS
SG004	POST-TENSIONED GIRDER SCHEDULE
SG005	TYPICAL MASONRY DETAILS
SG100	DRILLED PIER PLAN
SG101	FOUNDATION PLAN
SG101A	FOUNDATION PLAN DIMENSIONS
SG102	LEVEL 2 - FRAMING PLAN
SG103	ENLARGED PLANS
SG104	ENLARGED PLANS
SG105	ENLARGED PLANS
SG200	PRECAST CONC. WALL ELEVATIONS
SG201	LAYOUT DETAILS PRECAST PANELS
SG300	FOUNDATION DETAILS
SG301	FOUNDATION DETAILS
SG400	PARKING LEVEL 2 FRAMING DETAILS
SG401	RETAIL ROOF FRAMING DETAILS
SG402	RETAIL ROOF FRAMING DETAILS
SG403	RETAIL ROOF FRAMING DETAILS
SG500	TOWER ROOF FRAMING DETAILS
SG501	TOWER FRAMING DETAILS

STRUCTURAL TRANSFER CENTER

S001	TYPICAL FOUNDATION DETAILS
S002	TYPICAL STRUCTURAL STEEL FRAMING DETAILS
S003	TYPICAL STEEL JOIST FRAMING DETAILS
S100	FOUNDATION PLAN
S100A	FOUNDATION PLAN DIMENSIONS
S100B	CONTROL & CONSTRUCTION JOINT PLAN
S101	LOW ROOF FRAMING PLAN
S101A	LOW ROOF FRAMING PLAN DIMENSIONS
S102	HIGH ROOF FRAMING PLAN
S102A	HIGH ROOF FRAMING DIMENSIONS
S200	VERTICAL BRACED FRAME ELEVATIONS
S300	FOUNDATION DETAILS
S500	ROOF FRAMING DETAILS
S501	ROOF FRAMING DETAILS
S502	ROOF FRAMING DETAILS
S503	ROOF FRAMING DETAILS
S504	HIGH ROOF ROOF DETAILS

MECHANICAL

M100	LEGEND, SCHEDULES & NOTES
M101	MECHANICAL DETAILS
M102	CONTROL SCHEMATICS
M200	MECHANICAL PLAN TRANSIT TERMINAL
MG200	MECHANICAL PLAN PG FIRST LEVEL

PLUMBING

P100	SITE PLAN
P101	LEGEND, SCHEDULES, NOTES & DETAILS
P102	DETAILS
P103	DETAILS & SCHEDULE
P200	NEW PLUMBING PLAN TRANSIT TERMINAL
P201	ROOF PLAN TRANSIT TERMINAL
P300	ENLARGED PLUMBING, WASTE & WATER RISER DIAGRAM
P301	ENLARGED PLUMBING, WASTE & WATER RISER DIAGRAM
PG200	NEW PLUMBING PLAN PARKING GARAGE FIRST LEVEL
PG201	NEW PLUMBING PLAN PARKING GARAGE SECOND LEVEL

ELECTRICAL

E-100	TRANSFER CENTER LIGHTING PLAN
E-200	TRANSFER CENTER POWER PLAN
E-300	TRANSFER CENTER SPECIAL SYSTEMS PLAN
E-400	TRANSFER CENTER HVAC ROOF POWER PLAN
E-500	TRANSFER CENTER DETAILS
E-600	TRANSFER CENTER DETAILS
E-601	PANEL SCHEDULES
E-602	PANEL SCHEDULES
E-603	PANEL SCHEDULES & RISER DIAGRAM
EG-100	1ST FLOOR GARAGE LIGHTING PLAN
EG-101	2ND FLOOR GARAGE LIGHTING PLAN
EG-102	CIRCULATION TOWER LIGHTING PLAN
EG-103	CANOPIES LIGHTING
EG-200	1ST FLOOR GARAGE POWER PLAN
EG-201	2ND FLOOR GARAGE POWER PLAN
EG-202	CIRCULATION TOWER POWER PLAN
EG-300	1ST FLOOR GARAGE SPECIAL SYSTEMS
EG-301	2ND FLOOR GARAGE SPECIAL SYSTEMS
EG-302	CIRCULATION TOWER SPECIAL SYSTEMS PLAN
EG-400	TOWERS ROOF LIGHTING AND GARAGE DETAILS
ES-100	ELECTRICAL SITE PLAN
ES-101	ENLARGED ELECTRICAL SITE PLAN
ES-102	POWER SITE PLAN
ES-103	SPECIAL SYSTEMS SITE PLAN
ES-104	SITE PLAN DETAILS

exigo
ARCHITECTURE INSPIRED BY PURPOSE

100% CONSTRUCTION DOCUMENTS

REFERENCES -- BENCHMARKS

ARCHITECTS SEAL
03/03/2016

PROJECT NAME
NORTHGATE TRANSFER CENTER
EL PASO, TEXAS.

CITY OF EL PASO
CAPITAL IMPROVEMENT DEPARTMENT

SHEET TITLE
INDEX OF DRAWINGS

SHEET
G100

BOUNDARY AND TOPOGRAPHIC SURVEY

BEING A PORTION OF LOT 1A, BLOCK 6, NORTHGATE REPLAT "C", AN ADDITION TO THE CITY OF EL PASO, EL PASO COUNTY, TEXAS, ACCORDING TO THE PLAT THEREOF FILED IN VOLUME 62, PAGE 45, EL PASO COUNTY PLAT RECORDS

TOTAL CONTAINING: 6.3557 ACRES

SCALE 1"=40' JULY 11, 2015

NOTES:

1. BEARING BASIS: U.S. STATE PLANE COORDINATE SYSTEM, TEXAS CENTRAL 4203, NAD 1983 DATUM, AS DERIVED USING GPS METHODS VIA RTK NETWORK ESTABLISH BY WESTERN DATA, EL PASO ISLAND. ALL DISTANCES EXPRESSED IN U.S. SURVEY FEET SCALED TO SURFACE.
2. ROTATION OF 3°08'41" EAST FROM RECORD FOR NORTHGATE REPLAT "C" IS RECORDED IN BOOK 62, PAGE 45, PLAT RECORDS, EL PASO COUNTY, TEXAS, AND LOCATED BY FOUND CONTROL MONUMENTS SHOWN HEREIN.
3. VERTICAL DATUM IS NAVD 88 DATUM AS DERIVED USING GPS METHODS VIA RTK NETWORK ESTABLISH BY WESTERN DATA, EL PASO ISLAND. REFERENCE A FOUND RAILROAD SPIKE IN POWER POLE AT THE SOUTHWEST CORNER OF WREN AVENUE AND DYER STREET.
   ELEVATION = 3895.61 FT. NAVD 88
   ELEVATION = 3885.63 FT. CITY DATUM
4. ACCORDING TO THE FEDERAL EMERGENCY MANAGEMENT AGENCY FLOOD INSURANCE RATE MAP COMMUNITY PANEL NUMBER 48021400248, DATED OCTOBER 15, 1982, THIS PROPERTY LIES IN FLOOD HAZARD ZONES "AH," "B" AND "C".
5. CITY ZONING IS C-3 (COMMERCIAL DISTRICT)
6. SURVEY WAS PERFORMED WITHOUT THE BENEFIT OF A TITLE COMMITMENT FOR TITLE INSURANCE. EASEMENT MAY EXIST WHERE NON ARE SHOWN.

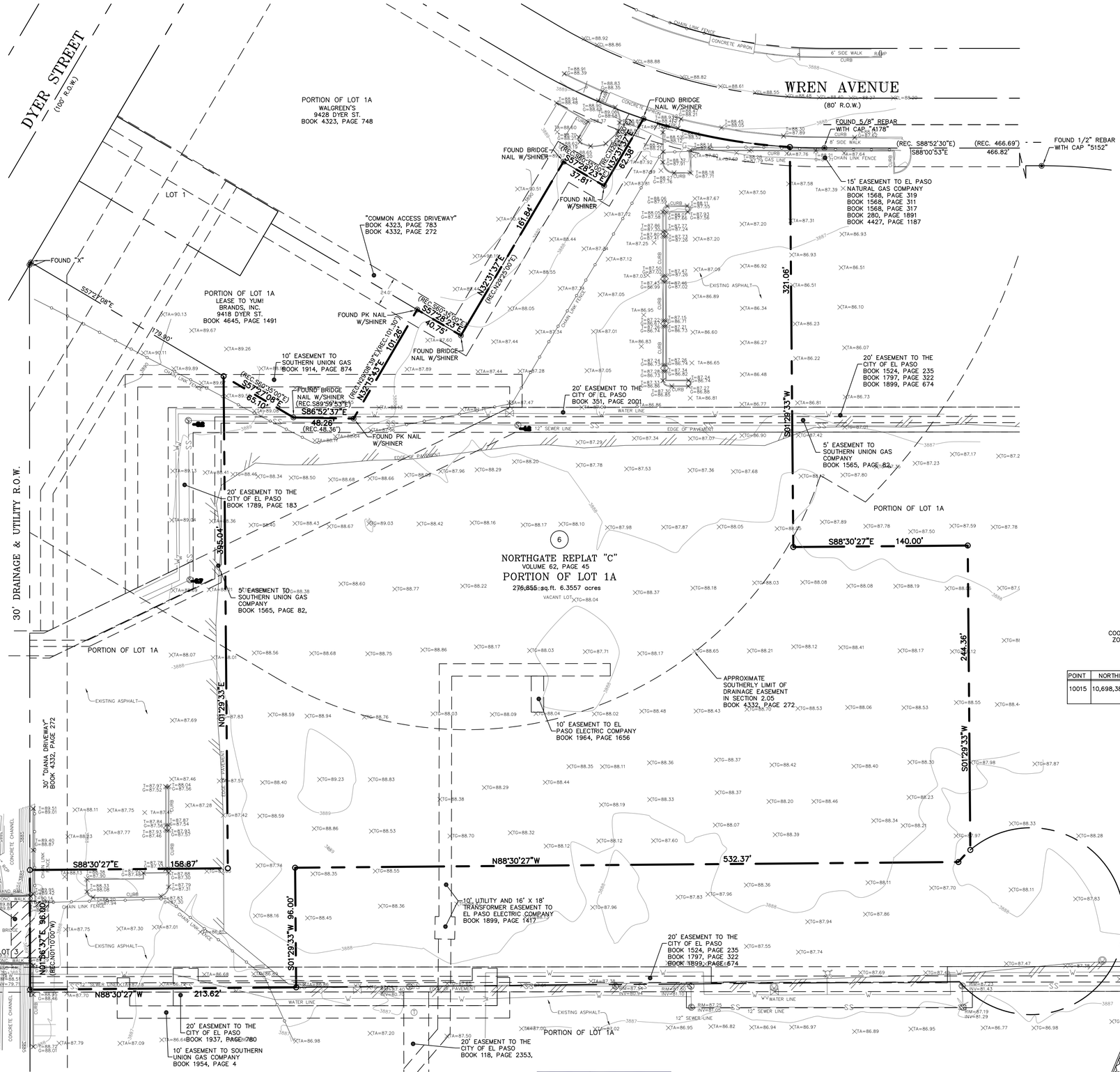

	SYMBOL LEGEND
⊙	FOUND CONTROL POINT
⊕	FOUND CITY MONUMENT
○	SET 1/2" REBAR W/CAP 6085
⊠	CALCULATED POINT (NOT SET)
Ⓢ	SANITARY SEWER MANHOLE
Ⓦ	WATER MANHOLE
⋈	WATER VALVE
⋇	FIRE HYDRANT
☼	LIGHT POLE
▫	TRAFFIC SIGN
GP	GUARD POST

OWNER INFORMATION:

GEO ID:N57999900607000

CITY OF EL PASO
300 N CAMPBELL ST
EL PASO TX 79901-1402

COORDINATE VALUES ARE TEXAS STATE PLANE, CENTRAL ZONE, NORTH AMERICAN DATUM OF 1983. ALL VALUES SHOWN ARE REPRESENTED IN U.S. SURVEY FEET. COMBINED SCALE FACTOR: 0.9998166, CONVERGENCE ANGLE: -3°08'09"

POINT	NORTHING	EASTING	ELEV.	DESCRIPTION
10015	10,698,380.25	407,612.87	3888.43	FOUND BRIDGE NAIL WITH SHINER AT THE MOST NORTHERLY RIGHT OF WAY

©COPYRIGHT 2013/PLS
ALL RIGHTS RESERVED

PRECISION LAND SURVEYORS
9999 VALLE DE CRISTOS
EL PASO, TEXAS 79927
(915)222-9227 / (575)640-0474

CERTIFICATION

I HEREBY CERTIFY THAT THIS MAP WAS MADE FROM AN ACTUAL ON THE GROUND SURVEY AND THAT THE MONUMENTATION SHOWN HEREON WERE FOUND AND/OR PLACED UNDER MY PERSONAL SUPERVISION. A 4LSD CERTIFY THAT THIS SURVEY SUBSTANTIALLY COMPLIES WITH THE CURRENT TEXAS SOCIETY OF PROFESSIONAL SURVEYORS STANDARDS AND SPECIFICATIONS FOR A CATEGORY 1A, CONDITION II SURVEY.

STATE OF TEXAS · REGISTERED · JESUS D' IBARRA · 6085 · PROFESSIONAL LAND SURVEYOR

JESUS D. IBARRA
REGISTERED PROFESSIONAL LAND SURVEYOR
TEXAS LICENSE NO. 6085

DRAWN BY: J.D.I. FIELD: J.D.I. DATE: 7/22/2015 JOB # NO. V-1557 CADD FILE: S:\V-1557\PLS-Northgate Transfer Center\dwg\V-1557SER-Northgate Transfer Center.dwg

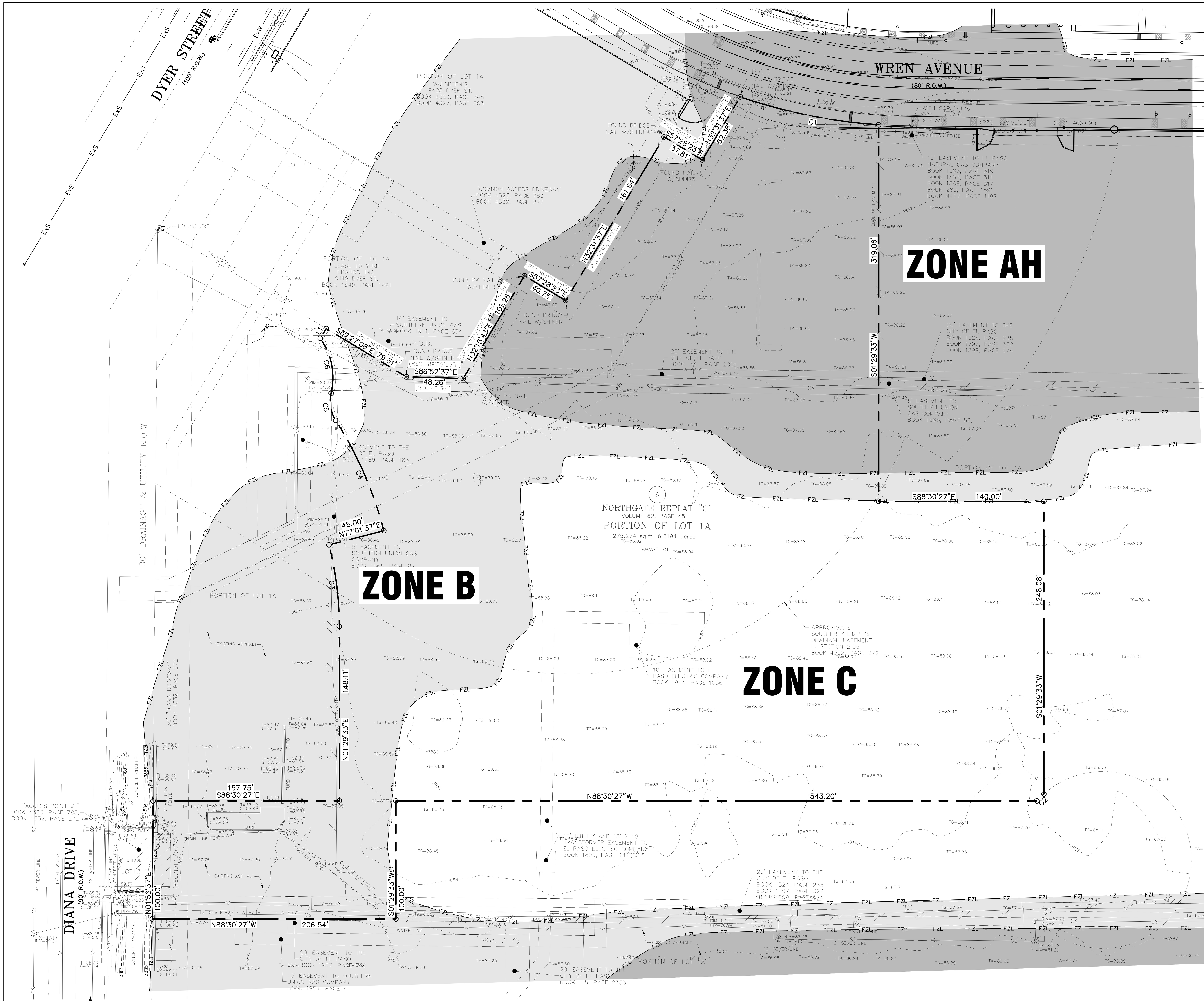

1 EXISTING SITE CONDITIONS WITH FEMA FLOOD ZONE OVERLAY

SCALE: 1"=40'-0"

LEGEND:

EXISTING CONDITIONS:

SYMBOL LEGEND
FOUND CONTROL POINT
FOUND CITY MONUMENT
SET 1/2" REBAR W/CAP 6085
CALCULATED POINT (NOT SET)
SANITARY SEWER MANHOLE
WATER MANHOLE
WATER VALVE
FIRE HYDRANT
LIGHT POLE
TRAFFIC SIGN
GUARD POST
--3668-- EXISTING CONTOURS

FEMA ZONE LEGEND

— FZL — * APPROXIMATE CURRENT FEMA FLOOD ZONE LIMITS

ZONE AH

ZONE B

ZONE C

LEGAL DESCRIPTION

BEING A PORTION OF LOT 1A, BLOCK 6, NORTHGATE REPLAT "C", AN ADDITION TO THE CITY OF EL PASO, EL PASO COUNTY, TEXAS

FLOOD ZONE DESIGNATION

ZONE "AH," "B" AND "C", PANEL NUMBER 4802140024B, DATED OCTOBER 15, 1982.

VERTICAL DATUM

VERTICAL DATUM IS NAVD 88 DATUM AS DERIVED USING GPS METHODS VIA RTK NETWORK ESTABLISH BY WESTERN DATA, EL PASO ISLAND. REFERENCE A FOUND RAILROAD SPIKE IN POWER POLE AT THE SOUTHWEST CORNER OF WREN AVENUE AND DYER STREET.
ELEVATION = 3895.61 FT. NAVD 88
ELEVATION = 3885.63 FT. CITY DATUM

TEXAS EXCAVATION SAFETY SERVICES 1-800-344-8377

CALL BEFORE YOU DIG!

* FEMA AND PLAT NOTES:

1. CITY OF EL PASO CURRENTLY COORDINATING PHYSICAL MAP REVISION THAT INCLUDES LIMITS OF THIS PROJECT WITH FEMA.
2. CITY OF EL PASO CURRENTLY COORDINATING A REPLAT FOR THE PROPOSED NORTHGATE TRANSFER CENTER THAT WILL VACATE EXISTING EASEMENTS WITHIN THIS DEVELOPMENT.

SER Group, Llc
Sustainable Engineering Resource Group, LLC
221 N. Kansas St. Suite 700 El Paso, TX 79901
T 915.875.1950 | F 915.603.4290
www.sergroupusa.com
ENGINEERING FIRM NO. F-12928

100% CONSTRUCTION DOCUMENTS

REFERENCES – BENCHMARKS

REVISIONS | DATE | BY

ENGINEER'S SEAL: SERGIO CASTILLO 3/3/16

SCALE	
HOR:	SHOWN
VER:	SHOWN
DATE	03/03/2016
DESIGN BY	S.C.
DRAWN BY	R.M.
CHKD. BY	S.C.
APPD. BY	S.C.

PROJECT NAME: NORTHGATE TRANSFER CENTER

EL PASO TEXAS

CITY OF EL PASO
CAPITAL IMPROVEMENT DEPARTMENT

SHEET TITLE: EXISTING SITE CONDITONS WITH FEMA FLOOD ZONE OVERLAY

SHEET C100

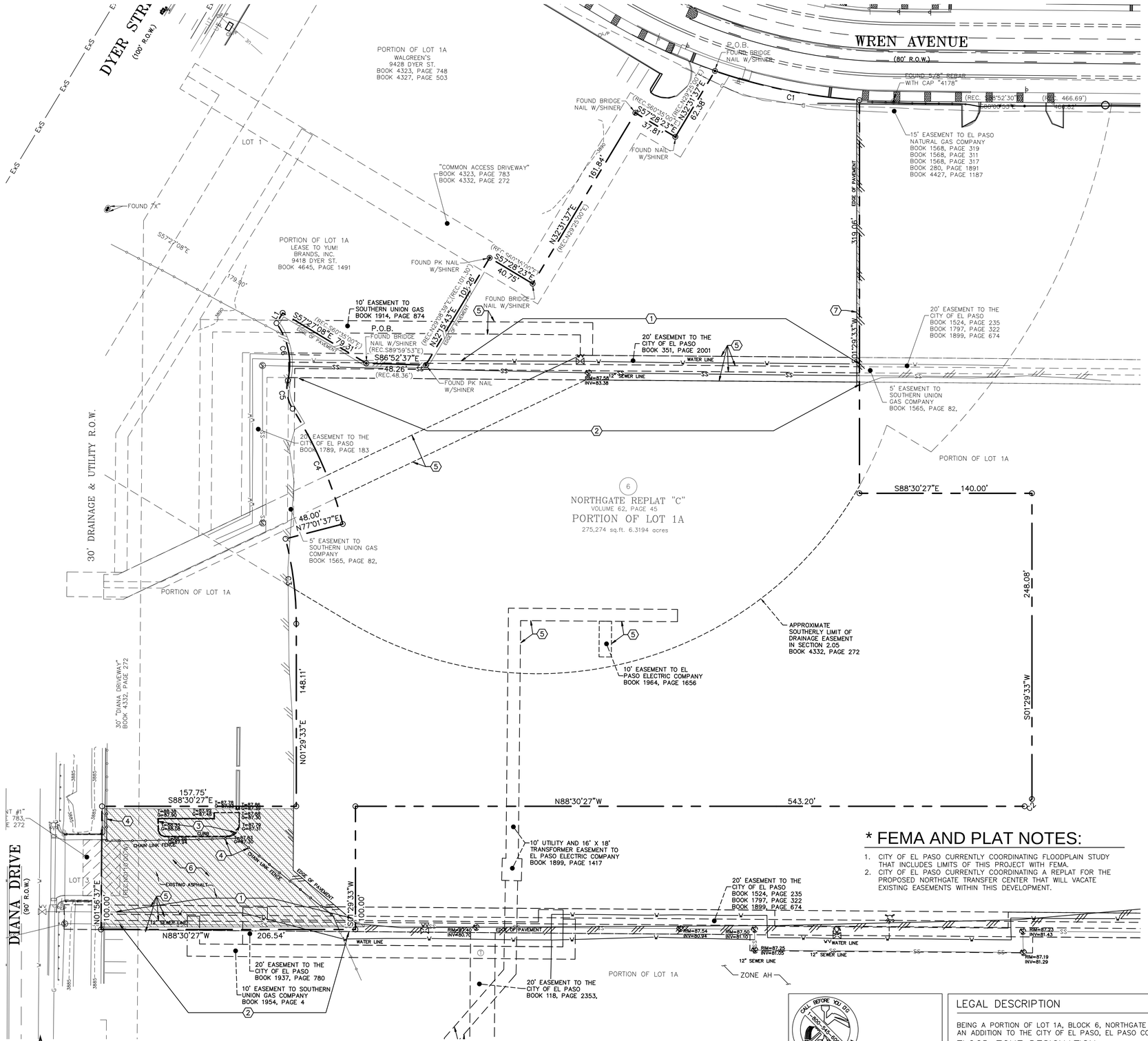

1 DEMOLITION PLAN

SCALE: 1"=40'-0"

LEGEND:

EXISTING CONDITIONS:

SYMBOL LEGEND	
◉	FOUND CONTROL POINT
⊕	FOUND CITY MONUMENT
○	SET 1/2" REBAR W/CAP 6085
⊠	CALCULATED POINT (NOT SET)
Ⓢ	SANITARY SEWER MANHOLE
Ⓦ	WATER MANHOLE
WV	WATER VALVE
FH	FIRE HYDRANT
☼	LIGHT POLE
○	TRAFFIC SIGN
GP	GUARD POST
3668	EXISTING CONTOURS

PROPOSED CONDITIONS:

PROPERTY LINE

SETBACK

EXISTING ASPHALT/ CONC./CURB & GUTTER TO BE DEMOLISHED

GENERAL NOTES:

1. ALL CONSTRUCTION SHALL BE IN ACCORDANCE WITH THE CITY OF EL PASO STANDARDS.
2. UTILITIES SHOWN ON THE PLANS WERE TAKEN FROM FIELD SURVEYS AND INFORMATION PROVIDED BY THE UTILITY COMPANIES. THE COMPLETENESS AND THE ACCURACY OF THIS DATA IS NOT GUARANTEED. CONTACT THE UTILITY COMPANIES BEFORE BEGINNING CONSTRUCTION.
THE CONTRACTOR IS RESPONSIBLE FOR VERIFYING THE LOCATION OF ALL UNDERGROUND UTILITIES AND STRUCTURES AND PROTECTING THEM FROM DAMAGE DURING CONSTRUCTION. CONTACT ENGINEER IMMEDIATELY IF ANY DISCREPANCIES ARE FOUND.
3. CONTRACTOR SHALL PROVIDE TRAFFIC CONTROL PLANS THAT COMPLY WITH REQUIREMENTS BY THE CITY OF EL PASO.
4. WORK MAY NOT BE BACK FILLED OR COVERED UNTIL IT HAS BEEN INSPECTED.
5. MATERIAL TESTING SHALL BE PERFORMED BY AN INDEPENDENT TESTING LABORATORY AND PAID FOR BY THE CONTRACTOR.
6. ALL EXCAVATION ON THE PROJECT IS UNCLASSIFIED.
7. FINISHED SLOPES OR PUBLIC RIGHT-OF-WAY AND EASEMENTS SHALL NOT BE STEEPER THAN 3:1.
8. ALL TRENCH AND EXCAVATION SHALL BE IN ACCORDANCE WITH OSHA STANDARDS.
9. THE CONTRACTOR SHALL BE RESPONSIBLE FOR EROSION/SEDIMENT CONTROL. THE CONTRACTOR SHALL CONSULT WITH THE ENGINEER IF THERE ARE ANY SIGNS THAT SEDIMENT HAS LEFT THE PROPOSED WORK AREA.
10. THE CONTRACTOR SHALL FURNISH TO THE CITY OF EL PASO PROOF OF SATISFACTORY COVERAGE OF INSURANCE IN ACCORDANCE WITH STANDARD REQUIREMENTS PRIOR TO BEGINNING OF CONSTRUCTION.
11. THE CONTRACTOR AGREES TO FULLY INDEMNIFY AND SAVE HOLD AND HARMLESS THE CITY AND OWNER OF THE PROPERTY AND LOTS ABUTTING THE PROPERTY IN THIS CONTRACT FROM ALL COSTS OR DAMAGES ARISING OUT OF ANY AND ALL COSTS OR DAMAGES ARISING OUT OF ANY WRONGS, INJURY, DEMANDS OR SUITS FOR DAMAGES EITHER REAL OR ASSERTED, CLAIMED AGAINST IT THAT IT MAY BE OCCASIONED BY ANY ACT, OMISSION, NEGLECT OR MISCONDUCT OF SAID CONTRACTOR, HIS AGENTS, SERVANTS AND EMPLOYEES. A HOLD HARMLESS AGREEMENT SHOULD BE PROVIDED TO THE CITY FOR ANY GRADING OR DRAINAGE IMPROVEMENTS ON PRIVATE OR OFFSITE AREAS.
12. TOPOGRAPHICAL INFORMATION BASED ON SURVEY BY PLS SURVEYORS.

DEMOLITION KEY:

1. LIMITS OF EXISTING WATER PIPE TO BE REMOVED, ONLY WHEN WATER LINE TO THE EAST OF THE PROPERTY LINE OF THIS DEVELOPMENT HAS BEEN CONNECTED TO THE MAIN WATER SYSTEM. PRIOR TO WATER LINE REMOVAL, CONTRACTOR TO COORDINATE WITH EPWU-PSB AND CITY OF EL PASO TO ENSURE THAT EXISTING WATER LINE EAST OF THE PROPERTY LIMITS OF THIS DEVELOPMENT WILL CONTINUE WITH UNINTERRUPTED WATER SERVICE (E.G.: NEW CONNECTION TO WATER LINE ALONG WREN AVE).
2. LIMITS OF EXISTING SANITARY SEWER PIPE TO BE REMOVED, PRIOR TO SANITARY SEWER LINE REMOVAL, CONTRACTOR TO COORDINATE WITH EPWU-PSB AND CITY OF EL PASO TO ENSURE THAT THE EXISTING SANITARY SEWER LINE EAST OF THE PROPERTY LIMITS OF THIS DEVELOPMENT WILL CONTINUE WITH UNINTERRUPTED SANITARY SEWER SERVICE.
3. EXISTING CONCRETE CURB TO BE REMOVED
4. CHAINLINK FENCE TO BE REMOVED
5. EXISTING UTILITY EASEMENT TO BE VACATED THROUGH CITY OF EL PASO REPLAT
6. EXISTING ASPHALT PAVEMENT TO BE REMOVED
7. REMOVE REMAINING ASPHALT PAVEMENT UP TO PROPERTY LINE APPROX. 2'-3" - THIS AREA ONLY

GENERAL DEMOLITION NOTES:

A. CONTRACTOR SHALL BE RESPONSIBLE FOR REMOVAL OF THE EXISTING STRUCTURES, RELATED UTILITIES, PAVING, UNDERGROUND STORAGE TANKS, EXISTING BASEMENT STRUCTURES AND ANY OTHER EXISTING IMPROVEMENTS AS NOTED.

B. CONTRACTOR IS TO REMOVE AND DISPOSE OF ALL DEBRIS, RUBBISH AND OTHER MATERIALS RESULTING FROM PREVIOUS AND CURRENT DEMOLITION OPERATIONS. DISPOSAL WILL BE IN ACCORDANCE WITH ALL LOCAL, STATE AND/OR FEDERAL REGULATIONS GOVERNING SUCH OPERATION

C. THE GENERAL CONTRACTOR SHALL TAKE ALL PRECAUTIONS NECESSARY TO AVOID PROPERTY DAMAGE TO ADJACENT PROPERTIES DURING THE CONSTRUCTION PHASES OF THIS PROJECT.

D. IF DEMOLITION OR CONSTRUCTION ON SITE WILL INTERFERE WITH THE TRAFFIC FLOW, THE CONTRACTOR SHALL COORDINATE WITH THE PROPERTY OWNER, TO MINIMIZE THE IMPACT ON TRAFFIC FLOW. TEMPORARY RE-ROUTING OF TRAFFIC IS TO BE ACCOMPLISHED BY USING DOT-APPROVED TRAFFIC BARRICADES, BARRELS, AND/OR CONES. TEMPORARY SIGNAGE AND FLAGMEN MAY ALSO BE NECESSARY.

* FEMA AND PLAT NOTES:

1. CITY OF EL PASO CURRENTLY COORDINATING FLOODPLAIN STUDY THAT INCLUDES LIMITS OF THIS PROJECT WITH FEMA.
2. CITY OF EL PASO CURRENTLY COORDINATING A REPLAT FOR THE PROPOSED NORTHGATE TRANSFER CENTER THAT WILL VACATE EXISTING EASEMENTS WITHIN THIS DEVELOPMENT.

CALL BEFORE YOU DIG! 1-800-344-8377 TEXAS ONE CALL SYSTEM

TEXAS EXCAVATION SAFETY SERVICES 1-800-344-8377

CALL BEFORE YOU DIG!

LEGAL DESCRIPTION

BEING A PORTION OF LOT 1A, BLOCK 6, NORTHGATE REPLAT "C", AN ADDITION TO THE CITY OF EL PASO, EL PASO COUNTY, TEXAS

FLOOD ZONE DESIGNATION

ZONE "AH," "B" AND "C", PANEL NUMBER 4802140024B, DATED OCTOBER 15, 1982.

VERTICAL DATUM

VERTICAL DATUM IS NAVD 88 DATUM AS DERIVED USING GPS METHODS VIA RTK NETWORK ESTABLISH BY WESTERN DATA, EL PASO ISLAND. REFERENCE A FOUND RAILROAD SPIKE IN POWER POLE AT THE SOUTHWEST CORNER OF WREN AVENUE AND DYER STREET.
ELEVATION = 3895.61 FT. NAVD 88
ELEVATION = 3885.63 FT. CITY DATUM

100% CONSTRUCTION DOCUMENTS

Sustainable Engineering Resource Group, LLC
221 N. Kansas St. Suite 700 El Paso, TX 79901
T 915.875.1990 I F 915.603.4290
www.sergroupusa.com
ENGINEERING FIRM NO. F-12625

SER Group, Llc

REFERENCES – BENCHMARKS

BY	DATE	REVISIONS

ENGINEER'S SEAL

STATE OF TEXAS · SERGIO CASTILLO · 96421 · LICENSED PROFESSIONAL ENGINEER · 3/3/16

SCALE
HOR: SHOWN
VER: SHOWN

DATE 03/03/2016
DESIGN BY S.C.
DRAWN BY M.L.
CHKD. BY S.C.
APPD. BY S.C.

PROJECT NAME

NORTHGATE TRANSFER CENTER

EL PASO TEXAS

CITY OF EL PASO

CAPITAL IMPROVEMENT DEPARTMENT

THE CITY OF EL PASO TEXAS

SHEET TITLE

DEMOLITION PLAN

SHEET

C101

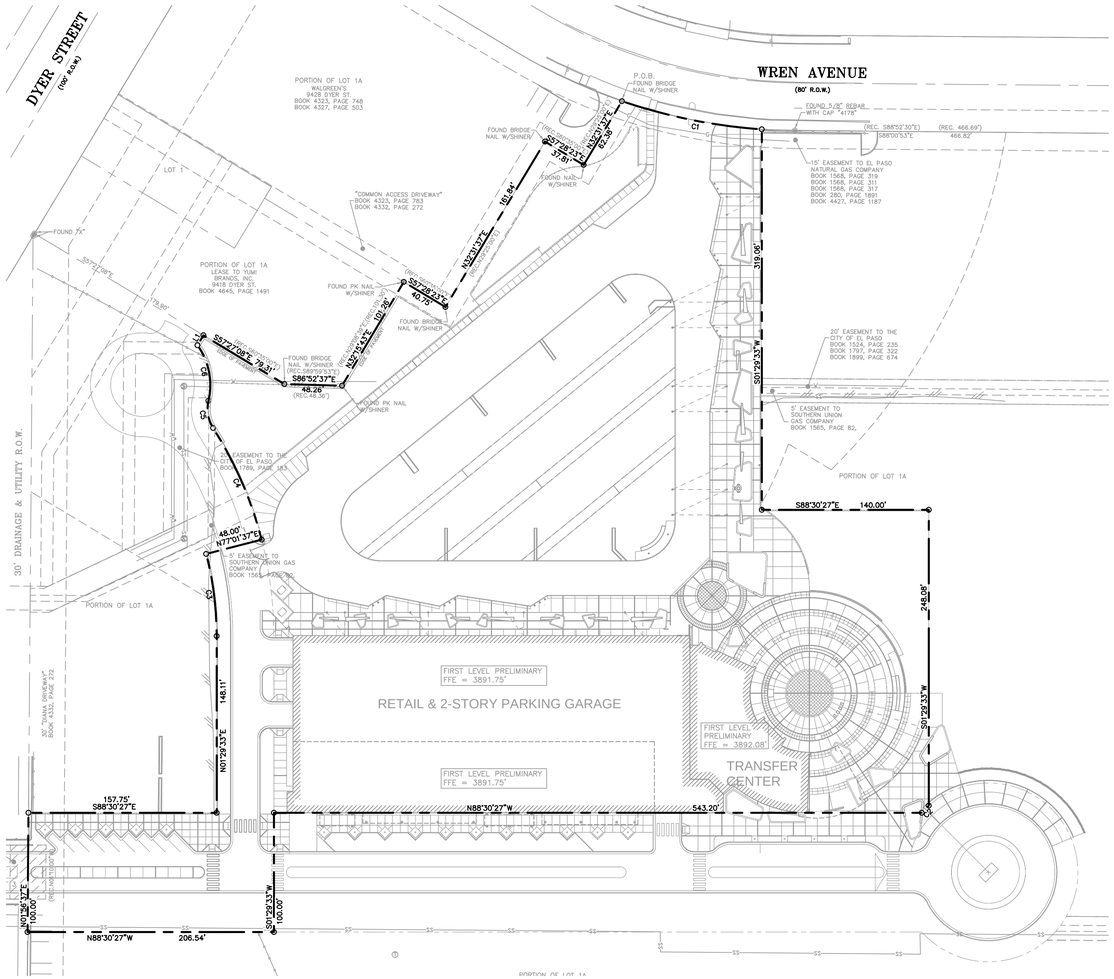

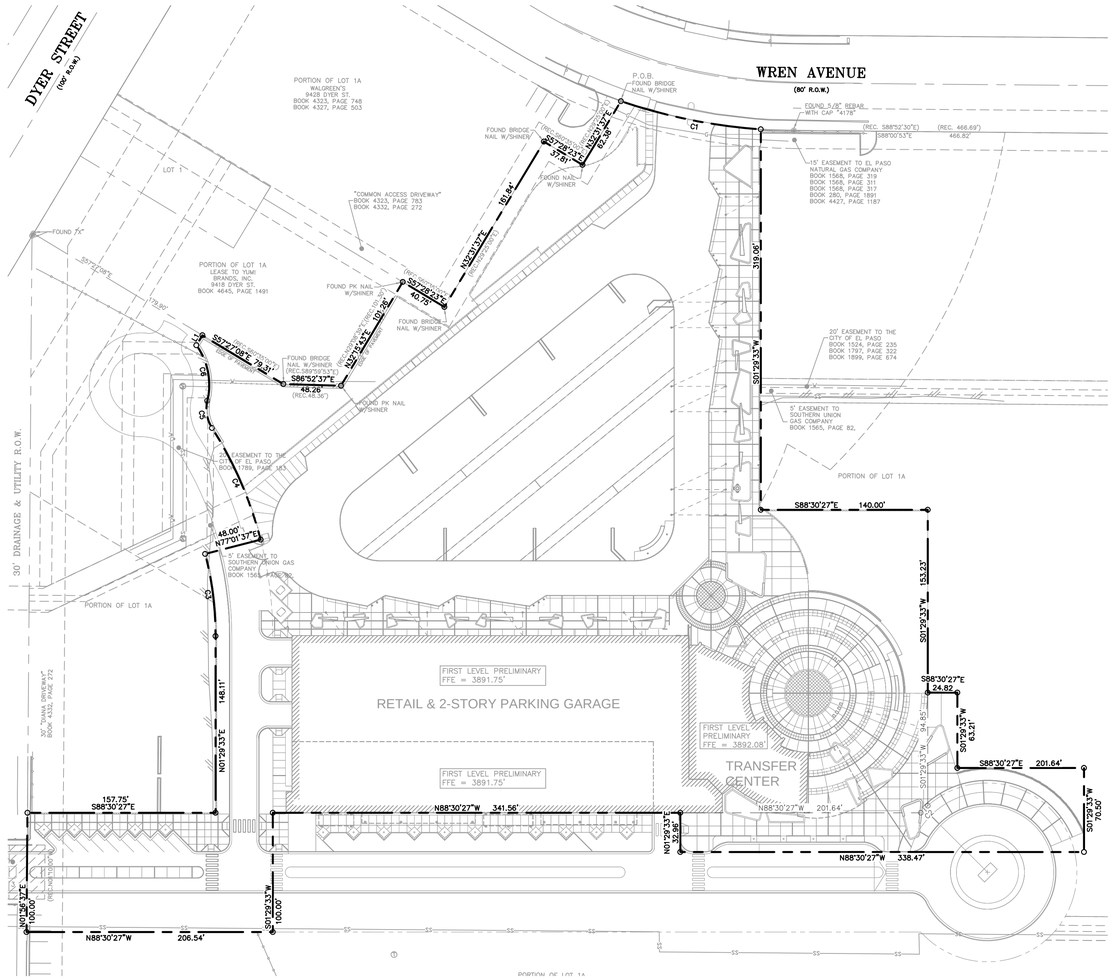

SUN METRO BOUNDARY LEGEND:

SUN METRO BOUNDARY

SUN METRO BOUNDARY AREA:

TOTAL AREA WITHIN SUN METRO BOUNDARY = 6.32 ACRES

1 SUN METRO BOUNDARY

SCALE: 1"=60'-0"

FTA BOUNDARY LEGEND:

FTA BOUNDARY

SUN METRO BOUNDARY

FTA BOUNDARY AREA:

TOTAL AREA WITHIN SUN METRO BOUNDARY = 6.73 ACRES

2 FTA BOUNDARY

SCALE: 1"=60'-0"

Sustainable Engineering Resource Group, LLC
221 N. Kansas St., Suite 700 El Paso, TX 79901
T 915.875.1990 I F 915.603.4290
www.sergroupusa.com
ENGINEERING FIRM NO. F-12625

SER Group, Llc

100% CONSTRUCTION DOCUMENTS

REFERENCES -- BENCHMARKS

BY	DATE	REVISIONS

ENGINEER'S SEAL

STATE OF TEXAS — SERGIO CASTILLO — 125621 — LICENSED PROFESSIONAL ENGINEER — 3/3/16

SCALE
HOR: SHOWN
VER: SHOWN

DATE 03/03/2016
DESIGN BY S.C.
DRAWN BY A.L.
CHKD. BY S.C.
APPD. BY S.C.

PROJECT NAME

NORTHGATE TRANSFER CENTER

EL PASO TEXAS

CITY OF EL PASO

CAPITAL IMPROVEMENT DEPARTMENT

SHEET TITLE

SUN METRO & FTA BOUNDARIES

SHEET

C102

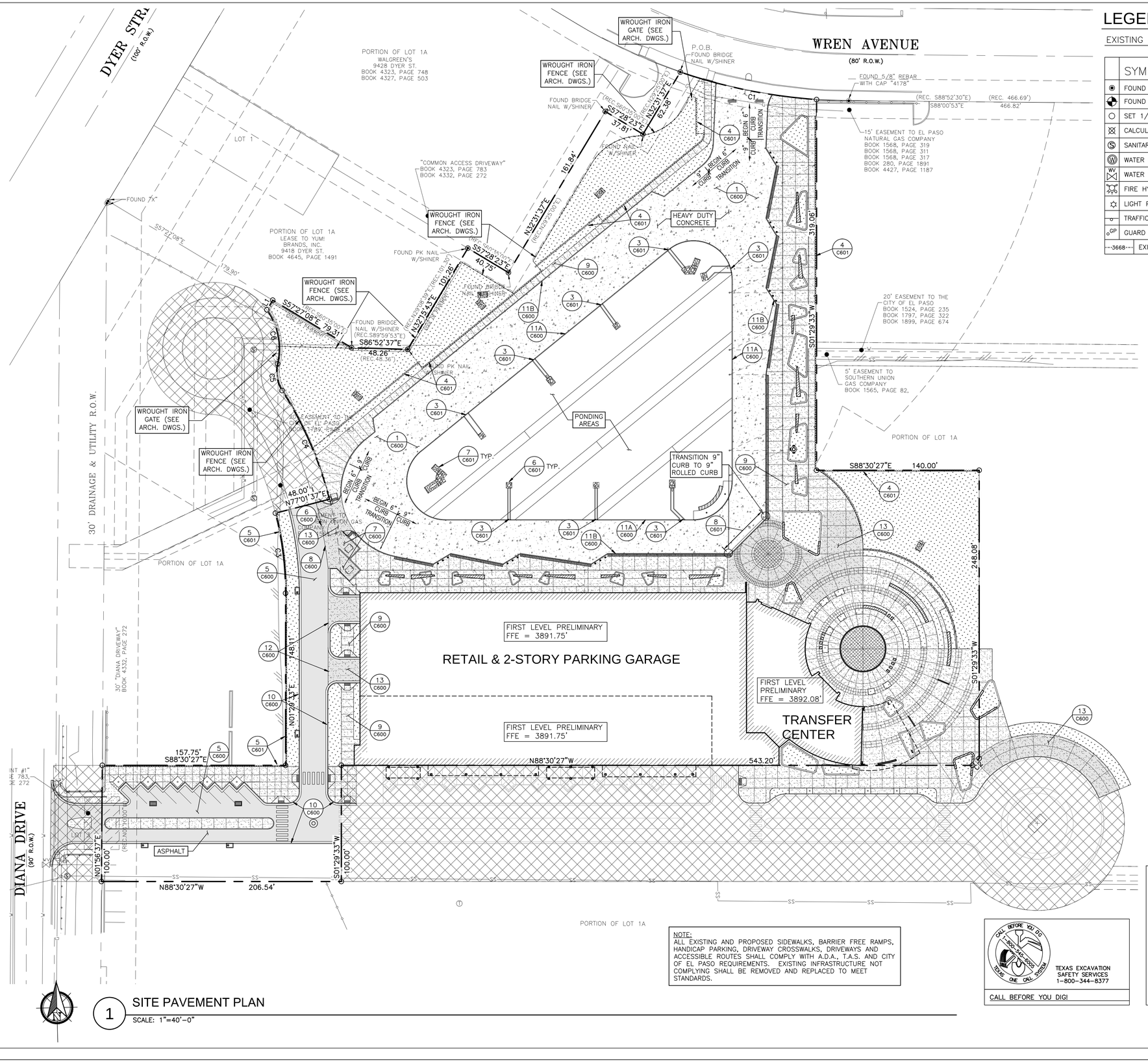

LEGEND:

EXISTING CONDITIONS:

	SYMBOL LEGEND
⊙	FOUND CONTROL POINT
◔	FOUND CITY MONUMENT
○	SET 1/2" REBAR W/CAP 6085
⊠	CALCULATED POINT (NOT SET)
Ⓢ	SANITARY SEWER MANHOLE
Ⓦ	WATER MANHOLE
WV	WATER VALVE
FH	FIRE HYDRANT
☼	LIGHT POLE
⊸	TRAFFIC SIGN
GP	GUARD POST
-3668-	EXISTING CONTOURS

PROPOSED CONDITIONS:

- PROPERTY LINE
- SETBACK
- 4" LIGHT DUTY CONCRETE (SIDEWALK)
- 10" HEAVY DUTY CONCRETE (BUS DRIVEWAY)
- ASPHALT PAVEMENT
- LANDSCAPE (SEE LANDSCAPE PLANS)
- PUBLIC STREET EXTENSION NOT PART OF THIS CONTRACT
- 7" HEAVY DUTY CONCRETE (DUMPSTER, FOOD TRUCKS)
- ADA TRUNCATED DOME SURFACE (SEE ARCHITECTURAL DWGS.)
- PROPOSED ROCKWALL
- PROPOSED WROUGHT IRON FENCE (SEE ARCH. DWGS.)
- PROPOSED CONC. WALL (SEE ARCH. DWGS.)
- PROPOSED CONC. BENCH (SEE ARCH. DWGS.)

COORDINATE THE JOINT SPACING, CONCRETE TEXTURE/FINISH, AND CONCRETE COLOR WITHIN THE PLAZA AREA AND SIDEWALKS WITH LANDSCAPE ARCHITECTURAL DRAWINGS.

GENERAL NOTES:

1. ALL CONSTRUCTION SHALL BE IN ACCORDANCE WITH THE CITY OF EL PASO STANDARDS.
2. UTILITIES SHOWN ON THE PLANS WERE TAKEN FROM FIELD SURVEYS AND INFORMATION PROVIDED BY THE UTILITY COMPANIES. THE COMPLETENESS AND THE ACCURACY OF THIS DATA IS NOT GUARANTEED. CONTACT THE UTILITY COMPANIES BEFORE BEGINNING CONSTRUCTION. THE CONTRACTOR IS RESPONSIBLE FOR VERIFYING THE LOCATION OF ALL UNDERGROUND UTILITIES AND STRUCTURES AND PROTECTING THEM FROM DAMAGE DURING CONSTRUCTION. CONTACT ENGINEER IMMEDIATELY IF ANY DISCREPANCIES ARE FOUND.
3. CONTRACTOR SHALL PROVIDE TRAFFIC CONTROL PLANS THAT COMPLY WITH REQUIREMENTS BY THE CITY OF EL PASO.
4. WORK MAY NOT BE BACK FILLED OR COVERED UNTIL IT HAS BEEN INSPECTED.
5. MATERIAL TESTING SHALL BE PERFORMED BY AN INDEPENDENT TESTING LABORATORY AND PAID FOR BY THE CONTRACTOR.
6. ALL EXCAVATION ON THE PROJECT IS UNCLASSIFIED.
7. FINISHED SLOPES OR PUBLIC RIGHT-OF-WAY AND EASEMENTS SHALL NOT BE STEEPER THAN 3:1.
8. ALL TRENCH AND EXCAVATION SHALL BE IN ACCORDANCE WITH OSHA STANDARDS.
9. THE CONTRACTOR SHALL BE RESPONSIBLE FOR EROSION/SEDIMENT CONTROL. THE CONTRACTOR SHALL CONSULT WITH THE ENGINEER IF THERE ARE ANY SIGNS THAT SEDIMENT HAS LEFT THE PROPOSED WORK AREA.
10. THE CONTRACTOR SHALL FURNISH TO THE CITY OF EL PASO PROOF OF SATISFACTORY COVERAGE OF INSURANCE IN ACCORDANCE WITH STANDARD REQUIREMENTS PRIOR TO BEGINNING OF CONSTRUCTION.
11. THE CONTRACTOR AGREES TO FULLY INDEMNIFY AND SAVE HOLD AND HARMLESS THE CITY AND OWNER OF THE PROPERTY AND LOTS ABUTTING THE PROPERTY IN THIS CONTRACT FROM ALL COSTS OR DAMAGES ARISING OUT OF ANY AND ALL COSTS OR DAMAGES ARISING OUT OF ANY WRONGS, INJURY, DEMANDS OR SUITS FOR DAMAGES EITHER REAL OR ASSERTED, CLAIMED AGAINST IT THAT IT MAY BE OCCASIONED BY ANY ACT, OMISSION, NEGLECT OR MISCONDUCT OF SAID CONTRACTOR, HIS AGENTS, SERVANTS AND EMPLOYEES. A HOLD HARMLESS AGREEMENT SHOULD BE PROVIDED TO THE CITY FOR ANY GRADING OR DRAINAGE IMPROVEMENTS ON PRIVATE OR OFFSITE AREAS.
12. TOPOGRAPHICAL INFORMATION BASED ON SURVEY BY PLS SURVEYORS.

FEMA AND PLAT NOTES:

1. EXISTING FEMA BOUNDARIES AND EXISTING EASEMENTS WITHIN THIS DEVELOPMENT ARE NOT SHOWN ON THIS SHEET SINCE THE CITY OF EL PASO IS COORDINATING A PHYSICAL MAP REVISION WITH FEMA. IN ADDITION, THE CITY OF EL PASO IS COORDINATING A REPLAT TO VACATE EASEMENTS WITHIN THIS DEVELOPMENT.

NOTE:
ALL EXISTING AND PROPOSED SIDEWALKS, BARRIER FREE RAMPS, HANDICAP PARKING, DRIVEWAY CROSSWALKS, DRIVEWAYS AND ACCESSIBLE ROUTES SHALL COMPLY WITH A.D.A., T.A.S. AND CITY OF EL PASO REQUIREMENTS. EXISTING INFRASTRUCTURE NOT COMPLYING SHALL BE REMOVED AND REPLACED TO MEET STANDARDS.

TEXAS EXCAVATION SAFETY SERVICES
1-800-344-8377
CALL BEFORE YOU DIG!

LEGAL DESCRIPTION

BEING A PORTION OF LOT 1A, BLOCK 6, NORTHGATE REPLAT "C", AN ADDITION TO THE CITY OF EL PASO, EL PASO COUNTY, TEXAS

FLOOD ZONE DESIGNATION

ZONE "AH," "B" AND "C", PANEL NUMBER 48021400024B, DATED OCTOBER 15, 1982.

VERTICAL DATUM

VERTICAL DATUM IS NAVD 88 DATUM AS DERIVED USING GPS METHODS VIA RTK NETWORK ESTABLISH BY WESTERN DATA, EL PASO ISLAND. REFERENCE A FOUND RAILROAD SPIKE IN POWER POLE AT THE SOUTHWEST CORNER OF WREN AVENUE AND DYER STREET.
ELEVATION = 3895.61 FT. NAVD 88
ELEVATION = 3885.63 FT. CITY DATUM

1 SITE PAVEMENT PLAN
SCALE: 1"=40'-0"

100% CONSTRUCTION DOCUMENTS

Sustainable Engineering Resource Group, LLC
221 N. Kansas St., Suite 700 El Paso, TX 79901
T 915.875.1990 | F 915.603.4290
www.sergroupusa.com
ENGINEERING FIRM NO. F-12623

SER Group, Llc

REFERENCES -- BENCHMARKS

BY	REVISIONS	DATE

ENGINEER'S SEAL
STATE OF TEXAS
SERGIO CASTILLO
103421
LICENSED PROFESSIONAL ENGINEER
3/3/16

SCALE
HOR: SHOWN
VER: SHOWN

DATE	03/03/2016
DESIGN BY	S.C.
DRAWN BY	S.C.
CHKD. BY	S.C.
APPD. BY	

PROJECT NAME
NORTHGATE TRANSFER CENTER

CITY OF EL PASO
CAPITAL IMPROVEMENT DEPARTMENT

EL PASO TEXAS

SHEET TITLE
SITE PAVEMENT PLAN

SHEET
C103

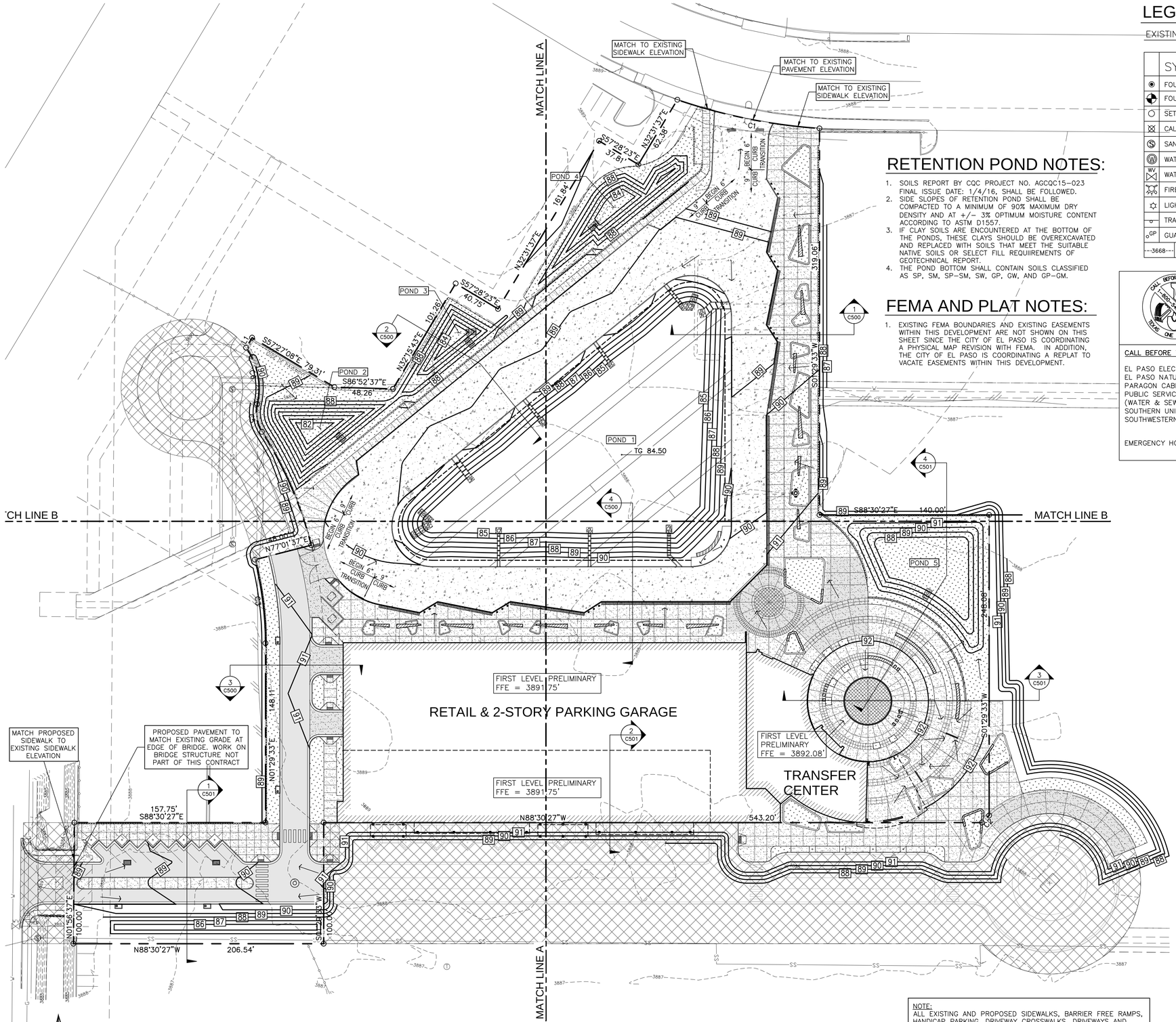

1 GRADING PLAN

SCALE: 1"=40'-0"

NOTE:
ALL EXISTING AND PROPOSED SIDEWALKS, BARRIER FREE RAMPS, HANDICAP PARKING, DRIVEWAY CROSSWALKS, DRIVEWAYS AND ACCESSIBLE ROUTES SHALL COMPLY WITH A.D.A., T.A.S. AND CITY OF EL PASO REQUIREMENTS. EXISTING INFRASTRUCTURE NOT COMPLYING SHALL BE REMOVED AND REPLACED TO MEET STANDARDS.

RETENTION POND NOTES:

1. SOILS REPORT BY CQC PROJECT NO. AGCQC15-023 FINAL ISSUE DATE: 1/4/16, SHALL BE FOLLOWED.
2. SIDE SLOPES OF RETENTION POND SHALL BE COMPACTED TO A MINIMUM OF 90% MAXIMUM DRY DENSITY AND AT +/- 3% OPTIMUM MOISTURE CONTENT ACCORDING TO ASTM D1557.
3. IF CLAY SOILS ARE ENCOUNTERED AT THE BOTTOM OF THE PONDS, THESE CLAYS SHOULD BE OVEREXCAVATED AND REPLACED WITH SOILS THAT MEET THE SUITABLE NATIVE SOILS OR SELECT FILL REQUIIREMENTS OF GEOTECHNICAL REPORT.
4. THE POND BOTTOM SHALL CONTAIN SOILS CLASSIFIED AS SP, SM, SP-SM, SW, GP, GW, AND GP-GM.

FEMA AND PLAT NOTES:

1. EXISTING FEMA BOUNDARIES AND EXISTING EASEMENTS WITHIN THIS DEVELOPMENT ARE NOT SHOWN ON THIS SHEET SINCE THE CITY OF EL PASO IS COORDINATING A PHYSICAL MAP REVISION WITH FEMA. IN ADDITION, THE CITY OF EL PASO IS COORDINATING A REPLAT TO VACATE EASEMENTS WITHIN THIS DEVELOPMENT.

LEGEND:

EXISTING CONDITIONS:

	SYMBOL LEGEND
	FOUND CONTROL POINT
	FOUND CITY MONUMENT
	SET 1/2" REBAR W/CAP 6085
	CALCULATED POINT (NOT SET)
S	SANITARY SEWER MANHOLE
W	WATER MANHOLE
WV	WATER VALVE
	FIRE HYDRANT
	LIGHT POLE
	TRAFFIC SIGN
GP	GUARD POST
3668	EXISTING CONTOURS

PROPOSED CONDITIONS:

- FFE — FINISH FLOOR ELEVATION
- 540.00 — NEW CONTOURS IN FEET
- WATER RUNOFF FLOW ARROW
- 1.0% — SLOPE PERCENTAGE AND DIRECTION
- PROPERTY LINE
- SETBACK
- 4" LIGHT DUTY CONCRETE (SIDEWALK)
- 10" HEAVY DUTY CONCRETE (DRIVEWAY, DUMPSTER)
- ASPHALT PAVEMENT
- LANDSCAPE (SEE LANDSCAPE PLANS)
- PUBLIC STREET EXTENSION NOT PART OF THIS CONTRACT
- 7" HEAVY DUTY CONCRETE (DUMPSTER, FOOD TRUCKS)
- ADA TRUNCATED DOME SURFACE (SEE ARCHITECTURAL DWGS.)
- PROPOSED ROCKWALL
- PROPOSED WROUGHT IRON FENCE (SEE ARCH. DWGS.)
- PROPOSED CONC. WALL (SEE ARCH. DWGS.)
- PROPOSED CONC. BENCH (SEE ARCH. DWGS.)
- GRATE INLET
- CURB INLET

CALL BEFORE YOU DIG!
TEXAS EXCAVATION SAFETY SERVICES
1-800-344-8377

CALL BEFORE YOU DIG!

EL PASO ELECTRIC COMPANY	(915) 541-5720
EL PASO NATURAL GAS CO.	(800) 334-8047
PARAGON CABLE	(915) 775-7414
PUBLIC SERVICE BOARD (WATER & SEWER)	(915) 594-5527
SOUTHERN UNION GAS CO.	(915) 544-6300
SOUTHWESTERN BELL TEL.	(800) 286-8343
EMERGENCY HOT LINE	(915) 562-8411/ (915) 562-2003

GENERAL NOTES:

1. ALL CONSTRUCTION SHALL BE IN ACCORDANCE WITH THE CITY OF EL PASO STANDARDS.
2. UTILITIES SHOWN ON THE PLANS WERE TAKEN FROM FIELD SURVEYS AND INFORMATION PROVIDED BY THE UTILITY COMPANIES. THE COMPLETENESS AND THE ACCURACY OF THIS DATA IS NOT GUARANTEED. CONTACT THE UTILITY COMPANIES BEFORE BEGINNING CONSTRUCTION. THE CONTRACTOR IS RESPONSIBLE FOR VERIFYING THE LOCATION OF ALL UNDERGROUND UTILITIES AND STRUCTURES AND PROTECTING THEM FROM DAMAGE DURING CONSTRUCTION. CONTACT ENGINEER IMMEDIATELY IF ANY DISCREPANCIES ARE FOUND.
3. CONTRACTOR SHALL PROVIDE TRAFFIC CONTROL PLANS THAT COMPLY WITH REQUIREMENTS BY THE CITY OF EL PASO.
4. WORK MAY NOT BE BACK FILLED OR COVERED UNTIL IT HAS BEEN INSPECTED.
5. MATERIAL TESTING SHALL BE PERFORMED BY AN INDEPENDENT TESTING LABORATORY AND PAID FOR BY THE CONTRACTOR.
6. ALL EXCAVATION ON THE PROJECT IS UNCLASSIFIED.
7. FINISHED SLOPES OR PUBLIC RIGHT-OF-WAY AND EASEMENTS SHALL NOT BE STEEPER THAN 3:1.
8. ALL TRENCH AND EXCAVATION SHALL BE IN ACCORDANCE WITH OSHA STANDARDS.
9. THE CONTRACTOR SHALL BE RESPONSIBLE FOR EROSION/SEDIMENT CONTROL. THE CONTRACTOR SHALL CONSULT WITH THE ENGINEER IF THERE ARE ANY SIGNS THAT SEDIMENT HAS LEFT THE PROPOSED WORK AREA.
10. THE CONTRACTOR SHALL FURNISH TO THE CITY OF EL PASO PROOF OF SATISFACTORY COVERAGE OF INSURANCE IN ACCORDANCE WITH STANDARD REQUIREMENTS PRIOR TO BEGINNING OF CONSTRUCTION.
11. THE CONTRACTOR AGREES TO FULLY INDEMNIFY AND SAVE HOLD AND HARMLESS THE CITY AND OWNER OF THE PROPERTY AND LOTS ABUTTING THE PROPERTY IN THIS CONTRACT FROM ALL COSTS OR DAMAGES ARISING OUT OF ANY AND ALL COSTS OR DAMAGES ARISING OUT OF ANY WRONGS, INJURY, DEMANDS OR SUITS FOR DAMAGES EITHER REAL OR ASSERTED, CLAIMED AGAINST IT THAT IT MAY BE OCCASIONED BY ANY ACT, OMISSION, NEGLECT OR MISCONDUCT OF SAID CONTRACTOR, HIS AGENTS, SERVANTS AND EMPLOYEES. A HOLD HARMLESS AGREEMENT SHOULD BE PROVIDED TO THE CITY FOR ANY GRADING OR DRAINAGE IMPROVEMENTS ON PRIVATE OR OFFSITE AREAS.
12. TOPOGRAPHICAL INFORMATION BASED ON SURVEY BY PRECISION LAND SURVEYORS.

18.44.220 – Permit closeout procedure.

After the permittee completes the grading under the permit, the permit shall be closed. As part of the closeout procedure, the applicant must submit the following to the city:

A. A statement from the engineer of record that states, "the grading operation has been substantially completed and generally conforms to the approved set of plans". The permittee shall call the permit official to establish the beginning of the warranty period and to notify the permit official that the GSP has been implemented.
B. A copy of the notice of termination filed with the state or dated construction site notice, if applicable, in accordance with Chapter 15.

The city will issue a letter stating general conformance to the permit has been met and that the warranty period requirements will continue to be in effect.

(Ord. No. 17516, § 1, 3-29-2011)

18.44.090 – Warranty.

Any person issued a permit shall agree warrant and maintain the area described in the permit for a period of two years after the permit is closed by the city pursuant to Section 18.44.220, or until a building permit is issued for the purpose of maintaining a stabilized site in accordance with the approved GSP, whichever first occurs (the "warranty" or "warranty period"). The city may conduct inspections of the permitted area throughout the warranty period and require maintenance and correction of the work by the permit holder. Failure of the permit holder to correct the work shall constitute a failure to comply with the provisions of this chapter.

(Ord. No. 17516, § 1, 3-29-2011)

100% CONSTRUCTION DOCUMENTS

REFERENCES – BENCHMARKS

BY	REVISIONS	DATE

ENGINEER'S SEAL
STATE OF TEXAS
SERGIO CASTILLO
103721
LICENSED PROFESSIONAL ENGINEER
3/3/16

SCALE
HOR: SHOWN
VER: SHOWN

DATE 03/03/2016
DESIGN BY S.C.
DRAWN BY A.L.
CHKD. BY S.C.
APPD. BY S.C.

PROJECT NAME
NORTHGATE TRANSFER CENTER
EL PASO TEXAS

CITY OF EL PASO
CAPITAL IMPROVEMENT DEPARTMENT

Sustainable Engineering Resource Group, LLC
221 N. Kansas St., Suite 700 | El Paso, TX 79901
T 915.875.1990 | F 915.603.4290
www.sergroupusa.com
ENGINEERING FIRM NO. F-12603
SER Group, Llc

SHEET TITLE
GRADING PLAN

SHEET
C200

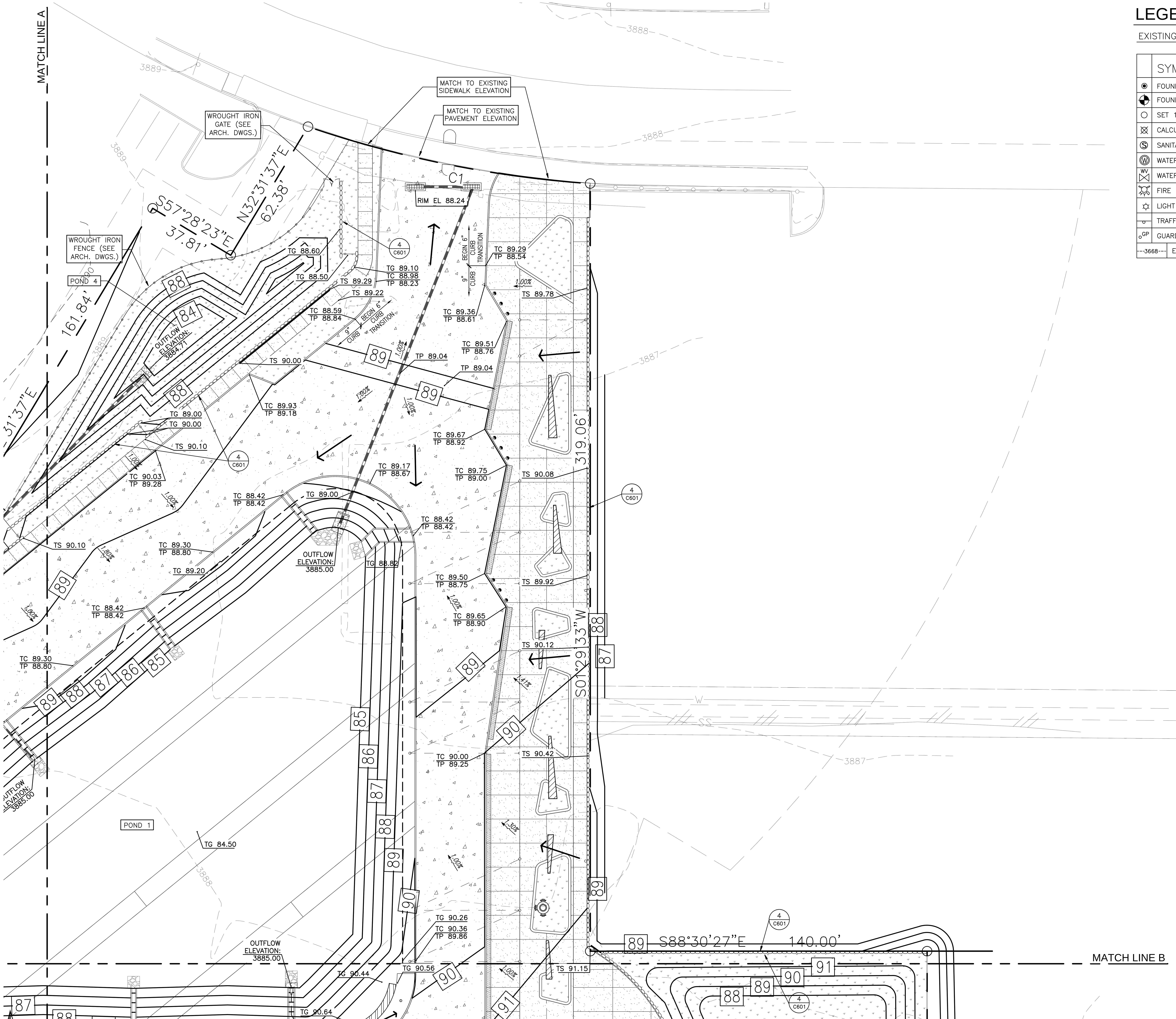

1 ENLARGED GRADING PLAN

SCALE: 1"=20'-0"

LEGEND:

EXISTING CONDITIONS:

SYMBOL LEGEND
FOUND CONTROL POINT
FOUND CITY MONUMENT
SET 1/2" REBAR W/CAP 6085
CALCULATED POINT (NOT SET)
SANITARY SEWER MANHOLE
WATER MANHOLE
WATER VALVE
FIRE HYDRANT
LIGHT POLE
TRAFFIC SIGN
GUARD POST
-3668- EXISTING CONTOURS

PROPOSED CONDITIONS:

- G 3741.85 NEW GUTTER ELEV.
- TG 3741.85 NEW TOP OF GROUND ELEV.
- TS 3741.85 NEW TOP OF SLAB ELEV.
- TP 3741.85 NEW TOP OF PAVEMENT ELEV.
- TC 3741.85 NEW TOP OF CURB ELEV.
- FFE FINISH FLOOR ELEVATION
- 540.00 NEW CONTOURS IN FEET
- WATER RUNOFF FLOW ARROW
- 1.0% SLOPE PERCENTAGE AND DIRECTION
- PROPERTY LINE
- SETBACK
- 4" LIGHT DUTY CONCRETE (SIDEWALK)
- 10" HEAVY DUTY CONCRETE (DRIVEWAY, DUMPSTER)
- ASPHALT PAVEMENT
- LANDSCAPE (SEE LANDSCAPE PLANS)
- PUBLIC STREET EXTENSION NOT PART OF THIS CONTRACT
- 7" HEAVY DUTY CONCRETE (DUMPSTER, FOOD TRUCKS)
- ADA TRUNCATED DOME SURFACE (SEE ARCHITECTURAL DWGS.)
- PROPOSED ROCKWALL
- PROPOSED WROUGHT IRON FENCE (SEE ARCH. DWGS.)
- PROPOSED CONC. WALL (SEE ARCH. DWGS.)
- PROPOSED CONC. BENCH (SEE ARCH. DWGS.)
- STORM WATER CONCRETE PIPE: RCP CLASS IV
- GRATE INLET
- CURB INLET
- PVC STORM WATER PVC PIPE: A-2000 (PLAZA AREA ONLY)

FEMA AND PLAT NOTES:

1. EXISTING FEMA BOUNDARIES AND EXISTING EASEMENTS WITHIN THIS DEVELOPMENT ARE NOT SHOWN ON THIS SHEET SINCE THE CITY OF EL PASO IS COORDINATING A PHYSICAL MAP REVISION WITH FEMA. IN ADDITION, THE CITY OF EL PASO IS COORDINATING A REPLAT TO VACATE EASEMENTS WITHIN THIS DEVELOPMENT.

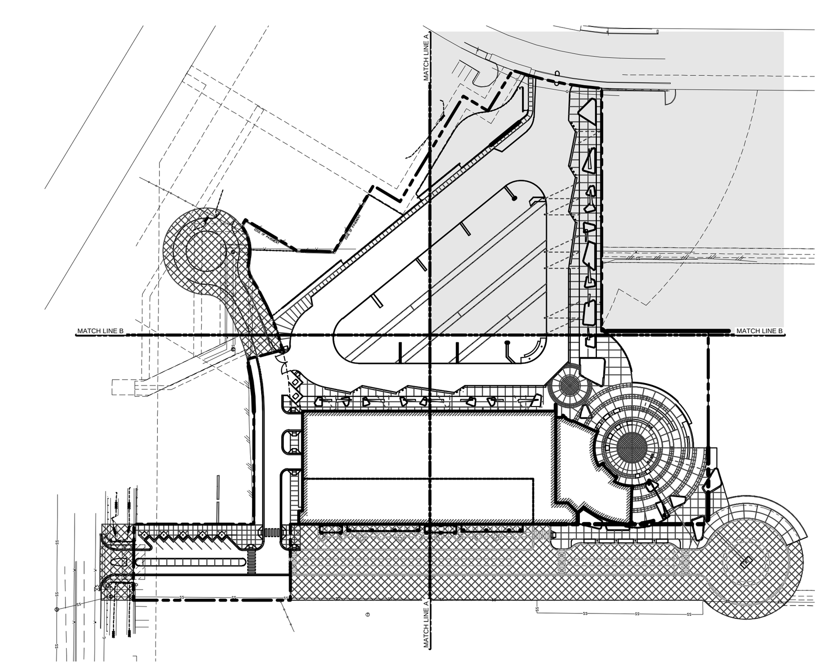

KEY PLAN

NOT TO SCALE

SER Group, Llc

Sustainable Engineering Resource Group, LLC
221 N. Kansas St., Suite 700 El Paso, TX 79901
T 915.875.1990 | F 915.603.4290
www.sergroupusa.com
ENGINEERING FIRM NO. F-12428

100% CONSTRUCTION DOCUMENTS

REFERENCES – BENCHMARKS

REVISIONS | DATE | BY

ENGINEER'S SEAL

SERGIO CASTILLO 3/3/16

SCALE HOR: SHOWN VER: SHOWN

DATE 03/03/2016
DESIGN BY S.C.
DRAWN BY R.M.
CHKD. BY S.C.
APPD. BY S.C.

PROJECT NAME

NORTHGATE TRANSFER CENTER

EL PASO TEXAS

CITY OF EL PASO

CAPITAL IMPROVEMENT DEPARTMENT

SHEET TITLE

ENLARGED GRADING PLAN

SHEET

C201

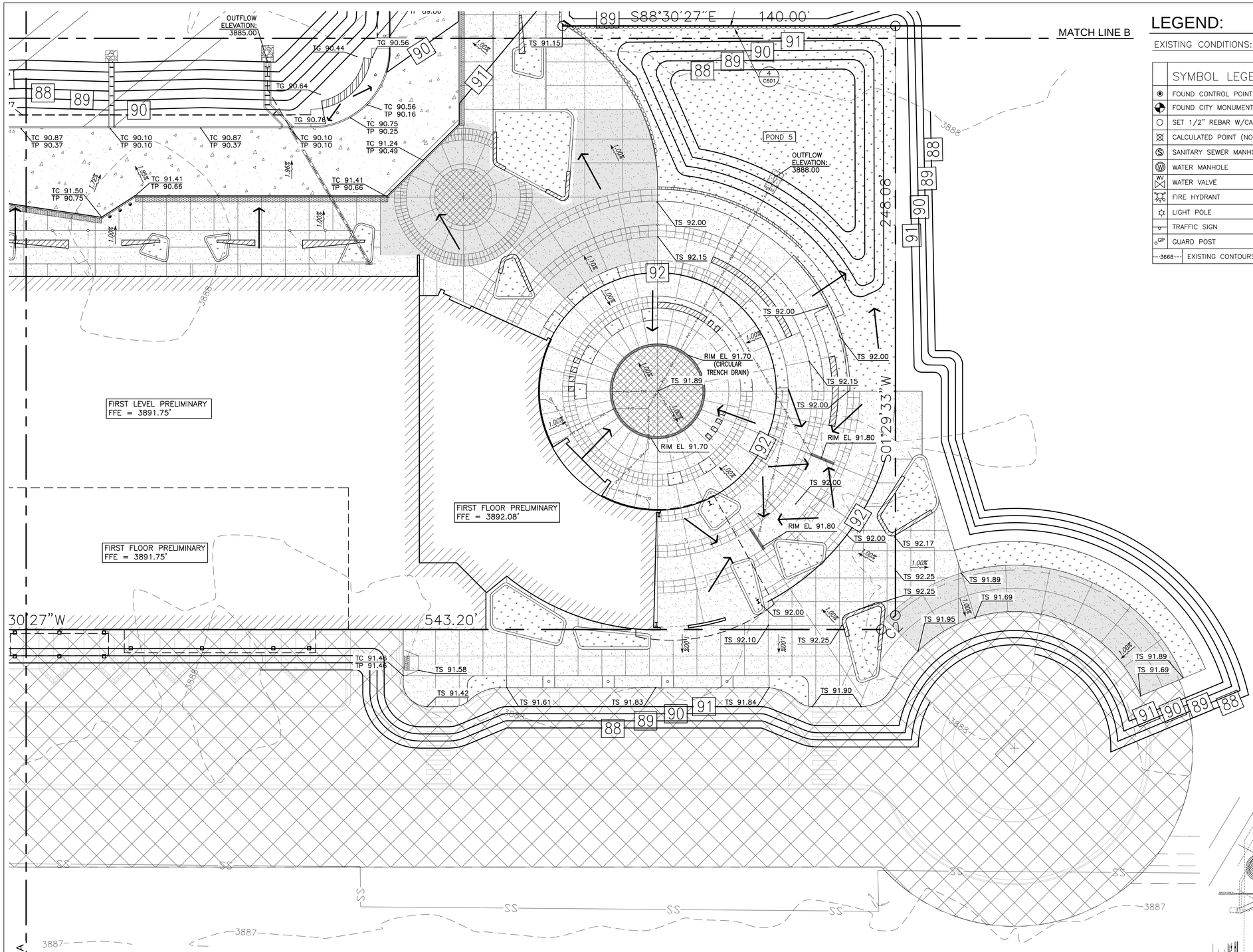

MATCH LINE A

1 ENLARGED GRADING PLAN

SCALE: 1"=20'-0"

LEGEND:

EXISTING CONDITIONS:

SYMBOL LEGEND	
	FOUND CONTROL POINT
	FOUND CITY MONUMENT
	SET 1/2" REBAR W/CAP 6085
	CALCULATED POINT (NOT SET)
S	SANITARY SEWER MANHOLE
W	WATER MANHOLE
WV	WATER VALVE
	FIRE HYDRANT
	LIGHT POLE
	TRAFFIC SIGN
GP	GUARD POST
3668	EXISTING CONTOURS

PROPOSED CONDITIONS:

- G 3741.85 — NEW GUTTER ELEV.
- TG 3741.85 — NEW TOP OF GROUND ELEV.
- TS 3741.85 — NEW TOP OF SLAB ELEV.
- TP 3741.85 — NEW TOP OF PAVEMENT ELEV.
- TC 3741.85 — NEW TOP OF CURB ELEV.
- FFE — FINISH FLOOR ELEVATION
- 540.00 — NEW CONTOURS IN FEET
- WATER RUNOFF FLOW ARROW
- 1.0% — SLOPE PERCENTAGE AND DIRECTION
- PROPERTY LINE
- SETBACK
- 4" LIGHT DUTY CONCRETE (SIDEWALK)
- 10" HEAVY DUTY CONCRETE (DRIVEWAY, DUMPSTER)
- ASPHALT PAVEMENT
- LANDSCAPE (SEE LANDSCAPE PLANS)
- PUBLIC STREET EXTENSION NOT PART OF THIS CONTRACT
- 7" HEAVY DUTY CONCRETE (DUMPSTER, FOOD TRUCKS)
- ADA TRUNCATED DOME SURFACE (SEE ARCHITECTURAL DWGS.)
- PROPOSED ROCKWALL
- PROPOSED WROUGHT IRON FENCE (SEE ARCH. DWGS.)
- PROPOSED CONC. WALL (SEE ARCH. DWGS.)
- PROPOSED CONC. BENCH (SEE ARCH. DWGS.)
- STORM WATER CONCRETE PIPE: RCP CLASS IV
- GRATE INLET
- CURB INLET
- PVC — STORM WATER PVC PIPE: A-2000 (PLAZA AREA ONLY)

FEMA AND PLAT NOTES:

1. EXISTING FEMA BOUNDARIES AND EXISTING EASEMENTS WITHIN THIS DEVELOPMENT ARE NOT SHOWN ON THIS SHEET SINCE THE CITY OF EL PASO IS COORDINATING A PHYSICAL MAP REVISION WITH FEMA. IN ADDITION, THE CITY OF EL PASO IS COORDINATING A REPLAT TO VACATE EASEMENTS WITHIN THIS DEVELOPMENT.

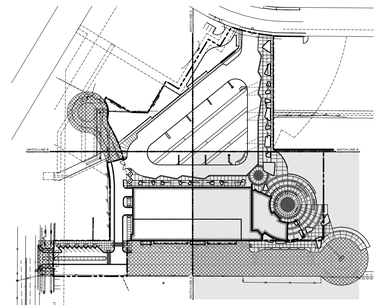

KEY PLAN

NOT TO SCALE

Sustainable Engineering Resource Group, LLC
221 N. Kansas St., Suite 700 | El Paso, TX. 79901
T 915.875-1990 | F 915.603.4290
www.sergroupusa.com
ENGINEERING FIRM NO. F-12625

SER Group, Llc

100% CONSTRUCTION DOCUMENTS

REFERENCES – BENCHMARKS

BY	REVISIONS	DATE

ENGINEER'S SEAL

3/3/16

SCALE
HOR: SHOWN
VER: SHOWN

DATE	03/03/2016
DESIGN BY	S.C.
DRAWN BY	M.L.
CHKD. BY	S.C.
APPD. BY	S.C.

PROJECT NAME

NORTHGATE TRANSFER CENTER

EL PASO TEXAS

CITY OF EL PASO

CAPITAL IMPROVEMENT DEPARTMENT

SHEET TITLE

ENLARGED GRADING PLAN

SHEET

C202

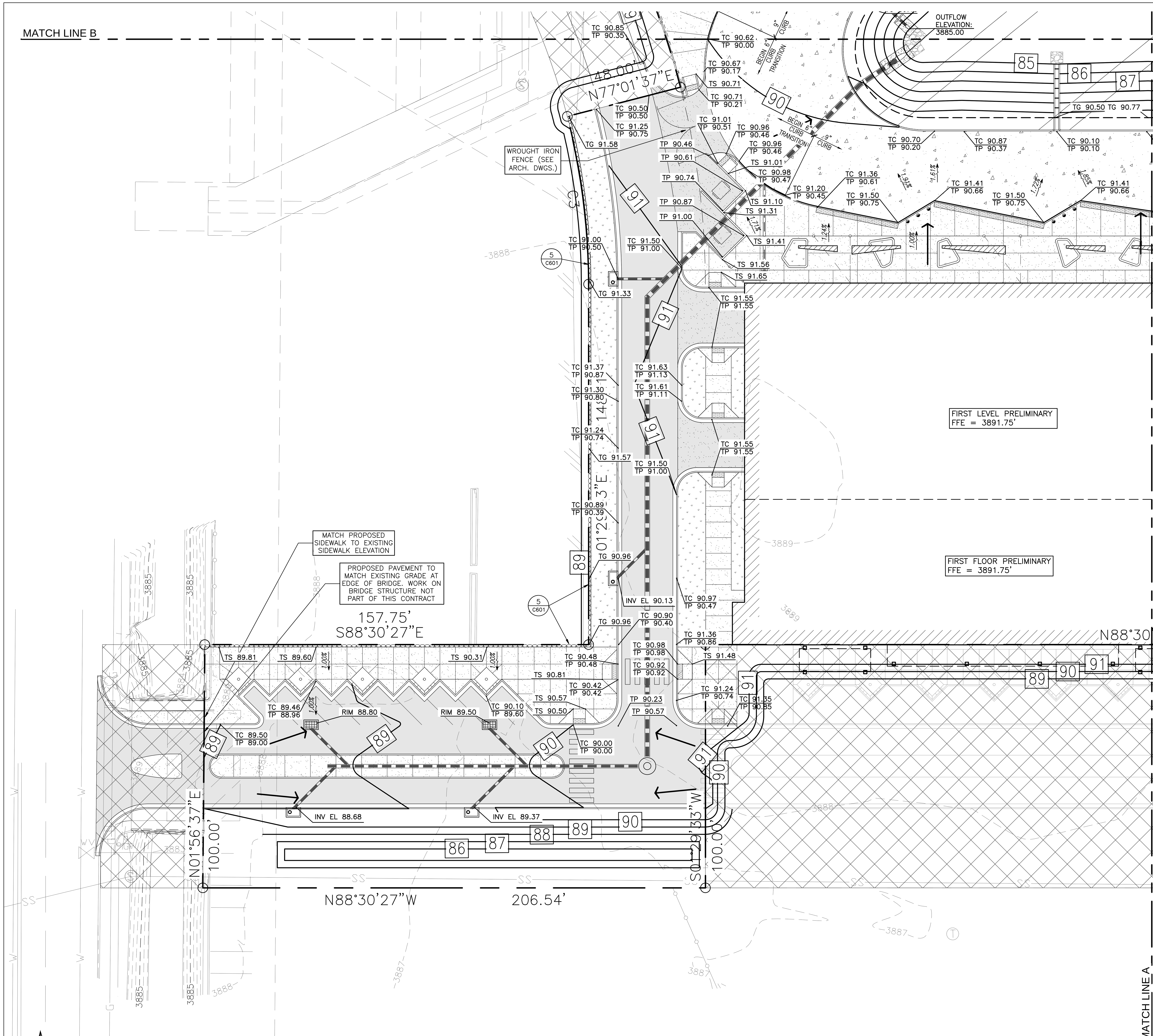

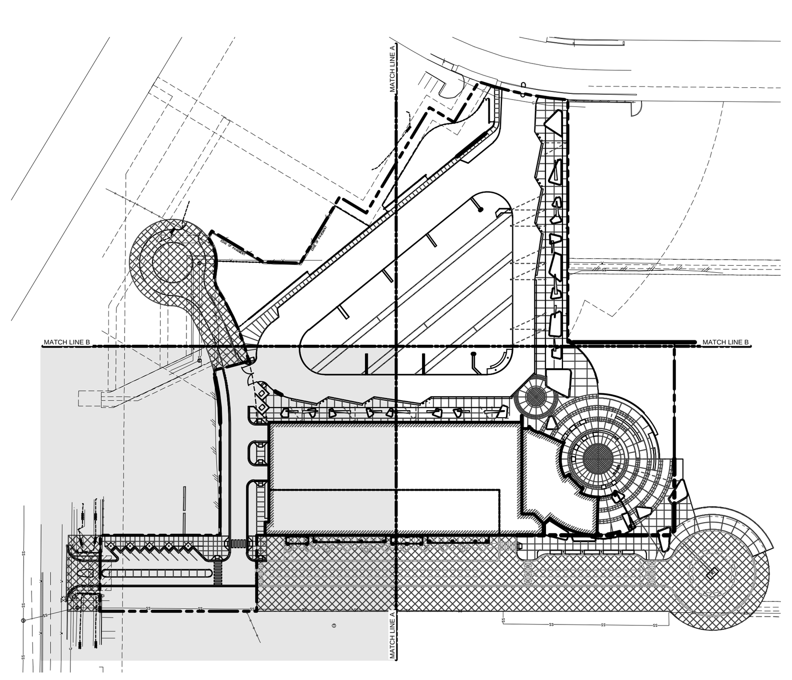

1 ENLARGED GRADING PLAN
SCALE: 1"=20'-0"

LEGEND:

EXISTING CONDITIONS:

SYMBOL LEGEND
FOUND CONTROL POINT
FOUND CITY MONUMENT
SET 1/2" REBAR W/CAP 6085
CALCULATED POINT (NOT SET)
SANITARY SEWER MANHOLE
WATER MANHOLE
WATER VALVE
FIRE HYDRANT
LIGHT POLE
TRAFFIC SIGN
GUARD POST
EXISTING CONTOURS

PROPOSED CONDITIONS:

G 3741.85	NEW GUTTER ELEV.
TG 3741.85	NEW TOP OF GROUND ELEV.
TS 3741.85	NEW TOP OF SLAB ELEV.
TP 3741.85	NEW TOP OF PAVEMENT ELEV.
TC 3741.85	NEW TOP OF CURB ELEV.
FFE	FINISH FLOOR ELEVATION
540.00	NEW CONTOURS IN FEET
	WATER RUNOFF FLOW ARROW
1.0%	SLOPE PERCENTAGE AND DIRECTION
	PROPERTY LINE
	SETBACK
	4" LIGHT DUTY CONCRETE (SIDEWALK)
	10" HEAVY DUTY CONCRETE (DRIVEWAY, DUMPSTER)
	ASPHALT PAVEMENT
	LANDSCAPE (SEE LANDSCAPE PLANS)
	PUBLIC STREET EXTENSION NOT PART OF THIS CONTRACT
	7" HEAVY DUTY CONCRETE (DUMPSTER, FOOD TRUCKS)
	ADA TRUNCATED DOME SURFACE (SEE ARCHITECTURAL DWGS.)
	PROPOSED ROCKWALL
	PROPOSED WROUGHT IRON FENCE (SEE ARCH. DWGS.)
	PROPOSED CONC. WALL (SEE ARCH. DWGS.)
	PROPOSED CONC. BENCH (SEE ARCH. DWGS.)
	STORM WATER CONCRETE PIPE: RCP CLASS IV
	GRATE INLET
	CURB INLET
PVC	STORM WATER PVC PIPE: A-2000 (PLAZA AREA ONLY)

FEMA AND PLAT NOTES:

1. EXISTING FEMA BOUNDARIES AND EXISTING EASEMENTS WITHIN THIS DEVELOPMENT ARE NOT SHOWN ON THIS SHEET SINCE THE CITY OF EL PASO IS COORDINATING A PHYSICAL MAP REVISION WITH FEMA. IN ADDITION, THE CITY OF EL PASO IS COORDINATING A REPLAT TO VACATE EASEMENTS WITHIN THIS DEVELOPMENT.

Sustainable Engineering Resource Group, LLC
221 N. Kansas St. Suite 700 El Paso, TX 79901
T 915.875.1990 | F 915.633.4290
www.sergroupusa.com
ENGINEERING FIRM NO. F-12828
SER Group, Llc

100% CONSTRUCTION DOCUMENTS

REFERENCES - BENCHMARKS | DATE | REVISIONS | BY

ENGINEER'S SEAL: SERGIO CASTILLO 98621 LICENSED PROFESSIONAL ENGINEER, 3/3/16

SCALE: HOR: SHOWN VER: SHOWN
DATE: 03/03/2016
DESIGN BY: S.C.
DRAWN BY: R.M.
CHKD. BY: S.C.
APPD. BY: S.C.

PROJECT NAME: NORTHGATE TRANSFER CENTER
EL PASO TEXAS

CITY OF EL PASO
CAPITAL IMPROVEMENT DEPARTMENT

SHEET TITLE: ENLARGED GRADING PLAN

SHEET C203

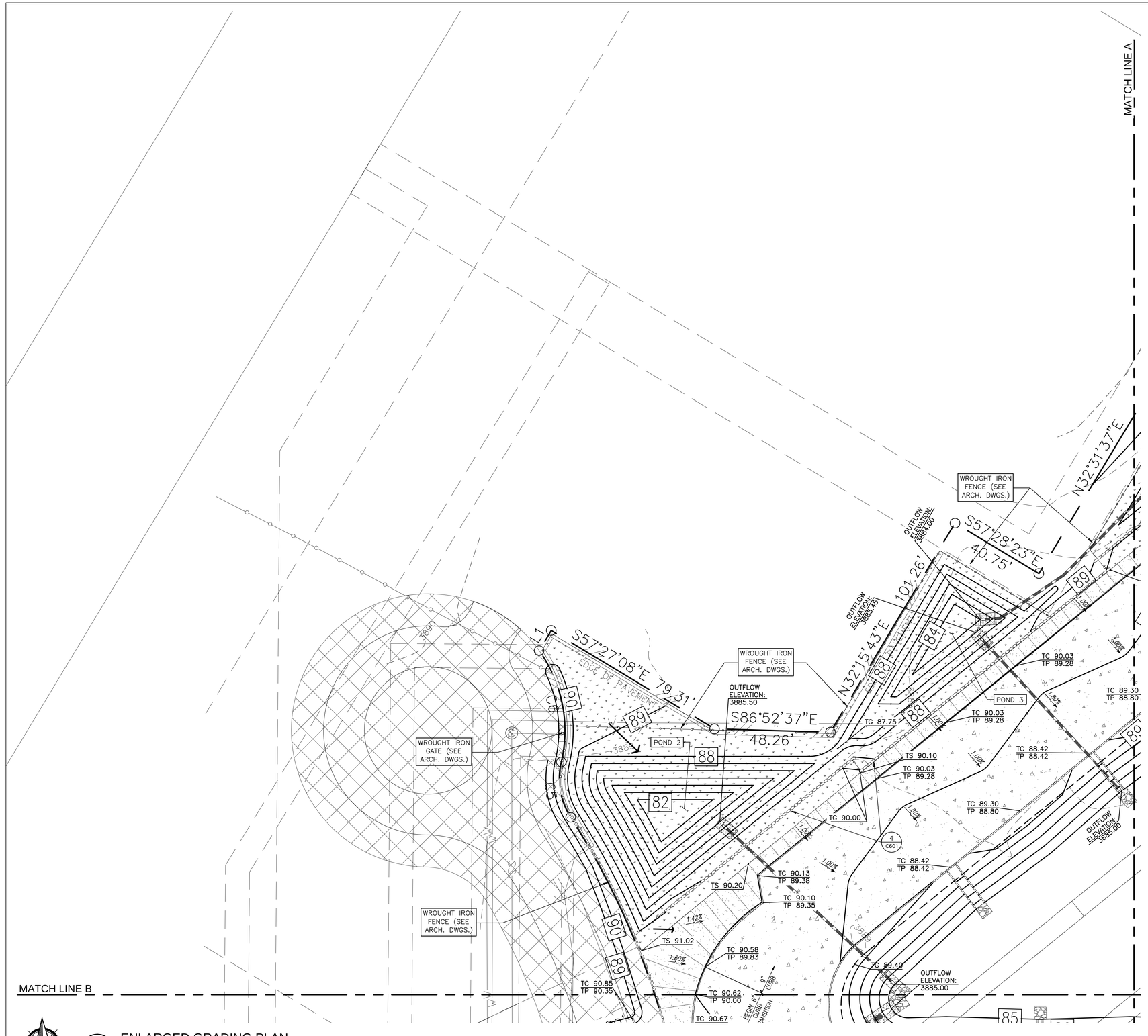

1 ENLARGED GRADING PLAN

SCALE: 1"=20'-0"

LEGEND:

EXISTING CONDITIONS:

	SYMBOL LEGEND
	FOUND CONTROL POINT
	FOUND CITY MONUMENT
	SET 1/2" REBAR W/CAP 6085
	CALCULATED POINT (NOT SET)
S	SANITARY SEWER MANHOLE
W	WATER MANHOLE
WV	WATER VALVE
	FIRE HYDRANT
	LIGHT POLE
	TRAFFIC SIGN
GP	GUARD POST
3668	EXISTING CONTOURS

PROPOSED CONDITIONS:

- G 3741.85 — NEW GUTTER ELEV.
- TG 3741.85 — NEW TOP OF GROUND ELEV.
- TS 3741.85 — NEW TOP OF SLAB ELEV.
- TP 3741.85 — NEW TOP OF PAVEMENT ELEV.
- TC 3741.85 — NEW TOP OF CURB ELEV.
- FFE — FINISH FLOOR ELEVATION
- 540.00 — NEW CONTOURS IN FEET
- WATER RUNOFF FLOW ARROW
- 1.0% — SLOPE PERCENTAGE AND DIRECTION
- PROPERTY LINE
- SETBACK
- 4" LIGHT DUTY CONCRETE (SIDEWALK)
- 10" HEAVY DUTY CONCRETE (DRIVEWAY, DUMPSTER)
- ASPHALT PAVEMENT
- LANDSCAPE (SEE LANDSCAPE PLANS)
- PUBLIC STREET EXTENSION NOT PART OF THIS CONTRACT
- 7" HEAVY DUTY CONCRETE (DUMPSTER, FOOD TRUCKS)
- ADA TRUNCATED DOME SURFACE (SEE ARCHITECTURAL DWGS.)
- PROPOSED ROCKWALL
- PROPOSED WROUGHT IRON FENCE (SEE ARCH. DWGS.)
- PROPOSED CONC. WALL (SEE ARCH. DWGS.)
- PROPOSED CONC. BENCH (SEE ARCH. DWGS.)
- STORM WATER CONCRETE PIPE: RCP CLASS IV
- GRATE INLET
- CURB INLET
- PVC — STORM WATER PVC PIPE: A-2000 (PLAZA AREA ONLY)

FEMA AND PLAT NOTES:

1. EXISTING FEMA BOUNDARIES AND EXISTING EASEMENTS WITHIN THIS DEVELOPMENT ARE NOT SHOWN ON THIS SHEET SINCE THE CITY OF EL PASO IS COORDINATING A PHYSICAL MAP REVISION WITH FEMA. IN ADDITION, THE CITY OF EL PASO IS COORDINATING A REPLAT TO VACATE EASEMENTS WITHIN THIS DEVELOPMENT.

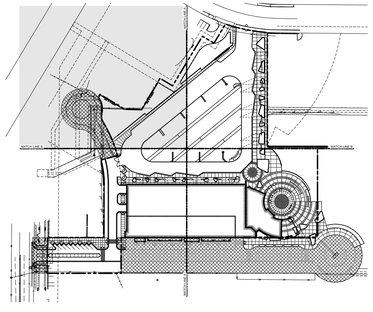

KEY PLAN

NOT TO SCALE

100% CONSTRUCTION DOCUMENTS

Sustainable Engineering Resource Group, LLC.
221 N. Kansas St., Suite 7000 El Paso, TX 79901
T 915.875.1990 | F 915.603.4290
www.sergroupusa.com
ENGINEERING FIRM NO. F-12625

SER Group, Llc

REFERENCES – BENCHMARKS

BY	REVISIONS	DATE

ENGINEER'S SEAL

STATE OF TEXAS — SERGIO E. CASTILLO — 86421 — LICENSED PROFESSIONAL ENGINEER — 3/3/16

SCALE
HOR: SHOWN
VER: SHOWN

DATE 03/03/2016
DESIGN BY S.C.
DRAWN BY M.L.
CHKD. BY S.C.
APPD. BY S.C.

PROJECT NAME

NORTHGATE TRANSFER CENTER

EL PASO TEXAS

CITY OF EL PASO

CAPITAL IMPROVEMENT DEPARTMENT

SHEET TITLE

ENLARGED GRADING PLAN

SHEET

C204

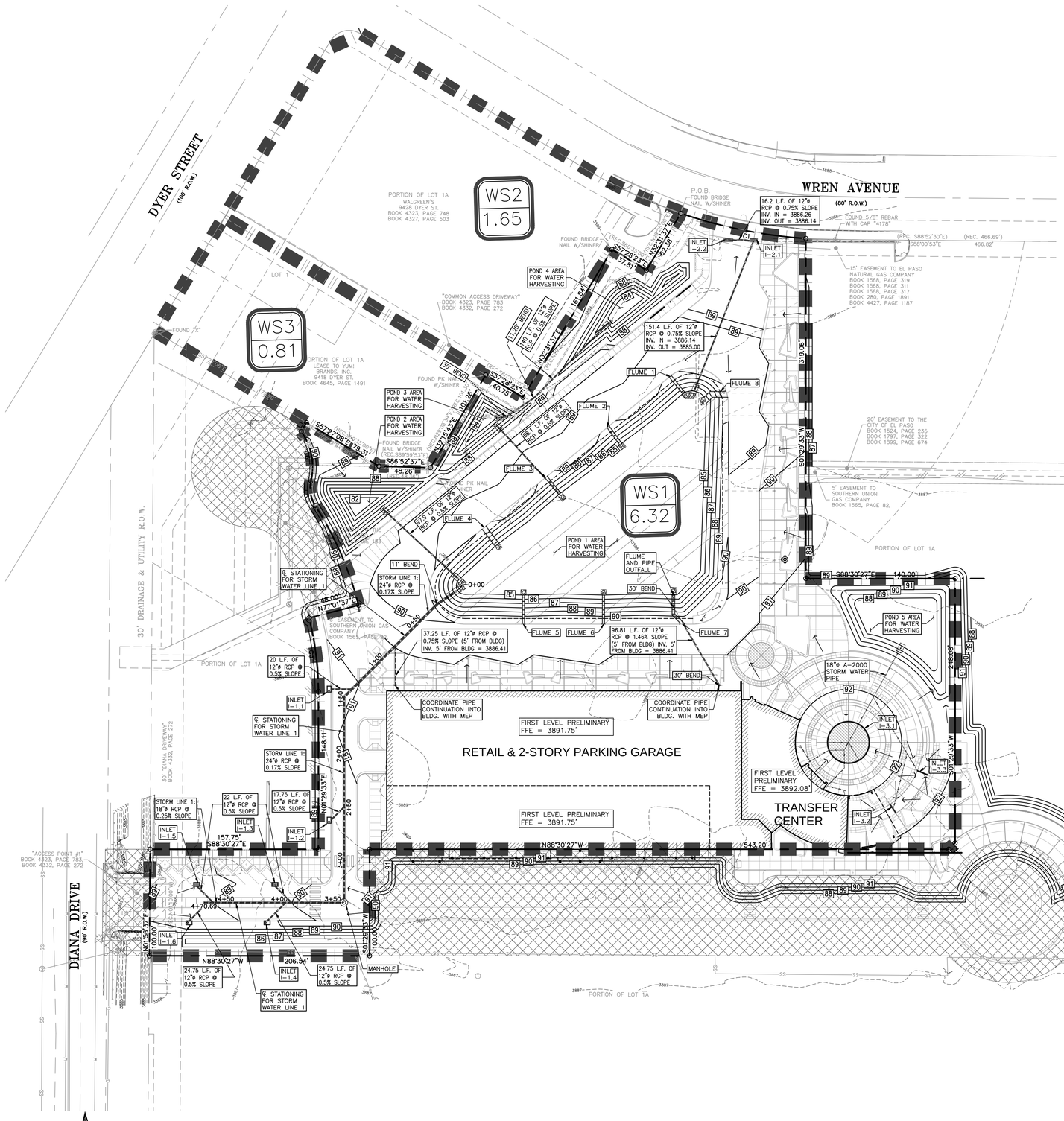

LEGEND:

EXISTING CONDITIONS:

	SYMBOL LEGEND
◉	FOUND CONTROL POINT
⊕	FOUND CITY MONUMENT
○	SET 1/2" REBAR W/CAP 6085
⊠	CALCULATED POINT (NOT SET)
Ⓢ	SANITARY SEWER MANHOLE
Ⓦ	WATER MANHOLE
WV	WATER VALVE
	FIRE HYDRANT
	LIGHT POLE
	TRAFFIC SIGN
GP	GUARD POST
3668	EXISTING CONTOURS

PROPOSED CONDITIONS:

- FFE — FINISH FLOOR ELEVATION
- 540.00 — NEW CONTOURS IN FEET
- WATERSHED PERIMETER LINE
- WATER RUNOFF FLOW ARROW
- 1.0% — SLOPE PERCENTAGE AND DIRECTION
- WS# / 0.35 — WATERSHED IDENTIFICATION # AREA (AC.)
- PROPERTY LINE
- SETBACK
- PUBLIC STREET EXTENSION NOT PART OF THIS CONTRACT
- PROPOSED ROCKWALL
- PROPOSED WROUGHT IRON FENCE (SEE ARCH. DWGS.)
- STORM WATER CONCRETE PIPE: RCP CLASS IV
- GRATE INLET
- CURB INLET
- PVC — STORM WATER PVC PIPE: A-2000 (PLAZA AREA ONLY)

STORM DRAIN PIPES:
ALL STORM WATER PIPES SHALL BE CONCRETE RCP CLASS IV, ONLY STORM WATER PIPES WITHIN PLAZA AREA SHALL BE A-2000 PVC PIPE.

SITE DESIGN STORM DRAINAGE CALCULATION
TABLE 100 YEAR DESIGN FREQUENCY

RATIONAL FORMULA (BASED ON CITY OF EL PASO DRAINAGE DESIGN MANUAL, JUNE 2008):

Q = CIA,
WHERE,
Q = DISCHARGE RATE (CFS)
C = 0.95 FOR COMMERCIAL
$I_{100} = 111.04/(T_C+26.09)^{0.9177}$ (CENTRAL INTENSITY EQUATION) = 4.13
T_C = 10 MIN.

PROPOSED CONDITIONS

	AREA (ac.)	C	T (MIN.)	I	DISCHARGE RATE (cfs)
WS1 = COMMERCIAL	6.319	0.95	10	4.13	24.79
WS2 = COMMERCIAL	1.651	0.95	10	4.13	6.48
WS3 = COMMERCIAL	0.811	0.95	10	4.13	3.18
				TOTAL:	34.45

POND DESIGN

TOTAL RUNOFF FORMULA: QT=ARC/12

QT = TOTAL RUNOFF IN ACRE-FEET
A = 100% OF WATERSHED AREA IN ACRES
R = RAINFALL IN INCHES (4" IN 3 HRS.)
C = RUNOFF FACTOR INCHES (C=0.95 FOR COMMERCIAL)

THUS, QT = (A)(4")(C)/12

PROPOSED POND STORAGE CAPACITY CALCULATION TABLE

	AREA (ACRES)	C	Q_{REQ} (AC-FT)	Q_{CAP} (AC-FT)
PONDS 1-4	7.901	0.95	2.502	2.616
POND 5	0.881	0.95	0.279	0.368

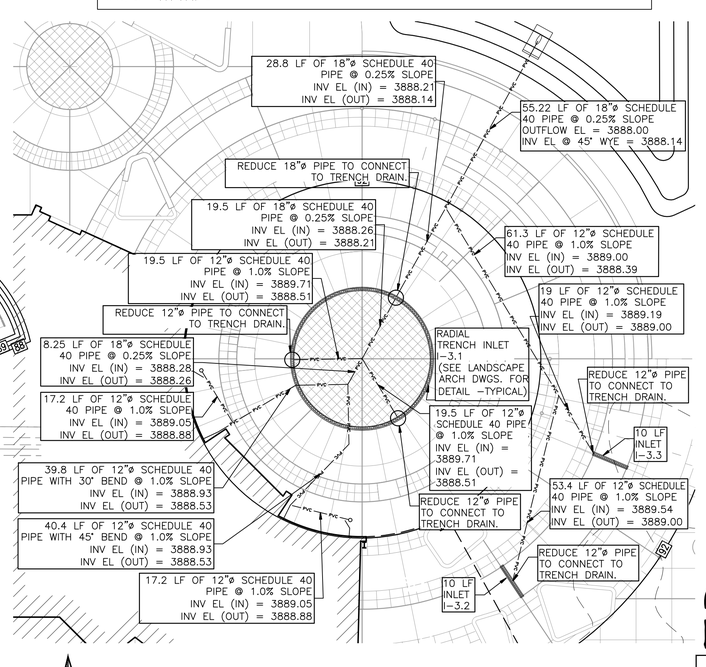

1 DRAINAGE PLAN
SCALE: 1"=50'-0"

2 ENLARGED DRAINAGE PLAN AT PLAZA
SCALE: 1"=20'-0"

100% CONSTRUCTION DOCUMENTS

REFERENCES – BENCHMARKS

BY	REVISIONS	DATE

ENGINEER'S SEAL
STATE OF TEXAS
SERGIO CASTILLO
103421
LICENSED PROFESSIONAL ENGINEER
3/3/16

SCALE
HOR: SHOWN
VER: SHOWN

DATE 03/03/2016
DESIGN BY S.C.
DRAWN BY S.C.
CHKD. BY S.C.
APPD. BY S.C.

PROJECT NAME
NORTHGATE TRANSFER CENTER
EL PASO TEXAS

CITY OF EL PASO
CAPITAL IMPROVEMENT DEPARTMENT

SHEET TITLE
DRAINAGE PLAN

SHEET
C300

SER Group, LLC
Sustainable Engineering Resource Group, LLC
221 N. Kansas St., Suite 7000 El Paso, TX. 79901
T 915.875.1990 F 915.408.4290
www.sergroupusa.com
ENGINEERING FIRM NO. F-12628

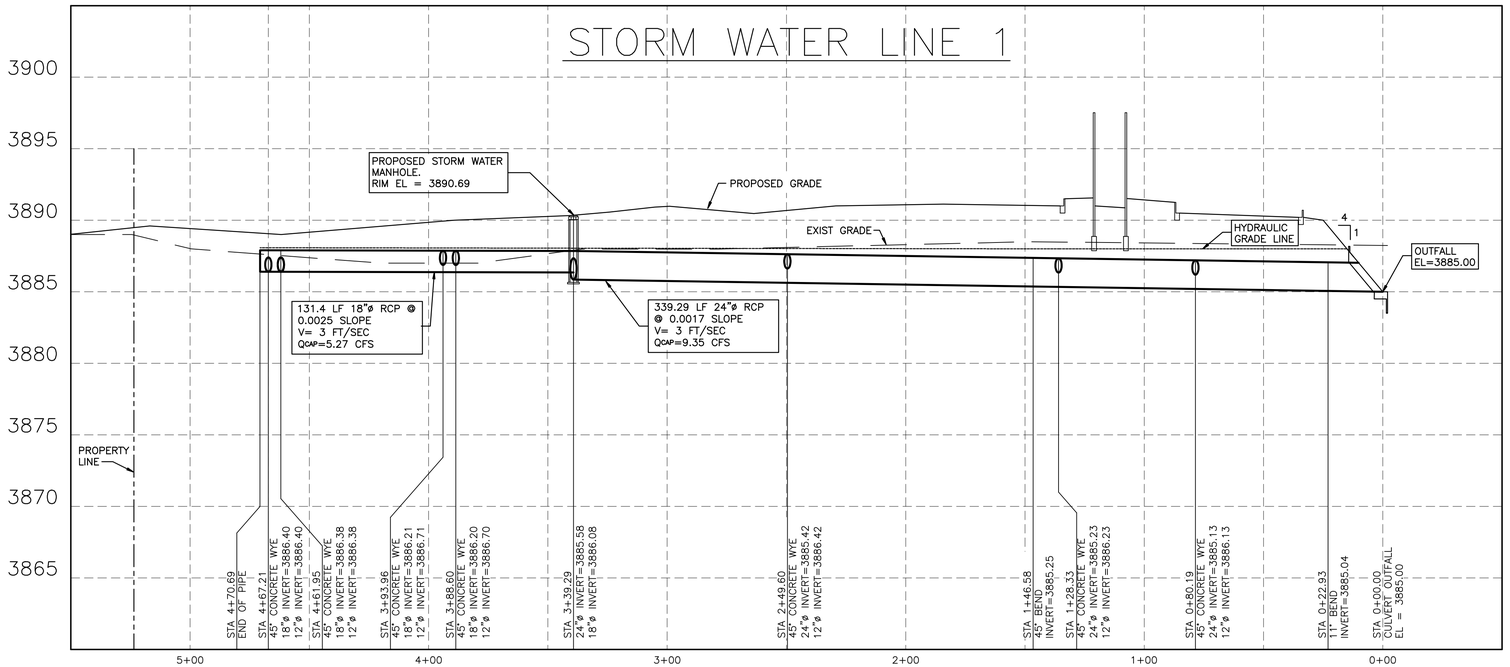

1 STORM WATER LINE PROFILE

SCALE: HORIZONTAL 1"=30'-0"
VERTICAL 1"=5'-0"

REFERENCES -- BENCHMARKS

BY	DATE	REVISIONS

ENGINEER'S SEAL

SCALE
HOR: SHOWN
VER: SHOWN

DATE 03/03/2016
DESIGN BY S.C.
DRAWN BY M.L.
CHKD. BY S.C.
APPD. BY S.C.

PROJECT NAME

NORTHGATE TRANSFER CENTER

EL PASO TEXAS

CITY OF EL PASO

CAPITAL IMPROVEMENT DEPARTMENT

SHEET TITLE

STORM WATER LINE 1 PROFILE

SHEET

C301

Sustainable Engineering Resource Group, LLC
221 N. Kansas St., Suite 700 | El Paso, TX 79901
T 915.875.1990 | F 915.603.4290
www.sergroupusa.com
ENGINEERING FIRM NO. F-13603

SER Group, Llc

100% CONSTRUCTION DOCUMENTS

HYDRAULIC COMPUTATIONS FOR STORM DRAINS

MANHOLE OR INLET DESIGN PT. FROM	MANHOLE OR INLET DESIGN PT. TO	DISTANCE BETWEEN MANHOLE OR INLET (ft)	DRAINAGE AREA – INCREMENTAL AREA – AREA NO.	AREA (S.F.)	NO. OF ACRES	TOTAL AREA (ac)	COEFFICIENT OF RUNOFF 'C'	INCREMENTAL 'CA'	TOTAL 'CA'	TIME OF CONCENTRATION – INLET TIME (MIN.)	FLOW TIME IN SEWER (MIN)	TOTAL TIME (MIN)	DESIGN FREQUENCY (yrs)	INTENSITY (in/hr)	DESIGN DISCHARGE (cfs)	SELECTED SIZE OF PIPE (in)	FRICTIONAL GRADIENT SLOPE Sf (ft/ft)	HYDRAULIC – UP-STREAM (ft MSL)	DOWN-STREAM (ft MSL)	HEAD LOSS AT CHANGE IN SECTION – INFLOW VELOCITY V1 (fps)	OUTFLOW VELOCITY V2 (fps)	V1^2 /2g (ft)	V2^2 /2g (ft)	Kj	KjV1^2 /2g (ft)	hj	H.G ELEVATION AT DESIGN POINT (ft MSL)	ELEV. OF INVERT AT – IN-COMING PIPE (ft MSL)	OUT-GOING PIPE (ft MSL)	COMMENTS
STORM LINE '1' - Main Street to Main Pond																														
I-1.6	I-1.5	5.26	WS1	5379.47	0.12	0.12	0.95	0.12	0.12	10.0	0.0	10.0	100	4.13	0.5	18	0.0000	3888.08	3888.08	0.00	0.27	0.00	0.00	0.75	0.00	0.00	3888.08	3886.40	3886.38	100-YR
I-1.5	I-1.4	67.99	WS1	5374.93	0.12	0.12	0.95	0.12	0.23	10.0	0.3	10.3	100	4.13	1.0	18	0.0001	3888.08	3888.07	0.27	0.55	0.00	0.00	0.75	0.00	0.00	3888.08	3886.38	3886.21	100-YR
I-1.4	I-1.3	5.36	WS1	4959.79	0.11	0.11	0.95	0.11	0.34	10.3	2.1	12.4	100	4.13	1.4	18	0.0002	3888.06	3888.06	0.55	0.80	0.00	0.01	0.75	0.00	0.01	3888.07	3886.21	3886.20	100-YR
I-1.3	MH 1	49.31	WS1	4577.56	0.11	0.11	0.95	0.10	0.44	12.4	0.1	12.5	100	4.13	1.8	18	0.0003	3888.05	3888.04	0.80	1.03	0.01	0.02	0.75	0.01	0.01	3888.06	3886.20	3886.08	100-YR
MH 1	I-1.2	89.69	WS1	0	0.00	0.00	0.95	0.00	0.44	12.5	0.8	13.3	100	4.13	1.8	24	0.0001	3888.03	3888.02	1.03	0.58	0.02	0.01	1	0.02	0.01	3888.04	3885.58	3885.42	100-YR
I-1.2	Bend 2	103.02	WS1	7092.67	0.16	0.16	0.95	0.15	0.60	13.3	2.6	15.9	100	4.13	2.5	24	0.000119	3888.02	3888.00	0.58	0.79	0.01	0.01	0.75	0.00	0.01	3888.02	3885.42	3885.25	100-YR
Bend 2	I-1.1	10.65	WS1	0	0.00	0.00	0.95	0.00	0.60	15.9	2.2	18.0	100	4.13	2.5	24	0.000119	3888.00	3888.00	0.79	0.79	0.01	0.01	0.35	0.00	0.01	3888.00	3885.25	3885.23	100-YR
I-1.1	Wye 1	57.39	WS1	4136.32	0.09	0.09	0.95	0.09	0.69	18.0	0.2	18.3	100	4.13	2.8	24	0.000158	3887.99	3887.98	0.79	0.90	0.01	0.01	0.75	0.01	0.01	3888.00	3885.23	3885.13	100-YR
Wye 1	Bend 1	55.61	WS1	24774.36	0.57	0.57	0.95	0.54	1.23	18.3	1.1	19.3	100	4.13	5.1	24	0.000502	3887.95	3887.92	0.90	1.61	0.01	0.04	0.75	0.01	0.03	3887.98	3885.13	3885.04	100-YR
Bend 1	OUTFALL 1	22.93	WS1	0	0.00	0	0.95	0	1.23	19.3	0.6	19.9	100	4.13	5.1	24	0.000502	3887.89	3887.88	1.61	1.61	0.04	0.04	0.2	0.01	0.03	3887.92	3885.04	3885.00	100-YR

Type I Inlet Calculations (Curb Inlets on Grade)

Inlet Type & No.	Watershed ID	Sub-Area Peak Flow Qp (cfs)	Carry-over from upstream	Total Flow Q (cfs)	Flow Depth yo (ft)	Gutter Depression (ft)	H = a+yo (ft)	Capacity per foot of inlet Q/Lo (cfs/ft); Assume 30% Clogged	Length of Inlet Req'd for Qo (ft)	Inlet Length L (ft)	L/Lo	Q/Qo	Flow Intrcptd Q = Qo X	Carry-over flow q (cfs)	Comments
I-1.1	WS1	0.37	0	0.37	0.50	0.15	0.65	0.46	0.80	5	6.24	1	0.37	0	100-YEAR
I-1.2	WS1	0.64	0	0.64	0.50	0.15	0.65	0.46	1.37	5	3.64	1	0.64	0	100-YEAR
I-1.4	WS1	0.45	0	0.45	0.50	0.15	0.65	0.46	0.96	5	5.20	1	0.45	0	100-YEAR
I-1.6	WS1	0.48	0	0.48	0.50	0.15	0.65	0.46	1.04	5	4.80	1	0.48	0	100-YEAR

Type II & Type III Inlet Calculations

INLET NO.	INLET TYPE	X (Length in ft)	Y (Length in ft)	AREA OF INLET OPENING A (sq. ft.)	h = HEAD (ft)	ORIFICE FLOW Q = KA [(2gh)^(1/2)], where K=0.62 & g=32.2 ft/sec	Q (Capacity) in CFS	Q (Expected) in CFS	Grate Safety Factor (Due to Clogging)
I-1.3	III	2.5	3.76	4.70	0.250	11.692	11.69	0.41	28.36
I-1.5	III	2.5	3.76	4.70	0.250	11.692	11.69	0.48	24.15
I-2.1	II	1.97	5.75	5.66	0.250	14.090	14.09	0.56	25.37
I-2.2	II	1.97	5.75	5.66	0.250	14.090	14.09	0.36	38.76

FLUME CAPACITY

Flume Identification	Flume Width in ft (base)	Width in ft (top)	Slope	Water Level Depth (ft)	Area A (ft^2)	Wetted Perimeter P (ft)	Hydraulic Radius R (ft)	Coefficient of Roughness n	Slope of Energy Grade Line S	Velocity (ft/s) V = (1.49/n)*R^(2/3)S^(1/2)	Flow Capacity Q(Cap)=V*A (cfs)	Flow Expected Q(Exp) in cfs
Flume 1	2	2	0	0.5	1	3.00	0.3333	0.013	0.010	5.51	5.51	0.35
Flume 2	2	2	0	0.5	1	3.00	0.3333	0.013	0.010	5.51	5.51	0.39
Flume 3	2	2	0	0.5	1	3.00	0.3333	0.013	0.010	5.51	5.51	0.37
Flume 4	4	4	0	0.5	2	5.00	0.4000	0.013	0.010	6.22	12.44	1.87
Flume 5	1.5	1.5	0	0.5	0.75	2.50	0.3000	0.013	0.010	5.14	3.85	0.43
Flume 6	1.5	1.5	0	0.5	0.75	2.50	0.3000	0.013	0.010	5.14	3.85	0.43
Flume 7	2	2	0	0.5	1	3.00	0.3333	0.013	0.010	5.51	5.51	0.67
Flume 8	5	5	0	0.5	2.5	6.00	0.4167	0.013	0.008	5.64	14.10	2.28

Sustainable Engineering Resource Group, LLC
221 N. Kansas St., Suite 700 | El Paso, TX. 79901
T 915.875.1990 | F 915.603.4290
www.sergroupusa.com
ENGINEERING FIRM NO. F-12621

SER Group, Llc

100% CONSTRUCTION DOCUMENTS

REFERENCES – BENCHMARKS

BY	REVISIONS	DATE

ENGINEER'S SEAL

SCALE
HOR: SHOWN
VER: SHOWN

DATE 03/03/2016
DESIGN BY S.C.
DRAWN BY A.L.
CHKD. BY S.C.
APPD. BY S.C.

PROJECT NAME

NORTHGATE TRANSFER CENTER

EL PASO TEXAS

CITY OF EL PASO

CAPITAL IMPROVEMENT DEPARTMENT

SHEET TITLE

STORM DRAINAGE CALCULATIONS

SHEET

C302

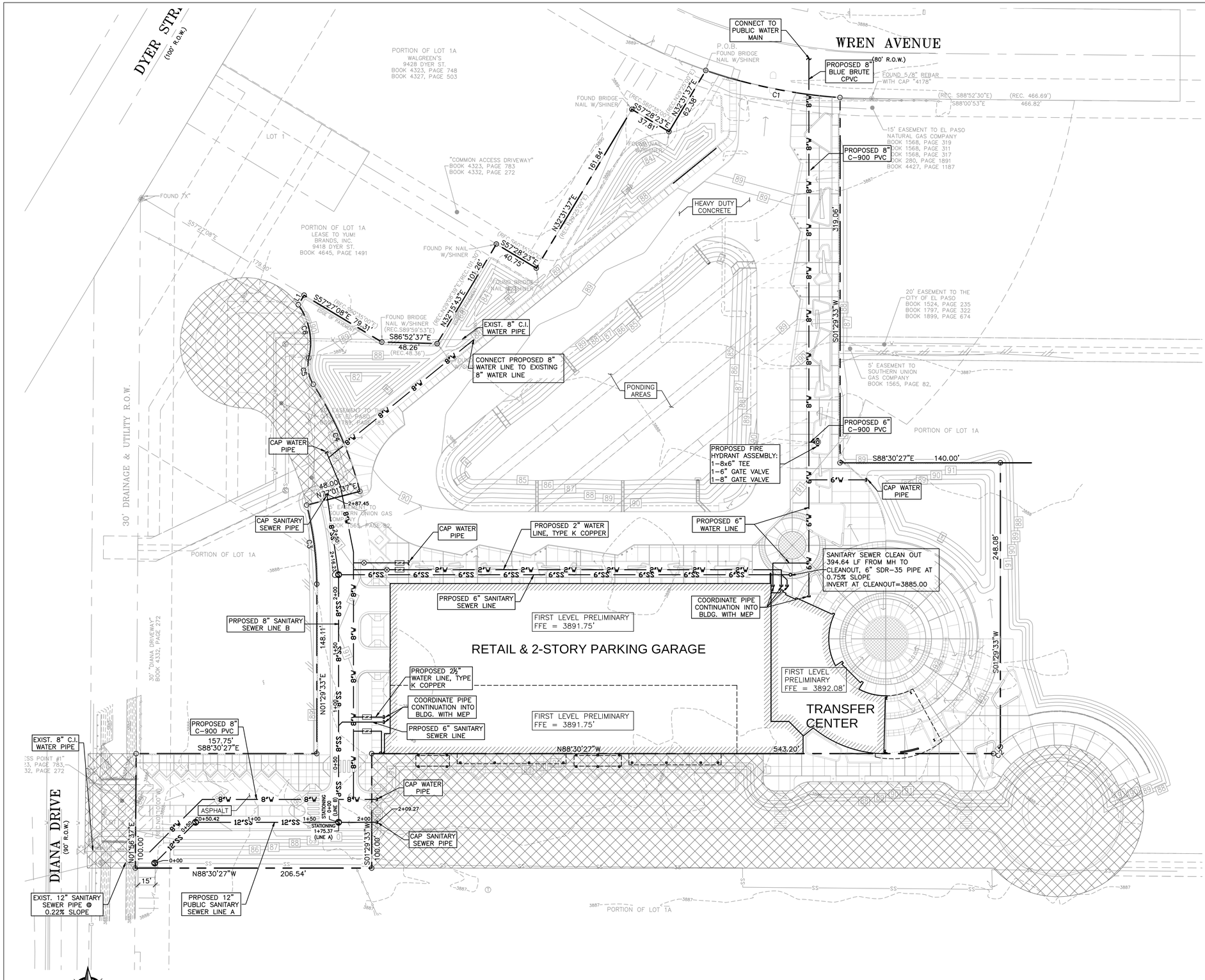

LEGEND:

EXISTING CONDITIONS:

	SYMBOL LEGEND
◉	FOUND CONTROL POINT
◆	FOUND CITY MONUMENT
○	SET 1/2" REBAR W/CAP 6085
⊠	CALCULATED POINT (NOT SET)
Ⓢ	SANITARY SEWER MANHOLE
Ⓦ	WATER MANHOLE
WV	WATER VALVE
	FIRE HYDRANT
☼	LIGHT POLE
▫	TRAFFIC SIGN
GP	GUARD POST
-3668-	EXISTING CONTOURS

WATER NOTES:

1. CONTACT UTILITY COMPANIES FOR EXACT LOCATION OF UNDERGROUND UTILITIES IN THIS AREA, BEFORE EXCAVATION.
2. INSTALL A TRENCH SAFETY SYSTEM TO PROVIDE FOR THE SAFE EXCAVATION OF ALL TRENCHES EXCEEDING A DEPTH OF (5') FIVE FEET AS PER O.S.H.A. STANDARDS.
3. PROVIDE ADEQUATE CONCRETE THRUST BLOCKING AT THE FOLLOWING: TAPPING SLEEVES, TEES, BENDS, PLUGS AND ALL FITTINGS.
4. ALL VALVES ON P.V.C. WATER MAINS SHALL BE ANCHORED IN CONCRETE.
5. P.V.C. PIPE SHALL BE PLACED WITH SELECT BEDDING MATERIAL ALL AROUND.
6. PIPE MATERIAL: AWWA C-900 CLASS 235 (DR-18), UNLESS NOTED OTHERWISE.

SEWER NOTES:

1. CONTACT UTILITY COMPANIES FOR EXACT LOCATION OF UNDERGROUND UTILITIES IN THIS AREA, BEFORE EXCAVATION.
2. INSTALL A TRENCH SAFETY SYSTEM TO PROVIDE FOR THE SAFE EXCAVATION OF ALL TRENCHES EXCEEDING A DEPTH OF (5') FIVE FEET AS PER O.S.H.A. STANDARDS.
3. PROVIDE MANHOLE ADAPTER WHERE P.V.C. PIPE CONNECTS TO MANHOLE.
4. P.V.C. PIPE SHALL BE PLACED WITH SELECT BEDDING MATERIAL ALL AROUND.
5. WATER & SANITARY SEWER MAIN SEPARATION REQUIREMENTS SHALL COMPLY WITH "T.N.R.C.C." MINIMUM VERTICAL SEPARATION REQUIREMENTS.
6. PIPE MATERIAL: PVC ASTM D-3034 SDR-35

LEGEND:

PROPOSED CONDITIONS:

— — —	EASEMENT
8"W	8" WATER LINE
6"W	6" WATER LINE
2"W	2" WATER LINE
12"SS	12" SAN. SWR. LINE
6"SS	6" SAN. SWR. LINE
8"SS	8" SAN. SWR. LINE
Ⓢ	SANITARY SEWER MANHOLE
	FIRE HYDRANT
	WATER METER
	BACKFLOW PREVENTER

THIS SHEET TO BE COORDINATED WITH MEP PLANS FOR WATER AND SANITARY SEWER LINE CONNECTIONS

1 WATER AND SANITARY SEWER PLAN

SCALE: 1"=40'-0"

100% CONSTRUCTION DOCUMENTS

Sustainable Engineering Resource Group, LLC
221 N. Kansas St., Suite 700 El Paso, TX. 79901
T 915.875.1990 | F 915.603.4290
www.sergroupusa.com
ENGINEERING FIRM NO. F-12623

SER Group, Llc

REFERENCES – BENCHMARKS

BY	REVISIONS	DATE

ENGINEER'S SEAL

STATE OF TEXAS — SERGIO CASTILLO — 90621 — LICENSED PROFESSIONAL ENGINEER — 3/3/16

SCALE
HOR: SHOWN
VER: SHOWN

DATE 03/03/2016
DESIGN BY S.C.
DRAWN BY A.L.
CHKD. BY S.C.
APPD. BY S.C.

PROJECT NAME

NORTHGATE TRANSFER CENTER

EL PASO TEXAS

CITY OF EL PASO

CAPITAL IMPROVEMENT DEPARTMENT

SHEET TITLE

WATER AND SANITARY SEWER PLAN

SHEET

C400

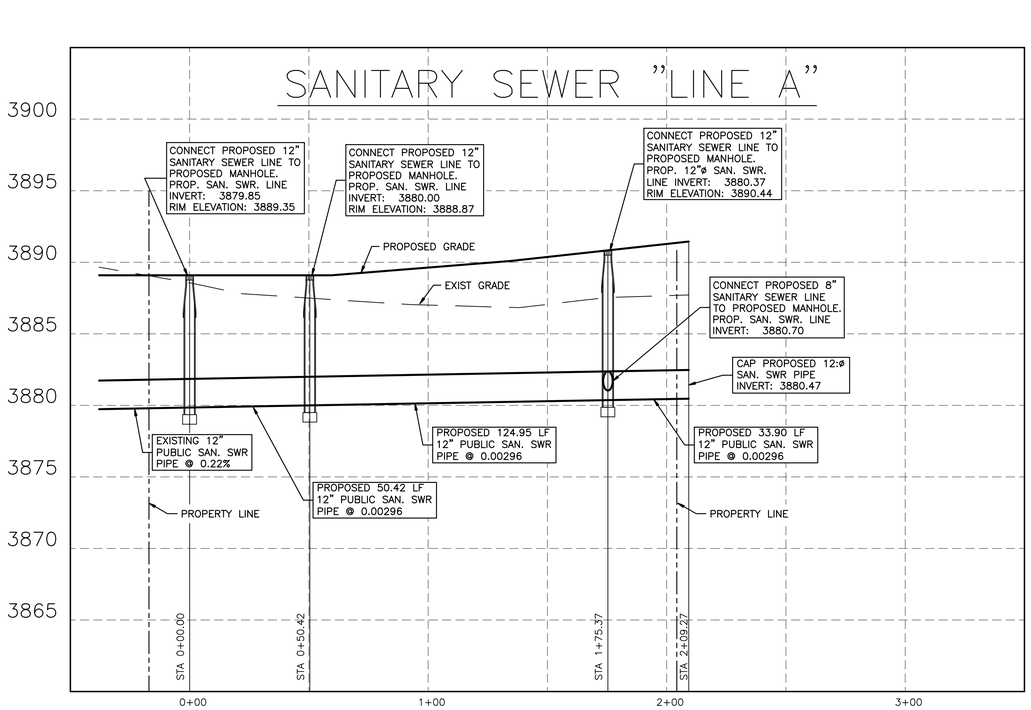

1 SANITARY SEWER PROFILE LINE "A" (MAIN STREET)

SCALE: HORIZONTAL 1"=30'-0"
VERTICAL 1"=5'-0"

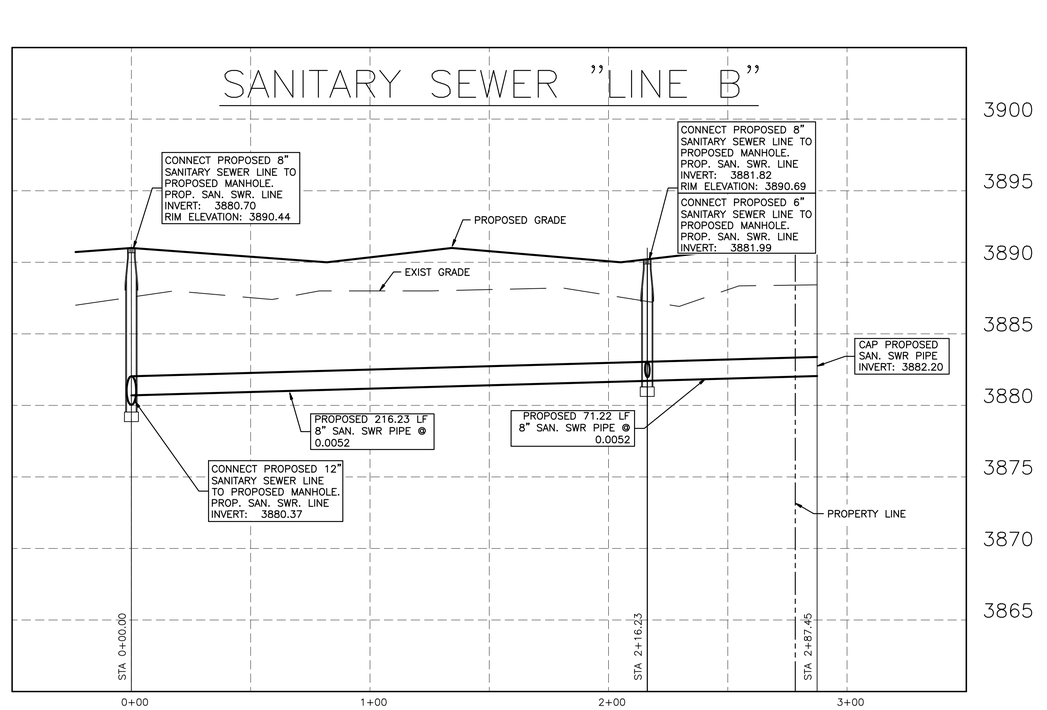

2 SANITARY SEWER PROFILE LINE "B" (DRIVE)

SCALE: HORIZONTAL 1"=30'-0"
VERTICAL 1"=5'-0"

100% CONSTRUCTION DOCUMENTS

REFERENCES -- BENCHMARKS

DATE	REVISIONS	BY

ENGINEER'S SEAL

SERGIO CASTILLO 124221 LICENSED PROFESSIONAL ENGINEER 3/3/16

SCALE
HOR: SHOWN
VER: SHOWN

DATE 03/03/2016
DESIGN BY S.C.
DRAWN BY M.A.
CHKD. BY S.C.
APPD. BY S.C.

PROJECT NAME
NORTHGATE TRANSFER CENTER
EL PASO TEXAS

CITY OF EL PASO
CAPITAL IMPROVEMENT DEPARTMENT

SHEET TITLE
SANITARY SEWER PROFILES

SHEET
C401

Sustainable Engineering Resource Group, LLC
221 N. Kansas St., Suite 700 | El Paso, TX 79901
T 915.875.1990 | F 915.603.4290
www.sergroupusa.com
ENGINEERING FIRM NO. F-12603

SER Group, Llc

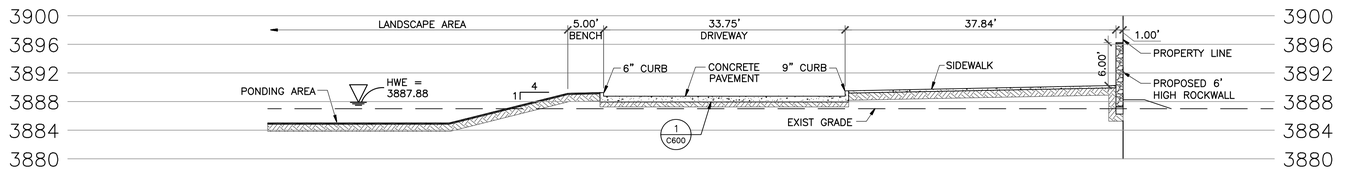

1 SECTION
SCALE: 1"=10'-0"

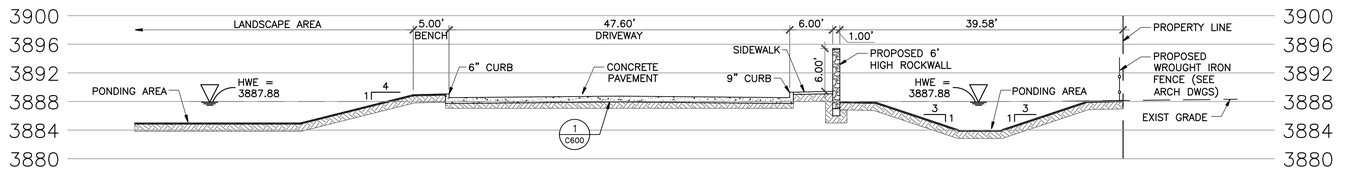

2 SECTION
SCALE: 1"=10'-0"

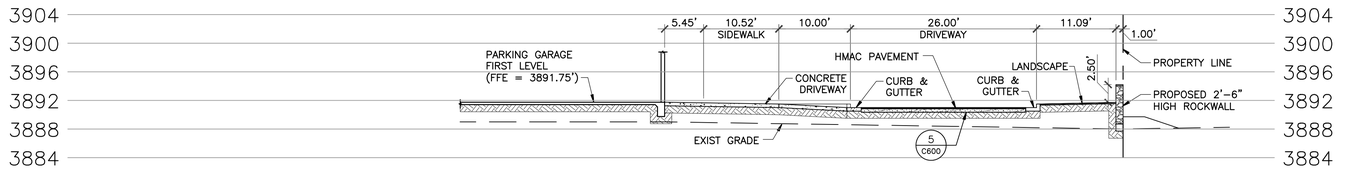

3 SECTION
SCALE: 1"=10'-0"

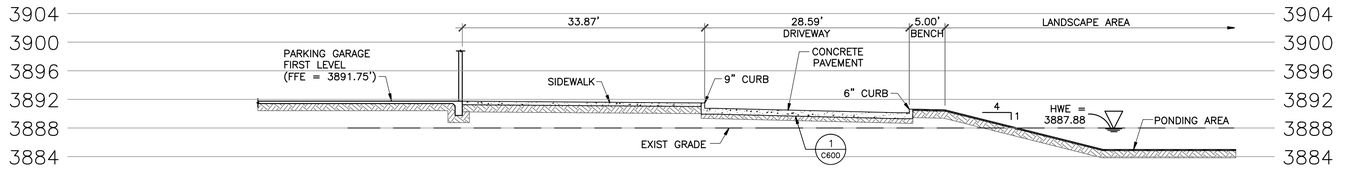

4 SECTION
SCALE: 1"=10'-0"

Sustainable Engineering Resource Group, LLC
221 N. Kansas St., Suite 700 | El Paso, TX 79901
T 915.875.1990 | F 915.603.4290
www.sergroupusa.com
ENGINEERING FIRM NO. F-13625

SER Group, Llc

100% CONSTRUCTION DOCUMENTS

REFERENCES – BENCHMARKS

BY	REVISIONS	DATE

ENGINEER'S SEAL

SCALE	
HOR:	SHOWN
VER:	SHOWN

DATE	03/03/2016
DESIGN BY	S.C.
DRAWN BY	M.A.
CHKD. BY	S.C.
APPD. BY	S.C.

PROJECT NAME

NORTHGATE TRANSFER CENTER

EL PASO TEXAS

CITY OF EL PASO

CAPITAL IMPROVEMENT DEPARTMENT

SHEET TITLE

SECTIONS

SHEET

C500

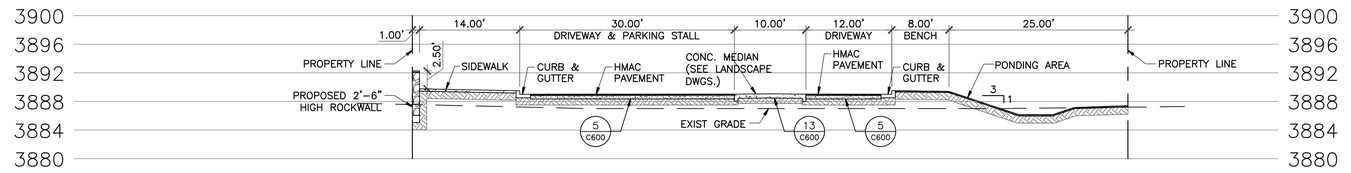

1 SECTION
SCALE: 1"=10'-0"

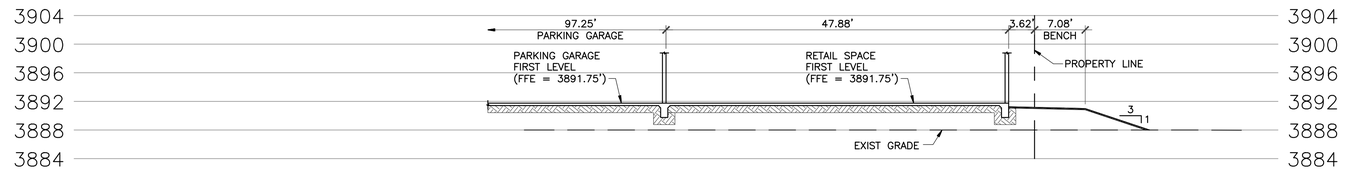

2 SECTION
SCALE: 1"=10'-0"

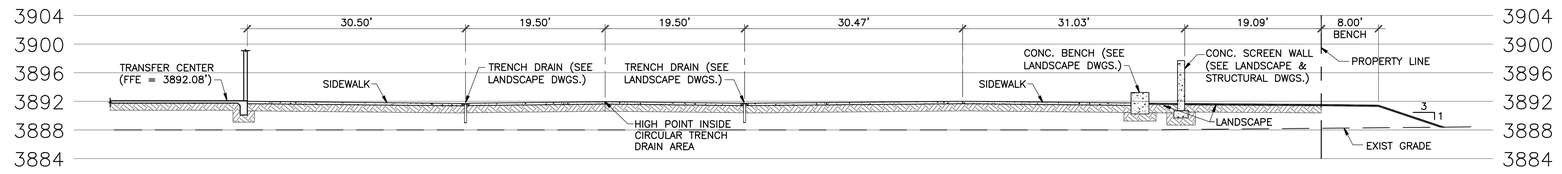

3 SECTION
SCALE: 1"=10'-0"

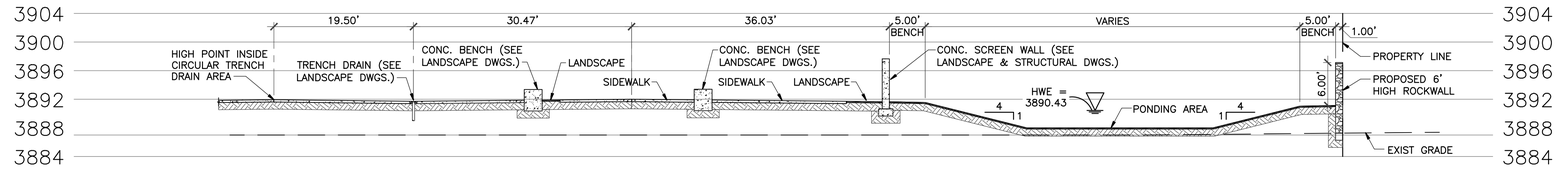

4 SECTION
SCALE: 1"=10'-0"

100% CONSTRUCTION DOCUMENTS

REFERENCES – BENCHMARKS

BY	REVISIONS	DATE

ENGINEER'S SEAL

STATE OF TEXAS · SERGIO CASTILLO · 92621 · LICENSED PROFESSIONAL ENGINEER · 3/3/16

SCALE
HOR: SHOWN
VER: SHOWN

DATE 03/03/2016
DESIGN BY S.C.
DRAWN BY M.M.
CHKD. BY S.C.
APPD. BY S.C.

PROJECT NAME

NORTHGATE TRANSFER CENTER

EL PASO TEXAS

CITY OF EL PASO

CAPITAL IMPROVEMENT DEPARTMENT

SER Group, Llc
Sustainable Engineering Resource Group, LLC
221 N. Kansas St., Suite 700 | El Paso, TX 79901
T 915.875.1990 | F 915.603.4290
www.sergroupusa.com
ENGINEERING FIRM NO. F-13603

SHEET TITLE

SECTIONS

SHEET
C501

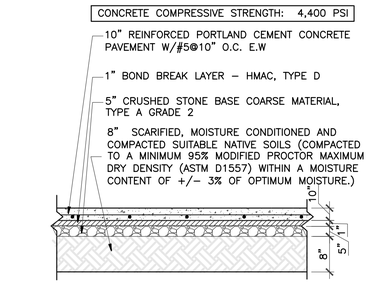

NOTE: GEOTECHNICAL REPORT RECOMMENDATIONS BY CQC PROJECT NO. AGCQC15–023 SHALL BE FOLLOWED.

1 RIGID PAVEMENT SECTION DETAIL
SCALE: NTS

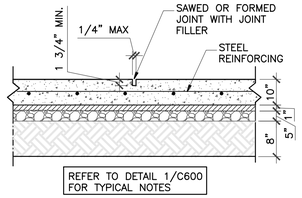

JOINT MAXIMUM SPACING 15' LONGITUDINAL, 15' TRANSVERSAL.

2 TRANSVERSE CONTROL JOINT DETAIL
SCALE: NTS

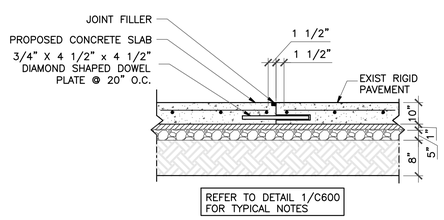

3 RIGID PAVEMENT CONSTRUCTION JOINT
SCALE: NTS

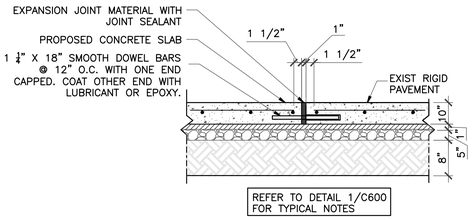

4 RIGID PAVEMENT EXPANSION JOINT
SCALE: NTS

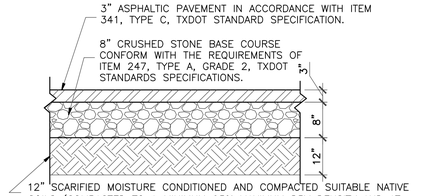

NOTE: GEOTECHNICAL REPORT RECOMMENDATIONS BY CQC PROJECT NO. AGCQC15–023 SHALL BE FOLLOWED.

5 HEAVY TRAFFIC ASPHALT PAVEMENT
SCALE: NTS

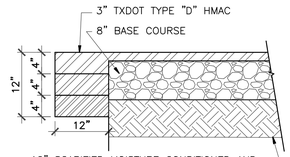

NOTES:
1. THICKENED EDGE SHALL BE CONSTRUCTED IN 4" LIFTS, EACH COURSE THOROUGHLY COMPACTED BEFORE PLACING NEXT COURSE. FINAL LIFT TO BE PLACED MONOLITHIC WITH FINAL PAVEMENT COURSE.

6 ASPHALT PAVEMENT TERMINUS
SCALE: NTS

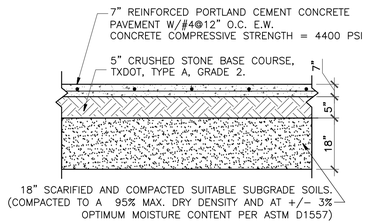

7 RIGID CONCRETE PAVEMENT @ DUMPSTER PAD
SCALE: NTS

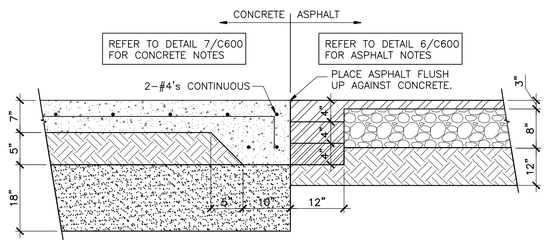

8 CONCRETE AND ASPHALT TRANSITION @ DUMPSTER PAD
SCALE: NTS

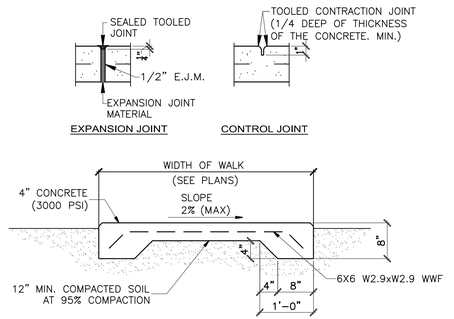

NOTE:
TOOLED CONTRACTION JOINTS @5'–0" ON CENTER AND 1/2" PREMOLDED EXPANSION JOINTS @ 20'–0" O.C. AND AT BUILDINGS, STEPS AND INTERSECTIONS.

SIDEWALK NOTES:
1. CONCRETE TO BE 3000 P.S.I. MIN.
2. DUMMY JOINT REQUIRED AT 5' O.C.
3. EXPANSION MATERIAL REQUIRED AT 20' O.C. WITH 1/2" PREMOLDED ASPHALT IMPREGNATED EXPANSION JOINT OR EQUAL.
4. SCORE CONTROL JOINTS AT 5' O.C.

9 CONC. WALK DETAIL
SCALE: 3/4"=1'–0"

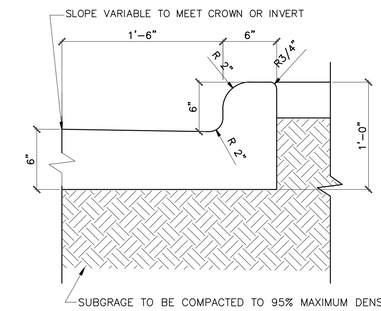

IMPORTANT NOTES FOR CURB AND GUTTER ONLY:
1. CONCRETE FOR CURBS, GUTTERS, & RETURNS SHALL BE 3000 PSI MINIMU.
2. DUMMY JOINT REQUIRED AT 10' O.C.
3. EXPANSION JOINTS REQUIRED AT CURB RETURNS, JOINTS TO BE PACKED WITH ½" PRE MOLDED ASPHALT IMPREGNATED EXPANSION MATERIAL OR EQUAL.

10 6" CONCRETE CURB AND GUTTER DETAIL
SCALE: 1–1/2"=1'–0"

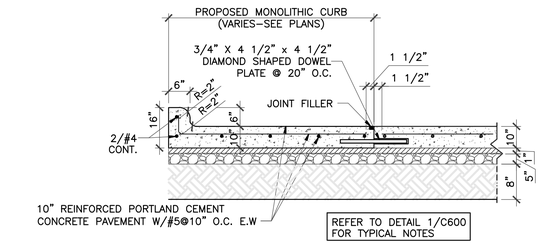

11A 6" MONOLITHIC CURB AND CONSTRUCTION JOINT DETAIL @ BUS LANE
SCALE: NTS

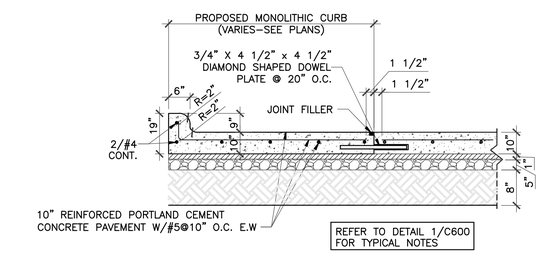

11B 9" MONOLITHIC CURB AND CONSTRUCTION JOINT DETAIL @ BUS LANE
SCALE: NTS

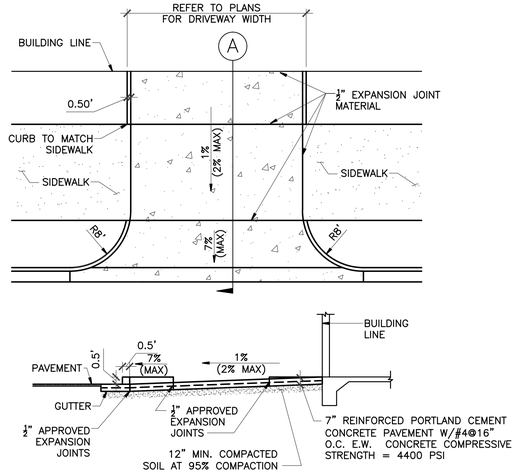

SECTION A-A

12 DRIVEWAY PLAN AND SECTION
SCALE: NTS

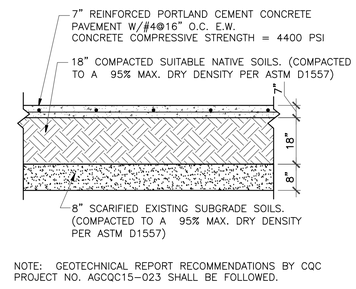

NOTE: GEOTECHNICAL REPORT RECOMMENDATIONS BY CQC PROJECT NO. AGCQC15–023 SHALL BE FOLLOWED.

13 HEAVY DUTY CONCRETE PAVEMENT @ DESIGNATED PLAZA AREAS AND DRIVEWAYS
SCALE: NTS

Sustainable Engineering Resource Group, LLC
221 N. Kansas St., Suite 700 | El Paso, TX 79901
T 915.875.1990 | F 915.603.4290
www.segroupusa.com
ENGINEERING FIRM NO. F-12605

100% CONSTRUCTION DOCUMENTS

REFERENCES – BENCHMARKS

REVISIONS

BY	DATE

ENGINEER'S SEAL

SCALE
HOR: SHOWN
VER: SHOWN

DATE 03/03/2016
DESIGN BY S.C.
DRAWN BY M.M.
CHKD. BY S.C.
APPD. BY S.C.

PROJECT NAME
NORTHGATE TRANSFER CENTER
EL PASO TEXAS

CITY OF EL PASO
CAPITAL IMPROVEMENT DEPARTMENT

SER Group, Llc

SHEET TITLE
SITE DETAILS

SHEET
C600

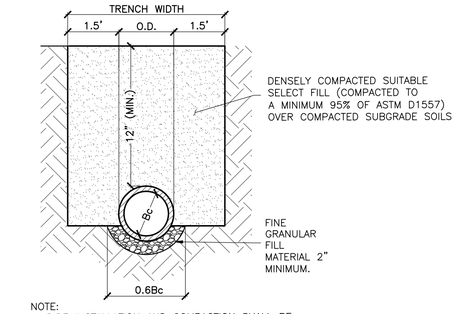

NOTE:
1. PIPE INSTALLATION AND COMPACTION SHALL BE PERFORMED IN ACCORDANCE WITH PIPE MANUFACTURER.

1 TYPICAL UNPAVED TRENCH DETAIL FOR STORMWATER RCP

SCALE: NTS

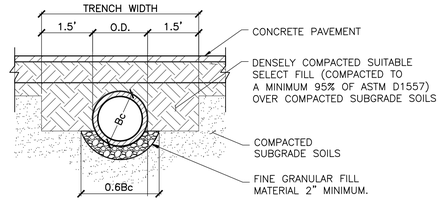

NOTE:
1. PIPE INSTALLATION AND COMPACTION SHALL BE PERFORMED IN ACCORDANCE WITH PIPE MANUFACTURER.

2 TYPICAL PAVED TRENCH DETAIL FOR STORMWATER RCP

SCALE: NTS

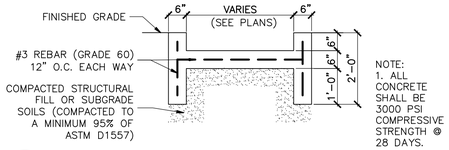

3 CONCRETE FLUME

SCALE: 1/2"=1'-0"

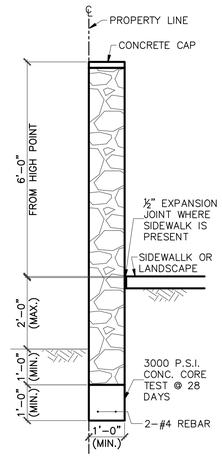

NOTES

1. STONE FOR ROCKWALL SHALL BE AS NEARLY UNIFORM IN SECTIONS AS IS PRACTICABLE. THE STONE SHALL BE DENSE AND RESISTANT TO AIR AND WATER.
2. MORTAR SHALL BE TYPE "S" 1800 P.S.I. AS PER ASTM C270.
3. MASONRY WALLS OVER SIX (6) FEET IN HEIGHT AND THOSE USED FOR EARTH RETENTION OVER TWO (2) FEET MUST BE DESIGNED AS STRUCTURAL WALLS.
4. WALLS ADJACENT TO PONDING AREAS OR DRAINAGE DITCHES MAY BE CONSTRUCTED OF BRICK OR CINDER BLOCK AND SHALL NOT BE LESS THAN SIX (6) FEET HIGH.
5. ROCKWALL MORTAR JOINTS SHALL NOT EXCEED TWO (2) INCHES.
6. PROVIDE ONE (1) INCH EXPANSION JOINTS AT EVERY 100 FEET.
7. ALL STONE SHALL BE THOROUGHLY SOAKED BEFORE BEING PLACED.
8. NO RIVER ROCK SHALL BE ALLOWED FOR ROCKWALLS.

4 TYPICAL 6' HIGH ROCKWALL DETAIL

SCALE: 1/2"=1'-0"

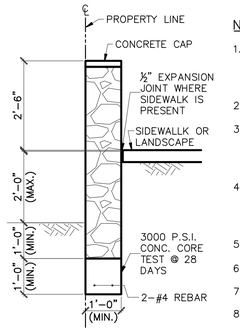

NOTES

1. STONE FOR ROCKWALL SHALL BE AS NEARLY UNIFORM IN SECTIONS AS IS PRACTICABLE. THE STONE SHALL BE DENSE AND RESISTANT TO AIR AND WATER.
2. MORTAR SHALL BE TYPE "S" 1800 P.S.I. AS PER ASTM C270.
3. MASONRY WALLS OVER SIX (6) FEET IN HEIGHT AND THOSE USED FOR EARTH RETENTION OVER TWO (2) FEET MUST BE DESIGNED AS STRUCTURAL WALLS.
4. WALLS ADJACENT TO PONDING AREAS OR DRAINAGE DITCHES MAY BE CONSTRUCTED OF BRICK OR CINDER BLOCK AND SHALL NOT BE LESS THAN SIX (6) FEET HIGH.
5. ROCKWALL MORTAR JOINTS SHALL NOT EXCEED TWO (2) INCHES.
6. PROVIDE ONE (1) INCH EXPANSION JOINTS AT EVERY 100 FEET.
7. ALL STONE SHALL BE THOROUGHLY SOAKED BEFORE BEING PLACED.
8. NO RIVER ROCK SHALL BE ALLOWED FOR ROCKWALLS.

5 TYPICAL 2'-6" HIGH ROCKWALL DETAIL

SCALE: 1/2"=1'-0"

IMPORTANT NOTES:
1. STONE SHALL BE 6 TO 8 INCH DIAMETER CRUSHED ROCK OR ACCETABLE CRUSHED PORTLAND CEMENT CONCRETE.
2. LENGTH AND WIDTH IS SHOWN ON PLAN.
3. THICKNESS SHALL NOT BE LESS THAN 6 INCHES.

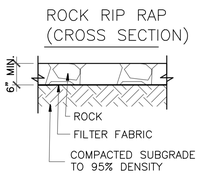

6 TYP. ROCK RIP-RAP DETAIL

SCALE: NTS

PIPE SIZE	X (LENGTH IN FEET) 1 3	X (LENGTH IN FEET) 1 4
12"	3'	4'
24"	6'	8'

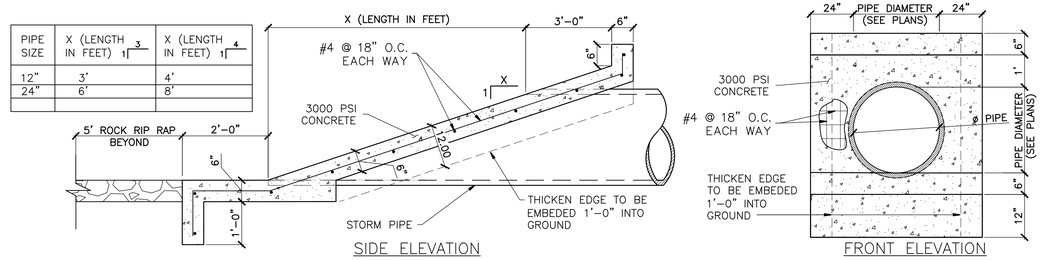

7 CULVERT HEADWALL AT RETENTION POND

SCALE: NTS

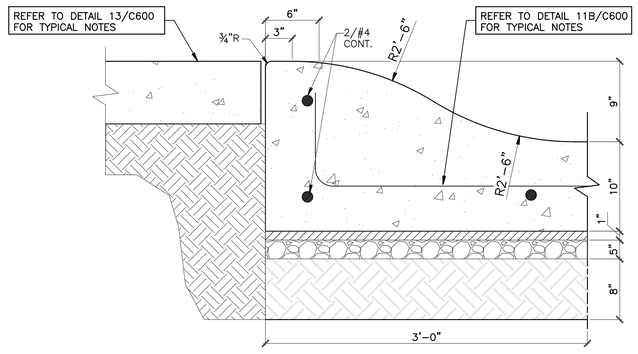

I. EXPANSION JOINTS REQUIRED AT CURB RETURNS, JOINTS TO BE PACKED WITH ½" PRE MOLDED ASPHALT IMPREGNATED EXPANSION MATERIAL OR EQUAL.

8 9" ROLLED CURB DETAIL

SCALE: 1-1/2"=1'-0"

REFERENCES – BENCHMARKS

BY	REVISIONS	DATE

ENGINEER'S SEAL

SCALE
HOR: SHOWN
VER: SHOWN

DATE 03/03/2016
DESIGN BY S.C.
DRAWN BY A.L.
CHKD. BY S.C.
APPD. BY S.C.

PROJECT NAME

NORTHGATE TRANSFER CENTER

EL PASO TEXAS

Sustainable Engineering Resource Group, LLC
225 N. Kansas St., Suite 700 | El Paso, TX 79901
T 915.875.1590 | F 915.603.4290
www.sergroupusa.com
ENGINEERING FIRM NO. F-12628

SER Group, Llc

CITY OF EL PASO

CAPITAL IMPROVEMENT DEPARTMENT

SHEET TITLE

SITE DETAILS

SHEET

C601

100% CONSTRUCTION DOCUMENTS

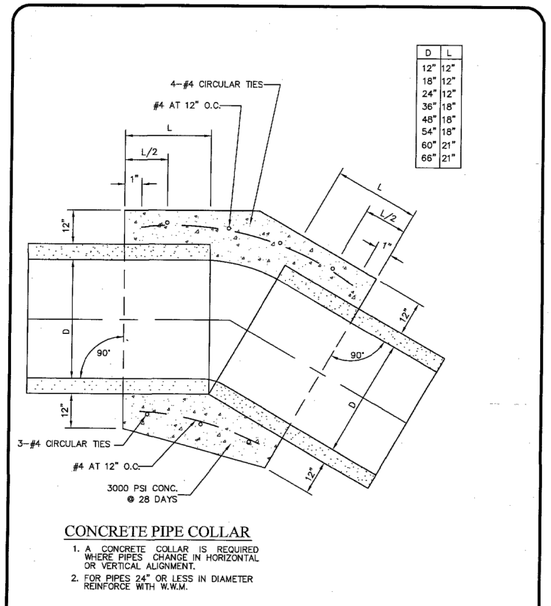

CONCRETE PIPE COLLAR

1. A CONCRETE COLLAR IS REQUIRED WHERE PIPES CHANGE IN HORIZONTAL OR VERTICAL ALIGNMENT.
2. FOR PIPES 24" OR LESS IN DIAMETER REINFORCE WITH W.W.M.

TITLE 19 - SUBDIVISION ORDINANCE
ENGINEERING DEPARTMENT
DESIGN STANDARDS FOR CONSTRUCTION

CONCRETE PIPE COLLAR
2-25

Approved By R. A. SHUBERT Date JUNE 03, 2008 | Checked By H. M. E. Drawn By QEC / J. R.

1 CONCRETE PIPE COLLAR
SCALE: NTS

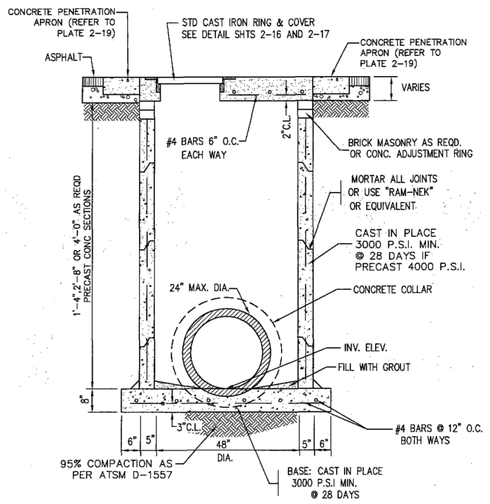

48" DIAMETER PRECAST MANHOLE SECTIONS

TITLE 19 - SUBDIVISION ORDINANCE
ENGINEERING DEPARTMENT
DESIGN STANDARDS FOR CONSTRUCTION

48" DIAMTER PRECAST MANHOLES
2-21

Approved By R. A. SHUBERT Date JUNE 03, 2008 | Checked By H. M. E. Drawn By QEC / J. R.

2 48" DIA. PRECAST MANHOLE SECTION
SCALE: NTS

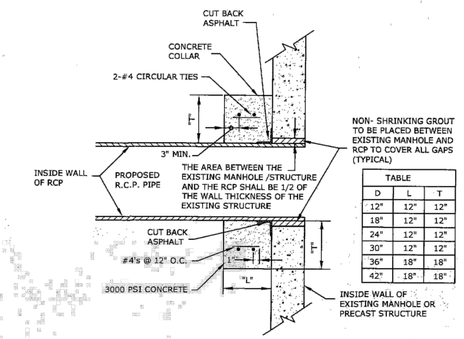

TABLE

D	L	T
12"	12"	12"
18"	12"	12"
24"	12"	12"
30"	12"	12"
36"	18"	18"
42"	18"	18"

CONNECTION AT PRECAST JUNCTION BOXES OR EXISTING MANHOLES

SCALE: N.T.S.

TITLE 19 - SUBDIVISION ORDINANCE
ENGINEERING DEPARTMENT
DESIGN STANDARDS FOR CONSTRUCTION

CONNECTION AT PRECAST JUNCTION BOXES OR EXISTING MANHOLES
2-26

Approved By R. A. SHUBERT Date JUNE 03, 2008 | Checked By H. M. E. Drawn By QEC / J. R.

3 CONNECTION AT PRECAST JUNCTION BOXES
SCALE: NTS

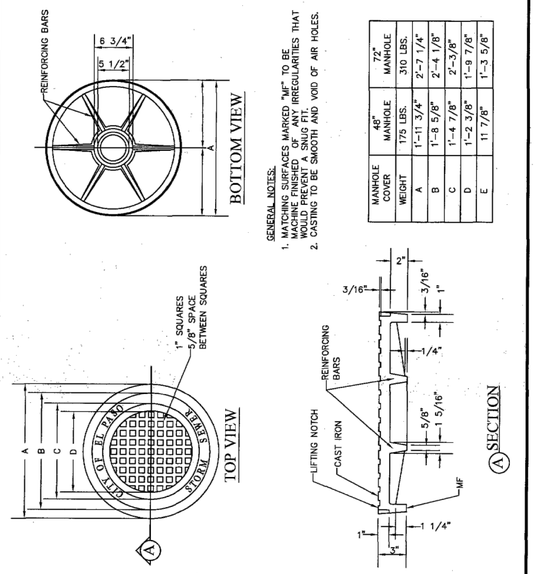

TITLE 19 - SUBDIVISION ORDINANCE
ENGINEERING DEPARTMENT
DESIGN STANDARDS FOR CONSTRUCTION

MANHOLE COVER
2-17

Approved By R. A. SHUBERT Date JUNE 03, 2008 | Checked By H. M. E. Drawn By QEC / J. R.

4 MANHOLE COVER
SCALE: NTS

STANDARD MANHOLE SPECIFICATIONS

1. THE PRECAST MANHOLE RISER AND CONICAL SECTIONS SHALL CONFORM TO ASTM SPECIFICATIONS C-478.
2. THE PRECAST CONCRETE SHALL ATTAIN A MINIMUM ALLOWABLE COMPRESSIVE STRENGTH OF 4000 PSI @ 28 DAYS.
3. THE CONCRETE BASE SHALL ATTAIN A MINIMUM ALLOWABLE COMPRESSIVE STRENGTH OF 3000 PSI @ 28 DAYS.
4. MASONRY SHALL BE COMMON BRICK WITH ASTM TYPE 'S' MORTAR ATTAINING A MINIMUM COMPRESSIVE STRENGTH OF 1800 P.S.I. AT 28 DAYS.
5. INCLUDE DETAIL FOR CONNECTION AT PRECAST JUNCTION BOXES OR EXISTING MANHOLES (IF APPLICABLE) , REFER TO PLATE 2-26.
6. MANHOLE COVER SHALL BE SET FLUSH WITH FINISHED PAVEMENT.
7. SUBGRADE FOR MANHOLES SHALL BE COMPACTED TO A MINIMUM OF 95% IN ACCORDANCE WITH ASTM D1557.

TITLE 19 - SUBDIVISION ORDINANCE
ENGINEERING DEPARTMENT
DESIGN STANDARDS FOR CONSTRUCTION

STANDARD MANHOLE SPECIFICATIONS
2-28

Approved By R. A. SHUBERT Date JUNE 03, 2008 | Checked By H. M. E. Drawn By QEC / J. R.

5 STANDARD MANHOLE SPECIFICATIONS
SCALE: NTS

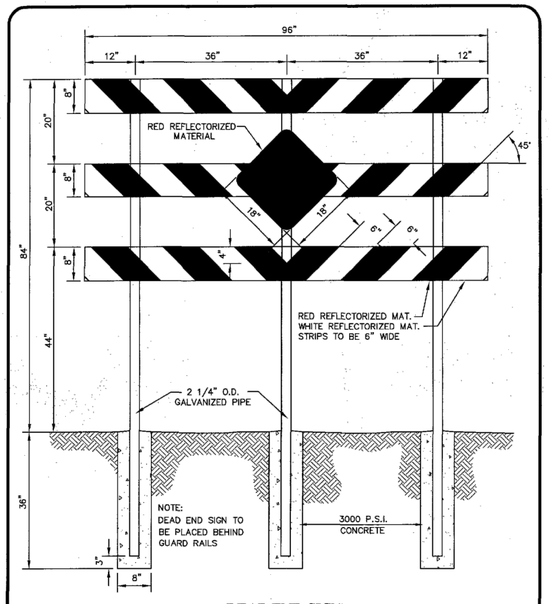

DEAD END SIGN

TITLE 19 - SUBDIVISION ORDINANCE
ENGINEERING DEPARTMENT
DESIGN STANDARDS FOR CONSTRUCTION

DEAD END SIGN
7-17A

Approved By R. A. SHUBERT Date JUNE 03, 2008 | Checked By H. M. E. Drawn By QEC / J. R.

6 DEAD END SIGN
SCALE: NTS

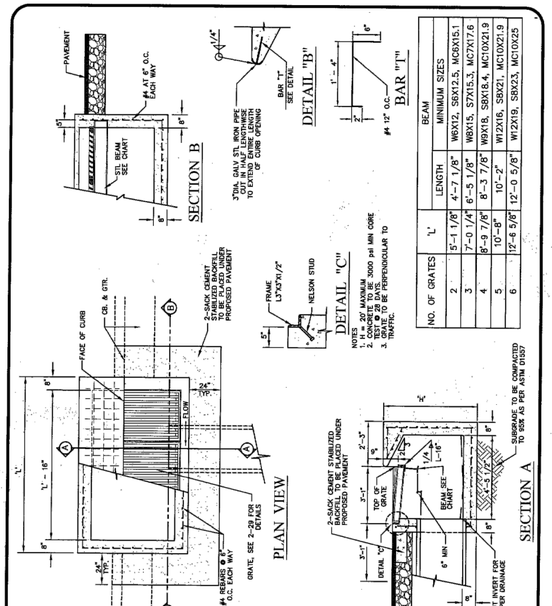

TITLE 19 - SUBDIVISION ORDINANCE
ENGINEERING DEPARTMENT
DESIGN STANDARDS FOR CONSTRUCTION

DROP INLET TYPE I
2-30

Approved By R. A. SHUBERT Date JUNE 03, 2008 | Checked By H. M. E. Drawn By QEC / J. R.

7 DROP INLET TYPE I
SCALE: NTS

100% CONSTRUCTION DOCUMENTS

SER Group, LLC
Sustainable Engineering Resource Group, LLC
221 N. Kansas St., Suite 700 | El Paso, TX. 79901
T 915.875.1990 | F 915.603.4290
www.sergroupusa.com
ENGINEERING FIRM NO. F-12621

REFERENCES – BENCHMARKS

BY	REVISIONS	DATE

ENGINEER'S SEAL
STATE OF TEXAS
SERGIO CASTILLO
103481
LICENSED PROFESSIONAL ENGINEER
3/3/16

SCALE
HOR: SHOWN
VER: SHOWN

DATE 03/03/2016
DESIGN BY S.C.
DRAWN BY S.C.
CHKD. BY S.C.
APPD. BY S.C.

PROJECT NAME
NORTHGATE TRANSFER CENTER
EL PASO TEXAS

CITY OF EL PASO
CAPITAL IMPROVEMENT DEPARTMENT

SHEET TITLE
SITE DETAILS

SHEET
C602

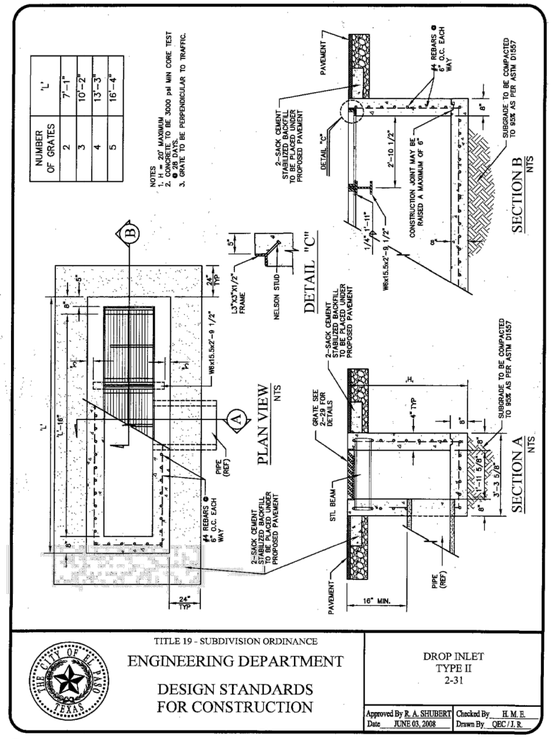

1 DROP INLET TYPE II

SCALE: NTS

TITLE 19 - SUBDIVISION ORDINANCE
ENGINEERING DEPARTMENT
DESIGN STANDARDS FOR CONSTRUCTION

DROP INLET TYPE II
2-31

Approved By R. A. SHUBERT Checked By H. M. E.
Date JUNE 03, 2008 Drawn By QBC / J. R.

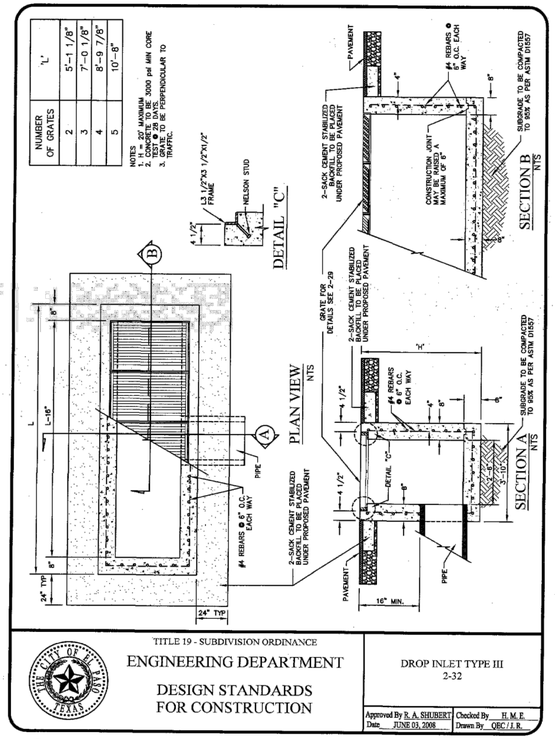

2 DROP INLET TYPE III

SCALE: NTS

TITLE 19 - SUBDIVISION ORDINANCE
ENGINEERING DEPARTMENT
DESIGN STANDARDS FOR CONSTRUCTION

DROP INLET TYPE III
2-32

Approved By R. A. SHUBERT Checked By H. M. E.
Date JUNE 03, 2008 Drawn By QBC / J. R.

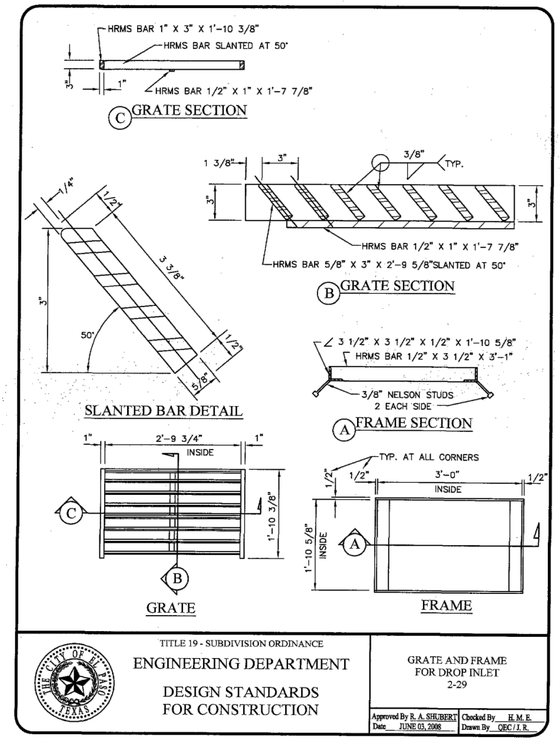

3 GRATE AND FRAME FOR DROP INLET

SCALE: NTS

TITLE 19 - SUBDIVISION ORDINANCE
ENGINEERING DEPARTMENT
DESIGN STANDARDS FOR CONSTRUCTION

GRATE AND FRAME FOR DROP INLET
2-29

Approved By R. A. SHUBERT Checked By H. M. E.
Date JUNE 03, 2008 Drawn By QBC / J. R.

100% CONSTRUCTION DOCUMENTS

SER Group, Llc
Sustainable Engineering Resource Group, LLC
221 N. Kansas St., Suite 700 | El Paso, TX. 79901
T 915.875.1990 | F 915.603.4290
www.sergroupusa.com
ENGINEERING FIRM NO. F-13603

REFERENCES – BENCHMARKS

BY	DATE	REVISIONS

ENGINEER'S SEAL

SCALE
HOR: SHOWN
VER: SHOWN

DATE 03/03/2016
DESIGN BY S.C.
DRAWN BY J.L.
CHKD. BY S.C.
APPD. BY S.C.

PROJECT NAME

NORTHGATE TRANSFER CENTER

EL PASO TEXAS

CITY OF EL PASO

CAPITAL IMPROVEMENT DEPARTMENT

SHEET TITLE

SITE DETAILS

SHEET

C603

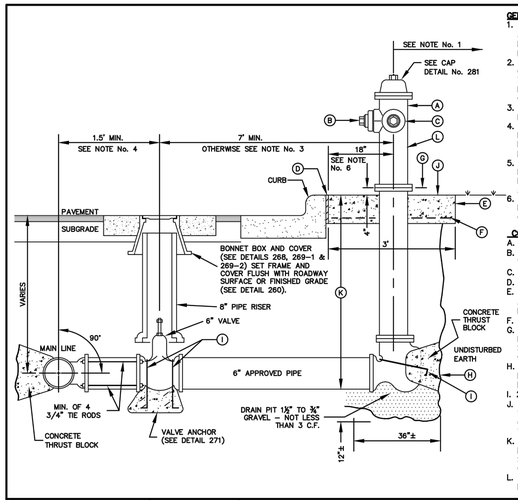

GENERAL NOTES:

1. NO OBSTRUCTIONS WILL BE PERMITTED WITHIN 5 FT. IN ALL DIRECTIONS OF FIRE HYDRANT (PER EL PASO MUNICIPAL CODE, TITLE 12). FIRE HYDRANT SHALL NOT BE PLACED IN WHEEL CHAIR RAMP OR DRIVEWAY.
2. FIRE HYDRANT SHALL BE LOCATED AT THE BEGINNING OF CURB RETURN OR AT THE PROPERTY LINE COMMON TO ADJOINING LOTS, UNLESS OTHERWISE SHOWN ON PLANS. REFER TO DETAIL No. 282 FOR SPECIAL CASES.
3. WHERE DISTANCE IS LESS THAN 7', HYDRANT SHALL BE INSTALLED IN ACCORDANCE WITH DETAIL No. 282.
4. VALVE MAY BE CONNECTED TO TEE AT MAIN LINE. USE FLANGED MECHANICAL JOINT ENDS. WHERE SPOOL IS REQUIRED BETWEEN TEE AND VALVE, USE FLANGED MECHANICAL ENDS WITH ¾" DIAMETER TIE RODS.
5. COMPLY WITH REQUIREMENTS OF AWWA C-502, DRY BARREL FIRE HYDRANTS AND AWWA C-550, PROTECTIVE EPOXY INTERIOR COATINGS FOR VALVES AND HYDRANTS.
6. WHEN INSTALLATION IS WITHIN TxDOT RIGHT OF WAY, HYDRANT SHALL NOT BE PLACED IN SIDEWALK AREA OR ANY CLOSER THAN 5' FROM BACK OF CURB.

CONSTRUCTION KEY NOTES:

A. FIRE HYDRANT PER SPEC'S.
B. PUMPER NOZZLE 4" TO BE FACING THE TRAVELED WAY, UNLESS OTHERWISE NOTED IN THE PLANS.
C. HOSE NOZZLE 2½".
D. ½" PREMOLDED EXPANSION JOINT WITH 1" TOP FILLER.
E. 3'x3'x6" CONC. SQ. PAD, TO BE CONSTRUCTED AROUND FIRE HYDRANT'S CENTER LINE WHEN NOT LOCATED WITHIN SIDEWALK OR CONC. AREA.
F. #10; 6/6 WWF.
G. CONTROLLED ELEVATION LINE, LEVEL IN ALL DIRECTIONS. CONTRACTOR SHALL BE RESPONSIBLE FOR SETTING TOP FLANGE OF THE HYDRANT TO CONTROLLED ELEVATION.
H. CONC. THRUST BLOCK, APPROX. 2'x2'x3' TO BE POURED AGAINST UNDISTURBED EARTH, F.H. WEEP HOLE MUST BE UNOBSTRUCTED.
I. 2"x1/4" STEEL ANCHOR PINS.
J. TOP OF SLAB SHALL BE AT CURB LEVEL 4" BELOW THE BREAK LINE OF THE HYDRANT. UNDER SPECIAL CONDITIONS THE ENGINEER MAY ALLOW VARIATIONS TO THIS CONSTRUCTION.
K. MAXIMUM OF ONE (1) SPOOL EXTENSION ALLOWED TO MAINTAIN THE CONTROLLED ELEVATION LINE TO TOP OF SLAB. ADDITIONAL ADJUSTMENT MUST ME MADE WITH OFFSETS & FITTINGS AS NEEDED.
L. REQUIRED – DAVIDSON ANTI TERRORISM CORROSION RESISTANT VALVE KIT (DATV).

STANDARD DETAIL	DATE: 2/1993 REV: 10/1/2013	FIRE HYDRANT INSTALLATION N.T.S.	EL PASO WATER UTILITIES PUBLIC SERVICE BOARD	DETAIL No. 280-1

1 FIRE HYDRANT INSTALLATION
SCALE: NTS

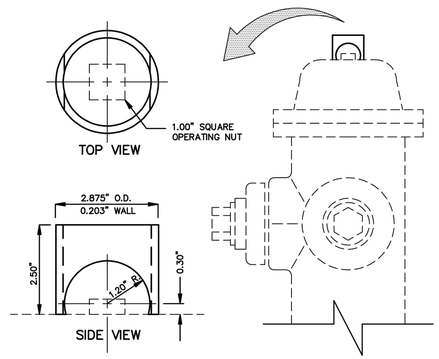

GENERAL NOTES:

1. STEEL CAPS TO BE MACHINED FROM STEEL PIPE:
   NOMINAL SIZE = 2 1/2" DIA.
   OUTSIDE DIA. = 2.875"
   WALL THICKNESS = 0.203
   LBS/FT. = 5.79
2. CAPS ARE TO BE TACK WELDED OR BRAZED ON FIRE HYDRANT BONNET OR WEATHER CAP.
3. THE CAPS OVER THE OPERATING NUT WILL PREVENT ACCESS TO THE UNAUTHORIZED USE OF HYDRANT WATER.

STANDARD DETAIL	FEB. 1993 REV: FEB. 1994	FIRE HYDRANT CAP N.T.S.	EL PASO WATER UTILITIES PUBLIC SERVICE BOARD	DETAIL No. 281

2 FIRE HYDRANT CAP
SCALE: NTS

SER Group, Llc
Sustainable Engineering Resource Group, LLC
221 N. Kansas St., Suite 700 | El Paso, TX 79901
T 915.875.1990 | F 915.603.4290
www.sergroupusa.com
ENGINEERING FIRM NO. F-13625

100% CONSTRUCTION DOCUMENTS

REFERENCES – BENCHMARKS

BY	REVISIONS	DATE

ENGINEER'S SEAL
STATE OF TEXAS
SERGIO CASTILLO
103521
LICENSED PROFESSIONAL ENGINEER
3/3/16

SCALE
HOR: SHOWN
VER: SHOWN

DATE 03/03/2016
DESIGN BY S.C.
DRAWN BY A.L.
CHKD. BY S.C.
APPD. BY S.C.

PROJECT NAME
NORTHGATE TRANSFER CENTER
EL PASO TEXAS

CITY OF EL PASO
CAPITAL IMPROVEMENT DEPARTMENT

SHEET TITLE
SITE DETAILS (WATER AND SANITARY SEWER)

SHEET
C605

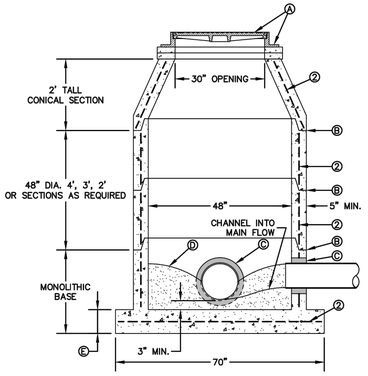

SECTION

GENERAL NOTES:

1. MANHOLE TYPE "A" SHALL BE USED FOR LINES 21" AND SMALLER.
2. PRE-CAST MANHOLE SECTIONS SHALL BE OF REINFORCED CONCRETE CONFORMING TO ASTM C-478 AND SHALL MEET HS-20 LOADING. PROVIDE REINFORCEMENT WITHIN 3" ⌀ OPENINGS OR KNOCKOUTS, OPENINGS (UP TO 8") MADE IN FIELD SHALL BE CORE DRILLED.
3. CEMENT SHALL BE TYPE I-II, PER ASTM C-150, AND MUST CONTAIN A MINIMUM OF 4% FLY ASH OF THE TOTAL MANHOLE WEIGHT.
4. THE BASE & RISER SHALL BE INTEGRALLY CAST. CONCRETE SHALL BE MIN. 28 DAY COMPRESSIVE STRENGTH 4000psi.
5. MANUFACTURER TO PROVIDE LIFTERS OF ADEQUATE SIZE AS NEEDED.
6. THE SUBGRADE UNDER THE BASE SHALL BE COMPACTED TO 95% DENSITY IN ACCORDANCE WITH ASTM D-1557.
7. MANHOLES BELOW GROUNDWATER TO BE EXTERNALLY AND INTERNALLY COATED WITH BITUMINOUS COATING.

CONSTRUCTION KEY NOTES:

A. MANHOLE RING AND COVER (SEE DETAILS 377 & 378). SET FRAME AND COVER FLUSH WITH ROADWAY SURFACE OR FINISHED GRADE (SEE DETAIL 185).
B. ALL JOINTS TO BE TONGUE, GROOVE AND SEALED WITH RAM-NEK OR APPROVED EQUAL.
C. PIPE OPENINGS/KNOCKOUTS AS REQUIRED TO FIT PIPE SIZE AND SHALL HAVE FLEXIBLE PIPE TO MANHOLE CONNECTORS (COMPRESSION TYPE ASTM-923), "KOR-N-SEAL" OR APPROVED EQUAL.
D. GROUT AS REQUIRED.
E. CONCRETE BASE SHALL BE 8" FOR MH's UP TO 12' DEEP AND 12" FOR DEPTHS GREATER THAN 12'.

STANDARD DETAIL	DATE: 11/1992 REV: 2/8/2013	MANHOLE TYPE "A" N.T.S.	EL PASO WATER UTILITIES PUBLIC SERVICE BOARD	DETAIL No. 370-1

1 MANHOLE TYPE "A"

SCALE: NTS

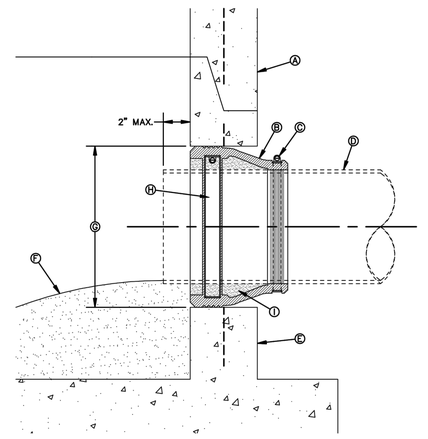

SECTION

GENERAL NOTES:

1. MANHOLE CONNECTOR SHALL BE KOR-N-SEAL OR EQUAL MEETING THE REQUIREMENTS OF ASTM C-923. CONNECTOR SHALL BE FURNISHED BY CONTRACTOR.

CONSTRUCTION KEY NOTES:

A. PRECAST MANHOLE BARREL.
B. FLEXIBLE CONNECTOR.
C. PIPE CLAMP SS 316.
D. APPROVED PIPE.
E. PRECAST MANHOLE BASE.
F. GROUT AS REQUIRED TO FORM SMOOTH CHANNEL TO MANHOLE INVERT.
G. PIPE OPENINGS/KNOCKOUTS AS REQUIRED TO FIT PIPE SIZE.
H. EXPANSION BAND SS 316.
I. FILL SPACE WITH GROUT.

STANDARD DETAIL	DATE: 11/1992 REV: 8/13/2009	PIPE CONNECTION TO MANHOLE N.T.S.	EL PASO WATER UTILITIES PUBLIC SERVICE BOARD	DETAIL No. 376

2 PIPE CONNECTION TO MANHOLE

SCALE: NTS

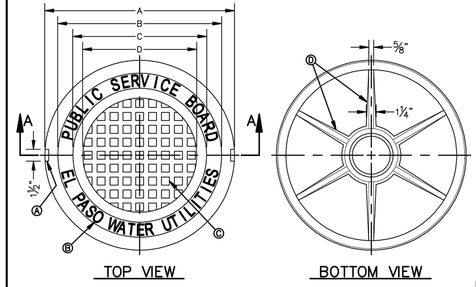

GENERAL NOTES:

1. MATCHING SURFACES MARKED "MF" TO BE FINISHED OF ANY IRREGULARITIES THAT WOULD PREVENT A SNUG FIT.
2. CASTING TO BE SMOOTH & VOID OF AIR HOLES.
3. CASTING MUST MEET REQUIREMENTS OF AASHTO M306-07.
4. AS-CAST DIMENSIONS MAY VARY 1/16"±/ PER FOOT (AASHTO M306-07).
5. WEIGHT MAY VARY 5%± (AASHTO M306-07).

CONSTRUCTION KEY NOTES:

A. LIFTING NOTCH.
B. 3/16" RAISED LETTERING.
C. 1" SQUARES (3/16" TALL) WITH 5/8" SPACE BETWEEN.
D. REINFORCING RIBS.
E. SLOT.

MANHOLE COVER	MANHOLE – ALL TYPES	*MANHOLE TYPE A, A1, A2 & C
A	31 3/8"	23 7/8"
B	28 1/8"	20 5/8"
C	24 3/8"	16 7/8"
D	21 7/8"	14 3/8"
WEIGHT	200 lbs.	165 lbs.

*OBSOLETE –DO NOT USE (FOR REFERENCE ONLY)

STANDARD DETAIL	DATE: 11/1992 REV: 2/21/2011	SEWER MANHOLE COVER N.T.S.	EL PASO WATER UTILITIES PUBLIC SERVICE BOARD	DETAIL No. 378

3 SEWER MANHOLE COVER

SCALE: NTS

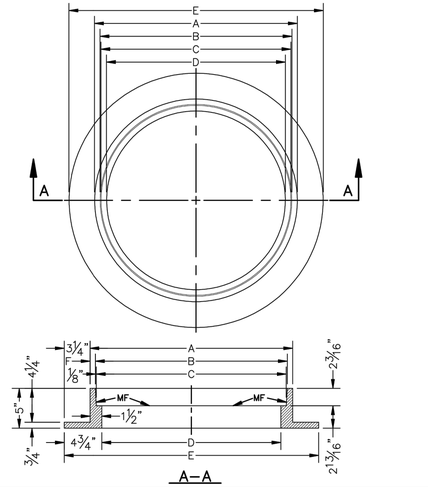

GENERAL NOTES:

1. MATCHING SURFACES MARKED "MF" TO BE FINISHED OF ANY IRREGULARITIES THAT WOULD PREVENT A SNUG FIT.
2. CASTING TO BE SMOOTH & VOID OF AIR HOLES.
3. CASTING MUST MEET REQUIREMENTS OF AASHTO M306-07.
4. AS-CAST DIMENSIONS MAY VARY 1/16"±/ PER FOOT (AASHTO M306-07).
5. WEIGHT MAY VARY 5%± (AASHTO M306-07).

MANHOLE RING	MANHOLE – ALL TYPES	*MANHOLE TYPE A, A1, A2 & C
A	33"	25½"
B	31¾"	24⅛"
C	31½"	23⅞"
D	30"	22½"
E	39½"	32"
F	5/8"	1/16"
WEIGHT	205 lbs.	170 lbs.

*OBSOLETE –DO NOT USE (FOR REFERENCE ONLY)

STANDARD DETAIL	DATE: 11/1992 REV: 2/21/2011	SEWER MANHOLE RING N.T.S.	EL PASO WATER UTILITIES PUBLIC SERVICE BOARD	DETAIL No. 377

4 SEWER MANHOLE RING

SCALE: NTS

100% CONSTRUCTION DOCUMENTS

REFERENCES – BENCHMARKS

BY	REVISIONS	DATE

ENGINEER'S SEAL

SCALE
HOR: SHOWN
VER: SHOWN

DATE 03/03/2016
DESIGN BY S.C.
DRAWN BY J.L.
CHKD. BY S.C.
APPD. BY S.C.

PROJECT NAME
NORTHGATE TRANSFER CENTER
EL PASO TEXAS

CITY OF EL PASO
CAPITAL IMPROVEMENT DEPARTMENT

SHEET TITLE
SITE DETAILS (WATER AND SANITARY SEWER)

SHEET
C604

SER Group, LLC
Sustainable Engineering Resource Group, LLC
221 N. Kansas St., Suite 700 El Paso, TX. 79901
T 915.875.1990 | F 915.603.4290
www.sergrouptexas.com
ENGINEERING FIRM NO. F-12625

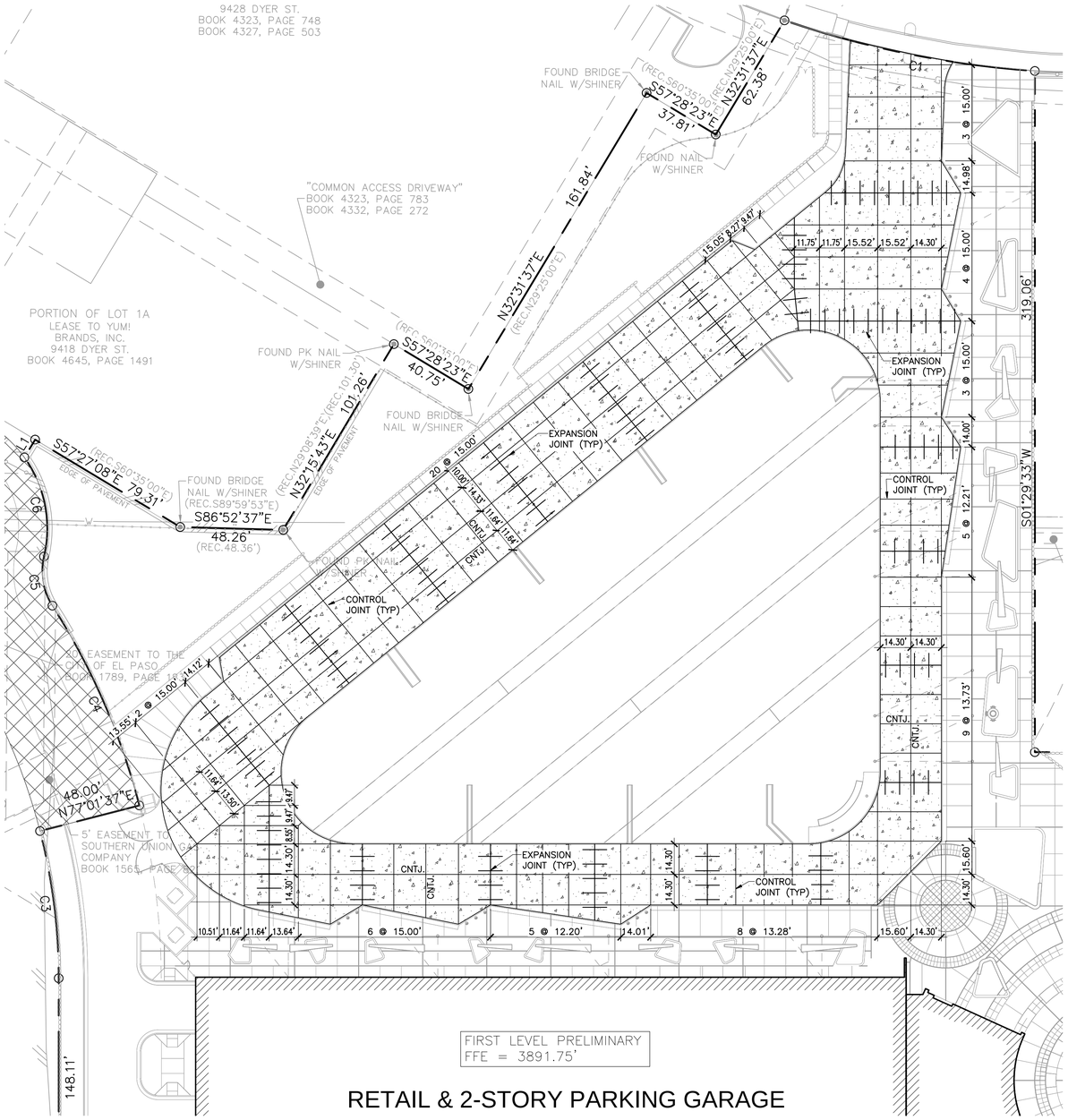

LEGEND:

CNTJ — CONTROL JOINT

EXPANSION JOINT

HEAVY DUTY CONCRETE (BUS DRIVEWAY)

SOIL PREPARATION UNDER PCC PAVEMENT NOTES:

1. REMOVE ALL VEGETATION, ORGANIC MATERIAL OR OTHER DELETERIOUS MATERIALS.
2. PROOF ROLL THE PAVEMENT AREAS WITH A FULLY LOADED TANDEM AXLE DUMP TRUCK OR SIMILAR PNEUMATIC-TIRE EQUIPMENT TO LOCATE AREAS OF LOOSE SUBGRADE.
3. IN AREAS TO BE CUT, THE PROOFROLL SHOULD BE PERFORMED AFTER THE FINAL GRADE IS ESTABLISHED.
4. IN AREAS TO BE FILLED, THE PROFFROLL SHOULD BE PERFORMED PRIOR TO PLACEMENT OF ENGINEERED FILL.
5. AREAS OF LOOSE OR SOFT SUBGRADE ENCOUNTERED IN THE PROOFROLL SHOULD BE REMOVED AND REPLACED WITH ENGINEERED FILL, OR MOISTURE CONDITIONED (DRIED OR WETTED, AS NEEDED) AND COMPACTED IN PLACE.
6. PERFORM ALL CUT AND FILL OPERATIONS. ALL FILL SHALL BE INSTALLED IN MAXIMUM 8 INCH LIFTS AND COMPACTED TO MINIMUM 95% OF MAXIMUM DRY DENSITY AND AT +/-3% OF OPTIMUM MISTURE CONTENT IN ACCORDANCE WITH ASTM D 1557.
7. SOIL INVESTIGATION REPORT BY CQC SHOULD BE FOLLOWED.

1 BUS DRIVE CONCRETE PAVEMENT AND JOINT LOCATION PLAN

SCALE: 1"=30'-0"

100% CONSTRUCTION DOCUMENTS

REFERENCES – BENCHMARKS

BY	REVISIONS	DATE

ENGINEER'S SEAL

STATE OF TEXAS — SERGIO CASTILLO — 122621 — LICENSED PROFESSIONAL ENGINEER — 3/3/16

SCALE
HOR: SHOWN
VER: SHOWN

DATE	03/03/2016
DESIGN BY	S.C.
DRAWN BY	M.L.
CHKD. BY	S.C.
APPD. BY	S.C.

PROJECT NAME

NORTHGATE TRANSFEER CENTER

EL PASO TEXAS

CITY OF EL PASO

CAPITAL IMPROVEMENT DEPARTMENT

SER Group, Llc

Sustainable Engineering Resource Group, LLC
221 N. Kansas St., Suite 700 El Paso, TX. 79901
T 915.875.1990 | F 915.603.4290
www.serengroupusa.com
ENGINEERING FIRM NO. F-12625

SHEET TITLE

BUS DRIVE CONCRETE PAVEMENT AND JOINT LOCATION PLAN

SHEET

C700

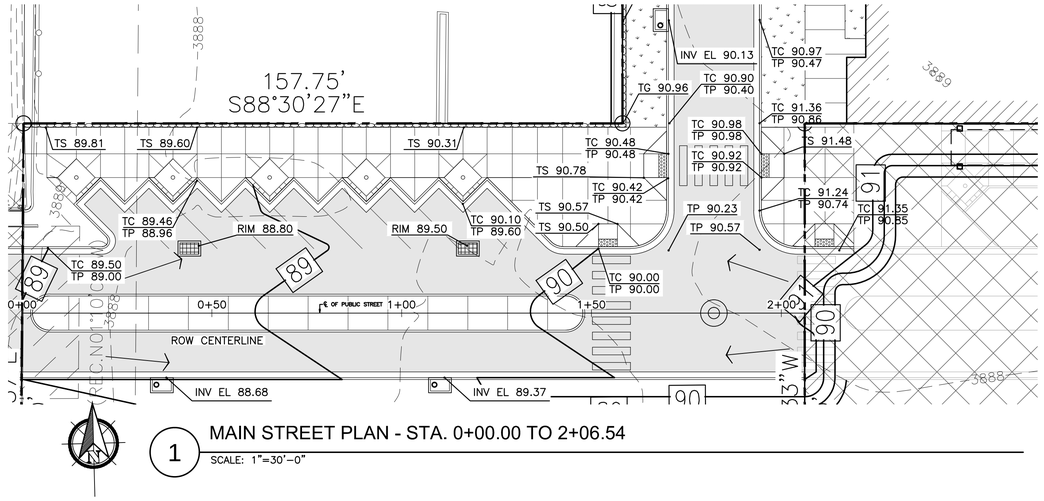

1 MAIN STREET PLAN - STA. 0+00.00 TO 2+06.54

SCALE: 1"=30'-0"

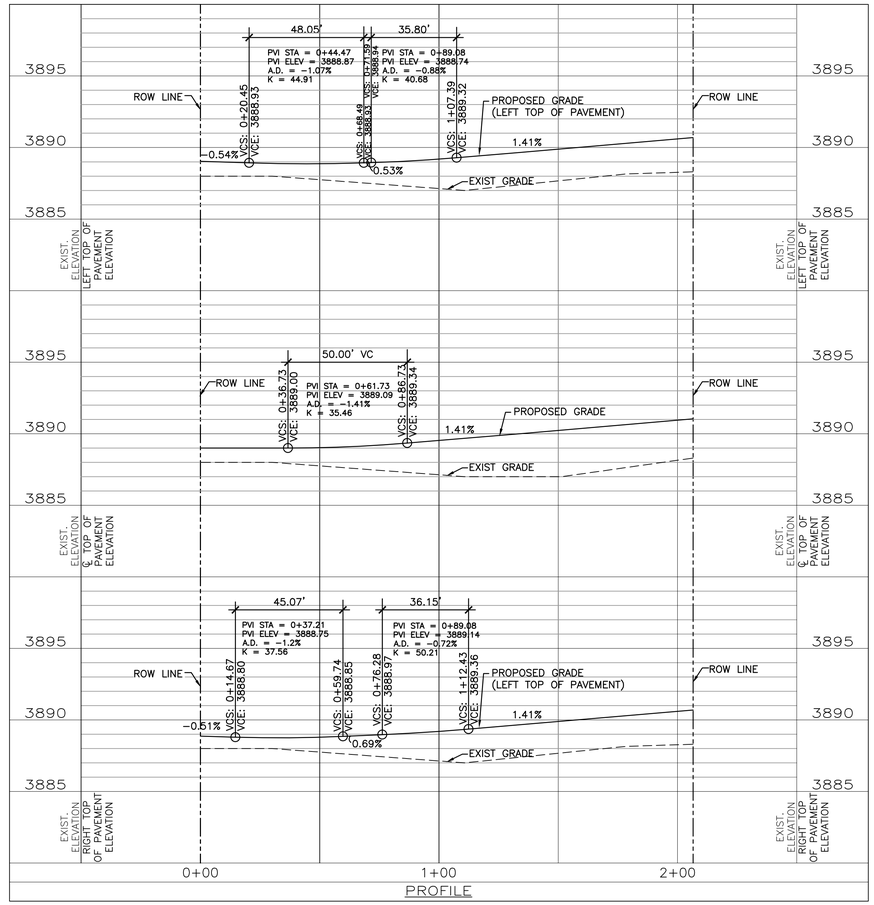

2 MAIN STREET PROFILE - STA. 0+00.00 TO 2+06.54

SCALE: HORIZONTAL 1"=30'-0"
VERTICAL 1"=5'-0"

100% CONSTRUCTION DOCUMENTS

Sustainable Engineering Resource Group, LLC
221 N. Kansas St., Suite 700 | El Paso, TX 79901
T 915.875.1990 | F 915.603.4290
www.sergroupusa.com
ENGINEERING FIRM NO. F-12635

SER Group, Llc

REFERENCES – BENCHMARKS

BY	REVISIONS	DATE

ENGINEER'S SEAL

SERGIO CASTILLO 94521 LICENSED PROFESSIONAL ENGINEER 3/3/16

SCALE
HOR: SHOWN
VER: SHOWN

DATE 03/03/2016
DESIGN BY S.C.
DRAWN BY M.A.
CHKD. BY S.C.
APPD. BY S.C.

PROJECT NAME

NORTHGATE TRANSFER CENTER

EL PASO TEXAS

CITY OF EL PASO

CAPITAL IMPROVEMENT DEPARTMENT

SHEET TITLE

MAIN STREET PLAN AND PROFILE

SHEET

C800

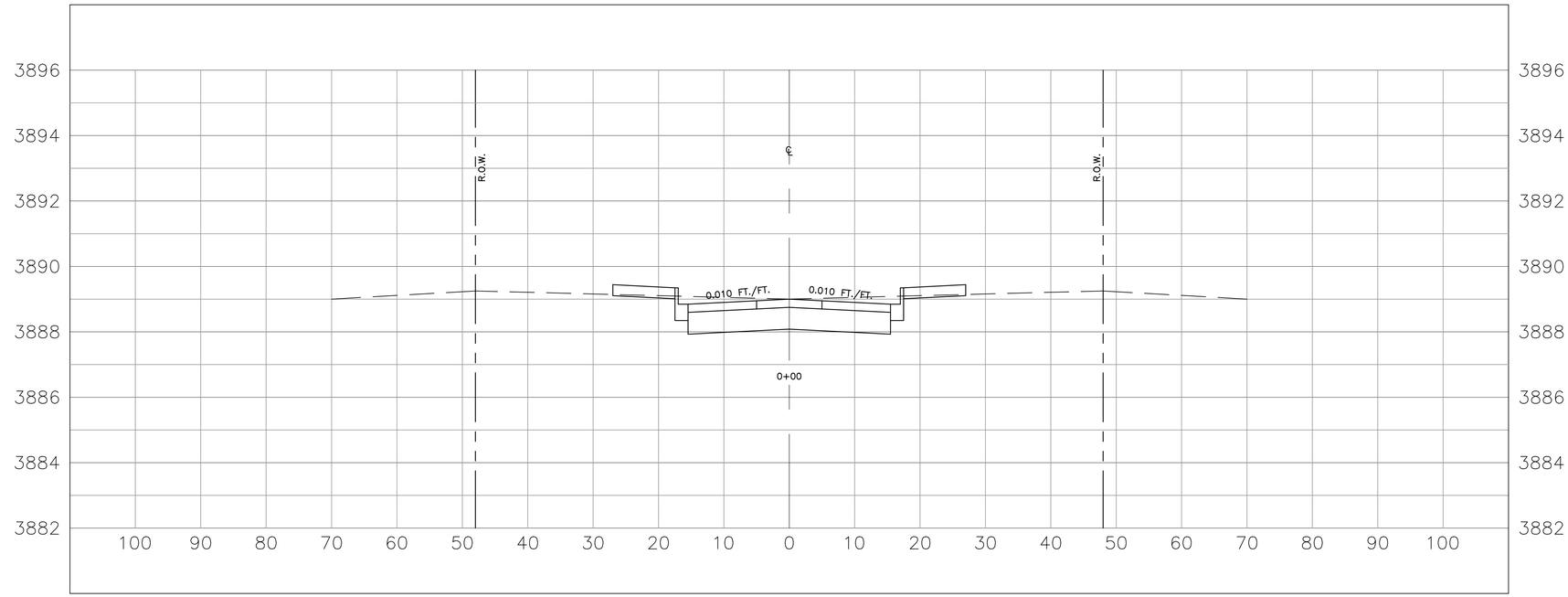

1 MAIN STREET CROSS SECTION (STA. 0+00.00)

SCALE: HORIZONTAL 1"=10'-0"
VERTICAL 1"=2'-0"

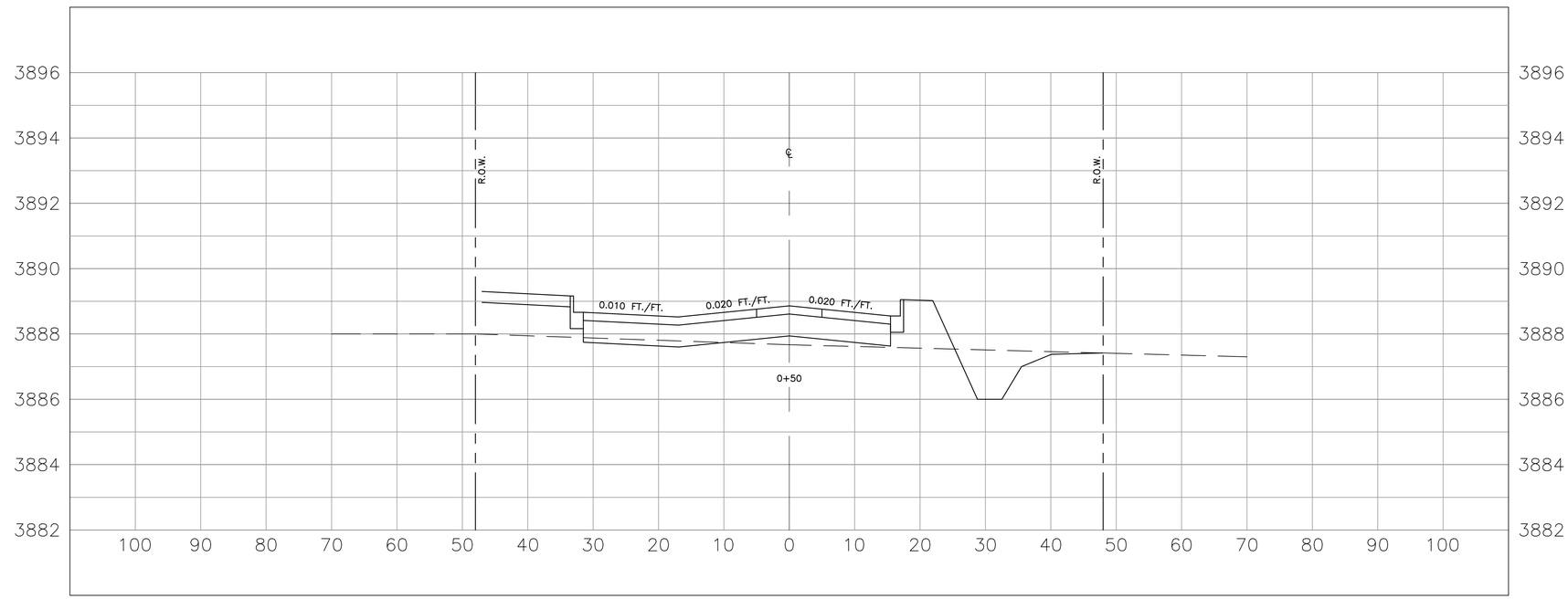

2 MAIN STREET CROSS SECTION (STA. 0+50.00)

SCALE: HORIZONTAL 1"=10'-0"
VERTICAL 1"=2'-0"

100% CONSTRUCTION DOCUMENTS

Sustainable Engineering Resource Group, LLC
221 N. Kansas St., Suite 700 | El Paso, TX. 79901
T 915.875.1990 | F 915.603.4290
www.segroupusa.com
ENGINEERING FIRM NO. F-13625

SER Group, Llc

REFERENCES -- BENCHMARKS

BY	REVISIONS	DATE

ENGINEER'S SEAL

SCALE
HOR: SHOWN
VER: SHOWN

DATE 03/03/2016
DESIGN BY S.C.
DRAWN BY M.A.
CHKD. BY S.C.
APPD. BY S.C.

PROJECT NAME

NORTHGATE TRANSFER CENTER

EL PASO TEXAS

CITY OF EL PASO

CAPITAL IMPROVEMENT DEPARTMENT

SHEET TITLE

MAIN STREET CROSS SECTIONS

SHEET

C900

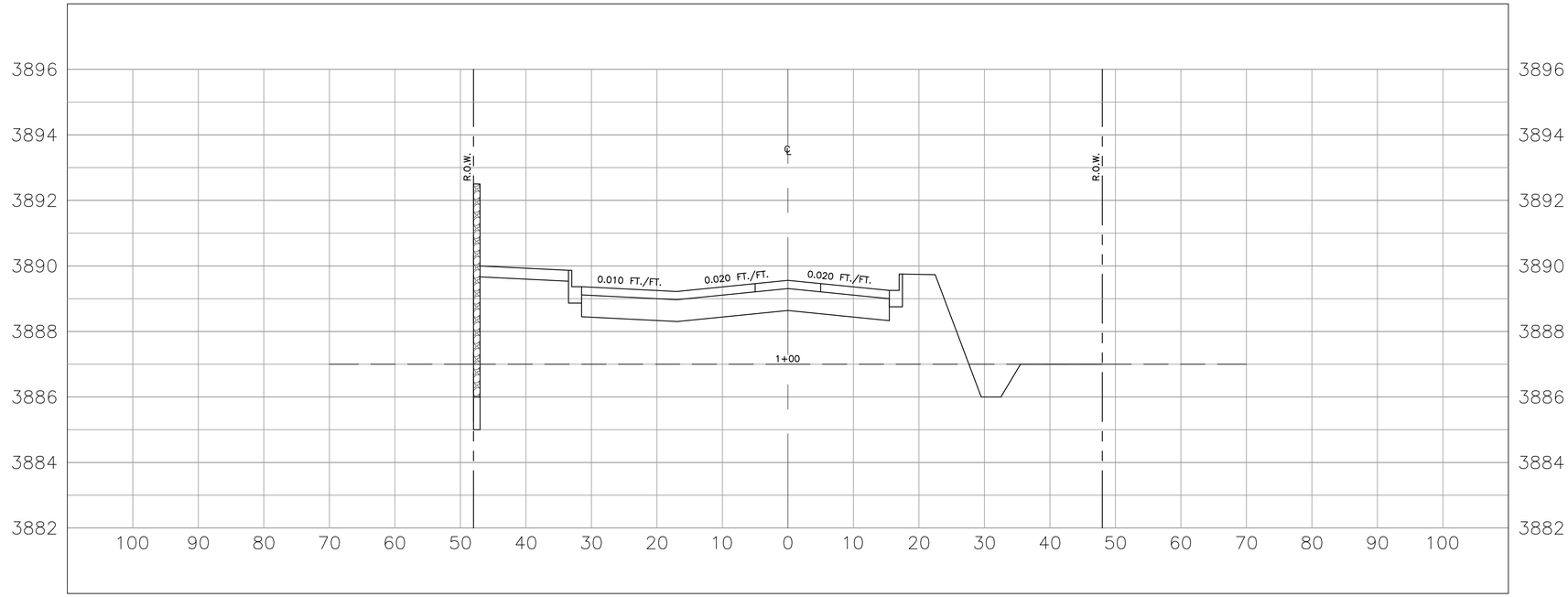

1 MAIN STREET CROSS SECTION (STA. 1+00.00)

SCALE: HORIZONTAL 1"=10'-0"
VERTICAL 1"=2'-0"

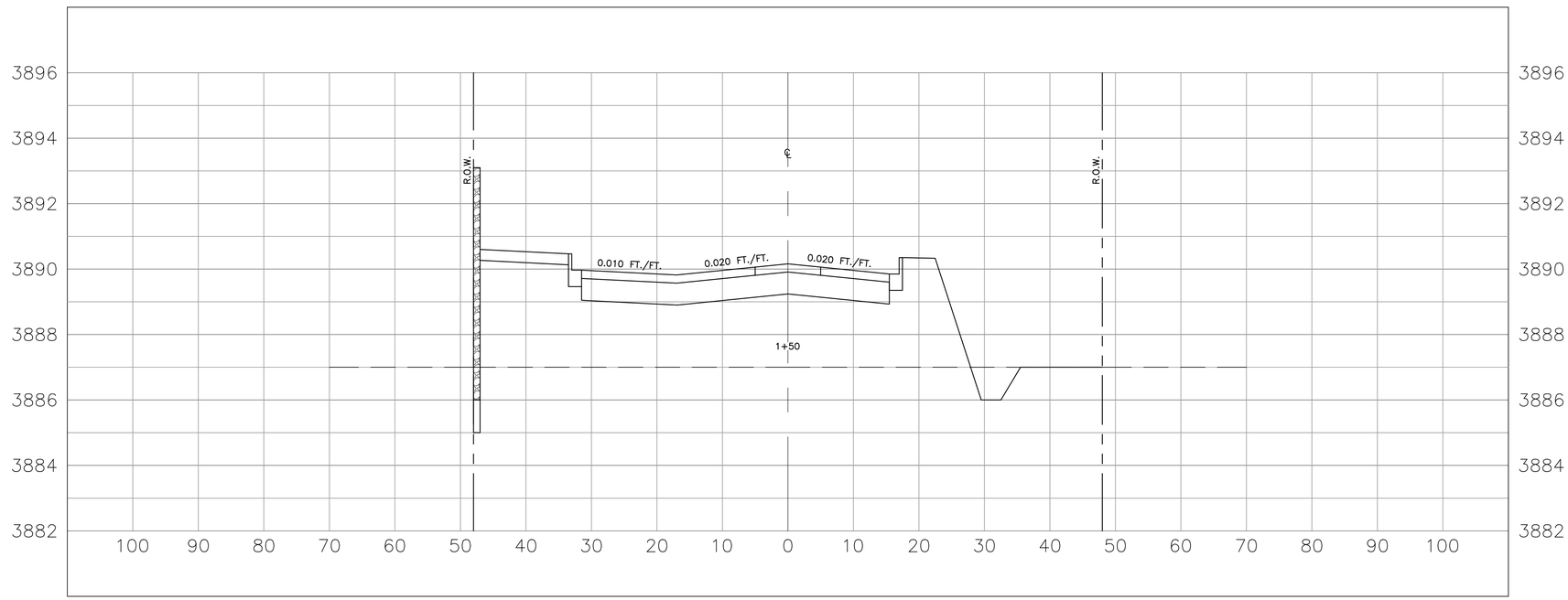

2 MAIN STREET CROSS SECTION (STA. 1+50.00)

SCALE: HORIZONTAL 1"=10'-0"
VERTICAL 1"=2'-0"

100% CONSTRUCTION DOCUMENTS

REFERENCES -- BENCHMARKS

BY	REVISIONS	DATE

ENGINEER'S SEAL

SERGIO CASTILLO 124521 LICENSED PROFESSIONAL ENGINEER 3/3/16

SCALE
HOR: SHOWN
VER: SHOWN

DATE 03/03/2016
DESIGN BY S.C.
DRAWN BY M.A.
CHKD. BY S.C.
APPD. BY S.C.

PROJECT NAME

NORTHGATE TRANSFER CENTER

EL PASO TEXAS

CITY OF EL PASO

CAPITAL IMPROVEMENT DEPARTMENT

SHEET TITLE

MAIN STREET CROSS SECTIONS

SHEET

C901

Sustainable Engineering Resource Group, LLC
221 N. Kansas St., Suite 700 | El Paso, TX 79901
T 915.875.1990 | F 915.603.4290
www.sergroupusa.com
ENGINEERING FIRM NO. F-13605

SER Group, Llc

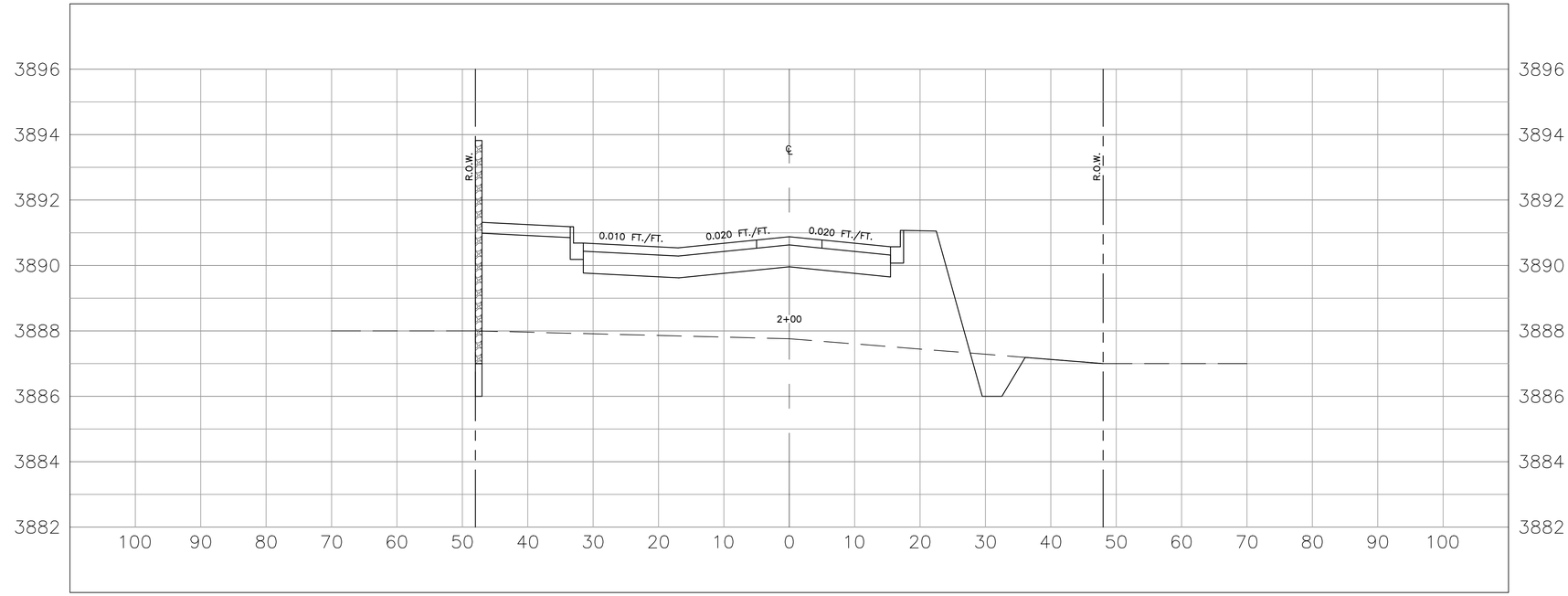

1 MAIN STREET CROSS SECTION (STA. 2+00.00)

SCALE: HORIZONTAL 1"=10'-0"
VERTICAL 1"=2'-0"

100% CONSTRUCTION DOCUMENTS

SER Group, Llc
Sustainable Engineering Resource Group, LLC
221 N. Kansas St., Suite 700 | El Paso, TX. 79901
T 915.875.1990 | F 915.603.4290
www.sergroupusa.com
ENGINEERING FIRM NO. F-13603

REFERENCES – BENCHMARKS

BY	REVISIONS	DATE

ENGINEER'S SEAL

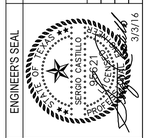

SCALE
HOR: SHOWN
VER: SHOWN

DATE 03/03/2016
DESIGN BY S.C.
DRAWN BY A.A.
CHKD. BY S.C.
APPD. BY S.C.

PROJECT NAME

NORTHGATE TRANSFER CENTER

EL PASO TEXAS

CITY OF EL PASO

CAPITAL IMPROVEMENT DEPARTMENT

SHEET TITLE

MAIN STREET CROSS SECTIONS

SHEET

C902

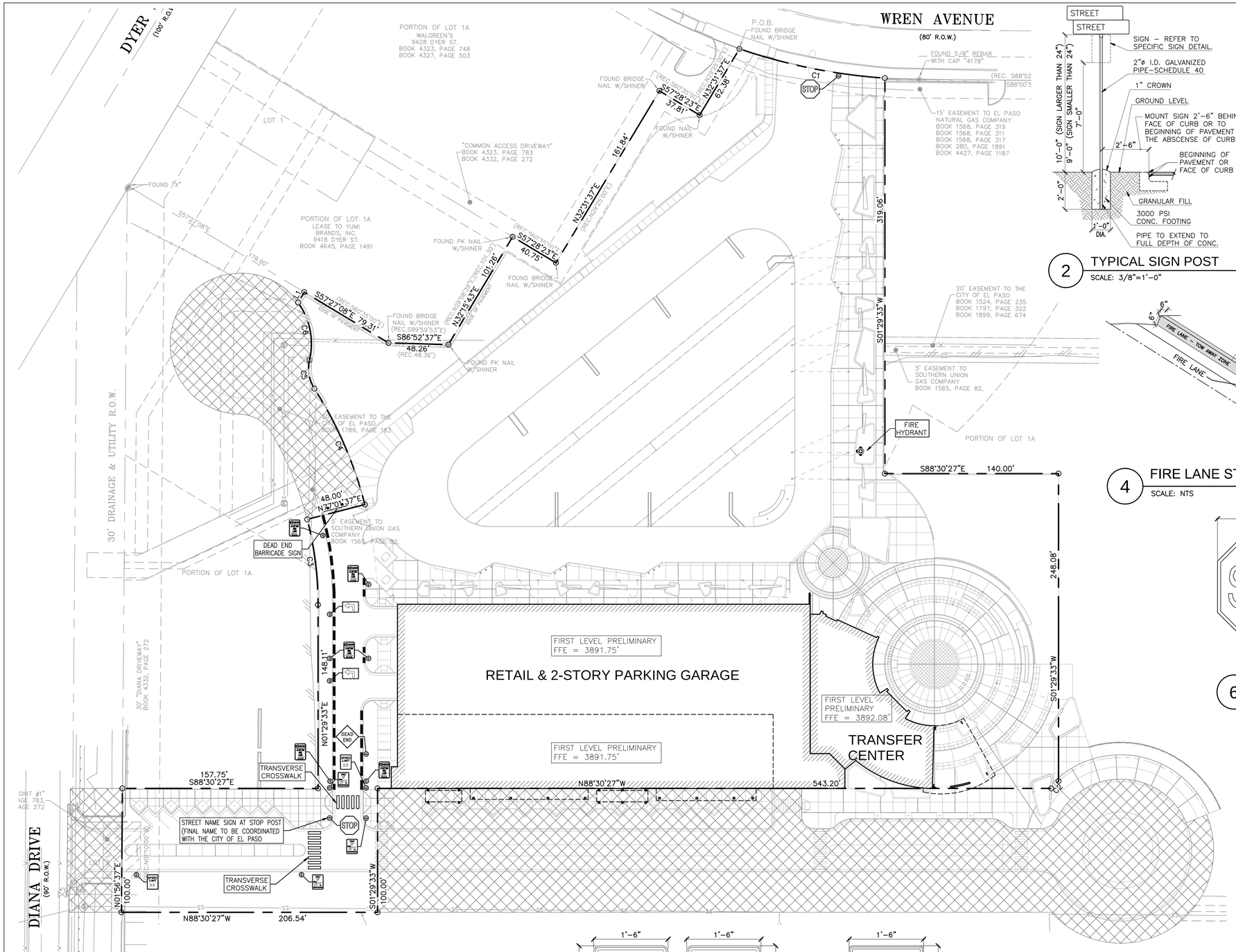

1 SITE PAVEMENT MARKING AND SIGNAGE PLAN
SCALE: 1"=40'–0"

2 TYPICAL SIGN POST
SCALE: 3/8"=1'–0"

3 TRANSVERSE CROSSWALK STRIPING
SCALE: 3/8"=1'–0"

4 FIRE LANE STRIPING DETAIL
SCALE: NTS

5 LEFT TURN SIGN
SCALE: 1"=1'–0"

R1–1 STOP (30"x30")

6 STOP SIGN
SCALE: 1"=1'–0"

W14–1 DEAD END (24"x24")

7 DEAD END SIGN
SCALE: 1"=1'–0"

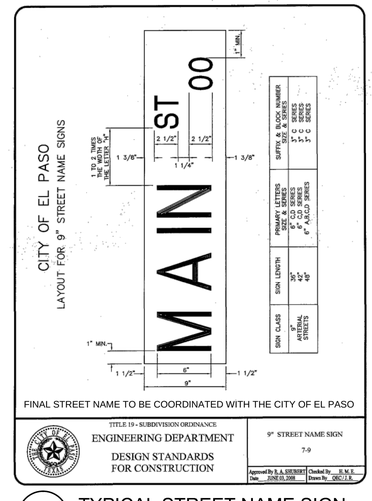

8 TYPICAL STREET NAME SIGN
SCALE: NTS

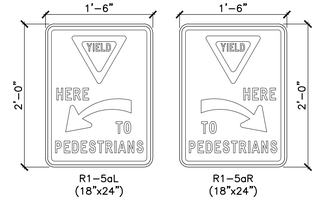

11 PEDESTRIAN YIELD SIGN
SCALE: 1"=1'–0"

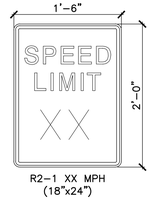

10 SPEED LIMIT SIGN
SCALE: 1"=1'–0"

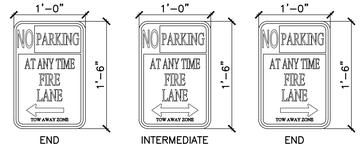

9 NO PARKING FIRE LANE SIGN
SCALE: 1"=1'–0"

PAVEMENT MARKINGS NOTES:

1. USE CONTRACTOR GRADE ACRYLIC, ALKYD, OR CHLORINATED RUBER STRIPING PAINT FOR THE CONCRETE PAVEMENT OR RESTRIPING.
   COLOR SCHEDULE
   A. STALL LINES & ACCESS ROUTE – 4" WIDE, WHITE
2. APPLY MARKING PAINT IN DRY WEATHER WHEN PAVEMENT AT ATMOSPHERIC TEMPERATURES ARE FIFTY (50) DEGREES FARENHEIT OR ABOVE (OR MFG. SPECIFICATION) AND ARE ANTICIPATED TO REMAIN ABOVE FIFTY (50) DEGREES FARENHEIT FOR FOUR (4) HOURS AFTER COMPLETING APPLICATION.

100% CONSTRUCTION DOCUMENTS

REFERENCES – BENCHMARKS

BY	REVISIONS	DATE

ENGINEER'S SEAL

SCALE
HOR: SHOWN
VER: SHOWN

DATE 03/03/2016
DESIGN BY S.C.
DRAWN BY M.L.
CHKD. BY S.C.
APPD. BY S.C.

PROJECT NAME
NORTHGATE TRANSFER CENTER

CITY OF EL PASO
CAPITAL IMPROVEMENT DEPARTMENT

EL PASO TEXAS

SHEET TITLE
SITE PAVEMENT MARKING AND SIGNAGE PLAN

SHEET
C1000

Sustainable Engineering Resource Group, LLC
221 N. Kansas St., Suite 7000 El Paso, TX 79901
T 915.875.1990 | F 915.603.4290
www.sergroupusa.com
ENGINEERING FIRM NO. F-12623

LEGEND:

Symbol	Meaning
F.F.E.	FINISHED FLOOR ELEVATION.
— — 40.00 — —	EXISTING CONTOURS IN FEET.
—-—-—-	PROPERTY LINE
—[54]—	NEW CONTOURS IN FEET.
—— SF ——	SILT FENCE
(hatched box)	CONTRACTOR'S PROPOSED STAGING AREA
(toilet symbol)	PRELIMINARY PORTABLE TOILET LOCATION

SILT FENCE GENERAL NOTES:

1. STEEL POSTS WHICH SUPPORT THE SILT FENCE SHALL BE INSTALLED ON A SLIGHT ANGLE TOWARD THE ANTICIPATED RUNOFF SOURCE. POST MUST BE EMBEDDED A MINIMUM OF ONE FOOT.

2. THE TOE OF THE SILT FENCE SHALL BE TRENCHED IN WITH A SPADE OR MECHANICAL TRENCHER, SO THAT THE DOWNSLOPE FACE OF THE TRENCH IS FLAT AND PERPENDICULAR TO THE LINE OF FLOW. WHERE FENCE CANNOT BE TRENCHED IN (e.g. PAVEMENT), WEIGHT FABRIC FLAP WITH ROCK ON UPHILL SIDE TO PREVENT FLOW FROM SEEPING UNDER FENCE.

3. THE TRENCH MUST BE A MINIMUM OF 6 INCHES DEEP AND 6 INCHES WIDE TO ALLOW FOR THE SILT FENCE FABRIC TO BE LAID IN THE GROUND AND BACKFILLED WITH COMPACTED MATERIAL.

4. SILT FENCE SHOULD BE SECURELY FASTENED TO EACH STEEL SUPPORT POST OR TO WOVEN WIRE, WHICH IN TURN IS ATTACHED TO THE STEEL FENCE POST. THERE SHALL BE A 3 FOOT OVERLAP, SECURELY FASTENED WHERE ENDS OF FABRIC MEET.

5. INSPECTION SHALL BE MADE EVERY TWO WEEKS AND AFTER EACH 1/2" RAINFALL. REPAIR OR REPLACEMENT SHALL BE MADE PROMPTLY AS NEEDED.

6. SILT FENCE SHALL BE REMOVED WHEN THE SITE IS COMPLETELY STABILIZED SO AS NOT TO BLOCK OR IMPEDE STORM FLOW OR DRAINAGE.

7. ACCUMULATED SILT SHALL BE REMOVED WHEN IT REACHES A DEPTH OF HALF THE HEIGHT OF THE FENCE. THE SILT SHALL BE DISPOSED OF AT AN APPROVED SITE AND IN SUCH A MANNER AS TO NOT CONTRIBUTE TO ADDITIONAL SILTATION.

NOTES:

1. INSTALL SILT FENCE AROUND DOWNHILL SIDE OF SOIL STOCKPILES AND DISTURBED AREAS.
2. CONTRACTOR SHALL IMMEDIATELY REMOVE SEDIMENT OR MUD FROM STREETS AND DRAINAGE STRUCTURES, AND SHALL KEEP PUBLIC ROADWAYS MUD FREE AT ALL TIMES.
3. PERMANENT SITE RESTORATION: ALL DISTURBED AREAS SHALL BE COVERED WITH SOD AS SPECIFIED IN STANDARD SPECIFICATIONS FOR PUBLIC WORKS CONSTRUCTION, LATEST EDITION. SOD MATERIAL PER ITEM 2.15, INSTALLED PER ITEM 3.9 SHALL BE USED.
4. PERMANENT SITE RESTORATION: ALL DISTURBED AREAS SHALL BE HYDROMULCHED AS SPECIFIED IN STANDARD SPECIFICATIONS FOR PUBLIC WORKS CONSTRUCTION, LATEST EDITION. HYDRO MULCH MATERIAL PER ITEM 2.15.3, INSTALLED PER ITEM 3.10 SHALL BE USED.

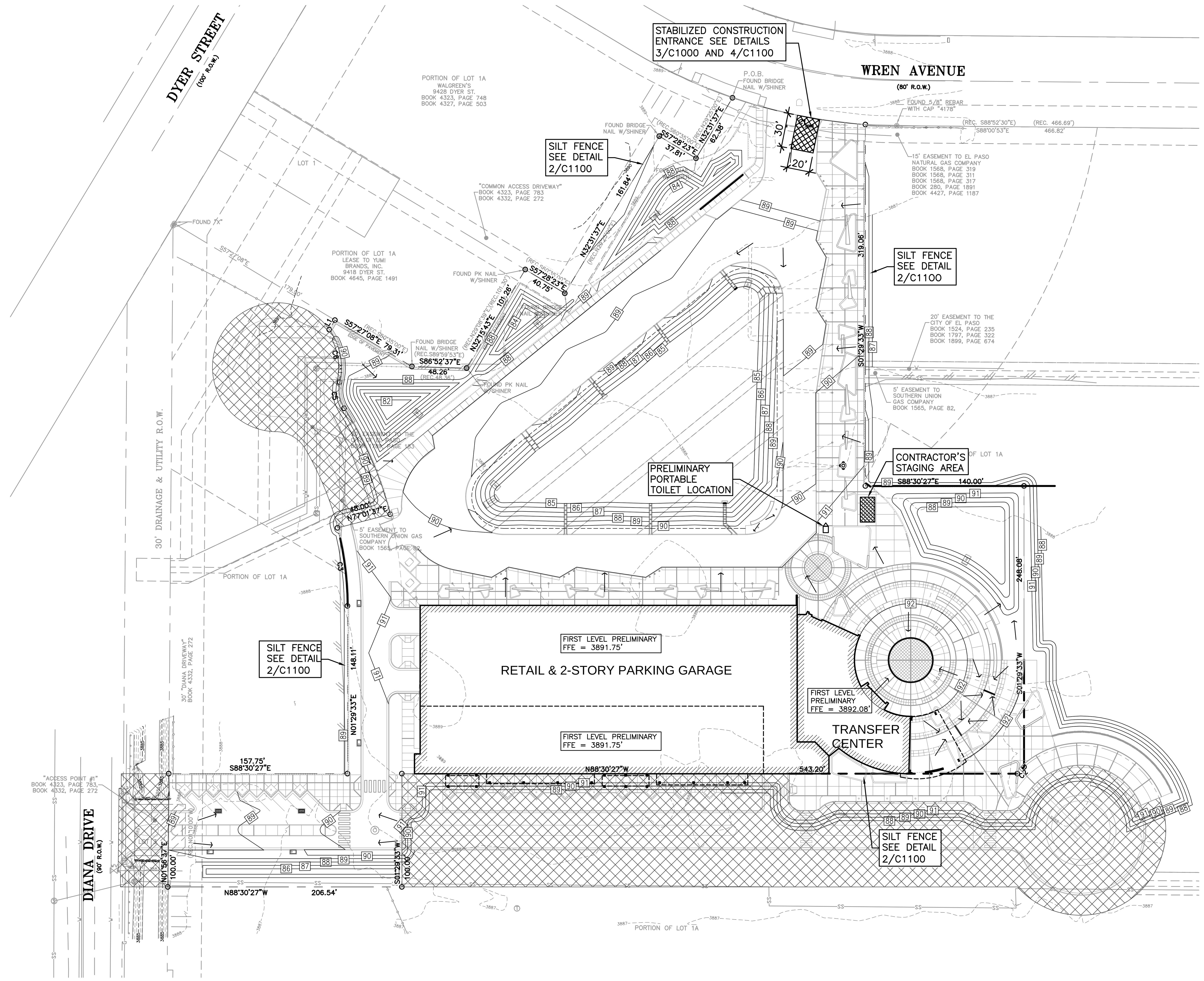

1 EROSION CONTROL PLAN

SCALE: 1"=60'-0"

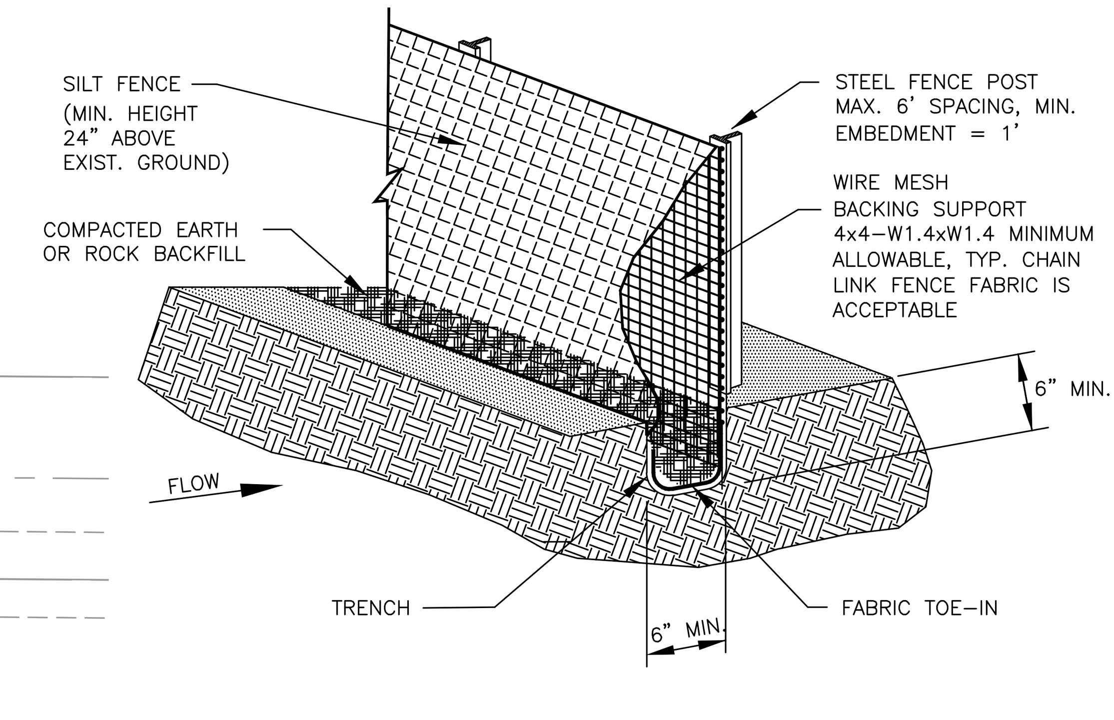

2 ISOMETRIC PLAN VIEW

SCALE: NTS

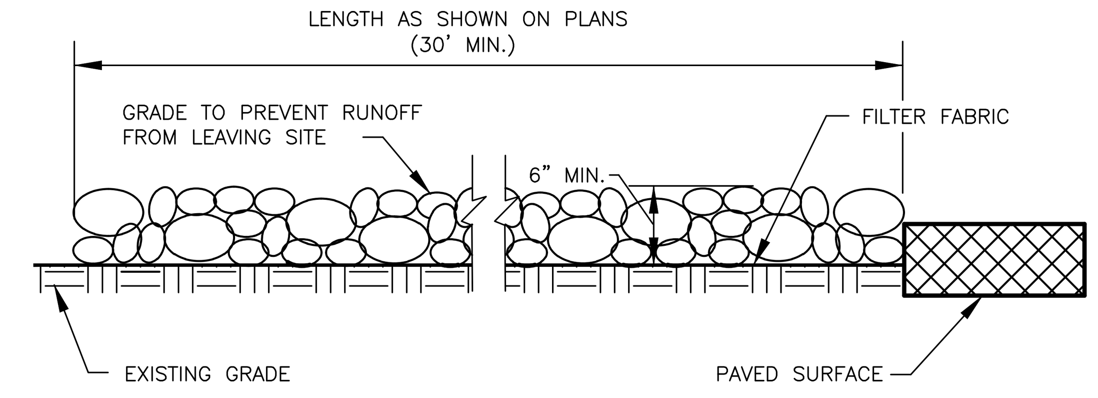

3 PROFILE VIEW

SCALE: NTS

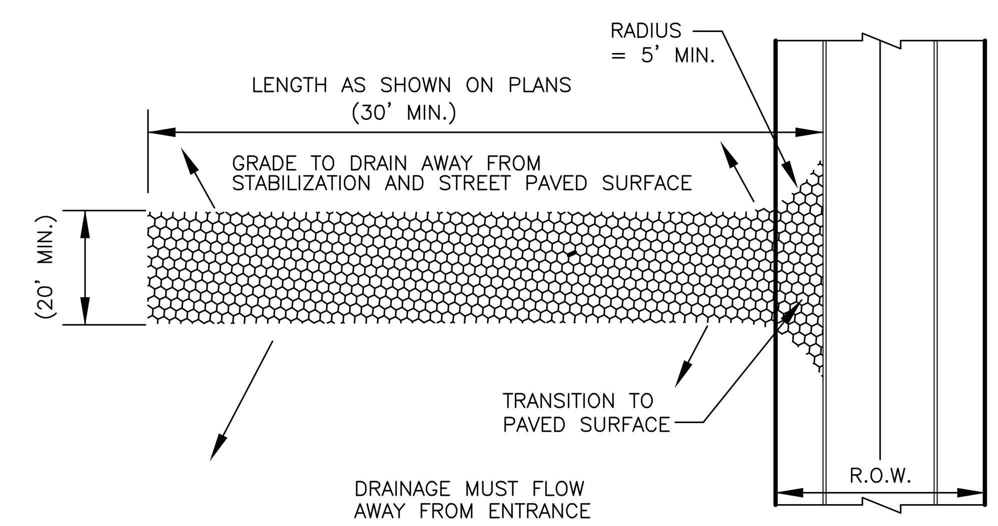

4 PLAN VIEW

SCALE: NTS

BEST MANAGEMENT PRACTICES CONTROLS

1. STRUCTURAL MEASURES SHALL BE MAINTAINED THROUGHOUT THE LIFE OF THE PROJECT IN EFFECTIVE OPERATING CONDITION.

2. DOCUMENTATION OF MAINTENANCE ACTIVITIES INCLUDING FREQUENCY, LOT DESIGNATION, INSPECTIN OF STRUCTURAL CONTROLS, MATERIAL STORAGE AREAS VEHICLE ENTRANCE AND EXITS: ACTIONS TAKEN AND INSPECTORS NAME.

3. CONSTRUCTION SITE NOTICE WILL BE MAINTAINED ON SITE.

4. COPY OF SWPPP SHALL BE KEPT ON SITE.

5. PERIMETER MUST RETAIN THE SWPS NOI AND INSPECTION LOG FOR A MINIMUM OF 3 YEARS FROM THE TERMINATION AND FINAL STABILIZATION OF PROJECT.

I WASTE MATERIAL:

ALL WASTE MATERIALS, INCLUDING CONSTRUCTION DEBRIS, SHALL BE COLLECTED AND STORED IN A SECURELY LIDDED METAL DUMPSTER. NO CONSTRUCTION WASTE MATERIAL SHALL BE BURIED ON SITE. THE TRANSIT DUMPSTER SHALL COMPLY WITH ORDINANCE 18.52.010 (ENCLOSURE AND REMOVAL OF WASTE MATERIALS DURING CONSTRUCTION). THE DUMPSTER SHALL BE EMPTIED AS NECESSARY OR AS REQUIRED BY ORDINANCE 9.04 (SOLID WASTE MANAGEMENT) AND THE TRASH SHALL BE HAULED TO A LICENSED LANDFILL.

II HAZARDOUS WASTE:

AT A MINIMUM ANY PRODUCTS IN THE FOLLOWING CATEGORIES SHALL BE CONSIDERED HAZARDOUS: PAINT, ACIDS FOR CLEANING MASONRY SURFACES, CLEANING SOLVENTS, ASPHALT PRODUCTS, CHEMICAL ADDITIVES FOR SPILL STABILIZATION, CURING COMPOUNDS AND ADDITIVES. IN THE EVENT OF A SPILL WHICH MAY BE HAZARDOUS, THE CONTRACTOR SHALL TAKE IMMEDIATE ACTION AND CONTACT THE FIRE DEPARTMENT AND TNRCC.

III SANITARY WASTE:

THE FOLLOWING PRACTICES SHALL BE USED TO REDUCE THE RISK OF SPILLS OR OTHER ACCIDENTAL EXPOSURES OF MATERIALS TO STORM WATER RUNOFF.

IV SPILL PREVENTION:

ALL SANITARY WASTE SHALL BE COLLECTED FROM THE CONSTRUCTION PORTABLE UNITS AS NECESSARY OR AS REQUIRED, CHAPTER 18.08 (BUILDING CODE) BY A LICENSED SANITARY WASTE MANAGEMENT CONTRACTOR. ALL WASTE MATERIAL SHALL BE THE RESPONSIBILITY OF THE CONTRACTOR.

V GOOD HOUSEKEEPING:

A. STORE ONLY ENOUGH PRODUCTS REQUIRED TO DO THE JOB
B. NEATLY STORE MATERIALS ON-SITE IN AN ORDERLY MANNER.
C. KEEP PRODUCTS IN THEIR ORIGINAL CONTAINER
D. DO NOT MIX SUBSTANCES WITH ONE ANOTHER. UNLESS OTHERWISE RECOMMENDED BY THE MANUFACTURER.
E. USE ENTIRE CONTENTS OF A PRODUCT BEFORE DISPOSING THE CONTAINER.
F. FOLLOW MANUFACTURE'S RECOMMENDATIONS FOR PROPER USE AND DISPOSAL.

VI HAZARDOUS PRODUCTS:

PRACTICES TO REDUCE RISKS:

A. KEEP PRODUCTS IN THEIR ORIGINAL CONTAINER IF AT ALL POSSIBLE
B. RETAIN ORIGINAL LABELS, PRODUCT INFORMATION AND MATERIAL SAFETY DATA SHEETS (MSDS)
C. DISPOSE SURPLUS PRODUCTS IN ACCORDANCE WITH MANUFACTURER'S OR LOCAL AND STATE RECOMMENDED METHODS.

VII PETROLEUM PRODUCTS:

ALL ON-SITE VEHICLES SHALL BE MONITORED FOR LEAKS AND RECEIVE REGULAR PREVENTIVE MAINTENANCE TO REDUCE THE CHANGE OF LEAKAGE. PETROLEUM PRODUCTS SHALL BE STORED IN TIGHTLY SEALED CONTAINERS WHICH ARE CLEARLY LABELED. ANY ASPHALT SUBSTANCES USED ON-SITE SHALL BE APPLIED ACCORDING TO THE MANUFACTURER'S RECOMMENDATION.

VIII SPILL CONTROL PRACTICES:

A. MANUFACTURER'S RECOMMENDED METHODS FOR SPILL CLEANUP SHALL BE CLEARLY POSTED AND SITE PERSONNEL SHALL BE MADE AWARE OF THE PROCEDURES.
B. MATERIALS AND EQUIPMENT NECESSARY FOR SPILL CLEANUP SHALL BE KEPT IN THE MATERIAL STORAGE AREA ON-SITE.
C. ALL SPILLS SHALL BE CLEANED UP IMMEDIATELY AFTER DISCOVERY.
D. SPILL AREA SHALL BE WELL VENTILATED AND APPROPRIATE CLOTHING WILL BE WORN.
E. ANY SPILL SHALL BE REPORTED TO THE APPROPRIATE GOVERNMENTAL AGENCY.
F. MEASURES SHALL BE TAKEN TO PREVENT SPILL FROM REOCCURRING.

IX MAINTENANCE AND INSPECTION PROCEDURES:

ALL POLLUTION PREVENTION MEASURES SHALL BE INSPECTED AT LEAST ONCE A MONTH OR WITHIN 24-HOURS PRIOR TO ANTICIPATED STORM EVENT AND FOLLOWING A STORM EVENT OF 0.50 INCHES OR MORE. INSPECTION IN FINAL STABILIZED AREAS OR DURING ARID PERIODS WILL BE CONDUCTED MONTHLY. BEST MANAGEMENT PRACTICES AND POLLUTION CONTROL PROCEDURES SHALL BE INSPECTED FOR ADEQUACY. A REPORT SUMMARIZING THE SCOPE OF INSPECTION SHALL BE DONE AND RETAINED ALONG WITH THE SDPCP.

X REMARKS:

DISPOSAL AREAS, STOCKPILES, AND HAUL ROADS SHALL BE CONSTRUCTED IN A MANNER THAT WILL MINIMIZE AND CONTROL THE AMOUNT OF SEDIMENT THAT MAY ENTER RECEIVING WATERS. DISPOSAL AREAS SHALL NOT BE LOCATED IN ANY WETLAND, WATERBODY OR STREAM BED. CONSTRUCTION STAGING AREAS AND VEHICLE MAINTENANCE AREAS SHALL BE CONSTRUCTED BY THE CONTRACTOR IN A MANNER TO MINIMIZE THE RUNOFF OF POLLUTANTS. ALL WATERWAYS SHALL BE CLEANED AS SOON AS PRACTICABLE OF TEMPORARY EMBANKMENT, TEMPORARY BRIDGES, MATTING, FALSE WORK, PILING DEBRIS OR OTHER OBSTRUCTIONS PLACED DURING CONSTRUCTION OPERATIONS THAT ARE NOT A PART OF THE FINISHED WORK.

XI OFFSITE VEHICLE TRACKING:

IN ADDITION TO THE STABILIZED CONSTRUCTION ENTRANCES, THE FOLLOWING MEASURES SHALL BE OBSERVED DURING CONSTRUCTION.

_X_ HAUL ROADS SHALL BE DAMPENED FOR DUST CONTROL

_X_ LOADED HAUL TRUCKS SHALL BE COVERED WITH TARPAULIN

_X_ EXCESS DIRT ON ROADS SHALL BE REMOVED IMMEDIATELY

_X_ STABILIZED CONSTRUCTION ENTRANCE

___ OTHER ______________________________

GENERAL CONTRACTOR CERTIFICATION

I CERTIFY UNDER PENALTY OF LAW THAT I UNDERSTAND THE TERMS AND CONDITIONS OF THE NATIONAL POLLUTANT DISCHARGE ELIMINATION SYSTEM (NPDES) GENERAL PERMIT THAT AUTHORIZES STORM WATER DISCHARGES ASSOCIATED WITH CONSTRUCTION ACTIVITY FROM THE CONSTRUCTION SITE IDENTIFIED AS PART OF THIS CERTIFICATION.

SIGNED: ____________________ COMPANY: ____________________

NAME: ____________________ ADDRESS: ____________________

TITLE: ____________________ TELEPHONE: ____________________

DATE: ____________________

SER Group, Llc
Sustainable Engineering Resource Group, LLC
221 N. Kansas St., Suite 700 | El Paso, TX 79901
T 915.875.1990 | F 915.603.4290
www.sergroupusa.com
ENGINEERING FIRM NO.: F-12623

100% CONSTRUCTION DOCUMENTS

REFERENCES -- BENCHMARKS

DATE	REVISIONS	BY

ENGINEER'S SEAL

STATE OF TEXAS SERGIO CASTILLO 95621 LICENSED PROFESSIONAL ENGINEER 3/3/16

SCALE
HOR: SHOWN
VER: SHOWN

DATE 03/03/2016
DESIGN BY S.C.
DRAWN BY R.M.
CHKD. BY S.C.
APPD. BY S.C.

PROJECT NAME
NORTHGATE TRANSFER CENTER
EL PASO TEXAS

CITY OF EL PASO
CAPITAL IMPROVEMENT DEPARTMENT

SHEET TITLE
EROSION CONTROL PLAN

SHEET
C1100

DRAWING NOTES

1. THE WORK SHALL BE PERFORMED IN ACCORDANCE WITH APPLICABLE CODE REQUIREMENTS, AND APPLICABLE REQUIREMENTS OF OTHER REGULATORY AGENCIES.

2. UNLESS OTHERWISE SPECIFIED, SPECIFIC REFERENCES TO CODES, REGULATIONS, STANDARDS, MANUFACTURERS' INSTRUCTIONS, OR REQUIREMENTS OF REGULATORY AGENCIES, WHEN USED TO SPECIFY REQUIREMENTS FOR MATERIALS OF DESIGN ELEMENTS SHALL MEAN THE LATEST EDITION OF EACH IN EFFECT AT THE DATE OF SUBMISSION OF BIDS, OR THE DATE OF THE CHANGE ORDER OR FIELD ORDERS, AS APPLICABLE,

3. THE INTENT OF THE DRAWINGS AND SPECIFICATIONS IS TO CONSTRUCT THE WORK INDICATED ON THE DRAWINGS IN ACCORDANCE WITH THE INTERNATIONAL BUILDING CODE AND NFPA 101-LIFE SAFETY CODE-2006.

4. REFER TO SPECIFICATIONS FOR ADDITIONAL REQUIREMENTS.

5. REPORT DISCREPANCIES IN DRAWINGS OR SPECIFICATIONS TO THE ENGINEER FOR CLARIFICATIONS AND ADJUSTMENTS BEFORE COMMENCING WORK. ANY DEVIATIONS OR CHANGES IN THESE DRAWINGS WITHOUT WRITTEN ACCEPTANCE OF THE ARCHITECT SHALL ABSOLVE THE ARCHITECT OF ANY AND ALL RESPONSIBILITY OF SAID DEVIATION AND CHANGE.

6. WRITTEN DIMENSIONS TAKE PRECEDENCE OVER SCALED DIMENSIONS.

7. ROUGH GRADING WORK WILL BE REVIEWED AND ACCEPTED BY THE CONTRACTOR PRIOR TO COMMENCEMENT OF SOIL PREPARATION WORK. DO NOT BEGIN SOIL PREPARATION WORK OR FINISH GRADING WORK BEFORE ROUGH GRADING IS ACCEPTED BY THE ENGINEER.

8. EXISTING UNDERGROUND UTILITIES AND IMPROVEMENTS ARE SHOWN IN THEIR APPROXIMATE LOCATIONS BASED UPON RECORD INFORMATION AVAILABLE TO THE ARCHITECT AT THE TIME OF PREPARATION OF THESE PLANS. LOCATIONS MAY NOT HAVE BEEN VERIFIED IN THE FIELD AND NO GUARANTEE IS MADE AS TO THE ACCURACY AND COMPLETENESS OF THE INFORMATION SHOWN. THE EXACT LOCATION AND ELEVATION OF UTILITIES SHALL BE DETERMINED BY THE CONTRACTOR,

9. IF LIVE UTILITIES ARE ENCOUNTERED, NOT INDICATED PREVIOUSLY, PROTECT THE SAME FROM DAMAGE AND IMMEDIATELY NOTIFY THE OWNER AND THE AFFECTED UTILITY PROVIDER. DO NOT PROCEED UNTIL FURTHER INSTRUCTIONS ARE RECEIVED.

10. BACKFILL UTILITY LINES EXPOSED BY WORK OPERATIONS AND REPAIR BEDDING AND BACKFILL MATERIAL OF UTILITIES THAT IS DISPLACED AND DAMAGED DURING WORK. REPLACE CONTAMINATED MATERIALS WITH NEW MATERIALS MATCHING THE EXISTING MATERIALS.

11. MAKE TRANSITIONS BETWEEN CHANGES IN PAVING SMOOTH AND GRADUAL WITH NO SHARP OR ABRUPT CHANGES UNLESS SHOWN OTHERWISE.

12. SET STRAIGHT LINE GRADES BETWEEN ELEVATIONS UNLESS OTHERWISE SHOWN.

13. DIMENSIONS INDICATED ON PLANS ARE FOR HORIZONTAL CONTROL ARE ACCURATE IF MEASURED ON A LEVEL LINE. MEASURE HORIZONTAL CONTROL DIMENSIONS ON A LEVEL LINE, NOT PARALLEL WITH GROUND SLOPE.

14. REFER TO ELECTRICAL DRAWINGS FOR SITE LIGHTING CIRCUITRY, AND REFER TO THE SPECIFICATIONS FOR THE LIGHT FIXTURE SCHEDULE.

15. COORDINATE PENETRATIONS REQUIRED FOR IRRIGATION AND SUBDRAINAGE AND ELECTRICAL WORK WITH CONCRETE WORK.

16. PLANTS AND MULCH ARE NOT SHOWN ON SOME DETAILS FOR PURPOSES OF CLARITY. SEE PLANTING PLAN FOR PLANT MATERIAL AREAS AND SEE TYPICAL PLANTING AREA DETAILS AND SPECIFICATIONS FOR LIMIT OF MULCH.

17. REFER TO CIVIL DRAWINGS FOR SANITARY SEWER LINES AND STORM DRAIN LINES AND OTHER UTILITY LINES.

18. PROTECT EXISTING STRUCTURES AND SERVICES TO REMAIN INCLUDING BUT NOT LIMITED TO: UTILITIES, WALLS, STAIRS, AND RAMPS.

19. ARCHITECT TO ACCEPT LOCATIONS FOR FOOTING POURS OF LIGHT POLES AND SHADE STRUCTURES IN THE FIELD PRIOR TO POUR.

20. WORK IN PUBLIC RIGHT-OF-WAY SHOWN AND WORK BY OTHERS FOR REFERENCE ONLY. VERIFY EXISTING CONDITIONS AND NOTIFY ARCHITECT OF ANY DISCREPANCIES.

21. PROVIDE MOCK-UPS FOR APPROVAL BY ARCHITECT FOR ALL PAVING, WALLS, STAIRS, LIGHTING ELEMENTS, CUSTOM SITE FURNISHINGS, AND STRUCTURES AS NOTED IN SPECS.

22. ALL STRUCTURAL SITE ELEMENTS SUCH AS WALLS, FOOTINGS, SUB-SLABS, RAILINGS, CANOPY STRUCTURES, ETC. ARE TO BE ENGINEERED BASED ON THESE DRAWINGS AND APPROVED BY STRUCTURAL ENGINEER.

23. ALL DRAINAGE ELEMENTS SUCH AS PIPING, DRAINS AND INLETS ARE TO BE ENGINEERED BASED ON THESE DRAWINGS AND APPROVED BY CIVIL ENGINEER.

26. ALL ELEMENTS NOTED AS 'R' RADIUS, SHALL BE TRUE ARCS. SEGMENTED FORMS WILL NOT BE ACCEPTED. ALL RADIAL FORMS SHALL BE CONCENTRIC AND DERIVED FROM ONE CENTER POINT.

ABBREVIATIONS

@	AT	MFR	MANUFACTURER
AC	ASPHALTIC CONCRETE	MIN	MINIMUM
AD	AREA DRAIN	NIC	NOT IN CONTRACT
AG	AGGREGATE PAVING	NTSDOC	NOT TO SCALEON CENTER
AGW	AGGREGATE AT WATER	OCEW	ON CENTER EACH WAY
AM	AGGREGATE MULCH	OD	OUTSIDE DIAMETER
AP	ASPHALT PAVEMENT	OP	OVERFLOW PIPE
B&B	BALL AND BURLAP	OPP	OPPOSITE
BC	BOTTOM OF CURB	PA	PLANTING AREA
BD	BOLLARD	PC	POINT OF CURVATURE
BE	BUILDING ENTRY	PD	PLANTING DRAIN
BFP	BOTTOM OF FENCE POST	PED	PEDESTRIAN
BLDG	BUILDING	PERF	PERFORATED
BOC	BACK OF CURB	POB	POINT OF BEGINNING
BN	BENCH	POC	POINT OF CONNECTION
BP	BRICK PAVEMENT	PS	PILE SUPPORT
BW	BOTTOM OF WALL	PT	POINT OF TANGENCY
CAL	CALIPER	PVMT	PAVEMENT
CB	CATCH BASIN	R	RADIUS
CC	CONCRETE CURB	RB	ROOT BARRIER
CH	CONCRETE HEADER	RIM	RIM ELEVATION
CJ	CONTROL JOINT	ROW	RIGHT OF WAY
CL	CENTERLINE	S	SLOPE
CLR	CLEARANCE	SA	STABILIZED AGGREGATE PAVING
CO	CLEANOUT	SAD	SEE ARCHITECTURAL DRAWINGS
COL	COLUMN	SCD	SEE CIVIL DRAWINGS
COJ	CONSTRUCTION JOINT	SD	SLOT DRAIN
CONC	CONCRETE	SED	SEE ELECTRICAL DRAWINGS
CONT	CONTINUOUS	SGB	SUBGRADE GRADE BREAK
CP	CONCRETE PAVEMENT	SGS	SUBGRADE SUBSURFACE
CR	CURB RAMP	SH	STEEL HEADER
DIA	DIAMETER	SIM	SIMILAR
DM	DETENTION MANHOLE	SJ	SCORE JOINT
DN	DOWN	SPD	SEE PLUMBING DRAWINGS
DW	DETECTABLE WARNING	SS	STAINLESS STEEL
DWG	DRAWING	SSD	SEE STRUCTURAL DRAWINGS
EA	EACH	STD	STANDARD
EF	EACH FACE	STSL	STRUCTURAL SLAB
EJ	EXPANSION JOINT	TA	TOP OF ANGLE
EL	ELEVATION	TB	TOP OF BOLLARD
EP	EDGE OF PAVEMENT	T&B	TOP AND BOTTOM
EQ	EQUAL	TC	TOP OF CURB
EW	EACH WAY	TCJ	TOOLED CONTROL JOINT
EX	EXISTING	TD	TRENCH DRAIN
FCJ	FORMED CONTROL JOINT	TFG	TOP OF FOOTING
FFE	FINISHED FLOOR ELEVATION	TFP	TOP OF FENCE PICKET
FG	FINISH GRADE	TG	TREE GRATE
FH	FIRE HYDRANT	TH	TOP OF HEADER
FL	FLOW LINE	TIHP	TRENCH INVERT HIGH POINT
FOC	FACE OF CURB	TIO	TRENCH INVERT OUTLET
FOW	FACE OF WALL	TL	TRASH RECEPTACLE
FS	FINISH SURFACE	TOC	TOP OF CONCRETE
GALV	GALVANIZED	TP	TOP OF PLINTH
GB	GRADE BREAK	TR	TREE
GJ	GROUT JOINT	TS	TOP OF STAIR
HH	HANDHOLE	TW	TOP OF WALL
HORIZ	HORIZONTAL	TRANS	TRANSVERSE
HP	HIGH POINT	TRB	TOP OF ROOT BALL
HT	HEIGHT	TS	TOP OF STEP
ID	INSIDE DIAMETER	TSP	TOP OF STEEL PLATE
IE	INVERT ELEVATION	TYP	TYPICAL
INV	INVERTED	UDP	UNDERGROUND DRAIN PIPE
LH	LAYOUT LINE OF HEADER	VEH	VEHICULAR
LONGIT	LONGITUDINAL	VERT	VERTICAL
LOW	LIMIT OF WORK	WF	WATER FEATURE
LP	LOW POINT	WFS	WATER FEATURE SLAB
LT	LIGHT POLE	WFT	WATER FEATURE TRENCH
M	MANHOLE	WL	WATER LEVEL
MAX	MAXIMUM	WPM	WATER PROOF MEMBRANE
ME	MATCH EXISTING	WWF	WELDED WIRE FABRIC
		W/	WITH

GRAPHIC LEGEND

PROPERTY LINE

LIMIT OF WORK

MATCHLINE

VEHICULAR ZONE BOUNDARY AT PLAZA

STRUCTURE OVERHANG

STEEL EDGER

EXPANSION JOINT

CONTROL JOINT

CENTERLINE

GRADING CONTOUR

EASEMENT

WORK BY OTHERS

1 / A101 — DETAIL CALLOUT
DETAIL NUMBER
SHEET WHERE IT IS SHOWN

1 / A101 — ENLARGEMENT PLAN
DETAIL NUMBER
SHEET WHERE IT IS SHOWN

1 / A101 — SECTION
DETAIL NUMBER
SHEET WHERE IT IS SHOWN

1 / A101 — ELEVATION
DETAIL NUMBER
SHEET WHERE IT IS SHOWN

12' - 0" — DIMENSION

R.3.00 — RADIUS

? — KEYNOTE

MATERIALS

CONCRETE PAVING TYPE 1
FINISH: LIGHT BROOM
COLOR: NONE

CONCRETE PAVING TYPE 2
2FT X 2FT GRID
FINISH: HEAVY BROOM
DAVIS COLOR: DARK GRAY 8084

CONCRETE PAVING TYPE 3
FINISH: SMOOTH
DAVIS COLOR: DARK GRAY 8084

DECOMPOSED GRANITE
COLOR: GRAY

TACTILE WARNING STRIP
SEE SHEET 2 SHEET L504 FOR DETAIL

ANGULAR AGREGATE
SIZE:1/2"-3/4"
COLOR: GREY

ANGULAR AGREGATE
SIZE:1/2"-3/4"
COLOR: RED

WOOD CHIP MULCH

SOD

ROCK WALL 01

CONCRETE SCREEN WALL

CONCRETE SIGNAGE WALL

WROUGHT IRON FENCE

PLANTING SYMBOLS

DCT	Lemon Dalea	*Dalea capitata*
DSP	Hardy Ice Plant	*Delosperma cooperi*
ERB	Gopher Plant	*Euphorbia rigida biglandulosa*
MCS	Pink Hair Grass	*Muhlenbergia capillaris*
NTS	Mexican Feather Grass	*Nassella tenuissima*
PSR	Puple Fountain Grass	*Pennisetum setaceum 'Rubrum'*
PVG	Switchgrass	*Panicum Virgatum*
SSM	Baby Sage	*Salvia sylvestris 'Midnight'*
CDS	Palo Verde Thornless 'Desert Museum'	*Cercidium x 'Desert Museum'*
GTS	Honey Locust Var. Thornless	*Gleditsia triacanthos inermis*
PCH	Chinese Pistache Tree	*Pristachia chinensis*
PMX	Mexican Plum	*Prunus mexicana*

PLANTING SCHEDULE

SYMBOL	COMMON NAME	LATIN NAME	SIZE	COUNT
GROUNDCOVER				
DCT	Lemon Dalea	Dalea capitata	5 GAL	386
DSP	Hardy Ice Plant	Delosperma cooperi	1 GAL	195
SHADE TREE				
CDS	Palo Verde Thornless Desert Museum	Cercidium x 'Desert Museum'	2" CAL	18
GTS	Honey Locust Thorness Var	Gleditsia triacanthos inermis	2" CAL	35
PCH	Chinese Pistache Tree	Pistacia chinensis	2" CAL	76
PMX	Mexican Plum	Prunus mexicana	2" CAL	8
SHRUB				
ERB	Gopher Plant	Euphorbia rigida biglandulosa	5 GAL	57
MCS	Pink Hair Grass	Muhlenbergia capillaris	1 GAL	325
NTS	Mexican Feather Grass	Nassella tenuissima	1 GAL	528
PSR	Purple Fountain Grass	Pennisetum setaceum 'Rubrum'	1 GAL	261
PVG	Switchgrass	Panicum virgatum	1 GAL	757
SSM	Baby Sage	Salvia sylvestris 'May Night'	5 GAL	432
Grand total: 3078				3078

LANDSCAPE AREA CALCULATIONS

REQUIRED		PROVIDED	
		PARKING STRUCTURE BUILDING FOORPRINT	46,751.44 SQ FT
		TRANSFER BUILDING FOOTPRINT	8,512.24 SQ FT
		BUSWAY ROAD	90,108.24 SQ FT
		TOTAL BUILDING AREA	145,371.92 SQ FT
		LOT AREA	269,038.25 SQ FT
LANDSCAPE AREA REQUIRED	20,177.86 SQ FT	LANDSCAPE AREA	123,666.00 SQ FT
STREET STREES	123	STREET STREES	137
SHRUBS	2460	SHRUBS	2359
GROUND COVER	1230	GROUND COVER	581
STREET TREE SPACING	AT 25' AND 50'	STREET TREE SPACING (EXCEPT ORNAMENTAL TREES AT 15')	AT 25'
TOTAL PERMEABLE AREA	57,444 SQ FT	SOD	19,782 SQ FT (34%)

RNL
1050 17th STREET
SUITE A200
DENVER, CO 80265
303 295 1717 t
303 292 0845 f

REFERENCES – BENCHMARKS

DATE	REVISIONS	BY

ARCHITECT'S SEAL

SCALE
HOR: SHOWN
VER: SHOWN

DATE	2/24/16
DESIGN BY	Designer
DRAWN BY	Author
CHKD BY	Checker
APPD BY	Approver

100% CONSTRUCTION DOCUMENTS

PROJECT NAME

NORTHGATE TRANSFER CENTER

EL PASO, TEXAS.

CITY OF EL PASO

CAPITAL IMPROVEMENT DEPARTMENT

SHEET TITLE

NOTES, LEGENDS, AND FINISH SCHEDULE

SHEET

L001

100% CONSTRUCTION DOCUMENTS

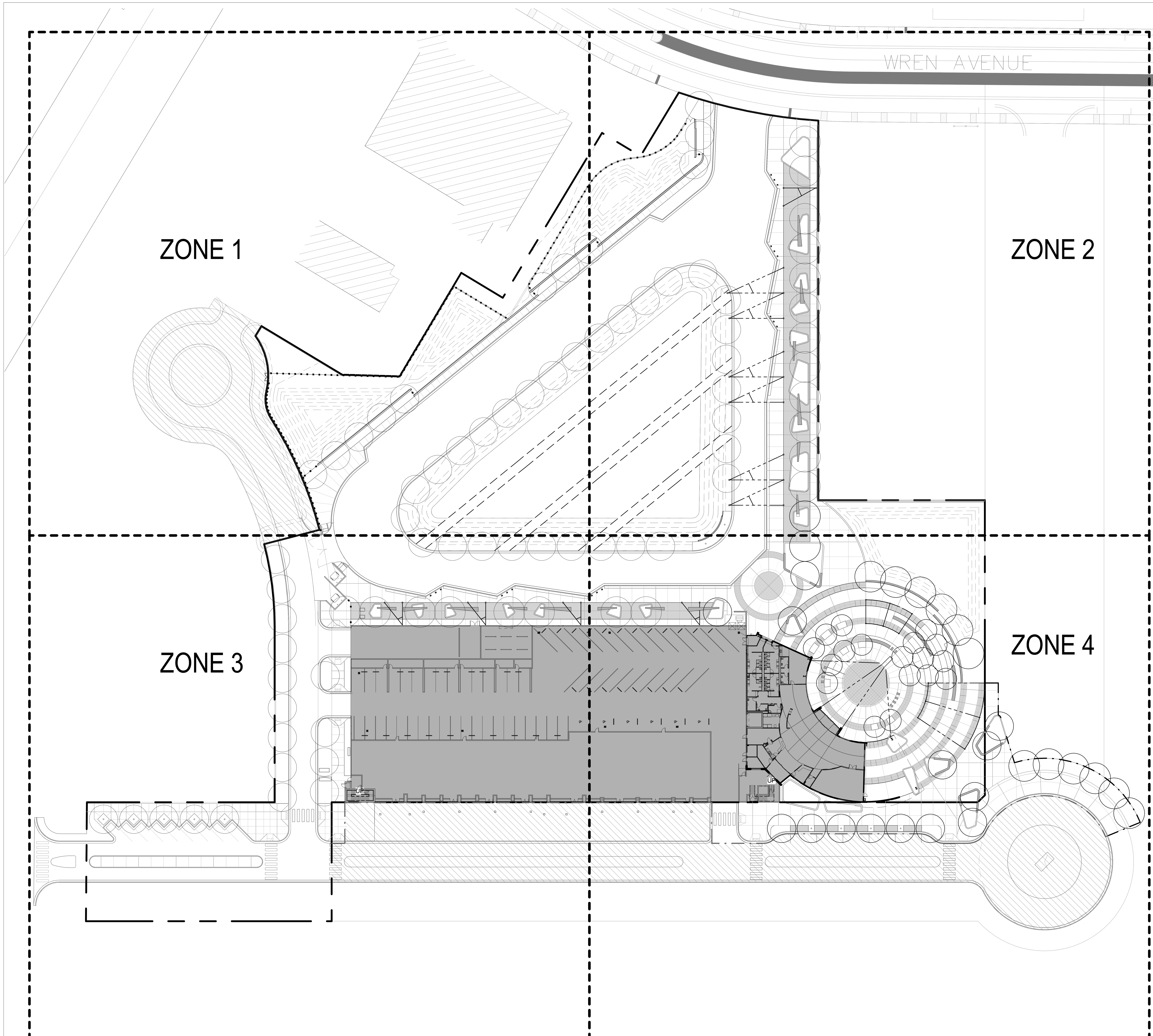

RNL
1050 17th STREET
SUITE A200
DENVER, CO 80265
303 295 1717 t
303 292 0845 f

100% CONSTRUCTION DOCUMENTS

REFERENCES – BENCHMARKS

DATE | REVISIONS | BY

ARCHITECTS SEAL

SCALE
HOR: SHOWN
VER: SHOWN

PROJECT NAME

NORTHGATE TRANSFER CENTER

EL PASO, TEXAS.

CITY OF EL PASO

CAPITAL IMPROVEMENT DEPARTMENT

SHEET TITLE

OVERALL SITE PLAN

SHEET

L100

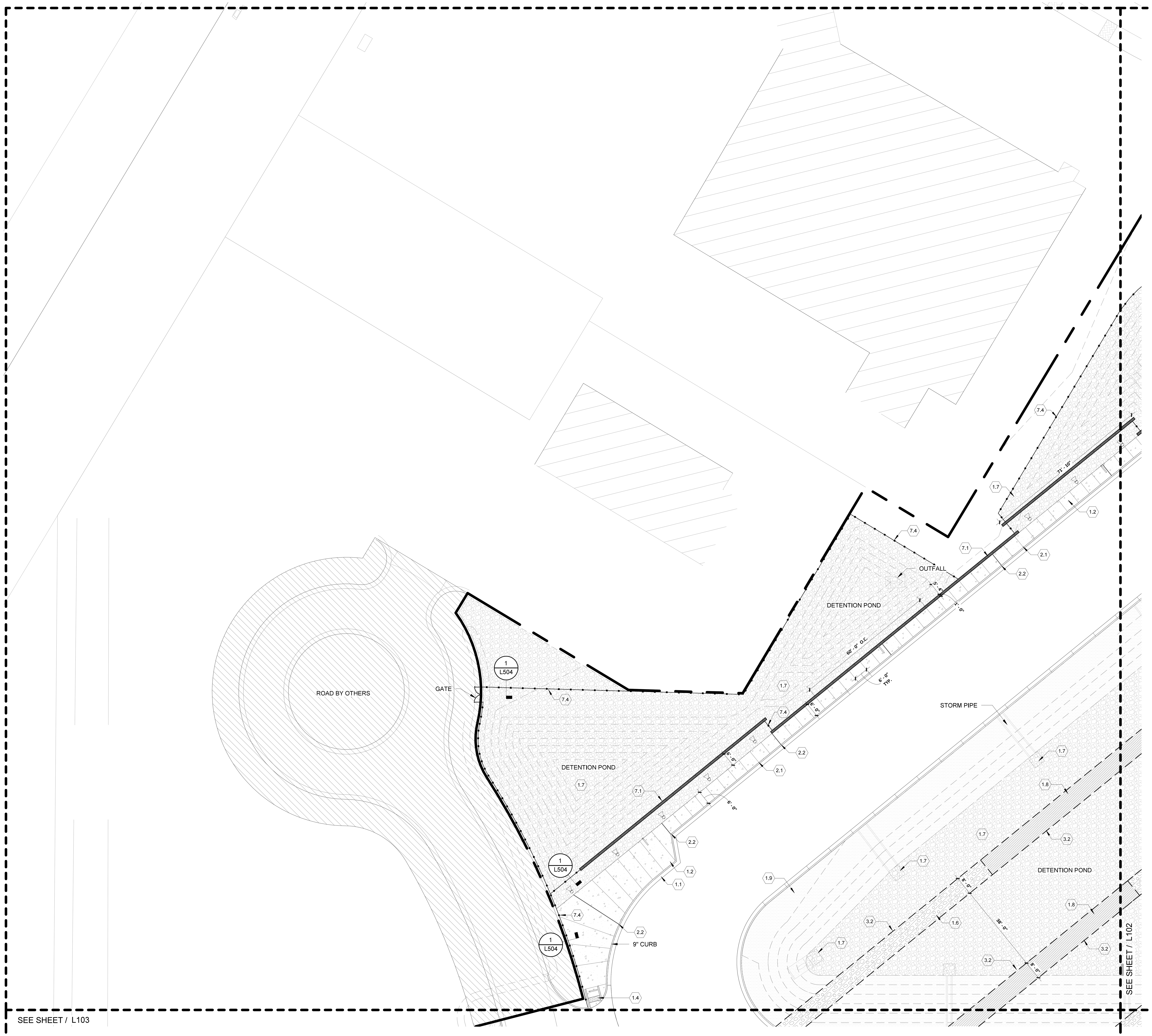

VICINITY MAP

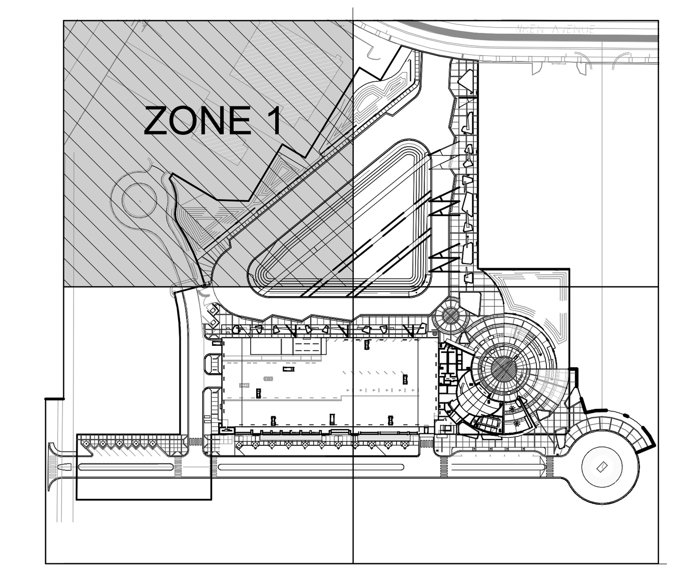

GRAPHIC LEGEND

- PROPERTY LINE
- LIMIT OF WORK
- MATCHLINE
- VEHICULAR ZONE BOUNDARY AT PLAZA
- GRADING CONTOUR
- CENTERLINE
- WORK BY OTHERS
- 1 / A101 — DETAIL CALLOUT, DETAIL NUMBER, SHEET WHERE IT IS SHOWN
- 1 / A101 — ENLARGEMENT PLAN, DETAIL NUMBER, SHEET WHERE IT IS SHOWN
- ? — KEYNOTE

MATERIAL LEGEND

SYMBOL/HATCH	PLAN NOTE	DESCRIPTION
	1.1	CONCRETE CURB & GUTTER
	1.2	CONCRETE TYPE 1
	1.3	CONCRETE TYPE 2
	1.4	TACTILE WARNING STRIP
	1.5	DECOMPOSED GRANITE
	1.6	RED ANGULAR AGREGATE
	1.7	GRAY ANGULAR AGGREGATE
	1.8	WOOD CHIP MULCH
	1.9	SOD
	2.0	VEHICULAR PAVEMENT ZONE
	2.1	CONTROL JOINT
	2.2	EXPANISON JOINT
SEE PLAN NOTE NUMBER	3.1	RAMP
	3.2	STEEL EDGER
	3.3	CUSTOM TRENCH DRAIN
T1	5.1	TRASH RECEPTACLE
	5.2	BOLLARD
	5.3	LIGHTING (SEE ELECTRICAL)
	5.4	FLAG POLE
	5.5	TREE GRATE
	5.6	SHADE STRUCTURE COLUMN
SEE PLAN NOTE NUMBER	6.1	BENCH TYPE A
SEE PLAN NOTE NUMBER	6.2	BENCH TYPE B
SEE PLAN NOTE NUMBER	6.3	BENCH TYPE C
SEE PLAN NOTE NUMBER	6.4	BENCH TYPE D
SEE PLAN NOTE NUMBER	6.5	BENCH TYPE E
SEE PLAN NOTE NUMBER	6.6	BENCH TYPE F
SEE PLAN NOTE NUMBER	6.7	BENCH TYPE G
SEE PLAN NOTE NUMBER	6.8	BENCH TYPE H
	7.1	ROCK WALL
	7.2	CONCRETE SCREEN WALL
	7.3	SIGNAGE WALL
	7.4	WROUGHT IRON RAILING

NOTES

SEE ELECTRICAL FOR LIGHT STANDARDS AND GROUND MOUNTED FIXTURES

SEE SHEET L100 FOR DETAILED MATERIALS SPECIFICATIONS

NORTH

SCALE 1"= 20'-0" (0, 10', 20', 40')

RNL
1050 17th STREET
SUITE A200
DENVER, CO 80265
303 295 1717 t
303 292 0845 f

100% CONSTRUCTION DOCUMENTS

REFERENCES -- BENCHMARKS

DATE	REVISIONS	BY

ARCHITECTS SEAL

REGISTERED LANDSCAPE ARCHITECT STEVEN WILENSKY 2615 STATE OF TEXAS
02/04/2016
THIS SHEET HAS BEEN SIGNED, SEALED, AND DATED ELECTRONICALLY
100% CONSTRUCTION DOCUMENTS

SCALE
HOR: SHOWN
VER: SHOWN

DATE 02/04/16
DESIGN BY Designer
DRAWN BY Author
CHKD. BY Checker
APPD. BY Approver

PROJECT NAME

NORTHGATE TRANSFER CENTER

EL PASO, TEXAS.

CITY OF EL PASO

CAPITAL IMPROVEMENT DEPARTMENT

THE CITY OF EL PASO TEXAS

SHEET TITLE

SITE LAYOUT PLAN
ZONE 1

SHEET
L101

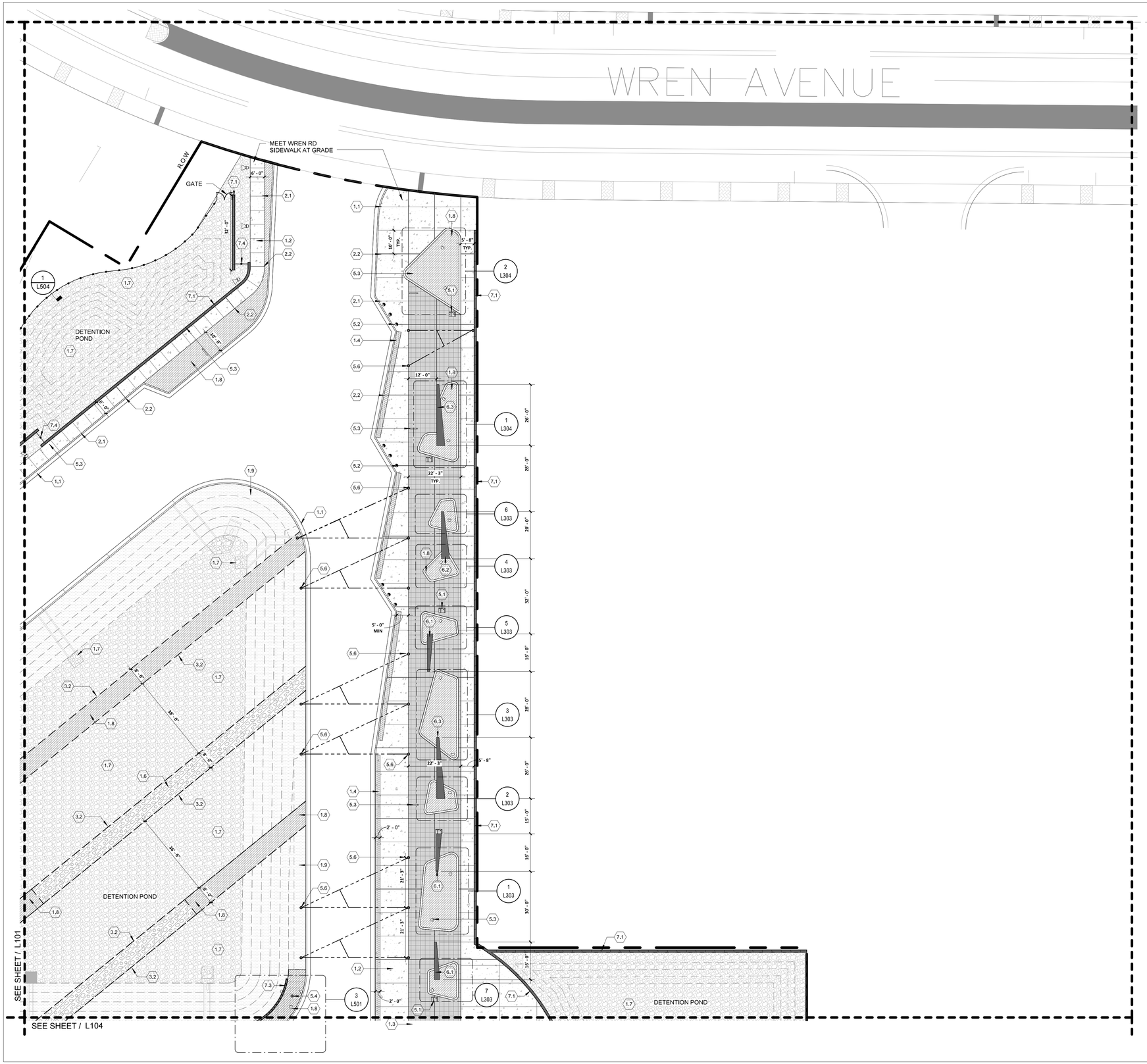

VICINITY MAP

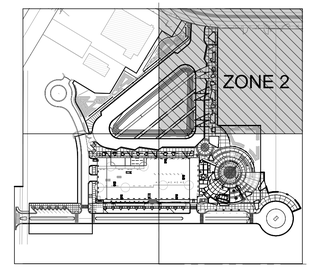

GRAPHIC LEGEND

- PROPERTY LINE
- LIMIT OF WORK
- MATCHLINE
- VEHICULAR ZONE BOUNDARY AT PLAZA
- GRADING CONTOUR
- CENTERLINE
- WORK BY OTHERS
- DETAIL CALLOUT (1 / A101) — DETAIL NUMBER, SHEET WHERE IT IS SHOWN
- ENLARGEMENT PLAN (1 / A101) — DETAIL NUMBER, SHEET WHERE IT IS SHOWN
- KEYNOTE (?)

MATERIAL LEGEND

SYMBOL/HATCH	PLAN NOTE	DESCRIPTION
	1.1	CONCRETE CURB & GUTTER
	1.2	CONCRETE TYPE 1
	1.3	CONCRETE TYPE 2
	1.4	TACTILE WARNING STRIP
	1.5	DECOMPOSED GRANITE
	1.6	RED ANGULAR AGREGATE
	1.7	GRAY ANGULAR AGGREGATE
	1.8	WOOD CHIP MULCH
	1.9	SOD
	2.0	VEHICULAR PAVEMENT ZONE
	2.1	CONTROL JOINT
	2.2	EXPANISON JOINT
SEE PLAN NOTE NUMBER	3.1	RAMP
	3.2	STEEL EDGER
	3.3	CUSTOM TRENCH DRAIN
T1	5.1	TRASH RECEPTACLE
	5.2	BOLLARD
	5.3	LIGHTING (SEE ELECTRICAL)
	5.4	FLAG POLE
	5.5	TREE GRATE
	5.6	SHADE STRUCTURE COLUMN
SEE PLAN NOTE NUMBER	6.1	BENCH TYPE A
SEE PLAN NOTE NUMBER	6.2	BENCH TYPE B
SEE PLAN NOTE NUMBER	6.3	BENCH TYPE C
SEE PLAN NOTE NUMBER	6.4	BENCH TYPE D
SEE PLAN NOTE NUMBER	6.5	BENCH TYPE E
SEE PLAN NOTE NUMBER	6.6	BENCH TYPE F
SEE PLAN NOTE NUMBER	6.7	BENCH TYPE G
SEE PLAN NOTE NUMBER	6.8	BENCH TYPE H
	7.1	ROCK WALL
	7.2	CONCRETE SCREEN WALL
	7.3	SIGNAGE WALL
	7.4	WROUGHT IRON RAILING

NOTES

SEE ELECTRICAL FOR LIGHT STANDARDS AND GROUND MOUNTED FIXTURES

SEE SHEET L100 FOR DETAILED MATERIALS SPECIFICATIONS

NORTH" 0 10' 20' 40' SCALE 1"= 20'-0"

RNL
1050 17th STREET
SUITE A200
DENVER, CO 80265
303 295 1717 t
303 292 0845 f

100% CONSTRUCTION DOCUMENTS

REFERENCES – BENCHMARKS

DATE	REVISIONS	BY

ARCHITECT'S SEAL

100% CONSTRUCTION DOCUMENTS

SCALE
HOR: SHOWN
VER: SHOWN

DATE 02/04/15
DESIGN BY Designer
DRAWN BY Author
CHKD BY Checker
APPD. BY Approver

PROJECT NAME
NORTHGATE TRANSFER CENTER
EL PASO, TEXAS.

CITY OF EL PASO
CAPITAL IMPROVEMENT DEPARTMENT

SHEET TITLE
SITE LAYOUT PLAN
ZONE 2

SHEET
L102

SEE SHEET / L101

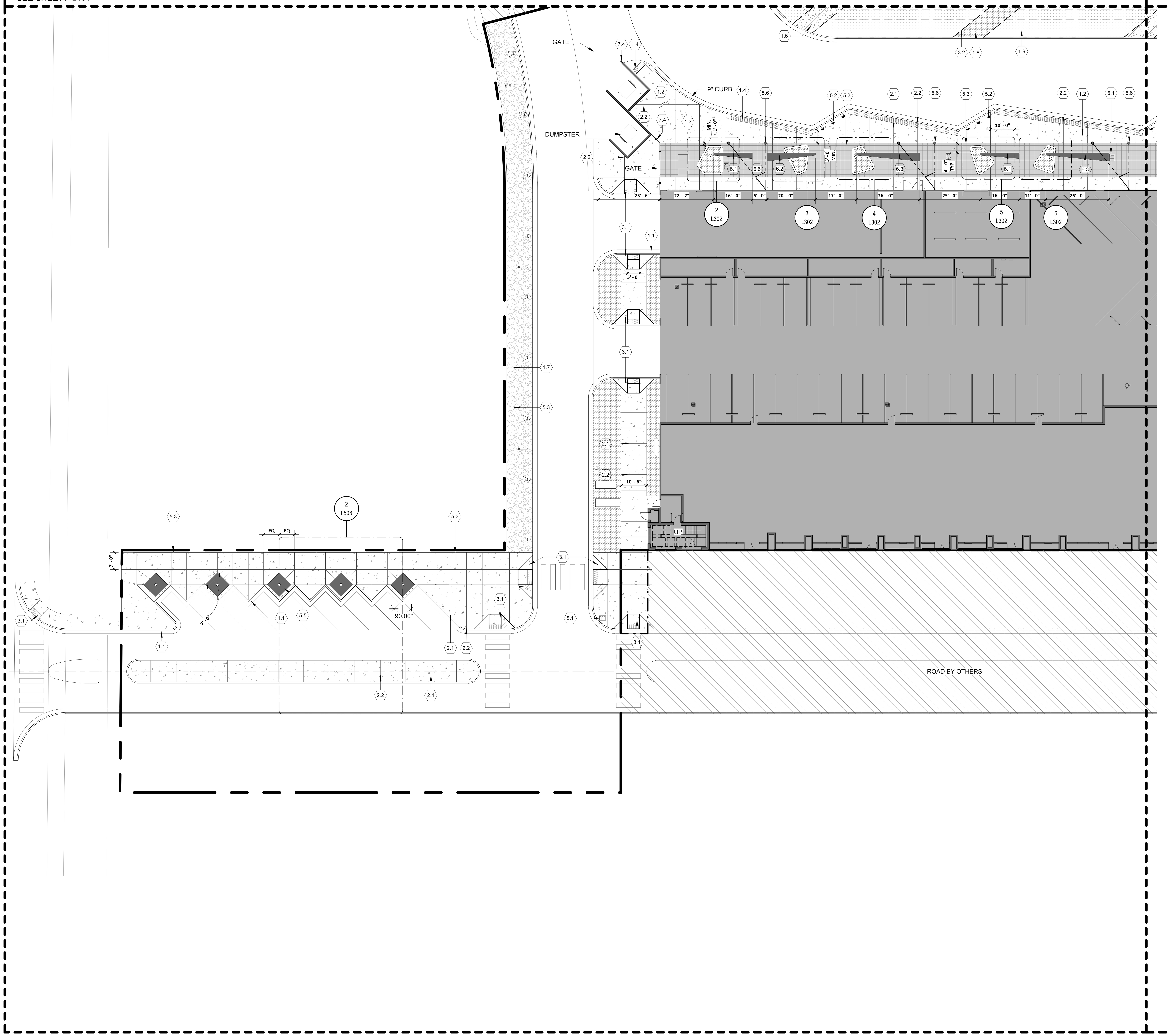

VICINITY MAP

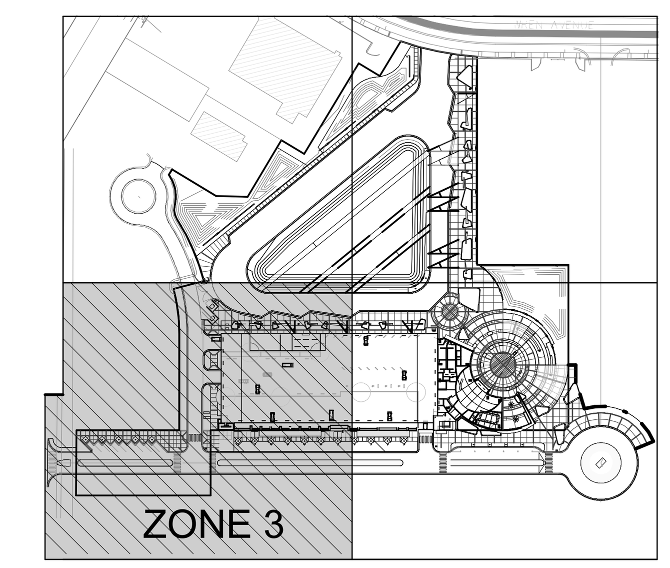

GRAPHIC LEGEND

- PROPERTY LINE
- LIMIT OF WORK
- MATCHLINE
- VEHICULAR ZONE BOUNDARY AT PLAZA
- GRADING CONTOUR
- CENTERLINE
- WORK BY OTHERS
- 1 / A101 — DETAIL CALLOUT, DETAIL NUMBER, SHEET WHERE IT IS SHOWN
- 1 / A101 — ENLARGEMENT PLAN, DETAIL NUMBER, SHEET WHERE IT IS SHOWN
- ? — KEYNOTE

MATERIAL LEGEND

SYMBOL/HATCH	PLAN NOTE	DESCRIPTION
	1.1	CONCRETE CURB & GUTTER
	1.2	CONCRETE TYPE 1
	1.3	CONCRETE TYPE 2
	1.4	TACTILE WARNING STRIP
	1.5	DECOMPOSED GRANITE
	1.6	RED ANGULAR AGREGATE
	1.7	GRAY ANGULAR AGGREGATE
	1.8	WOOD CHIP MULCH
	1.9	SOD
	2.0	VEHICULAR PAVEMENT ZONE
	2.1	CONTROL JOINT
	2.2	EXPANSION JOINT
SEE PLAN NOTE NUMBER	3.1	RAMP
	3.2	STEEL EDGER
	3.3	CUSTOM TRENCH DRAIN
T1	5.1	TRASH RECEPTACLE
	5.2	BOLLARD
	5.3	LIGHTING (SEE ELECTRICAL)
	5.4	FLAG POLE
	5.5	TREE GRATE
	5.6	SHADE STRUCTURE COLUMN
SEE PLAN NOTE NUMBER	6.1	BENCH TYPE A
SEE PLAN NOTE NUMBER	6.2	BENCH TYPE B
SEE PLAN NOTE NUMBER	6.3	BENCH TYPE C
SEE PLAN NOTE NUMBER	6.4	BENCH TYPE D
SEE PLAN NOTE NUMBER	6.5	BENCH TYPE E
SEE PLAN NOTE NUMBER	6.6	BENCH TYPE F
SEE PLAN NOTE NUMBER	6.7	BENCH TYPE G
SEE PLAN NOTE NUMBER	6.8	BENCH TYPE H
	7.1	ROCK WALL
	7.2	CONCRETE SCREEN WALL
	7.3	SIGNAGE WALL
	7.4	WROUGHT IRON RAILING

NOTES

SEE ELECTRICAL FOR LIGHT STANDARDS AND GROUND MOUNTED FIXTURES

SEE SHEET L100 FOR DETAILED MATERIALS SPECIFICATIONS

NORTH

0 10' 20' 40'
SCALE 1"= 20'-0"

RNL
1050 17th STREET
SUITE A200
DENVER, CO 80265
303 295 1717 t
303 292 0845 f

100% CONSTRUCTION DOCUMENTS

REFERENCES – BENCHMARKS

REVISIONS | DATE | BY

ARCHITECTS SEAL

SCALE — HOR: SHOWN; VER: SHOWN

DATE | DESIGN BY | DRAWN BY | CHKD. BY | APPD. BY

PROJECT NAME

NORTHGATE TRANSFER CENTER

EL PASO, TEXAS.

CITY OF EL PASO

CAPITAL IMPROVEMENT DEPARTMENT

THE CITY OF EL PASO TEXAS

SHEET TITLE

SITE LAYOUT PLAN
ZONE 3

SHEET

L103

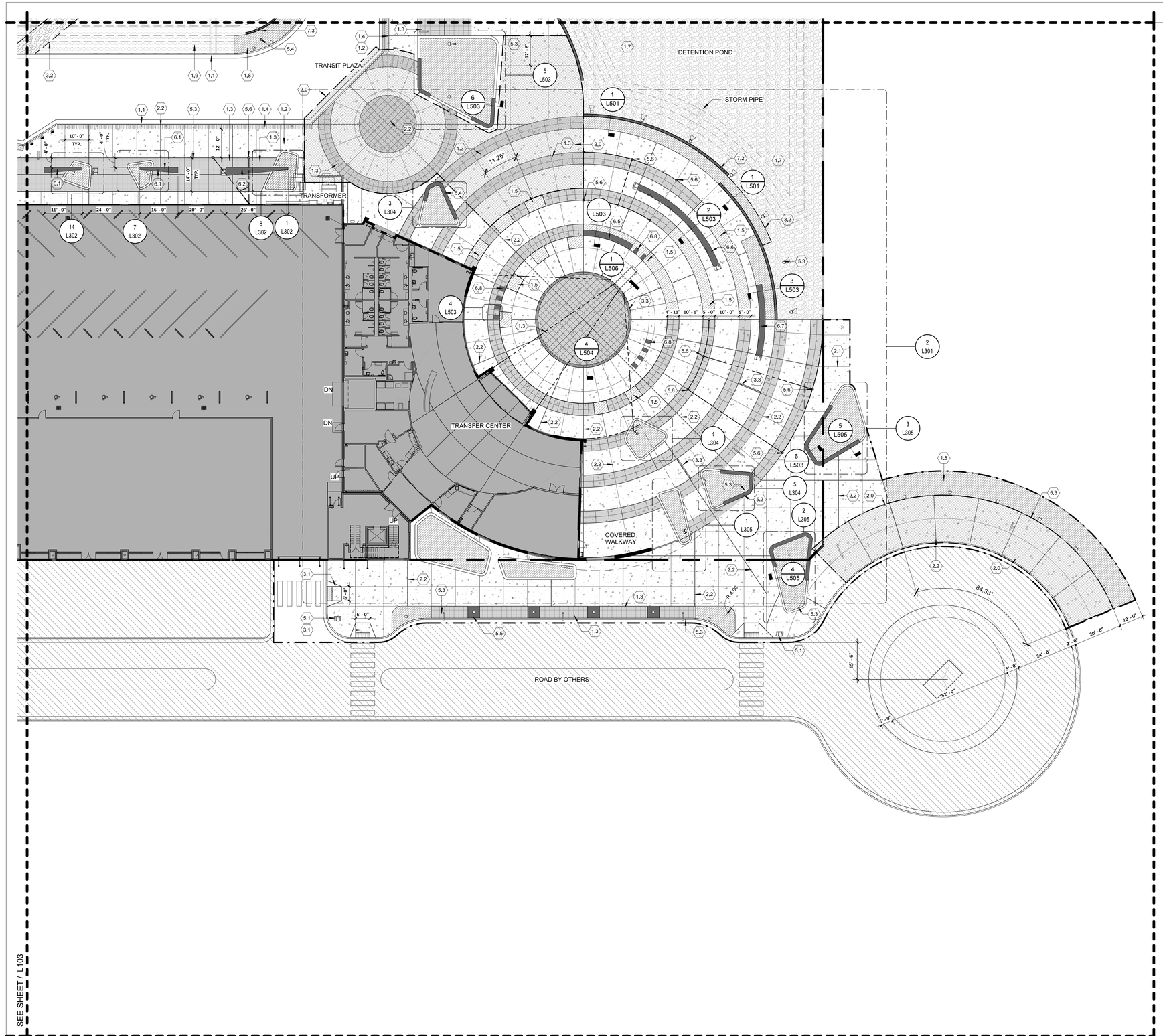

VICINITY MAP

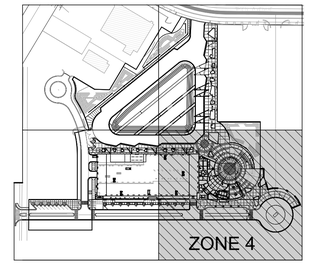

GRAPHIC LEGEND

- PROPERTY LINE
- LIMIT OF WORK
- MATCHLINE
- VEHICULAR ZONE BOUNDARY AT PLAZA
- GRADING CONTOUR
- CENTERLINE
- WORK BY OTHERS
- DETAIL CALLOUT (1 / A101) — DETAIL NUMBER, SHEET WHERE IT IS SHOWN
- ENLARGEMENT PLAN (1 / A101) — DETAIL NUMBER, SHEET WHERE IT IS SHOWN
- KEYNOTE (?)

MATERIAL LEGEND

SYMBOL/HATCH	PLAN NOTE	DESCRIPTION
	1.1	CONCRETE CURB & GUTTER
	1.2	CONCRETE TYPE 1
	1.3	CONCRETE TYPE 2
	1.4	TACTILE WARNING STRIP
	1.5	DECOMPOSED GRANITE
	1.6	RED ANGULAR AGREGATE
	1.7	GRAY ANGULAR AGGREGATE
	1.8	WOOD CHIP MULCH
	1.9	SOD
	2.0	VEHICULAR PAVEMENT ZONE
	2.1	CONTROL JOINT
	2.2	EXPANISON JOINT
SEE PLAN NOTE NUMBER	3.1	RAMP
	3.2	STEEL EDGER
	3.3	CUSTOM TRENCH DRAIN
T1	5.1	TRASH RECEPTACLE
	5.2	BOLLARD
	5.3	LIGHTING (SEE ELECTRICAL)
	5.4	FLAG POLE
	5.5	TREE GRATE
	5.6	SHADE STRUCTURE COLUMN
SEE PLAN NOTE NUMBER	6.1	BENCH TYPE A
SEE PLAN NOTE NUMBER	6.2	BENCH TYPE B
SEE PLAN NOTE NUMBER	6.3	BENCH TYPE C
SEE PLAN NOTE NUMBER	6.4	BENCH TYPE D
SEE PLAN NOTE NUMBER	6.5	BENCH TYPE E
SEE PLAN NOTE NUMBER	6.6	BENCH TYPE F
SEE PLAN NOTE NUMBER	6.7	BENCH TYPE G
SEE PLAN NOTE NUMBER	6.8	BENCH TYPE H
	7.1	ROCK WALL
	7.2	CONCRETE SCREEN WALL
	7.3	SIGNAGE WALL
	7.4	WROUGHT IRON RAILING

NOTES

SEE ELECTRICAL FOR LIGHT STANDARDS AND GROUND MOUNTED FIXTURES

SEE SHEET L100 FOR DETAILED MATERIALS SPECIFICATIONS

NORTH" SCALE 1"= 20'-0" (0, 10', 20', 40')

RNL
1050 17th STREET
SUITE A200
DENVER, CO 80265
303 295 1717 t
303 292 0845 f

100% CONSTRUCTION DOCUMENTS

REFERENCES – BENCHMARKS

BY	REVISIONS	DATE

ARCHITECT'S SEAL

RNL DESIGN
1050 17th STREET, SUITE A200
DENVER, CO 80265
303 295 1717

100% CONSTRUCTION DOCUMENTS

SCALE
HOR: SHOWN
VER: SHOWN

DATE 03/24/15
DESIGN BY Designer
DRAWN BY Author
CHKD BY Principal
APPD BY Approver

PROJECT NAME
NORTHGATE TRANSFER CENTER
EL PASO, TEXAS.

CITY OF EL PASO
CAPITAL IMPROVEMENT DEPARTMENT

SHEET TITLE
SITE LAYOUT PLAN
ZONE 4

SHEET
L104

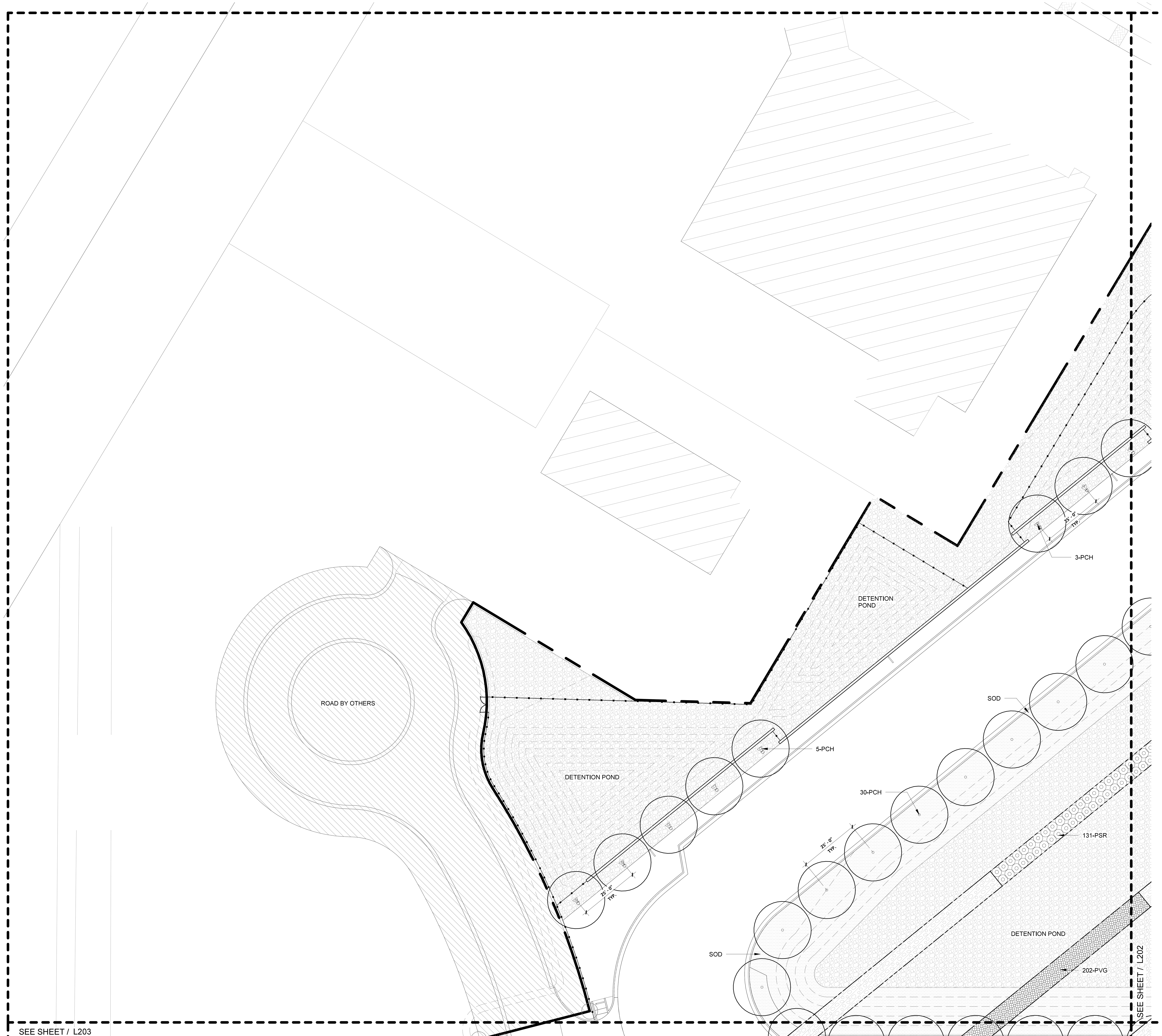

VICINITY MAP

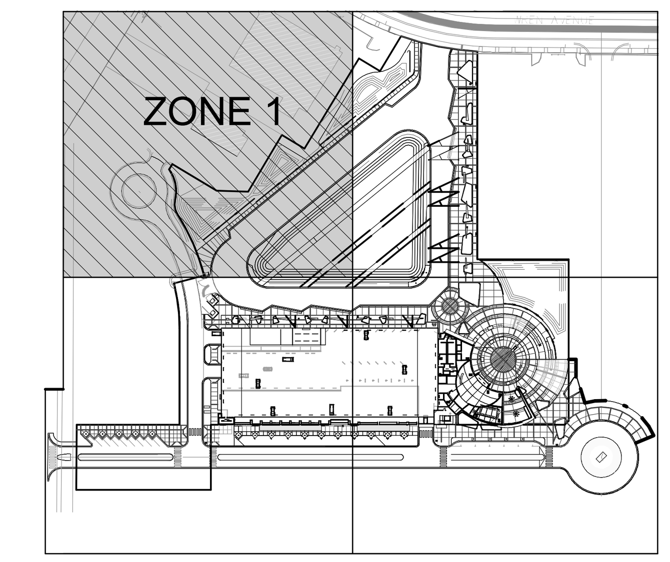

GRAPHIC LEGEND

- PROPERTY LINE
- LIMIT OF WORK
- MATCHLINE
- VEHICULAR ZONE BOUNDARY AT PLAZA
- EASEMENT
- CENTERLINE
- WORK BY OTHERS

MATERIAL LEGEND

SYMBOL/HATCH

- DECOMPOSED GRANITE
- RED ANGULAR AGGREGATE
- GRAY ANGULAR AGREGATE
- SEED
- CONTROL JOINT
- EXPANSION JOINT
- STEEL EDGER
- TRASH RECEPTACLE
- CONCRETE BOLLARD
- LIGHT POLE
- FLAG POLE
- TREE GRATE
- SHADE STRUCTURE COLUMN

PLANTING SCHEDULE

SYMBOL	COMMON NAME	LATIN NAME	SIZE	COUNT
GROUNDCOVER				
DCT	Lemon Dalea	Dalea capitata	5 GAL	386
DSP	Hardy Ice Plant	Delosperma cooperi	1 GAL	195
SHADE TREE				
CDS	Palo Verde Thornless Desert Museum	Cercidium x 'Desert Museum'	2" CAL	18
GTS	Honey Locust Thorness Var	Gleditsia triacanthos inermis	2" CAL	35
PCH	Chinese Pistache Tree	Pistacia chinensis	2" CAL	76
PMX	Mexican Plum	Prunus mexicana	2" CAL	8
SHRUB				
ERB	Gopher Plant	Euphorbia rigida biglandulosa	5 GAL	57
MCS	Pink Hair Grass	Muhlenbergia capillaris	1 GAL	325
NTS	Mexican Feather Grass	Nassella tenuissima	1 GAL	528
PSR	Purple Fountain Grass	Pennisetum setaceum 'Rubrum'	1 GAL	261
PVG	Switchgrass	Panicum virgatum	1 GAL	757
SSM	Baby Sage	Salvia sylvestris 'May Night'	5 GAL	432
Grand total: 3078				3078

RNL
1050 17th STREET
SUITE A200
DENVER, CO 80265
303 295 1717 t
303 292 0845 f

100% CONSTRUCTION DOCUMENTS

REFERENCES -- BENCHMARKS

DATE	REVISIONS	BY

ARCHITECTS SEAL

STEVEN WILENSKY REGISTERED LANDSCAPE ARCHITECT 2615 STATE OF TEXAS

02/04/2016

THIS SHEET HAS BEEN SIGNED, SEALED, AND DATED ELECTRONICALLY

100% CONSTRUCTION DOCUMENTS

SCALE
HOR: SHOWN
VER: SHOWN

DATE 02/04/16
DESIGN BY Designer
DRAWN BY Author
CHKD. BY Checker
APPD. BY Approver

PROJECT NAME

NORTHGATE TRANSFER CENTER

EL PASO, TEXAS.

CITY OF EL PASO

CAPITAL IMPROVEMENT DEPARTMENT

THE CITY OF EL PASO TEXAS

SHEET TITLE

SITE PLANTING PLAN ZONE 1

SHEET

L201

VICINITY MAP

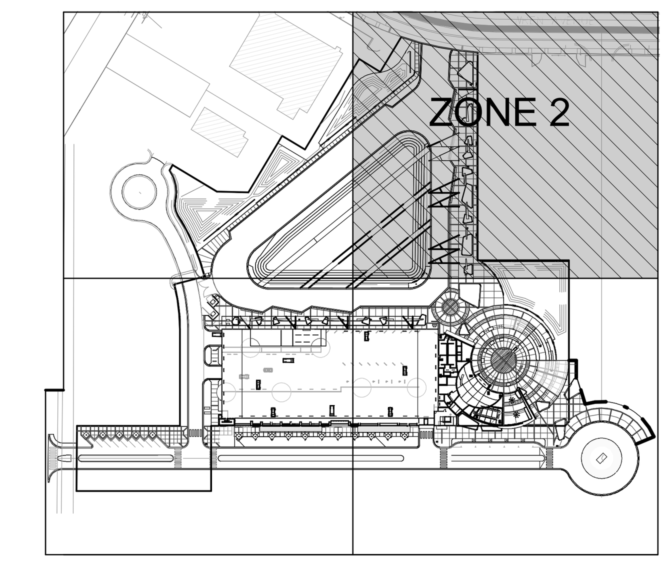

GRAPHIC LEGEND

- PROPERTY LINE
- LIMIT OF WORK
- MATCHLINE
- VEHICULAR ZONE BOUNDARY AT PLAZA
- EASEMENT
- CENTERLINE
- WORK BY OTHERS

MATERIAL LEGEND

SYMBOL/HATCH

- DECOMPOSED GRANITE
- RED ANGULAR AGGREGATE
- GRAY ANGULAR AGREGATE
- SEED
- CONTROL JOINT
- EXPANSION JOINT
- STEEL EDGER
- TRASH RECEPTACLE
- CONCRETE BOLLARD
- LIGHT POLE
- FLAG POLE
- TREE GRATE
- SHADE STRUCTURE COLUMN

PLANTING SCHEDULE

SYMBOL	COMMON NAME	LATIN NAME	SIZE	COUNT
GROUNDCOVER				
DCT	Lemon Dalea	Dalea capitata	5 GAL	386
DSP	Hardy Ice Plant	Delosperma cooperi	1 GAL	195
SHADE TREE				
CDS	Palo Verde Thornless Desert Museum	Cercidium x 'Desert Museum'	2" CAL	18
GTS	Honey Locust Thorness Var	Gleditsia triacanthos inermis	2" CAL	35
PCH	Chinese Pistache Tree	Pistacia chinensis	2" CAL	76
PMX	Mexican Plum	Prunus mexicana	2" CAL	8
SHRUB				
ERB	Gopher Plant	Euphorbia rigida biglandulosa	5 GAL	57
MCS	Pink Hair Grass	Muhlenbergia capillaris	1 GAL	325
NTS	Mexican Feather Grass	Nassella tenuissima	1 GAL	528
PSR	Purple Fountain Grass	Pennisetum setaceum 'Rubrum'	1 GAL	261
PVG	Switchgrass	Panicum virgatum	1 GAL	757
SSM	Baby Sage	Salvia sylvestris 'May Night'	5 GAL	432
Grand total: 3078				3078

NORTH

0 10' 20' 40'

SCALE 1"= 20'-0"

RNL
1050 17th STREET
SUITE A200
DENVER, CO 80265
303 295 1717 t
303 292 0845 f

100% CONSTRUCTION DOCUMENTS

REFERENCES – BENCHMARKS

REVISIONS

DATE

ARCHITECTS SEAL

SCALE
HOR: SHOWN
VER: SHOWN

PROJECT NAME

NORTHGATE TRANSFER CENTER

EL PASO, TEXAS.

CITY OF EL PASO

CAPITAL IMPROVEMENT DEPARTMENT

SHEET TITLE

SITE PLANTING PLAN
ZONE 2

SHEET

L202

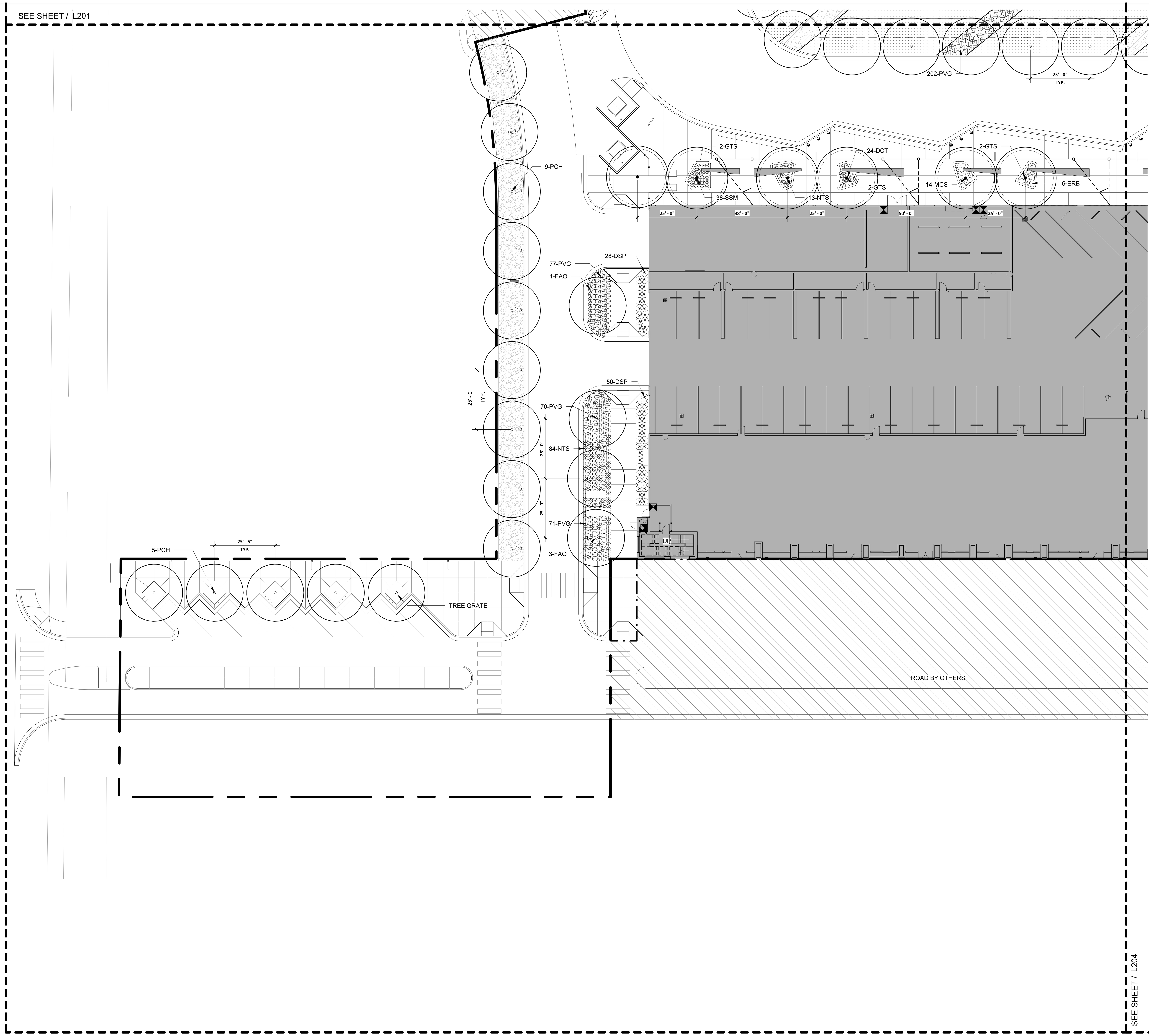

VICINITY MAP

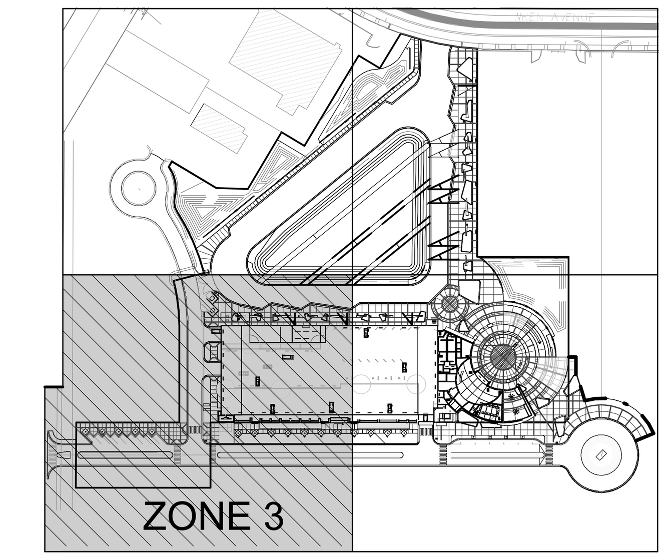

GRAPHIC LEGEND

- PROPERTY LINE
- LIMIT OF WORK
- MATCHLINE
- VEHICULAR ZONE BOUNDARY AT PLAZA
- EASEMENT
- CENTERLINE
- WORK BY OTHERS

MATERIAL LEGEND

SYMBOL/HATCH	
	DECOMPOSED GRANITE
	RED ANGULAR AGGREGATE
	GRAY ANGULAR AGREGATE
	SEED
	CONTROL JOINT
	EXPANSION JOINT
	STEEL EDGER
T1	TRASH RECEPTACLE
	CONCRETE BOLLARD
	LIGHT POLE
	FLAG POLE
	TREE GRATE
	SHADE STRUCTURE COLUMN

PLANTING SCHEDULE

SYMBOL	COMMON NAME	LATIN NAME	SIZE	COUNT
GROUNDCOVER				
DCT	Lemon Dalea	Dalea capitata	5 GAL	386
DSP	Hardy Ice Plant	Delosperma cooperi	1 GAL	195
SHADE TREE				
CDS	Palo Verde Thornless Desert Museum	Cercidium x 'Desert Museum'	2" CAL	18
GTS	Honey Locust Thorness Var	Gleditsia triacanthos inermis	2" CAL	35
PCH	Chinese Pistache Tree	Pistacia chinensis	2" CAL	76
PMX	Mexican Plum	Prunus mexicana	2" CAL	8
SHRUB				
ERB	Gopher Plant	Euphorbia rigida biglandulosa	5 GAL	57
MCS	Pink Hair Grass	Muhlenbergia capillaris	1 GAL	325
NTS	Mexican Feather Grass	Nassella tenuissima	1 GAL	528
PSR	Purple Fountain Grass	Pennisetum setaceum 'Rubrum'	1 GAL	261
PVG	Switchgrass	Panicum virgatum	1 GAL	757
SSM	Baby Sage	Salvia sylvestris 'May Night'	5 GAL	432
Grand total: 3078				3078

NORTH"

0 10' 20' 40'

SCALE 1"= 20'-0"

RNL
1050 17th STREET
SUITE A200
DENVER, CO 80265
303 295 1717 t
303 292 0845 f

100% CONSTRUCTION DOCUMENTS

REFERENCES -- BENCHMARKS

DATE	REVISIONS	BY

ARCHITECTS SEAL

REGISTERED LANDSCAPE ARCHITECT STEVEN WILENSKY 2615 STATE OF TEXAS

02/04/2016

THIS SHEET HAS BEEN SIGNED, SEALED, AND DATED ELECTRONICALLY

100% CONSTRUCTION DOCUMENTS

SCALE
HOR: SHOWN
VER: SHOWN

DATE 02/04/16
DESIGN BY Designer
DRAWN BY Author
CHKD. BY Checker
APPD. BY Approver

PROJECT NAME

NORTHGATE TRANSFER CENTER

EL PASO, TEXAS.

CITY OF EL PASO

CAPITAL IMPROVEMENT DEPARTMENT

THE CITY OF EL PASO TEXAS

SHEET TITLE

SITE PLANTING PLAN
ZONE 3

SHEET

L203

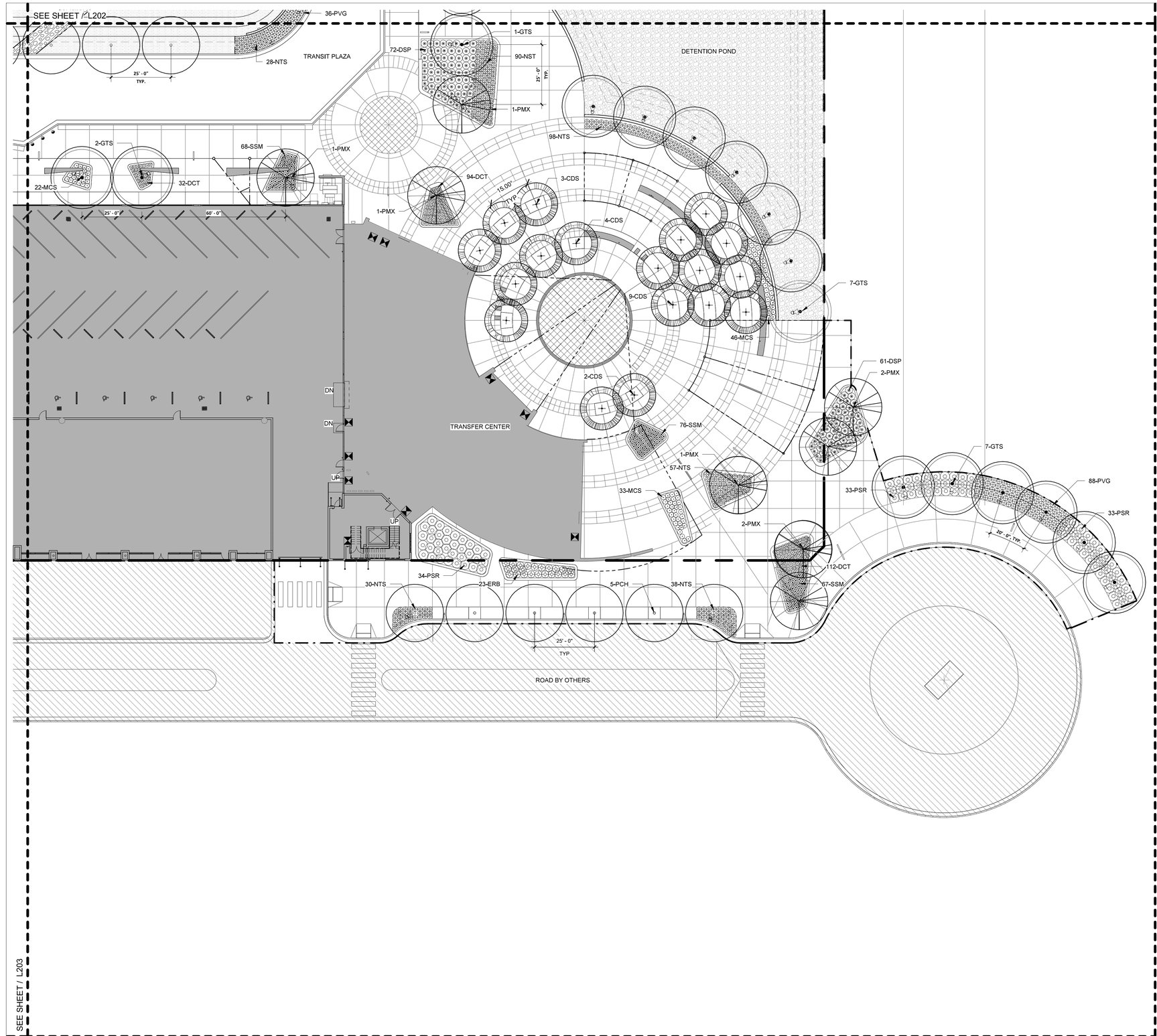

VICINITY MAP

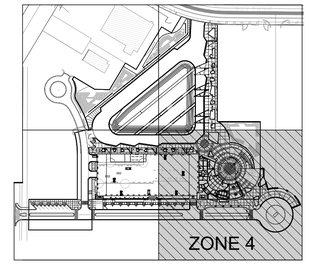

GRAPHIC LEGEND

- PROPERTY LINE
- LIMIT OF WORK
- MATCHLINE
- VEHICULAR ZONE BOUNDARY AT PLAZA
- EASEMENT
- CENTERLINE
- WORK BY OTHERS

MATERIAL LEGEND

SYMBOL/HATCH	
	DECOMPOSED GRANITE
	RED ANGULAR AGGREGATE
	GRAY ANGULAR AGREGATE
	SEED
	CONTROL JOINT
	EXPANSION JOINT
	STEEL EDGER
TR	TRASH RECEPTACLE
	CONCRETE BOLLARD
	LIGHT POLE
	FLAG POLE
	TREE GRATE
	SHADE STRUCTURE COLUMN

PLANTING SCHEDULE

SYMBOL	COMMON NAME	LATIN NAME	SIZE	COUNT
GROUNDCOVER				
DCT	Lemon Dalea	Dalea capitata	5 GAL	386
DSP	Hardy Ice Plant	Delosperma cooperi	1 GAL	195
SHADE TREE				
CDS	Palo Verde Thornless Desert Museum	Cercidium x 'Desert Museum'	2" CAL	18
GTS	Honey Locust Thorness Var	Gleditsia triacanthos inermis	2" CAL	35
PCH	Chinese Pistache Tree	Pistacia chinensis	2" CAL	76
PMX	Mexican Plum	Prunus mexicana	2" CAL	8
SHRUB				
ERB	Gopher Plant	Euphorbia rigida biglandulosa	5 GAL	57
MCS	Pink Hair Grass	Muhlenbergia capillaris	1 GAL	325
NTS	Mexican Feather Grass	Nassella tenuissima	1 GAL	528
PSR	Purple Fountain Grass	Pennisetum setaceum 'Rubrum'	1 GAL	261
PVG	Switchgrass	Panicum virgatum	1 GAL	757
SSM	Baby Sage	Salvia sylvestris 'May Night'	5 GAL	432
Grand total: 3078				3078

NORTH" SCALE 1"= 20'-0" (0, 10', 20', 40')

RNL
1050 17th STREET
SUITE A200
DENVER, CO 80265
303 295 1717 t
303 292 0845 f

100% CONSTRUCTION DOCUMENTS

REFERENCES – BENCHMARKS

BY	REVISIONS	DATE

ARCHITECT'S SEAL

This seal applies only to documents bearing original signature and date.

100% CONSTRUCTION DOCUMENTS

SCALE
HOR: SHOWN
VER: SHOWN

DATE 02/24/15
DESIGN BY Designer
DRAWN BY Author
CHKD BY Checker
APPD BY Approver

PROJECT NAME
NORTHGATE TRANSFER CENTER
EL PASO, TEXAS.

CITY OF EL PASO
CAPITAL IMPROVEMENT DEPARTMENT

SHEET TITLE
SITE PLANTING PLAN
ZONE 4

SHEET
L204

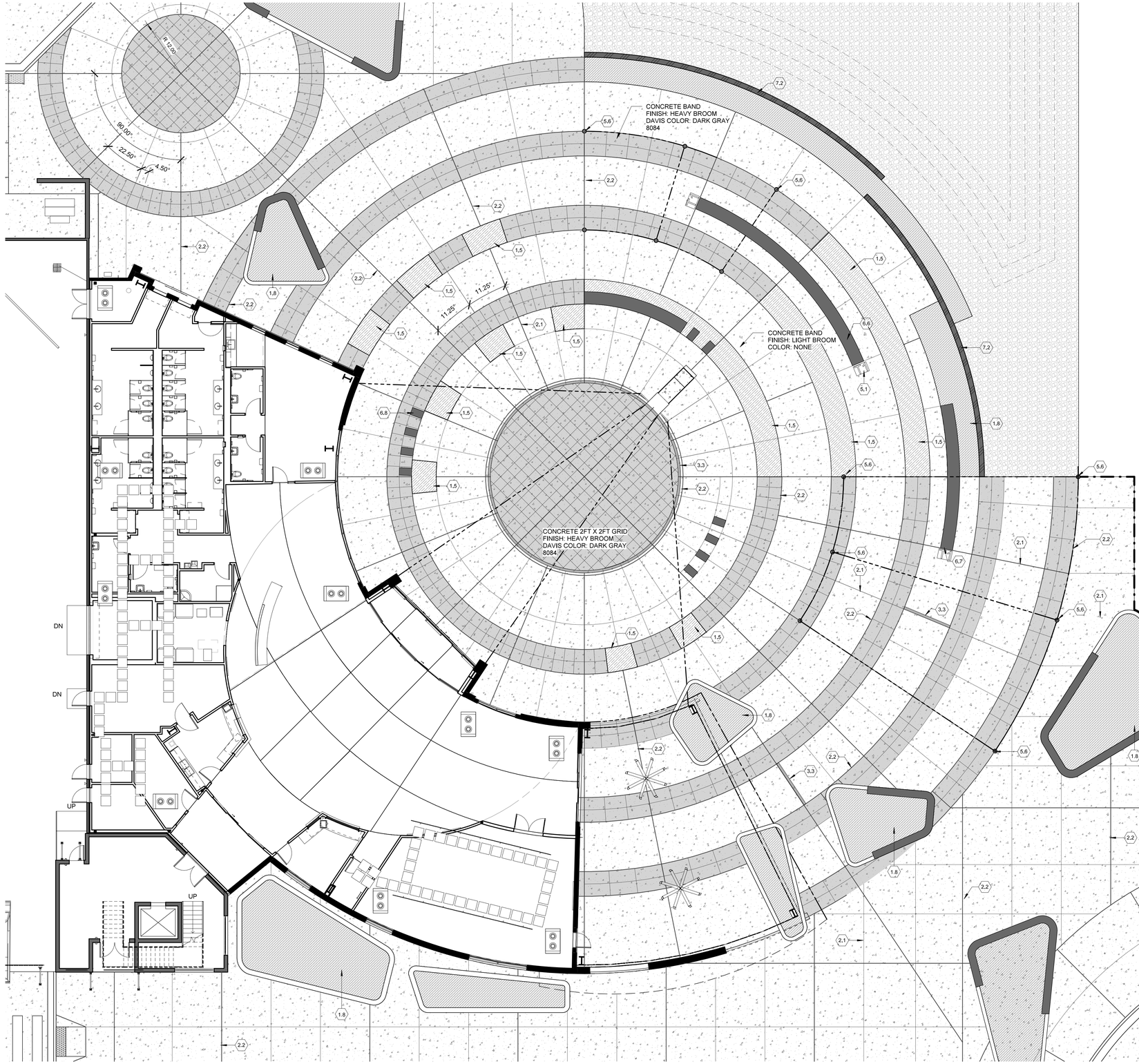

GRAPHIC LEGEND

- PROPERTY LINE
- LIMIT OF WORK
- MATCHLINE
- VEHICULAR ZONE BOUNDARY AT PLAZA
- GRADING CONTOUR
- CENTERLINE
- WORK BY OTHERS
- DETAIL CALLOUT (1 / A101) — DETAIL NUMBER, SHEET WHERE IT IS SHOWN
- ENLARGEMENT PLAN (1 / A101) — DETAIL NUMBER, SHEET WHERE IT IS SHOWN
- KEYNOTE (?)

MATERIAL LEGEND

SYMBOL/HATCH	PLAN NOTE	DESCRIPTION
	1.1	CONCRETE CURB & GUTTER
	1.2	CONCRETE TYPE 1
	1.3	CONCRETE TYPE 2
	1.4	TACTILE WARNING STRIP
	1.5	DECOMPOSED GRANITE
	1.6	RED ANGULAR AGREGATE
	1.7	GRAY ANGULAR AGGREGATE
	1.8	WOOD CHIP MULCH
	1.9	SOD
	2.0	VEHICULAR PAVEMENT ZONE
	2.1	CONTROL JOINT
	2.2	EXPANISON JOINT
	3.1	RAMP
	3.2	STEEL EDGER
	3.3	CUSTOM TRENCH DRAIN
T1	5.1	TRASH RECEPTACLE
	5.2	BOLLARD
	5.3	LIGHTING (SEE ELECTRICAL)
	5.4	FLAG POLE
	5.5	TREE GRATE
	5.6	SHADE STRUCTURE COLUMN
	6.1	BENCH TYPE A
	6.2	BENCH TYPE B
	6.3	BENCH TYPE C
	6.4	BENCH TYPE D
	6.5	BENCH TYPE E
	6.6	BENCH TYPE F
	6.7	BENCH TYPE G
	6.8	BENCH TYPE H
	7.1	ROCK WALL
	7.2	CONCRETE SCREEN WALL
	7.3	SIGNAGE WALL
	7.4	WROUGHT IRON RAILING

NOTES

SEE ELECTRICAL FOR LIGHT STANDARDS AND GROUND MOUNTED FIXTURES

SEE SHEET L100 FOR DETAILED MATERIALS SPECIFICATIONS

NORTH" SCALE 1"= 10'-0" (0, 10', 20')

RNL
1050 17th STREET
SUITE A200
DENVER, CO 80265
303 295 1717 t
303 292 0845 f

100% CONSTRUCTION DOCUMENTS

REFERENCES – BENCHMARKS

DATE	REVISIONS	BY

ARCHITECT'S SEAL

THIS ITEM IS PRELIMINARY AND NOT FOR CONSTRUCTION PURPOSES (ART. 8.45.E)

100% CONSTRUCTION DOCUMENTS

SCALE
HOR: SHOWN
VER: SHOWN

DATE 02/04/15
DESIGN BY Designer
DRAWN BY Author
CHKD BY Checker
APPD BY Approver

PROJECT NAME

NORTHGATE TRANSFER CENTER

EL PASO, TEXAS.

CITY OF EL PASO

CAPITAL IMPROVEMENT DEPARTMENT

SHEET TITLE

SITE PAVEMENT ENLARGEMENT

SHEET

L301

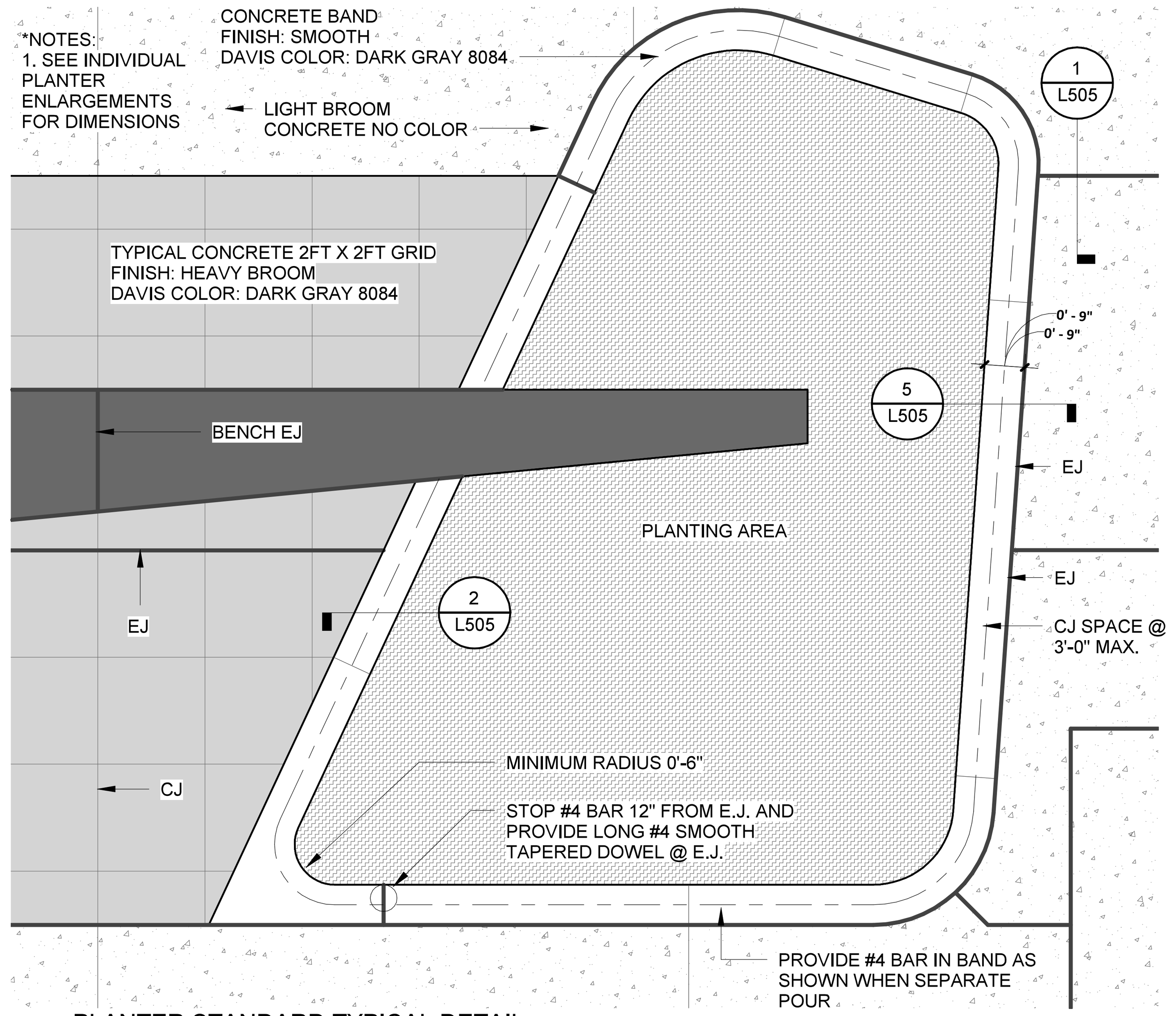

1 PLANTER STANDARD TYPICAL DETAIL
3/8" = 1'-0"

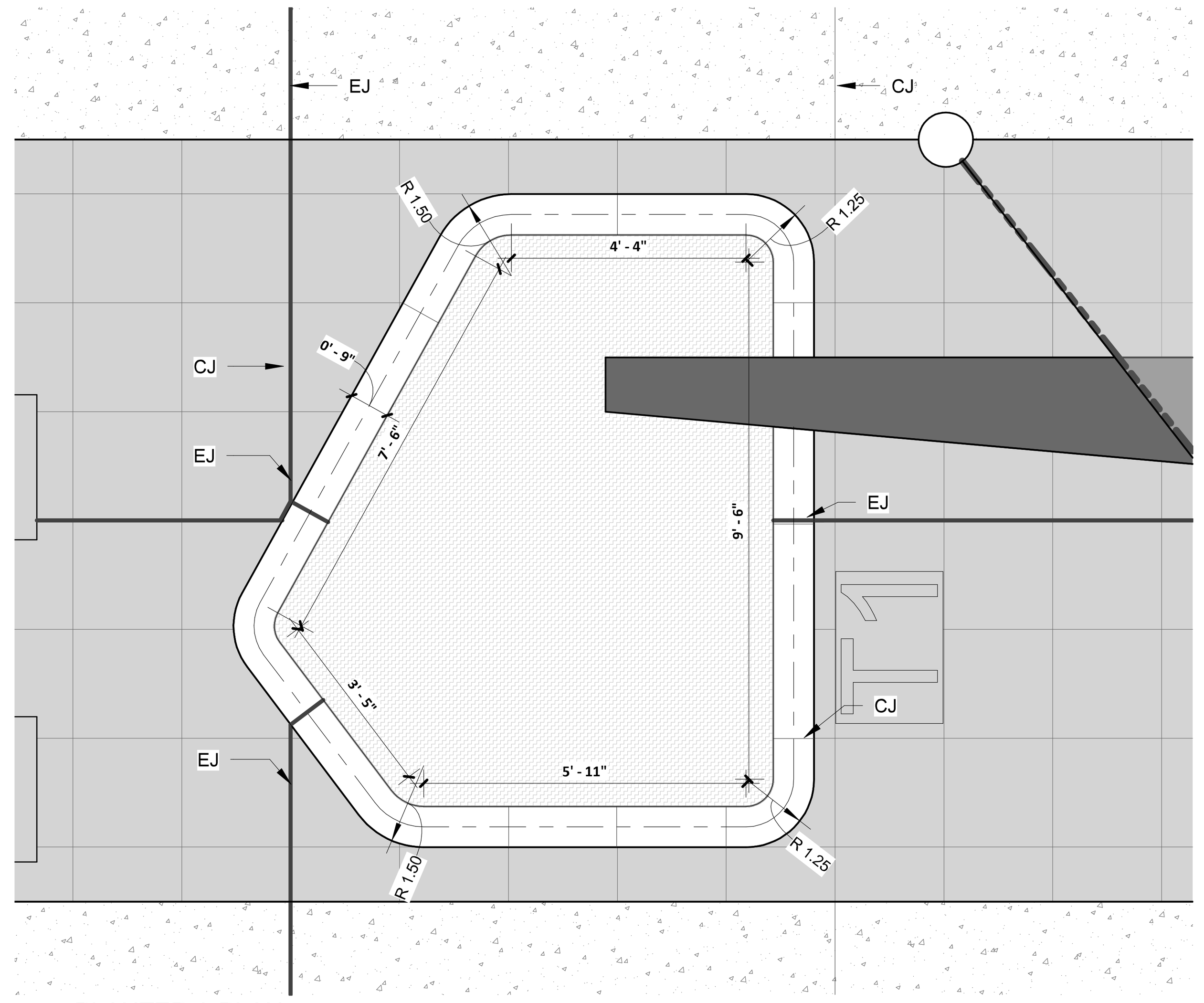

2 PLANTER A PLAN
3/8" = 1'-0"

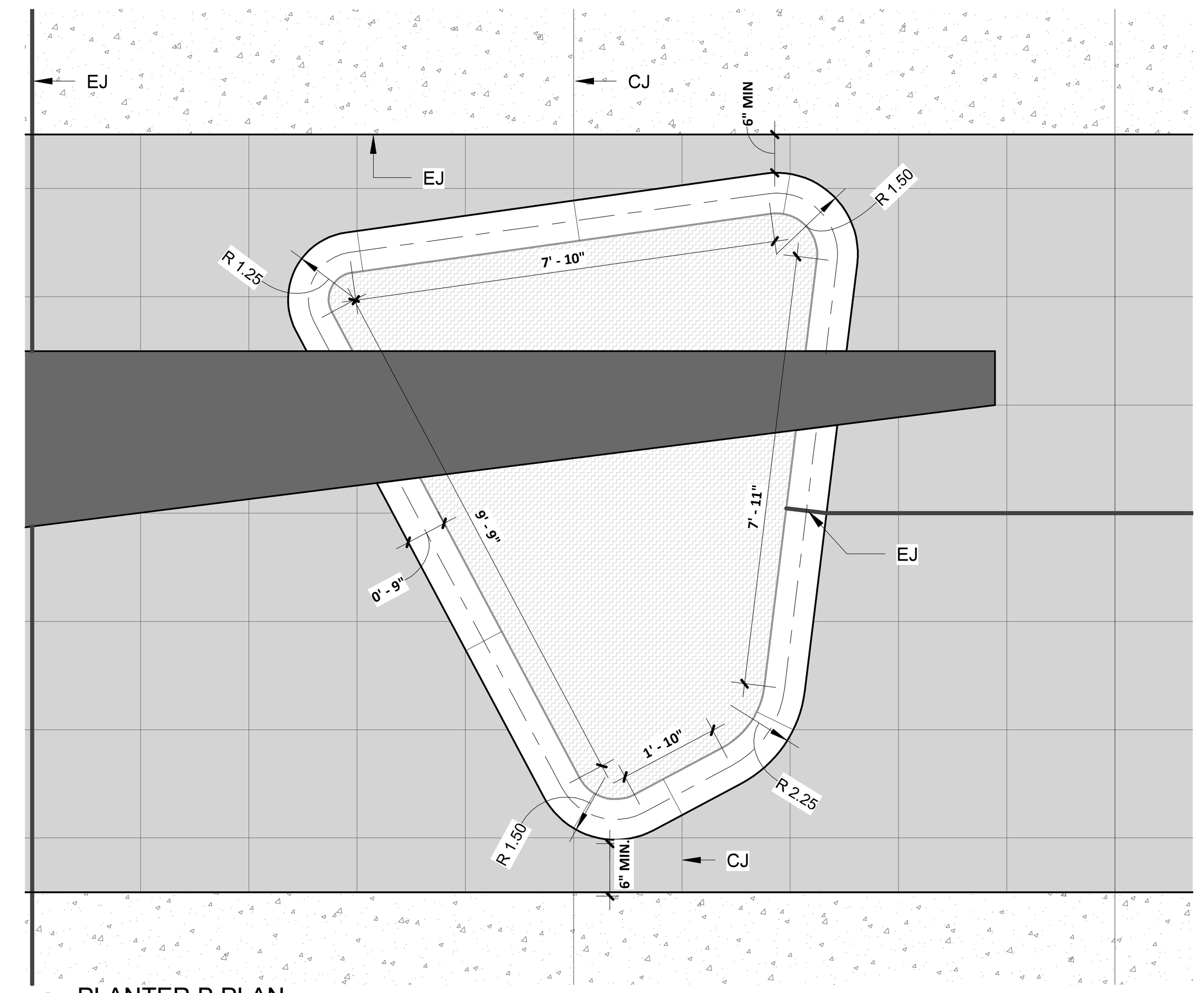

3 PLANTER B PLAN
3/8" = 1'-0"

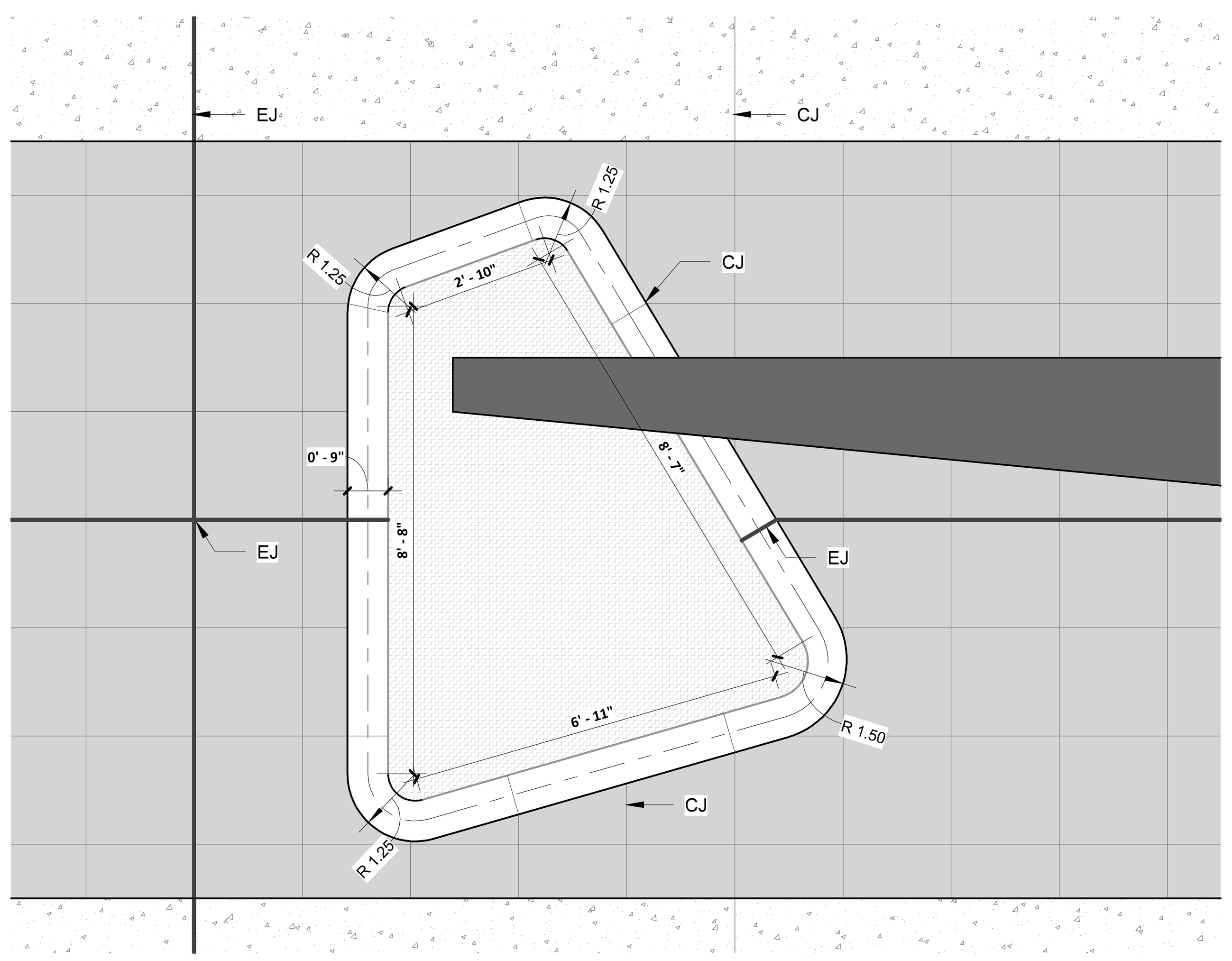

4 PLANTER C PLAN
3/8" = 1'-0"

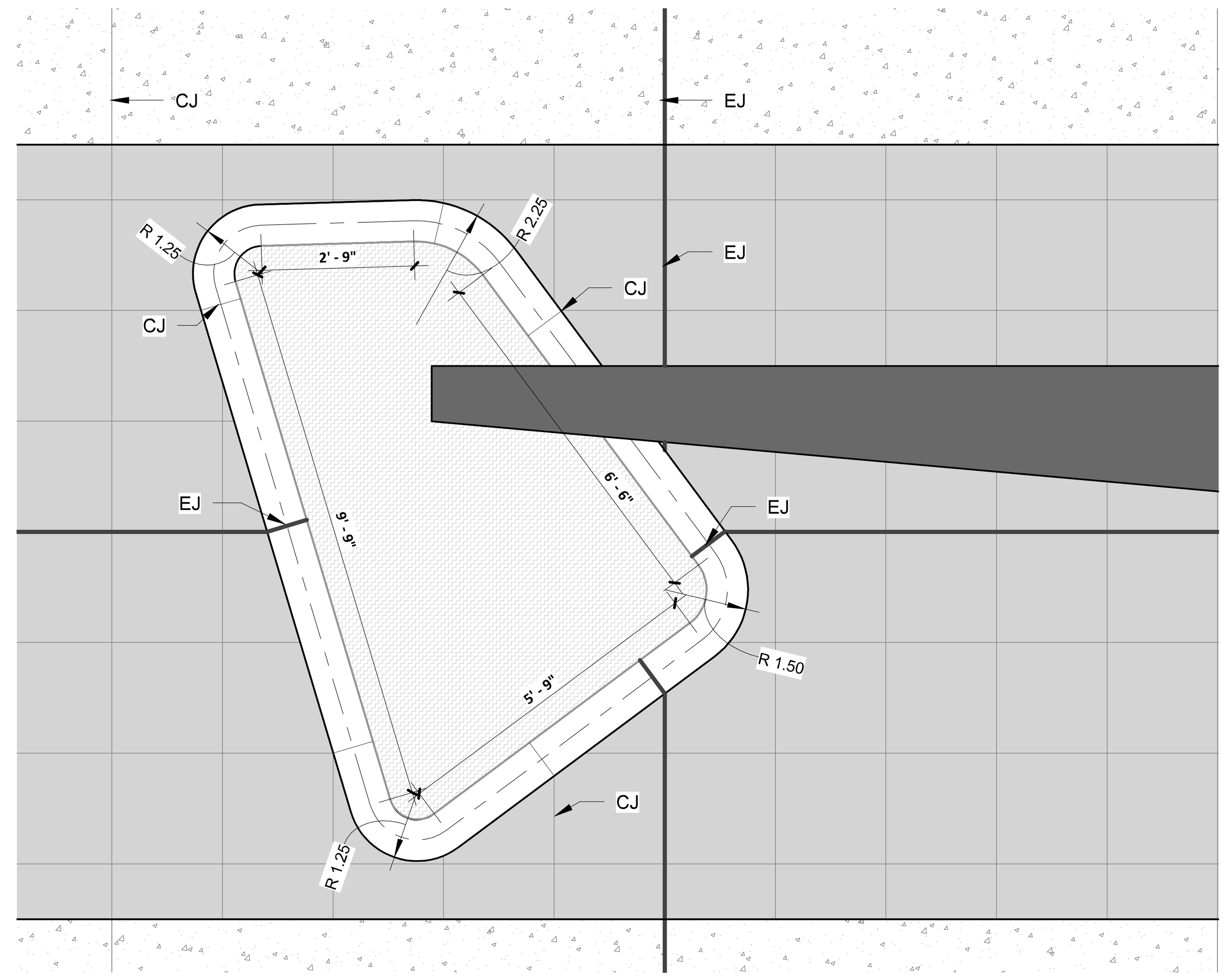

5 PLANTER D PLAN
3/8" = 1'-0"

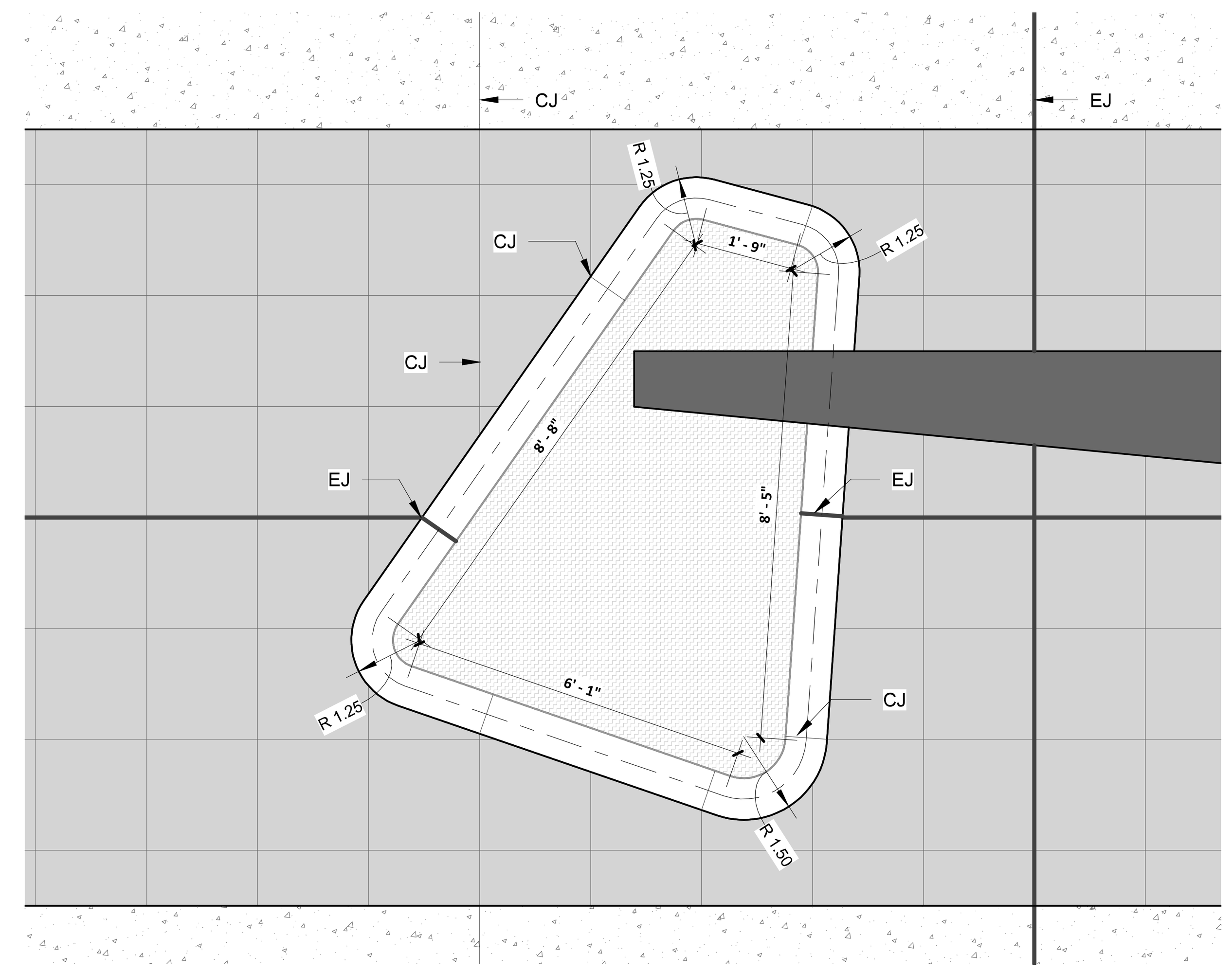

6 PLANTER E PLAN
3/8" = 1'-0"

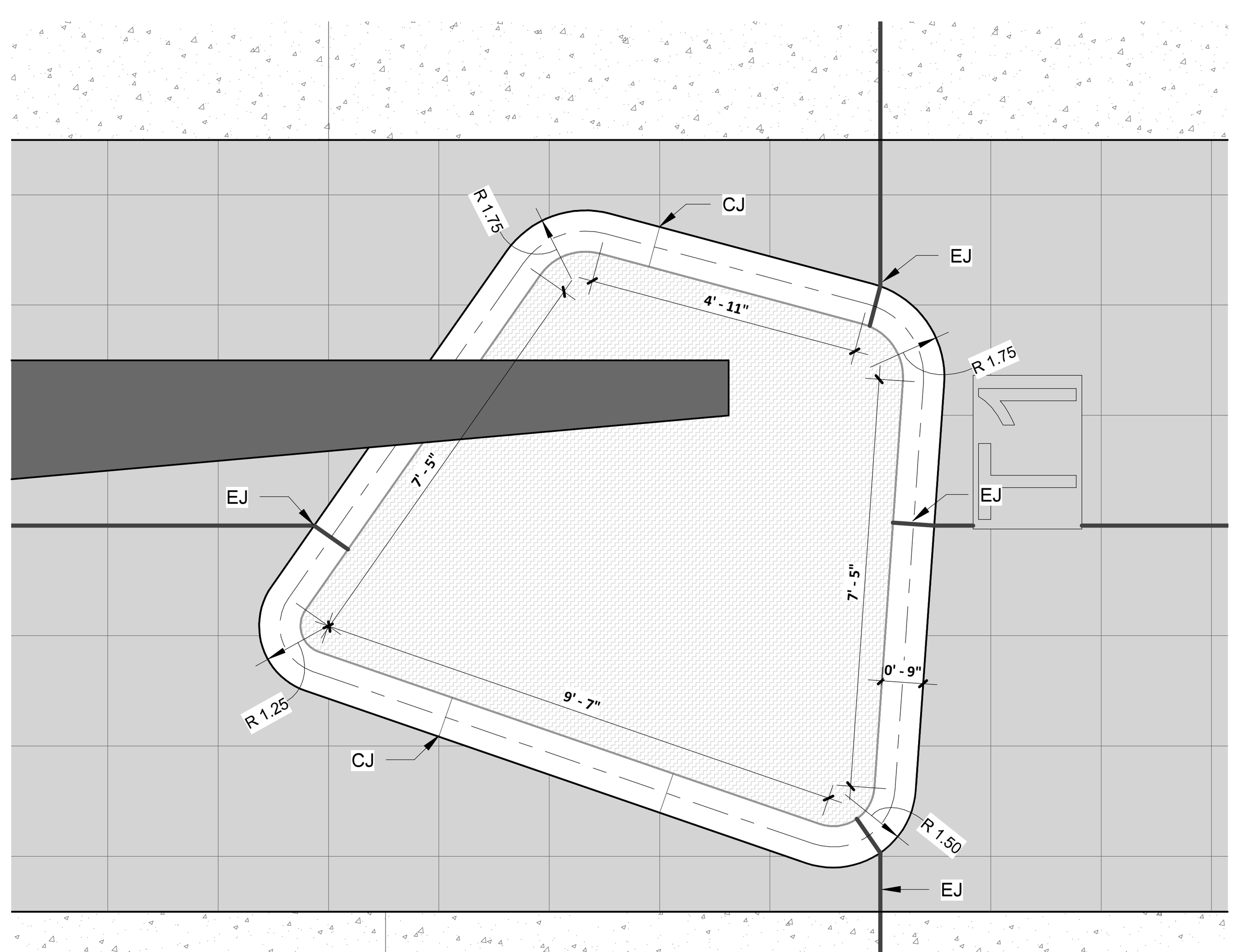

14 PLANTER F PLAN
3/8" = 1'-0"

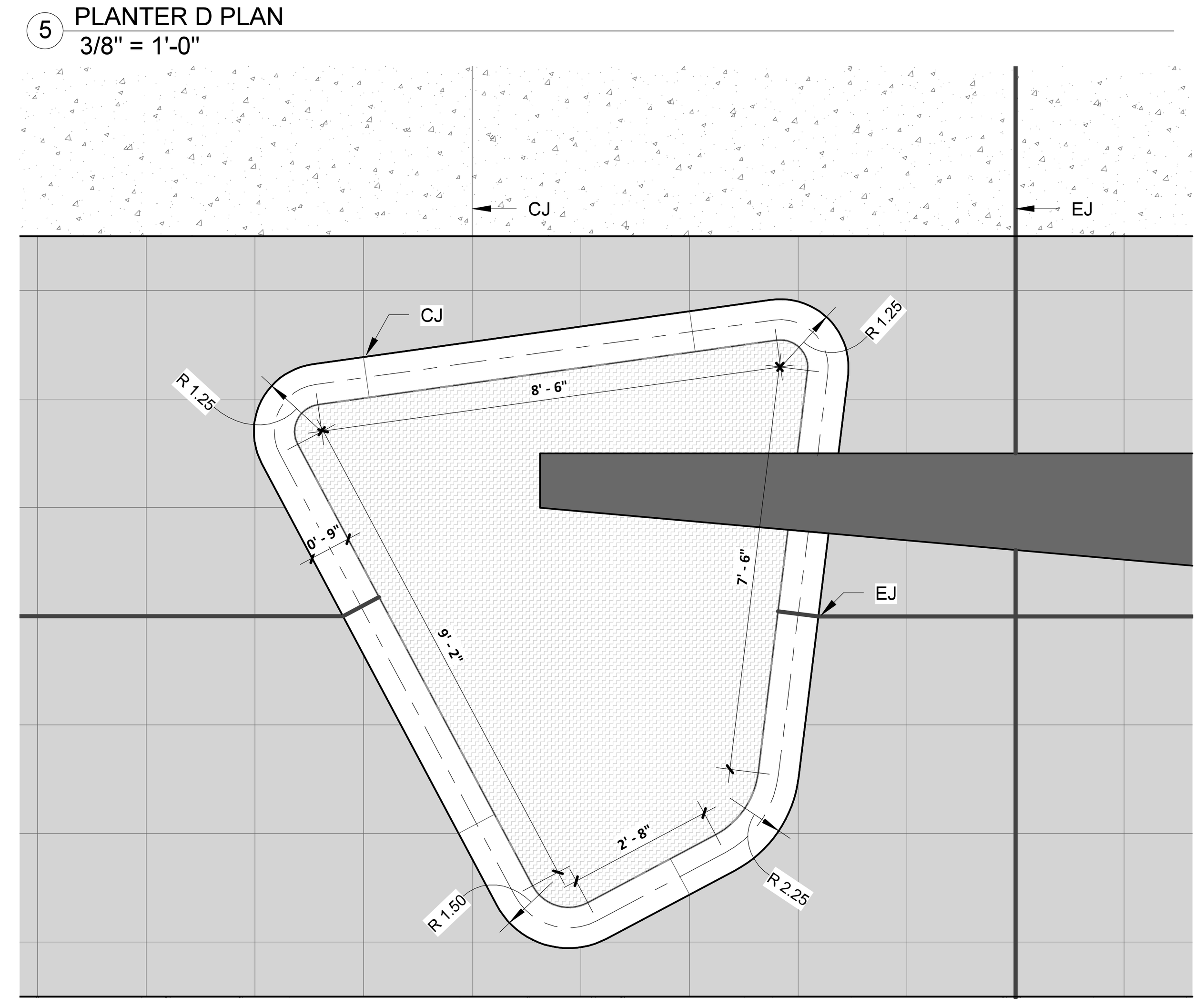

7 PLANTER G PLAN
3/8" = 1'-0"

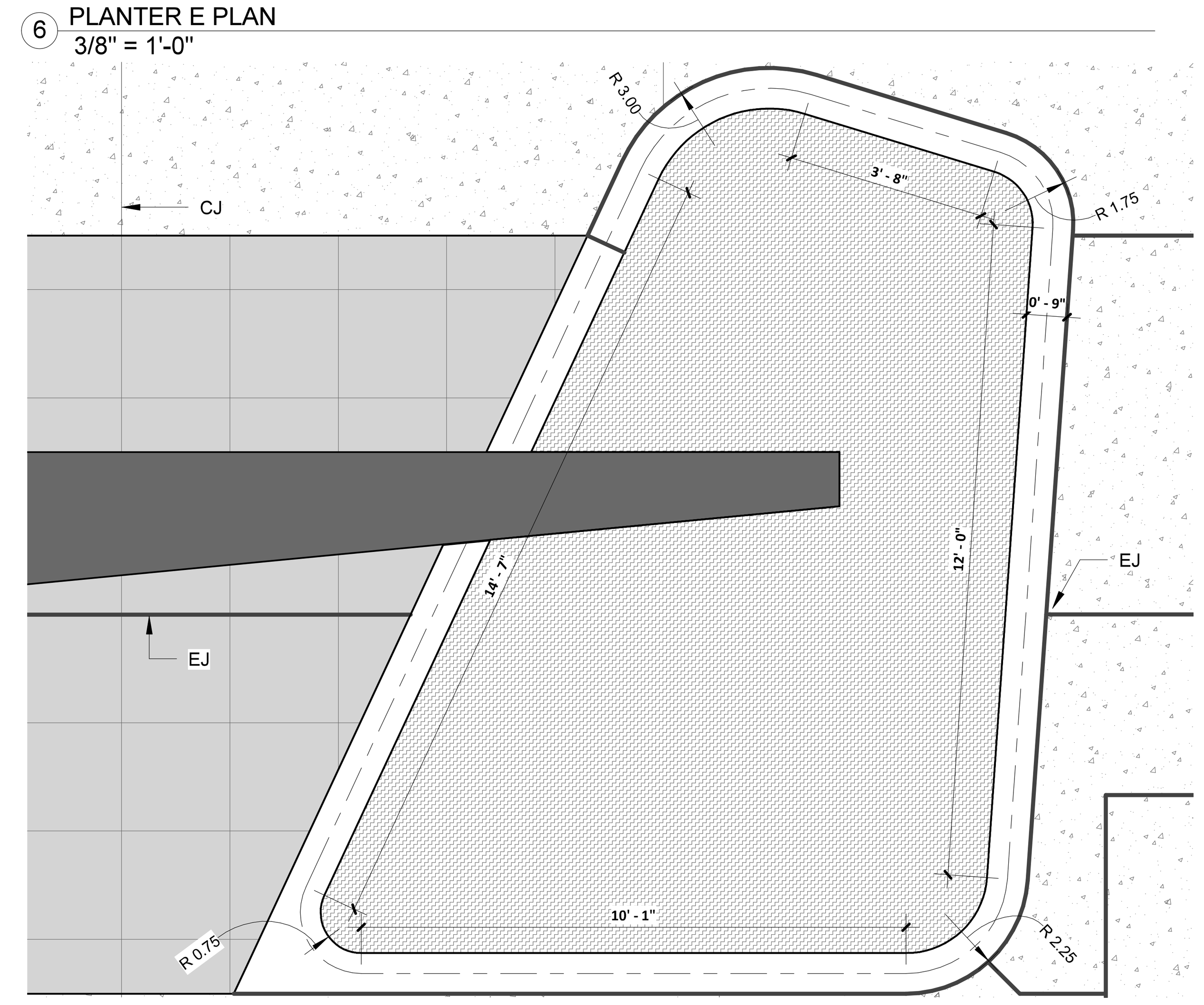

8 PLANTER H PLAN
3/8" = 1'-0"

RNL
1050 17th STREET
SUITE A200
DENVER, CO 80265
303 295 1717 t
303 292 0845 f

100% CONSTRUCTION DOCUMENTS

REFERENCES – BENCHMARKS
DATE | REVISIONS | BY

ARCHITECTS SEAL
100% CONSTRUCTION DOCUMENTS

SCALE
HOR: SHOWN
VER: SHOWN
DATE
DESIGN BY Designer
DRAWN BY Author
CHKD. BY Checker
APPD. BY Approver

PROJECT NAME
NORTHGATE TRANSFER CENTER
EL PASO, TEXAS.

CITY OF EL PASO
CAPITAL IMPROVEMENT DEPARTMENT

THE CITY OF EL PASO TEXAS

SHEET TITLE
PLANTER ENLARGEMENTS

SHEET
L302

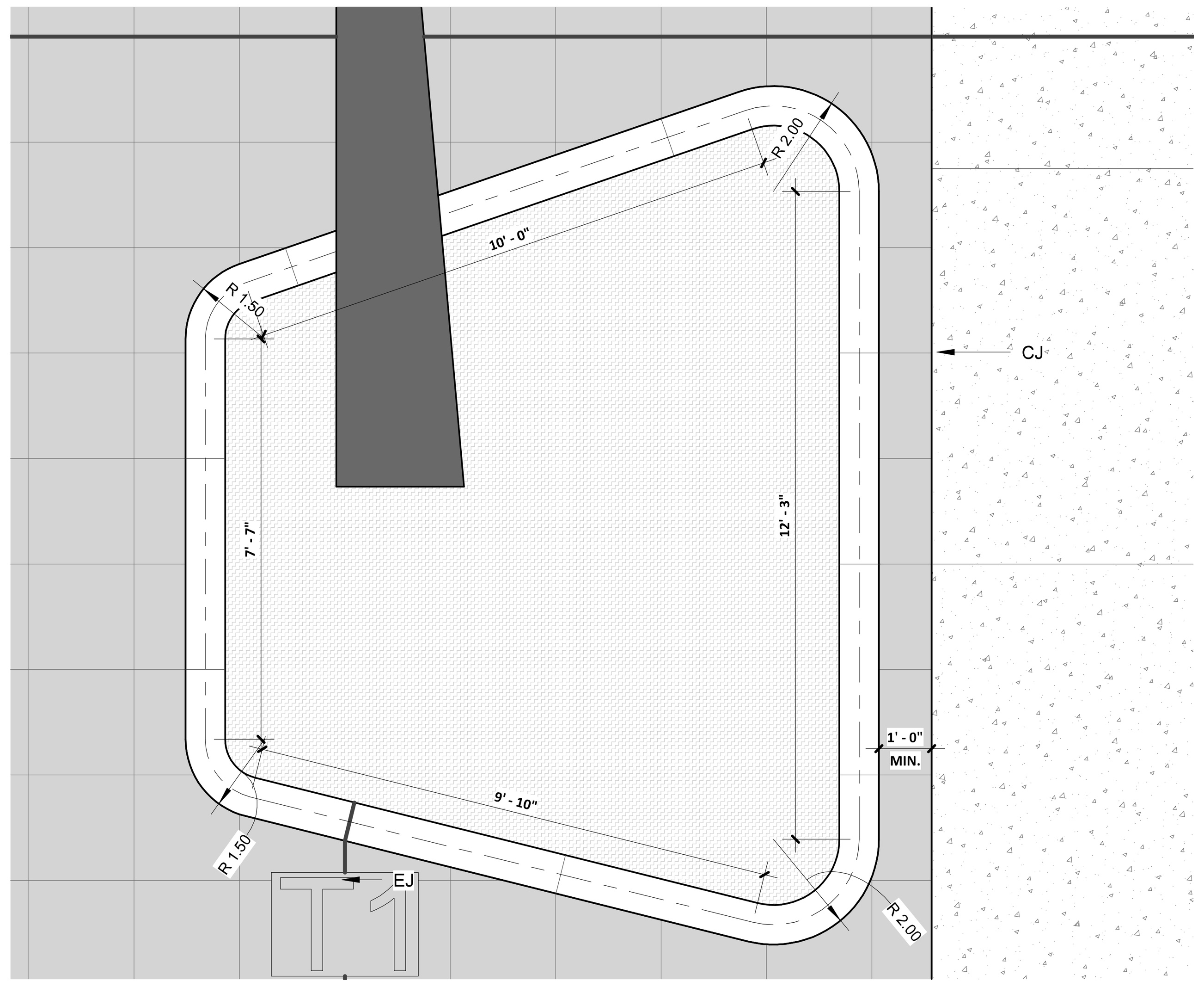

7 PLANTER I PLAN
3/8" = 1'-0"

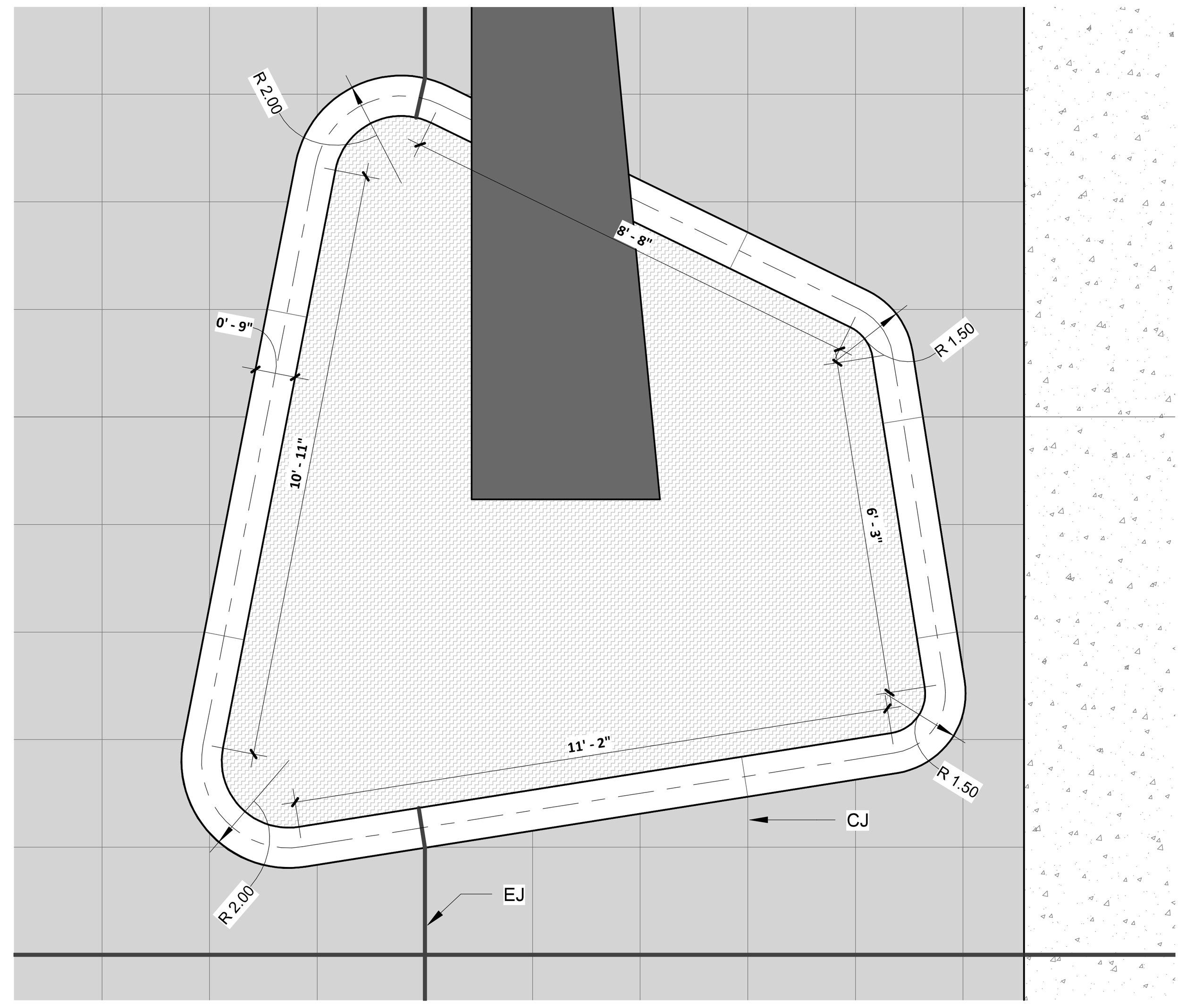

2 PLANTER K PLAN
3/8" = 1'-0"

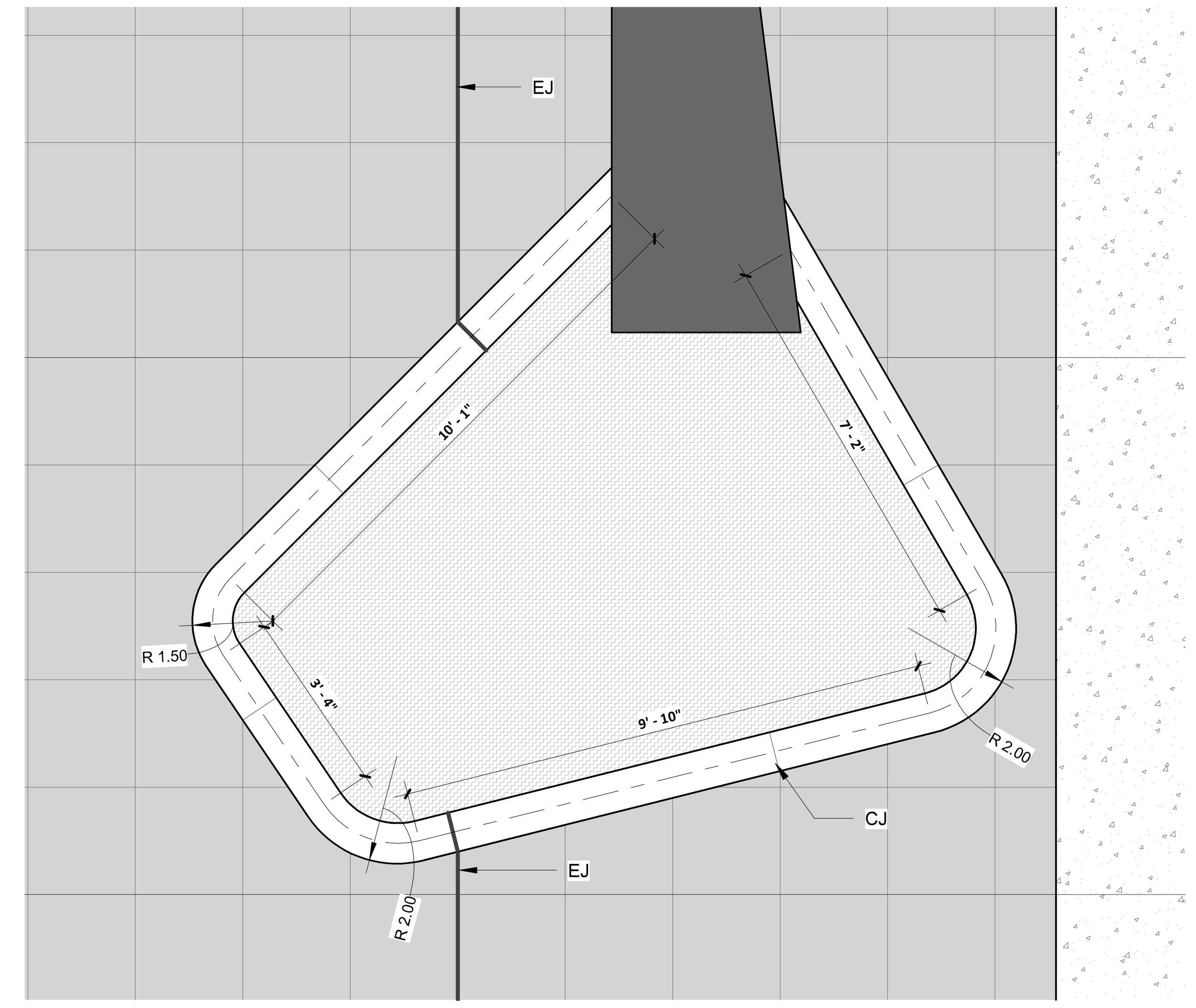

4 PLANTER M PLAN
3/8" = 1'-0"

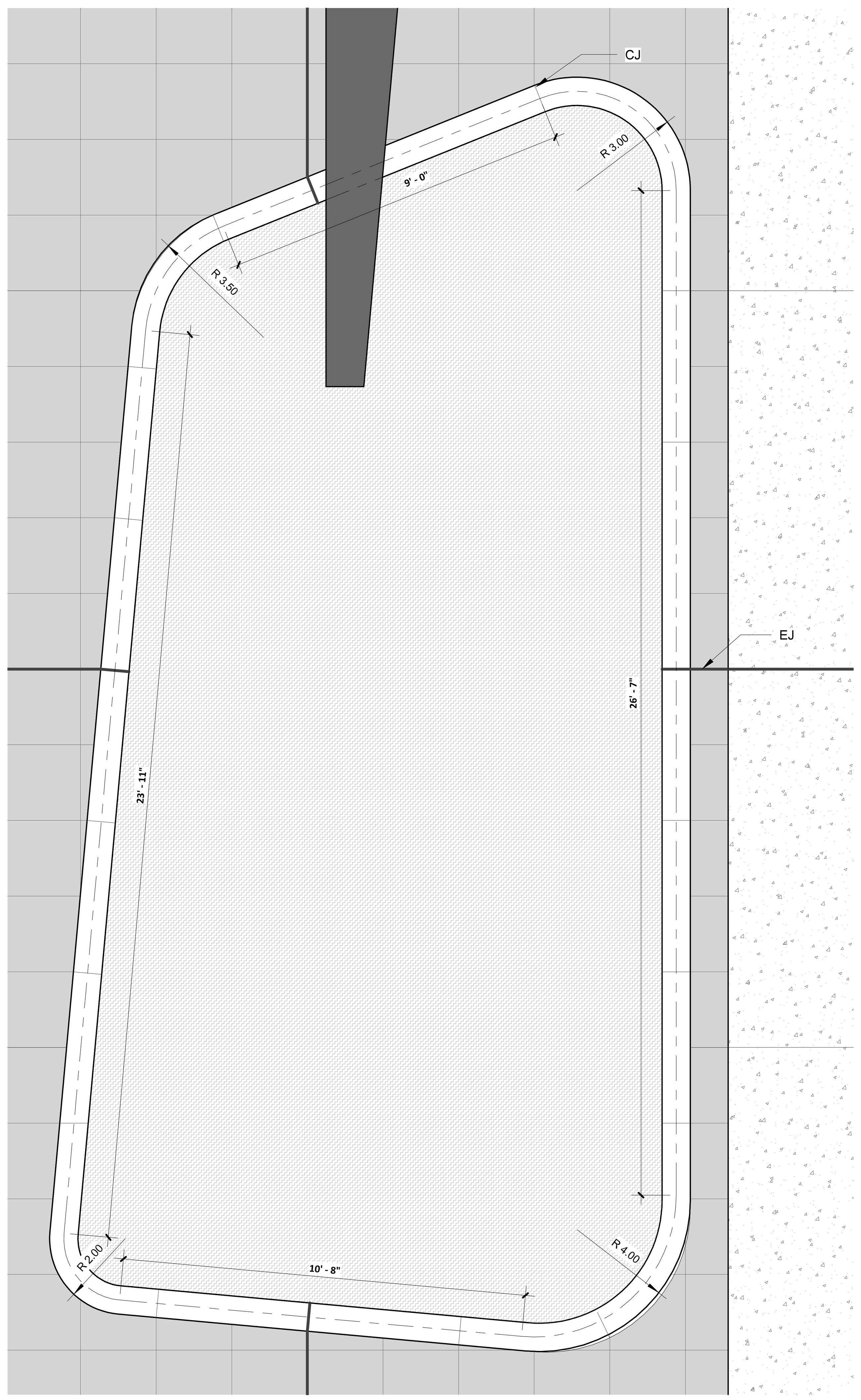

1 PLANTER J PLAN
3/8" = 1'-0"

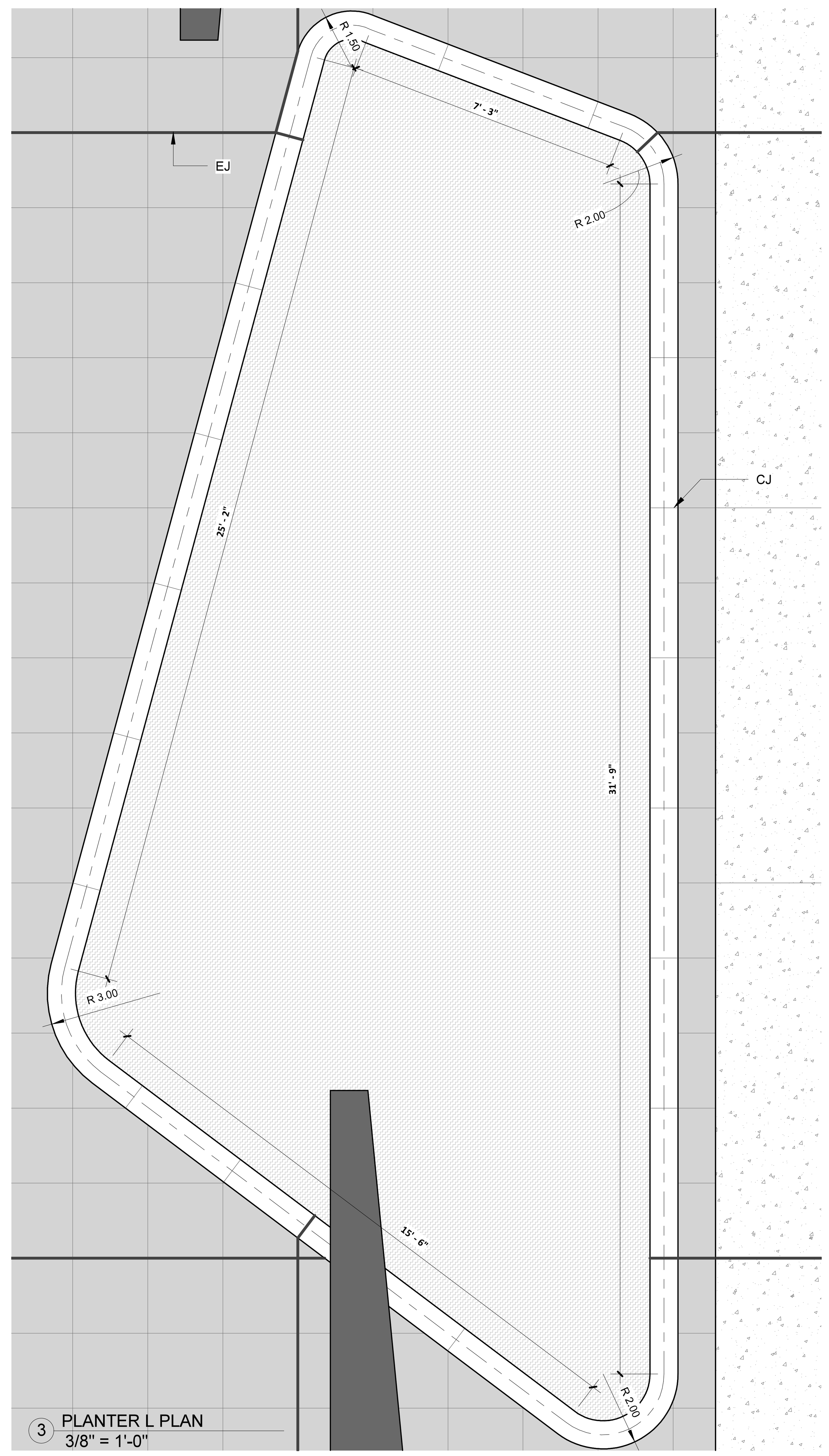

3 PLANTER L PLAN
3/8" = 1'-0"

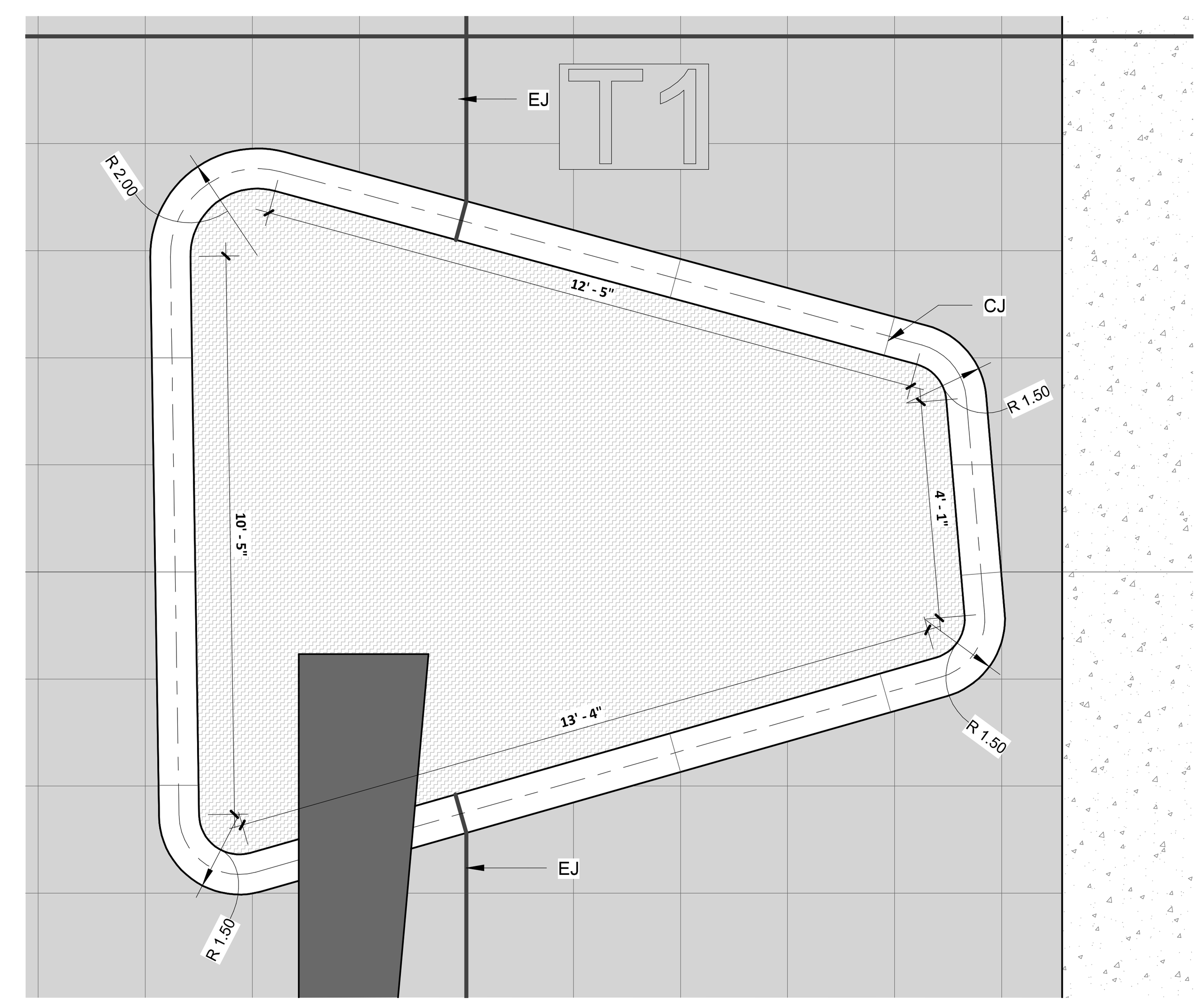

5 PLANTER N PLAN
3/8" = 1'-0"

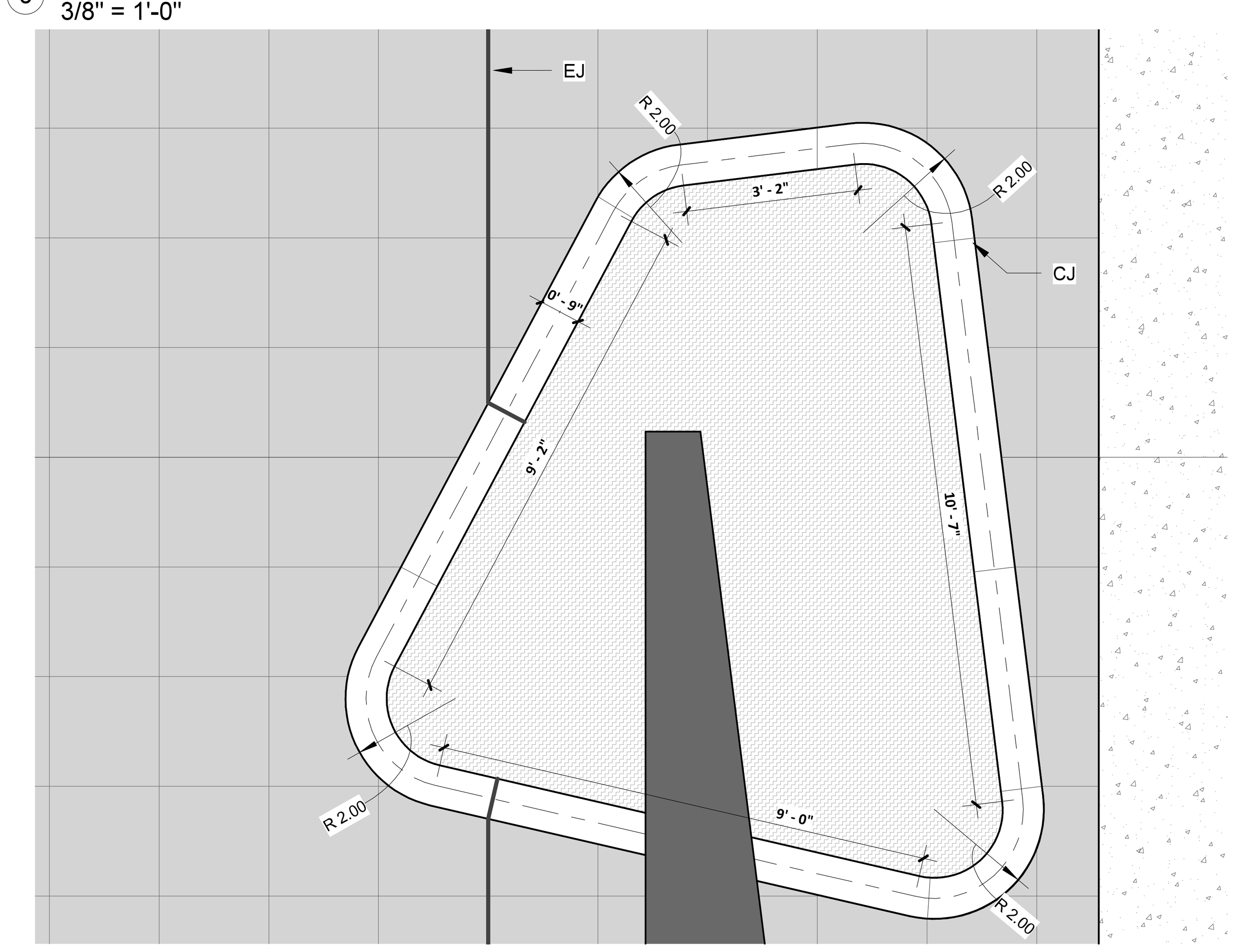

6 PLANTER O PLAN
3/8" = 1'-0"

RNL
1050 17th STREET
SUITE A200
DENVER, CO 80265
303 295 1717 t
303 292 0845 f

100% CONSTRUCTION DOCUMENTS

REFERENCES – BENCHMARKS

DATE | REVISIONS | BY

ARCHITECTS SEAL

100% CONSTRUCTION DOCUMENTS

SCALE
HOR: SHOWN
VER: SHOWN

DATE: 05/08/15
DESIGN BY: Designer
DRAWN BY: Author
CHK'D. BY: Checker
APP'D. BY: Approver

PROJECT NAME
NORTHGATE TRANSFER CENTER
EL PASO, TEXAS.

CITY OF EL PASO
CAPITAL IMPROVEMENT DEPARTMENT

THE CITY OF EL PASO TEXAS

SHEET TITLE
PLANTER ENLARGEMENTS

SHEET
L303

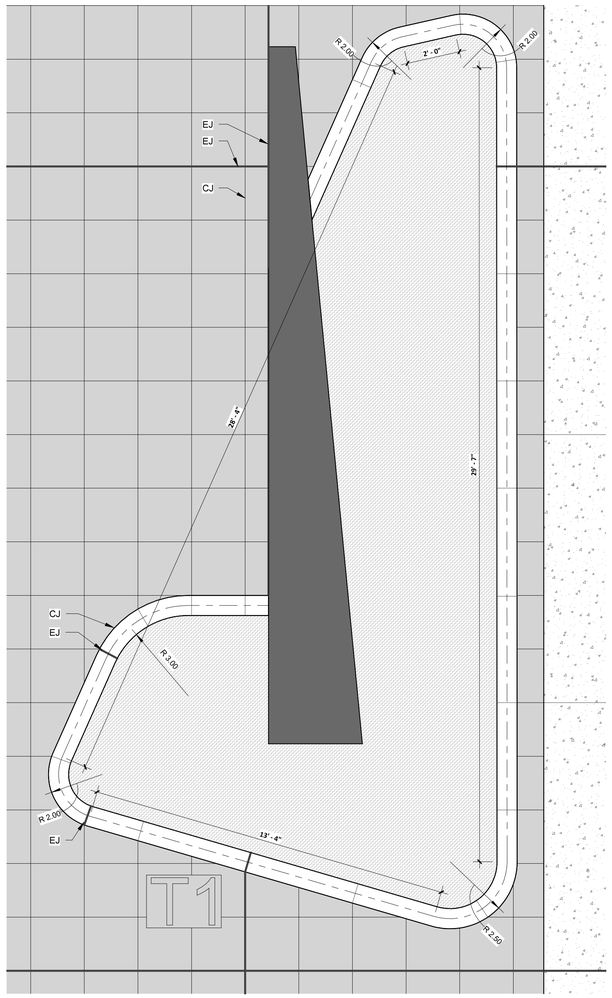

1 PLANTER P PLAN
3/8" = 1'-0"

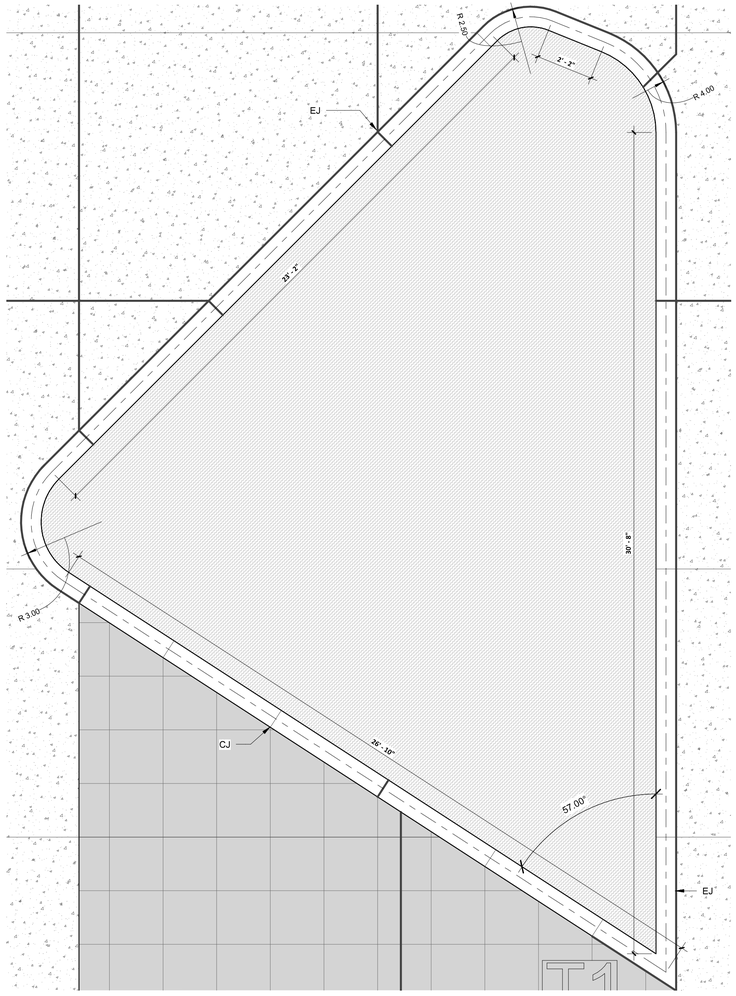

2 PLANTER Q PLAN
3/8" = 1'-0"

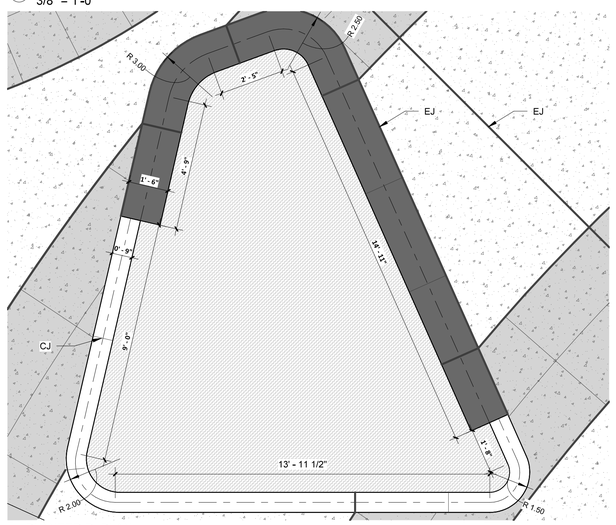

3 PLANTER R PLAN
3/8" = 1'-0"

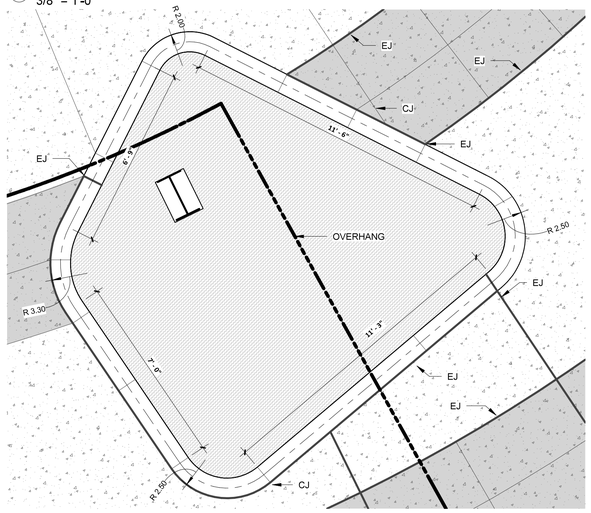

4 PLANTER S PLAN
3/8" = 1'-0"

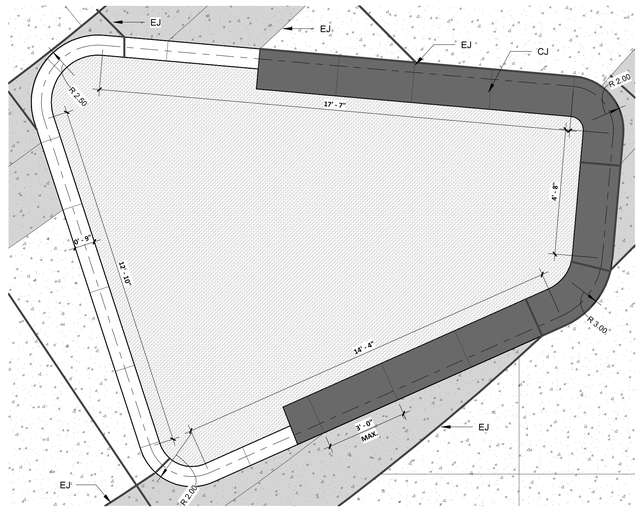

5 PLANTER T PLAN
3/8" = 1'-0"

100% CONSTRUCTION DOCUMENTS

RNL
1050 17th STREET
SUITE A200
DENVER, CO 80265
303 295 1717 t
303 292 0845 f

REFERENCES – BENCHMARKS

ARCHITECT'S SEAL

DATE	REVISIONS	BY

SCALE
HOR: SHOWN
VER: SHOWN

DATE 03/24/15
DESIGN BY Designer
DRAWN BY Author
CHKD BY Principal
APPD. BY Approver

PROJECT NAME
NORTHGATE TRANSFER CENTER
EL PASO, TEXAS.

CITY OF EL PASO
CAPITAL IMPROVEMENT DEPARTMENT

SHEET TITLE
PLANTER ENLARGEMENTS

SHEET
L304

1 PLANTER U PLAN
3/8" = 1'-0"

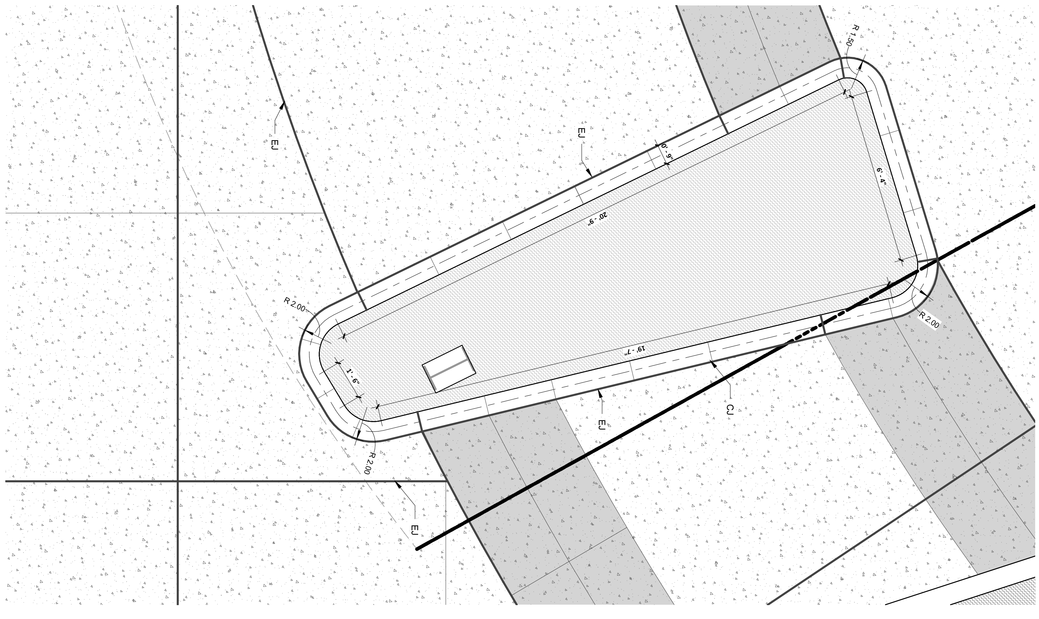

2 PLANTER V PLAN
3/8" = 1'-0"

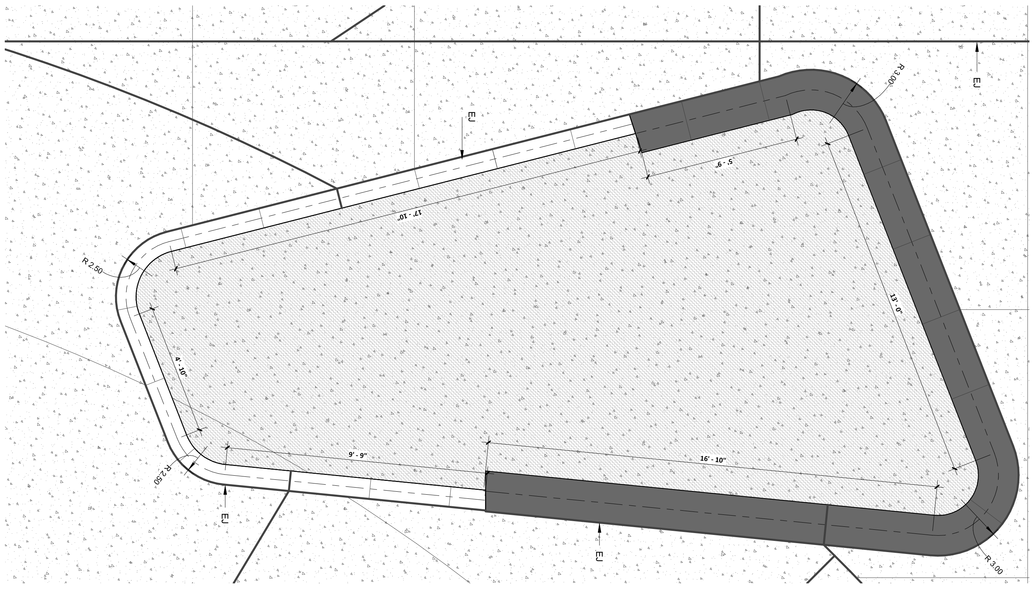

3 PLANTER W PLAN
3/8" = 1'-0"

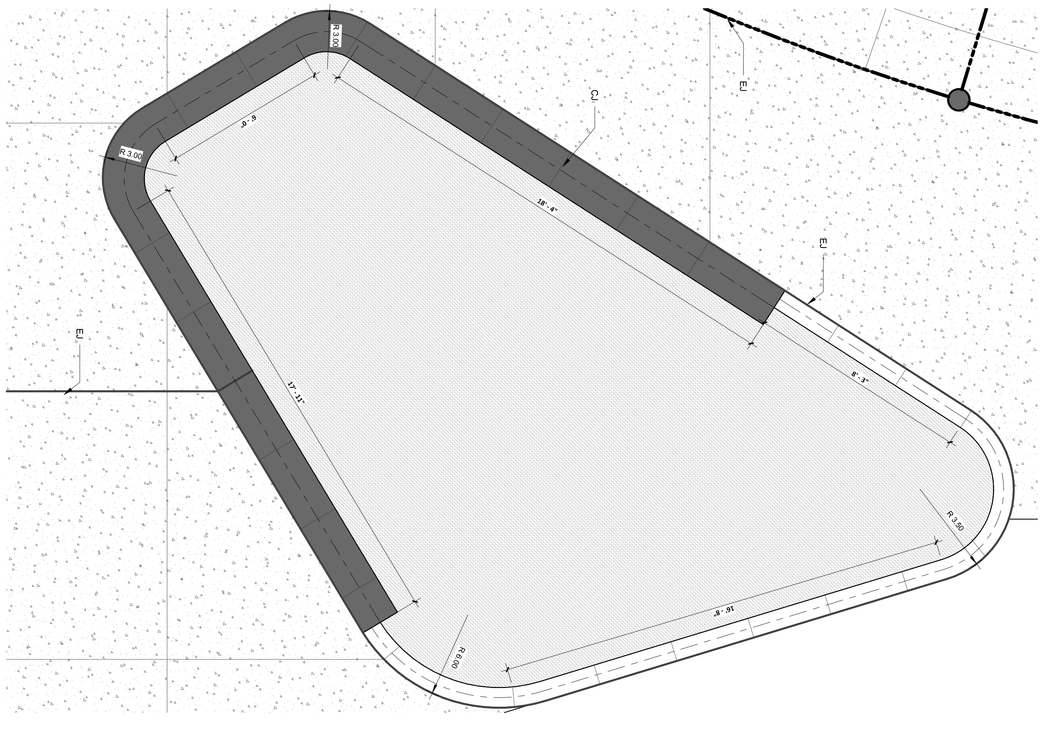

100% CONSTRUCTION DOCUMENTS

RNL
1050 17th STREET
SUITE A200
DENVER, CO 80265
303 295 1717 t
303 292 0845 f

SHEET L305

SHEET TITLE
PLANTER ENLARGEMENTS

THE CITY OF EL PASO TEXAS

CITY OF EL PASO

CAPITAL IMPROVEMENT DEPARTMENT

PROJECT NAME

NORTHGATE TRANSFER CENTER

EL PASO, TEXAS.

SCALE
HOR: SHOWN
VER: SHOWN

DATE 02/04/16
DESIGN BY Designer
DRAWN BY Author
CHKD. BY Checker
APPD. BY Approver

ARCHITECTS SEAL
REGISTERED LANDSCAPE ARCHITECT
BRENDEN WILKERSON
STATE OF TEXAS
02/04/2016
THIS SHEET WAS WERE ISSUED, SEALED AND DATED ELECTRONICALLY.
100% CONSTRUCTION DOCUMENTS

REFERENCES – BENCHMARKS

DATE	REVISIONS	BY

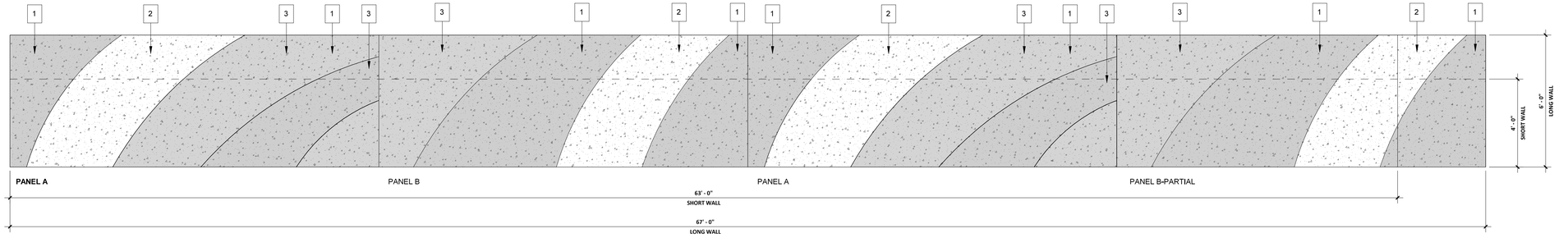

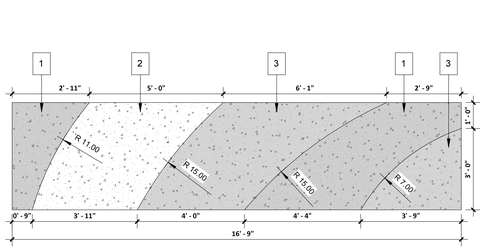

PANEL A - 4 FOOT TALL WALL

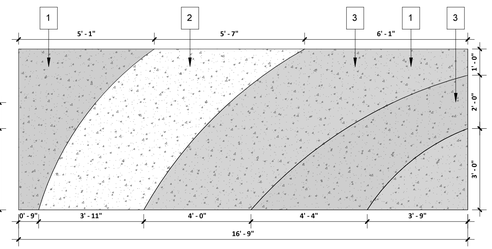

PANEL A - 6 FOOT TALL WALL

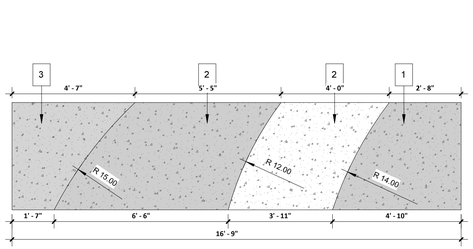

PANEL B - 4 FOOT TALL WALL

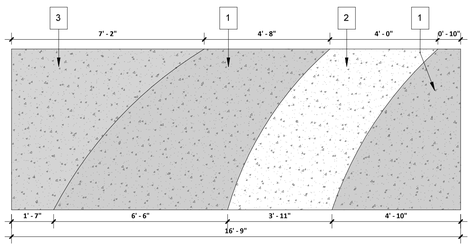

PANEL B - 6 FOOT TALL WALL

1 BUSH HAMMER # 17994

2 NO FORM LINER

2 BROOM FINISH # 17990

NOTE:
FORMLINER TEXTURE ON WALL TO BE APPLIED TO BOTH OPPOSING SIDES-MIRROR; IMAGE NO TEXTURE ON ENDS.

FITZGERALD FORMLINERS
1.800.547.7760
1500 E.CHESTNUT AVE.
SANTA CLARA, CA 92701

1 ELEVATION_LONG & SHORT CONCRETE SCREEN WALL
3/8" = 1'-0"

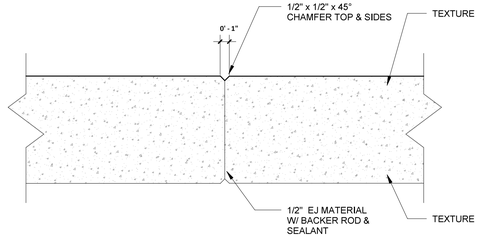

2 PLAN_CONCRETE WALL EXPANSION JOINT
1 1/2" = 1'-0"

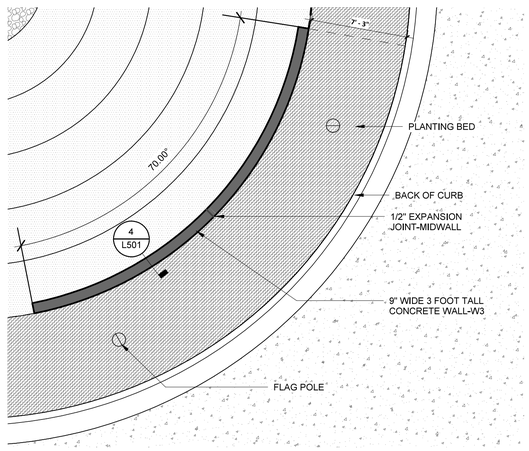

3 W3 CONCRETE_SIGN WALL_PLAN
3/16" = 1'-0"

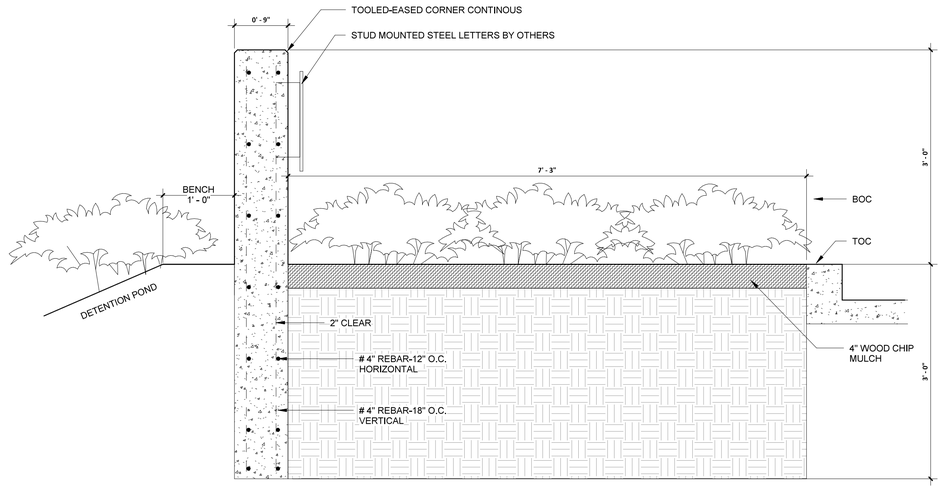

4 WALL TYPE 3_SIGN WALL_SECTION
1" = 1'-0"

100% CONSTRUCTION DOCUMENTS

REFERENCES – BENCHMARKS

REVISIONS

BY	DATE

ARCHITECTS SEAL

100% CONSTRUCTION DOCUMENTS

SCALE
HOR: SHOWN
VER: SHOWN

DATE 02/24/15
DESIGN BY Designer
DRAWN BY Author
CHKD BY Checker
APPD BY Approver

PROJECT NAME
NORTHGATE TRANSFER CENTER
EL PASO, TEXAS.

CITY OF EL PASO
CAPITAL IMPROVEMENT DEPARTMENT

SHEET TITLE
DETAILS

SHEET
L501

RNL
1050 17th STREET
SUITE A200
DENVER, CO 80265
303 295 1717 t
303 292 0845 f

NOTE: BENCHES TO HAVE #4 REBAR REINFORCING, 2" CLEAR FROM OUTSIDE FACES.

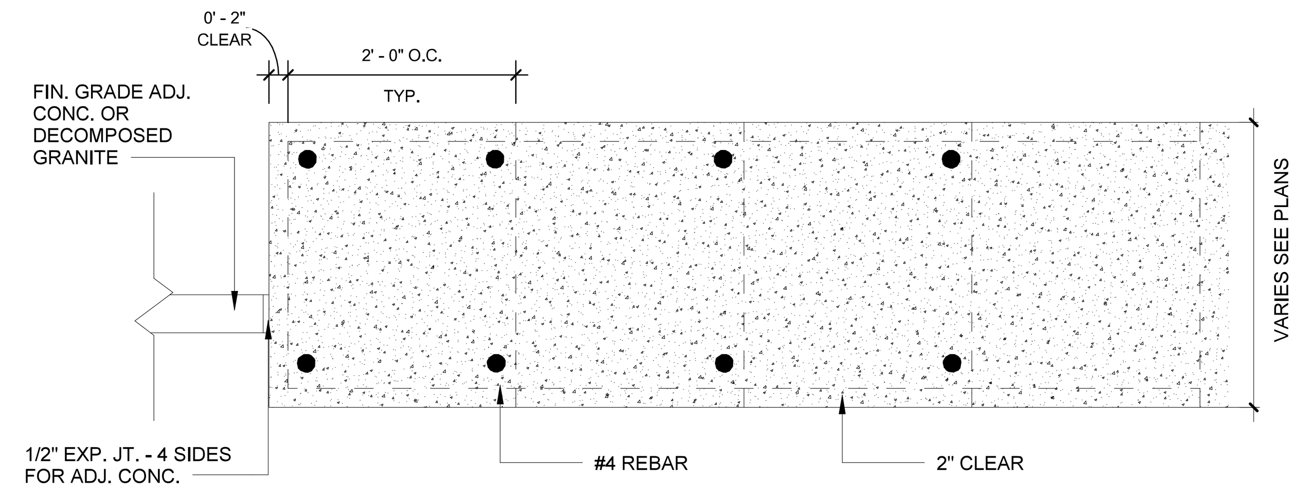

1 TYPICAL BENCH PLAN
3/4" = 1'-0"

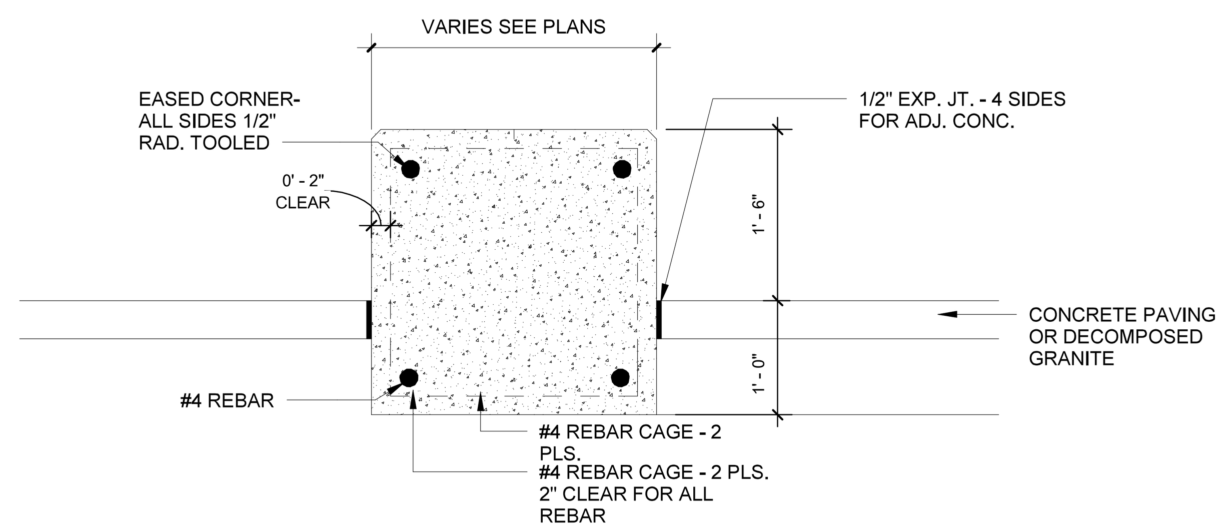

2 TYPICAL BENCH SECTION
3/4" = 1'-0"

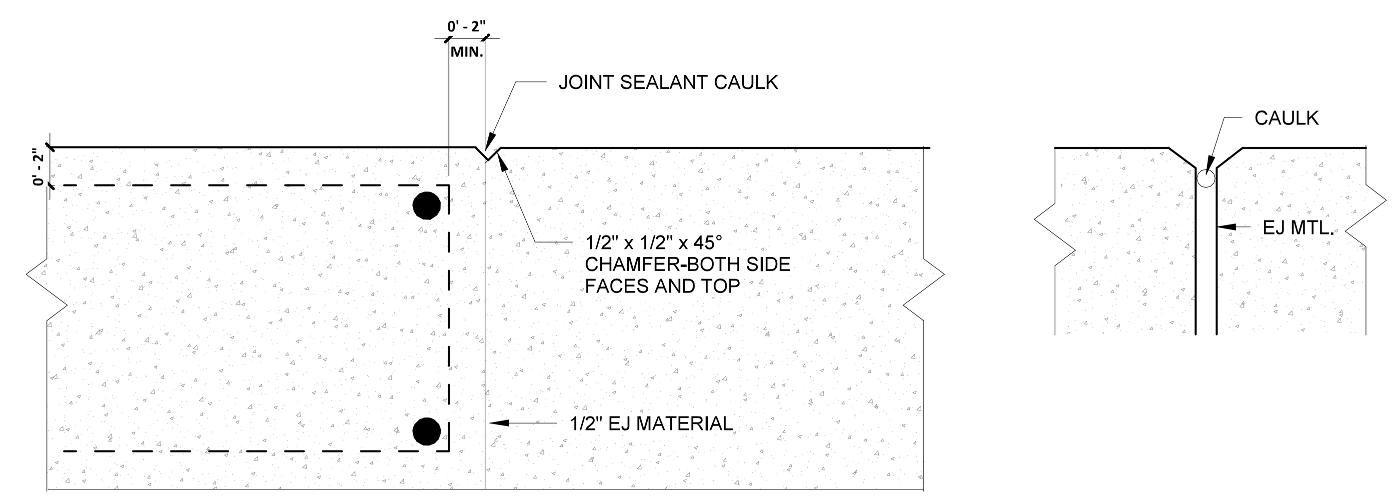

3 PLAN_TYPICAL BENCH EXPANSION JOINT
1 1/2" = 1'-0"

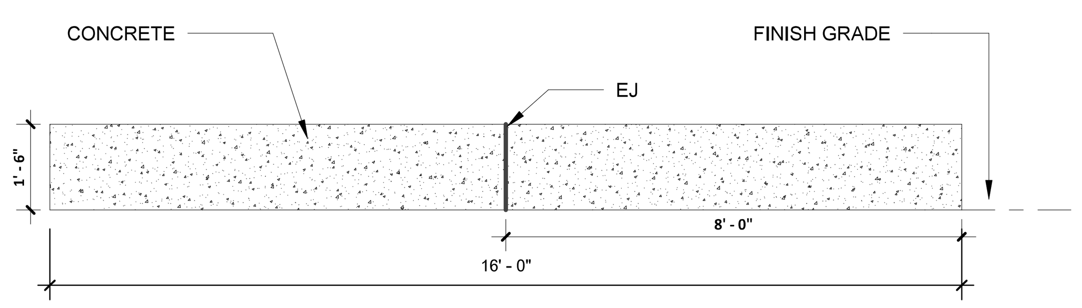

*SEE DETAILS FOR REINFORCEMENT

4 ELEVATION_BENCH TYPE - 6.1
3/8" = 1'-0"

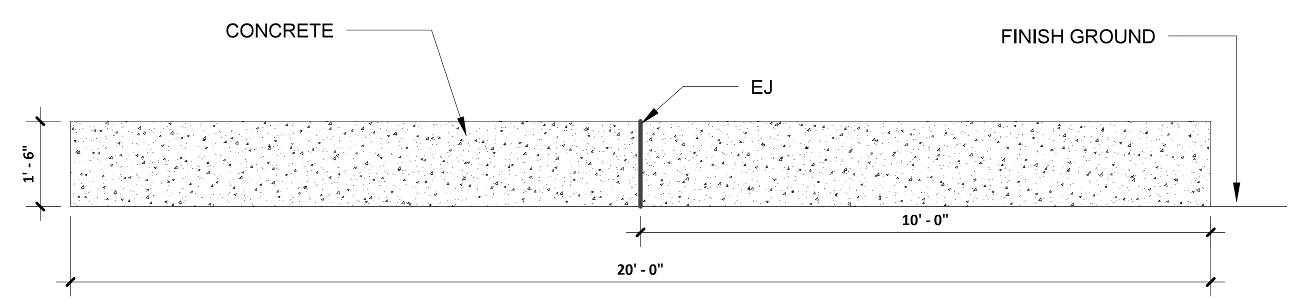

5 ELEVATION_BENCH TYPE - 6.2
3/8" = 1'-0"

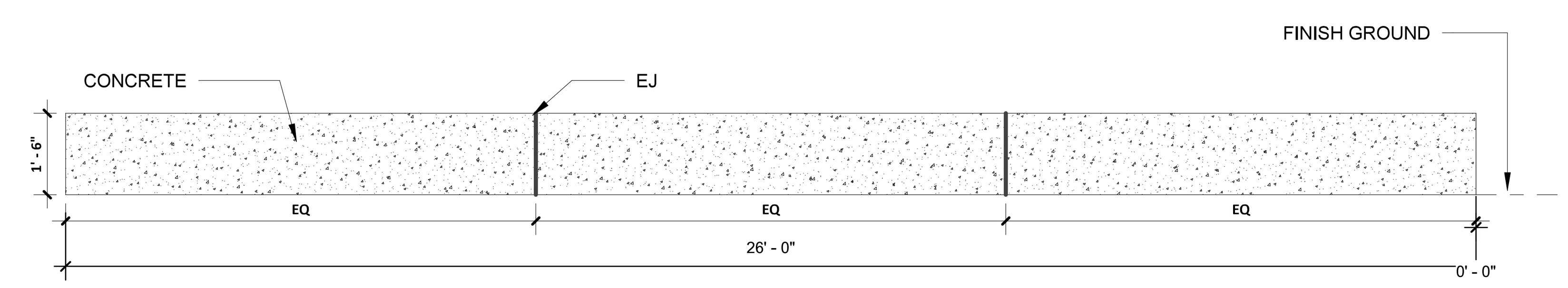

6 ELEVATION_BENCH TYPE - 6.3
3/8" = 1'-0"

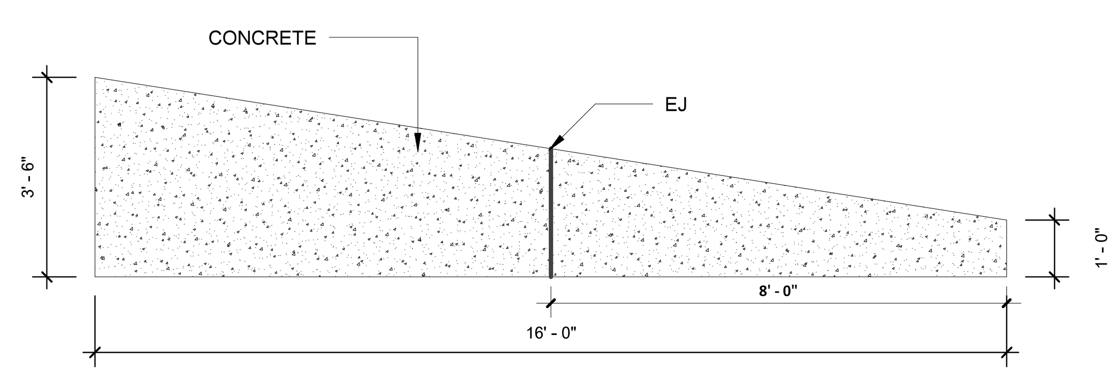

7 PLAN_BENCH TYPE - 6.1
3/8" = 1'-0"

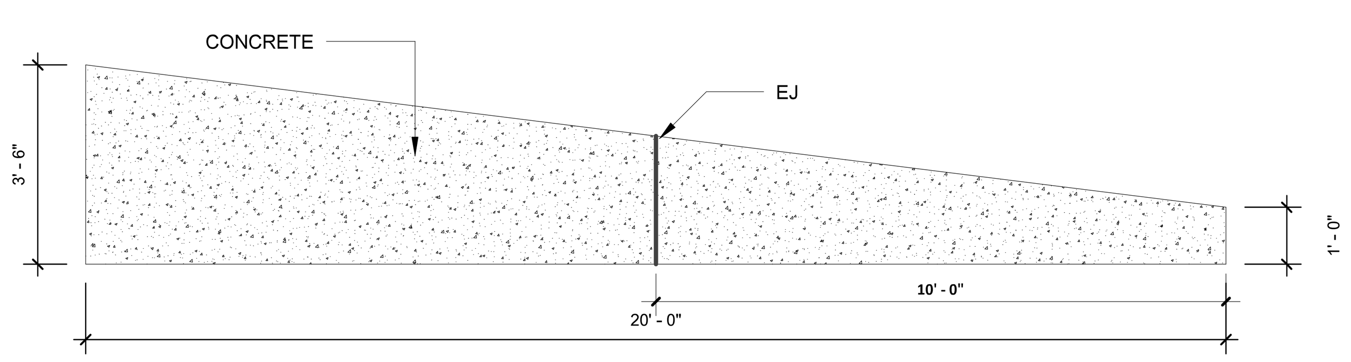

8 PLAN_BENCH TYPE - 6.2
3/8" = 1'-0"

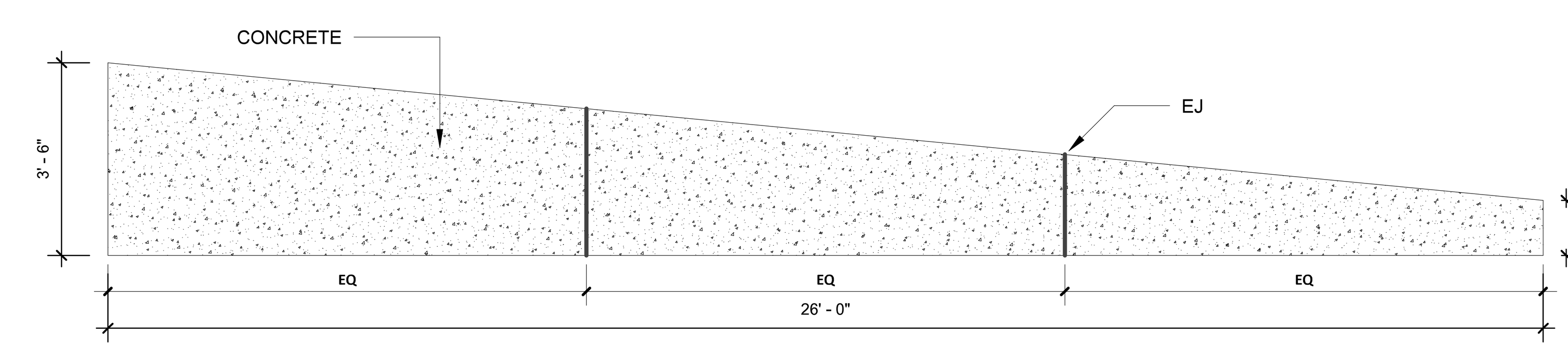

9 PLAN_BENCH TYPE - 6.3
3/8" = 1'-0"

RNL
1050 17th STREET
SUITE A200
DENVER, CO 80265
303 295 1717 t
303 292 0845 f

100% CONSTRUCTION DOCUMENTS

REFERENCES – BENCHMARKS

DATE | REVISIONS | BY

ARCHITECTS SEAL

100% CONSTRUCTION DOCUMENTS

SCALE
HOR: SHOWN
VER: SHOWN

DATE:
DESIGN BY: Designer
DRAWN BY: Author
CHKD. BY: Checker
APPD. BY: Approver

PROJECT NAME

NORTHGATE TRANSFER CENTER

EL PASO, TEXAS.

CITY OF EL PASO

CAPITAL IMPROVEMENT DEPARTMENT

THE CITY OF EL PASO TEXAS

SHEET TITLE

DETAILS

SHEET

L502

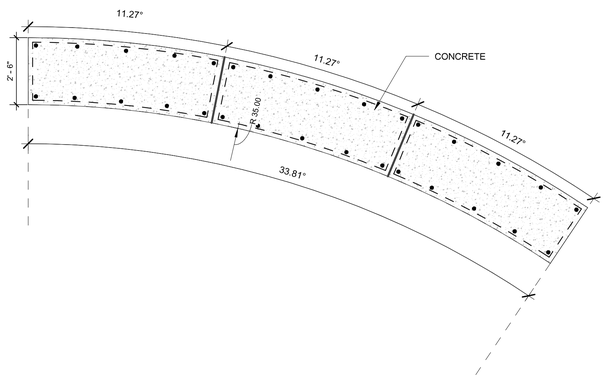

1 RADIAL BENCH TYPE - 6.5
3/8" = 1'-0"

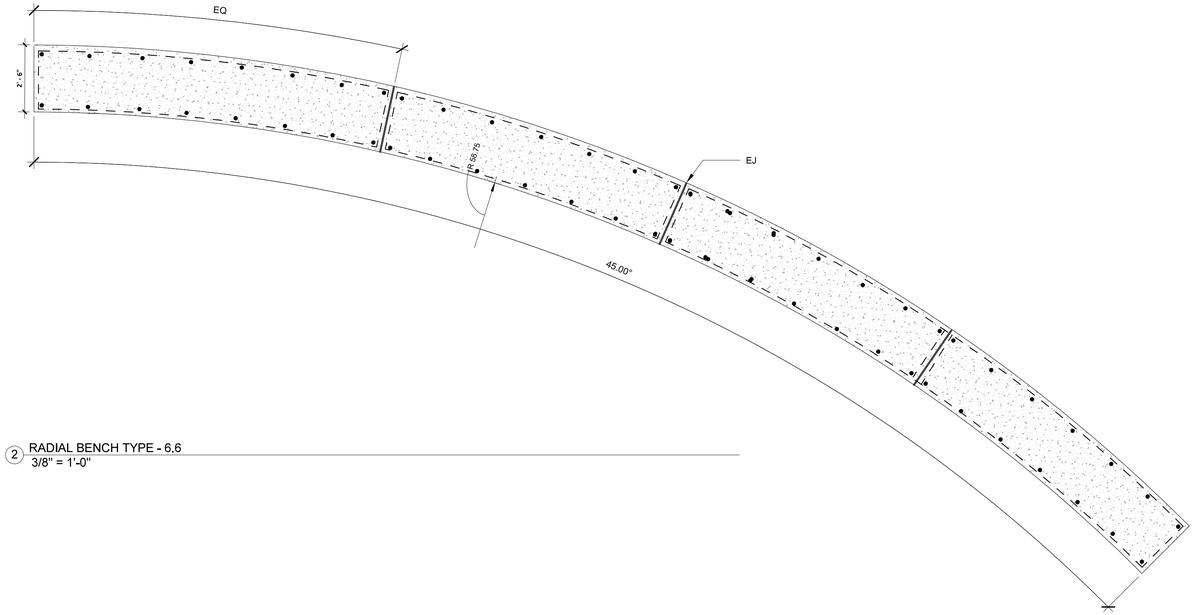

2 RADIAL BENCH TYPE - 6.6
3/8" = 1'-0"

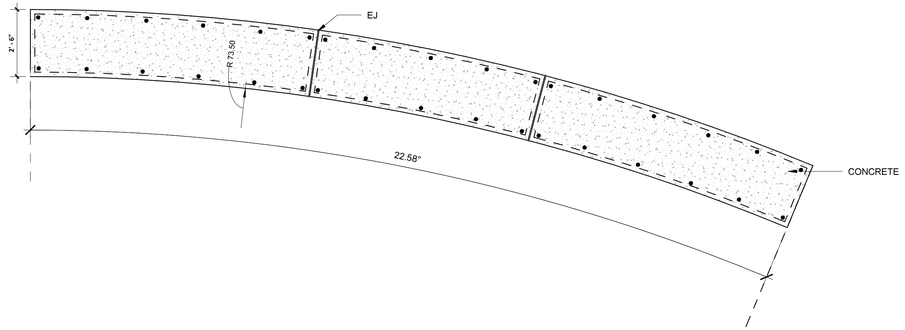

3 RADIAL BENCH TYPE - 6.7
3/8" = 1'-0"

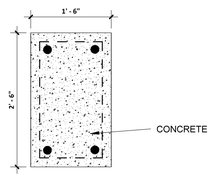

4 PLAN_RECTANGULAR BENCH TYPE - 6.8
3/4" = 1'-0"

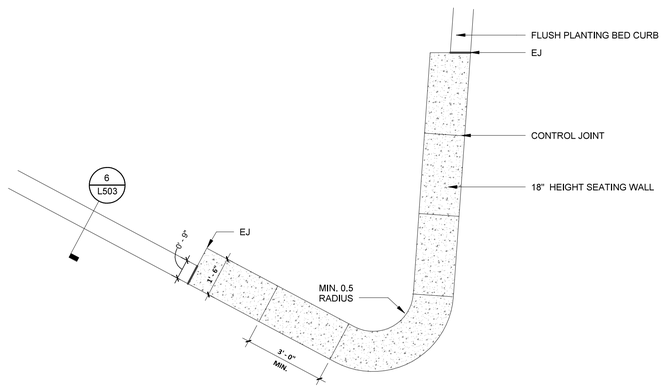

5 TYPICAL SEATING WALL
3/8" = 1'-0"

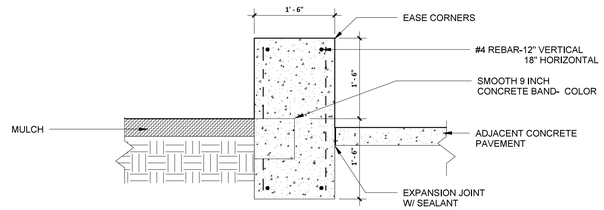

6 INTEGRAL PLATER SEAT WALL
3/4" = 1'-0"

REFERENCES – BENCHMARKS

REVISIONS

DATE		BY

ARCHITECTS SEAL

This item is released for construction
100% CONSTRUCTION DOCUMENTS

SCALE
HOR: SHOWN
VER: SHOWN

DATE 03/24/15
DESIGN BY Designer
DRAWN BY Author
CHKD BY Checker
APPD. BY Approver

PROJECT NAME

NORTHGATE TRANSFER CENTER

EL PASO, TEXAS.

CITY OF EL PASO

CAPITAL IMPROVEMENT DEPARTMENT

SHEET TITLE

DETAILS

SHEET
L503

RNL
1050 17th STREET
SUITE A200
DENVER, CO 80265
303 295 1717 t
303 292 0845 f

100% CONSTRUCTION DOCUMENTS

NOTES:
1. SEE SPECS FOR ENCING REQUIREMENTS.
2. DO NOT INLUDE 'RING' OR THIRD RAIL' OPTION
3. PROVIDE GATES AS SHOWN IN CIVIL PLANS

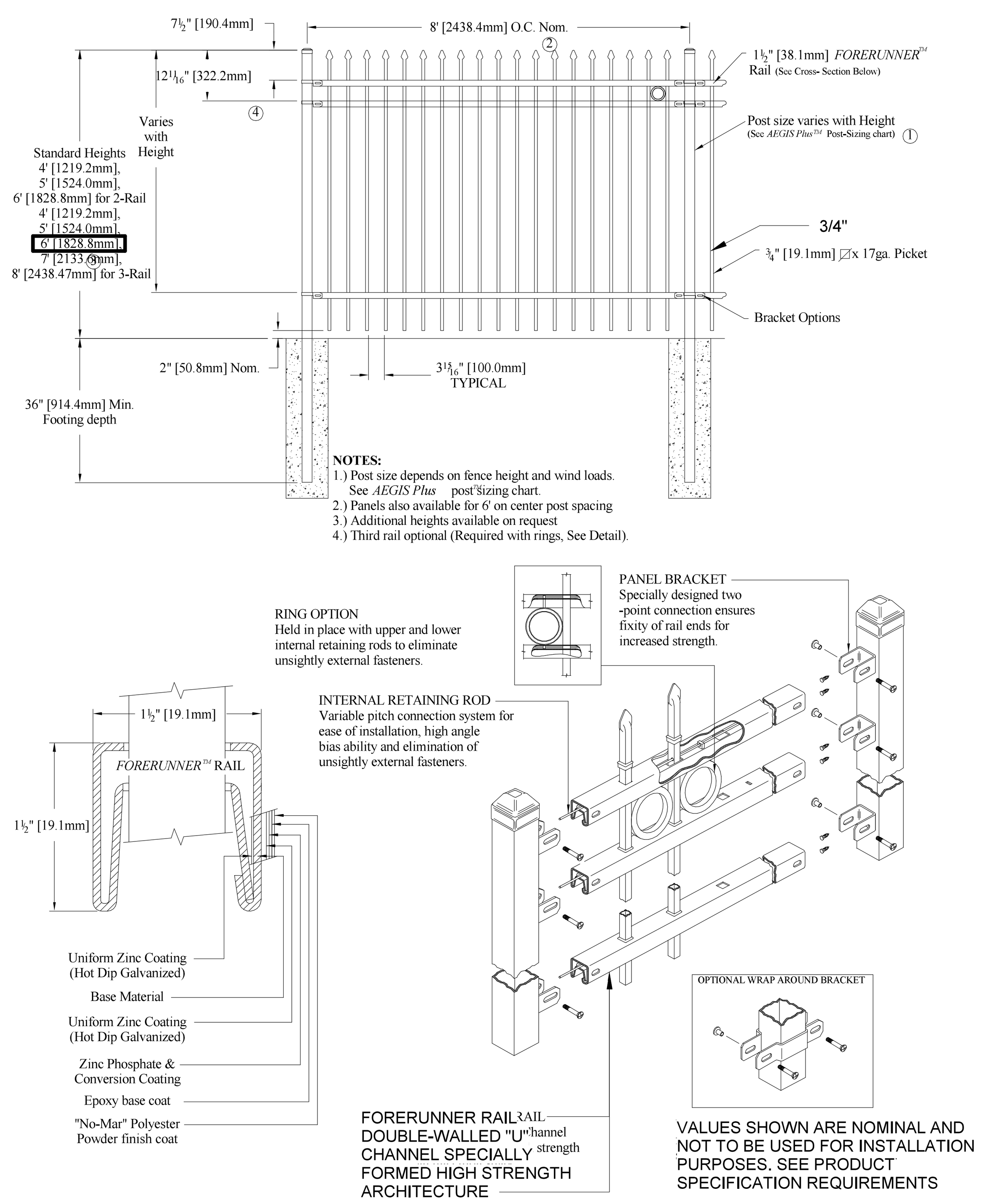

VALUES SHOWN ARE NOMINAL AND NOT TO BE USED FOR INSTALLATION PURPOSES. SEE PRODUCT SPECIFICATION REQUIREMENTS

1 STEEL FENCE_AEGIS II GENESIS 2/3 RAIL
3/8" = 1'-0"

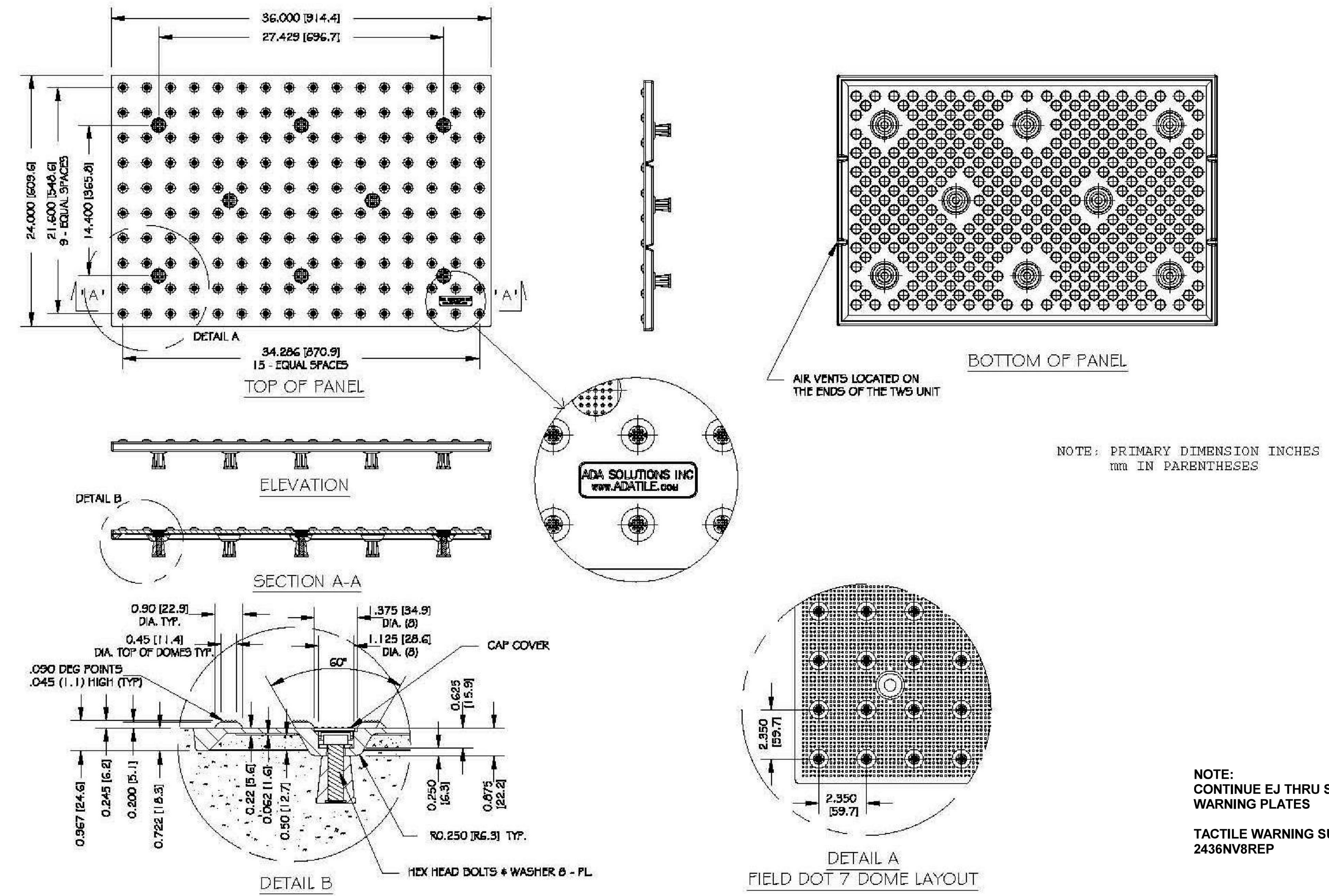

NOTE:
CONTINUE EJ THRU SLAB UNER TACTILE WARNING PLATES

TACTILE WARNING SURFACE
2436NV8REP

MANUFACTURER: ADA SOLUTIONS INC.

2 TACTILE WARNING STRIP
3/8" = 1'-0"

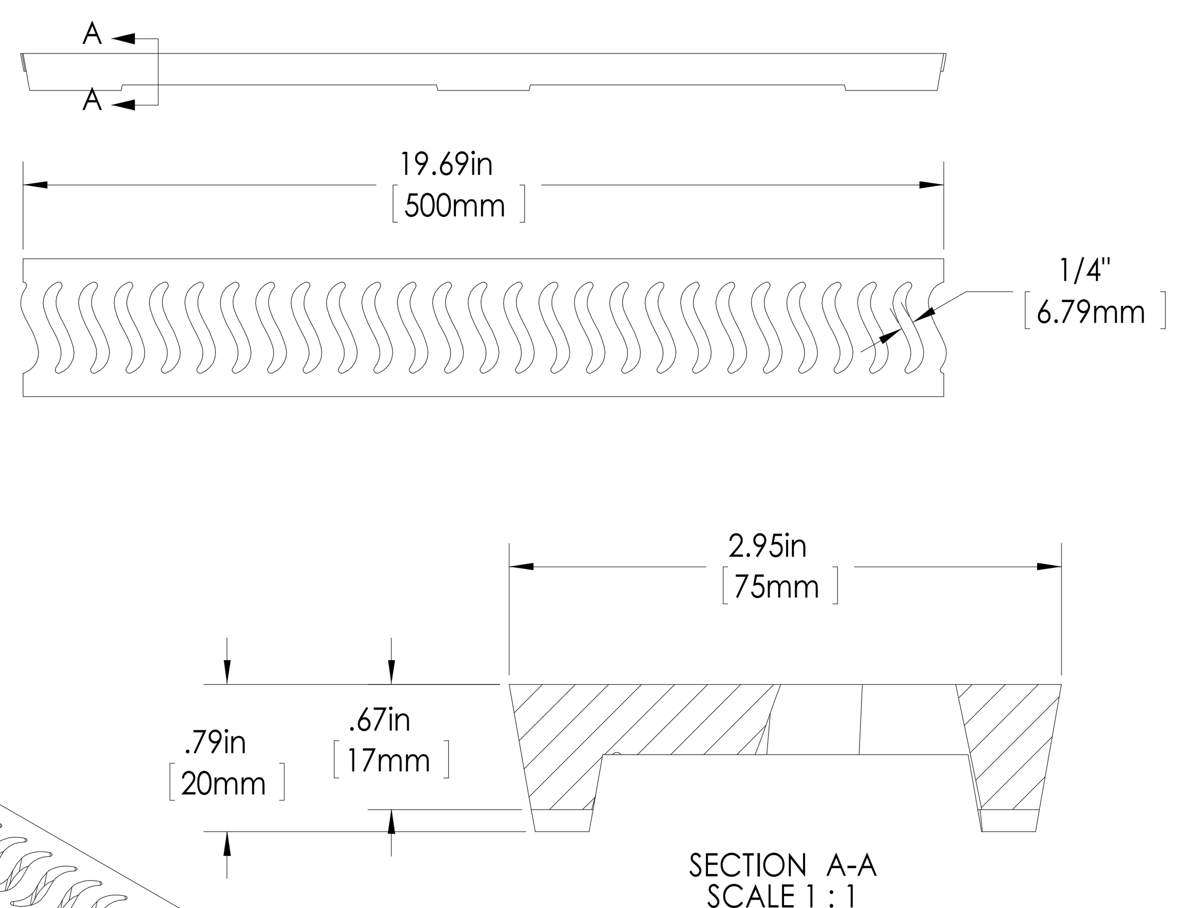

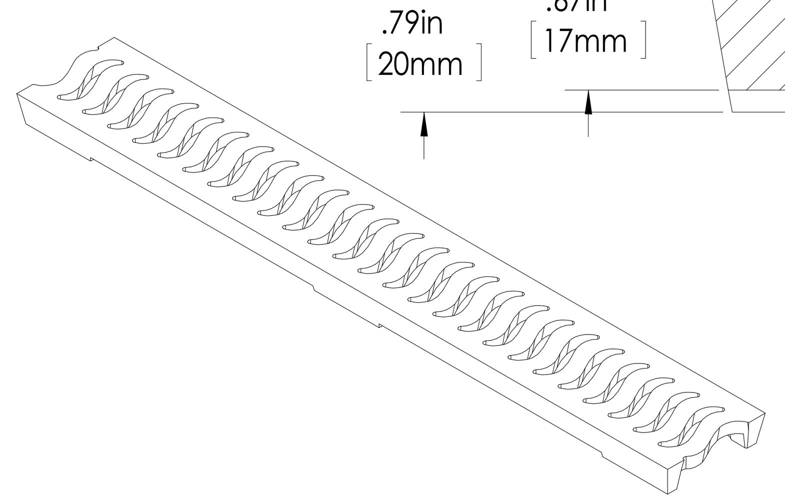

CUSTOM TRENCH GRATE

TRENCH GRATE PEDESTRIAN LOADS ONLY

1/4" MAX. SLOT OPENING FOR A.D.A. COMPLIANCE

MANUFACTURER: IRONMSITH-SEE SPECS

3 CUSTOM TRENCH GRATE TOP
3/8" = 1'-0"

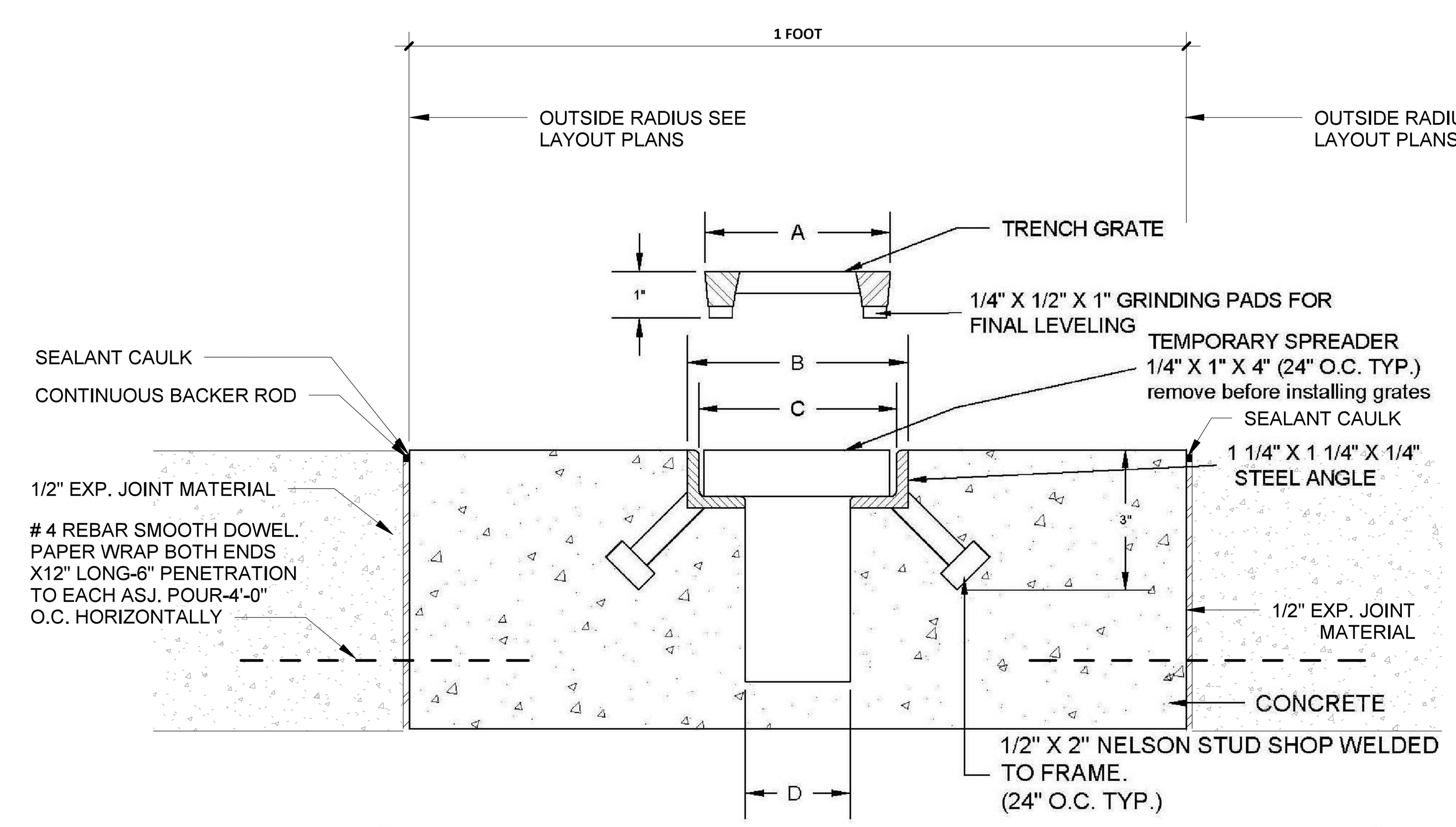

A		B		C		D		Catalog#
Standard	Metric	Standard	Metric	Standard	Metric	Standard	Metric	
4"	102mm	4 5/8"	117mm	4 1/8"	105mm	2 1/8"	54mm	9000F-4
6"	152mm	6 5/8"	168mm	6 1/8"	156mm	4 1/8"	105mm	9000F-6
8"	203mm	8 5/8"	219mm	8 1/8"	206mm	6 1/8"	156mm	9000F-8
12"	305mm	12 5/8"	321mm	12 1/8"	308mm	10 1/8"	257mm	9000F-12
18"	457mm	18 5/8"	473mm	18 1/8"	460mm	16 1/8"	410mm	9000F-18

9000-X PEDESTRIAN TRENCH GRATE FRAME DETAIL #1

INSTALLATION NEW CONCRETE

1. FINISHING OPTIONS: NO FINISH

2. TEMPORARY SPREADER BARS ARE TACK WELDED TO FRAMES AND MUST BE REMOVED AFTER FRAMES ARE SET AND CONCRETE HAS CURED

3.FRAMES ARE MADE IN SECTIONS SUCH THAT NO LENGTH IS GREATER THAN 10 FT OR SHOOTER THAN 24 INCHES.

4.MANUFACTURER: IRONSMITH SEE SPECS.

5. FRAME AND GRATE TO BE CUSTOM-RADIAL AS SHOWN ON PLANS

4 CUSTOM TRENCH GRATE
3/8" = 1'-0"

RNL
1050 17th STREET
SUITE A200
DENVER, CO 80265
303 295 1717 t
303 292 0845 f

100% CONSTRUCTION DOCUMENTS

REFERENCES – BENCHMARKS

DATE | REVISIONS | BY

ARCHITECTS SEAL

SCALE
HOR: SHOWN
VER: SHOWN

DATE: 05/24/16
DESIGN BY: Designer
DRAWN BY: Author
CHKD. BY: Checker
APPD. BY: Approver

PROJECT NAME

NORTHGATE TRANSFER CENTER

EL PASO, TEXAS.

CITY OF EL PASO

CAPITAL IMPROVEMENT DEPARTMENT

SHEET TITLE

DETAILS

SHEET

L504

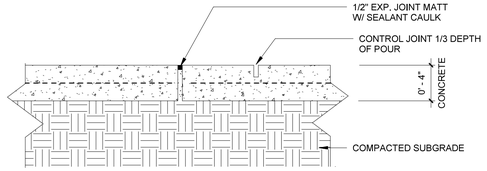

NOTE:
SEE CIVIL

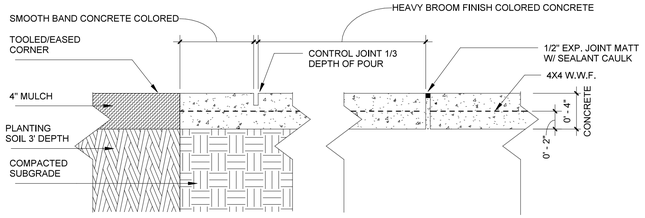

NOTE:
BAND AND ADJACENT CONCRETE ARE
A MONOLITHIC POUR - COLORED

SEE CIVIL FOR GRADING

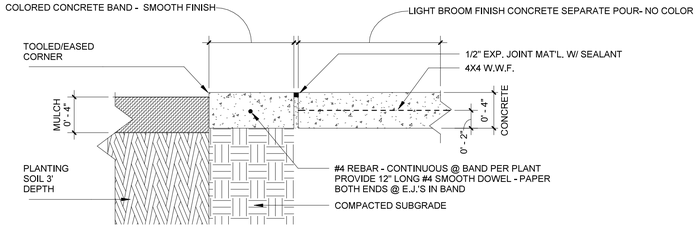

NOTE:
SEE CIVIL

1 SECTION_EXPANSION & CONTROL JOINT
1 1/2" = 1'-0"

2 SECTION _ CONCRETE AT PLANTER
1 1/2" = 1'-0"

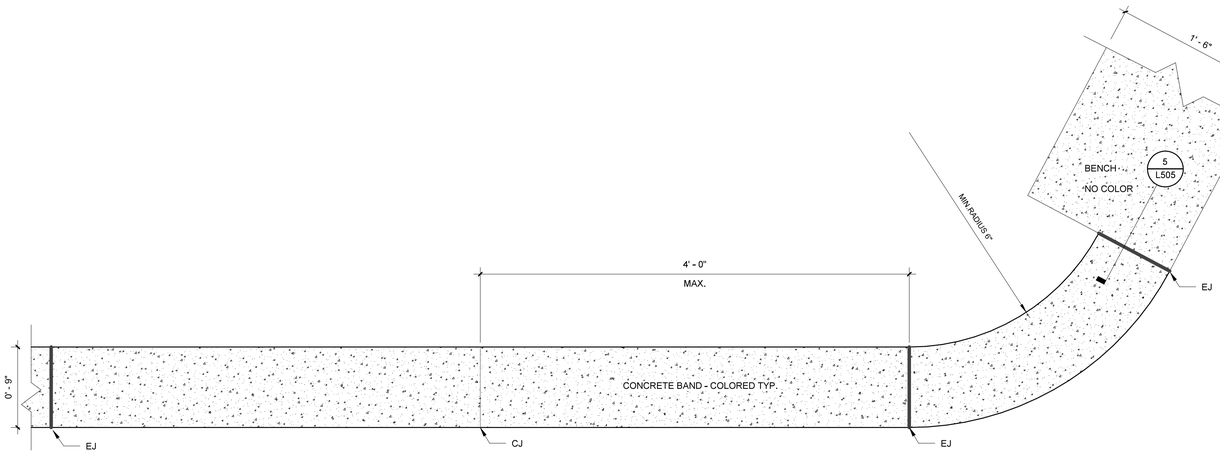

4 PLAN _BENCH AT CONCRETE BAND
1 1/2" = 1'-0"

3 SECTION_FREE STANDING BAND (SEPARATE POUR)
1 1/2" = 1'-0"

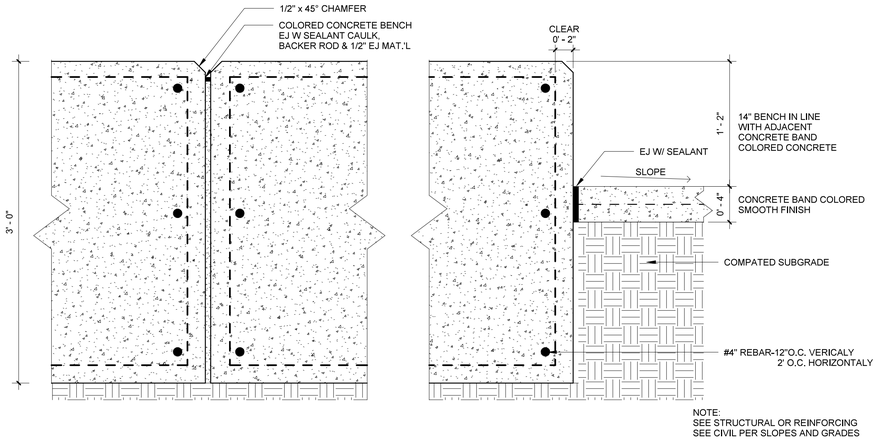

NOTE:
SEE STRUCTURAL OR REINFORCING
SEE CIVIL PER SLOPES AND GRADES

5 SECTION _BENCH AT CONCRETE BAND
1 1/2" = 1'-0"

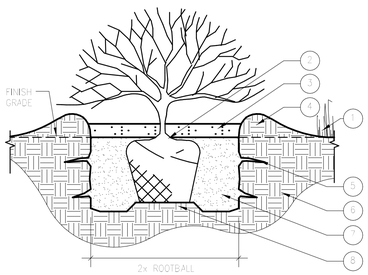

1. ADJACENT PLANTING AREA
2. INSTALL ROOTBALL 1" ABOVE FINISH GRADE
3. 4" WOOD MULCH RING
4. SOIL SAUCER – USE PREPARED TOPSOIL, 6" MINIMUM – TO BE GRADED CONSISTENTLY WITH SURROUNDING GRADE PRIOR TO MULCHING
5. SCARIFY SOIL
6. UNCOMPACTED SUBGRADE
7. BACKFILL MIX
8. 2" PREPARED SOIL PEDESTAL TO PREVENT SETTLING

6 SHRUB PLANTING DETAIL
3/4" = 1'-0"

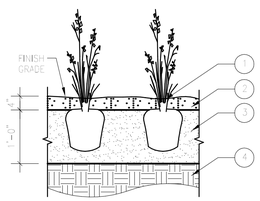

1. PERENNIAL PLANTS AND GRASSES
2. MULCH, 4" NOMINAL DEPTH
3. PLANTING MIX 12" MIN. DEPTH
4. SUBGRADE

NOTE: PLANTS TO BE PLACED ACCORDING TO PLANT LAYOUT PLANS AND LOCATIONS TO BE APPROVED ON-SITE BY LANDSCAPE ARCHITECT PRIOR TO DIGGING AND PLANTING

7 PERENNIAL PLANTING DETAIL
3/4" = 1'-0"

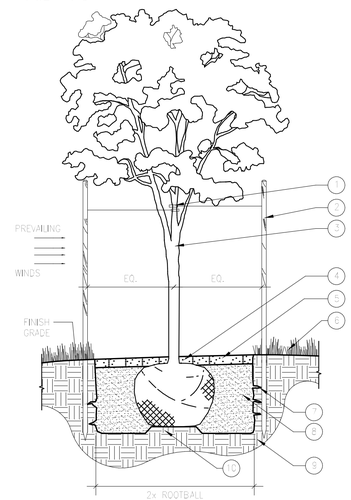

1. TREE-TIE WEBBING AND DOUBLE STRAND GUYING WIRE OR APPROVED EQUAL – ATTACH TO CENTRAL LEADER ABOVE FIRST BRANCHES
2. 2" DIAMETER LODGEPOLE PINE STAKE – COPPER NAPTHENATE TREATED; MIN. OF 2 STAKES PER TREE, SEE SPECS
3. TREE – CENTRAL LEADER
4. INSTALL ROOTBALL 2" ABOVE FINISH GRADE
5. 4" WOOD MULCH RING, RE: SPECS
6. PLANTING AREA – RE: SITE LAYOUT PLANS
7. SCARIFY SOIL
8. BACKFILL MIX – RE: SPECS
9. UNCOMPACTED SUBGRADE
10. 3" PREPARED SOIL PEDESTAL TO PREVENT SETTLING

8 TREE PLANTING DETAIL
3/8" = 1'-0"

100% CONSTRUCTION DOCUMENTS

RNL
1050 17th STREET
SUITE A200
DENVER, CO 80265
303 295 1717 t
303 292 0845 f

REFERENCES – BENCHMARKS

BY	REVISIONS	DATE

ARCHITECT'S SEAL

This item is released for interim review purposes only. It is not intended for construction, bidding or permit purposes.
100% CONSTRUCTION DOCUMENTS

SCALE
HOR: AsDrawn
VER: AsDrawn

DATE 02/24/15
DESIGN BY Designer
DRAWN BY Author
CHKD BY Principal
APPD. BY Approver

PROJECT NAME
NORTHGATE TRANSFER CENTER
EL PASO, TEXAS.

CITY OF EL PASO
CAPITAL IMPROVEMENT DEPARTMENT

SHEET TITLE
DETAILS

SHEET
L505

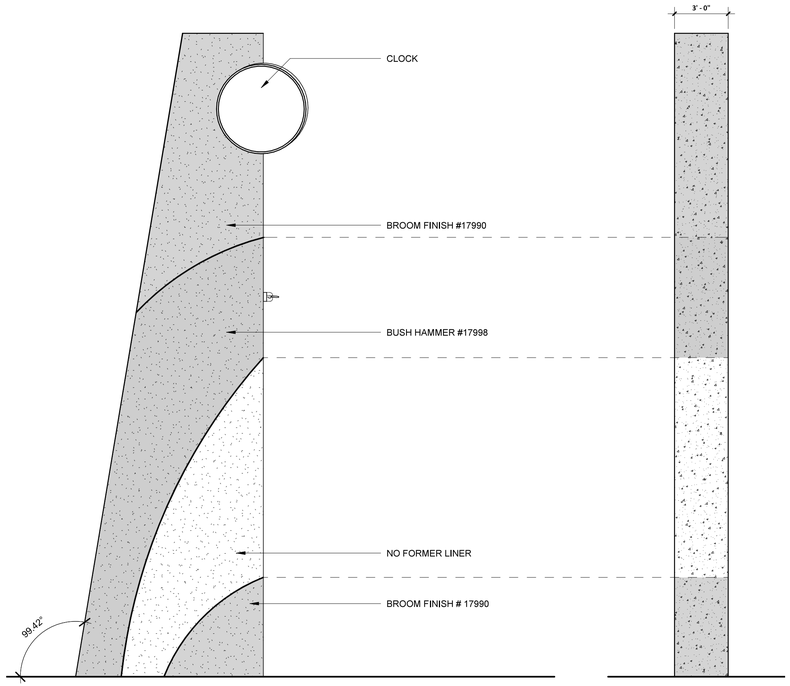

1 DEDUCTIVE ALTERNATE 01 - CLOCK TOWER ELEVATION
1/4" = 1'-0"

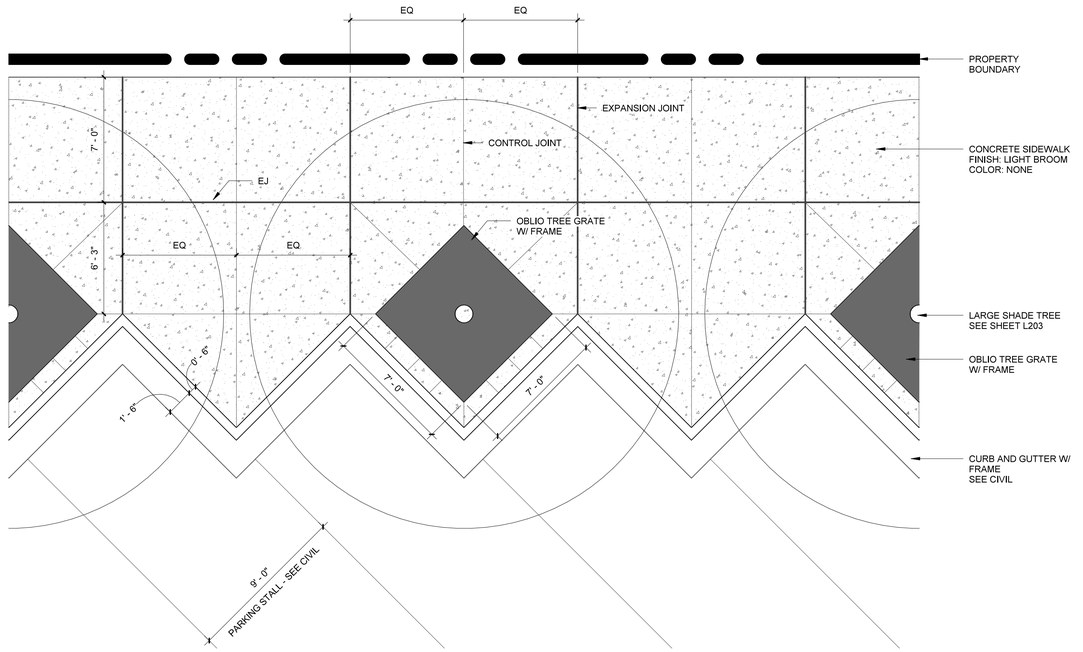

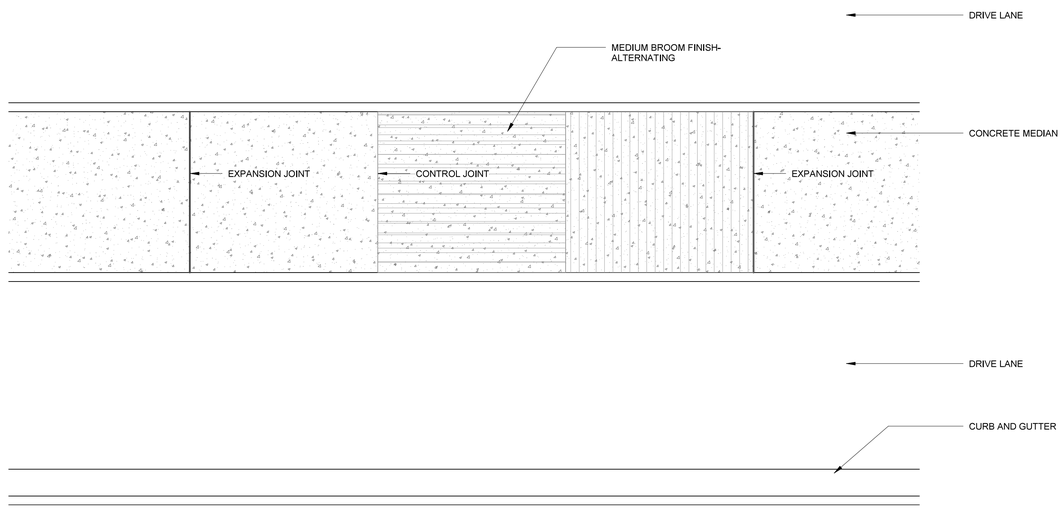

2 MAIN STREET SIDEWALK DETAIL
1/4" = 1'-0"

100% CONSTRUCTION DOCUMENTS

RNL
1050 17th STREET
SUITE A200
DENVER, CO 80265
303 295 1717 t
303 292 0845 f

REFERENCES – BENCHMARKS

BY	REVISIONS	DATE

ARCHITECT'S SEAL

JAMES WILLIAM LITTLE
LICENSED ARCHITECT
STATE OF TEXAS
Jim Little
THIS DOCUMENT IS RELEASED FOR THE PURPOSE OF INTERIM REVIEW UNDER THE AUTHORITY OF JAMES W. LITTLE, TEXAS REG. NO. 18183. IT IS NOT TO BE USED FOR BIDDING OR CONSTRUCTION PURPOSES.

100% CONSTRUCTION DOCUMENTS

SCALE
HOR: SHOWN
VER: SHOWN

DATE 03/24/15
DESIGN BY Designer
DRAWN BY Author
CHKD BY Principal
APPD BY Approver

PROJECT NAME

NORTHGATE TRANSFER CENTER

EL PASO, TEXAS.

CITY OF EL PASO

CAPITAL IMPROVEMENT DEPARTMENT

SHEET TITLE

DETAILS

SHEET
L506

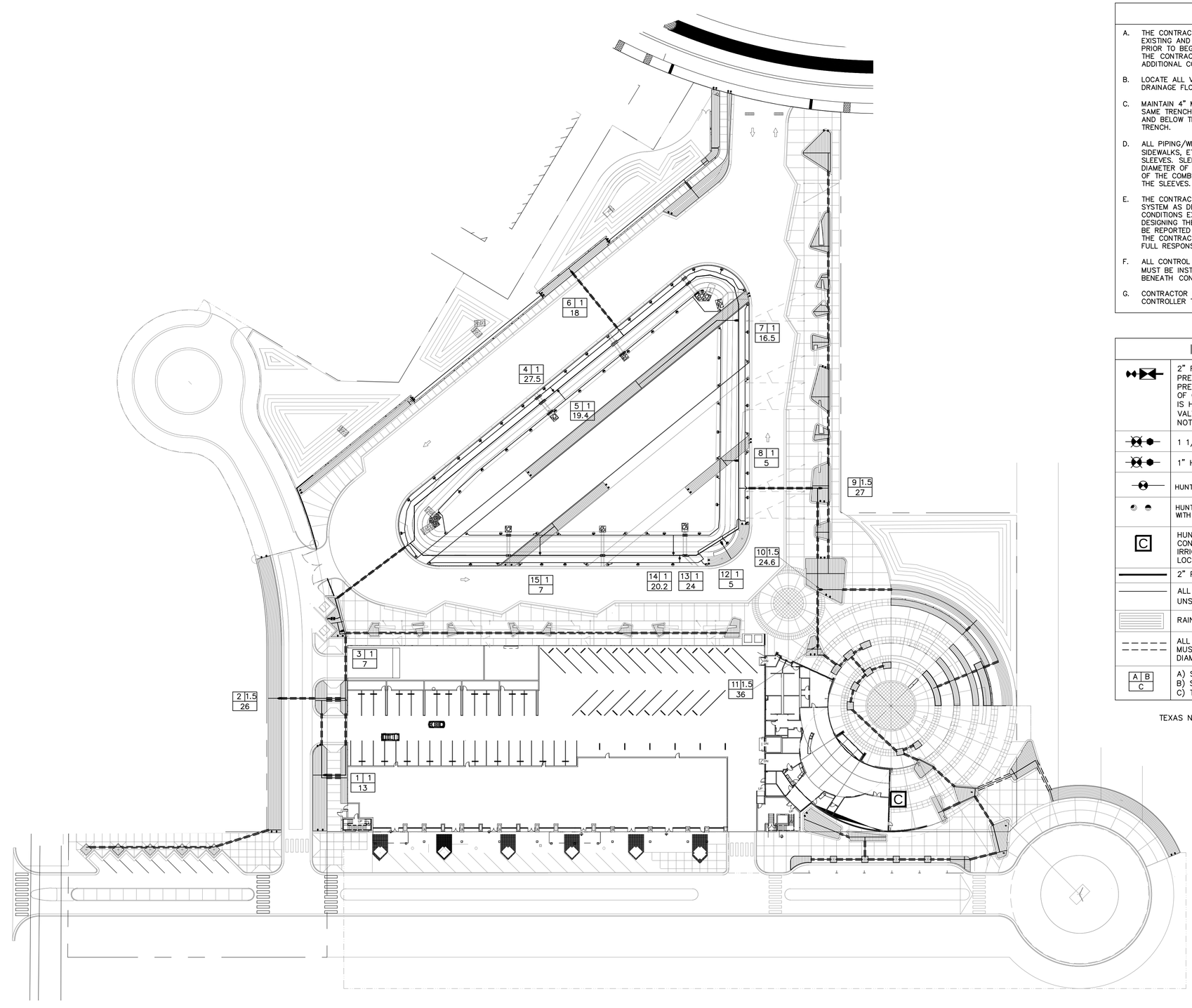

OVERALL IRRIGATION PLAN
1" = 40'-0"

GENERAL NOTES

A. THE CONTRACTOR SHALL VERIFY THE EXACT LOCATION OF ALL EXISTING AND PROPOSED UTILITIES AND ALL SITE CONDITIONS PRIOR TO BEGINNING CONSTRUCTION. ANY DAMAGE CAUSED BY THE CONTRACTOR SHALL BE REPAIRED OR REPLACED AT NO ADDITIONAL COST TO THE OWNER.

B. LOCATE ALL VALVES AWAY FROM LOW SPOTS OR AREAS OF DRAINAGE FLOW.

C. MAINTAIN 4" MINIMUM CLEARANCE BETWEEN PIPE RUNNING IN THE SAME TRENCH. CONTROL WIRE SHALL ALWAYS BE TO THE SIDE AND BELOW THE TOP OF THE PIPE RUNNING IN THE SAME TRENCH.

D. ALL PIPING/WIRING RUNNING BENEATH PAVED SURFACES (DRIVES, SIDEWALKS, ETC.) SHALL BE INSTALLED IN CLASS 200 PVC SLEEVES. SLEEVES SHALL BE OF THE SIZE SO THAT THE INSIDE DIAMETER OF THE SLEEVE IS 2 PIPE SIZES GREATER THAN THAT OF THE COMBINED OUTER DIAMETER OF ALL ITEMS INSTALLED IN THE SLEEVES.

E. THE CONTRACTOR WILL NOT WILLFULLY INSTALL THE IRRIGATION SYSTEM AS DESIGNED, WHEN IT IS OBVIOUS THAT FIELD CONDITIONS EXIST, THAT WERE NOT CONSIDERED AT TIME OF DESIGNING THE SYSTEM. ANY CONDITIONS NOTED AS SUCH, SHALL BE REPORTED TO THE ARCHITECT AND IRRIGATION DESIGNER. IF THE CONTRACTOR FAILS TO DO SO, THE CONTRACTOR ASSUMES FULL RESPONSIBILITY FOR ANY CORRECTIONS NEEDED.

F. ALL CONTROL WIRING FROM THE VALVES TO THE CONTROLLER MUST BE INSTALLED IN A 1" PVC CONDUIT PIPE IF BURIED BENEATH CONCRETE OR ASPHALT SURFACES.

G. CONTRACTOR IS RESPONSIBLE FOR CONNECTING AUTOMATIC CONTROLLER TO ELECTRICITY.

IRRIGATION LEGEND

	2" FEBCO 825Y REDUCED PRESSURE BACKFLOW PREVENTER. USE WITH 2" WILKINS MODEL 600C PRESSURE REDUCING VALVE ON THE DOWNSTREAM SIDE OF COPPER LINE OF BACKFLOW ASSEMBLY IF PRESSURE IS HIGHER THAN 100 PSI. INSTALL 2" BRASS BALL VALVE IN A 10" ROUND VALVE BOX IF YARD METER IS NOT USED
	1 1/2" HUNTER ICZ-151-40 REMOTE CONTROL VALVE
	1" HUNTER ICZ-101-40 REMOTE CONTROL VALVE
	HUNTER ICV-151G-1 1/2" REMOTE CONTROL VALVE OR EQUAL
	HUNTER PROS-12 POP-UPS WITH MP-ROTATOR, MP3000'S WITH HUNTER SWING JOINT KIT, MODEL #SJ-512
C	HUNTER IC-18 STATION ELECTRIC CONTROLLER. CONTROLLER TO BE LOCATED NEXT TO HOUSE PANEL. IRRIGATOR MUST SEE GENERAL CONTRACTOR FOR EXACT LOCATION OF HOUSE PANEL.
	2" PVC, CLASS 200, MAIN LINE, SIZED ON PLAN.
	ALL PIPE TO BE PVC, CLASS 200, SIZED ON PLAN. UNSIZED PIPE TO BE 3/4".
	RAINBIRD SUBSURFACE TUBING WITH COPPER SHIELD
	ALL LATERALS UNDER CONCRETE OR PAVED SURFACES MUST BE ENCASED IN A PVC SLEEVE 2 TIMES PIPE DIAMETER. USE CLASS 200 PIPE.
A B / C	A) STATION NUMBER B) SIZE OF VALVE IN INCHES C) TOTAL GPM

IRRIGATION IS REGULATED BY
TEXAS NATURAL RESOURCE CONSERVATION COMMISSION,
P.O. BOX 13087,
AUSTIN TEXAS 78711-3087.

Patricia Garcia

STATE OF TEXAS
PATRICIA GARCIA
1674.3
LICENSED IRRIGATOR

FEBRUARY 04, 2016

PRACTICAL SOLUTIONS
LANDSCAPE & IRRIGATION DESIGN
5505 ROSA, SUITE B
EL PASO, TEXAS 79905
915-252-7845
practicaldesigns@sbcglobal.net

02/04/2016 10:45PM C:\Users\Owner\Google Drive\Public\ExigoArchitects-Pachelli\2015\Northgate Transfer Center\NORTHGATETRANSFER IRRIGATION PLAN.DWG

REFERENCES - BENCHMARKS

DATE	REVISIONS	BY

ARCHITECTS SEAL

PREFINAL DESIGN PHASE NOT FOR CONSTRUCTION

SCALE
HOR. SHOWN
VER. SHOWN
DATE 1/20/15
DESIGN BY FB
DRAWN BY FB
CHKD. BY JAR
APPD. BY JAR

PROJECT NAME

NORTHGATE TRANSFER CENTER

EL PASO, TEXAS.

CITY OF EL PASO
CAPITAL IMPROVEMENT DEPARTMENT

SHEET TITLE

IRRIGATION PLAN

SHEET
IR-1

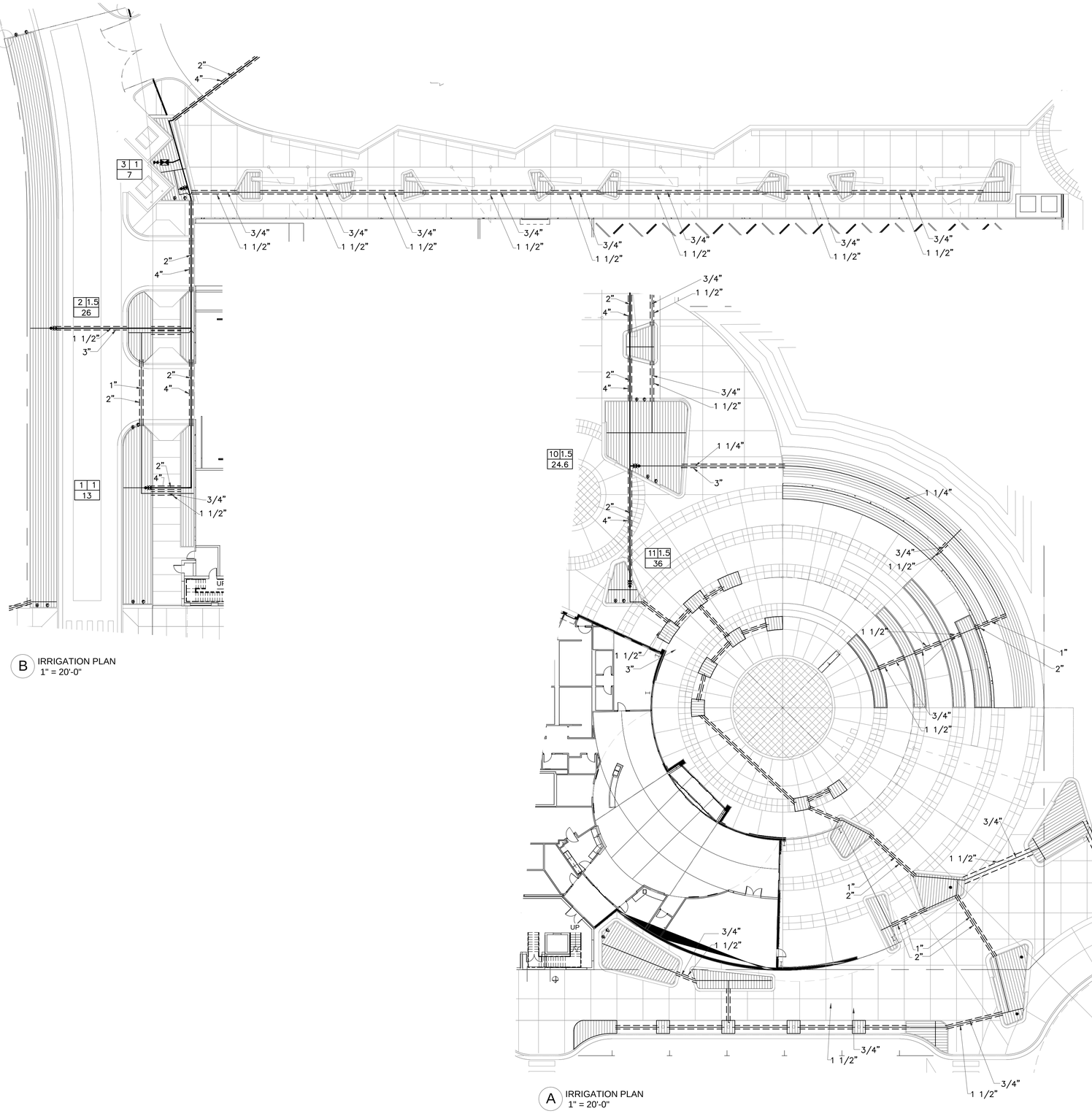

B IRRIGATION PLAN
1" = 20'-0"

A IRRIGATION PLAN
1" = 20'-0"

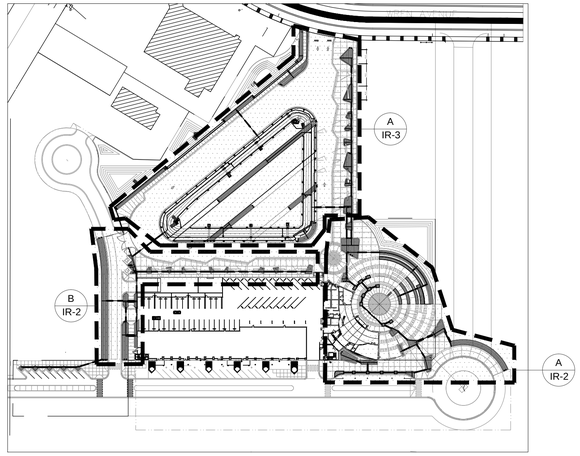

KEY PLAN
N.T.S.

IRRIGATION LEGEND

	2" FEBCO 825Y REDUCED PRESSURE BACKFLOW PREVENTER. USE WITH 2" WILKINS MODEL 600C PRESSURE REDUCING VALVE ON THE DOWNSTREAM SIDE OF COPPER LINE OF BACKFLOW ASSEMBLY IF PRESSURE IS HIGHER THAN 100 PSI. INSTALL 2" BRASS BALL VALVE IN A 10" ROUND VALVE BOX IF YARD METER IS NOT USED
	1 1/2" HUNTER ICZ-151-40 REMOTE CONTROL VALVE
	1" HUNTER ICZ-101-40 REMOTE CONTROL VALVE
	HUNTER ICV-151G-1 1/2" REMOTE CONTROL VALVE OR EQUAL
	HUNTER PROS-12 POP-UPS WITH MP-ROTATOR, MP3000'S WITH HUNTER SWING JOINT KIT, MODEL #SJ-512
C	HUNTER IC-18 STATION ELECTRIC CONTROLLER. CONTROLLER TO BE LOCATED NEXT TO HOUSE PANEL. IRRIGATOR MUST SEE GENERAL CONTRACTOR FOR EXACT LOCATION OF HOUSE PANEL.
	2" PVC, CLASS 200, MAIN LINE, SIZED ON PLAN.
	ALL PIPE TO BE PVC, CLASS 200, SIZED ON PLAN. UNSIZED PIPE TO BE 3/4".
	RAINBIRD SUBSURFACE TUBING WITH COPPER SHIELD
	ALL LATERALS UNDER CONCRETE OR PAVED SURFACES MUST BE ENCASED IN A PVC SLEEVE 2 TIMES PIPE DIAMETER. USE CLASS 200 PIPE.
A | B / C	A) STATION NUMBER B) SIZE OF VALVE IN INCHES C) TOTAL GPM

IRRIGATION IS REGULATED BY
TEXAS NATURAL RESOURCE CONSERVATION COMMISSION,
P.O. BOX 13087,
AUSTIN TEXAS 78711-3087.

Patricia Garcia
STATE OF TEXAS
PATRICIA GARCIA
16743
LICENSED IRRIGATOR

FEBRUARY 04, 2016

PRACTICAL SOLUTIONS
LANDSCAPE & IRRIGATION DESIGN
5505 ROSA, SUITE B
EL PASO, TEXAS 79905
915-252-7845
practicaldesigns@sbcglobal.net

02/04/2016 10:46PM C:\Users\Owner\Google Drive\Public\ExigoArchitects-Pachelli\2015\Northgate Transfer Center\NORTHGATETRANSFER IRRIGATION PLAN.DWG

REFERENCES -- BENCHMARKS

DATE	REVISIONS	BY

ARCHITECTS SEAL

PREFINAL DESIGN PHASE NOT FOR CONSTRUCTION

SCALE
HOR. SHOWN
VER. SHOWN

DATE	1/20/15
DESIGN BY	FSI
DRAWN BY	FSI
CHKD. BY	JAS
APPD. BY	JAS

PROJECT NAME
NORTHGATE TRANSFER CENTER

EL PASO, TEXAS.

CITY OF EL PASO
CAPITAL IMPROVEMENT DEPARTMENT

SHEET TITLE
ENLARGED IRRIGATION PLANS

SHEET
IR-2

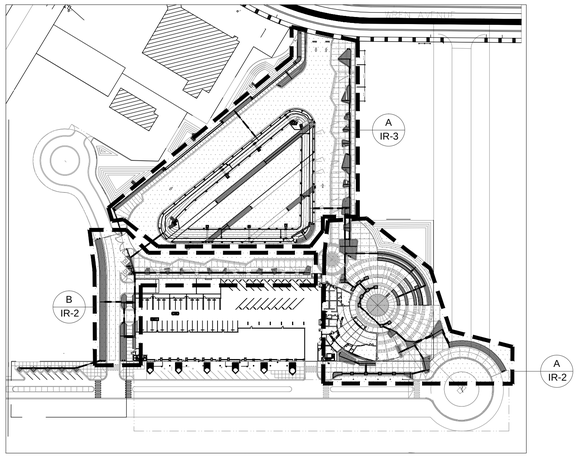

KEY PLAN
N.T.S.

IRRIGATION LEGEND

	2" FEBCO 825Y REDUCED PRESSURE BACKFLOW PREVENTER. USE WITH 2" WILKINS MODEL 600C PRESSURE REDUCING VALVE ON THE DOWNSTREAM SIDE OF COPPER LINE OF BACKFLOW ASSEMBLY IF PRESSURE IS HIGHER THAN 100 PSI. INSTALL 2" BRASS BALL VALVE IN A 10" ROUND VALVE BOX IF YARD METER IS NOT USED
	1 1/2" HUNTER ICZ-151-40 REMOTE CONTROL VALVE
	1" HUNTER ICZ-101-40 REMOTE CONTROL VALVE
	HUNTER ICV-151G-1 1/2" REMOTE CONTROL VALVE OR EQUAL
	HUNTER PROS-12 POP-UPS WITH MP-ROTATOR, MP3000'S WITH HUNTER SWING JOINT KIT, MODEL #SJ-512
C	HUNTER IC-18 STATION ELECTRIC CONTROLLER. CONTROLLER TO BE LOCATED NEXT TO HOUSE PANEL. IRRIGATOR MUST SEE GENERAL CONTRACTOR FOR EXACT LOCATION OF HOUSE PANEL.
	2" PVC, CLASS 200, MAIN LINE, SIZED ON PLAN.
	ALL PIPE TO BE PVC, CLASS 200, SIZED ON PLAN. UNSIZED PIPE TO BE 3/4".
	RAINBIRD SUBSURFACE TUBING WITH COPPER SHIELD
	ALL LATERALS UNDER CONCRETE OR PAVED SURFACES MUST BE ENCASED IN A PVC SLEEVE 2 TIMES PIPE DIAMETER. USE CLASS 200 PIPE.
A | B / C	A) STATION NUMBER B) SIZE OF VALVE IN INCHES C) TOTAL GPM

IRRIGATION IS REGULATED BY
TEXAS NATURAL RESOURCE CONSERVATION COMMISSION,
P.O. BOX 13087,
AUSTIN TEXAS 78711-3087.

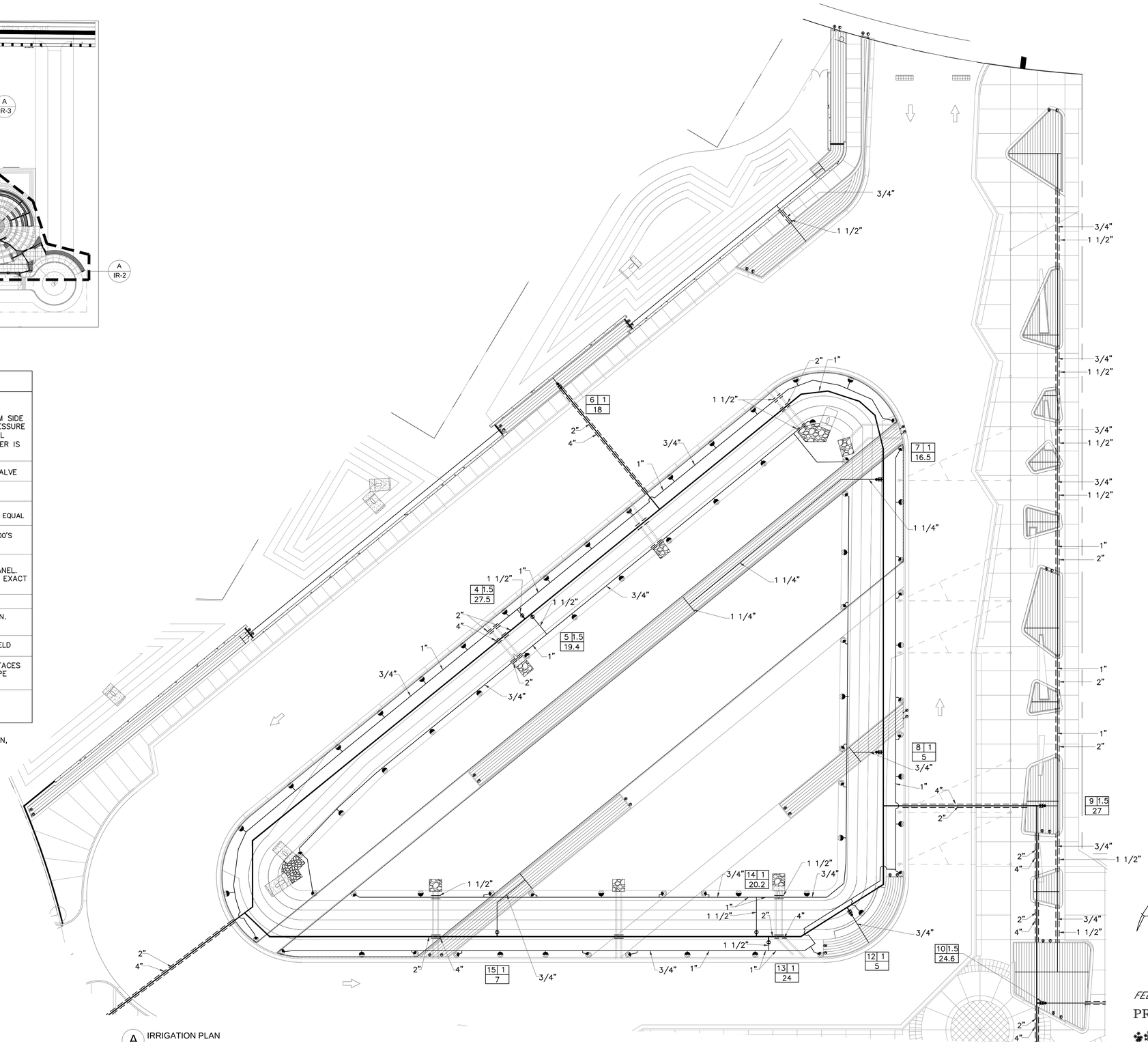

A IRRIGATION PLAN
1" = 20'-0"

02/04/2016 10:46PM C:\Users\Owner\Google Drive\Public\ExigoArchitects-Pachelli\2015\Northgate Transfer Center\NORTHGATETRANSFER IRRIGATION PLAN.DWG

REFERENCES -- BENCHMARKS

BY	REVISIONS	DATE

ARCHITECTS SEAL

PREFINAL DESIGN PHASE NOT FOR CONSTRUCTION

SCALE
HOR. SHOWN
VER. SHOWN
DATE 11/20/15
DESIGN BY FSI
DRAWN BY FSI
CHKD. BY JAS
APPD. BY JAS

PROJECT NAME

NORTHGATE TRANSFER CENTER

EL PASO, TEXAS.

CITY OF EL PASO

CAPITAL IMPROVEMENT DEPARTMENT

Patricia Garcia
STATE OF TEXAS
PATRICIA GARCIA
16743
LICENSED IRRIGATOR

FEBRUARY 04, 2016

PRACTICAL SOLUTIONS
LANDSCAPE & IRRIGATION DESIGN
5505 ROSA, SUITE B
EL PASO, TEXAS 79905
915-252-7845
practicaldesigns@sbcglobal.net

SHEET TITLE

ENLARGED IRRIGATION PLANS

SHEET
IR-3

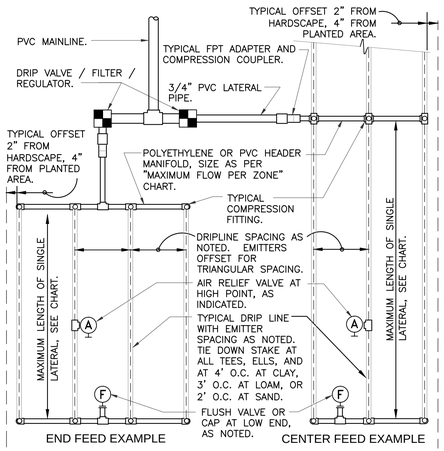

MAXIMUM LATERAL LENGTH (FEET)	
EMITTER FLOW RATE GPH	
PSI	12" SPACING AT 0.6 G.P.H.
10	125
20	249
30	307
40	350
50	125
60	125

GRID PRECIPITATION RATES (IN/HR)		
		EMITTER FLOW RATE
EMITTER SPACING	LATERAL SPACING	0.6
12	12	0.96
18	18	0.69
24	24	0.28

LATERAL FLOW PER 100 FT (GPM)	
EMITTER FLOW	12" SPACING
0.6 GPH	1.0 GPM

MAXIMUM FLOW PER ZONE		
	MAX GPM	PSI LOSS
SCHEDULE 40 PVC HEADER SIZE		
1/2"	4.7 GPM	7.7 PSI
3/4"	8.3 GPM	5.6 PSI
1"	13.5 GPM	4.2 PSI
1-1/2"	33.9 GPM	2.9 PSI
2"	52.4 GPM	1.9 PSI
POLY PIPE HEADER SIZE		
1/2"	4.7 GPM	8.8 PSI
3/4"	8.3 GPM	6.3 PSI
1"	13.5 GPM	4.8 PSI
1-1/2"	31.8 GPM	2.9 PSI
2"	52.4 GPM	2.2 PSI

SLOPED CONDITION NOTE:
1. DRIPLINE LATERALS SHOULD FOLLOW THE CONTOURS OF THE SLOPE WHENEVER POSSIBLE.
2. INSTALL AIR RELIEF VALVE AT HIGHEST POINT.
3. NORMAL SPACING WITHIN THE TOP 2/3 OF SLOPE
4. INSTALL DRIPLINE AT 25% GREATER SPACING AT THE BOTTOM 1/3 OF THE SLOPE.
5. WHEN ELEVATION CHANGE IS 10 FT OR MORE, ZONE THE BOTTOM 1/3 ON A SEPARATE VALVE.

IRRIGATION LEGEND

	2" FEBCO 825Y REDUCED PRESSURE BACKFLOW PREVENTER. USE WITH 2" WILKINS MODEL 600C PRESSURE REDUCING VALVE ON THE DOWNSTREAM SIDE OF COPPER LINE OF BACKFLOW ASSEMBLY IF PRESSURE IS HIGHER THAN 100 PSI. INSTALL 2" BRASS BALL VALVE IN A 10" ROUND VALVE BOX IF YARD METER IS NOT USED
	1 1/2" HUNTER ICZ-151-40 REMOTE CONTROL VALVE
	1" HUNTER ICZ-101-40 REMOTE CONTROL VALVE
	HUNTER ICV-151G-1 1/2" REMOTE CONTROL VALVE OR EQUAL
	HUNTER PROS-12 POP-UPS WITH MP-ROTATOR, MP3000'S WITH HUNTER SWING JOINT KIT, MODEL #SJ-512
C	HUNTER IC-18 STATION ELECTRIC CONTROLLER. CONTROLLER TO BE LOCATED NEXT TO HOUSE PANEL. IRRIGATOR MUST SEE GENERAL CONTRACTOR FOR EXACT LOCATION OF HOUSE PANEL.
	2" PVC, CLASS 200, MAIN LINE, SIZED ON PLAN.
	ALL PIPE TO BE PVC, CLASS 200, SIZED ON PLAN. UNSIZED PIPE TO BE 3/4".
	RAINBIRD SUBSURFACE TUBING WITH COPPER SHIELD
	ALL LATERALS UNDER CONCRETE OR PAVED SURFACES MUST BE ENCASED IN A PVC SLEEVE 2 TIMES PIPE DIAMETER. USE CLASS 200 PIPE.
A B C	A) STATION NUMBER B) SIZE OF VALVE IN INCHES C) TOTAL GPM

IRRIGATION IS REGULATED BY
TEXAS NATURAL RESOURCE CONSERVATION COMMISSION,
P.O. BOX 13087,
AUSTIN TEXAS 78711-3087.

GENERAL NOTES

A. THE CONTRACTOR SHALL VERIFY THE EXACT LOCATION OF ALL EXISTING AND PROPOSED UTILITIES AND ALL SITE CONDITIONS PRIOR TO BEGINNING CONSTRUCTION. ANY DAMAGE CAUSED BY THE CONTRACTOR SHALL BE REPAIRED OR REPLACED AT NO ADDITIONAL COST TO THE OWNER.

B. LOCATE ALL VALVES AWAY FROM LOW SPOTS OR AREAS OF DRAINAGE FLOW.

C. MAINTAIN 4" MINIMUM CLEARANCE BETWEEN PIPE RUNNING IN THE SAME TRENCH. CONTROL WIRE SHALL ALWAYS BE TO THE SIDE AND BELOW THE TOP OF THE PIPE RUNNING IN THE SAME TRENCH.

D. ALL PIPING/WIRING RUNNING BENEATH PAVED SURFACES (DRIVES, SIDEWALKS, ETC.) SHALL BE INSTALLED IN CLASS 200 PVC SLEEVES. SLEEVES SHALL BE OF THE SIZE SO THAT THE INSIDE DIAMETER OF THE SLEEVE IS 2 PIPE SIZES GREATER THAN THAT OF THE COMBINED OUTER DIAMETER OF ALL ITEMS INSTALLED IN THE SLEEVES.

E. THE CONTRACTOR WILL NOT WILLFULLY INSTALL THE IRRIGATION SYSTEM AS DESIGNED, WHEN IT IS OBVIOUS THAT FIELD CONDITIONS EXIST, THAT WERE NOT CONSIDERED AT TIME OF DESIGNING THE SYSTEM. ANY CONDITIONS NOTED AS SUCH, SHALL BE REPORTED TO THE ARCHITECT AND IRRIGATION DESIGNER. IF THE CONTRACTOR FAILS TO DO SO, THE CONTRACTOR ASSUMES FULL RESPONSIBILITY FOR ANY CORRECTIONS NEEDED.

F. ALL CONTROL WIRING FROM THE VALVES TO THE CONTROLLER MUST BE INSTALLED IN A 1" PVC CONDUIT PIPE IF BURIED BENEATH CONCRETE OR ASPHALT SURFACES.

G. CONTRACTOR IS RESPONSIBLE FOR CONNECTING AUTOMATIC CONTROLLER TO ELECTRICITY.

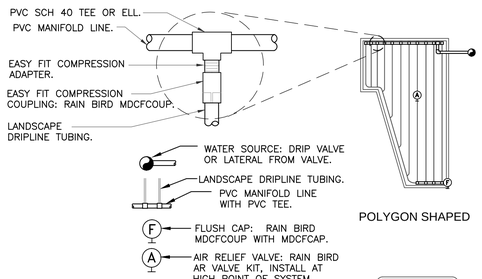

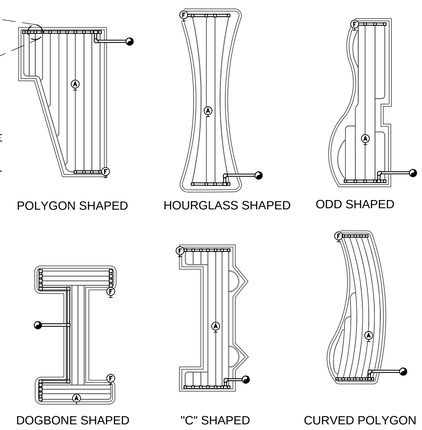

TYPICAL RAIN BIRD DRIPLINE REQUIREMENTS

NOT TO SCALE

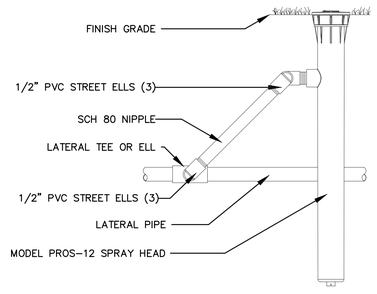

PROS-12 SPRAY HEAD

NOT TO SCALE

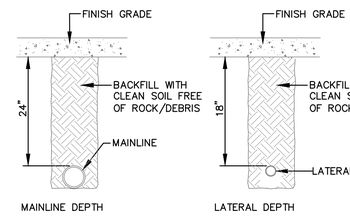

TRENCH STANDARD DETAIL

NOT TO SCALE

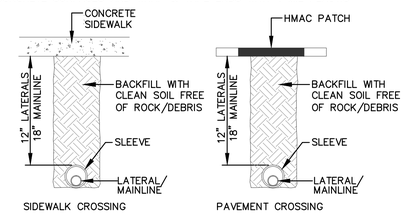

SLEEVING STANDARD DETAIL

NOT TO SCALE

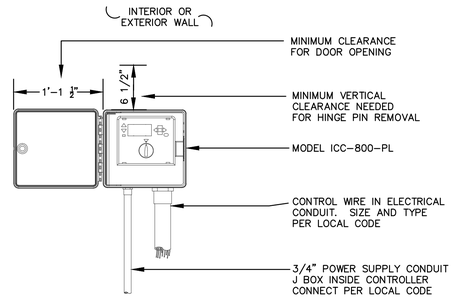

IC-1200-PL CONTROLLER

NOT TO SCALE

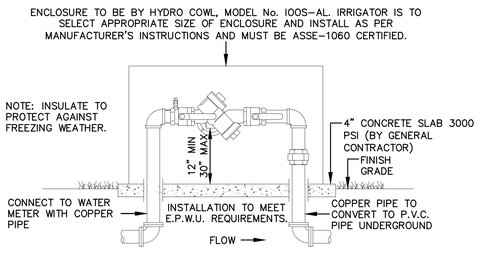

RPA FEBCO Mo.825Y DETAIL

NOT TO SCALE

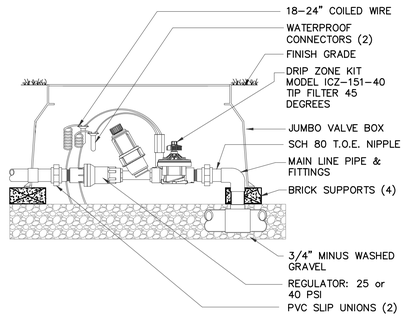

DRIP CONTROL ZONE

NOT TO SCALE

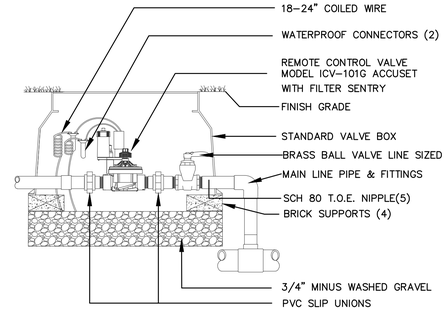

ICV 1 1/2" & 2" GLOBE VALVE WITH ISOLATION VALVE

NOT TO SCALE

FEBRUARY 04, 2016

PRACTICAL SOLUTIONS
LANDSCAPE & IRRIGATION DESIGN
5505 ROSA, SUITE B
EL PASO, TEXAS 79905
915-252-7845
practicaldesigns@sbcglobal.net

02/04/2016 10:46PM C:\Users\Owner\Google Drive\Public\ExigoArchitects-Pachelli\2015\Northgate Transfer Center\NORTHGATETRANSFER IRRIGATION PLAN.DWG

REFERENCES - BENCHMARKS

BY	REVISIONS	DATE

ARCHITECTS SEAL

PREFINAL DESIGN PHASE NOT FOR CONSTRUCTION

SCALE
HOR SHOWN
VER SHOWN
DATE 11/20/15
DESIGN BY FB
DRAWN BY FB
CHKD BY JAR
APPD BY JAR

PROJECT NAME
NORTHGATE TRANSFER CENTER

EL PASO, TEXAS.

CITY OF EL PASO
CAPITAL IMPROVEMENT DEPARTMENT

SHEET TITLE
IRRIGATION DETAILS

SHEET
IR-4

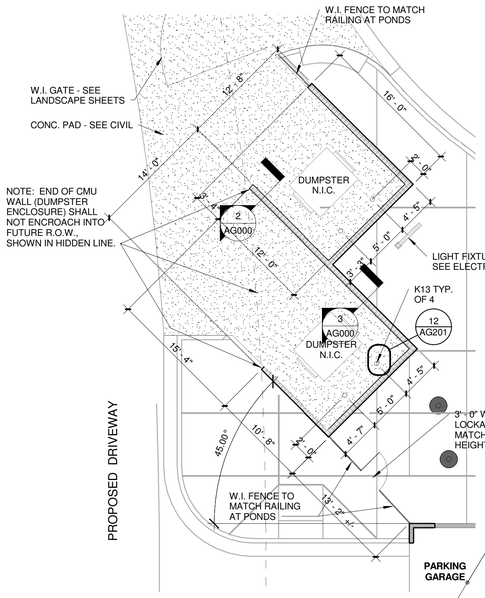

4 ENLARGED DUMPSTER ENCLOSURE
1/8" = 1'-0"

2 TYP. WALL SECTION @ DUMPSTER PAD
1/2" = 1'-0"

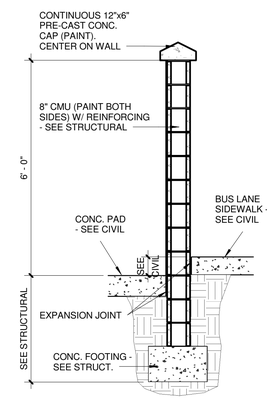

3 WALL SECTION @ DUMPTER PAD & BUS LANE WALK
1/2" = 1'-0"

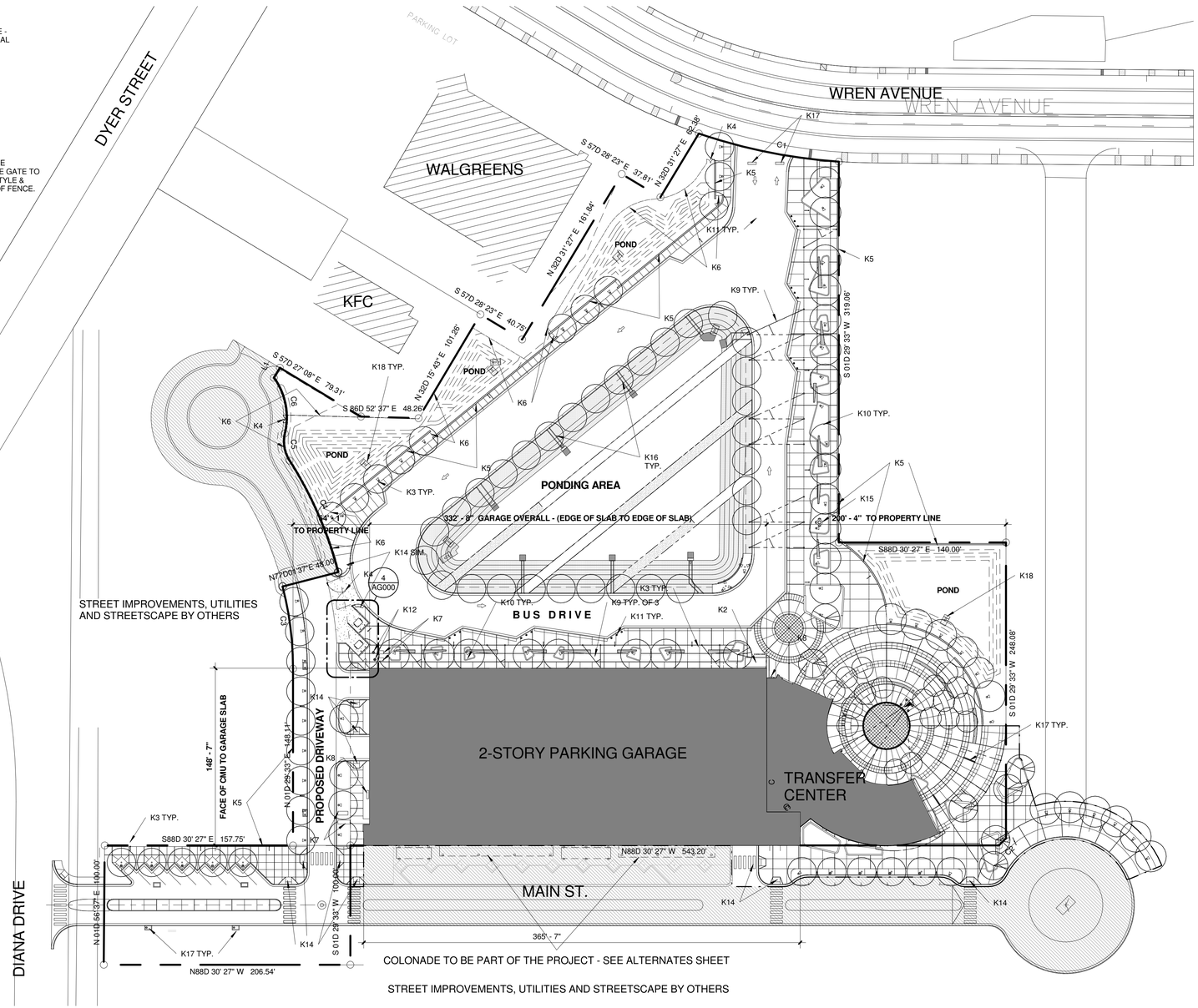

1 SITE PLAN
1" = 50'-0"

GENERAL NOTES

1. SEE ELECTRICAL FOR LIGHT POLE LOCATIONS.
2. SEE CIVIL AND LANDSCAPE FOR W.I. RAILING / FENCING AND ROCK WALL EXTENTS.
3. SEE PLBG AND IRRIGATION FOR LOCATION OF METERS, GROUND HYDRANTS, ETC.
4. SEE CIVIL FOR STORM WATER PIPES, INLET LOCATIONS AND CULVERT HEADWALL LOCATIONS.

KEYED NOTES

K1 DUMPSTER ENCLOSURE

K2 TRANSFORMERS ON PAD - SEE ELECTRICAL

K3 LIGHT POLES - SEE ELECTRICAL

K4 WROUGHT IRON GATE - SEE LANDSCAPE SHEETS FOR DETAILS

K5 ROCK WALL - SEE CIVIL & LANDSCAPE

K6 WROUGHT IRON FENCE / RAILING - SEE LANDSCAPE SHEETS

K7 BACKFLOW PREVENTOR - SEE PLUMBING AND LANDSCAPE. COORDINATE LOCATION WITH SITE FIXTURES AND OTHER UTILITIES.

K8 GAS METER - SEE PLUMBING. COORDINATE LOCATION WITH OTHER UTILITIES.

K9 SHADE CANOPY - SEE STRUCTURAL AND LANDSCAPE SHEETS

K10 PLANTER - SEE LANDSCAPE SHEETS

K11 CONCRETE BOLLARD - SEE STRUCTURAL

K12 WATER METER - SEE PLUMBING AND LANDSCAPE. COORDINATE LOCATION WITH SITE FIXTURES AND OTHER UTILITIES.

K13 8" CONCRETE-FILLED PIPE BOLLARD

K14 ADA RAMP IN SIDEWALK - SEE LANDSCAPE SHEETS

K15 FIRE HYDRANT

K16 CONCRETE FLUME - SEE CIVIL

K17 STORM WATER INLET - SEE CIVIL

K18 CULVERT HEADWALL

SITE PLAN LEGEND

NEW BUILDINGS

WORK BY OTHERS

100% CONSTRUCTION DOCUMENTS

REFERENCES – BENCHMARKS

No.	DATE	REVISIONS	BY

ARCHITECT'S SEAL

REGISTERED ARCHITECT RODRIGO MENDOZA 12937 STATE OF TEXAS

03/03/2016

SCALE
HOR: SHOWN
VER: SHOWN

DATE 03/03/2016
DES.CHK BY EDGE/MJ MEZA
DRAWN BY JESUS CORTES
CHKD BY JESUS CORTES
APPD BY Approver

PROJECT NAME

NORTHGATE TRANSFER CENTER

EL PASO, TEXAS.

CITY OF EL PASO
CAPITAL IMPROVEMENT DEPARTMENT

exigo
ARCHITECTURE INSPIRED BY PURPOSE

SHEET TITLE

SITE PLAN

SHEET

AG000

FLOOR PLAN LEGEND

	PROPERTY LINE	01	DOOR TAG- REFER TO SHEET AG400
10	COLUMN GRID	XX	WALL TAG- REFER TO SHEET AG400
X A0.0	CALLOUT	A	WINDOW TAG- REFER TO SHEET AG400
		N	SCREEN PANEL TAG- REFER TO SHEET AG402
X A0.0	BUILDING ELEVATION	0' - 0"	SPOT ELEVATION RELATIVE TO ELEVATOR TOWER SLAB LEVEL (0' - 0")
X A0.0	INTERIOR ELEVATION	FD	FLOOR DRAIN - REFER TO PLUMBING

KEYED NOTES

K1 UNDERGROUND DRAIN LEADER TO POND - SEE SITE PLAN FOR CONTINUATION

K2 DRAIN LEADER FROM FLOOR DRAIN ABOVE

K3 TRANSFORMER ON PAD & ELEC PANELS - SEE ELECTRICAL

K4 CONCRETE RAMP

K5 BIKE RACK AS SPECIFIED

K6 LIGHT POSTS - SEE ELECTRICAL

K7 POSTS FOR SHADE SCREENS - SEE STRUCTURAL AND LANDSCAPE SHEETS

K8 BFP - SEE PLUMBING AND LANDSCAPE. COORDINATE LOCATION WITH PLANTERS AND OTHER UTILITIES.

K9 GAS METER - SEE PLUMBING. COORDINATE LOCATION WITH OTHER UTILITIES.

K10 GREASE TRAP - SEE PLUMBING

K11 DUMPSTERS - N.I.C.

K12 FLOOR DRAIN - SEE PLUMBING

K13 8" CONCRETE-FILLED PIPE BOLLARD

K14 W.I. FENCE / RAILING AND GATE - SEE LANDSCAPE SHEETS FOR DETAILS

K15 WATER METERS - SEE PLUMBING AND LANDSCAPE. COORDINATE LOCATION WITH SITE FIXTURES AND OTHER UTILITIES.

K16 CARD READER AS SPECIFIED

K17 NOT USED

K18 BOLLARD-REFER TO DETAIL 12/AG201

GENERAL NOTE

AT GARAGE AND TRANSFER CENTER SHARED WALL, THE OVERFLOW ROOF DRAIN LEADERS FROM TRANSFER CENTER ARE TO DAYLIGHT ONTO GARAGE PAVEMENT. COORDINATE WITH STRUCTURAL, PLUMBING & TRANSFER CENTER DRAWINGS FOR EXACT LOCATION.

PARKING RECAP

1ST LEVEL:

H/C SPACES.....6
ELECTRIC CARS.....8
CAR-POOL DESIGNATED SPACES.....8
REGULAR SPACES.....28
TOTAL.....50

2ND LEVEL:

H/C SPACES.....0
ELECTRIC CARS.....0
CAR-POOL DESIGNATED SPACES.....0
REGULAR SPACES.....123

GRAND TOTAL SPACES.....173

BICYCLE RACKS:
6 RACKS (EA. RACK = 18 BIKES)...108 BIKES TOTAL

AREA RECAP

1ST LEVEL:

PARKING AREA.....25,548 S.F.
RETAIL AREA.....17,028 S.F.
TOTAL.....42,576 S.F.

2ND LEVEL:
PARKING AREA.....42,152 S.F.
RETAIL AREA.....0

GRAND TOTAL PARKING & RETAIL AREA...84,728 S.F.

KITCHEN HOOD @ TRANSFER CENTER:

SEE MECHANICAL SHEETS FOR FIRE-SUPPRESSION SYSTEM INFORMATION AT KITCHEN HOOD

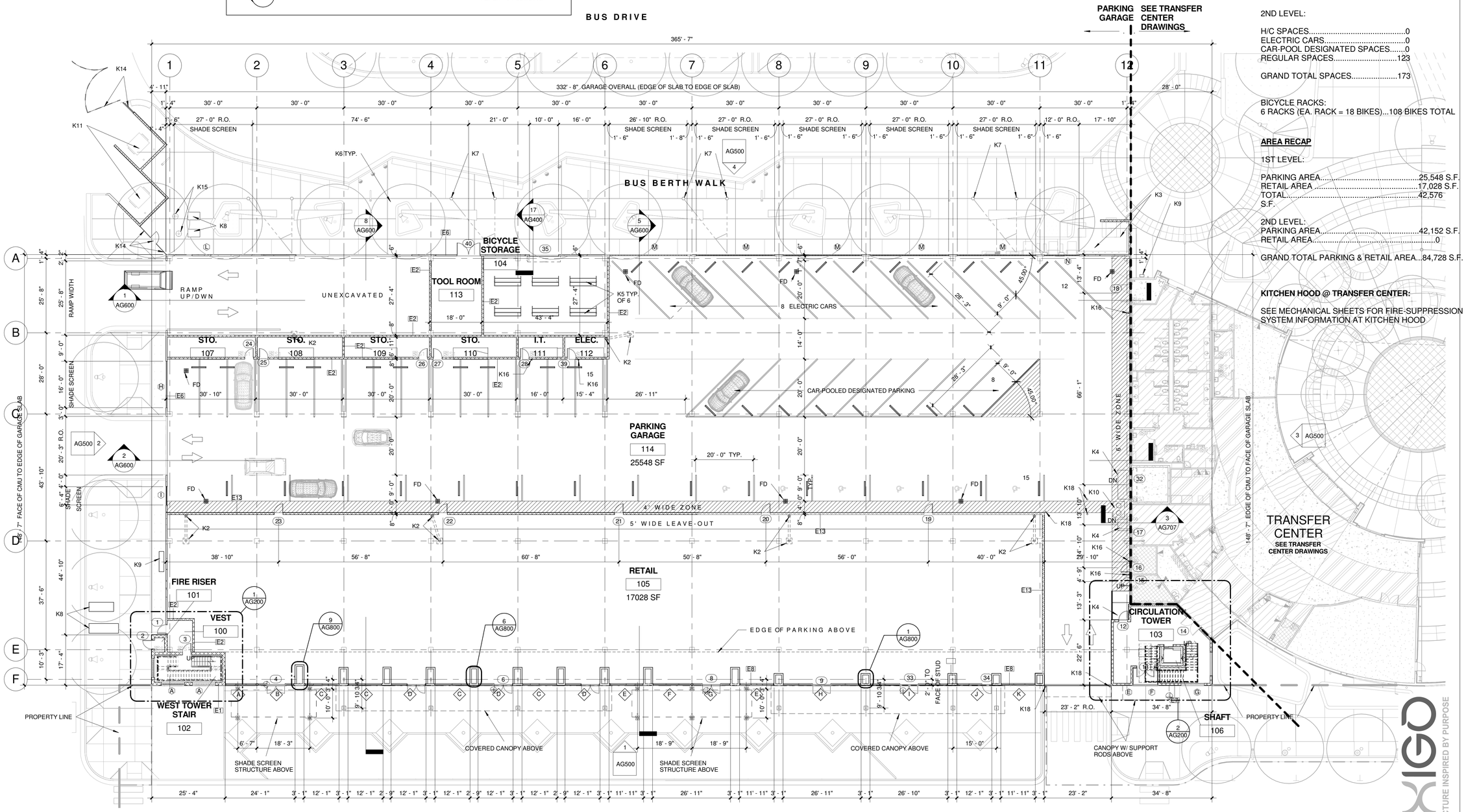

1 LEVEL 1- FLOOR PLAN
1/16" = 1'-0"

100% CONSTRUCTION DOCUMENTS

REFERENCES – BENCHMARKS

No.	DATE	REVISIONS	BY

ARCHITECT'S SEAL

03/03/2016

SCALE
HOR: 3/4"=1'-0"
VER: 3/4"=1'-0"

DATE 03/03/2016
DESIGN BY EMGC
DRAWN BY EMGC
CHKD BY J. ORTEGA
APPD BY E. MESA

PROJECT NAME
NORTHGATE TRANSFER CENTER

CITY OF EL PASO
CAPITAL IMPROVEMENT DEPARTMENT

EL PASO, TEXAS.

exigo
ARCHITECTURE INSPIRED BY PURPOSE

SHEET TITLE
LEVEL 1- FLOOR PLAN

SHEET
AG100

FLOOR PLAN LEGEND

	PROPERTY LINE	01	DOOR TAG- REFER TO SHEET AG400
10	COLUMN GRID	XX	WALL TAG- REFER TO SHEET AG400
X / A0.0	CALLOUT	A	WINDOW TAG- REFER TO SHEET AG400
		N	SCREEN PANEL TAG- REFER TO SHEET AG402
X A0.0	BUILDING ELEVATION	0' - 0"	SPOT ELEVATION RELATIVE TO ELEVATOR TOWER SLAB LEVEL (0' - 0")
X A0.0	INTERIOR ELEVATION	FD	FLOOR DRAIN - REFER TO PLUMBING

KEYED NOTES

K1 LOW CONCRETE WALL - SEE STRUCTURAL

K2 FLOOR DRAIN - SEE PLUMBING

K3 ROOF DRAIN - SEE PLUMBING

K4 LIGHT POSTS - SEE ELECTRICAL

K5 SHADE CANOPY BRACKET ANCHORED TO WALL - SEE STRUCTURAL

K6 PRE-FAB EQUIPMENT CURB FOR FUTRE RTU - SEE MECHANICAL & COORDINATE PENETRATION WITH STRUCTURAL.

K7 METAL CANOPY WITH SUPPORT RODS OVER DOOR

K8 OUTLINE OF WALL BELOW

K9 CARD READER AS SPECIFIED

K10 LOCKABLE GATE - SOLID METAL PANEL (PAINT). HEIGHT TO MATCH HOST WALL.

GENERAL NOTES

1. SEE ROOF PLAN FOR PARKING SLAB SLOPES.
2. SEE ROOF PLAN FOR SECTIONS THRU RETAIL ROOF.

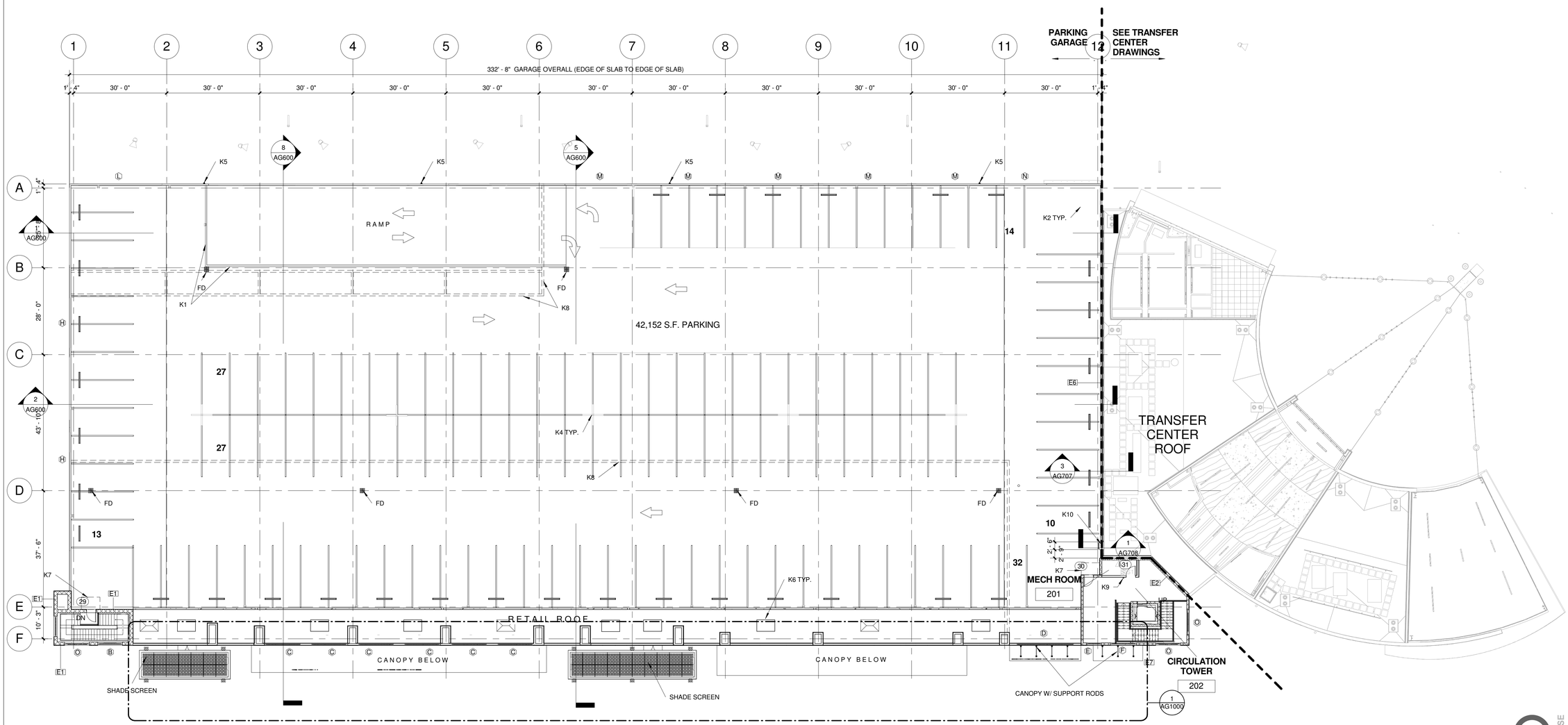

1 LEVEL 2- FLOOR PLAN
1/16" = 1'-0"

2ND LEVEL - 123 PARKING SPACES

100% CONSTRUCTION DOCUMENTS

exigo ARCHITECTURE INSPIRED BY PURPOSE

REFERENCES – BENCHMARKS

No.	DATE	REVISIONS	BY

ARCHITECT'S SEAL

03/03/2016

SCALE
HOR: SHOWN
VER: SHOWN

DATE 03/03/2015
DESIGN BY LUCIENO MEDINA
DRAWN BY JESUS CORTESA
CHKD BY JESUS CORTESA
APPD BY Approver

PROJECT NAME
NORTHGATE TRANSFER CENTER

EL PASO, TEXAS.

CITY OF EL PASO
CAPITAL IMPROVEMENT DEPARTMENT

SHEET TITLE
LEVEL 2- FLOOR PLAN

SHEET
AG101

GENERAL NOTES

1. CRICKETS AS SHOWN ON RETAIL ROOF. ADD CRICKETS TO EQUIPMENT CURBS TO AVOID PONDING WATER.

2. PARKING SLAB SHALL SLOPE TO DRAIN - SEE STRUCTURAL AND PLUMBING.

3. PARKING STRIPES NOT SHOWN FOR CLARITY OF PARKING SLAB SLOPES. SEE LEVEL 2 FLOORPLAN FOR STRIPING.

4. COORDINATE RD'S & FLOOR DRAINS TO AVOID CONFLICT WITH STRUCTURAL COMPONENTS BELOW.

KEYED NOTES

K1 METAL CANOPY WITH SUPPORT RODS

K2 LOW CONCRETE WALL - SEE STRUCTURAL

K3 STEEL LADDER (PAINT) & LOCKABLE GATE MADE OF SOLID METAL PANEL (PAINT). HEIGHT TO MATCH HOST WALL.

K4 PRE-FAB EQUIPMENT CURB FOR FUTURE RTU - SEE MECHANICAL & COORDINATE PENETRATION WITH STRUCTURAL.

K5 LIGHT FIXTURE ON RETAIL ROOF - MOUNT ON APPROPRIATE BASE TO ENSURE LEAK-PROOF INSTALLATION. SEE ELECTRICAL

K6 NOT USED

K7 NOT USED

K8 ROOF CRICKET

ROOF PLAN LEGEND

S&O = SCUPPER & OVERFLOW PENETRATION IN WALL

FD = FLOOR DRAIN - SEE PLUMBING

LP = LIGHT POST - SEE ELECTRICAL

NOTE: ALL GARAGE ROOF SLOPES TO BE 1/4" / FT. SEE TRANSFER CENTER ROOF PLAN FOR TRANSFER CENTER ROOF SLOPES.

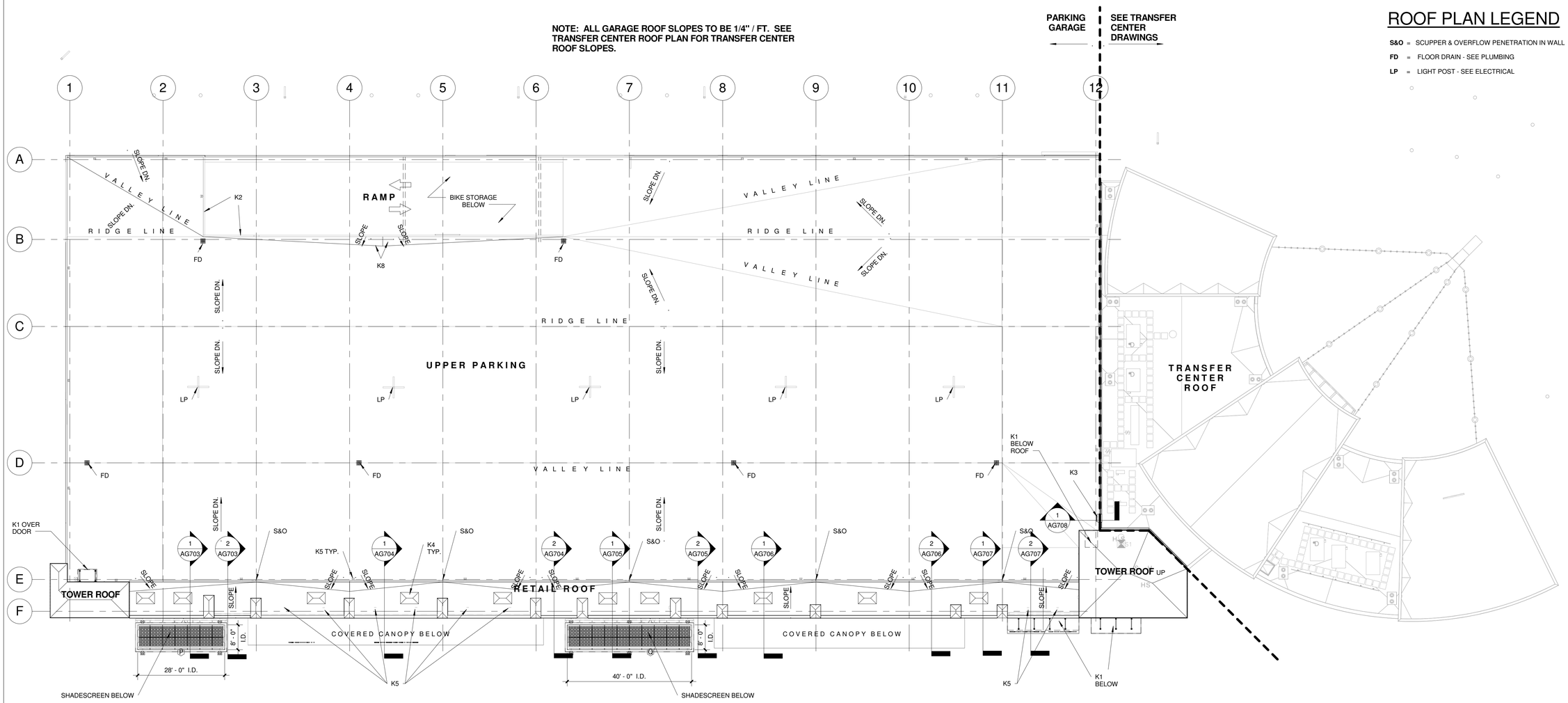

4 ROOF PLAN
1/16" = 1'-0"

100% CONSTRUCTION DOCUMENTS

exigo
ARCHITECTURE INSPIRED BY PURPOSE

REFERENCES – BENCHMARKS

No.	DATE	REVISIONS	BY

ARCHITECT'S SEAL
REGISTERED ARCHITECT RODRIGO MEDINA 12937 STATE OF TEXAS
03/03/2016

SCALE
HOR: SHOWN
VER: SHOWN

DATE 03/03/2016
DES.CHK BY EDGE/MJ MEDINA
DRAWN BY JESUS CORTES
CHKD BY Approver
APPD BY Approver

PROJECT NAME
NORTHGATE TRANSFER CENTER
EL PASO, TEXAS.

CITY OF EL PASO
CAPITAL IMPROVEMENT DEPARTMENT

THE CITY OF EL PASO TEXAS

SHEET TITLE
ROOF PLAN

SHEET
AG102

NOTE: PLAN DIMENSIONS EXCLUDE FINISHES.

KEYED NOTES

K1 PRE-FAB METAL STAIRS - PAINT

K2 METAL GATE - PAINT

K3 DOOR EXIT DEVICE AS SPECIFIED

K4 SHADESCREEN

K5 STEEL PIPE GUARDRAIL - PAINT

K6 SUMP PIT - SEE STRUCTURAL & PLUMBING. ADJUST PIT SIZE TO MEET PUMP CLEARANCE REQUIREMENTS.

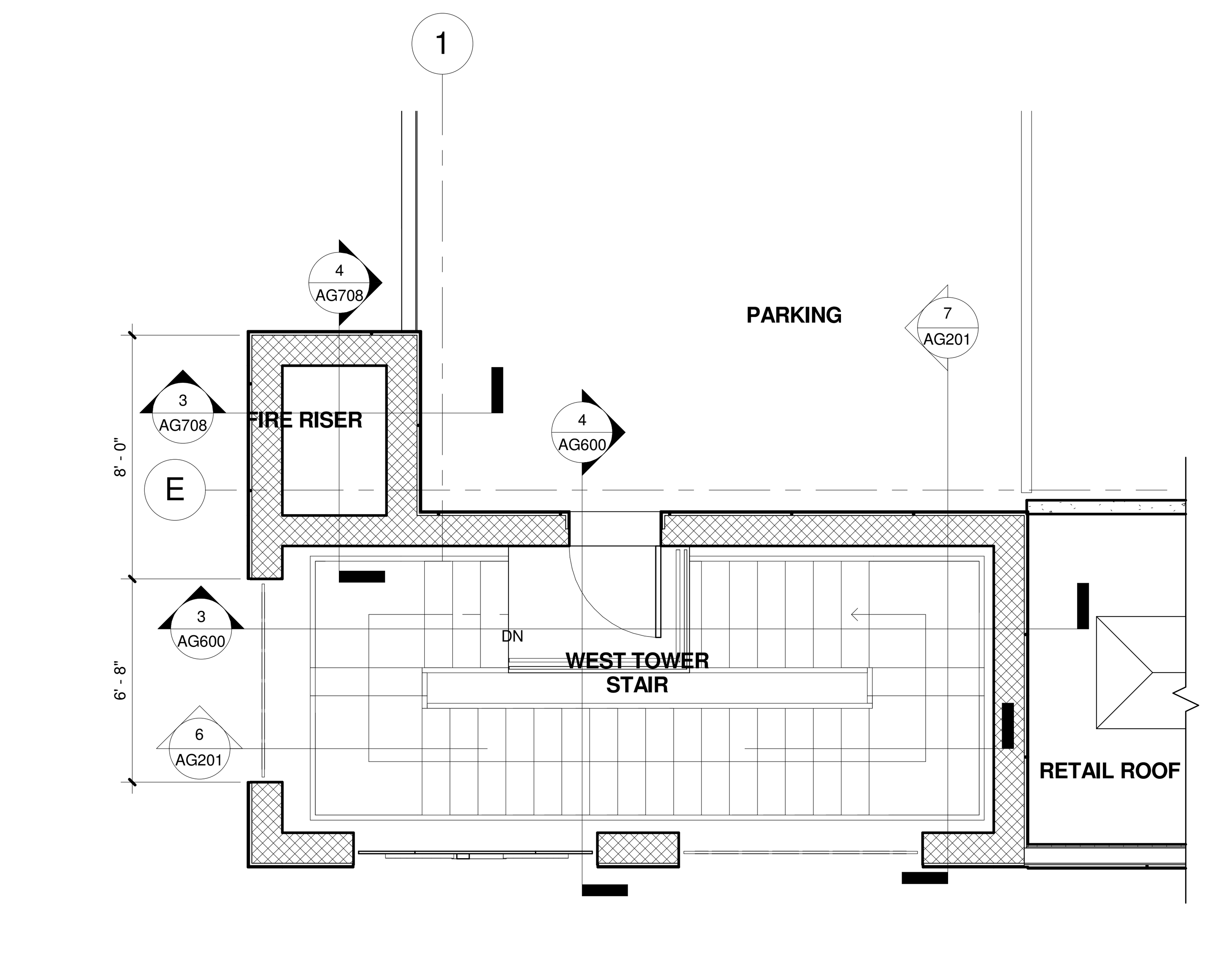

3 LEVEL 2 WEST TOWER
1/4" = 1'-0"

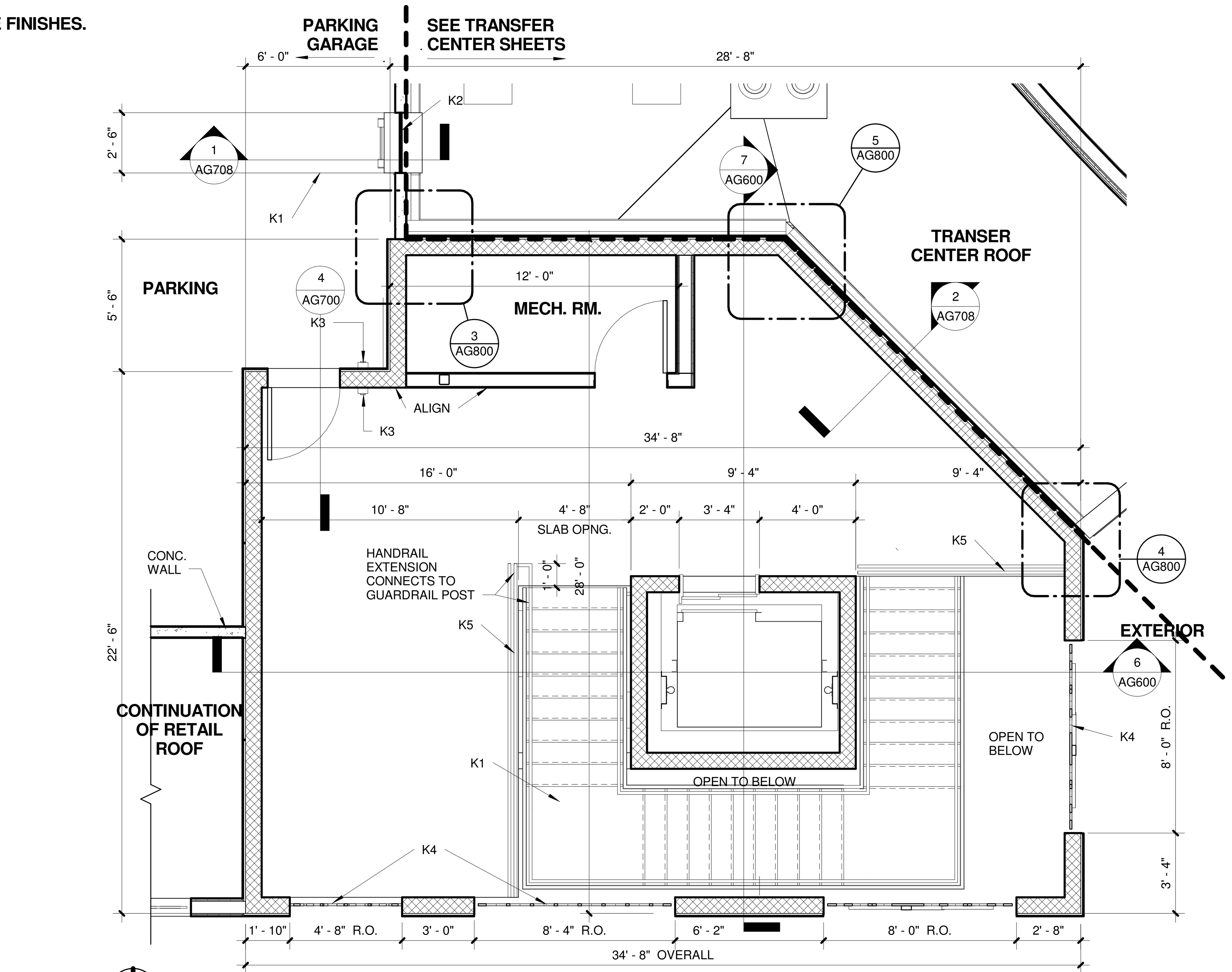

4 LEVEL 2 EAST TOWER
1/4" = 1'-0"

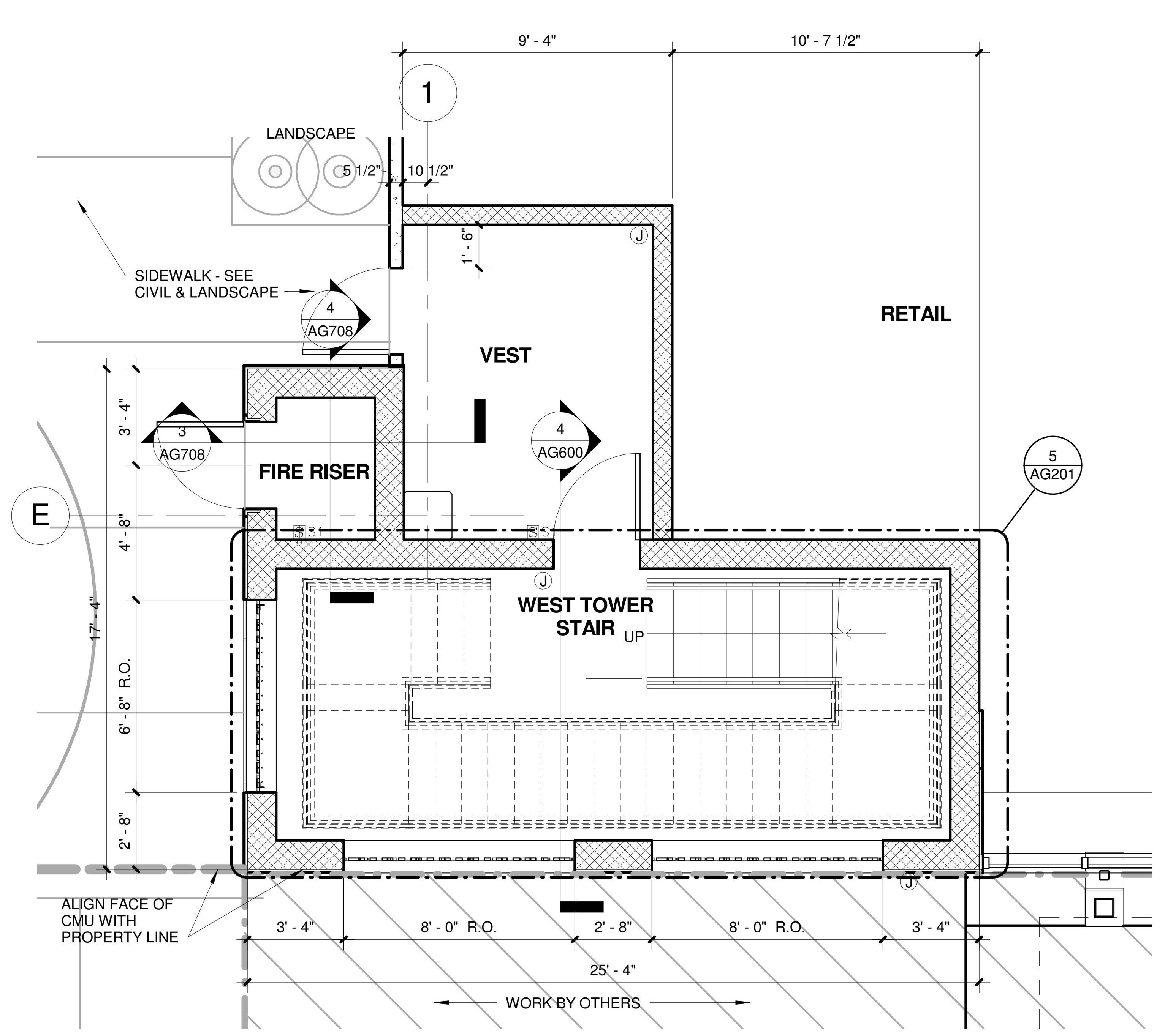

1 LEVEL 1 WEST TOWER
1/4" = 1'-0"

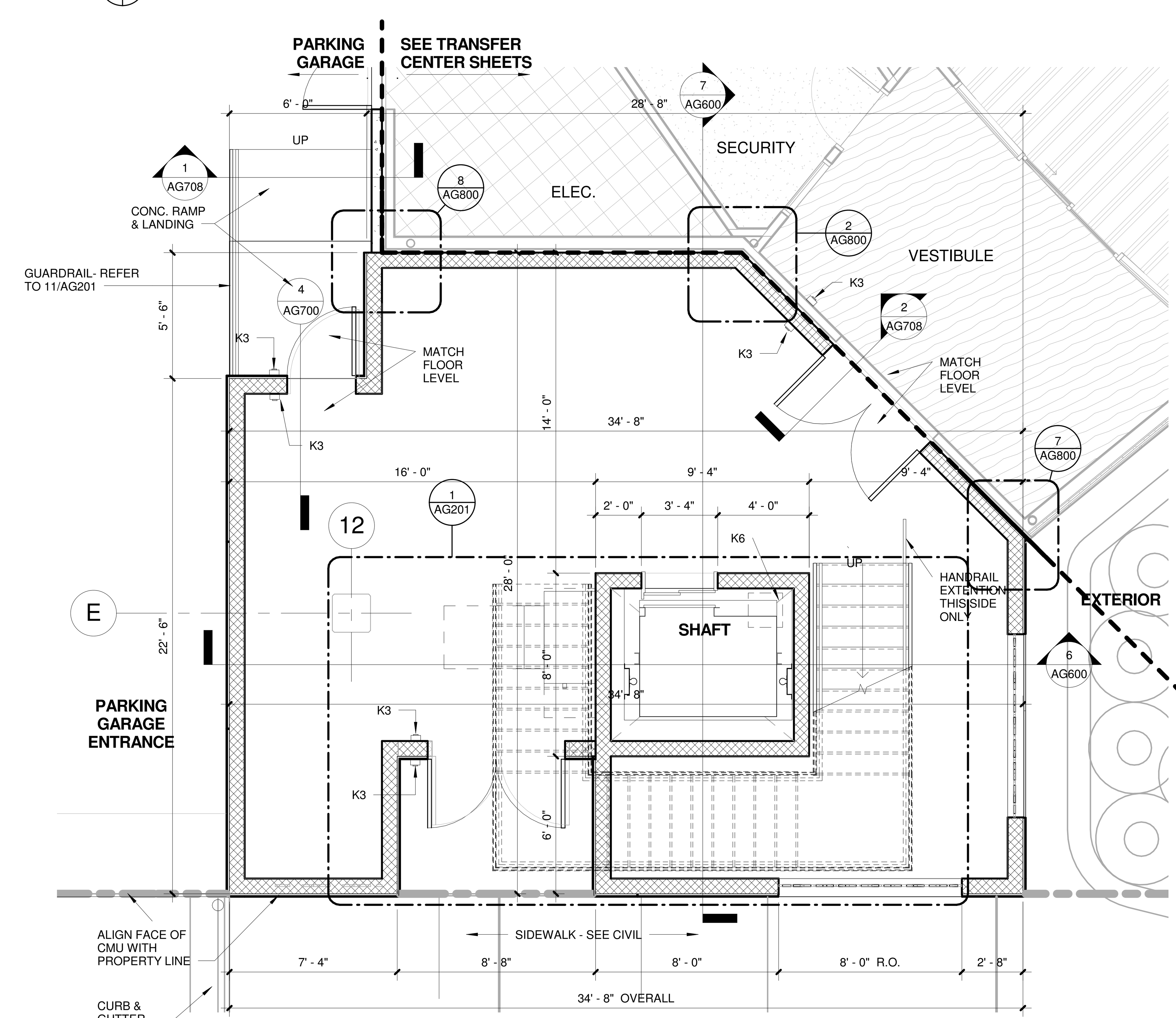

2 LEVEL 1 EAST TOWER
1/4" = 1'-0"

100% CONSTRUCTION DOCUMENTS

exigo ARCHITECTURE INSPIRED BY PURPOSE

REFERENCES -- BENCHMARKS

REVISIONS

ARCHITECTS SEAL

03/03/2016

SCALE HOR: SHOWN VER: SHOWN

DATE: 03/2016 DESIGN BY Designer DRAWN BY Author CHKD. BY Checker APPD. BY Approver

PROJECT NAME

NORTHGATE TRANSFER CENTER

EL PASO, TEXAS.

CITY OF EL PASO

CAPITAL IMPROVEMENT DEPARTMENT

SHEET TITLE

ENLARGED TOWER PLANS

SHEET

AG200

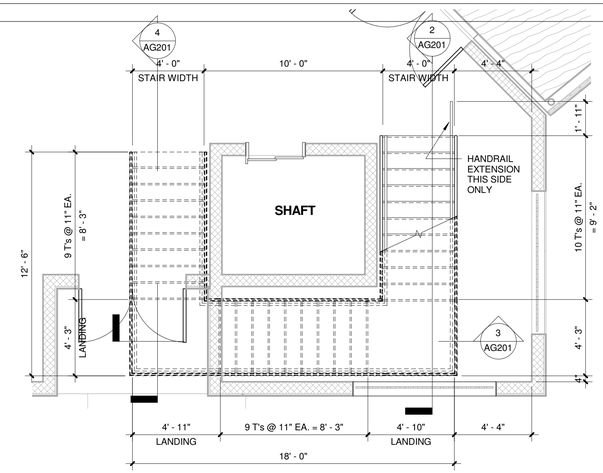

1 LEVEL 1 STAIRS AT EAST TOWER
1/4" = 1'-0"

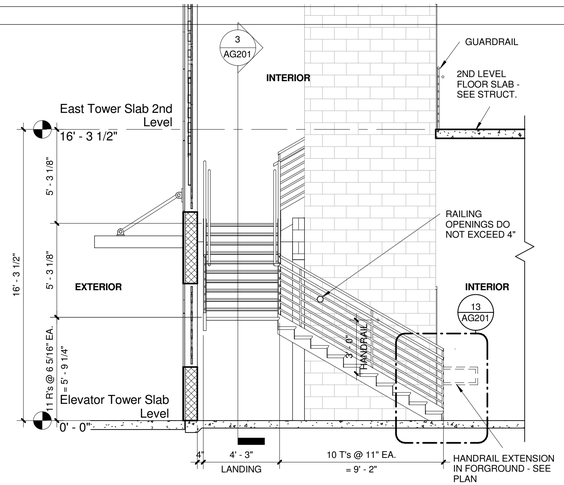

2 SECTION A AT STAIRS (EAST TOWER)
1/4" = 1'-0"

GUARDRAIL & HANDRAIL NOTES:

1. SHALL BE DESIGNED FOR SINGLE CONCENTRATED LOAD OF 200 POUNDS APPLIED IN ANY DIRECTION AT ANY POINT ALONG THE TOP.

2. ALL RAILING & BALLUSTERS TO BE 1 1/2" DIA. STEEL PIPE (PAINTED).

3. HORIZONTAL RAILING SHALL BE SPACED 6" O.C. MAX. RAILING OPENINGS SHALL NOT EXCEED 4".

4" SPACE BALLUSTERS 4' - 0" O.C. MAX.

5. TOP OF HANDRAILS TO BE 3' - 0".

6. TOP OF GUARDRAILS TO BE 3' - 6".

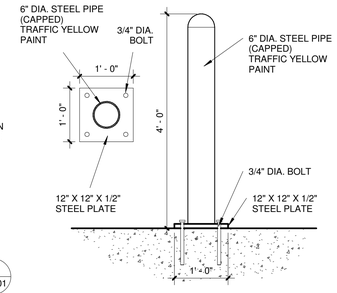

12 SURFACE MOUNTED BOLLARD
3/4" = 1'-0"

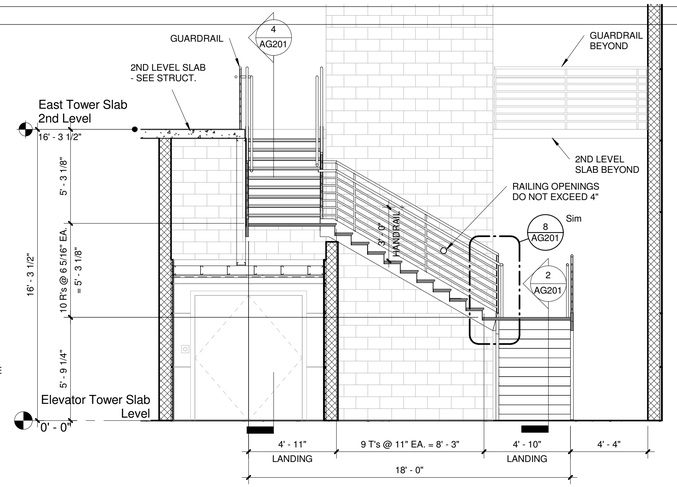

3 SECTION B AT STAIRS (EAST TOWER)
1/4" = 1'-0"

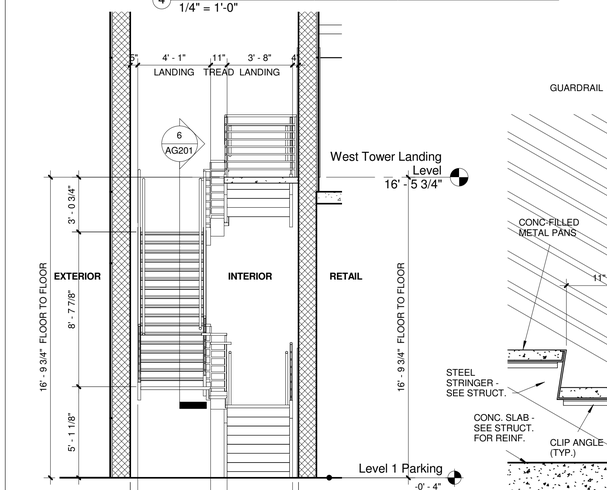

4 SECTION C AT STAIRS (EAST TOWER)
1/4" = 1'-0"

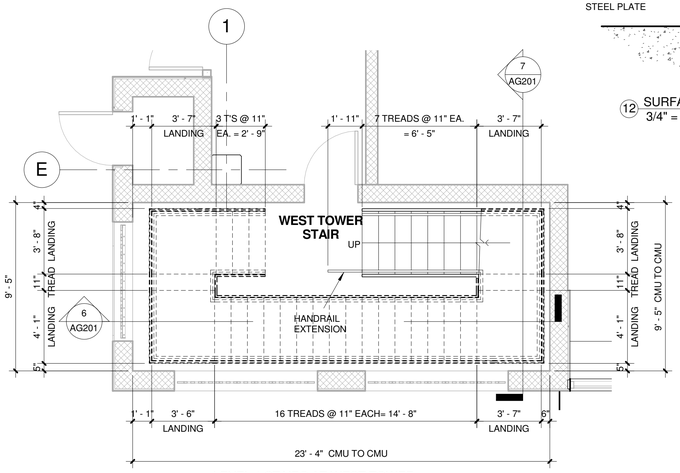

5 LEVEL 1 STAIRS AT WEST TOWER
1/4" = 1'-0"

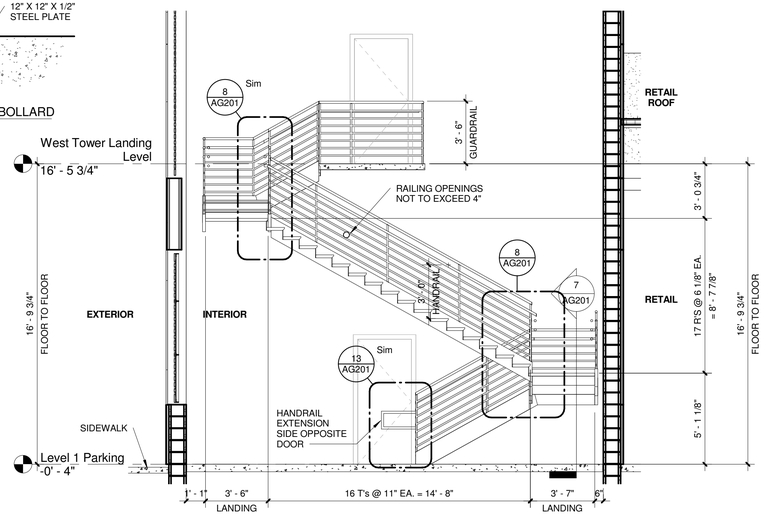

6 SECTION A AT STAIRS (WEST TOWER)
1/4" = 1'-0"

7 SECTION D AT STAIRS (WEST TOWER)
1/4" = 1'-0"

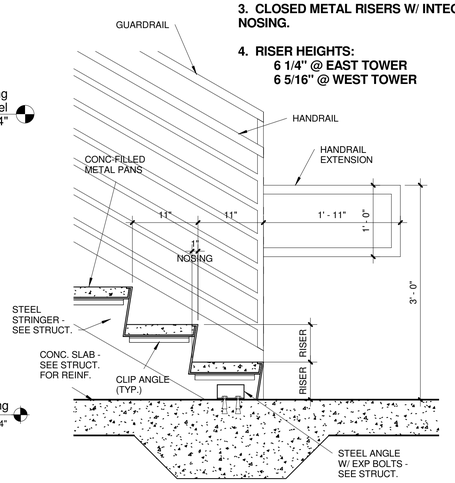

13 STAIR RISERS @ GROUND LEVEL
1" = 1'-0"

STAIR NOTES:

1. ALL RAILING TO BE 1 1/2" DIA. STEEL PIPE.

2. PAINT ALL EXPOSED STEEL.

3. CLOSED METAL RISERS W/ INTEGRAL 1" NOSING.

4. RISER HEIGHTS:
6 1/4" @ EAST TOWER
6 5/16" @ WEST TOWER

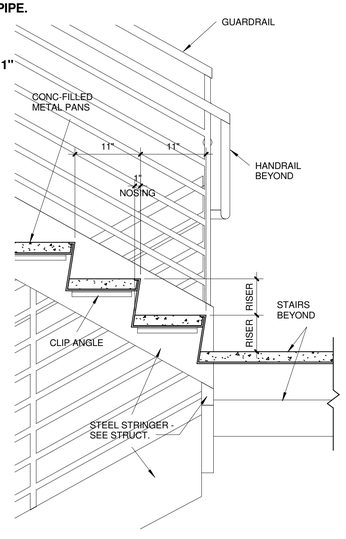

8 STAIR RISERS & RAILING @ CHANGE OF DIRECTION
1" = 1'-0"

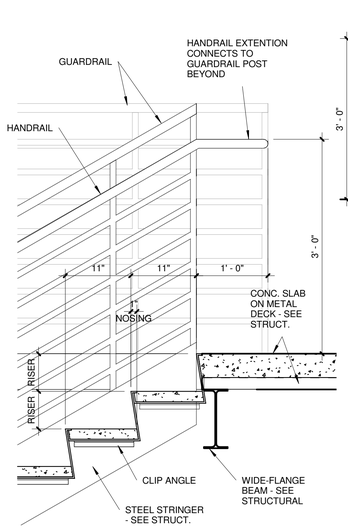

9 STAIR RISERS @ 2ND FLOOR
1" = 1'-0"

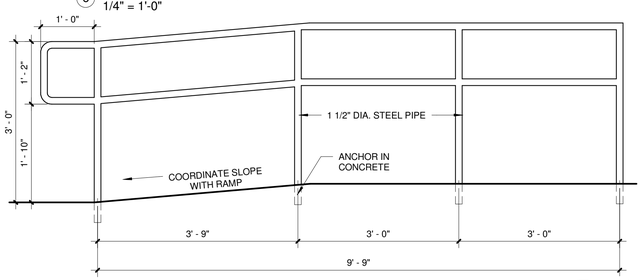

11 RAMP RAILING
3/4" = 1'-0"

100% CONSTRUCTION DOCUMENTS

REFERENCES — BENCHMARKS

No.	DATE	REVISIONS	BY

ARCHITECTS SEAL

REGISTERED ARCHITECT — ROBERTO ANCHONDO — 12937 — STATE OF TEXAS

03/03/2016

SCALE
HOR: SHOWN
VER: SHOWN

DATE 03/03/16
DESIGN BY Designer
DRAWN BY Author
CHKD BY Checker
APPD BY Approver

PROJECT NAME

NORTHGATE TRANSFER CENTER

EL PASO, TEXAS.

CITY OF EL PASO
CAPITAL IMPROVEMENT DEPARTMENT

exigo
ARCHITECTURE INSPIRED BY PURPOSE

SHEET TITLE

VERTICAL CIRCULATION & DETAILS

SHEET

AG201

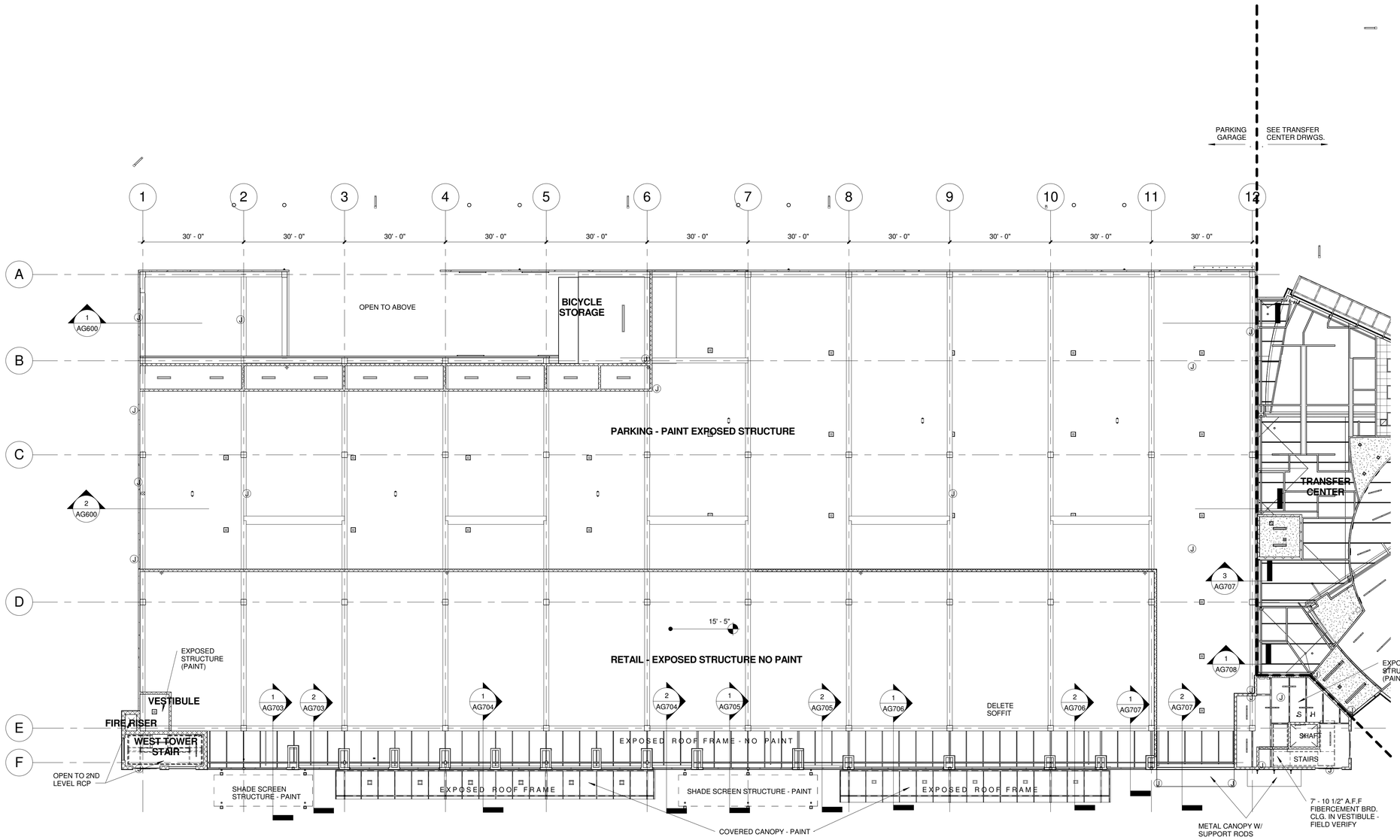

1 LEVEL 1- REFLECTED CEILING PLAN
1/16" = 1'-0"

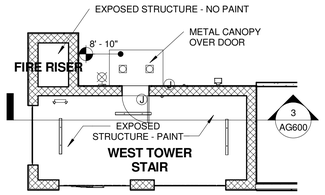

3 LEVEL 2- REFLECTED CEILING PLAN
1/8" = 1'-0"

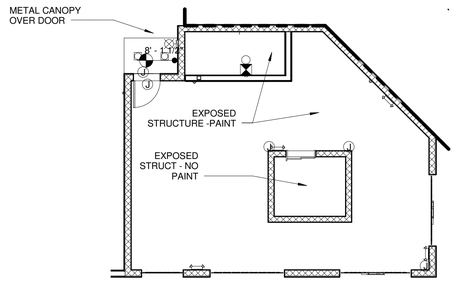

2 LEVEL 2- REFLECTED CEILING PLAN
1/8" = 1'-0"

CEILING LEGEND

- DUCT WORK
- EXHAUST LINE
- WALL-MOUNT VANITY LIGHT
- SUPPLY AIR CEILING DIFFUSER
- RETURN AIR CEILING DIFFUSER
- X'-X" CEILING HEIGHT A.F.F.
- RECESSED CAN-LIGHT
- 8' x 4" FLUORESCENT LIGHT STRIP
- EXIT SIGN REFER TO ELECTRICAL
- EXHAUST FAN
- CEILING LIGHT, FLAT ROUND
- EXTERIOR LIGHT SCONCE
- 1/2" GYP. BOARD, TEXTURE & PAINT
- SD SMOKE DETECTOR: HARDWIRE W/ BATTERY BACK UP
- CO CARBON MONOXIDE DETECTOR

100% CONSTRUCTION DOCUMENTS

exigo ARCHITECTURE INSPIRED BY PURPOSE

REFERENCES – BENCHMARKS

No.	DATE	REVISIONS	BY

ARCHITECT'S SEAL
REGISTERED ARCHITECT ROBERT E. BROWNING 12937 STATE OF TEXAS
03/03/2016

SCALE
HOR: SHOWN
VER: SHOWN

DATE 03/03/16
DESIGN BY Designer
DRAWN BY Author
CHKD BY Checker
APPD BY Approver

PROJECT NAME
NORTHGATE TRANSFER CENTER
EL PASO, TEXAS.

CITY OF EL PASO
CAPITAL IMPROVEMENT DEPARTMENT

SHEET TITLE
REFELECTED CEILING PLANS

SHEET
AG300

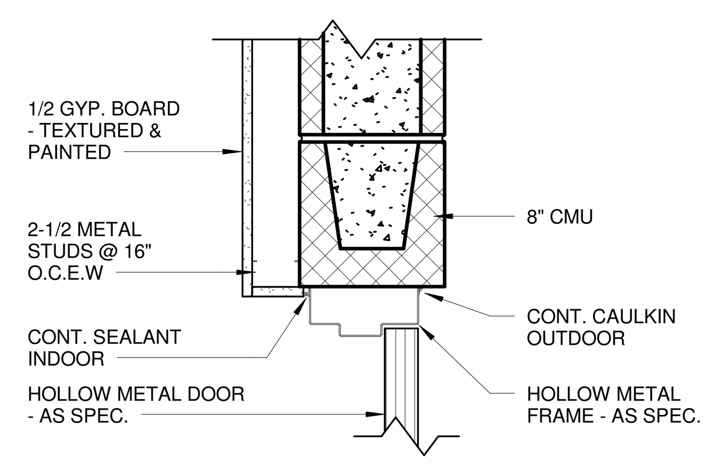

1 HOLLOW METAL DOOR HEAD AT CMU
1 1/2" = 1'-0"

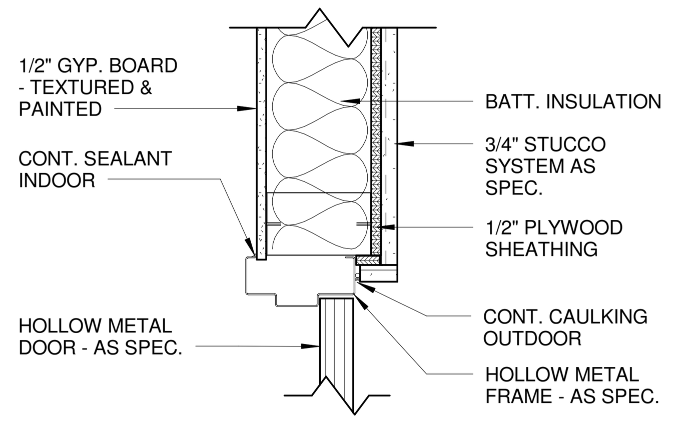

2 HOLLOW METAL DOOR HEAD AT STUCCO WALL
1 1/2" = 1'-0"

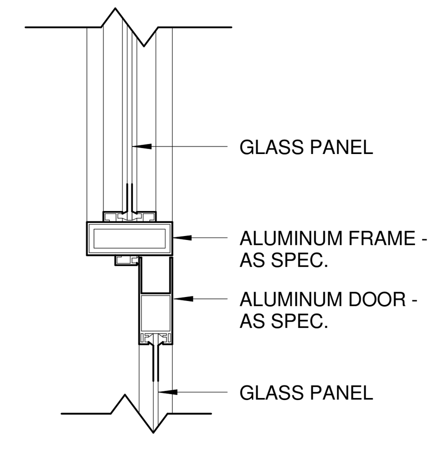

3 ALUMINUM DOOR HEAD AT STOREFRONT
1 1/2" = 1'-0"

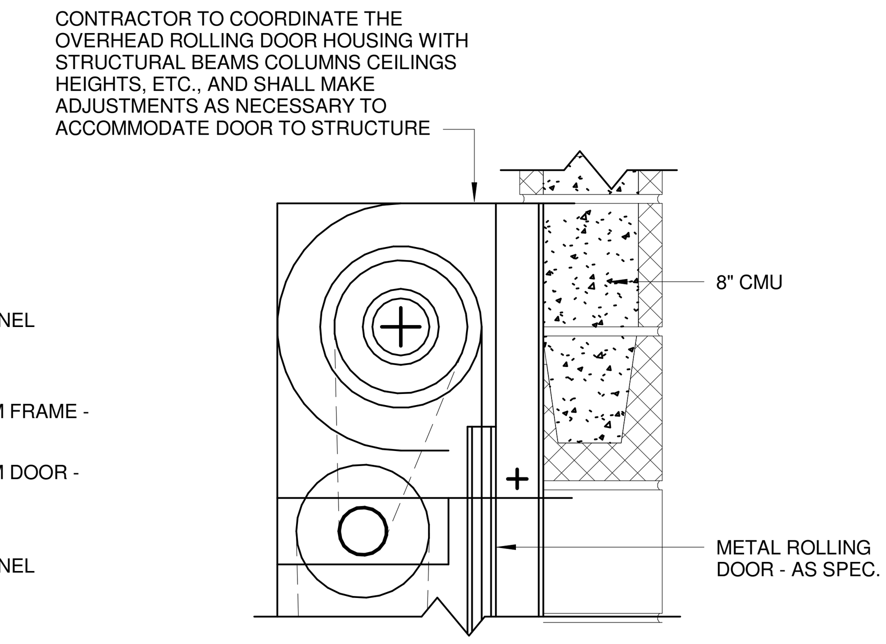

4 METAL ROLLING DOOR HEAD
1 1/2" = 1'-0"

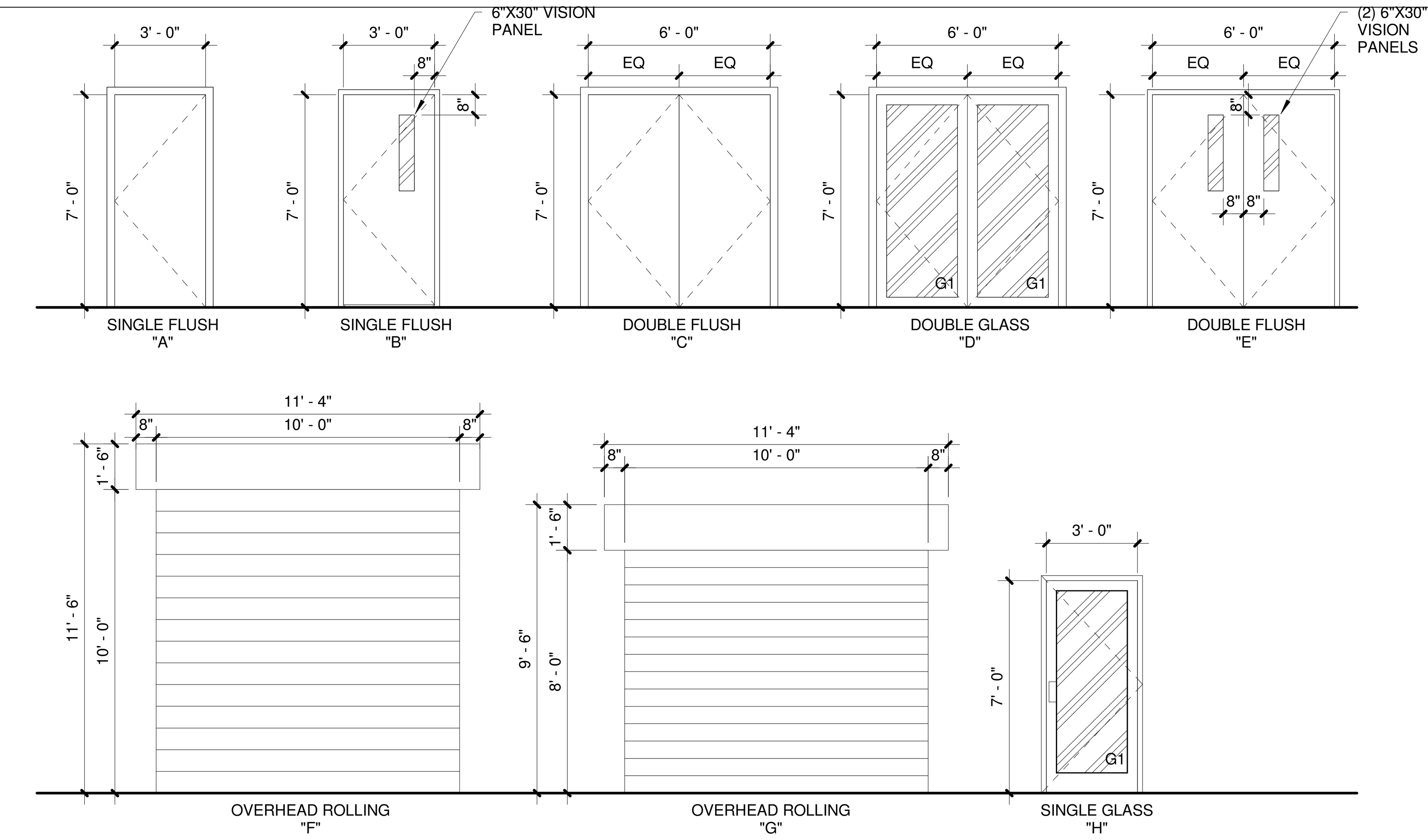

DOOR TYPES
1/4" = 1'-0"

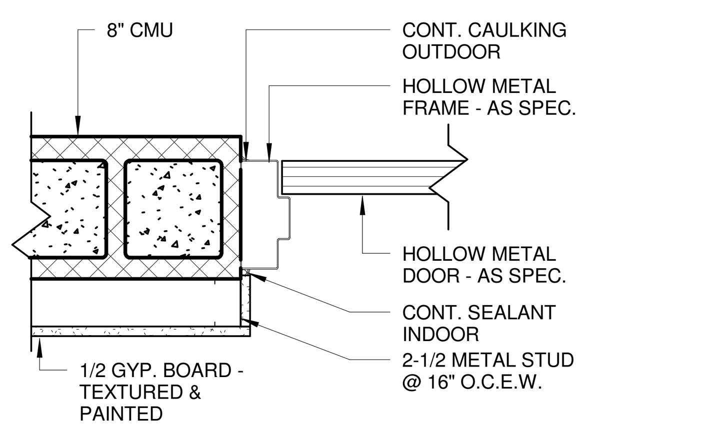

5 HOLLOW METAL DOOR JAMB AT CMU WALL
1 1/2" = 1'-0"

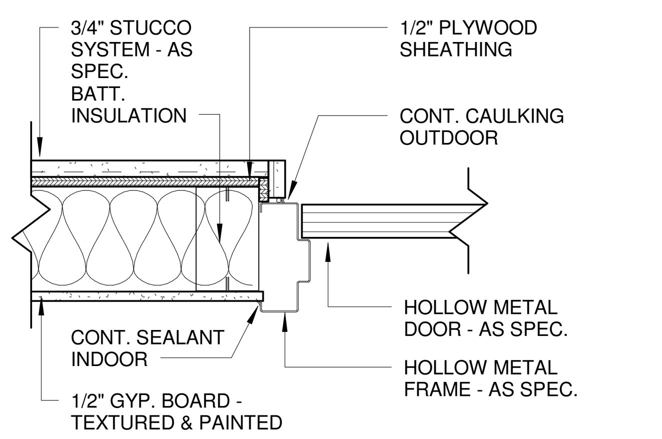

6 HOLLOW METAL DOOR JAMB AT E.I.F.S. WALL
1 1/2" = 1'-0"

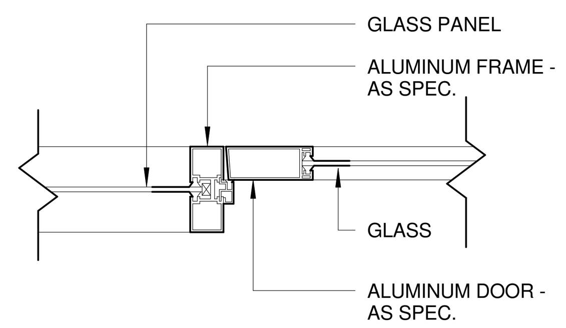

7 ALUMINUM DOOR JAMB AT STOREFRONT
1 1/2" = 1'-0"

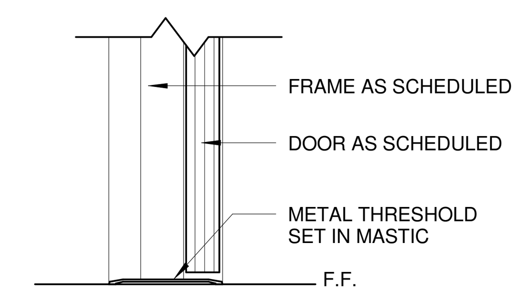

8 TYP. SILL DETAIL
1 1/2" = 1'-0"

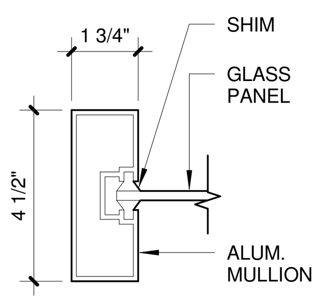

9 MULLION DETAIL A
3" = 1'-0"

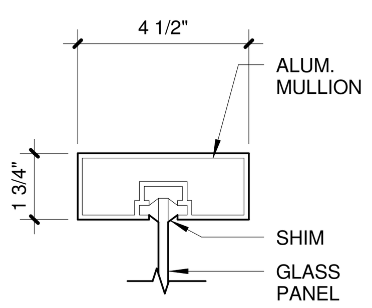

10 MULLION DETAIL B
3" = 1'-0"

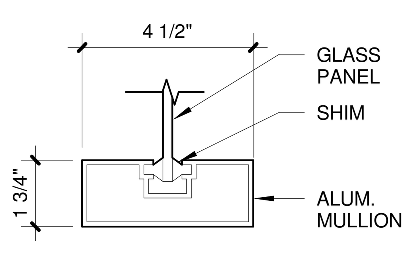

11 MULLION DETAIL C
3" = 1'-0"

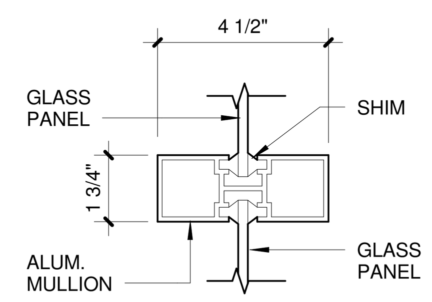

12 MULLION DETAIL D
3" = 1'-0"

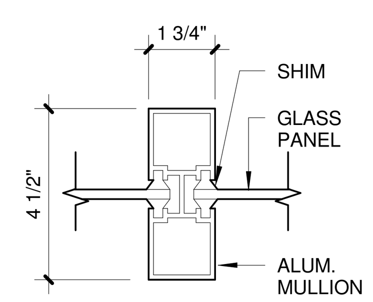

13 MULLION DETAIL E
3" = 1'-0"

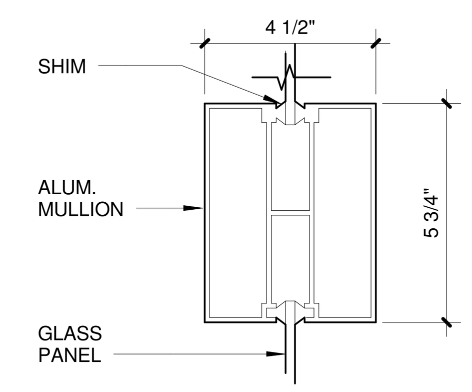

14 MULLION DETAIL F
3" = 1'-0"

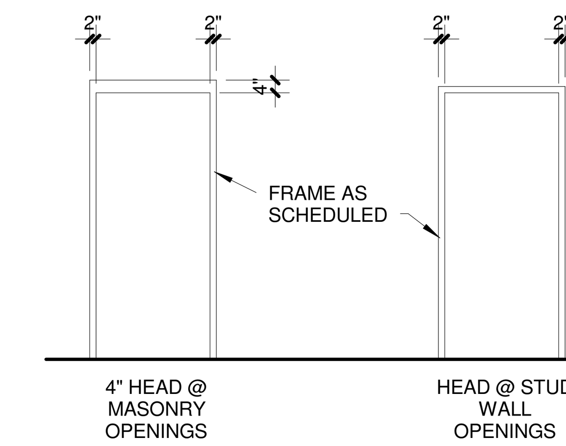

FRAME TYPES
1/4" = 1'-0"

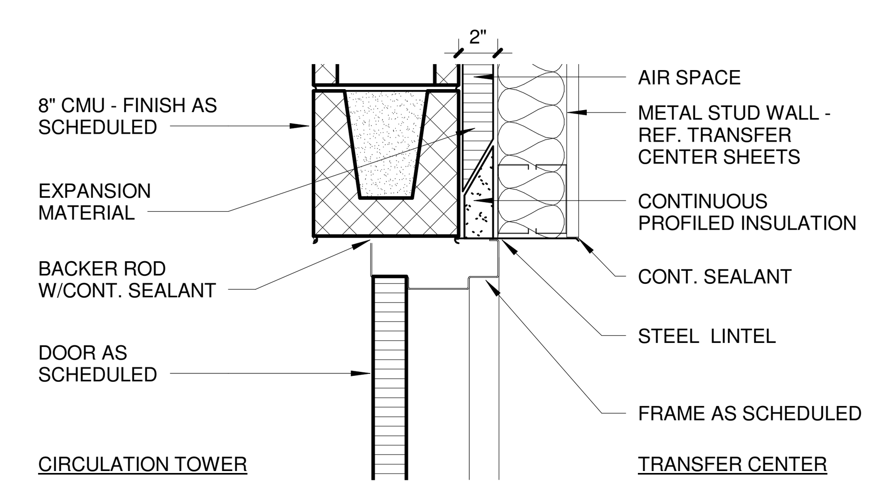

15 DETAIL @ RATED WALL DOOR HEAD
1 1/2" = 1'-0"

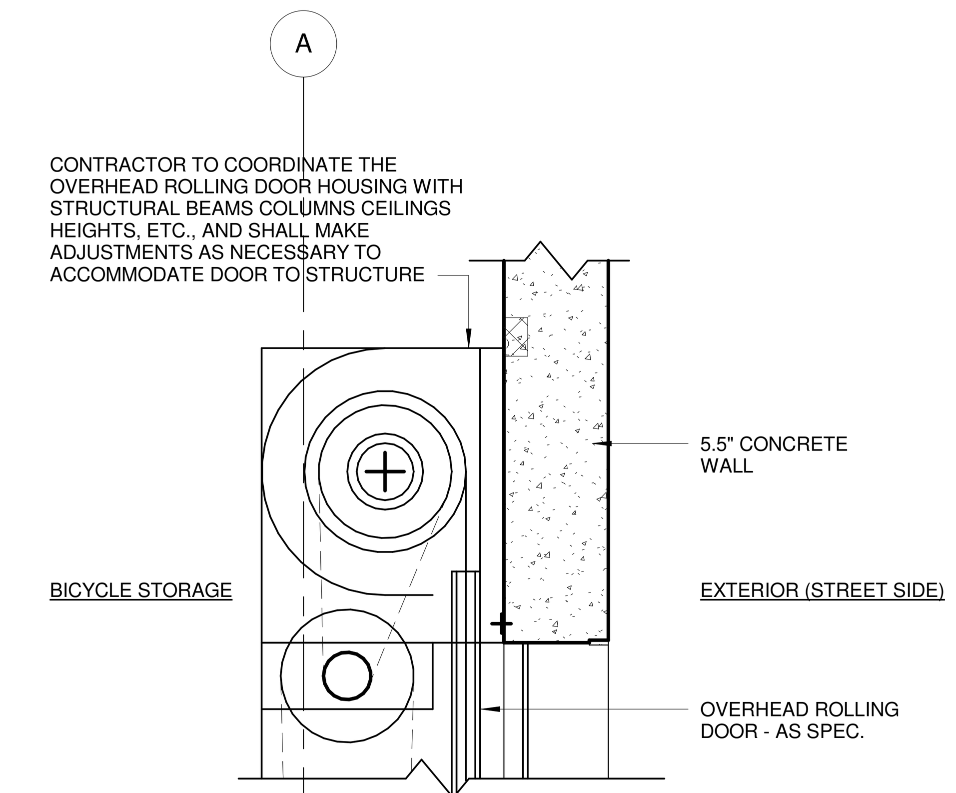

17 OVERHEAD ROLLING DOOR HEAD DETAIL @ BICYCLE STORAGE 104
1 1/2" = 1'-0"

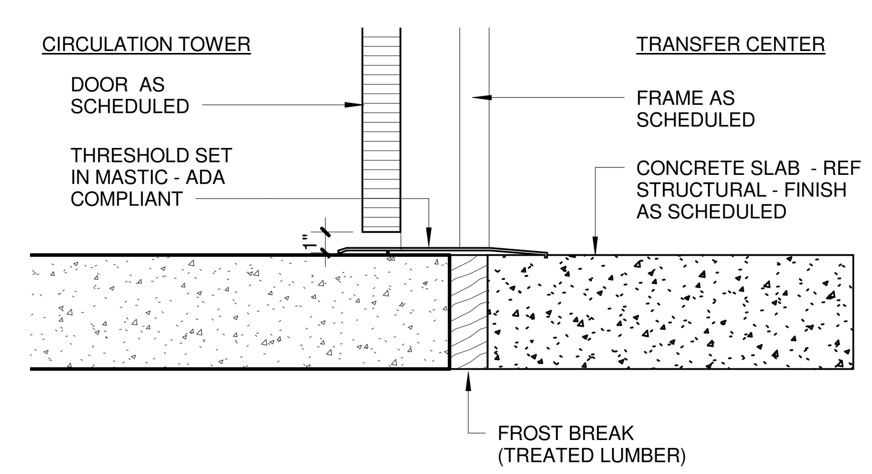

16 DETAIL @ RATED WALL DOOR SILL
1 1/2" = 1'-0"

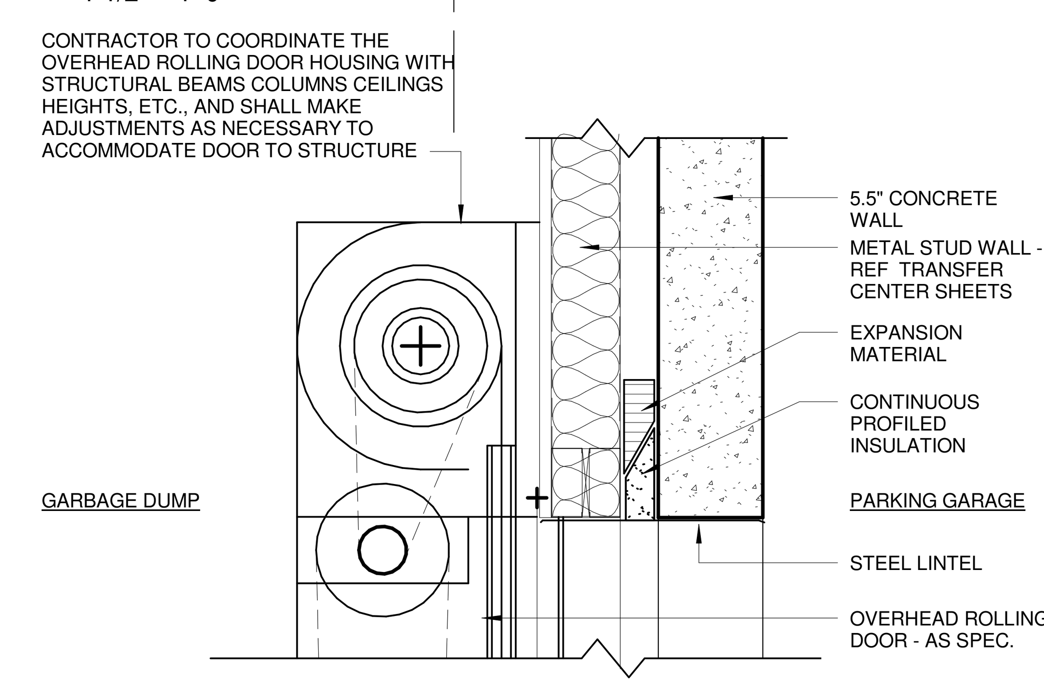

18 OVERHEAD ROLLING DOOR HEAD DETAIL @ GARBAGE DUMP 112
1 1/2" = 1'-0"

100% CONSTRUCTION DOCUMENTS

exigo
ARCHITECTURE INSPIRED BY PURPOSE

REFERENCES -- BENCHMARKS
No. | DATE | REVISIONS | BY

ARCHITECTS SEAL
REGISTERED ARCHITECT
EUGENIO MEJIA
12937
STATE OF TEXAS
03/03/2016

SCALE
HOR: SHOWN
VER: SHOWN
DATE: 03/03/16
DESIGN BY: Designer
DRAWN BY: Author
CHKD. BY: Checker
APPD. BY: Approver

PROJECT NAME
NORTHGATE TRANSFER CENTER
EL PASO, TEXAS.

CITY OF EL PASO
CAPITAL IMPROVEMENT DEPARTMENT

THE CITY OF EL PASO TEXAS

SHEET TITLE
DOOR TYPES, HEAD & JAMB DETAILS

SHEET
AG400

ROOM SCHEDULE

NUMBER	NAME	FLOOR FINISH	BASE FINISH	NORTH WALL MATERIAL	NORTH WALL FINISH	EAST WALL MATERIAL	EAST WALL FINISH	SOUTH WALL MATERIAL	SOUTH WALL FINISH	WEST WALL MATERIAL	WEST WALL FINISH	CEILING FINISH
100	VEST	CERAMIC TILE	VINYL	CMU	PAINT	CMU	PAINT	CMU	PAINT	CMU/CONCRETE	PAINT	Exp. Strct. - Paint
101	FIRE RISER	FINISHED CONCRETE	VINYL	CMU	PAINT	CMU	PAINT	CMU	PAINT	CMU	PAINT	Exp. Strct. - Paint
102	WEST TOWER STAIR	FINISHED CONCRETE	VINYL	CMU	PAINT	CMU	PAINT	CMU	PAINT	CMU	PAINT	Exp. Strct. - Paint
103	CIRCULATION TOWER	CERAMIC TILE	VINYL	CMU	PAINT	CMU	PAINT	CMU	PAINT	CMU	PAINT	Exp. Strct. - Paint
104	BICYCLE STORAGE	FINISHED CONCRETE	VINYL	CMU	PAINT	CMU	PAINT	CMU	PAINT	CMU	PAINT	Exp. Strct. - Paint
105	RETAIL	FINISHED CONCRETE	VINYL	CMU	PAINT	CMU	PAINT	STOREFRONT/ CMU	PAINT	CMU	PAINT	Exp. Strct. - Paint
106	SHAFT	FINISHED CONCRETE	VINYL	CMU	UNFINISHED	CMU	UNFINISHED	CMU	UNFINISHED	CMU	UNFINISHED	Exp. Strct. - Paint
107	STO.	FINISHED CONCRETE	VINYL	CMU	PAINT	CMU	PAINT	CMU	PAINT	CMU	PAINT	Exp. Strct. - Paint
108	STO.	FINISHED CONCRETE	VINYL	CMU	PAINT	CMU	PAINT	CMU	PAINT	CMU	PAINT	Exp. Strct. - Paint
109	STO.	FINISHED CONCRETE	VINYL	CMU	PAINT	CMU	PAINT	CMU	PAINT	CMU	PAINT	Exp. Strct. - Paint
110	STO.	FINISHED CONCRETE	VINYL	CMU	PAINT	CMU	PAINT	CMU	PAINT	CMU	PAINT	Exp. Strct. - Paint
111	I.T.	FINISHED CONCRETE	VINYL	CMU	PAINT	CMU	PAINT	CMU	PAINT	CMU	PAINT	Exp. Strct. - Paint
112	ELEC.	FINISHED CONCRETE	VINYL	CMU	PAINT	CMU	PAINT	CMU	PAINT	CMU	PAINT	Exp. Strct. - Paint
113	TOOL ROOM	FINISHED CONCRETE	VINYL	5.5" CONC	PAINT	CMU	PAINT	CMU	PAINT	CMU	PAINT	Exp. Strct. - Paint
114	PARKING GARAGE	CONCRETE	NONE	CONC. & CMU	PAINT CONC. & CMU	CONC. & FIBERCEMENT BRD.	PAINT CONC.	CMU & FIBERCEMENT BRD.	PAINT CMU	STUCCO ON CMU, CONC., & CMU	PAINT CMU & CONC.	Exp. Strct. - Paint
201	MECH ROOM	FINISHED CONCRETE	VINYL	CMU	PAINT	CMU	PAINT	CMU	PAINT	CMU	PAINT	Exp. Strct. - Paint
202	CIRCULATION TOWER	CERAMIC TILE	VINYL	CMU	PAINT	CMU	PAINT	CMU	PAINT	CMU	PAINT	Exp. Strct. - Paint

DOOR SCHEDULE

MARK	TYPE	FAMILY	WIDTH	HEIGHT	MATERIAL	FIRE RATING	FRAME FINISH	FRAME HEAD	FRAME JAMB	FRAME SILL	FRAME COMMENTS	HARDWARE	OPTIONS
1	B	Single-Flush	3' - 0"	7' - 0"	H.M.		PAINT	1/AG400	5/AG400	8/AG400	W/VISION PANEL	SEE SPEC	
2	A	Single-Flush	3' - 0"	7' - 0"	H.M.		PAINT	1/AG400	5/AG400	8/AG400		SEE SPEC	
3	B	Single-Flush	3' - 0"	7' - 0"	H.M.		PAINT	1/AG400	5/AG400	8/AG400	W/VISION PANEL	SEE SPEC	
4	D	Door-Curtain-Wall-Double-Storefront	6' - 0"	7' - 0"	ALUM.		ANOD.	3/AG400	7/AG400	8/AG400		SEE SPEC	
6	D	Door-Curtain-Wall-Double-Storefront	6' - 0"	7' - 0"	ALUM.		ANOD.	3/AG400	7/AG400	8/AG400		SEE SPEC	
8	D	Curtain Wall-Store Front-Dbl	6' - 0"	7' - 0"	ALUM.		ANOD.	3/AG400	7/AG400	8/AG400		SEE SPEC	
9	D	Door-Curtain-Wall-Double-Storefront	6' - 0"	7' - 0"	ALUM.		ANOD.	3/AG400	7/AG400	8/AG400		SEE SPEC	
12	A	Single-Flush	3' - 0"	7' - 0"	H.M.		PAINT	1/AG400	5/AG400	8/AG400	W/VISION PANEL	SEE SPEC	W/PUSHBUTTON
13	E	Double-Flush	6' - 0"	7' - 0"	H.M.		PAINT	1/AG400	5/AG400	8/AG400	W/VISION PANEL	SEE SPEC	W/PUSHBUTTON
14	E	Double-Flush	6' - 0"	7' - 0"	H.M.		PAINT	1/AG400	5/AG400	8/AG400			W/PUSHBUTTON
15	A	Single-Flush	3' - 0"	7' - 0"	H.M.	1	PAINT	1/AG400	5/AG400	8/AG400		SEE SPEC	W/CARD READER
16	A	Single-Flush	3' - 0"	7' - 0"	H.M.	1	PAINT	1/AG400	5/AG400	8/AG400		SEE SPEC	W/CARD READER
17	A	Single-Flush	3' - 0"	7' - 0"	H.M.	1	PAINT	1/AG400	5/AG400	8/AG400		SEE SPEC	
18	C	Double-Flush	6' - 0"	7' - 0"	H.M.	1	PAINT	1/AG400	5/AG400	8/AG400		SEE SPEC	W/CARD READER
19	A	Single-Flush	3' - 0"	7' - 0"	H.M.	1	PAINT	1/AG400	5/AG400	8/AG400		SEE SPEC	
20	A	Single-Flush	3' - 0"	7' - 0"	H.M.	1	PAINT	1/AG400	5/AG400	8/AG400		SEE SPEC	
21	A	Single-Flush	3' - 0"	7' - 0"	H.M.	1	PAINT	1/AG400	5/AG400	8/AG400		SEE SPEC	
22	A	Single-Flush	3' - 0"	7' - 0"	H.M.	1	PAINT	1/AG400	5/AG400	8/AG400		SEE SPEC	
23	A	Single-Flush	3' - 0"	7' - 0"	H.M.	1	PAINT	1/AG400	5/AG400	8/AG400		SEE SPEC	
24	A	Single-Flush	3' - 0"	7' - 0"	H.M.		PAINT	1/AG400	5/AG400	8/AG400		SEE SPEC	
25	A	Single-Flush	3' - 0"	7' - 0"	H.M.		PAINT	1/AG400	5/AG400	8/AG400		SEE SPEC	
26	A	Single-Flush	3' - 0"	7' - 0"	H.M.		PAINT	1/AG400	5/AG400	8/AG400		SEE SPEC	
27	A	Single-Flush	3' - 0"	7' - 0"	H.M.		PAINT	1/AG400	5/AG400	8/AG400		SEE SPEC	
28	A	Single-Flush	3' - 0"	7' - 0"	H.M.		PAINT	1/AG400	5/AG400	8/AG400		SEE SPEC	W/CARD READER
29	B	Single-Flush	3' - 0"	7' - 0"	H.M.		PAINT	1/AG400	5/AG400	8/AG400	W/VISION PANEL	SEE SPEC	
30	B	Single-Flush	3' - 0"	7' - 0"	H.M.		PAINT	1/AG400	5/AG400	8/AG400	W/VISION PANEL	SEE SPEC	W/PUSHBUTTON
31	A	Single-Flush	3' - 0"	7' - 0"	H.M.		PAINT	1/AG400	5/AG400	8/AG400		SEE SPEC	W/CARD READER
32	F	Overhead-Rolling	10' - 0"	10' - 0"	STL.		BY MFGR.	18/AG400	---	---		SEE SPEC	
33	D	Door-Curtain-Wall-Double-Storefront	6' - 0"	7' - 0"	ALUM.		ANOD.	3/AG400	7/AG400	8/AG400		SEE SPEC	
34	H	Curtain Wall Storefront Single	3' - 0"	7' - 0"	ALUM.		ANOD.	3/AG400	7/AG400	8/AG400		SEE SPEC	
35	G	Overhead-Rolling	10' - 0"	8' - 0"	STL.		BY MFGR.	17/AG400	---	---		SEE SPEC	
39	A	Single-Flush	3' - 0"	7' - 0"	H.M.		PAINT	1/AG400	5/AG400	8/AG400		SEE SPEC	W/CARD READER
40	C	Double-Flush	8' - 0"	7' - 0"	H.M.		PAINT	1/AG400	5/AG400	8/AG400		SEE SPEC	
41	D	Door-Curtain-Wall-Double-Storefront	6' - 0"	7' - 0"	ALUM.		ANOD.	3/AG400	7/AG400	8/AG400		SEE SPEC	
42	D	Door-Curtain-Wall-Double-Storefront	5' - 11 1/2"	7' - 0"	ALUM.		ANOD.	3/AG400	7/AG400	8/AG400		SEE SPEC	

GLAZING SCHEDULE

TYPE	GLASS
G1	1" - DOUBLE INSULATED - LOW E - TEMPERED - TINTED
G2	1" - DOUBLE INSULATED - LOW E - TINTED

SAFETY GLASS TO COMPLY AS PER ALL CODE REQUIREMENTS

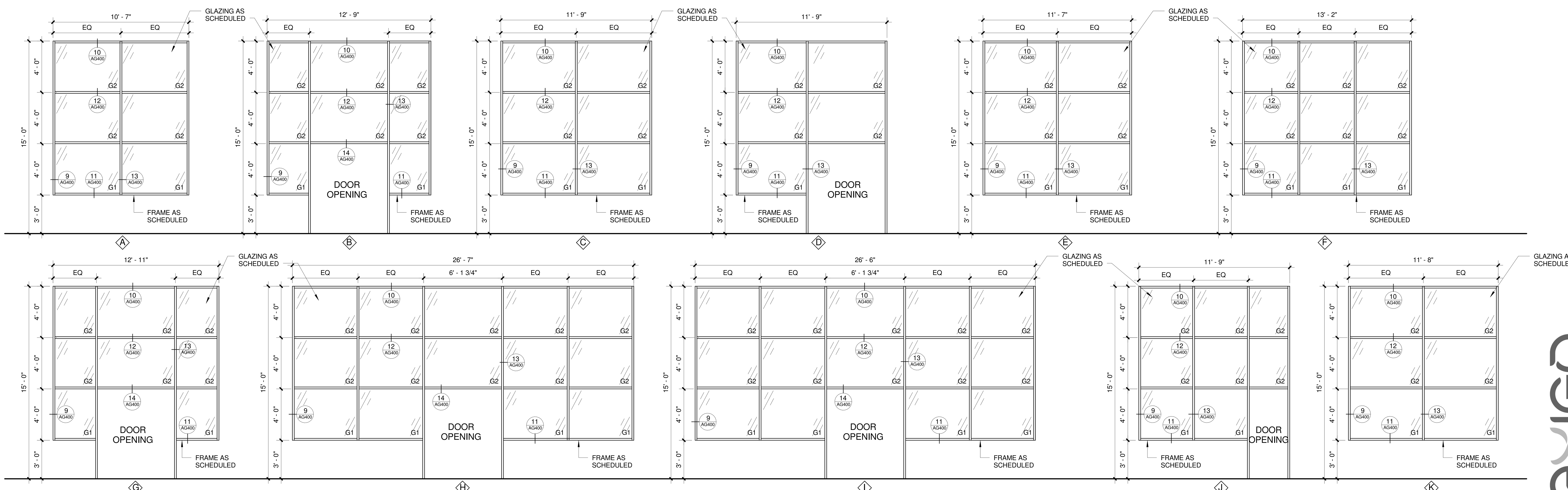

WINDOW TYPES
1/4" = 1'-0"

ARCHITECTURE INSPIRED BY PURPOSE

100% CONSTRUCTION DOCUMENTS

REFERENCES -- BENCHMARKS

ARCHITECTS SEAL

03/03/2016

SCALE

PROJECT NAME

NORTHGATE TRANSFER CENTER

EL PASO, TEXAS.

CITY OF EL PASO

CAPITAL IMPROVEMENT DEPARTMENT

SHEET TITLE

SCHEDULES AND WINDOW TYPES

SHEET

AG401

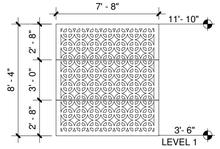

PANEL "A"
WEST TOWER
SOUTH ELEVATION (2)

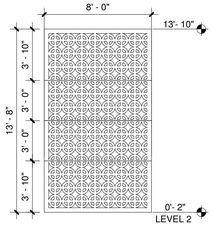

PANEL "B"
WEST TOWER SOUTH
ELEVATION (1)

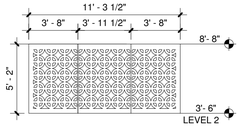

PANEL "C"
GARAGE SECOND FLOOR
SOUTH ELEVATION (6)

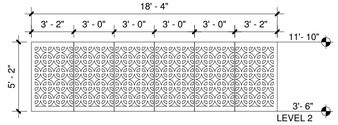

PANEL "D"
GARAGE ENTRANCE
SOUTH ELEVATION (1)

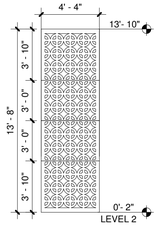

PANEL "E"
EAST TOWER
SOUTH ELEVATION (1)

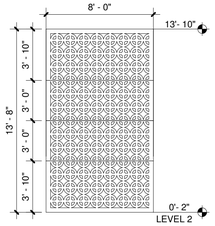

PANEL "F"
EAST TOWER
SOUTH ELEVATION (1)

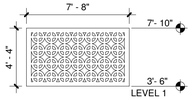

PANEL "G"
EAST TOWER
SOUTH ELEVATION (2)

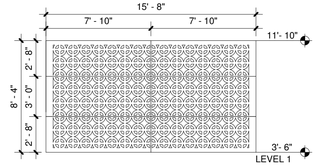

PANEL "H"
GARAGE
WEST ELEVATION (2)

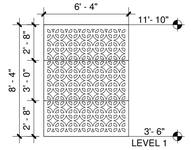

PANEL "I"
WEST TOWER
WEST ELEVATION (1)

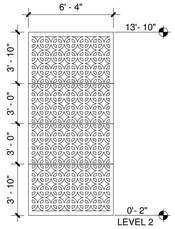

PANEL "K"
WEST TOWER
WEST ELEVATION (1)

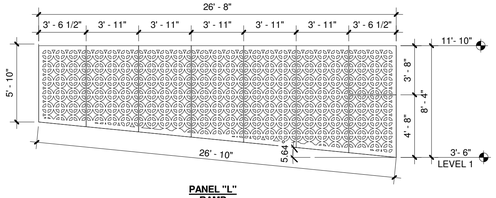

PANEL "L"
RAMP
NORTH ELEVATION (1)

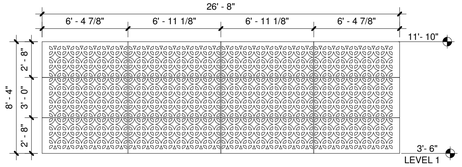

PANEL "M"
GARAGE
NORTH ELEVATION (5)

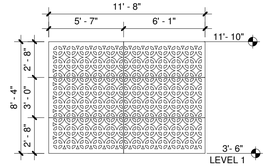

PANEL "N"
GARAGE
NORTH ELEVATION (1)

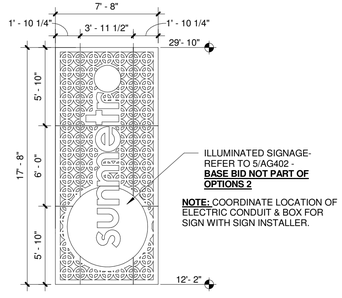

PANEL "O"
TOWERS
NORTH ELEVATION (3)

SCREEN PANEL TYPES
3/16" = 1'-0"

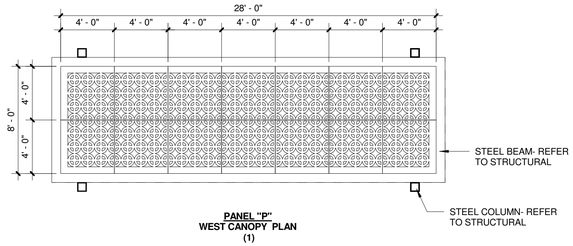

PANEL "P"
WEST CANOPY PLAN
(1)

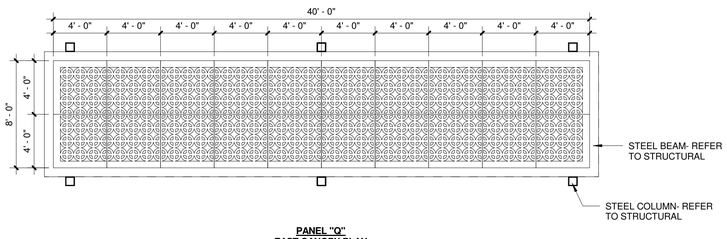

PANEL "Q"
EAST CANOPY PLAN
(1)

CANOPY SCREEN PANEL TYPES
3/16" = 1'-0"

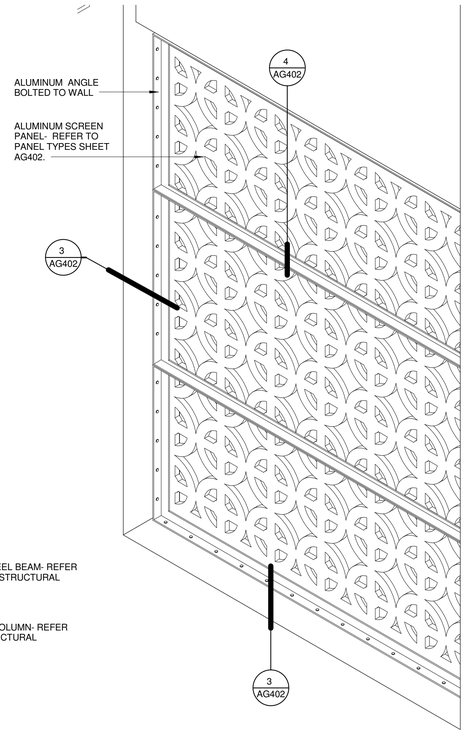

SCREEN PANEL ISOMETRIC TYP.
1

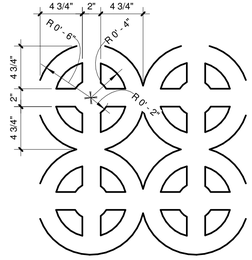

SCREEN PANEL PATTERN TYP.
2
1 1/2" = 1'-0"

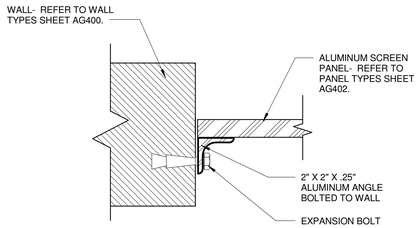

SCREEN PANEL DETAIL AT WALL
3
3" = 1'-0"

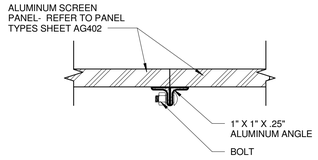

SCREEN PANEL DETAIL AT CONNECTION
4
3" = 1'-0"

NOTE: PAINT SCREENS AS SPECIFIED.

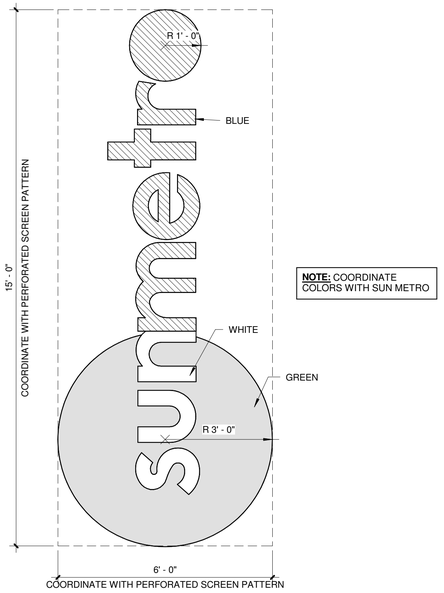

ILLUMINATED SIGNAGE - BASE BID NOT PART OF OPTION 2
5
1/2" = 1'-0"

100% CONSTRUCTION DOCUMENTS

REFERENCES – BENCHMARKS

No.	DATE	REVISIONS	BY

ARCHITECT'S SEAL

REGISTERED ARCHITECT
BRANDON WEEKS
12937
STATE OF TEXAS

03/03/2016

SCALE
HOR: SHOWN
VER: SHOWN

DATE 03/03/16
DESIGN BY Designer
DRAWN BY Author
CHKD BY Checker
APPD BY Approver

PROJECT NAME
NORTHGATE TRANSFER CENTER
EL PASO, TEXAS.

CITY OF EL PASO
CAPITAL IMPROVEMENT DEPARTMENT

exigo
ARCHITECTURE INSPIRED BY PURPOSE

SHEET TITLE
SCREEN PANEL TYPES OPTION 2

SHEET
AG402

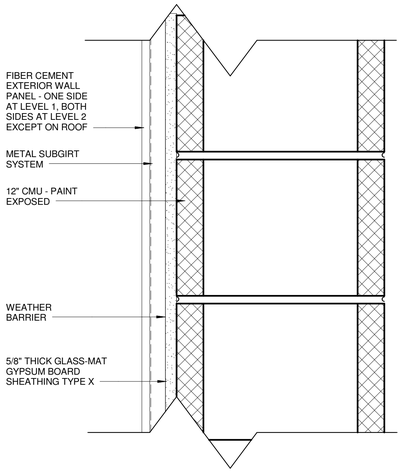

E1

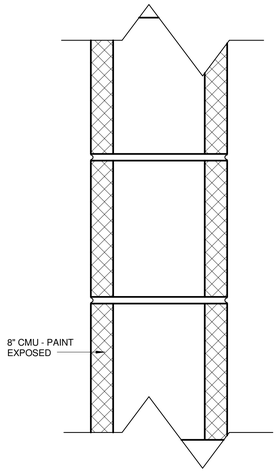

E2

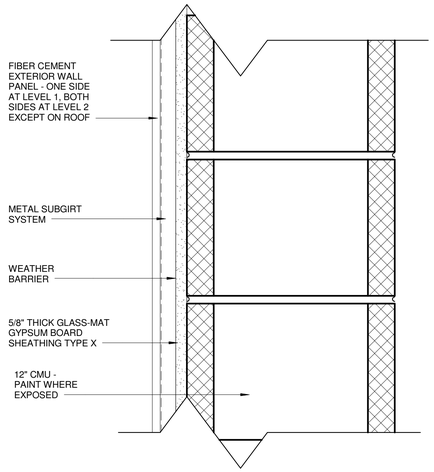

E3

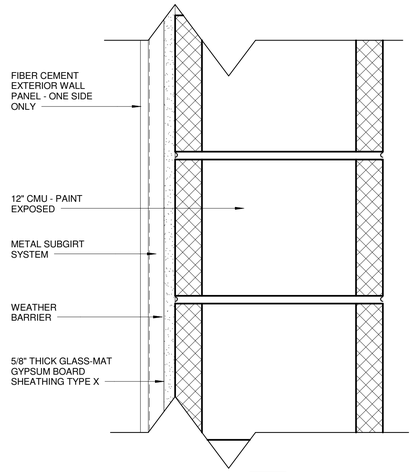

E4

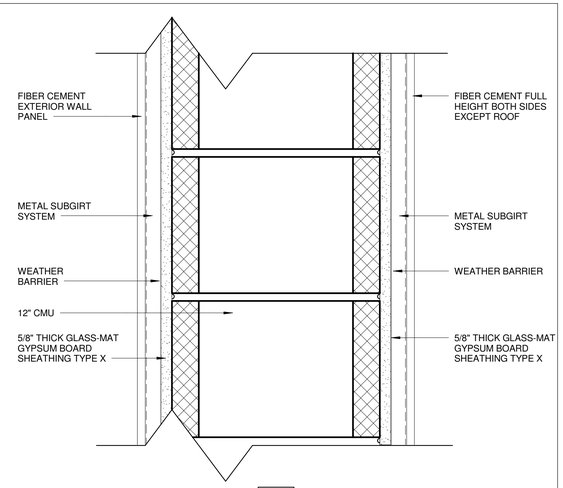

E5

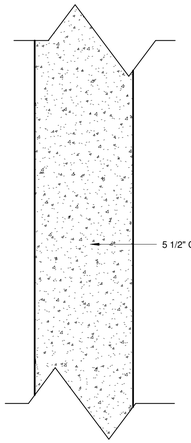

E6

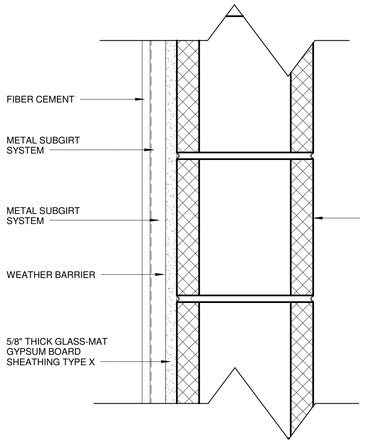

E7

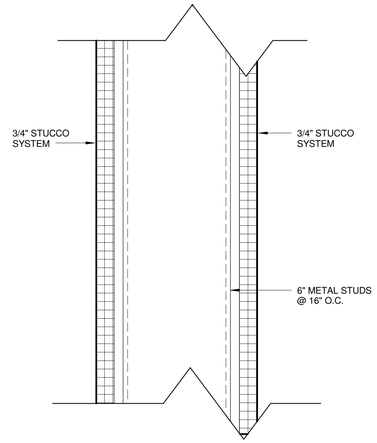

E8

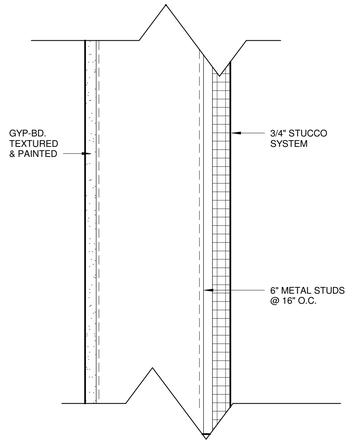

E9

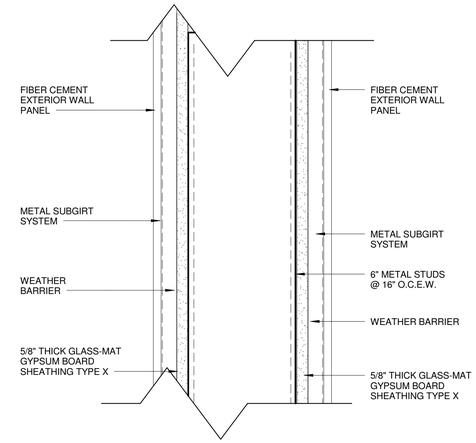

E10

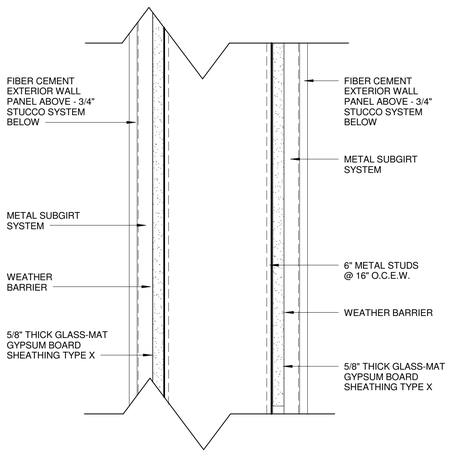

E11

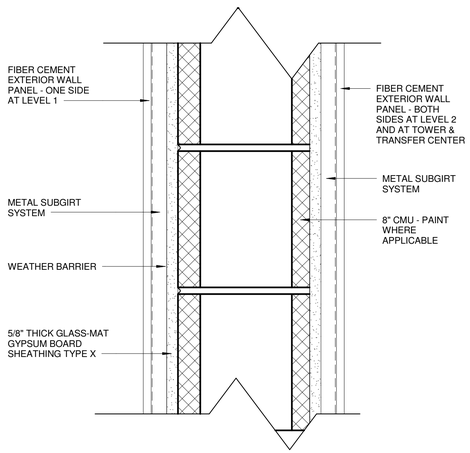

E12

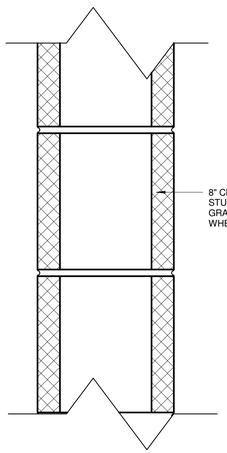

E13

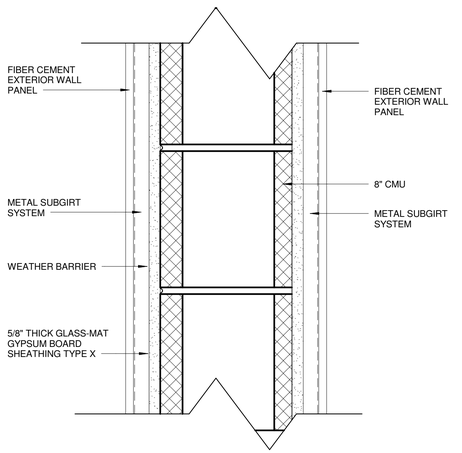

E14

WALL TYPES
3" = 1'-0"

100% CONSTRUCTION DOCUMENTS

REFERENCES – BENCHMARKS

No.	DATE	REVISIONS	BY

ARCHITECT'S SEAL

REGISTERED ARCHITECTS STATE OF TEXAS 12937

03/03/2016

SCALE
HOR. SHOWN
VER. SHOWN

DATE 03/03/16
DESIGN BY Designer
DRAWN BY Author
CHKD BY Checker
APPD BY Approver

PROJECT NAME

NORTHGATE TRANSFER CENTER

EL PASO, TEXAS.

CITY OF EL PASO
CAPITAL IMPROVEMENT DEPARTMENT

THE CITY OF EL PASO TEXAS

exigo
ARCHITECTURE INSPIRED BY PURPOSE

SHEET TITLE

WALL TYPES

SHEET

AG403

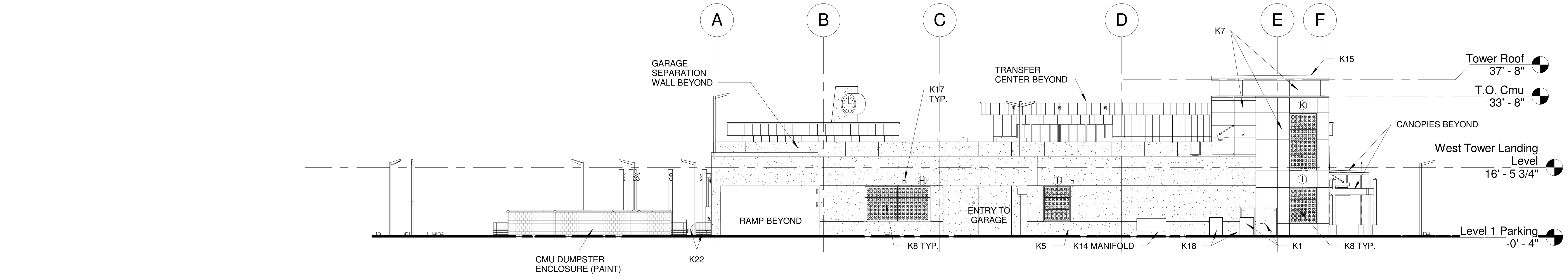

2 WEST ELEVATION
1/16" = 1'-0"

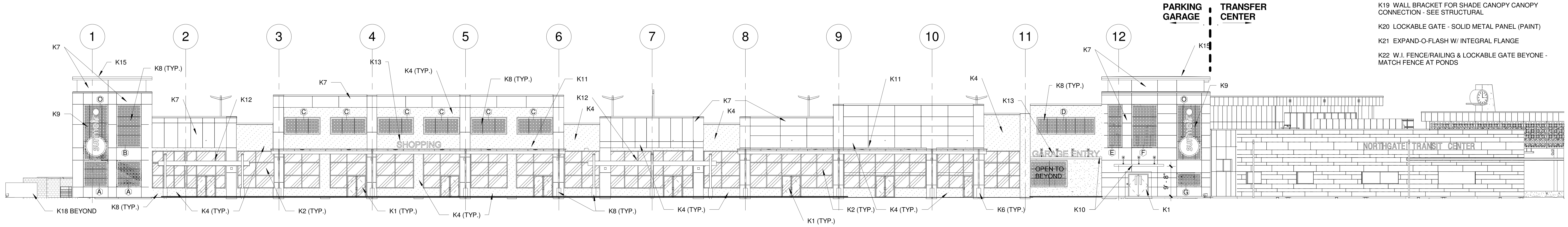

1 SOUTH ELEVATION
1/16" = 1'-0"

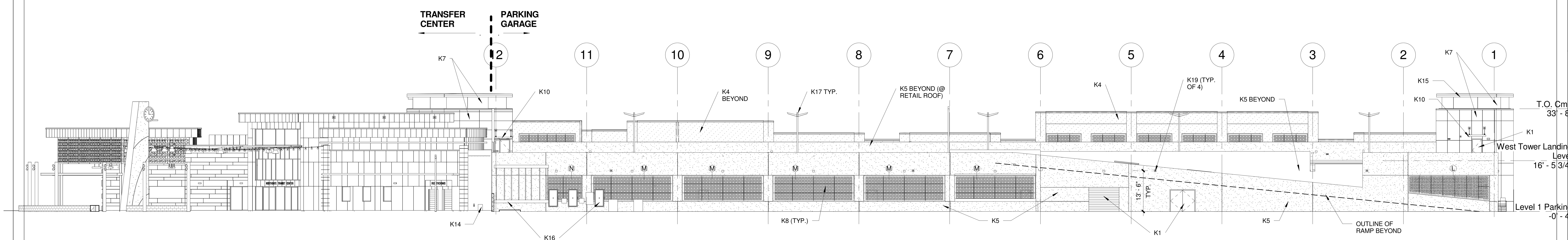

4 NORTH ELEVATION
1/16" = 1'-0"

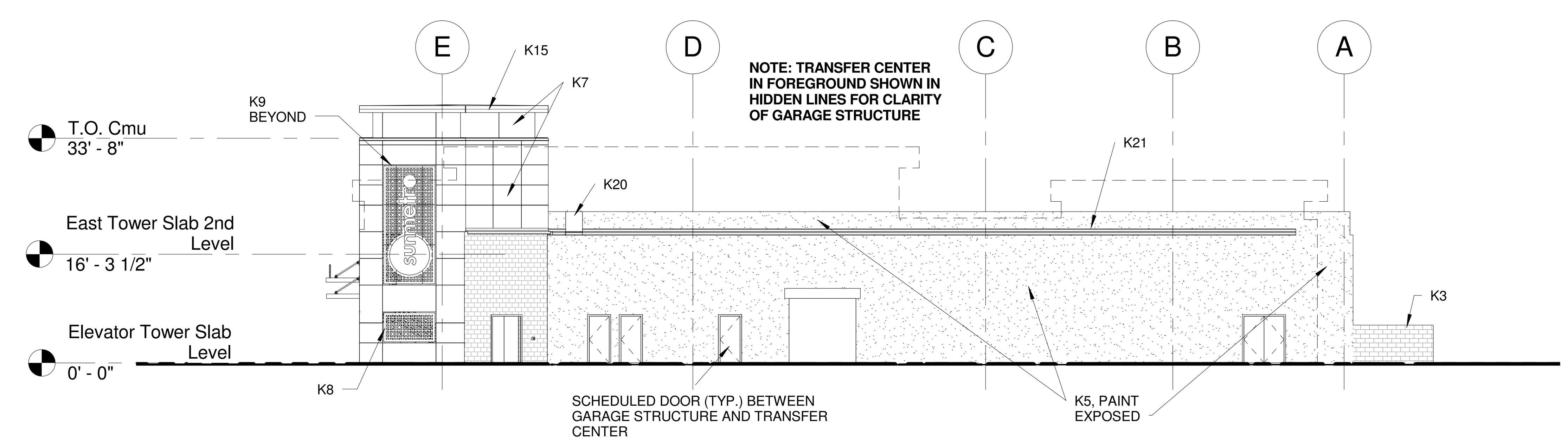

3 EAST ELEVATIONS
1/16" = 1'-0"

KEYED NOTES

K1 DOOR AS SCHEDULED
K2 STOREFRONT AS SCHEDULED
K3 CMU SCREENWALL (PAINT) FOR ELECTRICAL
K4 STUCCO ON STUD WALL
K5 CONCRETE WALL - PAINT
K6 CONCRETE POST PEDESTAL
K7 FIBER CEMENT BOARD FINISH
K8 ALUMINUM SHADING SCREEN- REFER TO SHEET AG402
K9 BACK LIT PANEL WITH LOGO
K10 METAL CANOPY SUSPENDED W/ SUPPORT RODS- REFER TO 20/AG900
K11 METAL CANOPY ON METAL POSTS
K12 METAL FRAME W/ ALUMINUM SHADING SCREEN & METAL POSTS
K13 SIGNAGE AS SPECIFIED
K14 GAS METER - SEE PLUMBING
K15 FLAT ROOF
K16 ELECTRIC PANELS - SEE ELECTRICAL
K17 LIGHT FIXTURE - SEE ELECTRICAL
K18 BACKFLOW PREVENTOR - SEE PLUMBING
K19 WALL BRACKET FOR SHADE CANOPY CANOPY CONNECTION - SEE STRUCTURAL
K20 LOCKABLE GATE - SOLID METAL PANEL (PAINT)
K21 EXPAND-O-FLASH W/ INTEGRAL FLANGE
K22 W.I. FENCE/RAILING & LOCKABLE GATE BEYONE - MATCH FENCE AT PONDS

exigo ARCHITECTURE INSPIRED BY PURPOSE

100% CONSTRUCTION DOCUMENTS

REFERENCES -- BENCHMARKS

ARCHITECTS SEAL
03/03/2016

PROJECT NAME
NORTHGATE TRANSFER CENTER
EL PASO, TEXAS.

CITY OF EL PASO
CAPITAL IMPROVEMENT DEPARTMENT

SHEET TITLE
EXTERIOR ELEVATIONS

SHEET
AG500

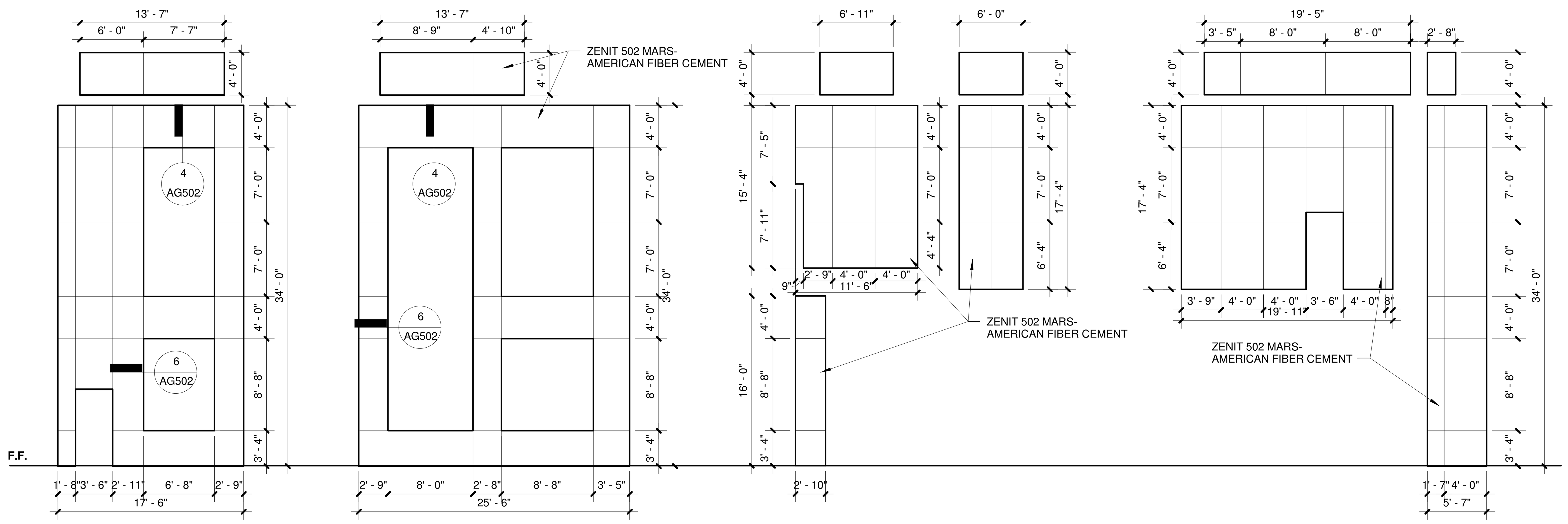

1 PANEL ELEVATIONS AT WEST TOWER
1/8" = 1'-0"

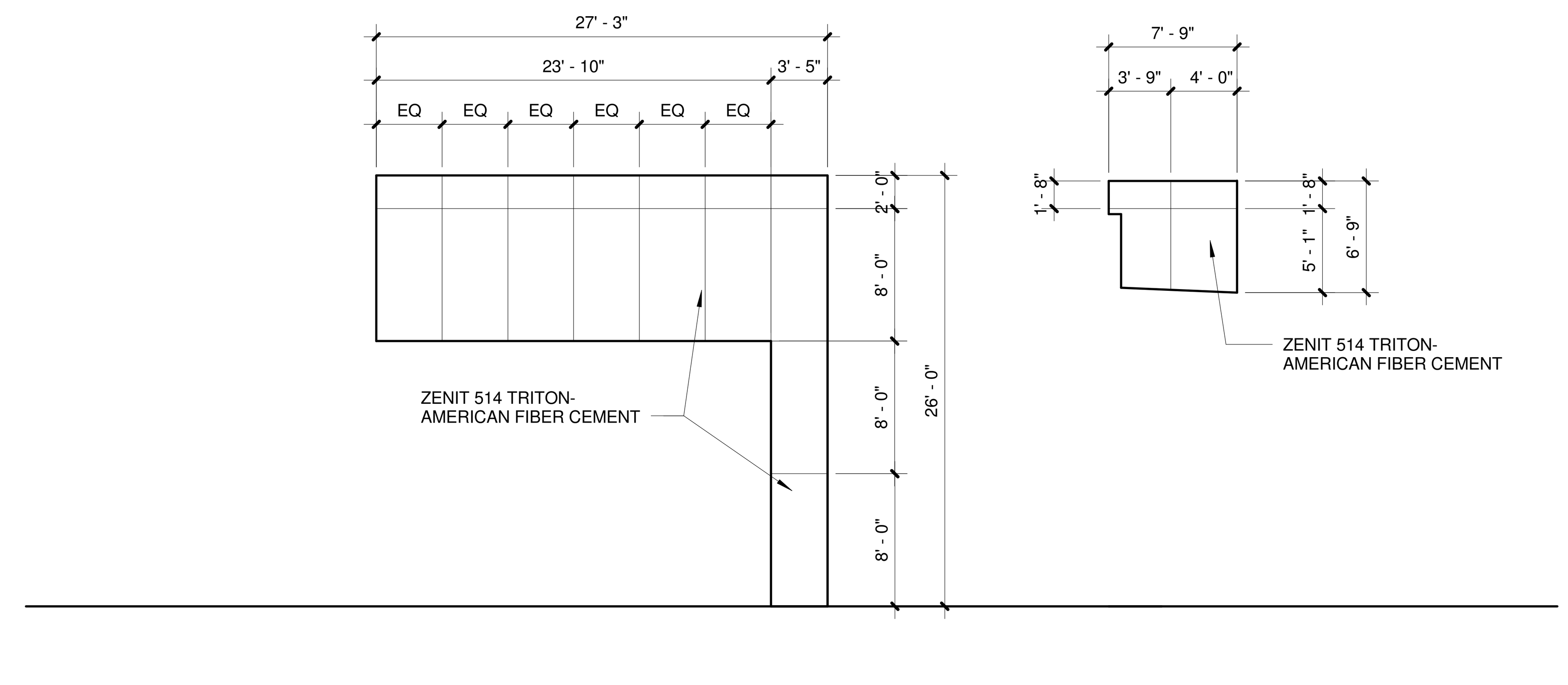

2 PANEL SOUTH ELEVATION "A" AT RETAIL
1/8" = 1'-0"

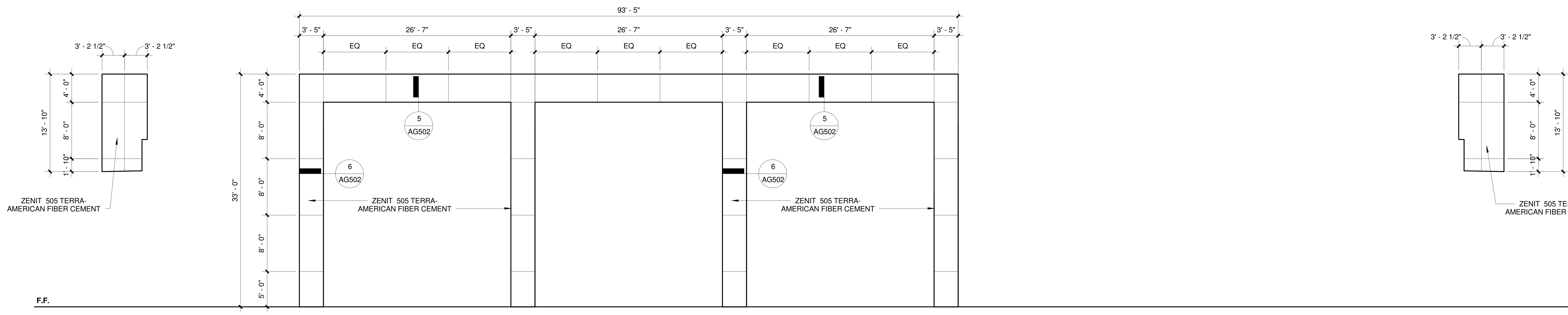

3 PANEL SOUTH ELEVATION "B" AT RETAIL
1/8" = 1'-0"

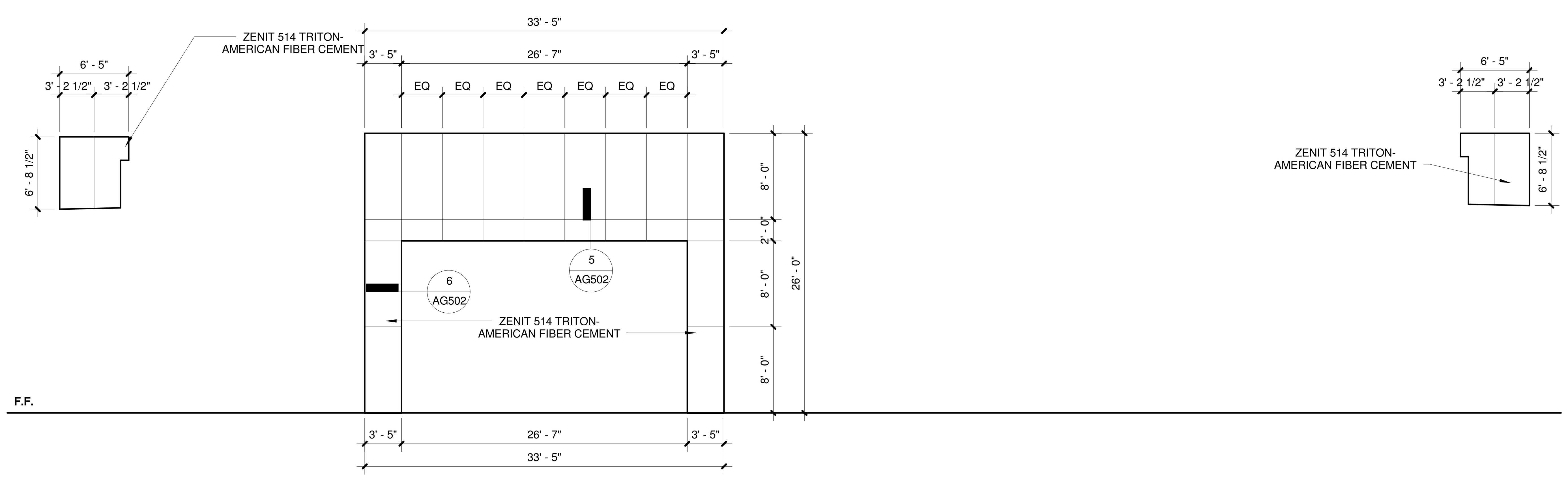

4 PANEL SOUTH ELEVATION "C" AT RETAIL
1/8" = 1'-0"

exIGO
ARCHITECTURE INSPIRED BY PURPOSE

100% CONSTRUCTION DOCUMENTS

REFERENCES -- BENCHMARKS

ARCHITECTS SEAL
03/03/2016

PROJECT NAME
NORTHGATE TRANSFER CENTER
EL PASO, TEXAS.

CITY OF EL PASO
CAPITAL IMPROVEMENT DEPARTMENT

SHEET TITLE
ENLARGED EXTERIOR ELEVATIONS

SHEET
AG501

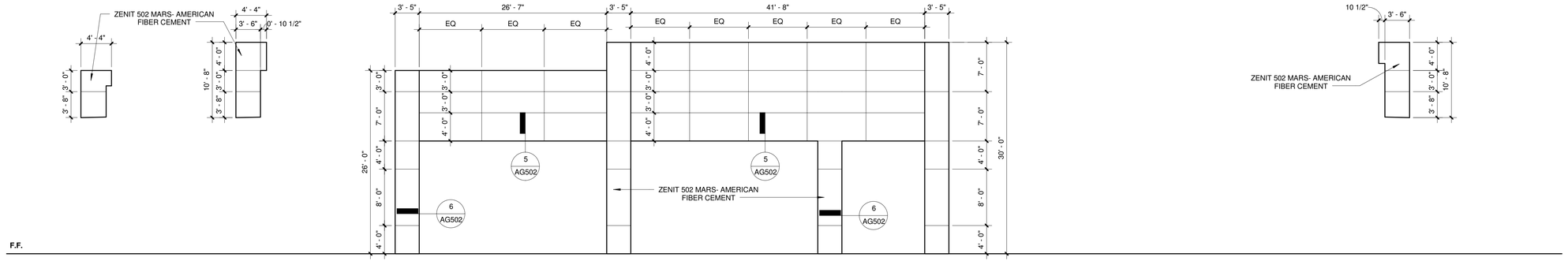

LEFT VIEW **LEFT- INTERIOR VIEW** **FRONT VIEW** **RIGHT VIEW**

1 PANEL SOUTH ELEVATION "D" AT RETAIL
1/8" = 1'-0"

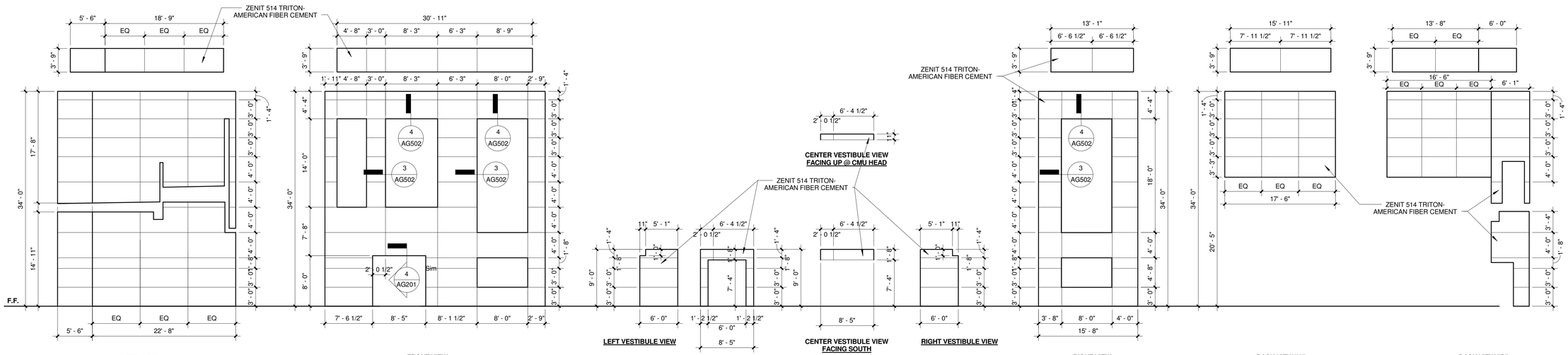

LEFT VIEW **FRONT VIEW** **RIGHT VIEW** **BACK VIEW "A"** **BACK VIEW "B"**

2 PANEL ELEVATIONS AT EAST TOWER
1/8" = 1'-0"

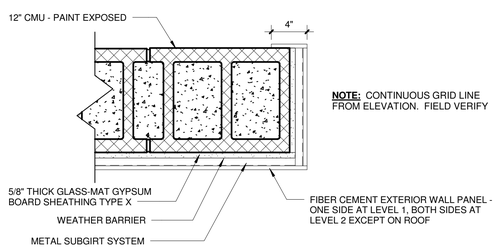

3 JAMB DETAIL AT CMU WALL
1 1/2" = 1'-0"

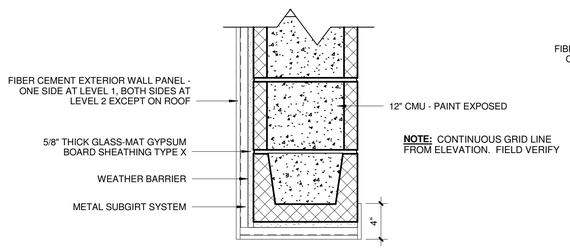

4 HEAD DETAIL AT SHADESCREENS @ CMU WALL
1 1/2" = 1'-0"

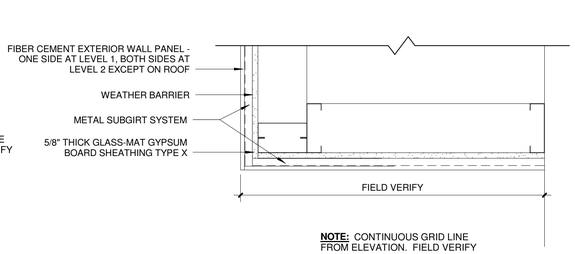

5 HEAD DETAIL AT METAL STUD WALL
1 1/2" = 1'-0"

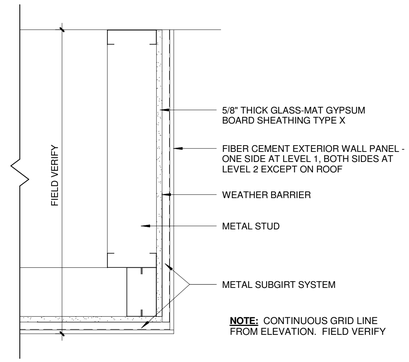

6 JAMB DETAIL AT METAL STUD WALL
1 1/2" = 1'-0"

100% CONSTRUCTION DOCUMENTS

REFERENCES — BENCHMARKS

No.	DATE	REVISIONS	BY

ARCHITECT'S SEAL
REGISTERED ARCHITECT ROBERT MICHAEL ZACHRY 12937 STATE OF TEXAS
03/03/2016

SCALE
HOR: SHOWN
VER: SHOWN

DATE 03/03/16
DESIGN BY Designer
DRAWN BY Author
CHKD BY Checker
APPD BY Approver

PROJECT NAME
NORTHGATE TRANSFER CENTER
EL PASO, TEXAS.

CITY OF EL PASO
CAPITAL IMPROVEMENT DEPARTMENT

exigo ARCHITECTURE INSPIRED BY PURPOSE

SHEET TITLE
ENLARGED EXTERIOR ELEVATIONS

SHEET
AG502

1 PERSPECTIVE AT 96'-0"

3 SOUTHWEST PERSPECTIVE

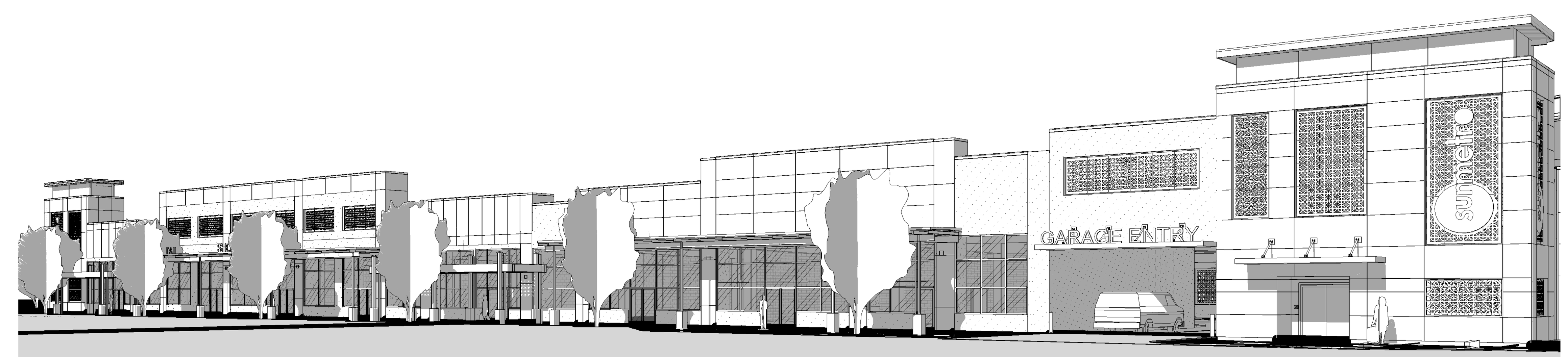

2 SOUTHEAST PERSPECTIVE VIEW

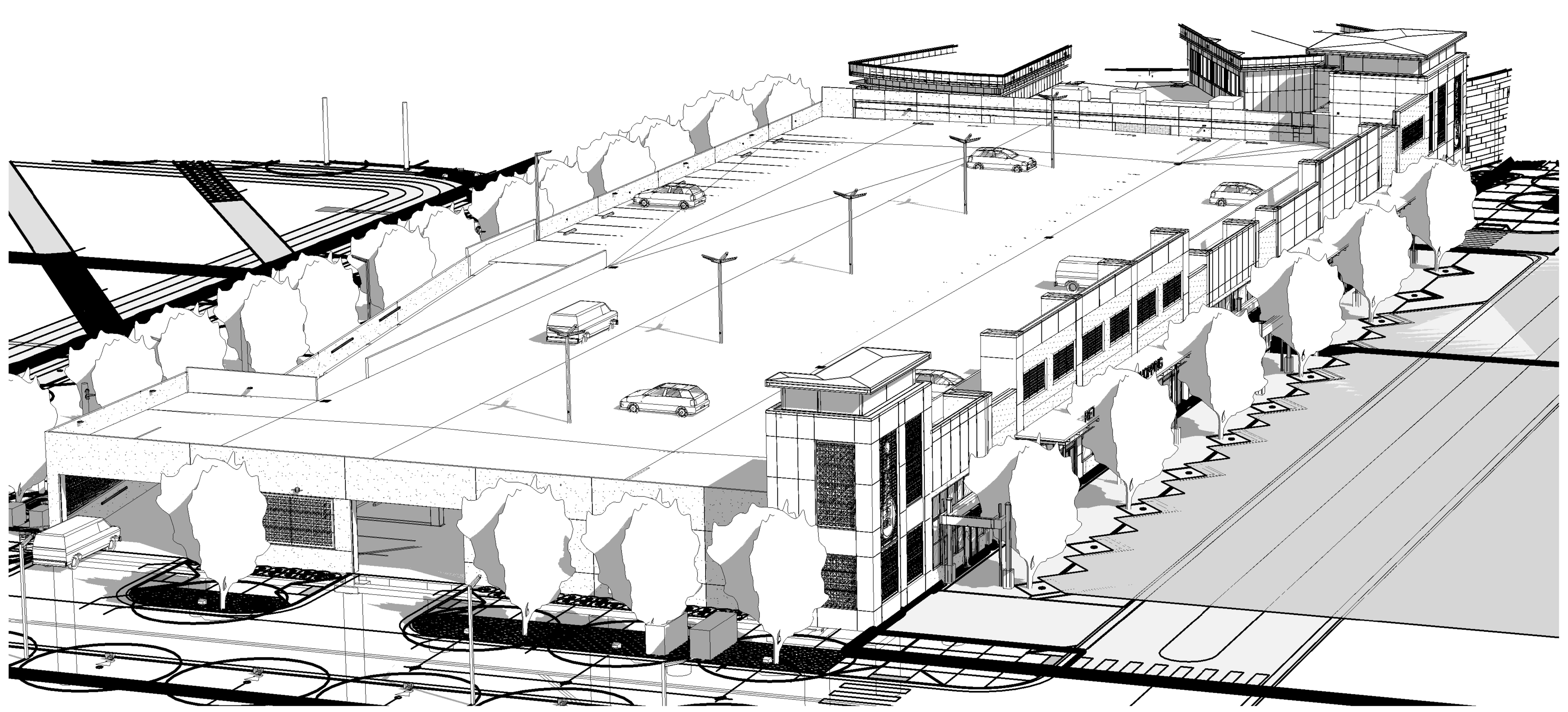

4 SOUTHWEST BIRD'S EYE VIEW

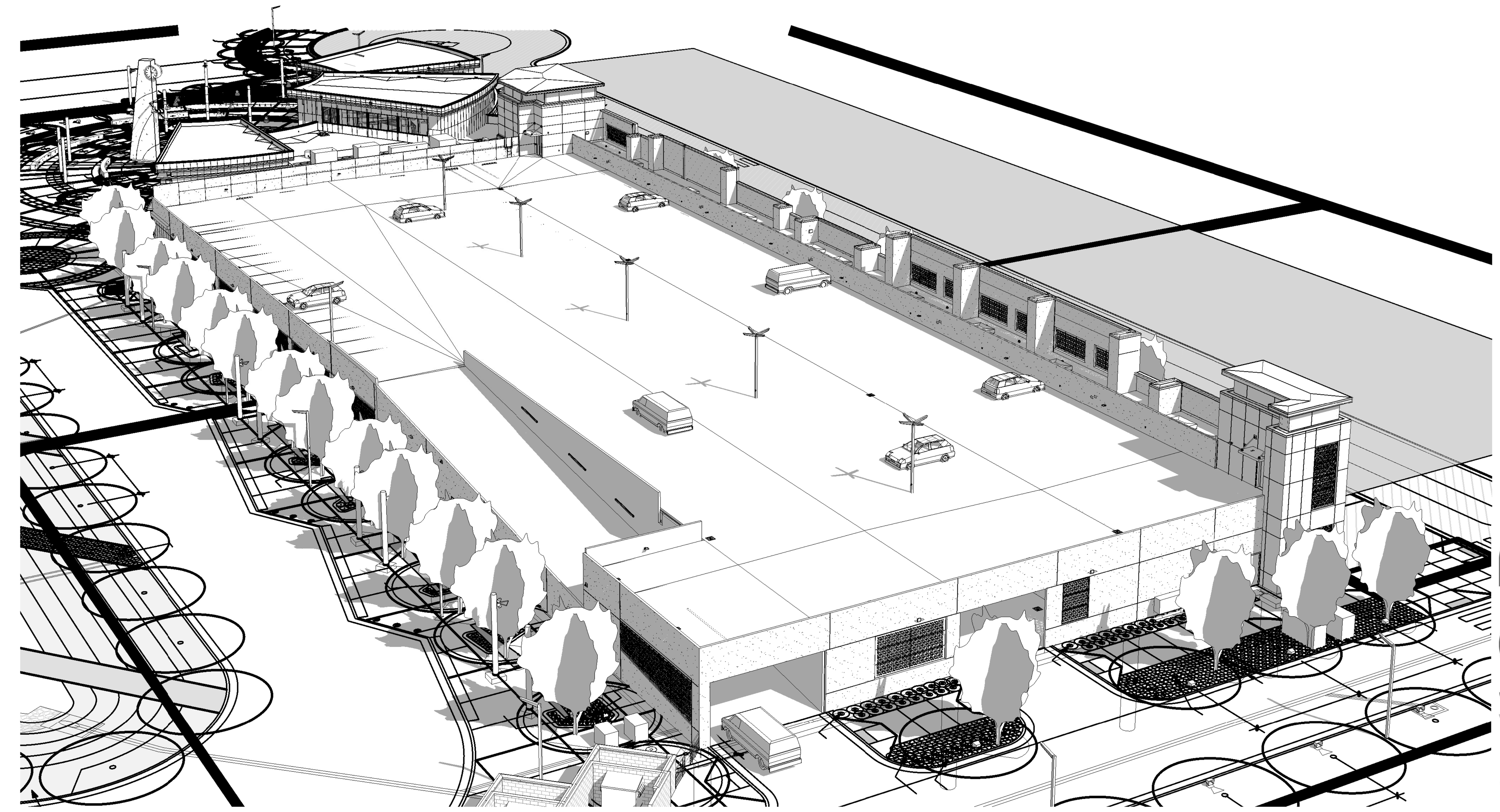

5 NORTHWEST BIRD'S EYE VIEW

ARCHITECTURE INSPIRED BY PURPOSE

100% CONSTRUCTION DOCUMENTS

REFERENCES -- BENCHMARKS

ARCHITECTS SEAL

03/03/2016

SCALE
HOR: SHOWN
VER: SHOWN

PROJECT NAME

NORTHGATE TRANSFER CENTER

EL PASO, TEXAS.

CITY OF EL PASO

CAPITAL IMPROVEMENT DEPARTMENT

SHEET TITLE

PERSPECTIVE VIEWS

SHEET

AG503

KEYED NOTES

K1 DOOR AS SCHEDULED

K2 COLUMN FOOTING - SEE STRUCTURAL

K3 METAL STAIRS

K4 ALUMINUM SHADING SCREEN

K5 CONCRETE WALL

K6 LIGHT POST - SEE ELECTRICAL

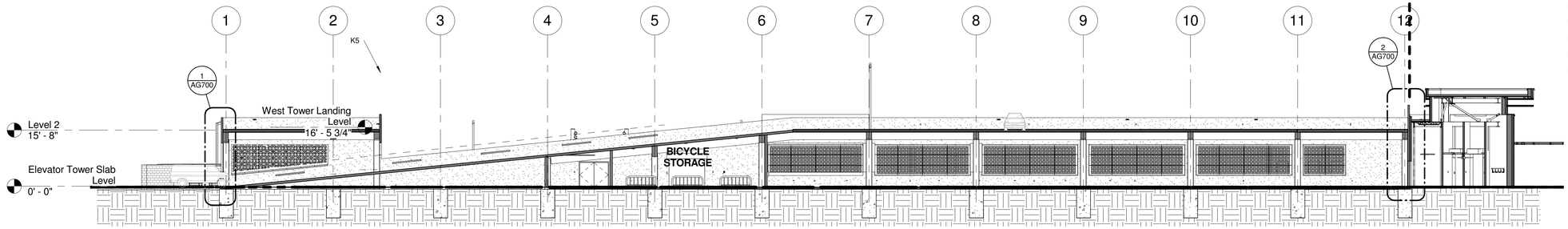

1 LONGITUDINAL SECTION A
1/16" = 1'-0"

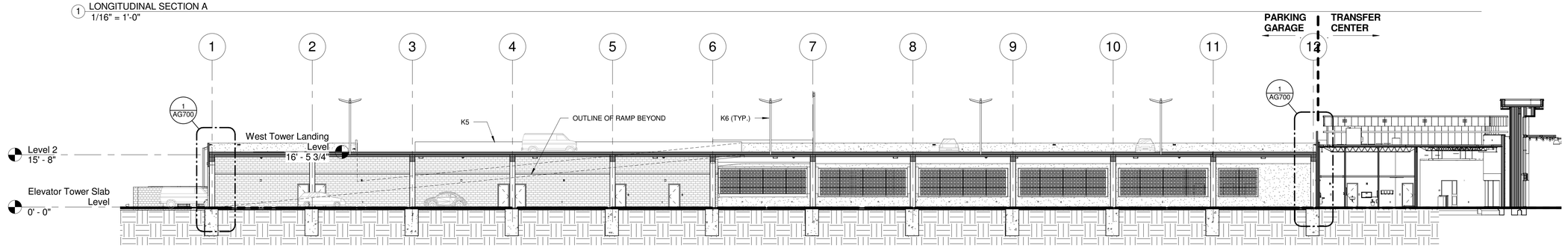

2 LONGITUDINAL SECTION B
1/16" = 1'-0"

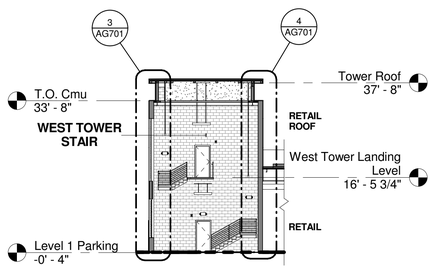

3 WEST TOWER BUILDING SECTION
1/16" = 1'-0"

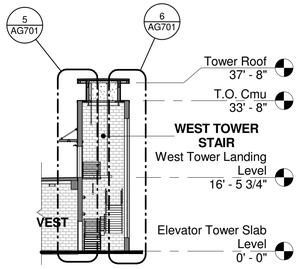

4 WEST TOWER BLDG. SECTION
1/16" = 1'-0"

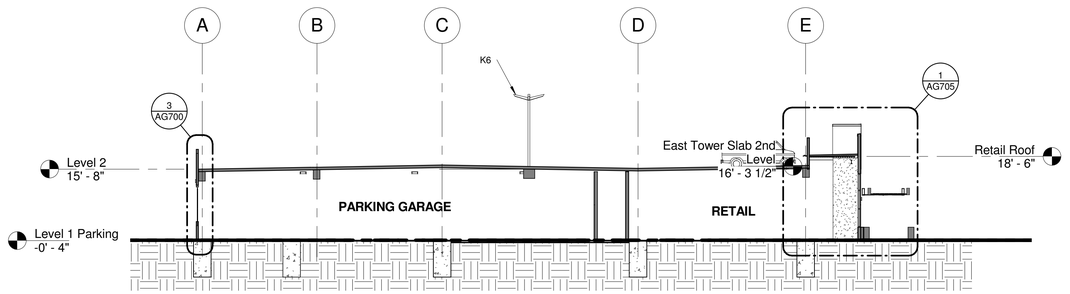

5 TRANSVERSE BUILDING SECTION B
1/16" = 1'-0"

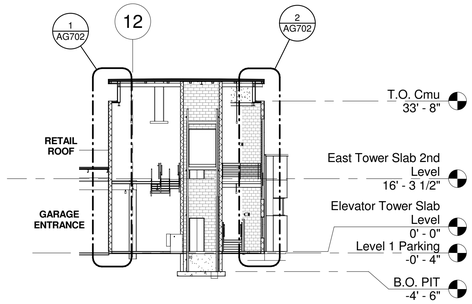

6 EAST TOWER BUILDING SECTION
1/16" = 1'-0"

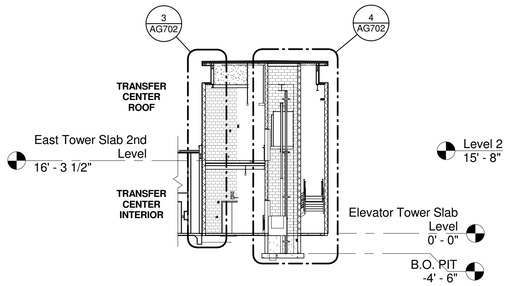

7 EAST TOWER BLDG. SECTION
1/16" = 1'-0"

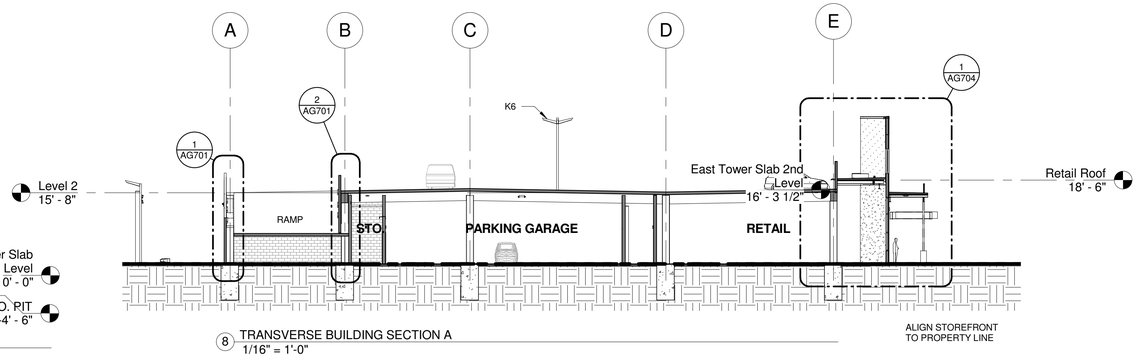

8 TRANSVERSE BUILDING SECTION A
1/16" = 1'-0"

100% CONSTRUCTION DOCUMENTS

REFERENCES – BENCHMARKS

No.	DATE	REVISIONS	BY

ARCHITECT'S SEAL

REGISTERED ARCHITECT ERIC GUTIERREZ 12937 STATE OF TEXAS

03/03/2016

SCALE
HOR: SHOWN
VER: SHOWN

DATE 03/03/2016
DESIGN BY EUGENIO MEDINA
DRAWN BY JOSE CORTESA
CHKD BY JESUS ORTEGA
APPD BY Approver

PROJECT NAME
NORTHGATE TRANSFER CENTER
EL PASO, TEXAS.

CITY OF EL PASO
CAPITAL IMPROVEMENT DEPARTMENT

THE CITY OF EL PASO TEXAS

exigo
ARCHITECTURE INSPIRED BY PURPOSE

SHEET TITLE
BUILDING SECTIONS

SHEET
AG600

GENERAL NOTES

1. COORDINATE LOCATION OF LIGHT FIXTURES AND ROOF DRAIN SCUPPERS TO AVOID CONFLICT - SEE ELECTRICAL.

2. COORDINATE THE INSTALLATION OF J-BOXES, POWER CONDUIT, ETC., WITH THE CONSTRUCTION OF MASONRY - SEE ELECTRICAL.

3. RETAIL ROOF SLOPE SHALL BE ACCOMPLISHED BY ADDING LAYERS OF RIGID INSULATION. **SLOPE 1/4" / FT.**

4. LIGHT FIXTURES ON RETAIL ROOF TO BE MOUNTED ON APPROPRIATE BASE TO ENSURE LEAK-PROOF INSTALLATION. SEE ELECTRICAL.

NOTES:

1. PARKING GARAGE SLAB IS LOWER THAN TRANSFER CENTER SLAB LEVEL.

2. IN SHARED WALL DOOR OPENINGS, THRESHOLD LEVEL, HEAD LEVEL & JAMBS LOCATIONS SHALL MATCH TRANSFER CENTER LOCATIONS.

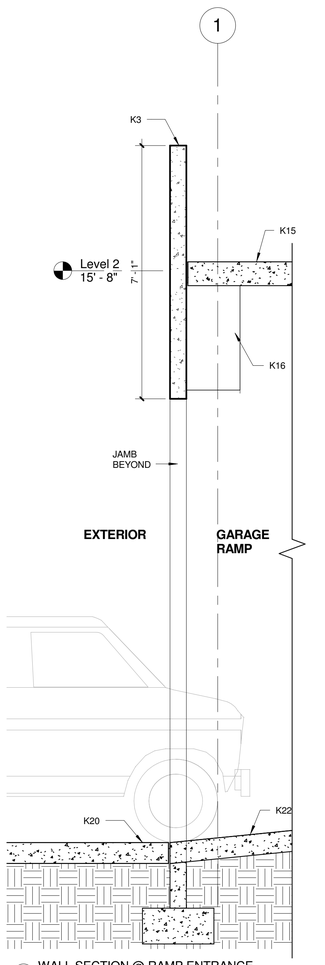

1 WALL SECTION @ RAMP ENTRANCE
1/2" = 1'-0"

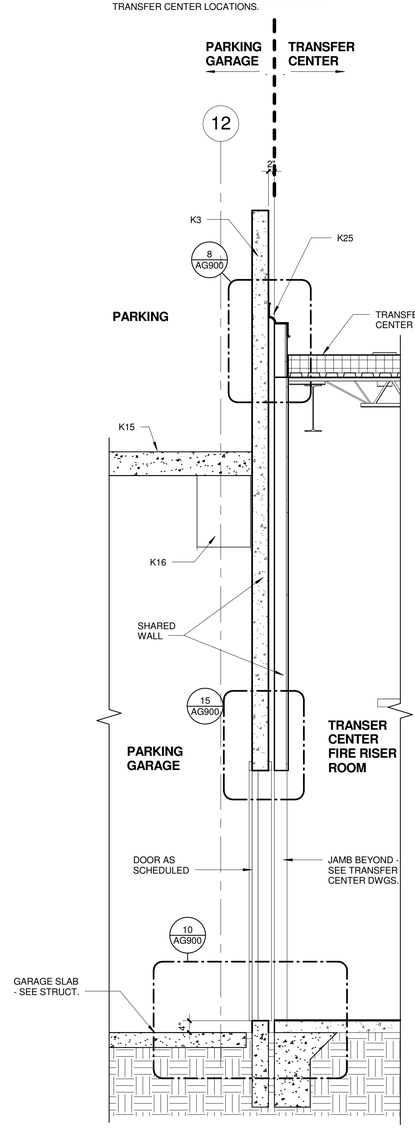

2 SHARED WALL SECTION @ FIRE RISER ROOM
1/2" = 1'-0"

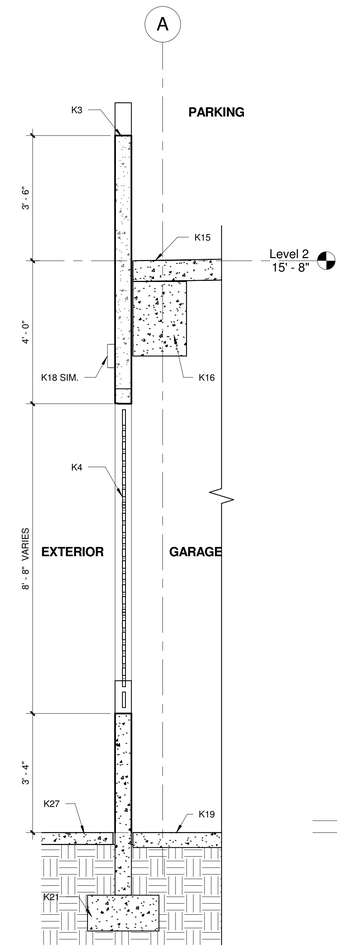

3 WALL SECTION @ NORTH PERIMETER
1/2" = 1'-0"

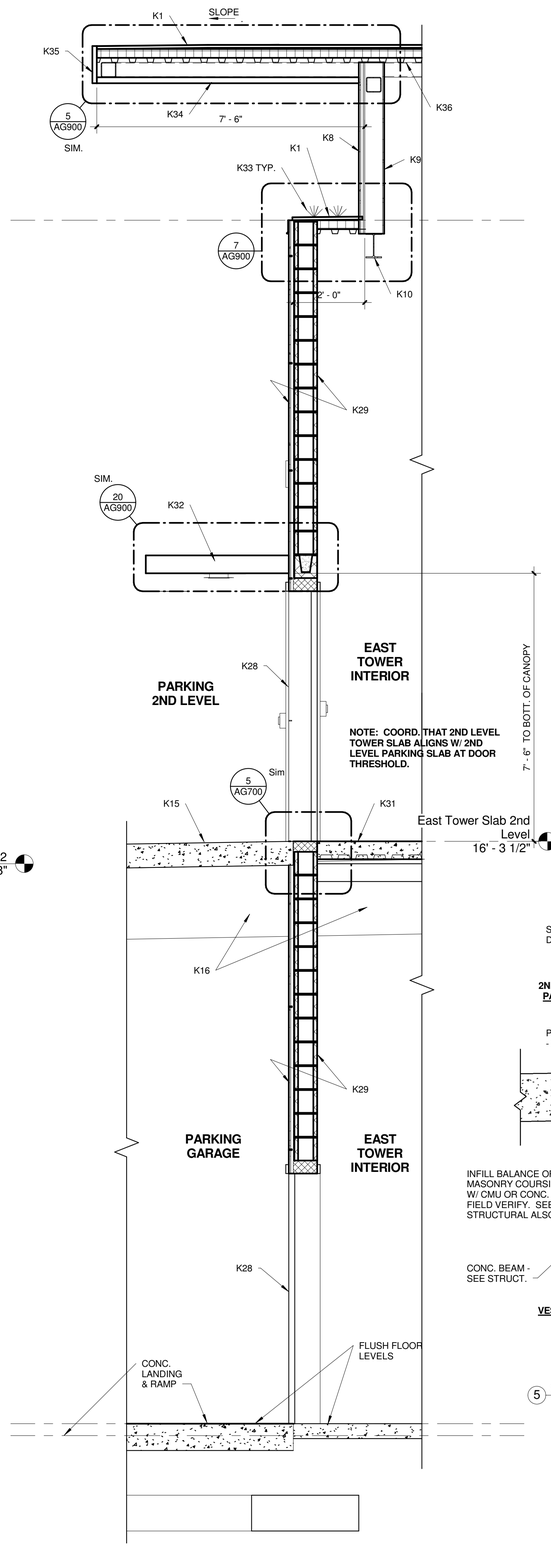

4 SECTION THRU EAST TOWER 2ND LEVEL DOOR
1/2" = 1'-0"

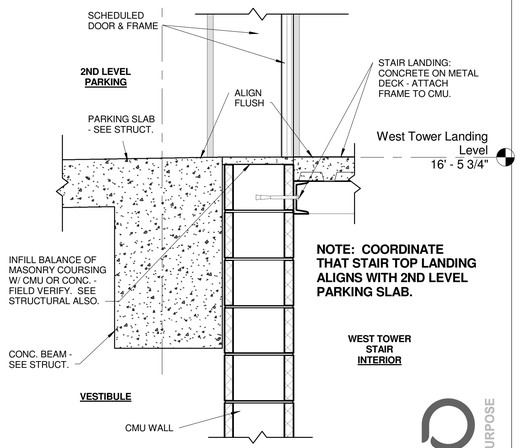

5 STAIR LANDING @ WEST TOWER DOOR THRESHOLD
1" = 1'-0"

KEYED NOTES

K1 T.P.O ROOF ON PLYWOOD SHEATHING ON RIGID INSULATION ON METAL DECK

K2 ALUMINUM STOREFRONT

K3 CONCRETE WALL - SEE STRUCTUAL

K4 ALUMINUM SHADING SCREEN

K5 CONTINUOUS METAL COPING

K6 EQUIPMENT CURB - SEE MECHANICAL

K7 ROOF DRAIN - SEE PLUMBING

K8 FIBER CEMENT BOARD ON STUDS

K9 STUCCO ON STUDS

K10 ROOF JOISTS (PAINT EXPOSED)- SEE STRUCTURAL

K11 SHADESCREEN STRUCTURE (PAINT) - SEE STRUCTURAL

K12 SIGNAGE - SEE ELEVATIONS

K13 GYP. BOARD ON STUDS

K14 CONCRETE PEDESTAL FOR CANOPY SUPPORT PIPE - SEE STRUCTUAL

K15 CONC. PARKING LEVEL SLAB - SEE STRUCTURAL

K16 CONC. BEAM - SEE STRUCTURAL

K17 CONC. COLUMN - SEE STRUCTURAL

K18 LIGHT FIXTURE - SEE ELECTRICAL

K19 PARKING GARAGE SLAB - SEE STRUCTURAL. FINISH AS SCHEDULED

K20 CONC. DRIVEWAY - SEE CIVIL

K21 CONC. FOOTING - SEE STRUCTURAL

K22 CONC. VEHICLE RAMP - SEE STRUCTURAL

K23 METAL WALL BRACKET FOR SHADE CANOPY - SEE STRUCTURAL & LANDSCAPE

K24 ROOF CRICKET - SEE ROOF PLAN

K25 EXPANSION JOINT COVER

K26 WORK BY OTHERS - SEE CIVIL AND LANDSCAPE SHEETS

K27 SIDEWALK - SEE CIVIL & LANDSCAPE SHEETS

K28 DOOR AS SCHEDULED

K29 CMU - FINISH AS SCHEDULED

K30 CONC. FLOOR FLOW

K31 CONC. SLAB ON METAL DECK - SEE STRUCTURAL

K32 METAL CANOPY W/ SUPPORT RODS

K33 BIRD CONTROL DEVICE AS SPECIFIED

K34 METAL PANEL SOFFIT

K35 METAL FASCIA

K36 EXPOSED METAL DECK - PAINT

100% CONSTRUCTION DOCUMENTS

REFERENCES – BENCHMARKS

No.	DATE	REVISIONS	BY

ARCHITECTS SEAL

REGISTERED ARCHITECT JESUS CORTESA 12937 STATE OF TEXAS

03/03/2016

SCALE
HOR: SHOWN
VER: SHOWN

DATE: 03/03/2015
DES.CON BY: EDGEMU MEDIA
DRAWN BY: JESUS CORTESA
CHKD BY: JESUS CORTESA
APPD BY: Approver

PROJECT NAME
NORTHGATE TRANSFER CENTER

EL PASO, TEXAS.

CITY OF EL PASO
CAPITAL IMPROVEMENT DEPARTMENT

THE CITY OF EL PASO TEXAS

exigo
ARCHITECTURE INSPIRED BY PURPOSE

SHEET TITLE

WALL SECTIONS THRU GARAGE

SHEET
AG700

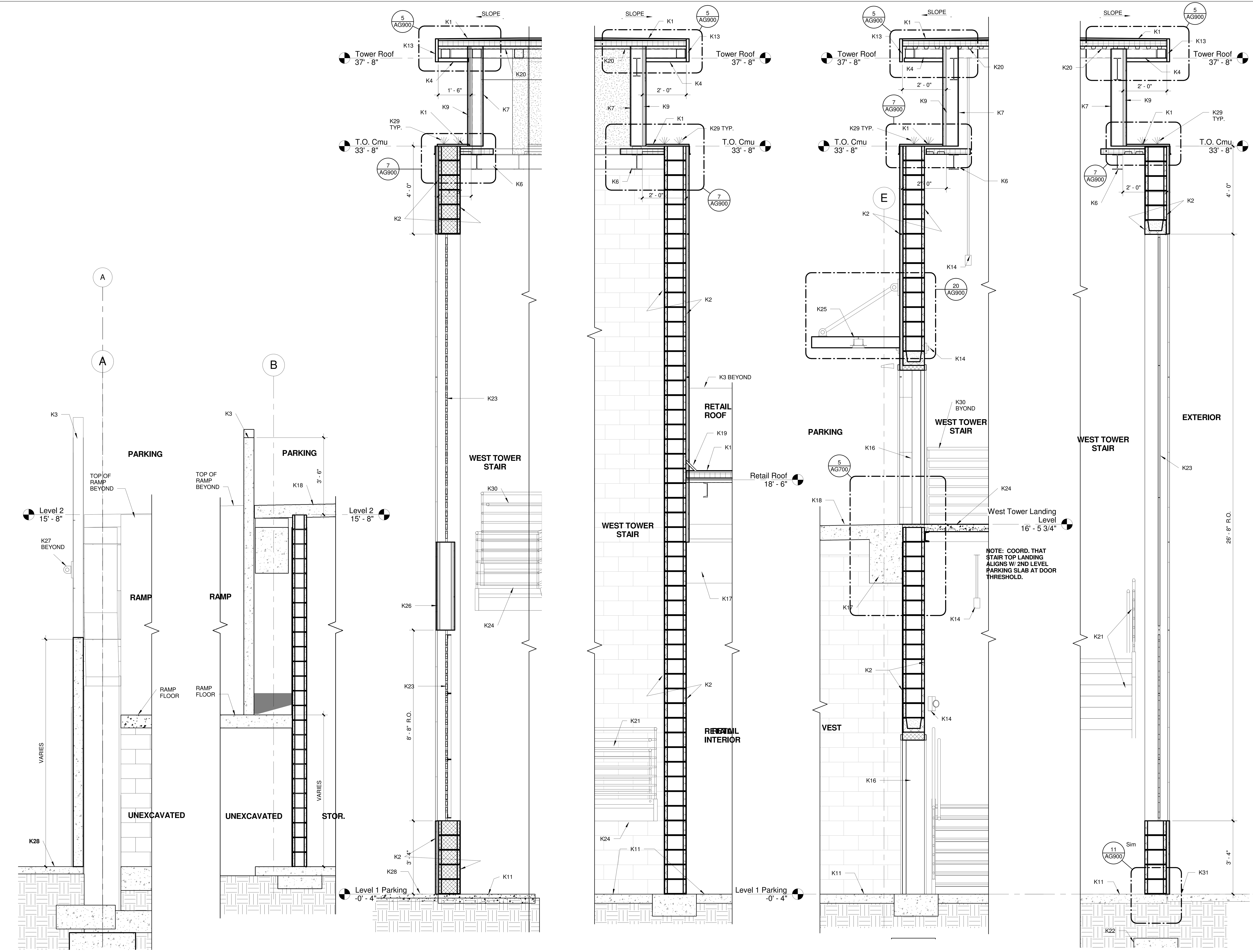

1 WALL SECTION @ RAMP EXTERIOR WALL
1/2" = 1'-0"

2 WALL SECTION @ RAMP INTERIOR WALL
1/2" = 1'-0"

3 WEST TOWER WALL SECTION A
1/2" = 1'-0"

4 WEST TOWER WALL SECTION B
1/2" = 1'-0"

5 WEST TOWER WALL SECTION C
1/2" = 1'-0"

6 WEST TOWER WALL SECTION D
1/2" = 1'-0"

100% CONSTRUCTION DOCUMENTS

GENERAL NOTES

1. SEE TRANSFER CENTER DRAWINGS FOR CONTINUATION OF TRANSFER CENTER SIDE.
2. INTERIOR SIDE CMU TO HAVE EPOXY PAINT, 2 COATS

KEYED NOTES

K1 T.P.O. ROOF ON PLYWOOD DECK ON RIGID INSULATION ON METAL DECK

K2 CMU - FINISH AS SCHEDULED

K3 CONCRETE WALL - SEE STRUCTUAL

K4 METAL PANEL SOFFIT

K5 CONTINUOUS METAL FLASHING

K6 ROOF JOISTS (PAINT EXPOSED) - SEE STRUCTURAL

K7 GYP. BOARD ON STUDS

K8 CONC. FLOOR ON METAL DECK - SEE STRUCT. FINISH AS SCHEDULED

K9 FIBER CEMENT BOARD ON STUDS

K10 FLOOR JOISTS (PAINT EXPOSED) - SEE STRUCTURAL

K11 CONC. SLAB ON GRADE - SEE STRUCTURAL (FINISH AS SCHEDULED)

K12 PAVING ON GRADE - SEE STRUCTURAL

K13 METAL FASCIA

K14 LIGHT FIXTURE - SEE ELECTRICAL

K15 CONT. EXPANSION JOINT FLASHING

K16 DOOR AS SCHEDULED

K17 CONC. BEAM - SEE STRUCTURAL

K18 CONC. PARKING LEVEL SLAB - SEE STRUCTURAL

K19 CANT STRIP

K20 EXPOSED METAL DECK - PAINT

K21 PREFAB METAL STAIRS (PAINT)

K22 CONCRETE FOOTING - SEE STRUCTURAL

K23 ALUMINUM SHADING SCREEN

K24 STAIR LANDING - CONC. OVER METAL DECK.

K25 METAL CANOPY & SUPPORT RODS

K26 FIBER CEMENT FINISH ON STUDS

K27 WALL BRACKET FOR SHADE CANOPIES - SEE STRUCTRUAL

K28 SIDEWALK - SEE CIVIL & LANDSCAPE SHEETS

K29 BIRD CONTROL DEVICE AS SPECIFED

K30 STEEL TUBE GUARDRAIL (PAINT)

K31 WORK BY OTHERS - SEE CIVIL & LANDSCAPE SHEETS

REFERENCES -- BENCHMARKS

ARCHITECTS SEAL

03/03/2016

SCALE
HOR: SHOWN
VER: SHOWN

PROJECT NAME

NORTHGATE TRANSFER CENTER

EL PASO, TEXAS.

CITY OF EL PASO

CAPITAL IMPROVEMENT DEPARTMENT

SHEET TITLE

WALL SECTIONS @ WEST TOWER

SHEET

AG701

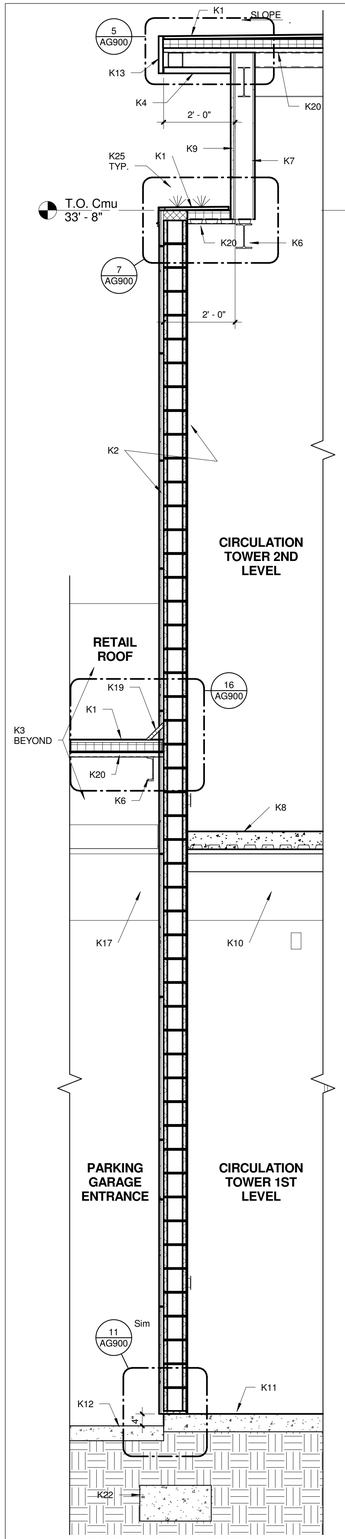

1 EAST TOWER WALL SECTION A
1/2" = 1'-0"

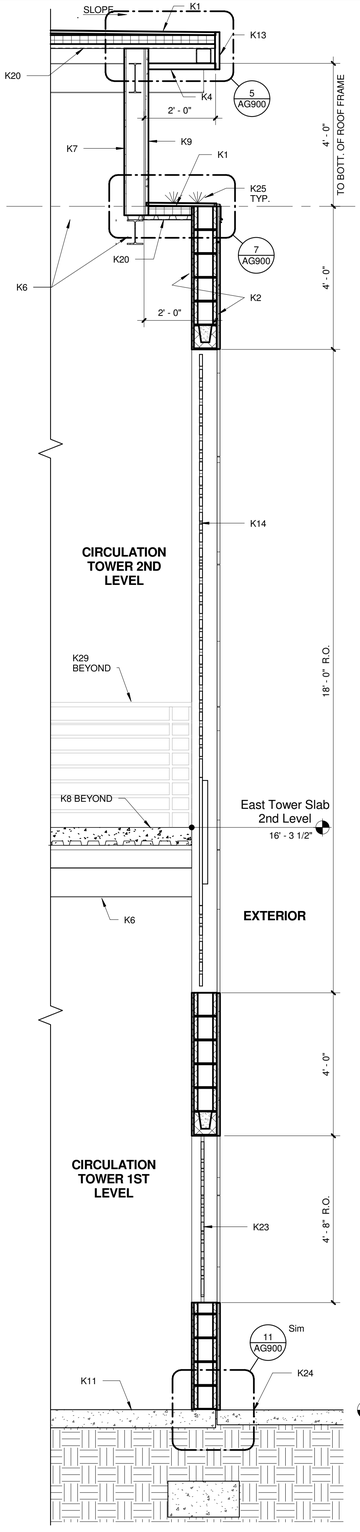

2 EAST TOWER WALL SECT. A
1/2" = 1'-0"

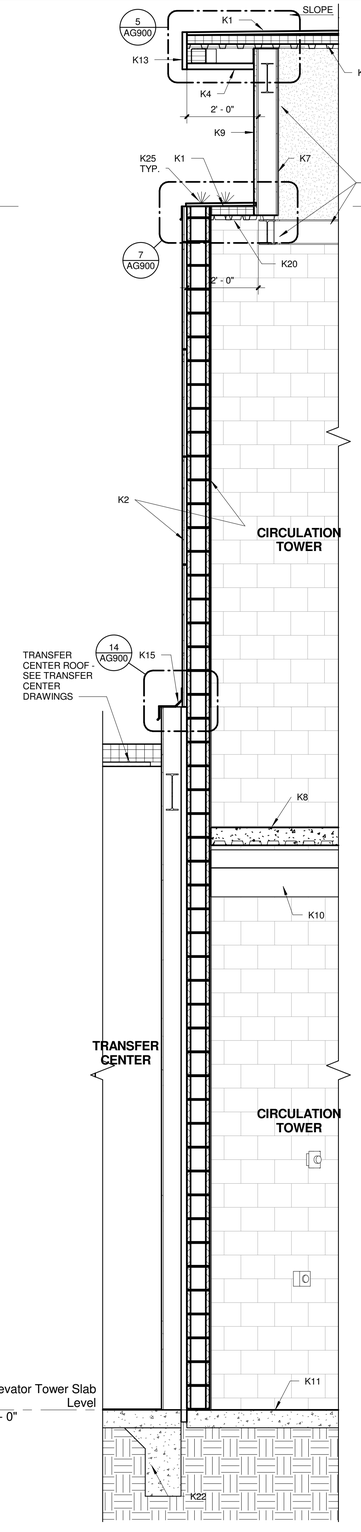

3 EAST TOWER WALL SECTION B
1/2" = 1'-0"

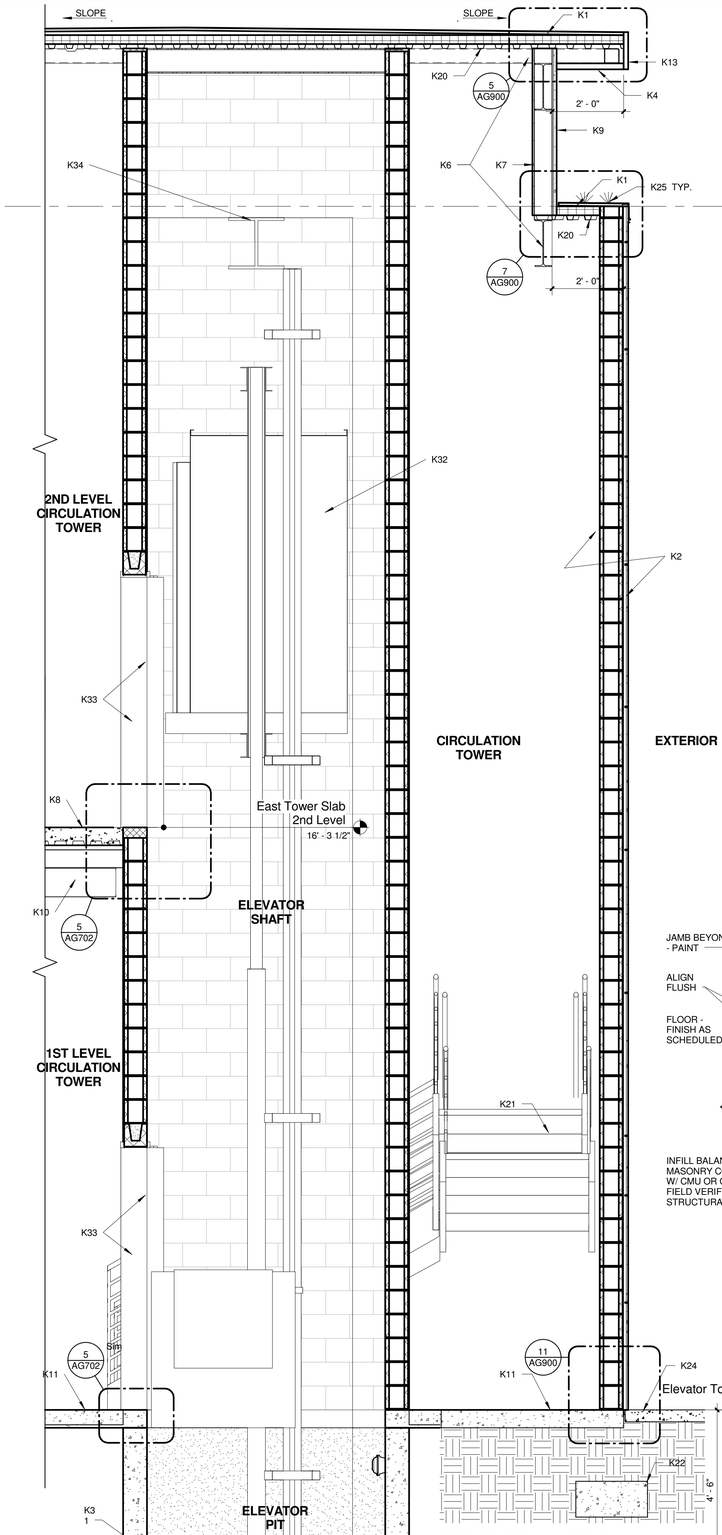

4 EAST TOWER WALL SECT. B
1/2" = 1'-0"

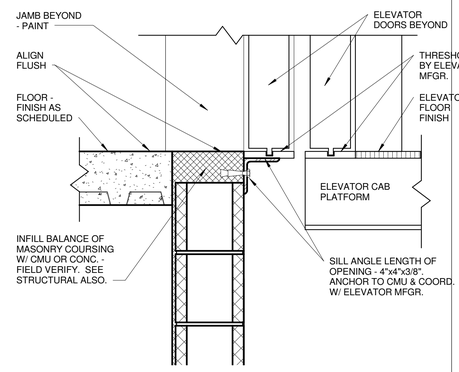

5 ELEVATOR THRESHOLD DETAIL
1 1/2" = 1'-0"

GENERAL NOTES

1. SEE TRANSFER CENTER DRAWINGS FOR CONTINUATION OF TRANSFER CENTER SIDE.
2. INTERIOR SIDE CMU TO HAVE EPOXY PAINT, 2 COATS

KEYED NOTES

K1 T.P.O ROOF ON PLYWOOD SHEATHING ON RIGID INSULATION ON METAL DECK

K2 CMU - FINISH AS SCHEDULED

K3 CONCRETE WALL - SEE STRUCTUAL

K4 METAL PANEL SOFFIT

K5 CONTINUOUS METAL FLASHING

K6 ROOF JOISTS (PAINT EXPOSED) - SEE STRUCTURAL

K7 GYP. BOARD ON STUDS

K8 CONC. SLAB ON METAL DECK - SEE STRUCT. FINISH AS SCHEDULED

K9 FIBER CEMENT BOARD ON STUDS

K10 FLOOR FRAMING (PAINT EXPOSED) - SEE STRUCTURAL

K11 CONC. SLAB ON GRADE - SEE STRUCTURAL (FINISH AS SCHEDULED)

K12 PAVING ON GRADE - SEE STRUCTURAL

K13 METAL FASCIA

K14 BACK-LIT PANEL WITH LOGO

K15 EXPANSION JOINT COVER

K16 DOOR AS SCHEDULED

K17 CONC. BEAM - SEE STRUCTURAL

K18 CONC. PARKING LEVEL SLAB - SEE STRUCTURAL

K19 CANT STRIP

K20 EXPOSED METAL DECK - PAINT

K21 PREFAB METAL STAIRS (PAINT)

K22 CONCRETE FOOTING - SEE STRUCTURAL

K23 ALUMINUM SHADING SCREEN

K24 SIDEWALK - SEE CIVIL & LANDSCAPE SHEETS

K25 BIRD CONTROL DEVICE AS SPECIFIED

K26 LIGHT FIXTURE - SEE ELECTRICAL

K29 STEEL TUBE GUARDRAIL - PAINT

K30 ELEVATOR AS SPEFIFIED

K31 SUMP PIT - SEE STRUCTURAL & PLUMBING. ADJUST PIT SIZE TO MEET PUMP CLEARANCE REQUIREMENTS.

K32 ELEVATOR AS SPECIFIED

K33 ELEVATOR DOOR & JAMB - PAINT

K34 STEEL BEAM - SEE STRUCTURAL AND COORDINATE WITH ELEVATOR MFGR.

100% CONSTRUCTION DOCUMENTS

REFERENCES – BENCHMARKS

No.	DATE	REVISIONS	BY

ARCHITECT'S SEAL

REGISTERED ARCHITECT
RICARDO MEDINA
12937
STATE OF TEXAS

03/03/2016

SCALE
HOR: 3/4"=1'-0"
VER: 3/4"=1'-0"

DATE: 03/03/16
DESIGN BY: Designer
DRAWN BY: Author
CHKD BY: Checker
APPD BY: Approver

PROJECT NAME

NORTHGATE TRANSFER CENTER

EL PASO, TEXAS.

CITY OF EL PASO
CAPITAL IMPROVEMENT DEPARTMENT

exigo
ARCHITECTURE INSPIRED BY PURPOSE

SHEET TITLE

WALL SECTIONS @ EAST TOWER

SHEET

AG702

GENERAL NOTES

1. COORDINATE LOCATION OF LIGHT FIXTURES AND ROOF DRAIN SCUPPERS TO AVOID CONFLICT - SEE ELECTRICAL.
2. COORDINATE THE INSTALLATION OF J-BOXES, POWER CONDUIT, ETC., WITH THE CONSTRUCTION OF MASONRY - SEE ELECTRICAL.
3. RETAIL ROOF SLOPE SHALL BE ACCOMPLISHED BY ADDING LAYERS OF RIGID INSULATION. **SLOPE 1/4" / FT.**
4. LIGHT FIXTURES ON RETAIL ROOF TO BE MOUNTED ON APPROPRIATE BASE TO ENSURE LEAK-PROOF INSTALLATION. SEE ELECTRICAL.

KEYED NOTES

K1 T.P.O ROOF ON PLYWOOD SHEATHING ON RIGID INSULATION ON METAL DECK

K2 ALUMINUM STOREFRONT

K3 CONCRETE WALL - SEE STRUCTUAL

K4 SHADING SCREEN

K5 CONTINUOUS METAL COPING

K6 ROOF CURB FOR FUTURE EQUIPMENT - COORDINATE W/ MECH. & STRUCT. COVER OPENING WITH SHEET METAL CAP SECURED IN PLACE W/ SCREWS.

K7 COVERED CANOPY - SEE STRUCTURAL FOR FRAMING (PAINT EXPOSED)

K8 FIBER CEMENT FINISH ON STUDS

K9 STUCCO ON STUDS

K10 ROOF JOISTS ON BEAM - SEE STRUCTURAL

K11 SHADESCREEN STRUCTURE (PAINT) - SEE STRUCTURAL

K12 SIGNAGE - SEE ELEVATIONS

K13 GYP. BOARD ON STUDS

K14 CONCRETE BOLLARD AROUND CANOPY SUPPORT PIPE - SEE STRUCTUAL

K15 2ND LEVEL CONC. PARKING SLAB - SEE STRUCTURAL

K16 CONC. BEAM - SEE STRUCTURAL

K17 CONC. COLUMN - SEE STRUCTURAL

K18 LIGHT FIXTURE - SEE ELECTRICAL

K19 CONC. SLAB ON GRADE - SEE STRUCTURAL. FINISH AS SCHEDULED

K20 WORK BY OTHERS - SEE CIVIL AND LANDSCAPE SHEETS

K21 CONC. FOOTING - SEE STRUCTURAL

K22 CONC. PIER - SEE STRUCTURAL

K23 EDGE OF SLAB - SEE STRUCTURAL

K24 ROOF CRICKET - SEE ROOF PLAN

K25 ROOF DRAIN SCUPPER AND OVERFLOW WHERE OCCURS - SEE ROOF PLAN.

K26 DOOR AS SCHEDULED

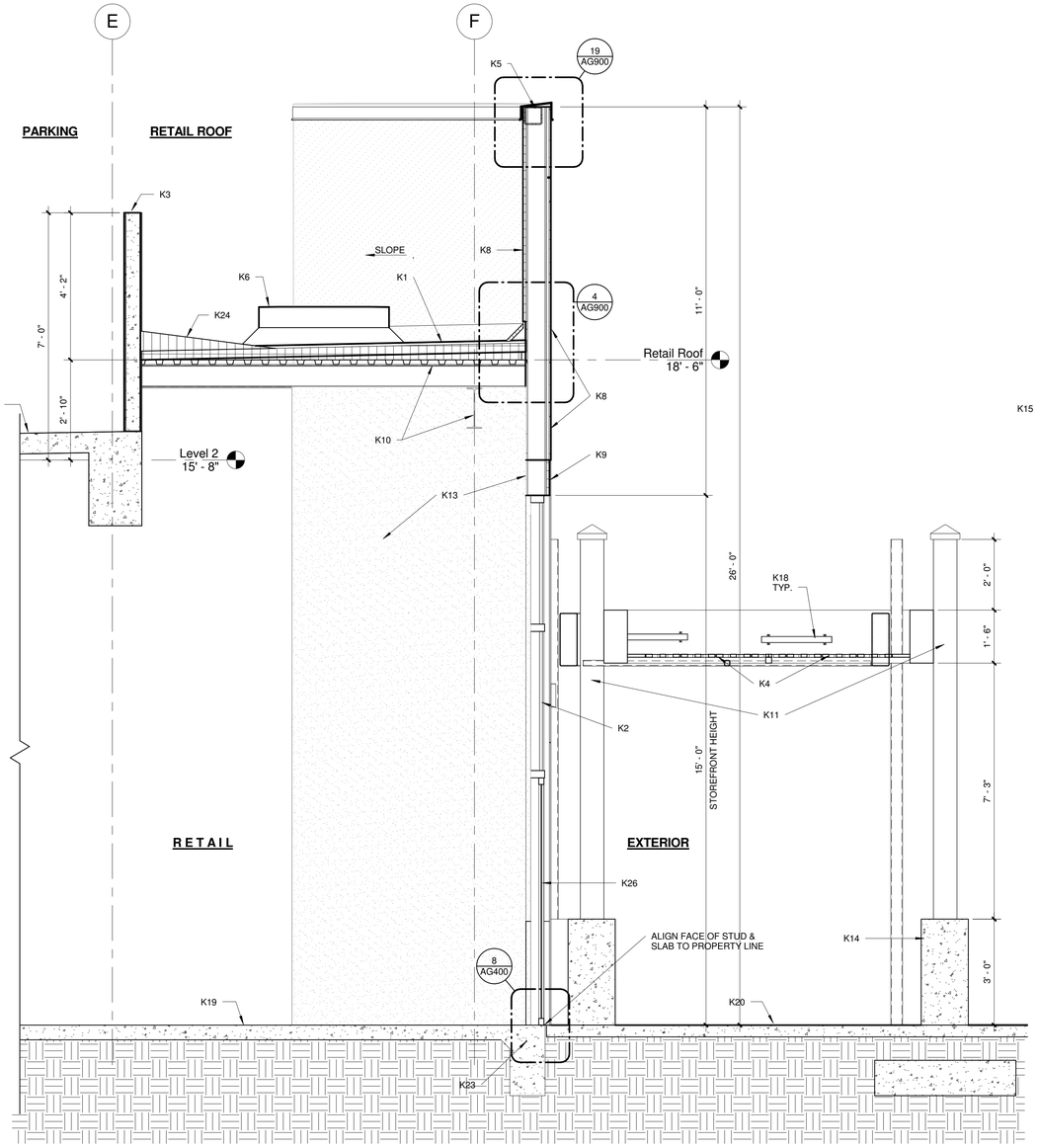

1 RETAIL WALL SECTON THRU SHADE SCREEN CANOPY
1/2" = 1'-0"

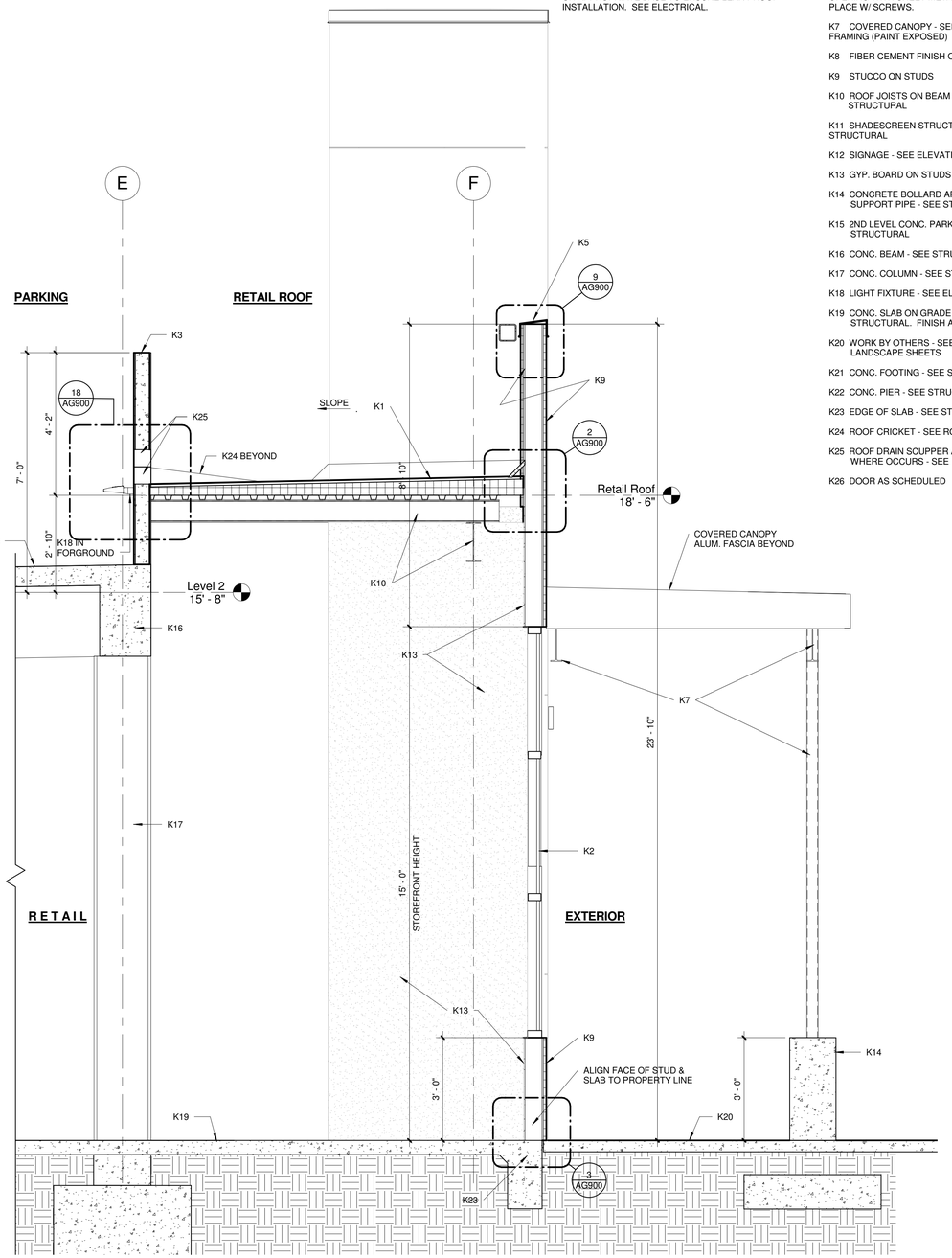

2 RETAIL WALL SECTION & COVERED CANOPY BEYOND
1/2" = 1'-0"

100% CONSTRUCTION DOCUMENTS

exigo
ARCHITECTURE INSPIRED BY PURPOSE

REFERENCES – BENCHMARKS

No.	DATE	REVISIONS	BY

ARCHITECT'S SEAL
REGISTERED ARCHITECT PROVINCIO MARTINEZ 12937 STATE OF TEXAS
03/03/2016

SCALE
HOR: SHOWN
VER: SHOWN

DATE 03/03/2016
DESIGN BY Designer
DRAWN BY Author
CHKD BY Checker
APPD BY Approver

PROJECT NAME
NORTHGATE TRANSFER CENTER
EL PASO, TEXAS.

CITY OF EL PASO
CAPITAL IMPROVEMENT DEPARTMENT

SHEET TITLE
WALL SECTIONS @ RETAIL

SHEET
AG703

GENERAL NOTES

1. COORDINATE LOCATION OF LIGHT FIXTURES AND ROOF DRAIN SCUPPERS TO AVOID CONFLICT - SEE ELECTRICAL.
2. COORDINATE THE INSTALLATION OF J-BOXES, POWER CONDUIT, ETC., WITH THE CONSTRUCTION OF MASONRY - SEE ELECTRICAL.
3. RETAIL ROOF SLOPE SHALL BE ACCOMPLISHED BY ADDING LAYERS OF RIGID INSULATION. **SLOPE 1/4"** / **FT.**
4. LIGHT FIXTURES ON RETAIL ROOF TO BE MOUNTED ON APPROPRIATE BASE TO ENSURE LEAK-PROOF INSTALLATION. SEE ELECTRICAL.

KEYED NOTES

K1 T.P.O ROOF ON PLYWOOD SHEATHING ON RIGID INSULATION ON METAL DECK

K2 ALUMINUM STOREFRONT

K3 CONCRETE WALL - SEE STRUCTUAL

K4 ALUMINUM SHADING SCREEN

K5 CONTINUOUS METAL COPING

K6 ROOF CURB FOR FUTURE EQUIPMENT - COORDINATE W/ MECH. & STRUCT. COVER OPENING WITH SHEET METAL CAP SECURED IN PLACE W/ SCREWS.

K7 COVERED CANOPY - SEE STRUCTURAL FOR FRAMING (PAINT EXPOSED)

K8 FIBER CEMENT FINISH ON STUDS

K9 STUCCO ON STUDS

K10 ROOF JOISTS ON BEAM - SEE STRUCTURAL

K11 SHADESCREEN STRUCTURE (PAINT) - SEE STRUCTURAL

K12 SIGNAGE - SEE ELEVATIONS

K13 GYP. BOARD ON STUDS

K14 CONCRETE BOLLARD AROUND CANOPY SUPPORT PIPE - SEE STRUCTUAL

K15 2ND LEVEL CONC.PARKING SLAB - SEE STRUCTURAL

K16 CONC. BEAM - SEE STRUCTURAL

K17 CONC. COLUMN - SEE STRUCTURAL

K18 LIGHT FIXTURE - SEE ELECTRICAL

K19 CONC. SLAB ON GRADE - SEE STRUCTURAL. FINISH AS SCHEDULED

K20 WORK BY OTHERS - SEE CIVIL AND LANDSCAPE SHEETS

K21 EDGE OF SLAB - SEE STRUCTURAL

K22 ROOF DRAIN LEADER INSIDE WALL - SEE PLUMBING

K23 ROOF CRICKET - SEE ROOF PLAN

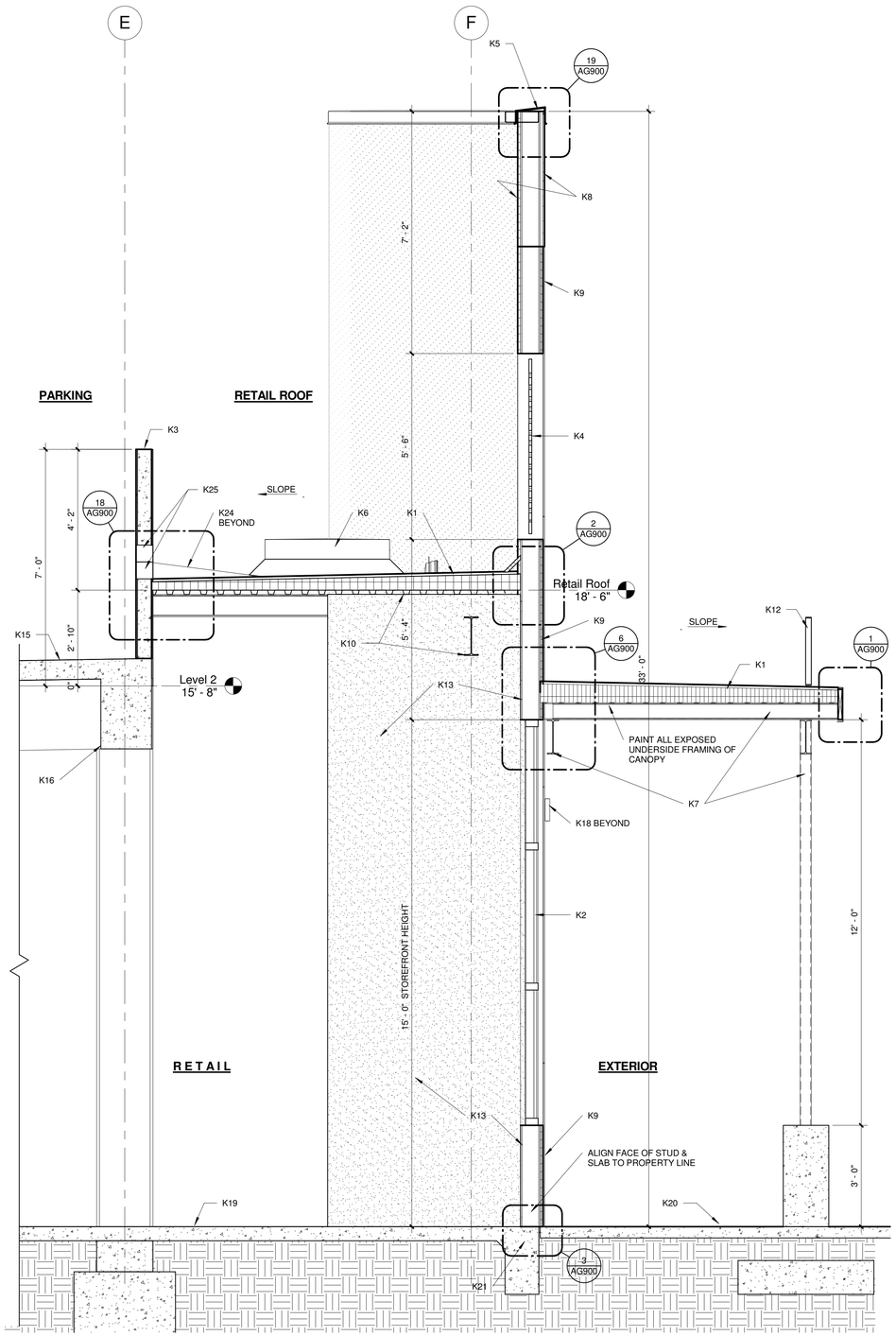

1 RETAIL WALL SECTION THRU COVERED CANOPY
1/2" = 1'-0"

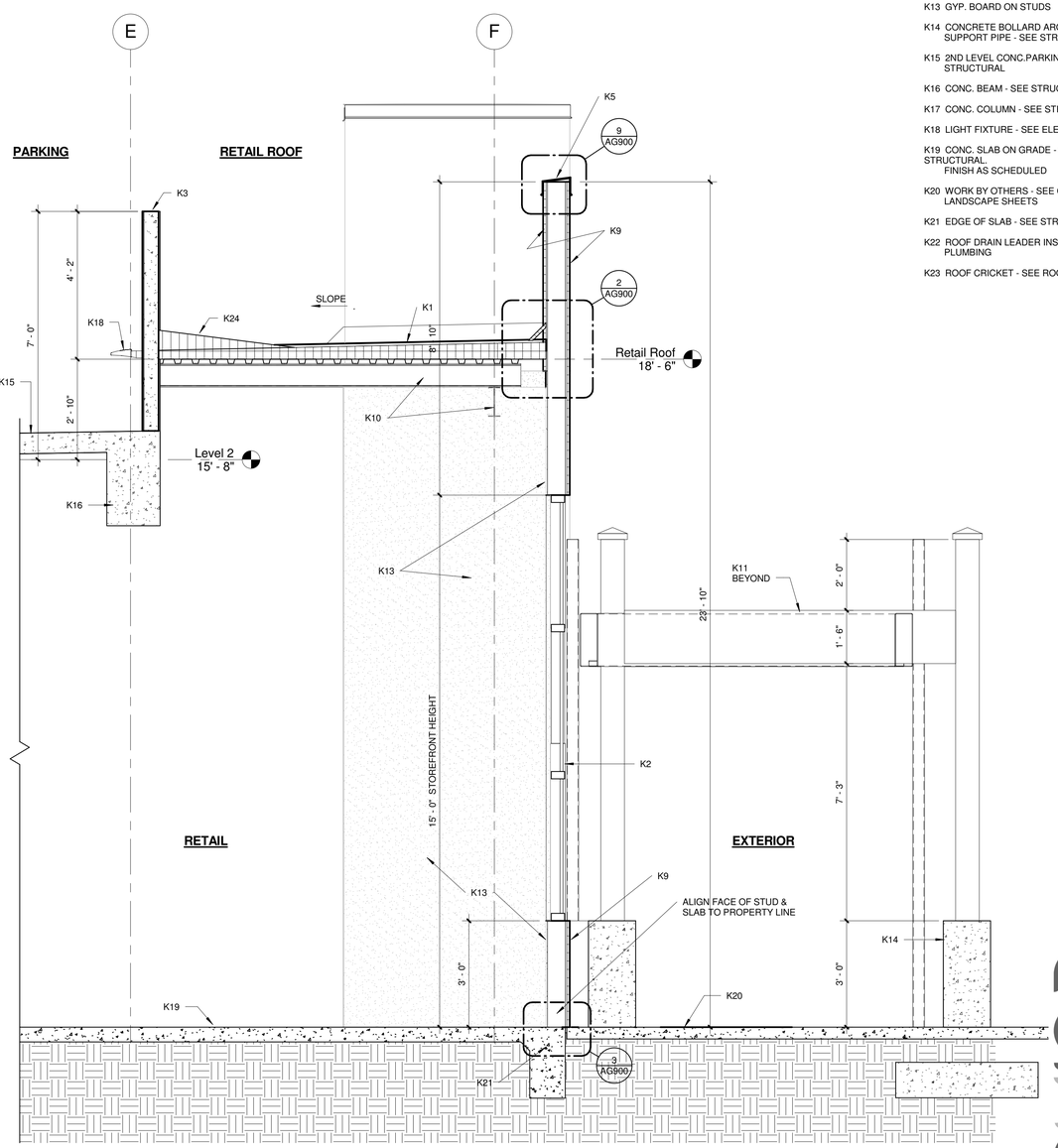

2 RETAIL WALL SECTION W/ SHADESCREEN BEYOND
1/2" = 1'-0"

100% CONSTRUCTION DOCUMENTS

REFERENCES – BENCHMARKS

No.	DATE	REVISIONS	BY

ARCHITECT'S SEAL

REGISTERED ARCHITECT ... STATE OF TEXAS 12937

03/03/2016

SCALE
HOR: SHOWN
VER: SHOWN

DATE 03/03/2016
DESIGN BY Designer
DRAWN BY Author
CHKD BY Checker
APPD BY Approver

PROJECT NAME

NORTHGATE TRANSFER CENTER

EL PASO, TEXAS.

CITY OF EL PASO
CAPITAL IMPROVEMENT DEPARTMENT

THE CITY OF EL PASO TEXAS

exigo
ARCHITECTURE INSPIRED BY PURPOSE

SHEET TITLE

WALL SECTIONS @ RETAIL

SHEET
AG704

GENERAL NOTES

1. COORDINATE LOCATION OF LIGHT FIXTURES AND ROOF DRAIN SCUPPERS TO AVOID CONFLICT - SEE ELECTRICAL.

2. COORDINATE THE INSTALLATION OF J-BOXES, POWER CONDUIT, ETC., WITH THE CONSTRUCTION OF MASONRY - SEE ELECTRICAL.

3. RETAIL ROOF SLOPE SHALL BE ACCOMPLISHED BY ADDING LAYERS OF RIGID INSULATION. **SLOPE 1/4" / FT.**

4. LIGHT FIXTURES ON RETAIL ROOF TO BE MOUNTED ON APPROPRIATE BASE TO ENSURE LEAK-PROOF INSTALLATION. SEE ELECTRICAL.

KEYED NOTES

K1 T.P.O ROOF ON PLYWOOD SHEATHING ON RIGID INSULATION ON METAL DECK

K2 ALUMINUM STOREFRONT

K3 CONCRETE WALL - SEE STRUCTUAL

K4 ALUMINUM SHADING SCREEN

K5 CONTINUOUS METAL COPING

K6 ROOF CURB FOR FUTURE EQUIPMENT - COORDINATE W/ MECH. & STRUCT. COVER OPENING WITH SHEET METAL CAP SECURED IN PLACE W/ SCREWS.

K7 COVERED CANOPY - SEE STRUCTURAL FOR FRAMING (PAINT EXPOSED)

K8 FIBER CEMENT FINISH ON STUDS

K9 STUCCO ON STUDS

K10 ROOF JOISTS ON BEAM - SEE STRUCTURAL

K11 SHADESCREEN STRUCTURE (PAINT) - SEE STRUCTURAL

K12 SIGNAGE - SEE ELEVATIONS

K13 GYP. BOARD ON STUDS

K14 CONCRETE BOLLARD AROUND CANOPY SUPPORT PIPE - SEE STRUCTUAL

K15 CONC. SLAB - SEE STRUCTURAL

K16 CONC. BEAM - SEE STRUCTURAL

K17 CONC. COLUMN - SEE STRUCTURAL

K18 LIGHT FIXTURE - SEE ELECTRICAL

K19 CONC. SLAB ON GRADE - SEE STRUCTURAL, FINISH AS SCHEDULED

K20 WORK BY OTHERS - SEE CIVIL AND LANDSCAPE SHEETS

K21 CONC. SPREAD FOOTING - SEE STRUCTURAL

K22 CONC. PIER - SEE STRUCTURAL

K23 EDGE OF SLAB - SEE STRUCTURAL

K24 ROOF CRICKET - SEE ROOF PLAN

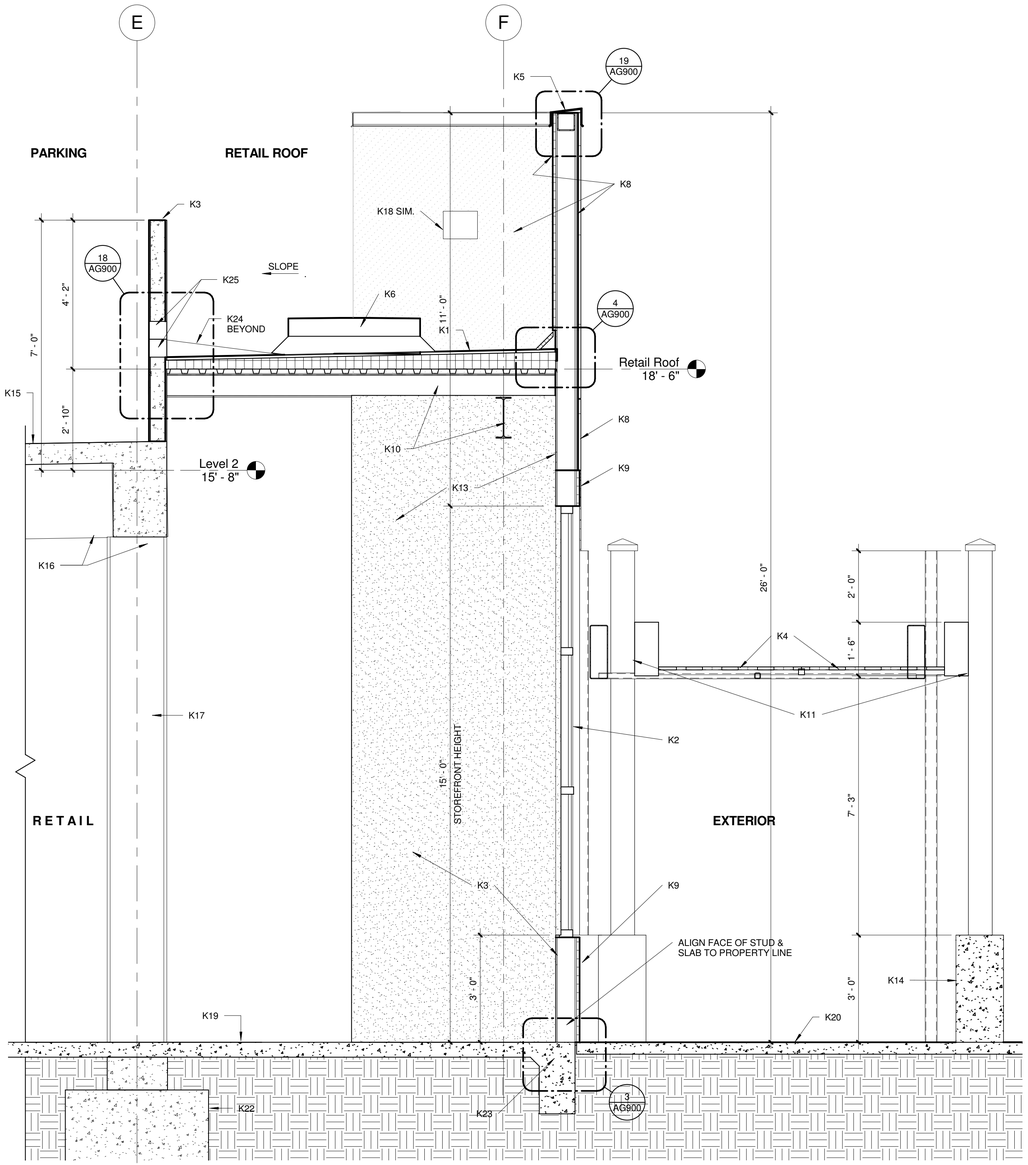

1 RETAIL WALL SECTION THRU SHADE SCREEN
1/2" = 1'-0"

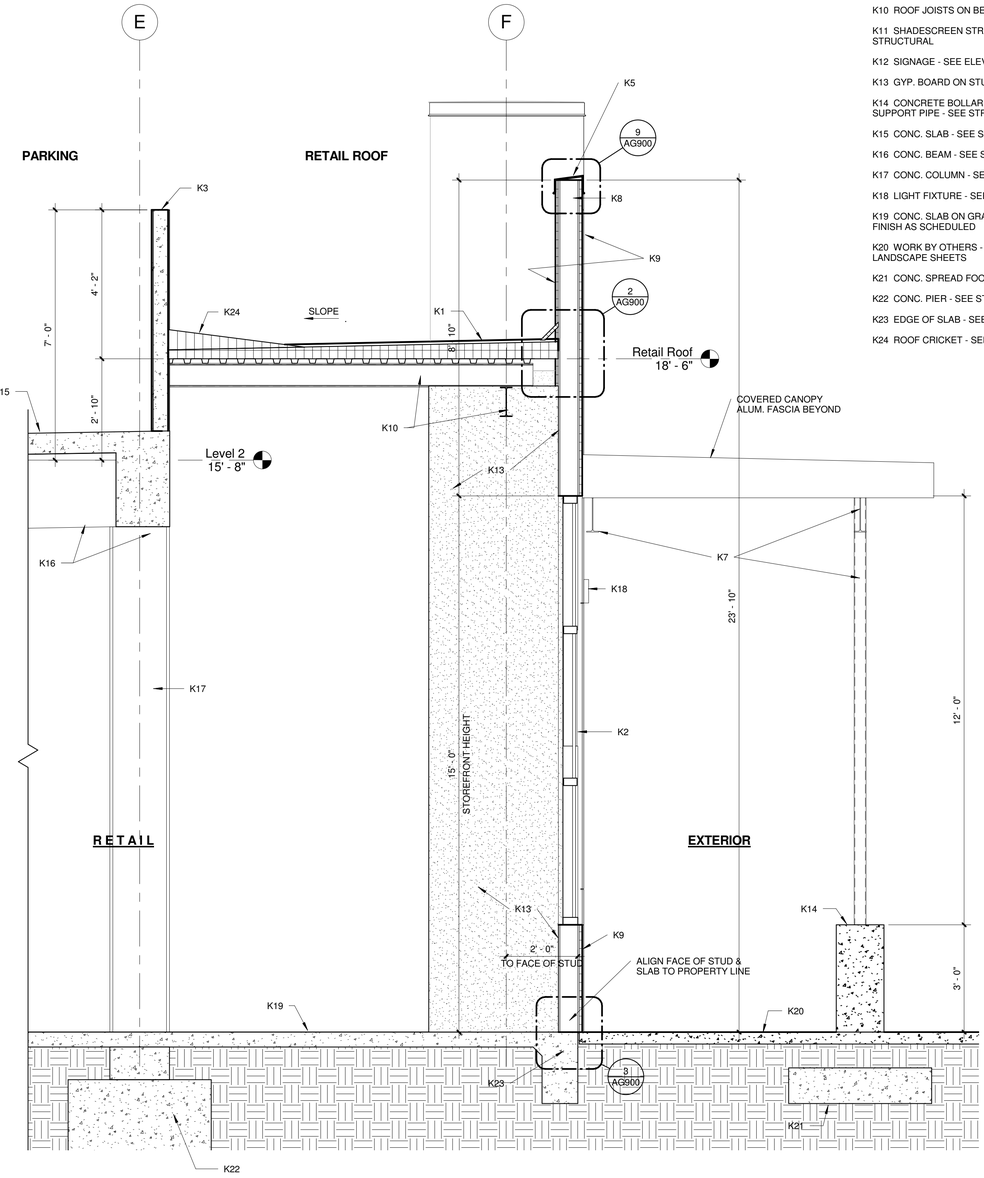

2 RETAIL WALL W/ COVERED CANOPY BEYOND
N.T.S.

100% CONSTRUCTION DOCUMENTS

exigo
ARCHITECTURE INSPIRED BY PURPOSE

REFERENCES – BENCHMARKS

No.	DATE	REVISIONS	BY

ARCHITECT'S SEAL
REGISTERED ARCHITECT
ROBERT E. BROWN
12937
STATE OF TEXAS
03/03/2016

SCALE
HOR: SHOWN
VER: SHOWN

DATE 03/03/16
DESIGN BY Designer
DRAWN BY Author
CHKD BY Checker
APPD BY Approver

PROJECT NAME
NORTHGATE TRANSFER CENTER
EL PASO, TEXAS.

CITY OF EL PASO
CAPITAL IMPROVEMENT DEPARTMENT

SHEET TITLE
WALL SECTIONS @ RETAIL

SHEET
AG705

GENERAL NOTES

1. COORDINATE LOCATION OF LIGHT FIXTURES AND ROOF DRAIN SCUPPERS TO AVOID CONFLICT - SEE ELECTRICAL.
2. COORDINATE THE INSTALLATION OF J-BOXES, POWER CONDUIT, ETC., WITH THE CONSTRUCTION OF MASONRY - SEE ELECTRICAL.
3. RETAIL ROOF SLOPE SHALL BE ACCOMPLISHED BY ADDING LAYERS OF RIGID INSULATION. **SLOPE 1/4" / FT.**
4. LIGHT FIXTURES ON RETAIL ROOF TO BE MOUNTED ON APPROPRIATE BASE TO ENSURE LEAK-PROOF INSTALLATION. SEE ELECTRICAL.

KEYED NOTES

K1 T.P.O ROOF ON PLYWOOD SHEATHING ON RIGID INSULATION ON METAL DECK

K2 ALUMINUM STOREFRONT

K3 CONCRETE WALL - SEE STRUCTUAL

K4 ALUMINUM SHADING SCREEN

K5 CONTINUOUS METAL COPING

K6 ROOF CURB FOR FUTURE EQUIPMENT - COORDINATE W/ MECH. & STRUCT. COVER OPENING WITH SHEET METAL CAP SECURED IN PLACE W/ SCREWS.

K7 COVERED CANOPY - SEE STRUCTURAL FOR FRAMING (PAINT EXPOSED).

K8 FIBER CEMENT FINISH ON STUDS

K9 STUCCO ON STUDS

K10 ROOF JOISTS ON BEAM - SEE STRUCTURAL

K11 METAL FRAME (PAINT) FOR CANOPY - SEE STRUCTURAL

K12 SIGNAGE - SEE ELEVATIONS

K13 GYP. BOARD ON STUDS

K14 CONCRETE BOLLARD AROUND CANOPY SUPPORT PIPE - SEE STRUCTUAL

K15 CONC. SLAB - SEE STRUCTURAL

K16 CONC. BEAM - SEE STRUCTURAL

K17 CONC. COLUMN - SEE STRUCTURAL

K18 LIGHT FIXTURE - SEE ELECTRICAL

K19 CONC. SLAB ON GRADE - SEE STRUCTURAL. FINISH AS SCHEDULED

K20 WORK BY OTHERS - SEE CIVIL AND LANDSCAPE SHEETS

K21 CONC. FOOTING - SEE STRUCTURAL

K22 CONC. PIER - SEE STRUCTURAL

K23 EDGE OF SLAB - SEE STRUCTURAL

K24 ROOF CRICKET - SEE ROOF PLAN

K25 DOOR AS SCHEDULED

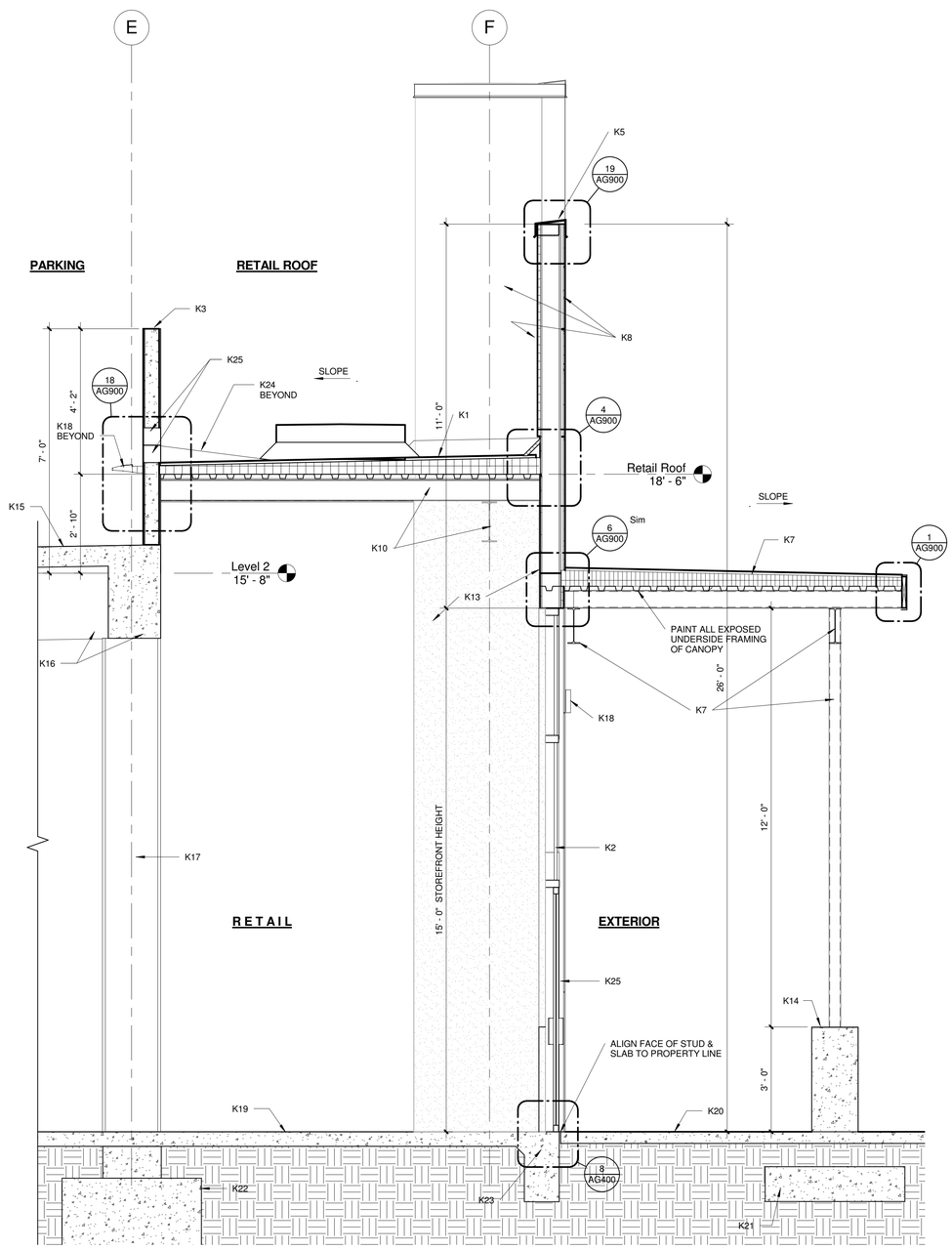

1 RETAIL WALL SECTION THROUGH COVERED CANOPY
1/2" = 1'-0"

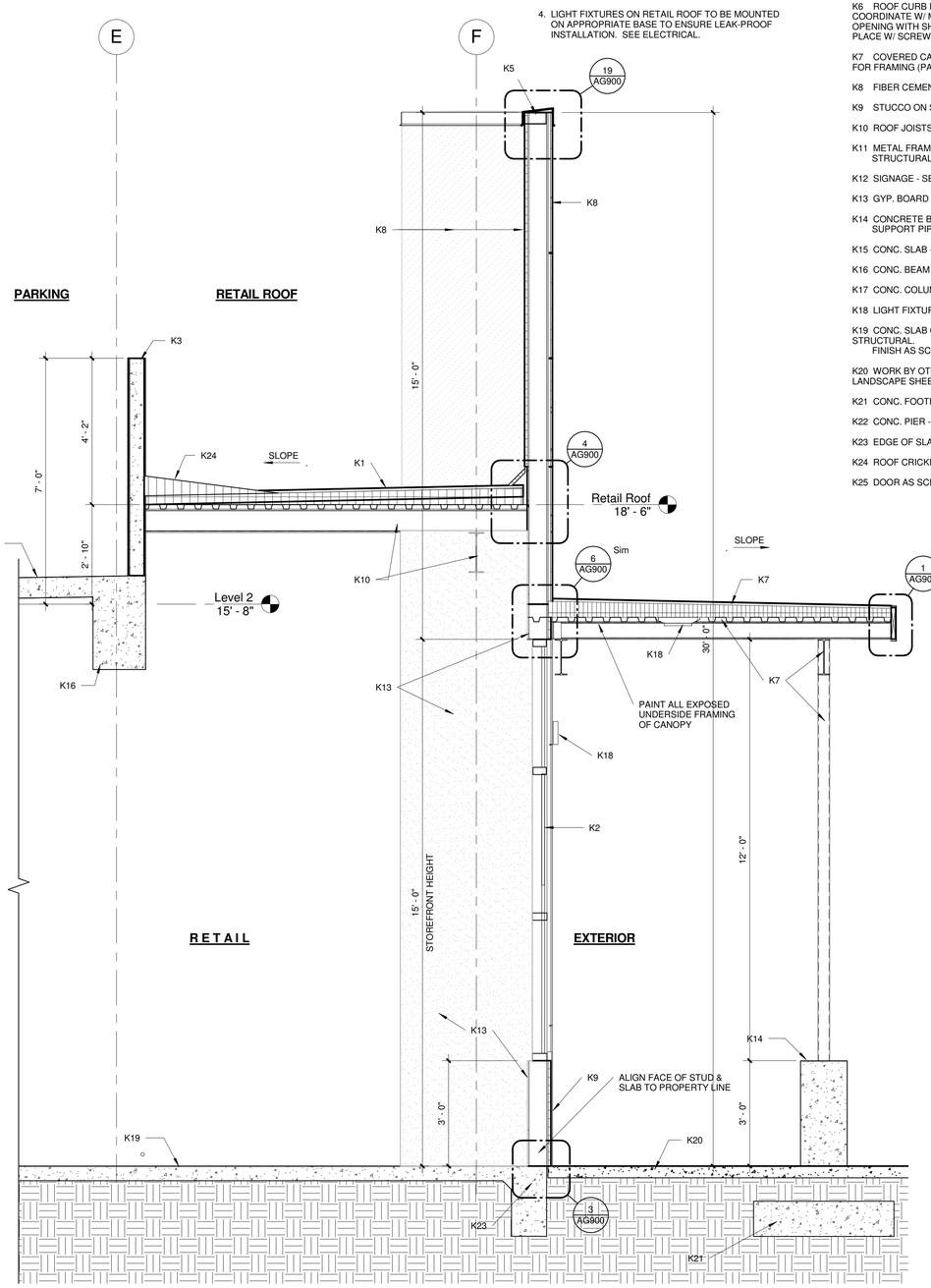

2 RETAIL WALL SECTION THRU COVERED CANOPY
1/2" = 1'-0"

100% CONSTRUCTION DOCUMENTS

exigo
ARCHITECTURE INSPIRED BY PURPOSE

REFERENCES – BENCHMARKS

No.	DATE	REVISIONS	BY

ARCHITECT'S SEAL

REGISTERED ARCHITECT ROBERTO MENDOZA 12937 STATE OF TEXAS

03/03/2016

SCALE
HOR: SHOWN
VER: SHOWN

DATE 03/03/16
DESIGN BY Designer
DRAWN BY Author
CHKD BY Checker
APPD BY Approver

PROJECT NAME
NORTHGATE TRANSFER CENTER
EL PASO, TEXAS.

CITY OF EL PASO
CAPITAL IMPROVEMENT DEPARTMENT

THE CITY OF EL PASO TEXAS

SHEET TITLE
WALL SECTIONS @ RETAIL

SHEET
AG706

GENERAL NOTES

1. COORDINATE LOCATION OF LIGHT FIXTURES AND ROOF DRAIN SCUPPERS TO AVOID CONFLICT - SEE ELECTRICAL.
2. COORDINATE THE INSTALLATION OF J-BOXES, POWER CONDUIT, ETC., WITH THE CONSTRUCTION OF MASONRY - SEE ELECTRICAL.
3. RETAIL ROOF SLOPE SHALL BE ACCOMPLISHED BY ADDING LAYERS OF RIGID INSULATION. **SLOPE 1/4" / FT.**
4. LIGHT FIXTURES ON RETAIL ROOF TO BE MOUNTED ON APPROPRIATE BASE TO ENSURE LEAK-PROOF INSTALLATION. SEE ELECTRICAL.

KEYED NOTES

K1 T.P.O ROOF ON PLYWOOD SHEATHING ON RIGID INSULATION ON METAL DECK

K2 ALUMINUM STOREFRONT

K3 CONCRETE WALL - SEE STRUCTUAL

K4 ALUMINUM SHADING SCREEN

K5 CONTINUOUS METAL COPING

K6 ROOF CURB FOR FUTURE EQUIPMENT - COORDINATE W/ MECH. & STRUCT. COVER OPENING WITH SHEET METAL CAP SECURED IN PLACE W/ SCREWS.

K7 PARKING GARAGE SLAB - SEE STRUCTURAL

K8 FIBER CEMENT FINISH ON STUDS

K9 STUCCO ON STUDS

K10 ROOF JOISTS ON BEAM - SEE STRUCTURAL

K11 METAL CANOPY

K12 SIGNAGE - SEE ELEVATIONS

K13 GYP. BOARD ON STUDS

K14 CONCRETE BOLLARD AROUND CANOPY SUPPORT PIPE - SEE STRUCTUAL

K15 2ND LEVEL CONCRETE PARKING SLAB - SEE STRUCTURAL

K16 CONC. BEAM - SEE STRUCTURAL

K17 CONC. COLUMN - SEE STRUCTURAL

K18 CONC. PIER - SEE STRUCTURAL

K19 EDGE OF SLAB - SEE STRUCTURAL

K20 ROOF CRICKET - SEE ROOF PLAN

K21 LIGHT FIXTURE - SEE ELECTRICAL

K22 EXPANSION JOINT COVER

K23 WORK BY OTHERS - SEE CIVIL & LANDSCAPE SHEETS

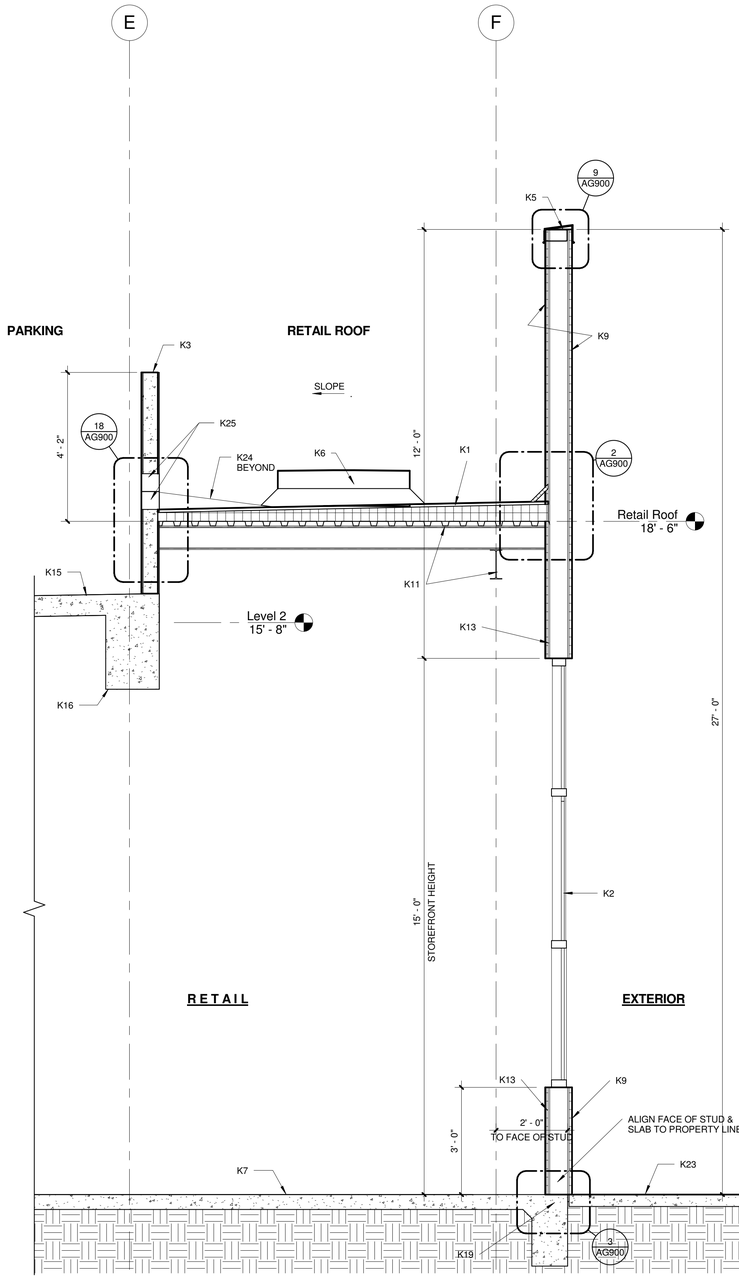

1 RETAIL WALL SECTION
1/2" = 1'-0"

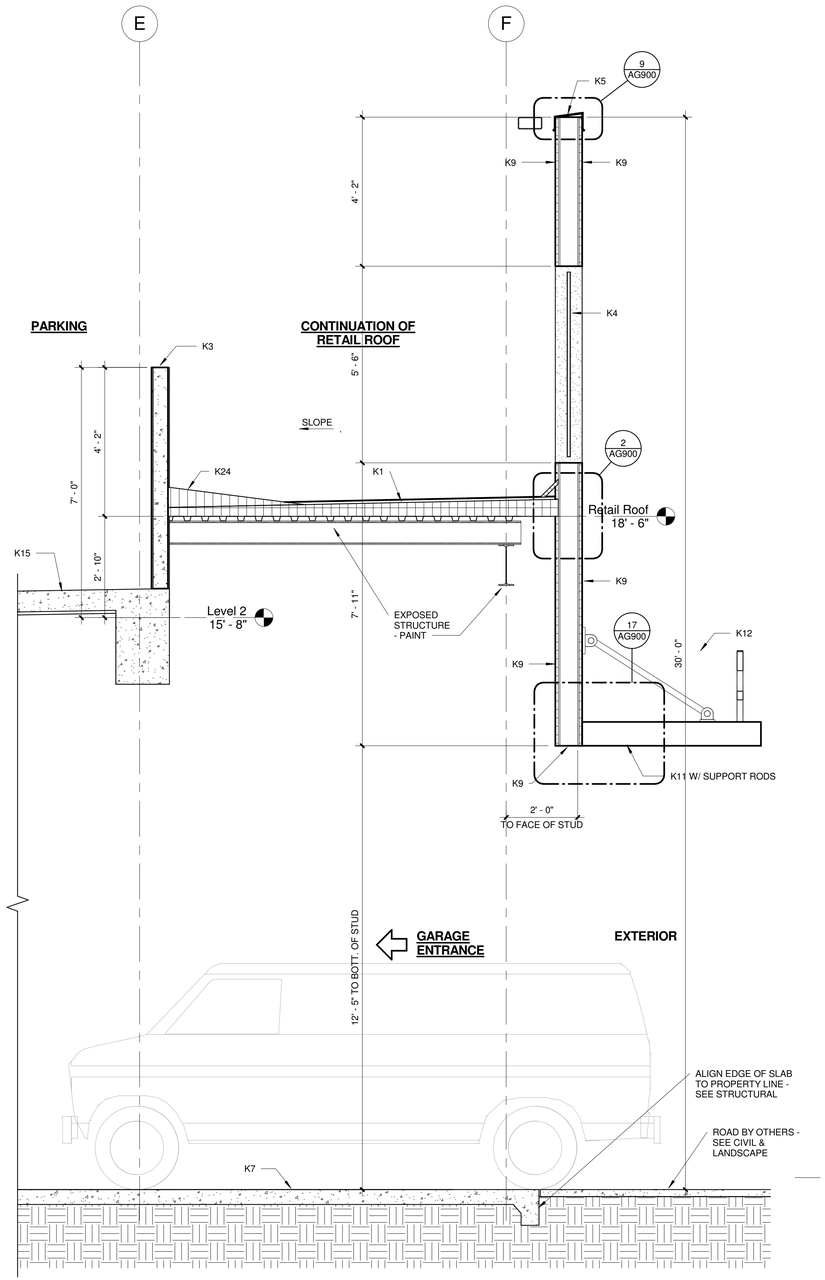

2 RETAIL WALL SECTION @ GARAGE ENTRANCE
1/2" = 1'-0"

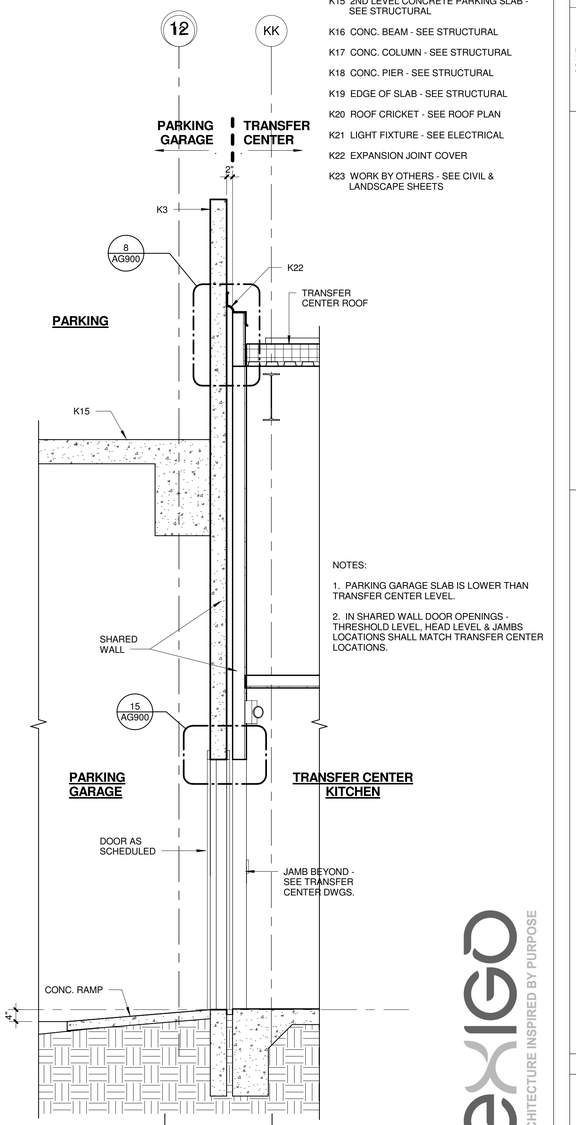

3 SHARED WALL SECTION (@ KITCHEN)
1/2" = 1'-0"

100% CONSTRUCTION DOCUMENTS

REFERENCES – BENCHMARKS

No.	DATE	REVISIONS	BY

ARCHITECT'S SEAL

REGISTERED ARCHITECT ROBERTO MENDOZA 12937 STATE OF TEXAS

03/03/2016

SCALE
HOR: SHOWN
VER: SHOWN

DATE 03/03/16
DESIGN BY Designer
DRAWN BY Author
CHKD BY Checker
APPD BY Approver

PROJECT NAME

NORTHGATE TRANSFER CENTER

EL PASO, TEXAS.

CITY OF EL PASO
CAPITAL IMPROVEMENT DEPARTMENT

exigo
ARCHITECTURE INSPIRED BY PURPOSE

SHEET TITLE

WALL SECTIONS @ RETAIL

SHEET
AG707

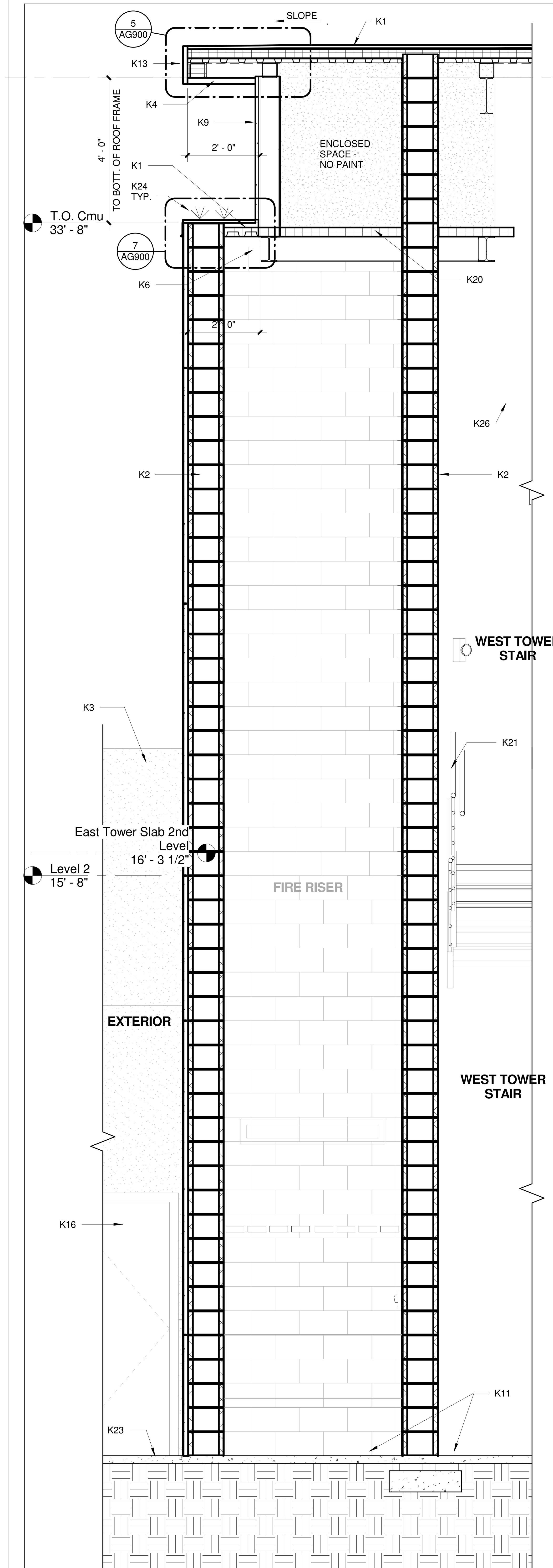

4 WALL SECTIONS THRU FIRE RISER RM
1/2" = 1'-0"

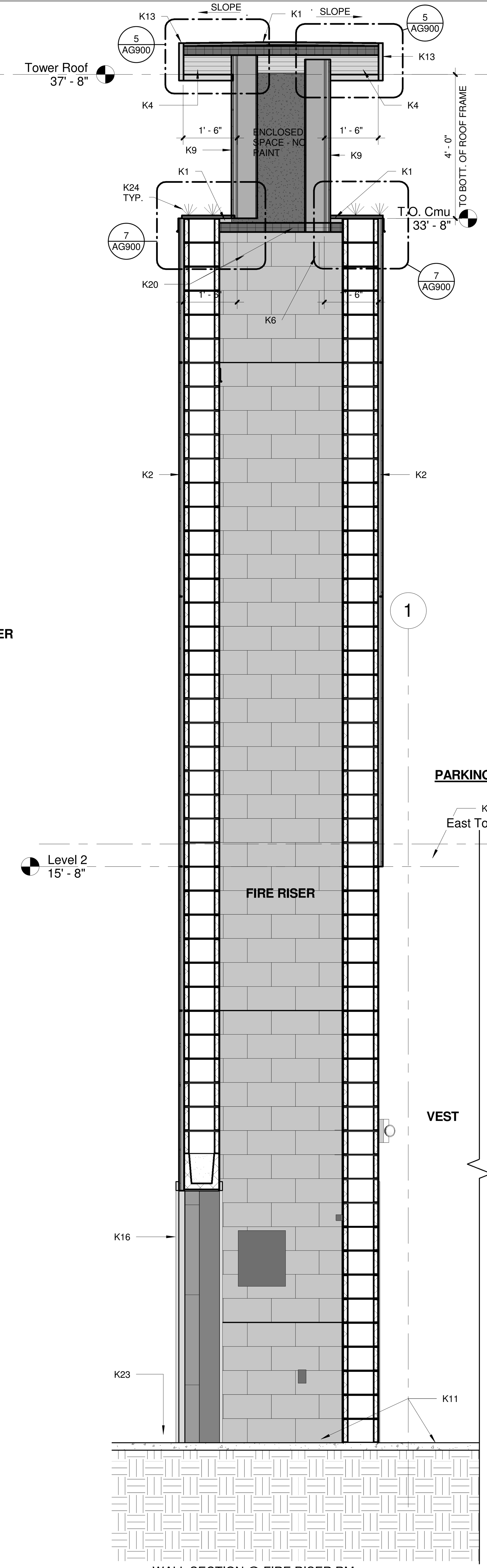

3 WALL SECTION @ FIRE RISER RM.
1/2" = 1'-0"

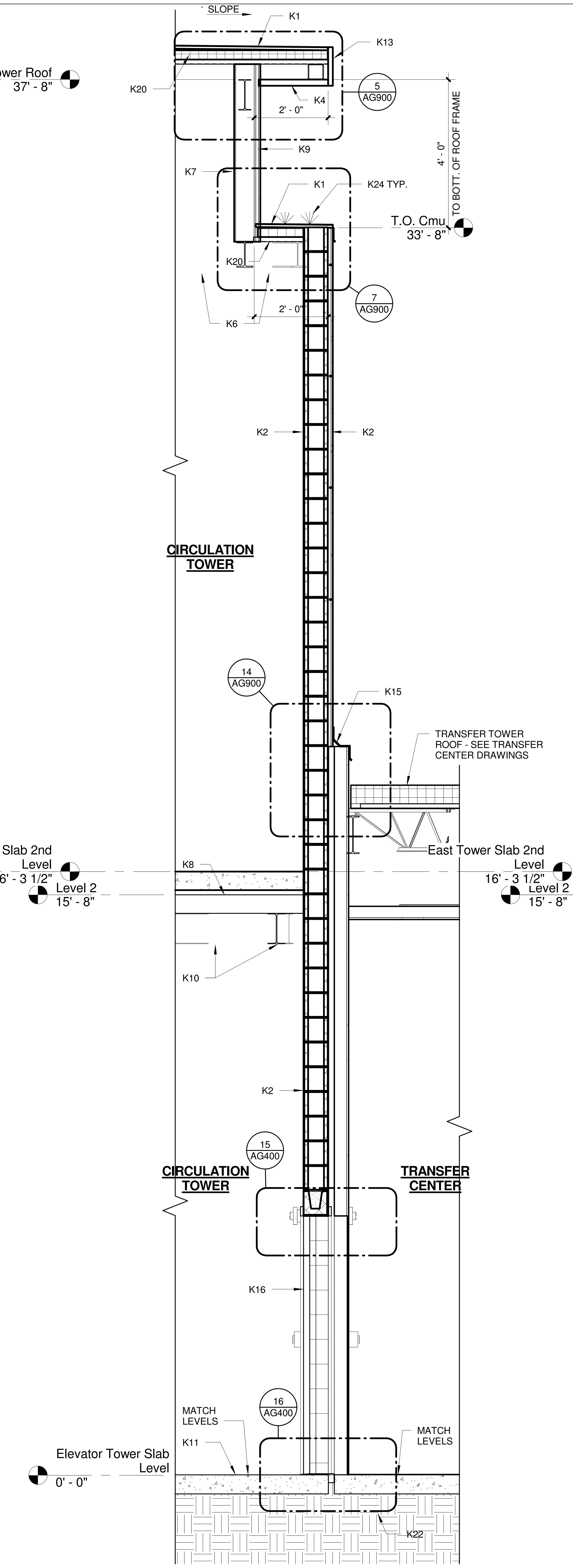

2 WALL SECTION @ EAST TOWER & TRANSFER CENTER
1/2" = 1'-0"

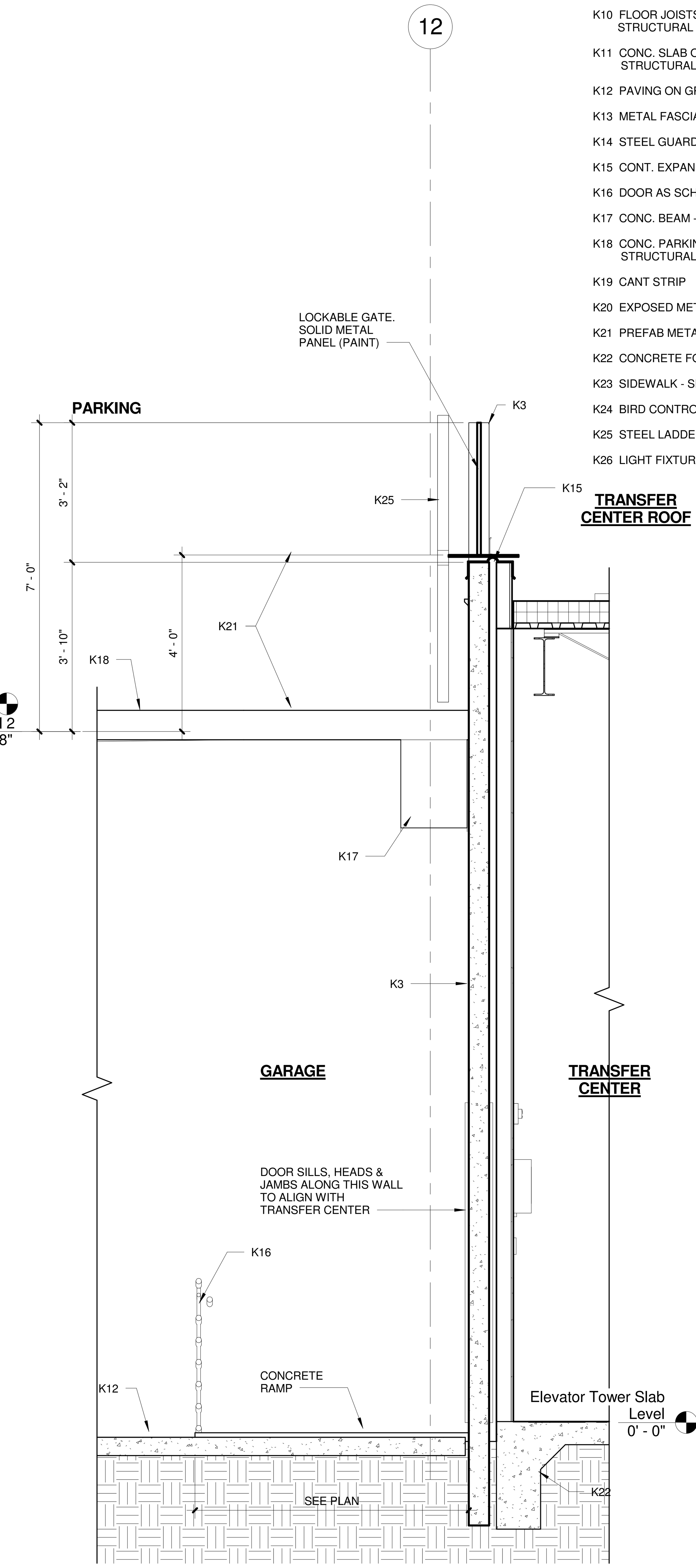

1 WALL SECTION @ ROOF LADDER
1/2" = 1'-0"

GENERAL NOTES

1. SEE TRANSFER CENTER DRAWINGS FOR CONTINUATION OF TRANSFER CENTER SIDE.
2. INTERIOR SIDE CMU TO HAVE EPOXY PAINT, 2 COATS
3. SEE ROOF PLAN SHEET FOR ROOF SLOPES

KEYED NOTES

- K1 T.P.O. ROOF ON PLYWOOD SHEATHING ON 2 LAYERS (MIN.) RIGID INSULATION ON METAL DECK
- K2 CMU (FINISH AS SCHEDULED) - SEE STRUCTURAL
- K3 CONCRETE WALL - SEE STRUCTURAL
- K4 METAL PANEL SOFFIT
- K5 CONTINUOUS METAL FLASHING
- K6 ROOF JOISTS (PAINT EXPOSED) - SEE STRUCTURAL
- K7 GYP. BOARD ON STUDS
- K8 CONC. FLOOR ON METAL DECK - SEE STRUCT. FINISH AS SCHEDULED
- K9 FIBER CEMENT BOARD ON STUDS
- K10 FLOOR JOISTS (PAINT EXPOSED) - SEE STRUCTURAL
- K11 CONC. SLAB ON GRADE - SEE STRUCTURAL (FINISH AS SCHEDULED)
- K12 PAVING ON GRADE - SEE STRUCTURAL
- K13 METAL FASCIA
- K14 STEEL GUARDRAIL (PAINT)
- K15 CONT. EXPANSION JOINT FLASHING
- K16 DOOR AS SCHEDULED
- K17 CONC. BEAM - SEE STRUCTURAL
- K18 CONC. PARKING LEVEL SLAB - SEE STRUCTURAL
- K19 CANT STRIP
- K20 EXPOSED METAL DECK (PAINT)
- K21 PREFAB METAL STAIRS (PAINT)
- K22 CONCRETE FOOTING - SEE STRUCTURAL
- K23 SIDEWALK - SEE CIVIL
- K24 BIRD CONTROL DEVICE AS SPECIFIED
- K25 STEEL LADDER - PAINT
- K26 LIGHT FIXTURE - SEE ELECTRICAL

100% CONSTRUCTION DOCUMENTS

exigo ARCHITECTURE INSPIRED BY PURPOSE

REFERENCES -- BENCHMARKS

REVISIONS | DATE | No.

ARCHITECTS SEAL
REGISTERED ARCHITECT EUGENIO MIERA 12937 STATE OF TEXAS
03/03/2016

SCALE HOR: SHOWN VER: SHOWN

DATE: DSGN; DESIGN BY: Designer; DRAWN BY: Author; CHKD. BY: Checker; APPD. BY: Approver

PROJECT NAME
NORTHGATE TRANSFER CENTER
EL PASO, TEXAS.

CITY OF EL PASO
CAPITAL IMPROVEMENT DEPARTMENT

THE CITY OF EL PASO TEXAS

SHEET TITLE
WALL SECTIONS

SHEET
AG708

KEYED NOTES

K1 STEEL COLUMN - SEE STRUCTURAL
K2 CMU W/ STUCCO EXPOSED SIDES ONLY
K3 BACKER ROD & CONTINUOUS SEALANT
K4 CONCRETE WALL
K5 TRANSFER CENTER PARAPET WALL
K6 EXPANSION JOINT FLASHING

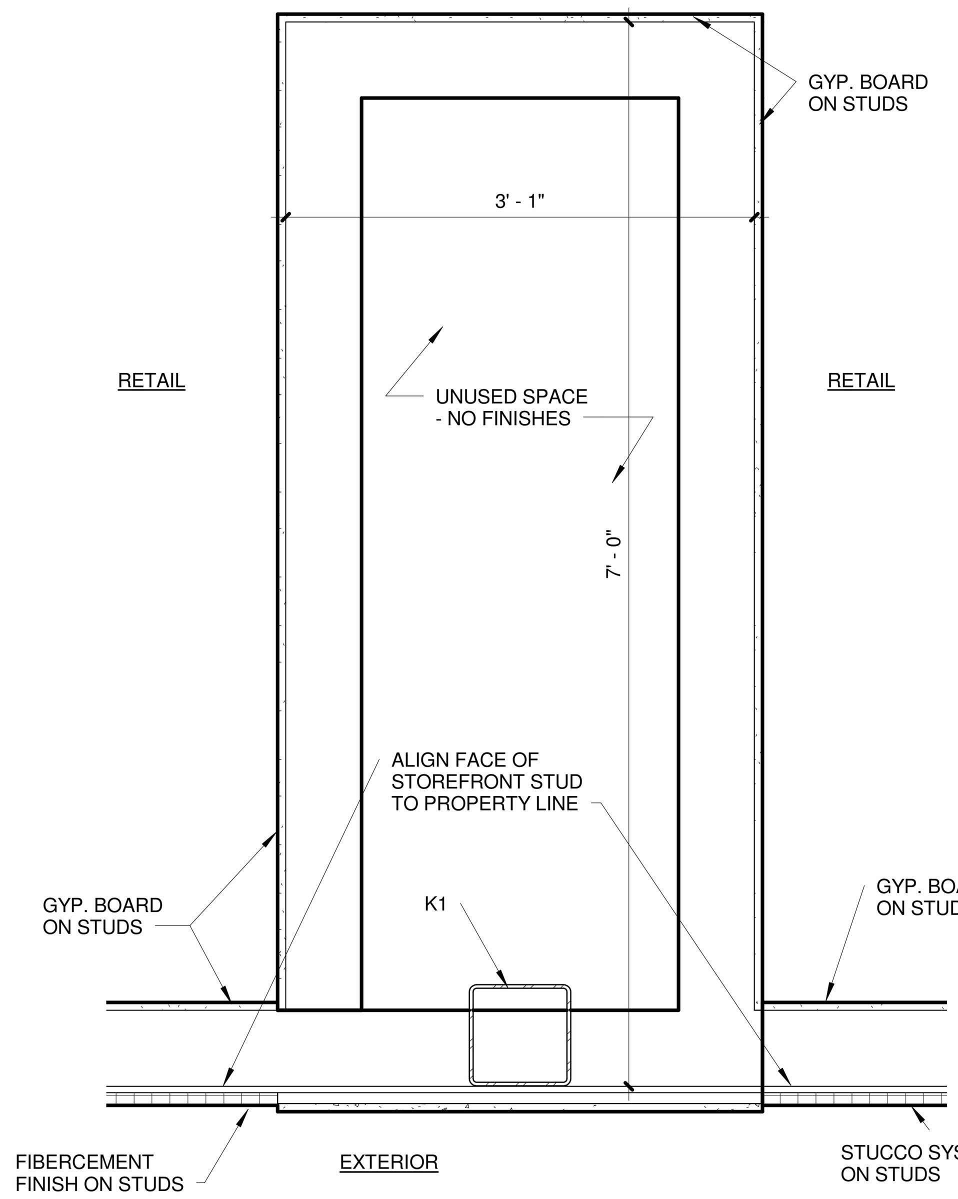

9 FURRED COLUMN PLAN @ RETAIL
1" = 1'-0"

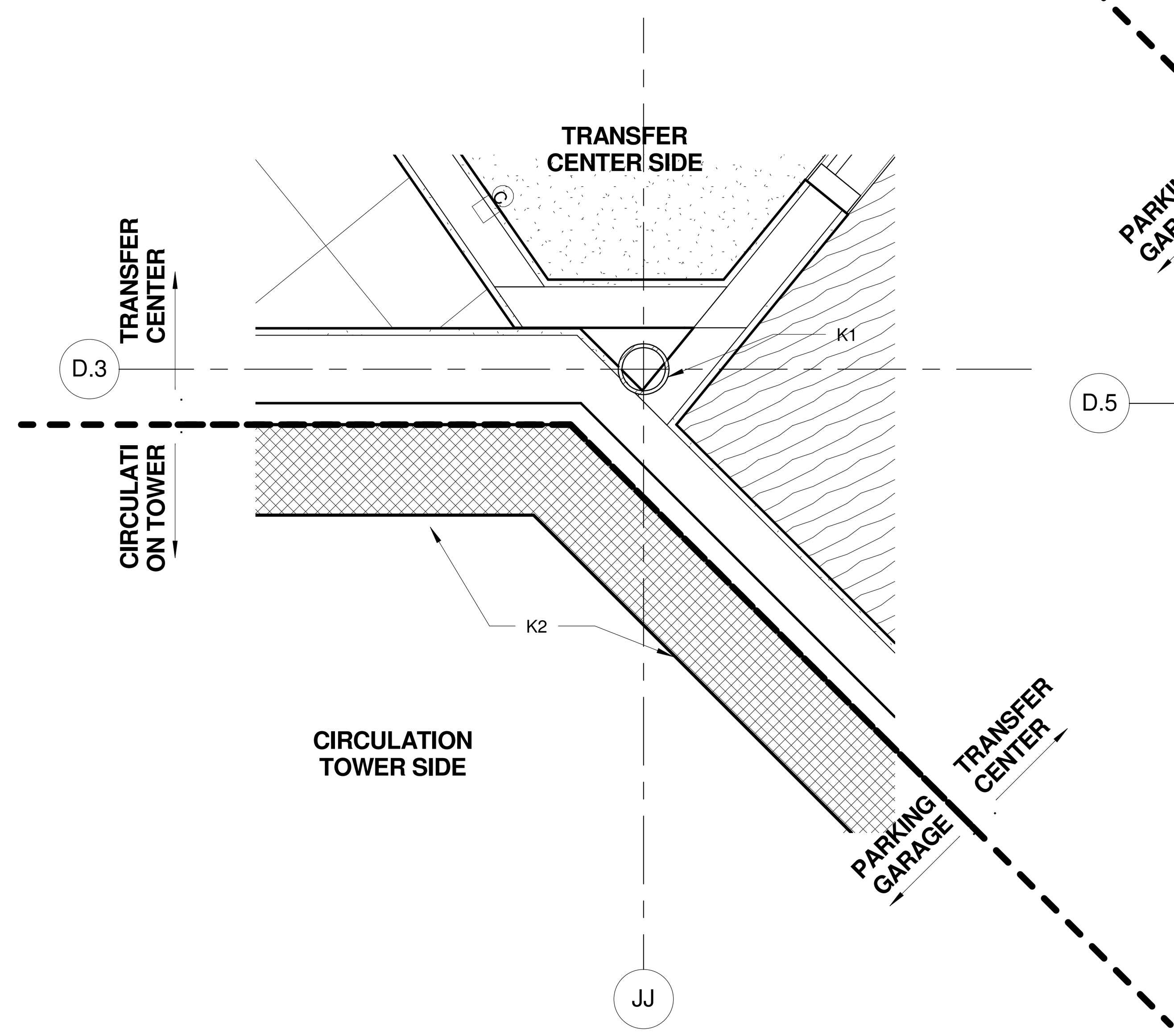

2 1ST LEVEL CORNER @ TOWER/TRANSFER CENTER
1" = 1'-0"

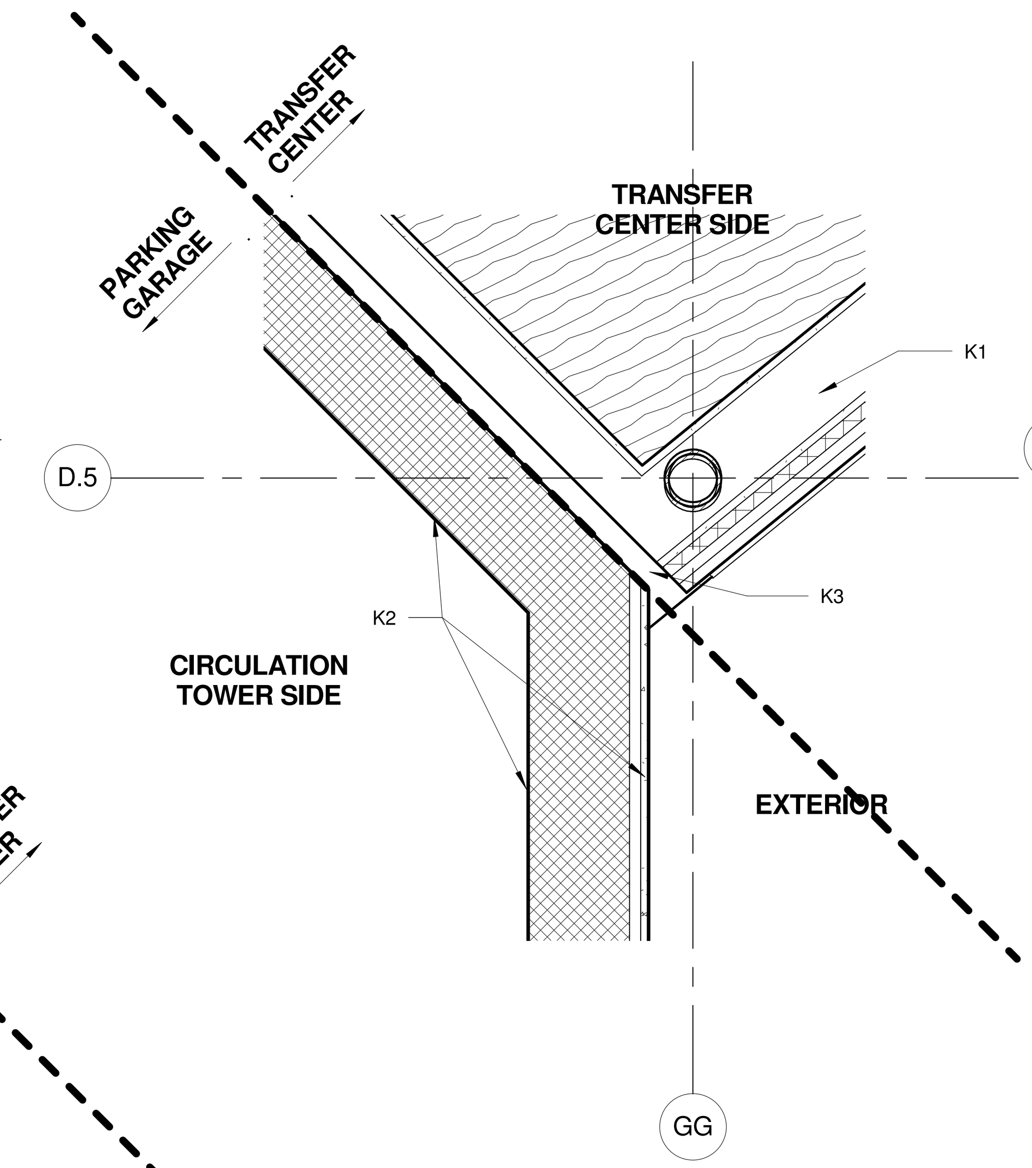

7 1ST LEVEL CORNER @ TOWER/TRANSFER CTR.
1" = 1'-0"

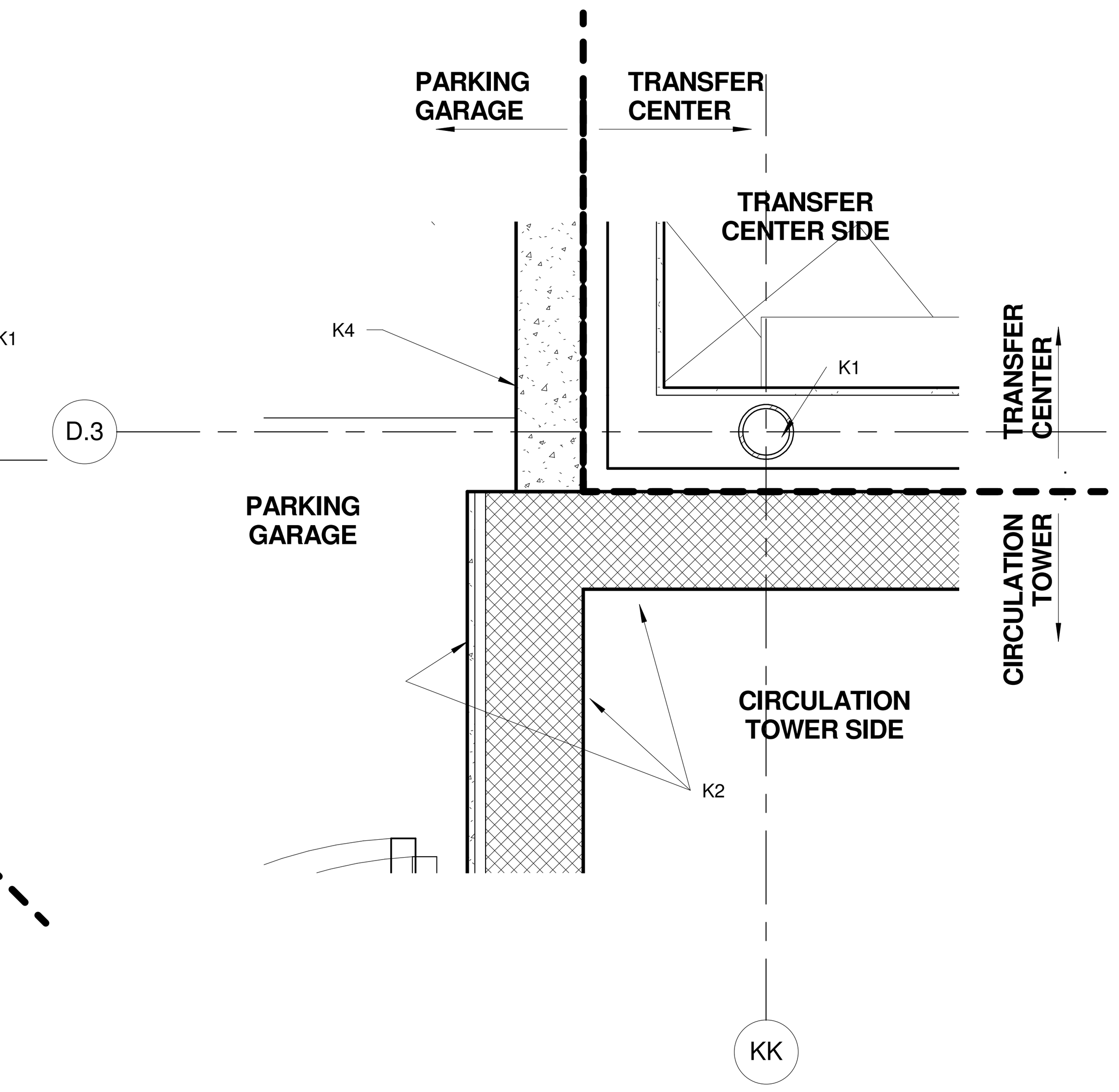

8 1ST LEVEL CORNER @ GARAGE/TOWER/TRANSFER CTR.
1" = 1'-0"

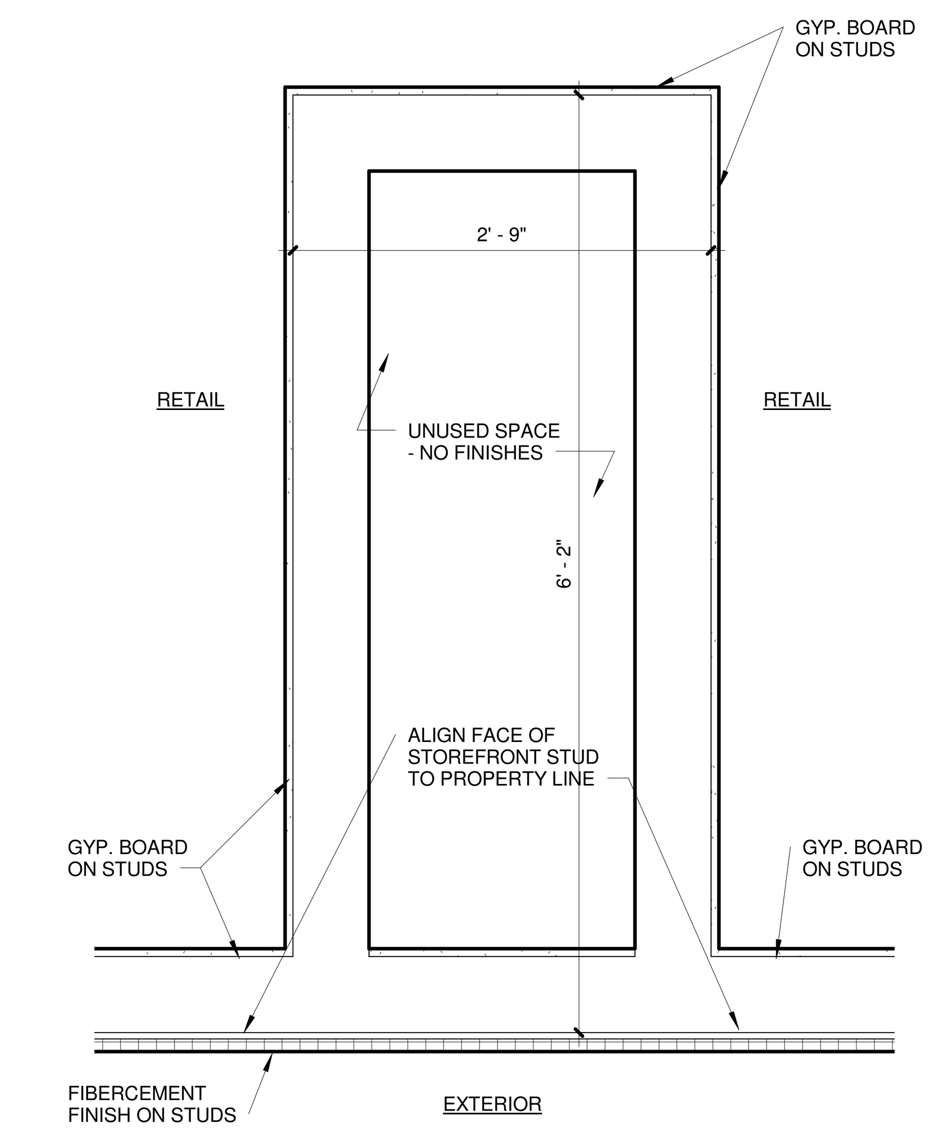

6 FURRED COLUMN PLAN @ RETAIL
1" = 1'-0"

GENERAL NOTE: SEE TRANSFER CENTER PLANS FOR CONTINUATION OF TRANSFER CENTER SIDE.

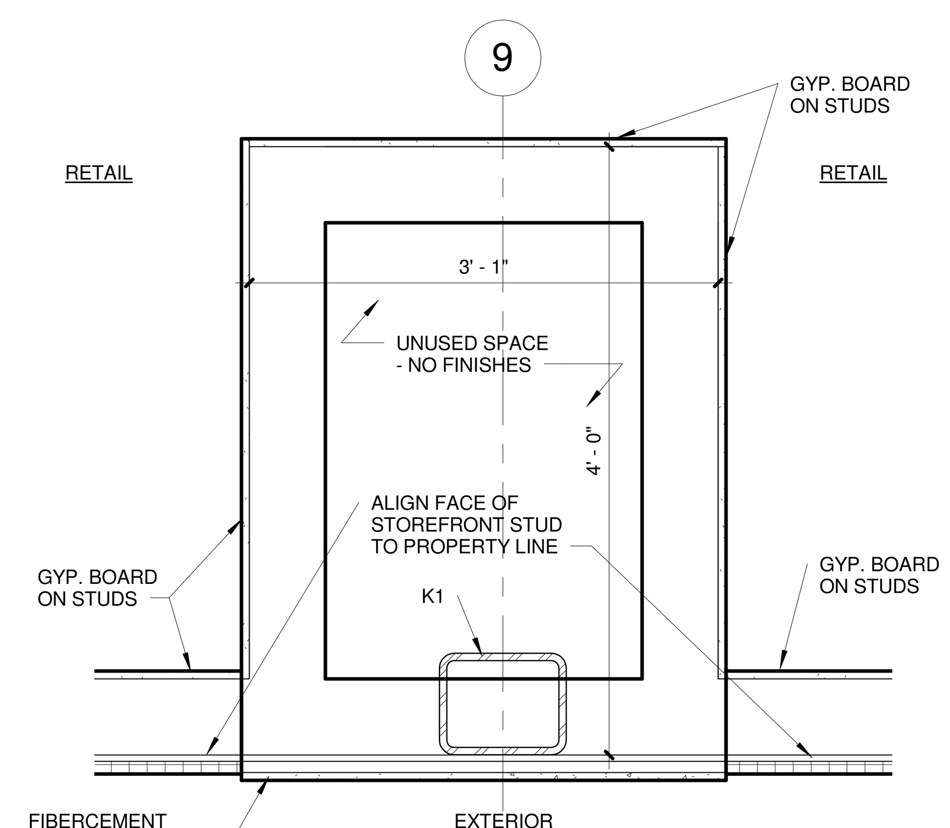

1 FURRED COLUMN PLAN @ RETAIL
1" = 1'-0"

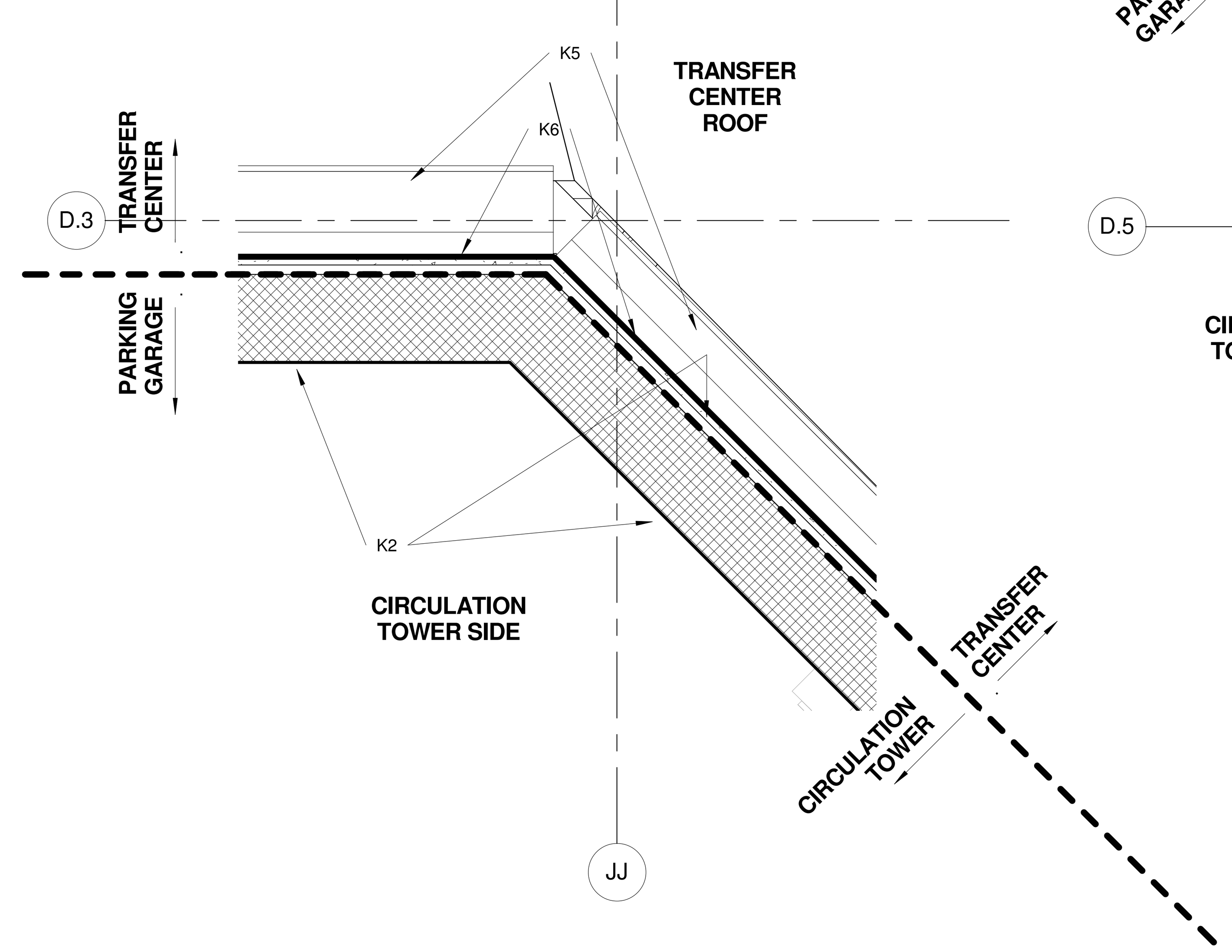

5 2ND LEVEL CORNER @ TOWER/TRANFSER CENTER
1" = 1'-0"

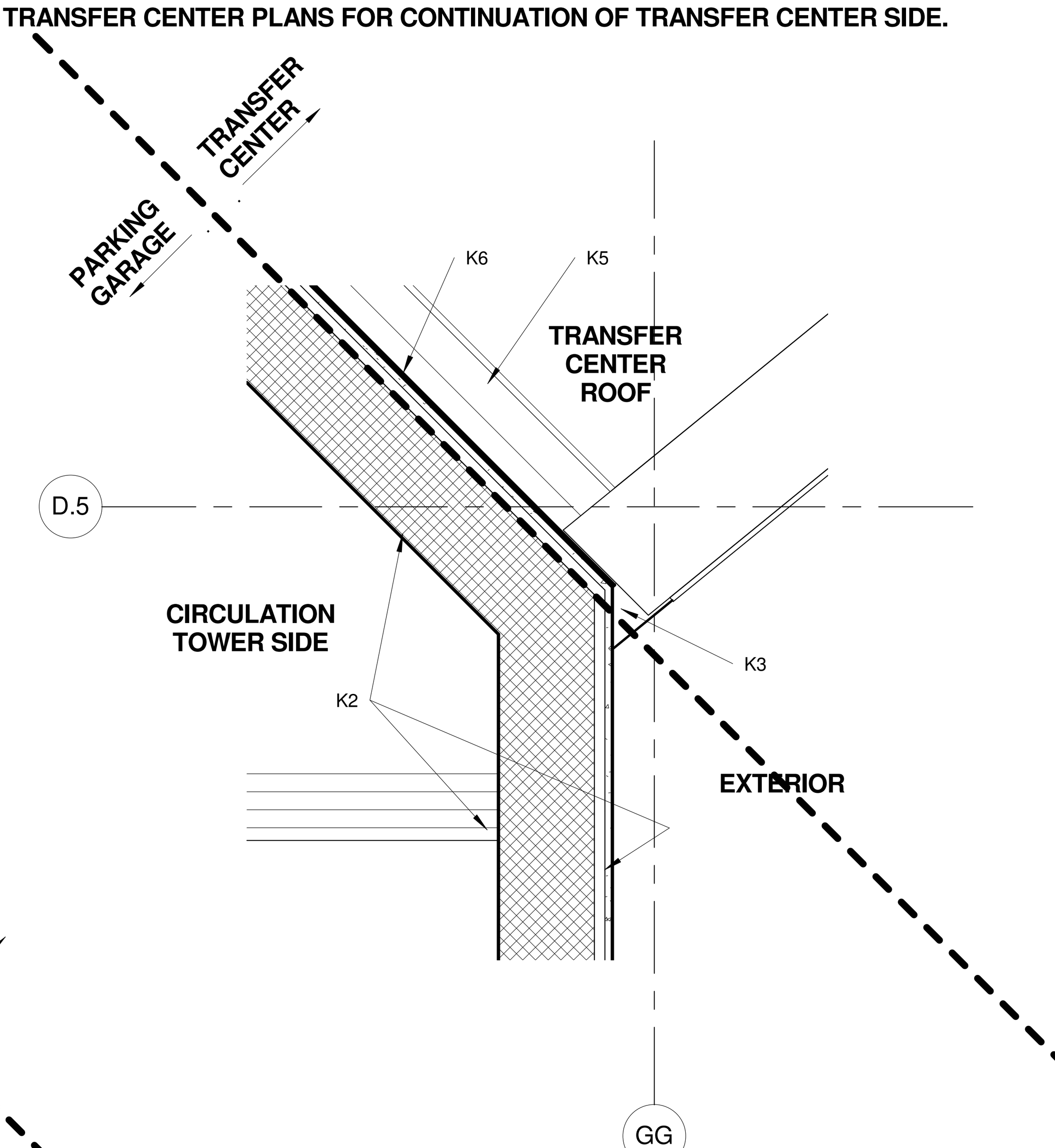

4 2ND LEVEL CORNER @ TOWER/TRANSFER CTR.
1" = 1'-0"

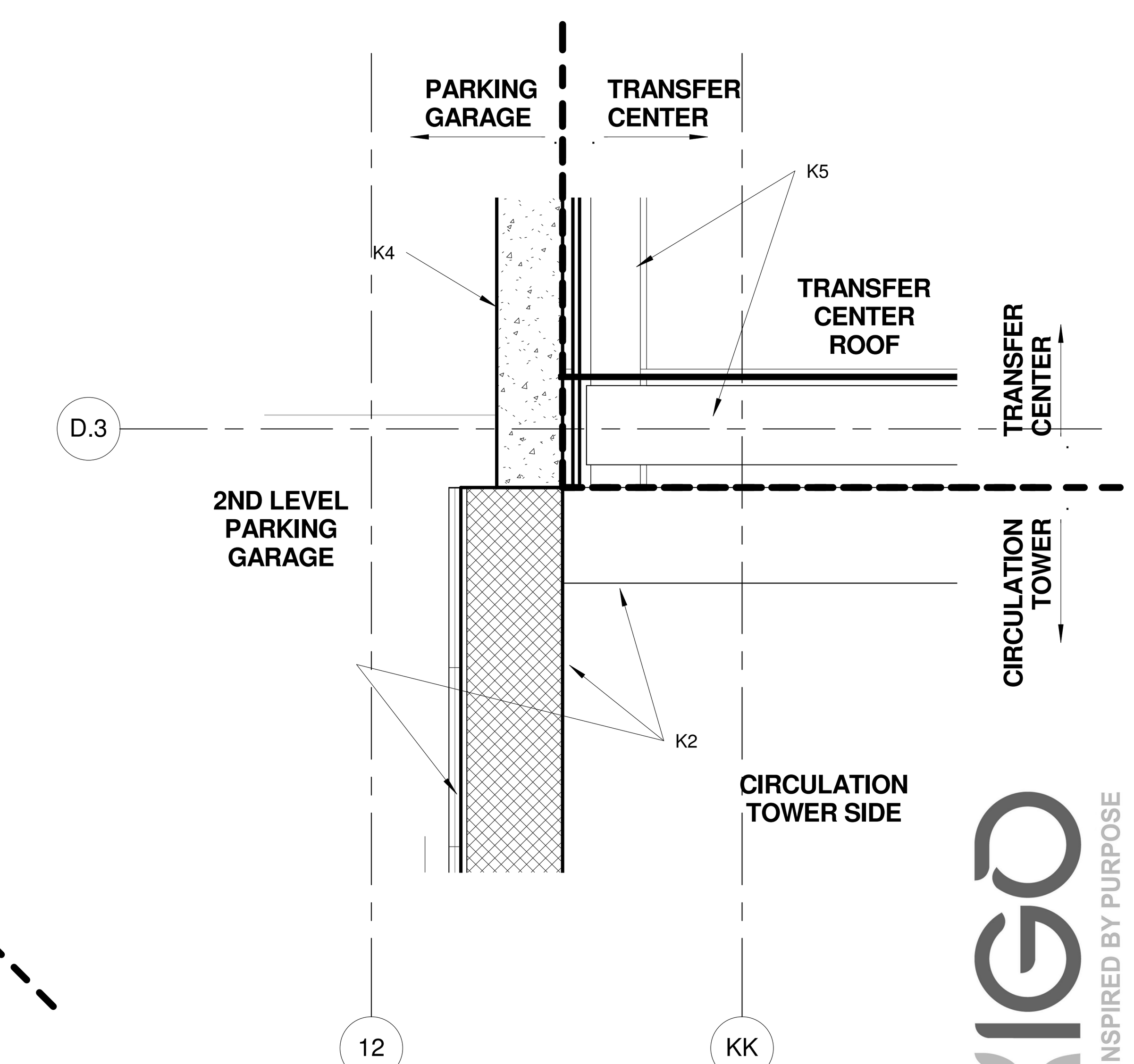

3 2ND LEVEL CORNER @ GARAGE/TOWER/TRANSFER CTR.
1" = 1'-0"

exigo ARCHITECTURE INSPIRED BY PURPOSE

100% CONSTRUCTION DOCUMENTS

REFERENCES -- BENCHMARKS

No. | DATE | REVISIONS | BY

ARCHITECTS SEAL
REGISTERED ARCHITECT EUGENIO MENDEZ 12937 STATE OF TEXAS
03/03/2016

SCALE
HOR: SHOWN
VER: SHOWN

DATE: 03/03/16
DESIGN BY: Designer
DRAWN BY: Author
CHKD. BY: Checker
APPD. BY: Approver

PROJECT NAME
NORTHGATE TRANSFER CENTER
EL PASO, TEXAS.

CITY OF EL PASO
CAPITAL IMPROVEMENT DEPARTMENT

THE CITY OF EL PASO TEXAS

SHEET TITLE
PLAN DETAILS

SHEET
AG800

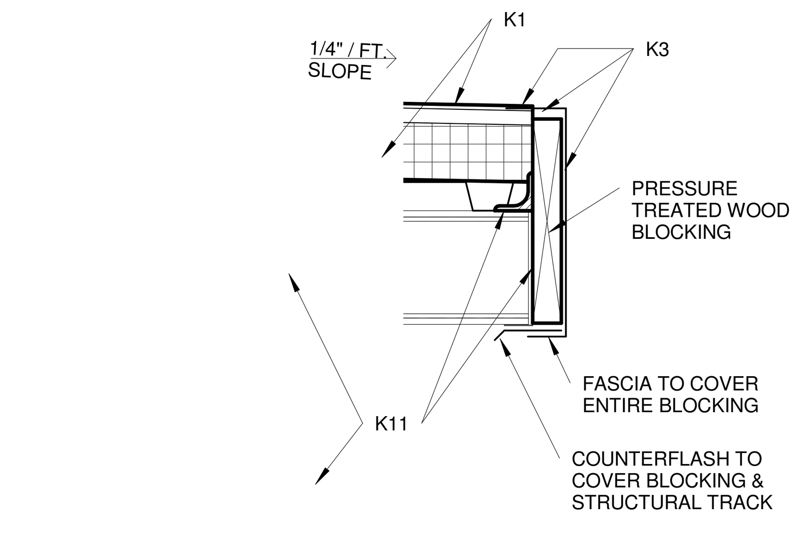

1 COVERED CANOPY END
1 1/2" = 1'-0"

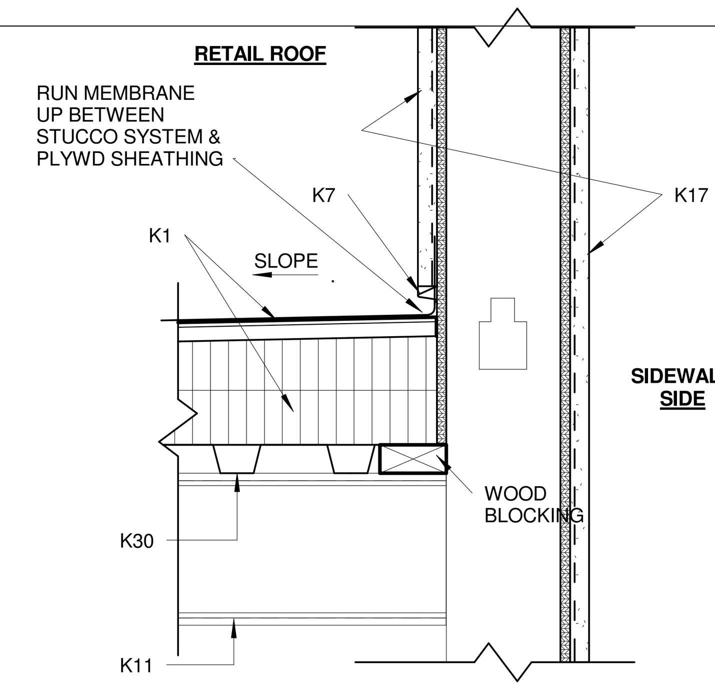

2 STUCCO STUD WALL @ RETAIL ROOF
1 1/2" = 1'-0"

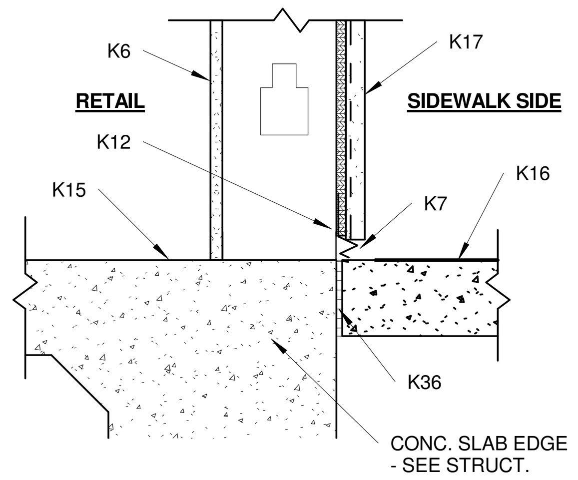

3 STUCCO ON STUD WALL SILL
1 1/2" = 1'-0"

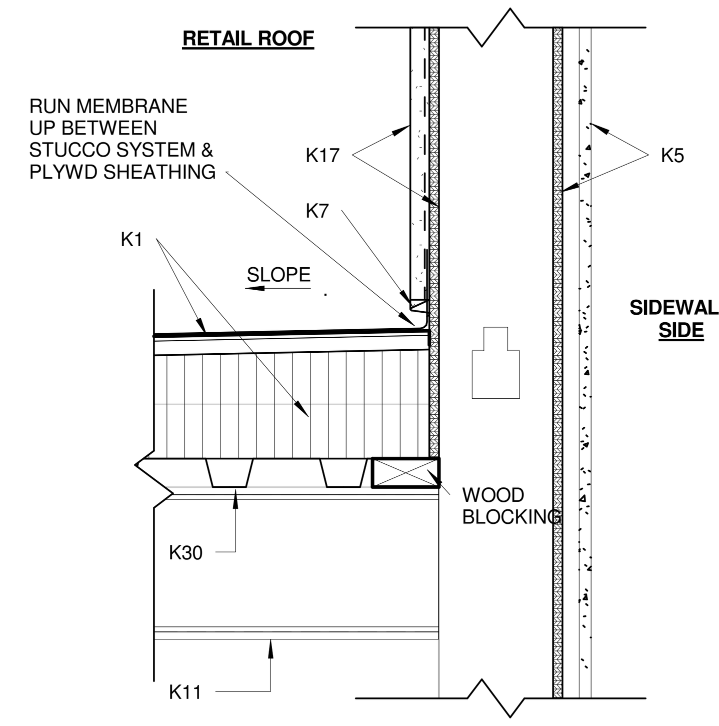

4 FIBER CEMENT/STUCCO STUD WALL @ RETAIL ROOF
1 1/2" = 1'-0"

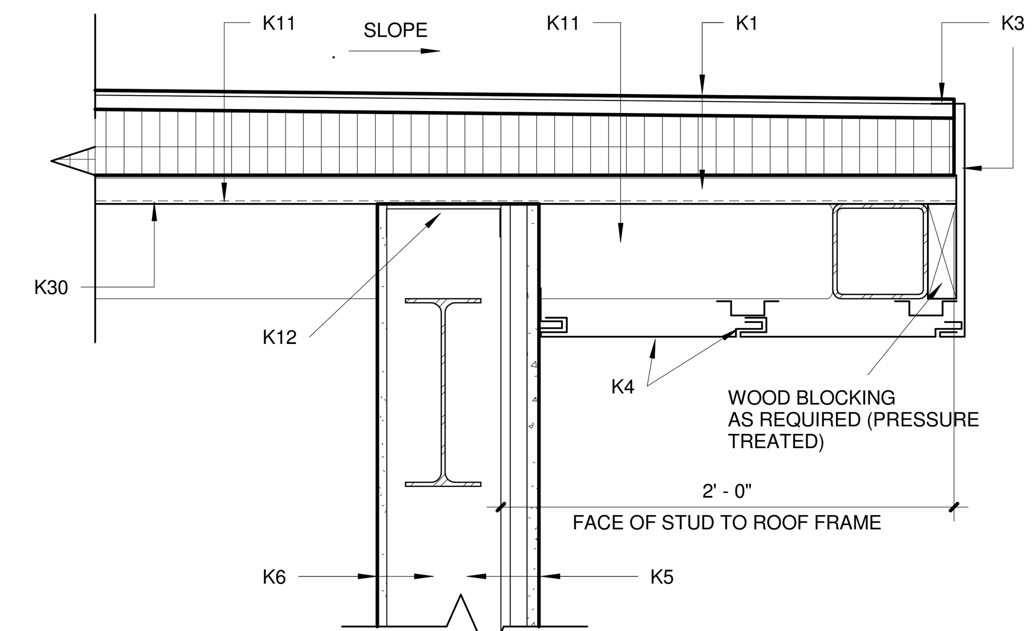

5 TOWER ROOF SOFFIT
1 1/2" = 1'-0"

GENERAL NOTES

1. SEE ROOF PLAN FOR ALL ROOF SLOPES.
2. INTERIOR SIDE CMU TO HAVE EPOXY PAINT - 2 COATS.
3. SUBGIRTS ARE PLACED VERTICAL.
4. METAL SOFFIT PANELS & ITS ALUMINUM FASCIA TO BE BY SAME MFGR.

KEYED NOTES

- K1 T.P.O. ROOF ON 3/4" PLYWOOD DECK ON 2 LAYERS (MIN.) OF 1 1/2" RIGID INSULATION ON METAL DECK. ADD LAYERS OF RIGID INSULATION TO CREATE SLOPE
- K2 METAL COPING - PAINT
- K3 ALUMINUM FASCIA. INSTALL TOP FLANGE UNDER T.P.O. MEMBRANE. INSURE MEMBRANE EDGE IS FULLY SECURED OVER TOP FASCIA FLANGE.
- K4 SINGLE SKIN METAL PANEL SYSTEM T & G. COLOR TO BE SELECTED FROM RANGE OF MFGR. COLORS
- K5 5/8" FIBER CEMENT BOARD ON 7/8" SUBGIRT ON 1/2" PLYWOOD SHEATHING ON 6" METAL STUDS @ 16" O.C.
- K6 5/8" GYP. BOARD (TEXTURE & PAINT) ON 6" METAL STUDS @ 16" O.C.
- K7 CONTINUOUS WEEP SCREED
- K8 CANT STRIP
- K9 ROOF EDGE METAL FLASHING - PAINT
- K10 CMU W/ FINISH AS SCHEDULED - SEE STRUCTURAL ALSO
- K11 ROOF FRAMING (PAINT EXPOSED) SEE STRUCTURAL
- K12 STUD TRACK
- K13 PRESSURE-TREATED WOOD BLOCKING. TAPER TO ACCOMODATE COPING SLOPE
- K14 ROOF EDGE METAL FLASHING (PAINT). INSTALL TOP FLANGE UNDER T.P.O. MEMBRANE
- K15 CONCRETE SLAB ON GRADE - SEE STRUCTURAL (FINISH AS SCHEDULED)
- K16 WORK BY OTHERS - SEE CIVIL AND LANDSCAPE SHEETS
- K17 STUCCO SYSTEM ON WOOD SHEATHING ON 6" STUDS @ 16" O.C.
- K18 FIBER CEMENT BOARD SOFFIT ON 7/8" HAT CHANNELS ATTACHED TO 'C' CHANNEL SYSTEM
- K19 STUCCO SYSTEM SOFFIT ON WOOD SHEATHING ON 'C' CHANNEL SYSTEM
- K20 CONTINUOUS METAL DRIP EDGE
- K21 ROOF CRICKET
- K22 CONCRETE WALL - SEE STRUCTURAL
- K23 LIGHT FIXTURE - SEE ELECTRICAL
- K24 ROOF DRAIN SCUPPER & OVERFLOW, WHERE OCCURS
- K25 BIRD CONTROL DEVICE ALL AROUND SPACED @ 4" O.C.E.W AND CENTERED ON LEDGE
- K26 ROOF EXPANSION JOINT
- K27 CONTINUOUS SEALANT
- K28 CEILING EXPANSION JOINT
- K29 DOOR & FRAME AS SCHEDULED
- K30 METAL DECK - SEE STRUCTURAL (PAINT EXPOSED)
- K31 SHADESCREEN
- K32 CONTINUOUS SEALANT
- K33 WRAP TPO MEMBRANE UP 4" ALONG VERTICAL WALL AND FULLY ADHERE TO WALL USING TPO MEMBRANE ADHESIVE - LOW VOC OR SOLVENT BASED
- K34 VENTILATION SCREEN / INSECT SCREEN
- K35 RUN MEMBRANE UP BETWEEN SUBGIRT & SHEATHING
- K36 ELASTOMERIC EXPANSION JOINT
- K37 5/8" FIBER CEMENT BOARD ON 7/8" SUBGIRT ON 1/2" PLYWOOD SHEATHING ON 8" CMU
- K38 8" CMU - PAINT INTERIOR
- K39 FLASHING & COUNTERFLASHING W/GROMMETED FASTENERS
- K40 EXPAND-O-FLASH W/ INTEGRAL FLANGE
- K41 FLASHING & COUNTERFLASHING
- K42 TRANSFER CENTER ROOF & PARAPET WALL
- K43 INTEGRAL VAPOR BARRIER & INSULATED CORE
- K44 STEEL ANGLE
- K45 2" AIR SPACE
- K46 METAL STUD WALL - REF. TRANSFER CENTER SHEETS
- K47 CONT. PROFILED INSULATION
- K48 STEEL LINTEL

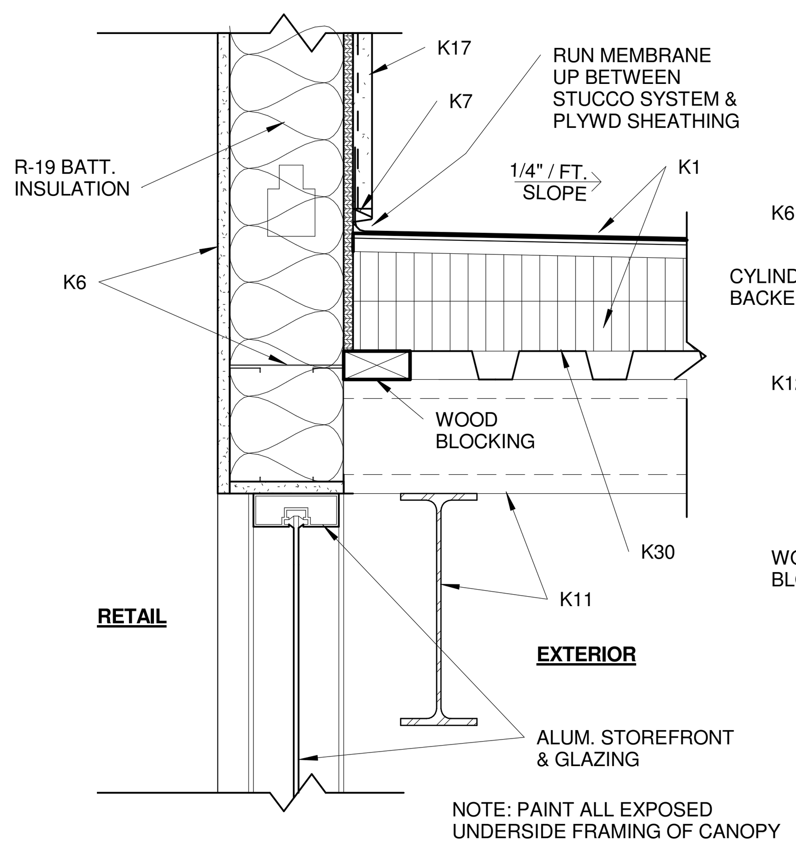

6 COVERED CANOPY @ STOREFRONT
1 1/2" = 1'-0"

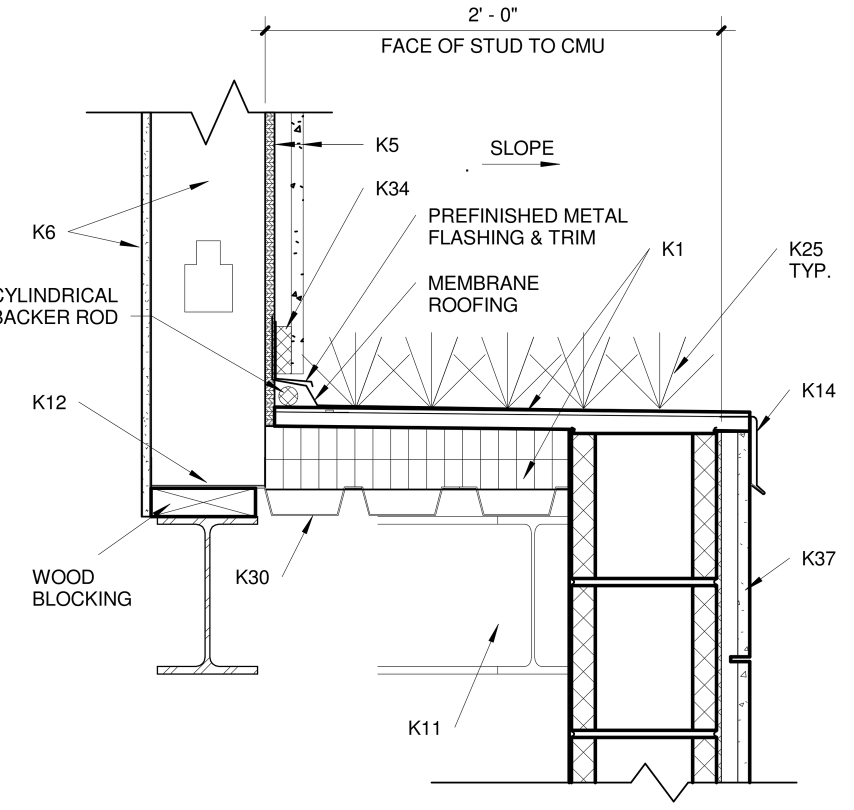

7 TOWER LEDGE DETAIL
1 1/2" = 1'-0"

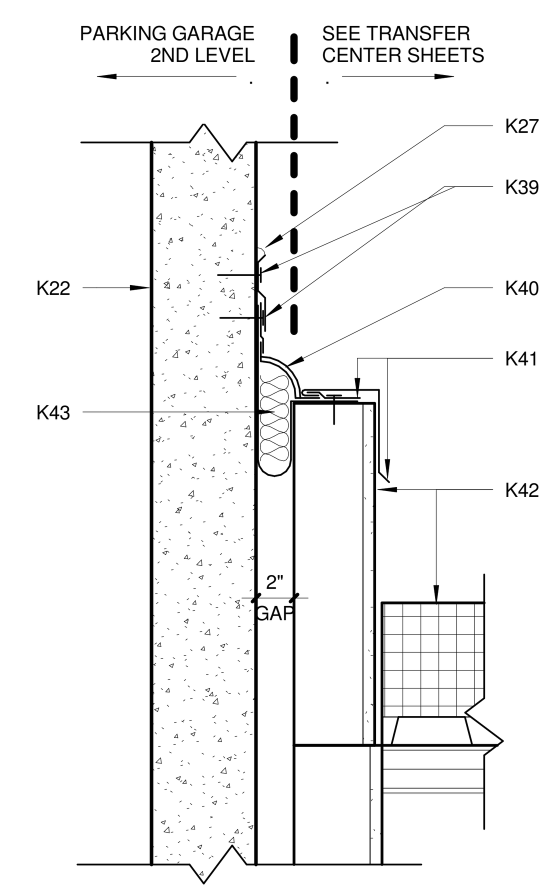

8 EXPANSION JOINT COVER @ GARAGE & TRANSFER CENTER ROOF
1 1/2" = 1'-0"

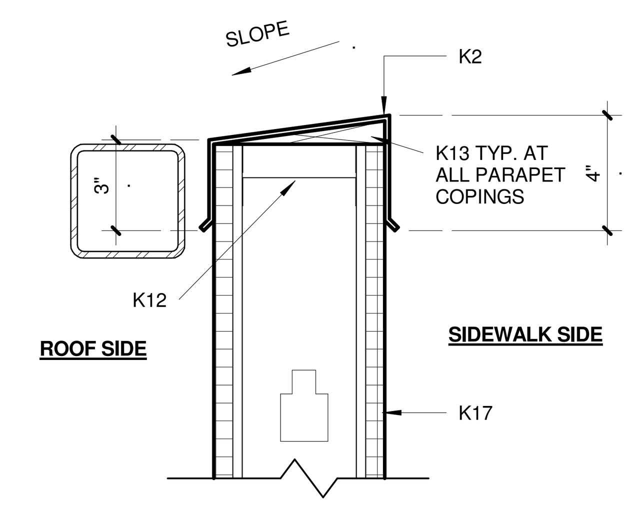

9 PARAPET COPING @ STUCCO
1 1/2" = 1'-0"

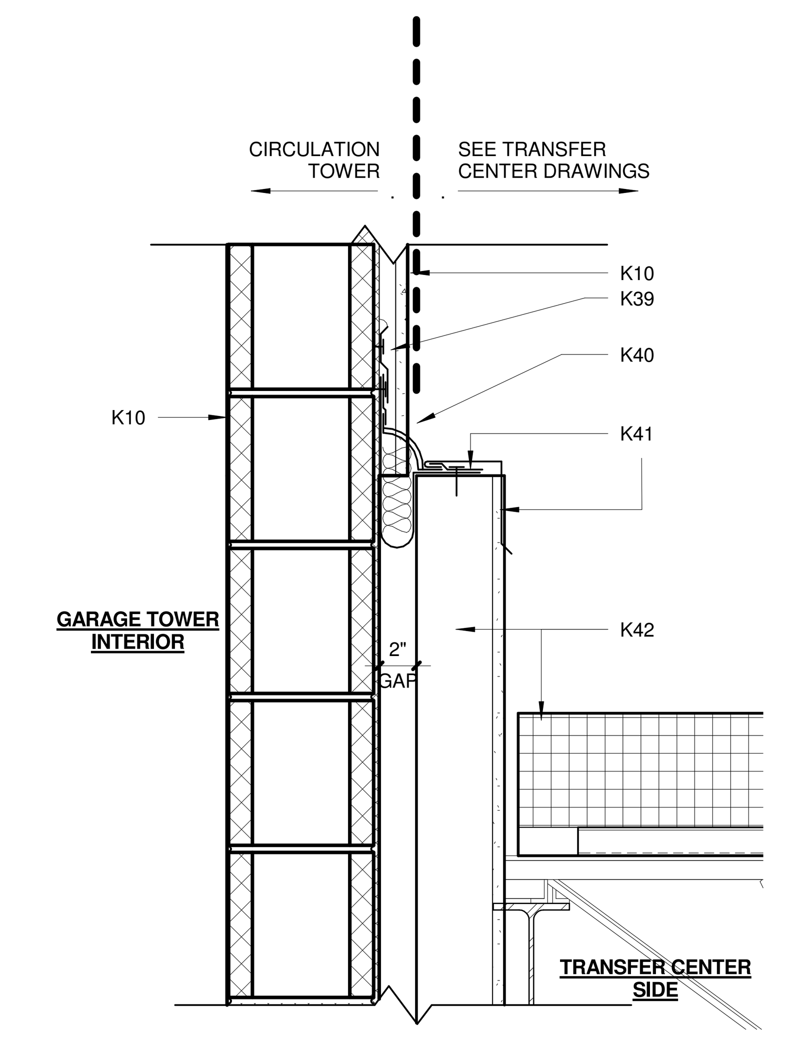

14 EXPANSION JOINT COVER @ TOWER & TRANSFER CTR.
1 1/2" = 1'-0"

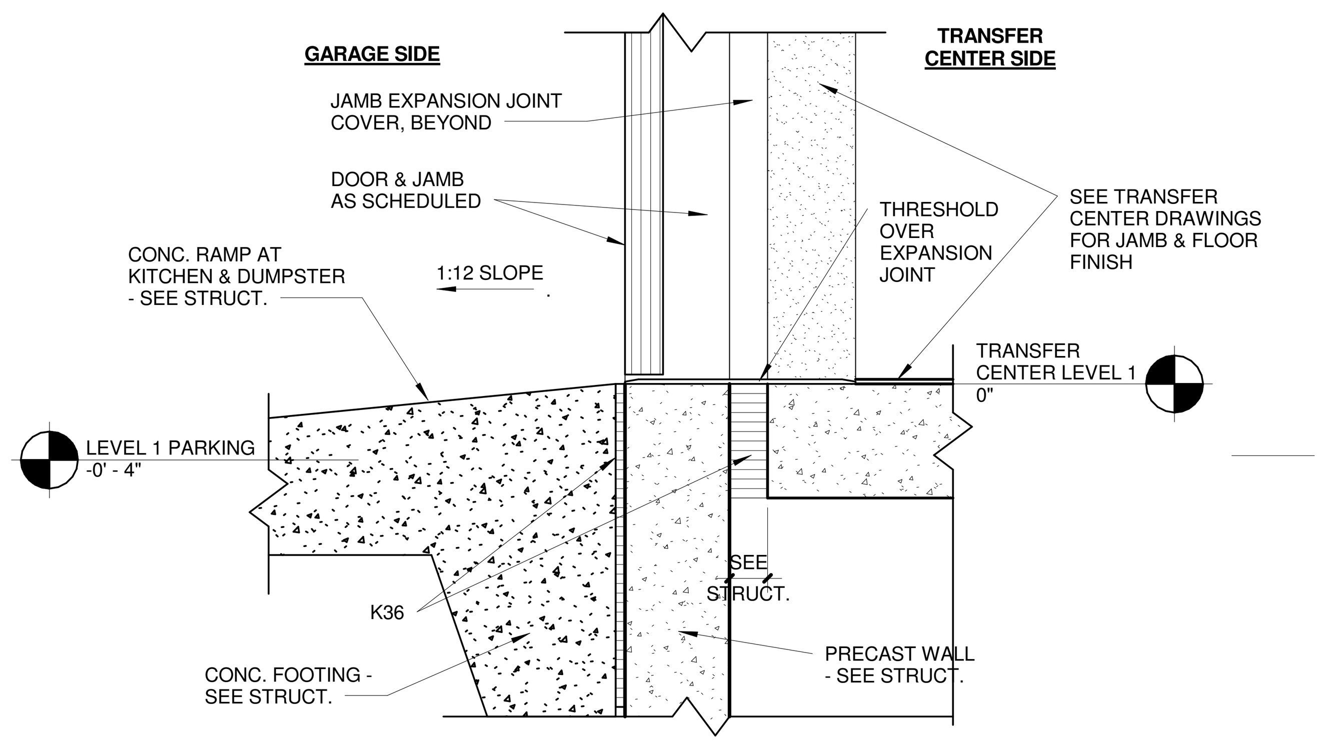

10 EXPANSION JOINT @ DOOR SILL GARAGE / TRANSFER CTR.
1 1/2" = 1'-0"

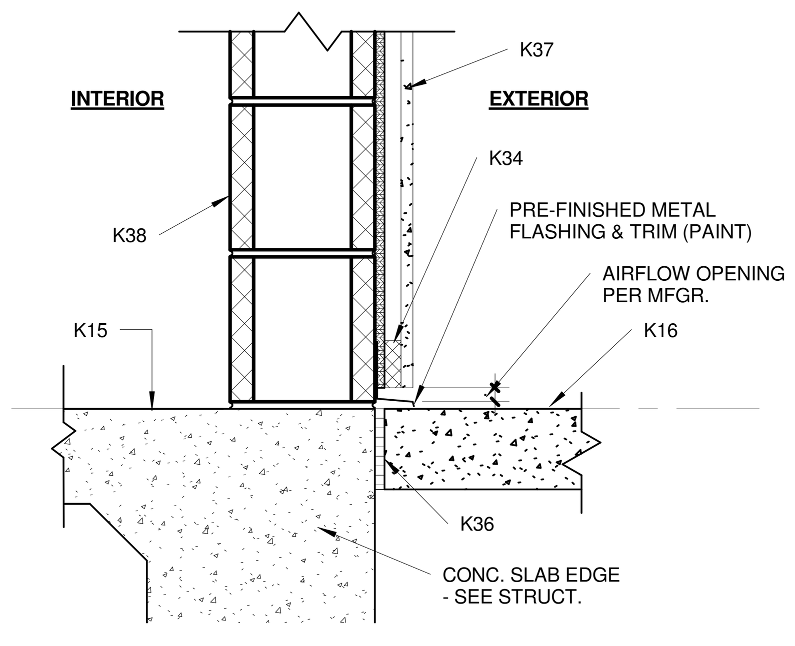

11 FIBER CEMENT BOARD ON CMU SILL
1 1/2" = 1'-0"

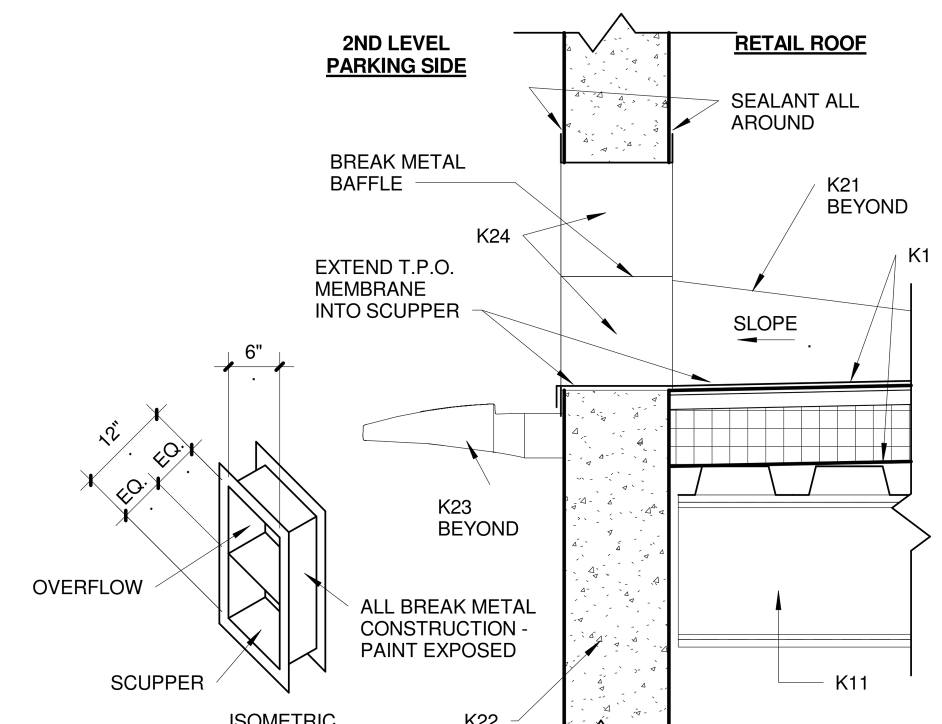

18 SCUPPER & OVERFLOW DETAIL
1 1/2" = 1'-0"

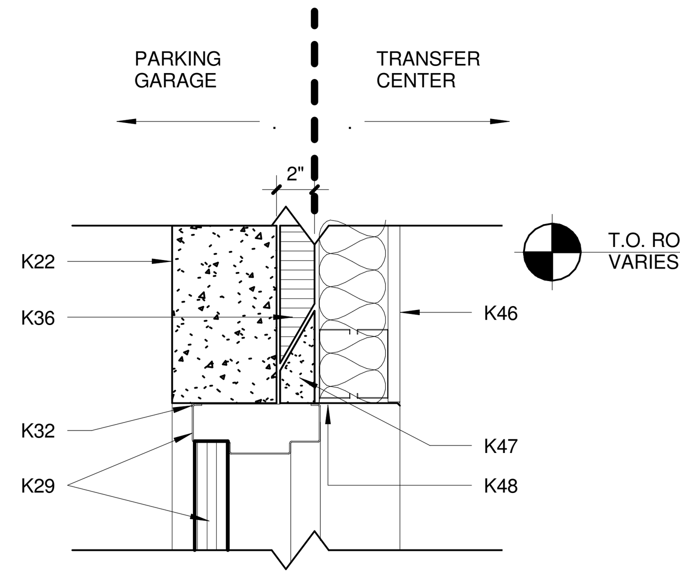

15 EXPANSION JOINT @ DOOR HEAD
1 1/2" = 1'-0"

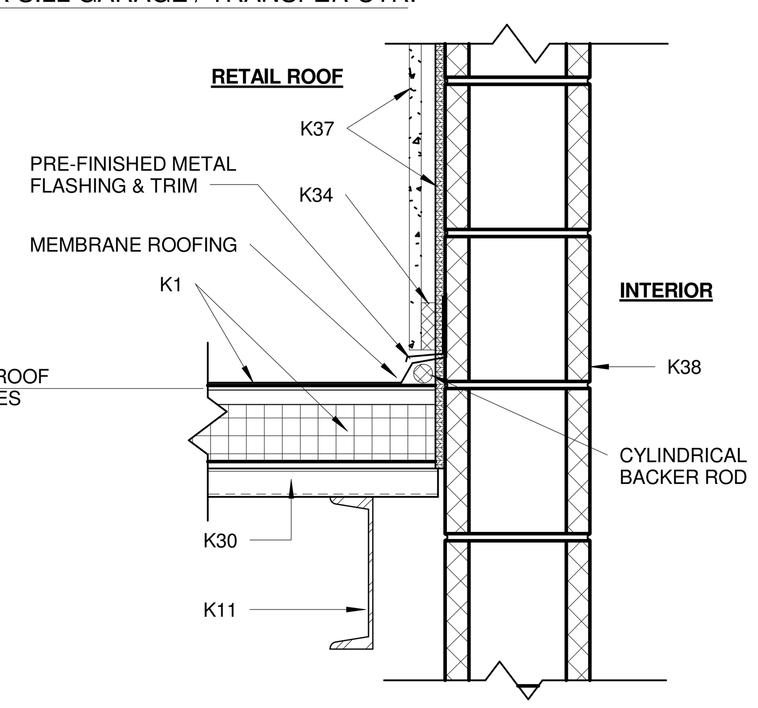

16 FIBER CEMENT CMU @ RETAIL ROOF
1 1/2" = 1'-0"

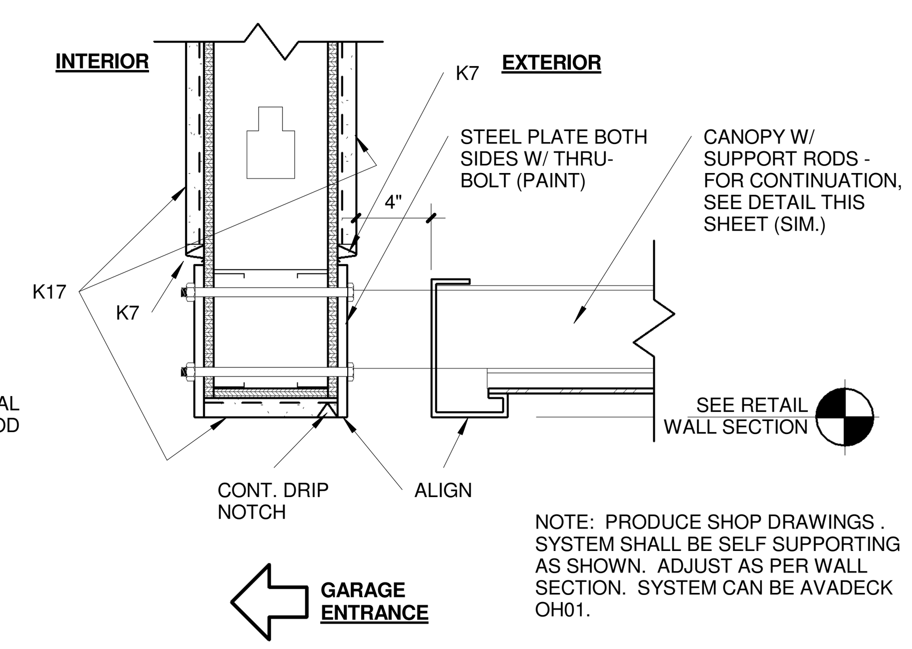

17 HEAD @ GARAGE CANOPY W/ SUPPORT RODS
1 1/2" = 1'-0"

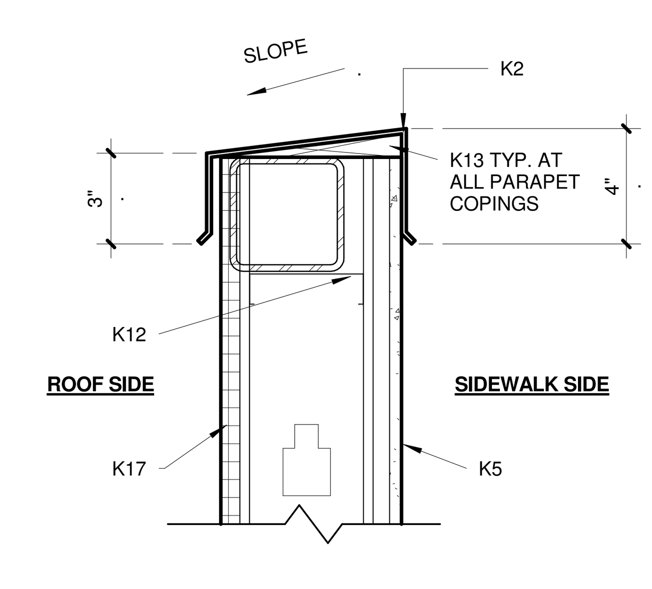

19 PARAPET COPING @ FIBERCEMENT BRD. & STUCCO
1 1/2" = 1'-0"

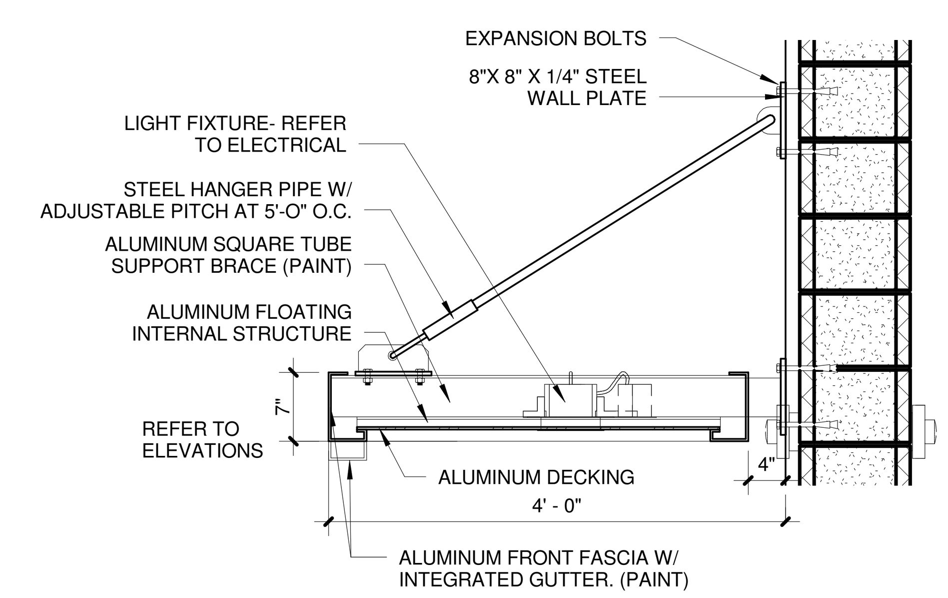

20 CANOPY W/ SUPPORT RODS
3/4" = 1'-0"

100% CONSTRUCTION DOCUMENTS

exIGO ARCHITECTURE INSPIRED BY PURPOSE

REFERENCES -- BENCHMARKS

No.	DATE	REVISIONS	BY

ARCHITECT'S SEAL: REGISTERED ARCHITECT EUGENIO MEDINA 12937 STATE OF TEXAS — 03/03/2016

SCALE HOR:	SHOWN
VER:	SHOWN
DATE:	03/03/16
DESIGN BY	Designer
DRAWN BY	Author
CHKD. BY	Checker
APPD. BY	Approver

PROJECT NAME

NORTHGATE TRANSFER CENTER

EL PASO, TEXAS.

CITY OF EL PASO

CAPITAL IMPROVEMENT DEPARTMENT

THE CITY OF EL PASO TEXAS

SHEET TITLE

MISCELLANEOUS DETAILS

SHEET

AG900

1 HANDICAP PARKING SIGNAGE
N.T.S.
VEHICULAR ROUTE
WHEEL STOP
PARKING SIGN
ACCESSSIBLE ROUTE
1. SURFACE SLOPE AT ACCESIBLE PARKING IS LIMITED TO 2% MAX IN ANY DIRECTION
2. SEE 21/AG903 AND 22/AG903 FOR NUMBER AND LOCATION OF PARKING AISLES, SIGNAGE, WHEELSTOPS, ETC
2 HANDICAP SIGNAGE
1/2" = 1'-0"
WHITE PAINT
BLUE PAINT
3 STREET SIGNAGE
1/2" = 1'-0"
WHITE PAINT
4 HANDICAP SIGNAGE
1" = 1'-0"
HANDICAPPED PARKING ONLY
ALUM. SIGN- WALL MOUNTED
BLUE
WHITE
5'- 0" A.F.F.
5 HANDICAP SIGNAGE (VAN)
1" = 1'-0"
VAN ACCESSIBLE HANDICAPPED PARKING ONLY
6 CARPOOL SIGNAGE
1" = 1'-0"
CARPOOL
7 ELECTRIC CAR SIGNAGE
1" = 1'-0"
ELECTRIC VEHICLE PARKING ONLY
8 NO PARKING SIGNAGE
1" = 1'-0"
NO PARKING ANY TIME
RED
9 SERVICE & DELIVERY SIGN
1" = 1'-0"
NO PARKING SERVICE AND DELIVERY AREA
10 ELEVATOR SIGN
1 1/2" = 1'-0"
ELEVATOR
BRAILLE
4'- 0" A.F.F.
11 STAIRS SIGN
1 1/2" = 1'-0"
STAIRS
12 BICYCLE STORAGE SIGN
1 1/2" = 1'-0"
STORAGE
13 TOOL ROOM SIGN
1 1/2" = 1'-0"
TOOL ROOM
14 CLEARANCE SIGN
1/2" = 1'-0"
STEEL HANGER
12'- 0" CLEARANCE 12'-0"
6" BLACK FONT
8" DIA. CAPPED PVC PIPE- PAINT YELLOW
12'- 0" A.F.F.
FRONT VIEW
EXIT TO MAIN STREET
BACK VIEW AT MAIN STREEN EXIT
EXIT
BACK VIEW AT PROPOSED DRIVEWAY
15 EXIT SIGN
1/2" = 1'-0"
U.V. FLATBED DIRECT PRINT ON SINGLE SIDED SUSPENDED ALUMINUM PANEL (CO-SIGN MODULAR SIGN SYSTEM)
6" GRAY FONT
16 EXIT SIGN
1/2" = 1'-0"
17 RAMP SIGN
1/2" = 1'-0"
RAMP
U.V. FLATBED DIRECT PRINT ON ALUMINUM PANEL
18 WRONG WAY SIGN
1/2" = 1'-0"
WRONG WAY
6" WHITE FONT
19 LEVEL 1 SIGNAGE
3/4" = 1'-0"
TRANSFER CENTER MAIN STREET
LEVEL 01
U.V. FLATBED DIRECT PRINT ON SINGLE SIDED (CO-SIGN MODULAR SIGN SYSTEM) ALUMINUM PANEL
WHITE-PAINT
BLUE- PAINT
DARK GRAY- PAINT
4'- 0" A.F.F.
20 LEVEL 1- SIGNAGE
3/4" = 1'-0"
21 LEVEL 2 SIGNAGE
3/4" = 1'-0"
LEVEL 02
22 LEVEL 2- SIGNAGE
3/4" = 1'-0"
23 LEVEL 2 PARKING- SIGNAGE LOCATION
1" = 30'-0"
24 LEVEL 1 PARKING- SIGNAGE LOCATION
1" = 30'-0"
8 ELECTRIC CARS
CAR-POOLED DESIGNATED PARKING
exigo
ARCHITECTURE INSPIRED BY PURPOSE
100% CONSTRUCTION DOCUMENTS
REFERENCES -- BENCHMARKS
ARCHITECTS SEAL
03/03/2016
PROJECT NAME
NORTHGATE TRANSFER CENTER
EL PASO, TEXAS.
CITY OF EL PASO
CAPITAL IMPROVEMENT DEPARTMENT
SHEET TITLE
SIGNAGE
SHEET
AG901

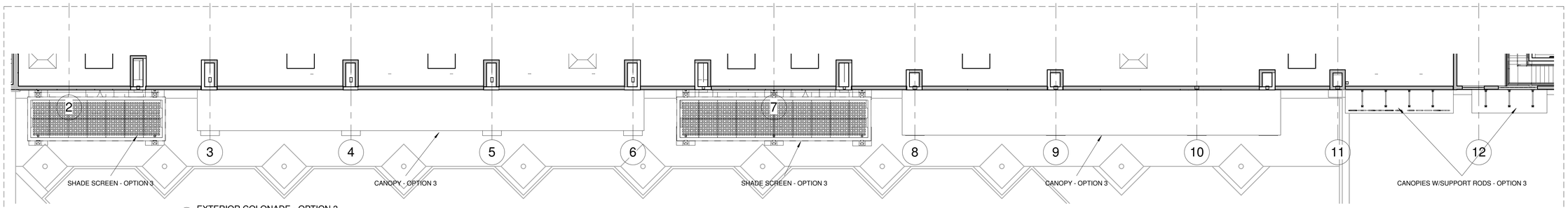

1 EXTERIOR COLONADE - OPTION 3
3/32" = 1'-0"

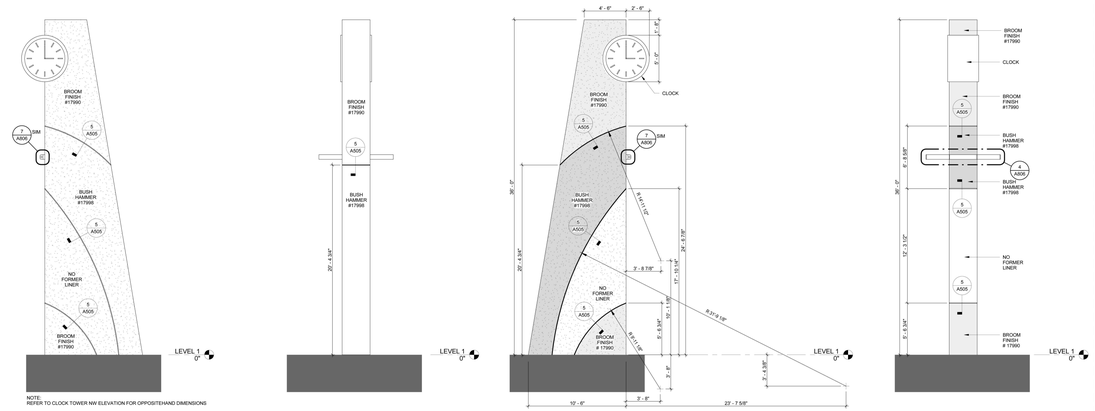

1 CLOCK TOWER SE ELEVATION
1/4" = 1'-0"

2 CLOCK TOWER NE ELEVATION
1/4" = 1'-0"

3 CLOCK TOWER NW ELEVATION
1/4" = 1'-0"

4 CLOCK TOWER SW ELEVATION
1/4" = 1'-0"

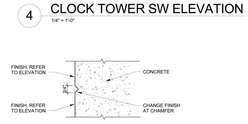

3 CLOCK SPIER OPTION 4
1 1/2" = 1'-0"

5 CHAMFER DETAIL
3" = 1'-0"

SHADE STRUCTURES NOTES

1. THE TEFLON SHADE CANOPIES ARE BEING SHOWN FOR REFERENCE AND DESIGN INTENT ONLY. THE DETAILED DESIGN AND ENGINEERING WILL BE DONE BY A SELECTED MANUFACTURER. THE SHADE CANOPIES WILL BE PERMITTED SEPARATELY AS A DEFERRED SUBMITTAL.

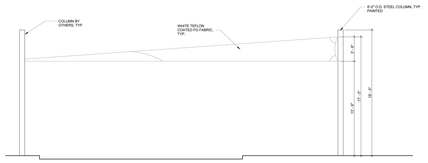

3 SHADE STRUCTURE - BUS BERTH ELEVATION (LOOKING NORTH)
1/4" = 1'-0"

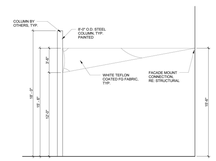

4 SHADE STRUCTURE - BUS BERTH SOUTH BAY ELEVATION (LOOKING EAST)
1/4" = 1'-0"

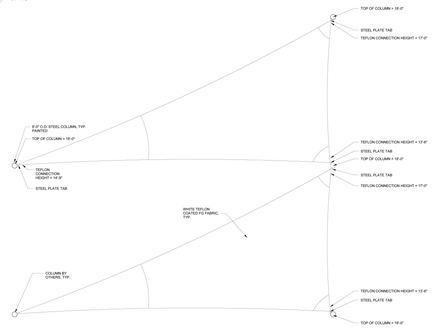

1 SHADE STRUCTURE - BUS BERTH
1/4" = 1'-0"

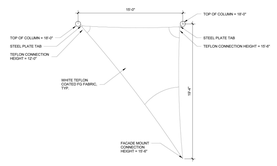

2 SHADE STRUCTURE - BUS BERTH SOUTH BAY
1/4" = 1'-0"

4 EXTERIOR TENSILE SHADE SCREEN STRUCTURES OPTION 1
3/32" = 1'-0"

SHADE STRUCTURES NOTES

1. THE TEFLON SHADE CANOPIES ARE BEING SHOWN FOR REFERENCE AND DESIGN INTENT ONLY. THE DETAILED DESIGN AND ENGINEERING WILL BE DONE BY A SELECTED MANUFACTURER. THE SHADE CANOPIES WILL BE PERMITTED SEPARATELY AS A DEFERRED SUBMITTAL.

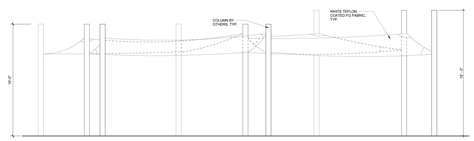

3 SHADE STRUCTURE - LARGE ELEVATION (LOOKING SOUTH)
1/4" = 1'-0"

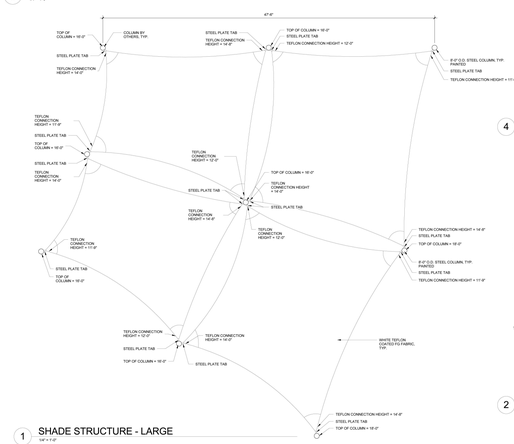

1 SHADE STRUCTURE - LARGE
1/4" = 1'-0"

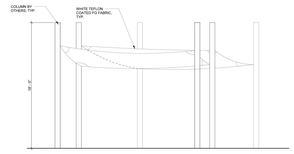

4 SHADE STRUCTURE - SMALL ELEVATION (LOOKING EAST)
1/4" = 1'-0"

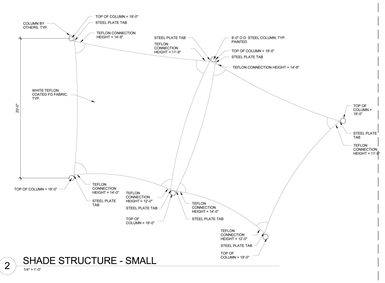

2 SHADE STRUCTURE - SMALL
1/4" = 1'-0"

OPTION 2

ALUMINUM DECORATIVE SCREENS: ALUMINUM EXTERIOR SCREENS AS TO THE WEST AND SOUTH SIDE OF GARAGE AND RETAIL BUILDING REFER TO SHEET AG402

100% CONSTRUCTION DOCUMENTS

exigo ARCHITECTURE INSPIRED BY PURPOSE

REFERENCES — BENCHMARKS

No.	DATE	REVISIONS	BY

ARCHITECT'S SEAL

REGISTERED ARCHITECT — CRAIG A. MAGUIRE — 12937 — STATE OF TEXAS

03/03/2016

SCALE
HOR: SHOWN
VER: SHOWN

DATE 03/03/15
DESIGN BY Designer
DRAWN BY Author
CHKD BY Checker
APPD BY Approver

PROJECT NAME

NORTHGATE TRANSFER CENTER

EL PASO, TEXAS.

CITY OF EL PASO
CAPITAL IMPROVEMENT DEPARTMENT

SHEET TITLE

OPTIONS SHEET

SHEET
AG1000

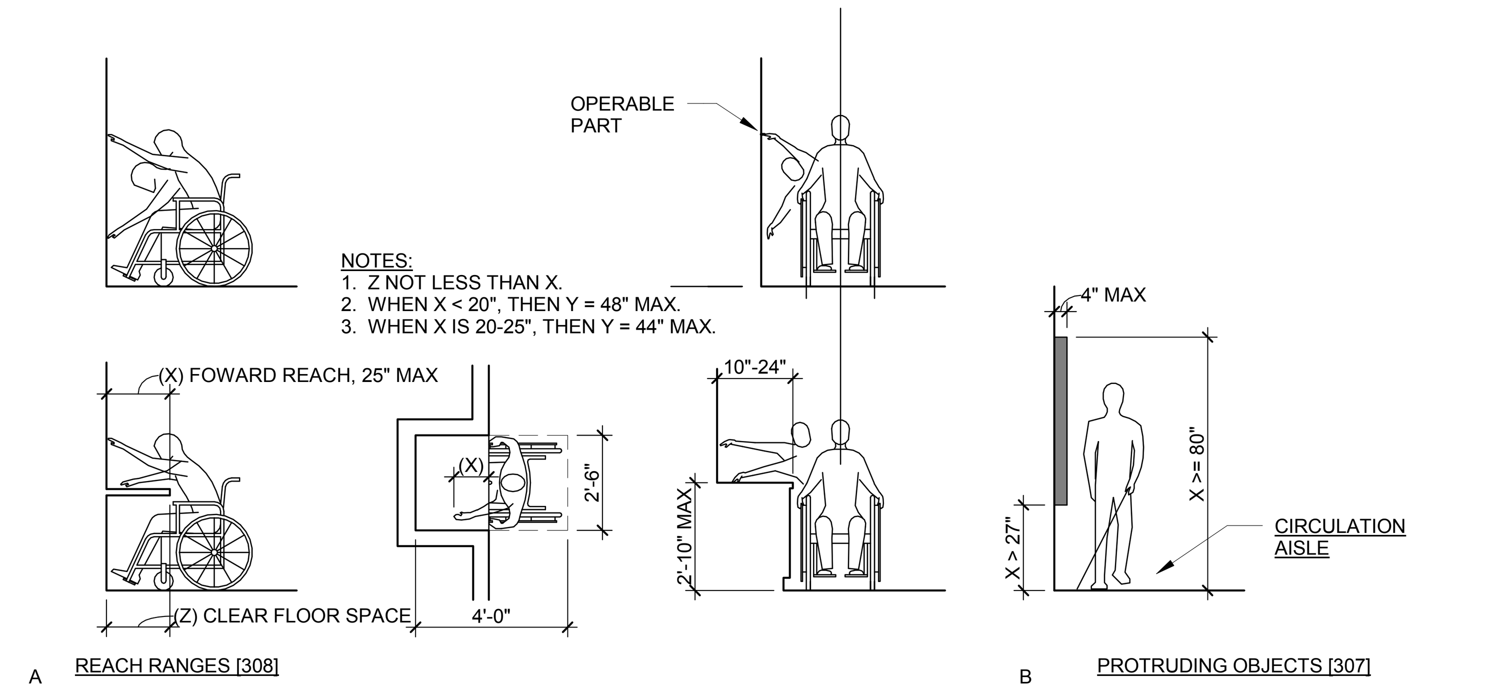

4 REACH RANGES AND PROTRUDING OBJECTS

1/4" = 1'-0"

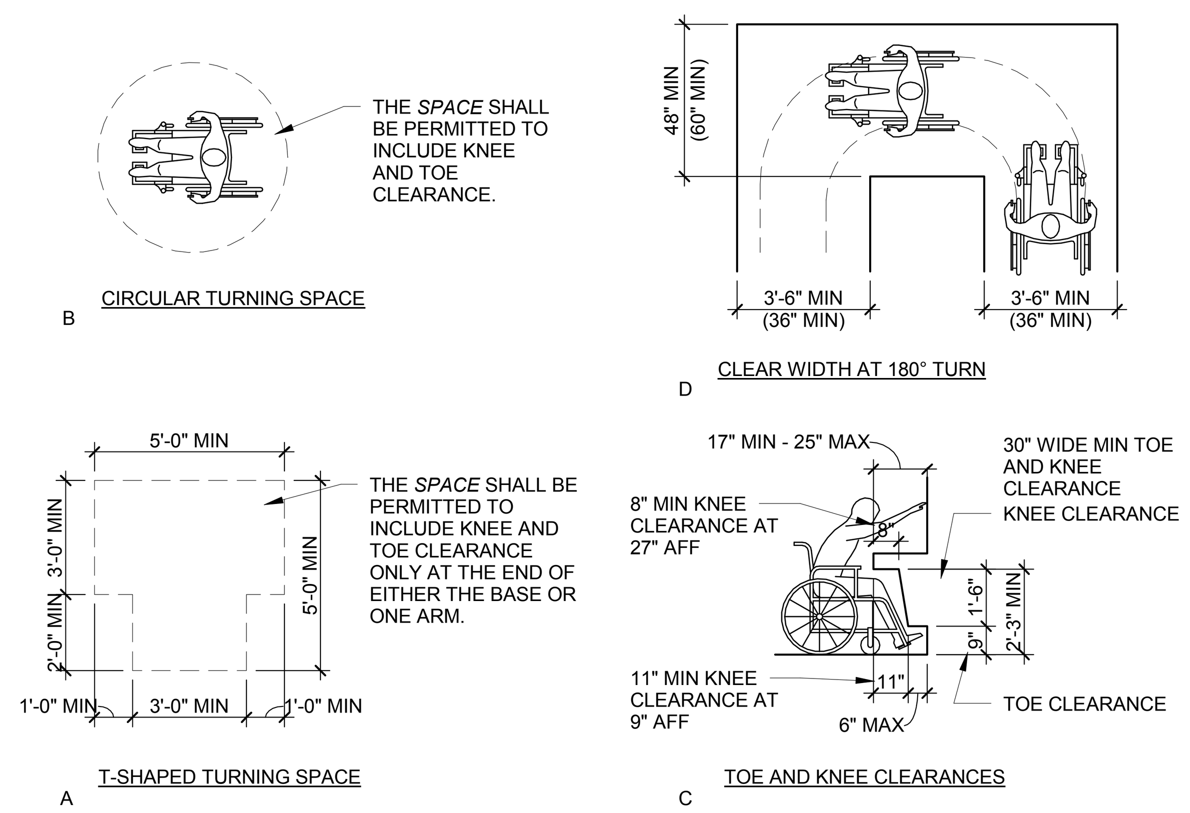

3 WHEEL CHAIR TURNING SPACE AND TOE AND KNEE CLEARANCES

1/4" = 1'-0"

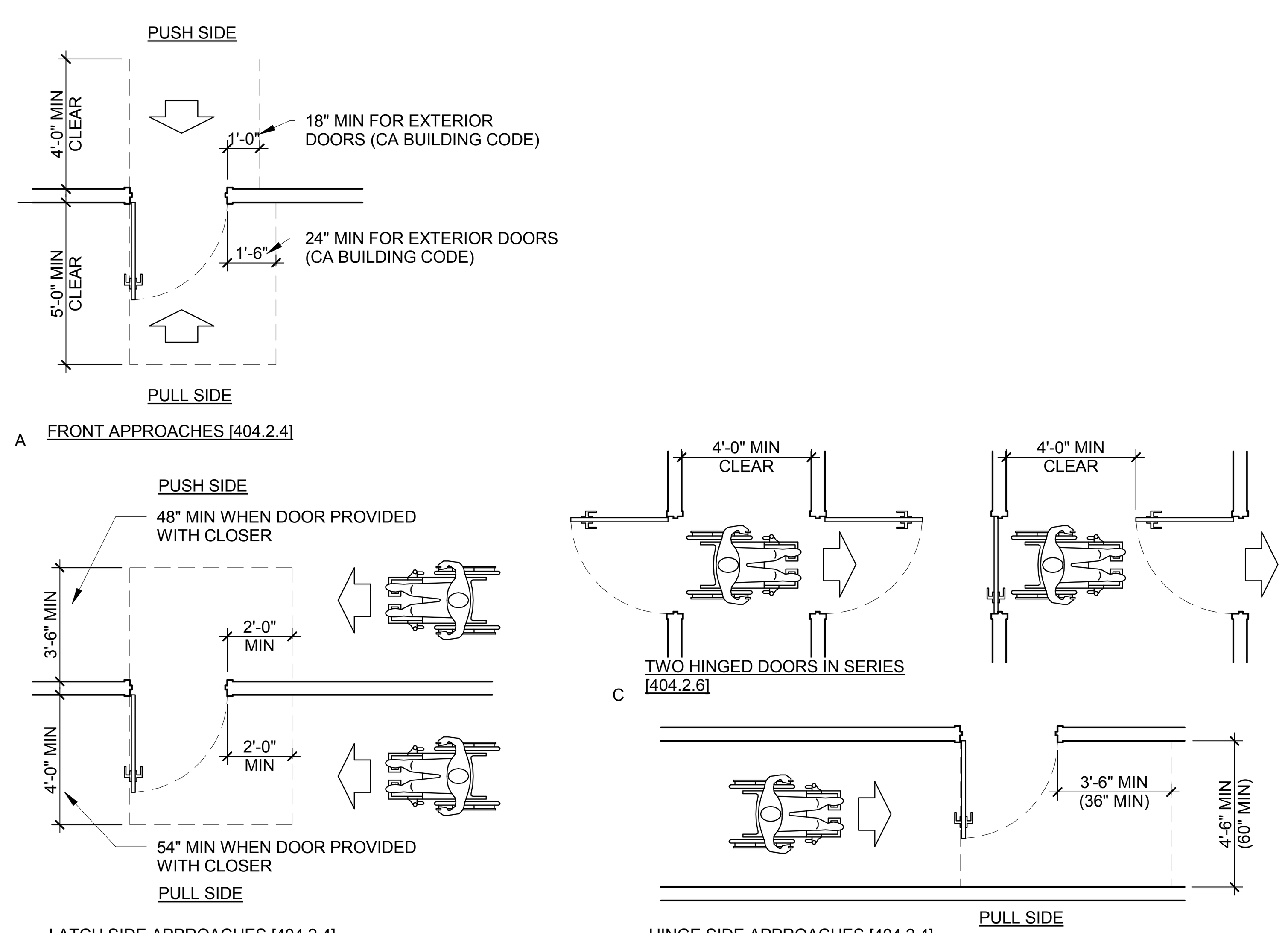

1 FLOOR CLEARANCE

1/4" = 1'-0"

Legend Title

216 SIGNS (SCOPING REQUIREMENTS)
216.2 DESIGNATIONS. INTERIOR AND EXTERIOR SIGNS IDENTIFYING PERMANENT ROOMS AND SPACES SHALL COMPLY WITH 703.1 (GENERAL), 703.2 (RAISED CHARACTERS), AND 703.5 (VISUAL CHARACTERS). WHERE PICTOGRAMS ARE PROVIDED AS DESIGNATIONS OF PERMANENT INTERIOR ROOMS AND SPACES, THE PICTOGRAMS SHALL COMPLY WITH 703.6 AND SHALL HAVE TEXT DESCRIPTORS COMPLYING WITH 703.2 (RAISED CHARACTERS) AND 703.5 (VISUAL CHARACTERS).
EXCEPTION: EXTERIOR SIGNS THAT ARE NOT LOCATED AT THE DOOR TO THE SPACE THEY SERVE SHALL NOT BE REQUIRED TO COMPLY WITH 703.2.

[ADVISORY 216.2 SECTION 216.2 APPLIES TO SIGNS THAT PROVIDE DESIGNATIONS, LABELS, OR NAMES FOR INTERIOR ROOMS OR SPACES WHERE THE SIGN IS NOT LIKELY TO CHANGE OVER TIME. EXAMPLES INCLUDE INTERIOR SIGNS LABELING RESTROOMS, ROOM AND FLOOR NUMBERS OR LETTERS, AND ROOM NAMES.]

216.3 DIRECTIONAL AND INFORMATIONAL SIGNS. SIGNS THAT PROVIDE DIRECTION TO OR INFORMATION ABOUT INTERIOR SPACES AND FACILITIES OF THE SITE SHALL COMPLY WITH 703.5 (VISUAL CHARACTERS).

[ADVISORY 216.3 DIRECTIONAL AND INFORMATIONAL SIGNS. INFORMATION ABOUT INTERIOR SPACES AND FACILITIES INCLUDES RULES OF CONDUCT, OCCUPANT LOAD, AND SIMILAR SIGNS. SIGNS PROVIDING DIRECTION TO ROOMS OR SPACES INCLUDE THOSE THAT IDENTIFY EGRESS ROUTES.]

216.4 MEANS OF EGRESS
216.4.1 EXIT DOORS. DOORS AT EXIT PASSAGEWAYS, EXIT DISCHARGE, AND EXIT STAIRWAYS SHALL BE IDENTIFIED BY TACTILE SIGNS COMPLYING WITH 703.1 (GENERAL), 703.2 (RAISED CHARACTERS), AND 703.5 (VISUAL CHARACTERS).

216.4.2 AREAS OF REFUGE. SIGNS TO PROVIDE INSTRUCTIONS IN AREAS OF REFUGE SHALL COMPLY WITH 703.5 (VISUAL CHARACTERS).

216.4.3 DIRECTIONAL SIGNS. SIGNS TO PROVIDE DIRECTIONS TO ACCESSIBLE MEANS OF EGRESS SHALL COMPLY WITH 703.5 (VISUAL CHARACTERS).

216.5 PARKING. ACCESSIBLE PARKING SPACES SHALL BE IDENTIFIED BY SIGNS. PARKING SPACE IDENTIFICATION SIGNS SHALL INCLUDE THE INTERNATIONAL SYMBOL OF ACCESSIBILITY. SIGNS IDENTIFYING VAN PARKING SPACES SHALL CONTAIN THE DESIGNATION "VAN ACCESSIBLE". SIGNS SHALL BE 60 INCHES MINIMUM ABOVE THE FINISH FLOOR OR GROUND SURFACE MEASURED TO THE BOTTOM OF THE SIGN.

216.6 ENTRANCES. WHERE NOT ALL ENTRANCES COMPLY WITH 404, ENTRANCES COMPLYING WITH 404 SHALL BE IDENTIFIED BY THE INTERNATIONAL SYMBOL OF ACCESSIBILITY. DIRECTIONAL SIGNS COMPLYING WITH 703.5 (VISUAL CHARACTERS) THAT INDICATE THE LOCATION OF THE NEAREST ENTRANCE COMPLYING WITH 404 SHALL BE PROVIDED AT ENTRANCES THAT DO NOT COMPLY WITH 404.
404. DOORS, DOORWAYS, AND GATES THAT ARE PART OF AN ACCESSIBLE ROUTE.

216.7 ELEVATORS. WHERE EXISTING ELEVATORS DO NOT COMPLY WITH 407, ELEVATORS THAT DO COMPLY WITH 407 SHALL BE CLEARLY IDENTIFIED WITH THE INTERNATIONAL SYMBOL OF ACCESSIBILITY.

216.8 TOILET ROOMS AND BATHING ROOMS. WHERE EXISTING TOILET OR BATHING ROOMS ARE NOT ACCESSIBLE, DIRECTIONAL SIGNAGE INDICATING THE LOCATION OF THE NEAREST TOILET ROOM OR BATHING ROOM COMPLYING WITH 603 WITHIN THE FACILITY SHALL BE PROVIDED. SIGNS SHALL COMPLY WITH 703.5 (VISUAL CHARACTERS) AND SHALL INCLUDE THE INTERNATIONAL SYMBOL OF ACCESSIBILITY.

703 SIGNS (TECHNICAL REQUIREMENTS)
703.1 GENERAL. SIGNS SHALL COMPLY WITH 703. WHERE BOTH VISUAL AND TACTILE CHARACTERS ARE REQUIRED, EITHER ONE SIGN WITH BOTH VISUAL AND TACTILE CHARACTERS, OR TWO SEPARATE SIGNS, ONE WITH VISUAL, AND ONE WITH TACTILE CHARACTERS, SHALL BE PROVIDED.

703.2 RAISED CHARACTERS. RAISED CHARACTERS SHALL COMPLY WITH 703.2 AND SHALL BE DUPLICATED IN BRAILLE COMPLYING WITH 703.3. RAISED CHARACTERS SHALL BE INSTALLED IN ACCORDANCE WITH 703.4.

703.3 BRAILLE. BRAILLE SHALL BE CONTRACTED (GRADE 2) AND SHALL COMPLY WITH 703.3 AND 703.4.

703.4 INSTALLATION HEIGHT AND LOCATION. SIGNS WITH TACTILE CHARACTERS SHALL COMPLY WITH 703.4.
703.4.1 HEIGHT ABOVE FINISH FLOOR OR GROUND. TACTILE CHARACTERS ON SIGNS SHALL BE LOCATED 48 INCHES MINIMUM ABOVE THE FINISH FLOOR OR GROUND SURFACE, MEASURED FROM THE BASELINE OF THE LOWEST TACTILE CHARACTER AND 60 INCHES (1525 MM) MAXIMUM ABOVE THE FINISH FLOOR OR GROUND SURFACE, MEASURED FROM THE BASELINE OF THE HIGHEST TACTILE CHARACTER.
EXCEPTION: TACTILE CHARACTERS FOR ELEVATOR CAR CONTROLS SHALL NOT BE REQUIRED TO COMPLY WITH 703.4.1.
703.4.2 LOCATION. WHERE A TACTILE SIGN IS PROVIDED AT A DOOR, THE SIGN SHALL BE LOCATED ALONGSIDE THE DOOR AT THE LATCH SIDE.

703.6 PICTOGRAMS
703.6.1 PICTOGRAM FIELD. PICTOGRAMS SHALL HAVE A FIELD HEIGHT OF 6 INCHES (150 MM) MINIMUM. CHARACTERS AND BRAILLE SHALL NOT BE LOCATED IN THE PICTOGRAM FIELD.
703.6.3 TEXT DESCRIPTORS. PICTOGRAMS SHALL HAVE TEXT DESCRIPTORS LOCATED DIRECTLY BELOW THE PICTOGRAM FIELD. TEXT DESCRIPTORS SHALL COMPLY WITH 703.2 (RAISED CHARACTERS), 703.3 (AND 703.4 (INSTALLATION HEIGHT AND LOCATION).

703.7 SYMBOLS OF ACCESSIBILITY. SYMBOLS OF ACCESSIBILITY SHALL COMPLY WITH 703.7.
1. INTERNATIONAL SYMBOL OF ACCESSIBILITY
2. INTERNATIONAL SYMBOL OF TTY
3. INTERNATIONAL SYMBOL OF ACCESS FOR HEARING LOSS
4. VOLUME CONTROL TELEPHONE

2 SIGN

3" = 1'-0"

RNL
1050 17th STREET
SUITE A200
DENVER, CO 80265
303 295 1717 t
303 292 0845 f

100% CONSTRUCTION DOCUMENTS

REFERENCES – BENCHMARKS

DATE	REVISIONS	BY

ARCHITECTS SEAL
02/05/2016
100% CONSTRUCTION DOCUMENTS

SCALE
HOR: SHOWN
VER: SHOWN
DATE: 02/05/16
DESIGN BY: Designer
DRAWN BY: Author
CHKD. BY: Checker
APPD. BY: Approver

PROJECT NAME
NORTHGATE TRANSFER CENTER
EL PASO, TEXAS.

CITY OF EL PASO
CAPITAL IMPROVEMENT DEPARTMENT

SHEET TITLE
TYPICAL ADA

SHEET
G002

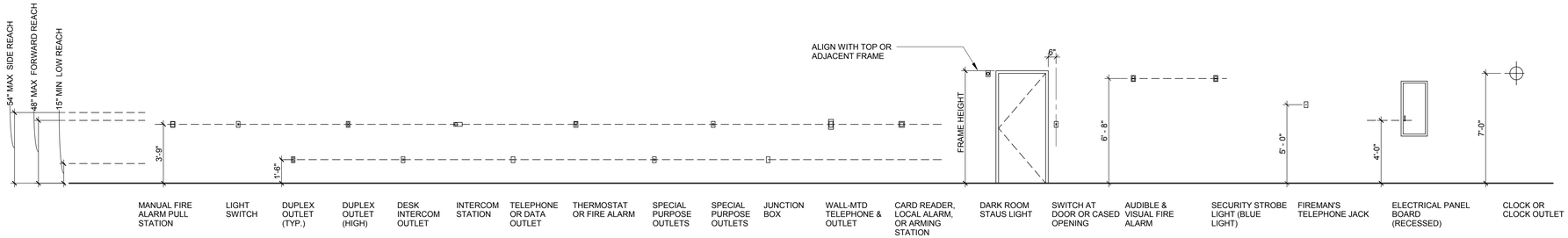

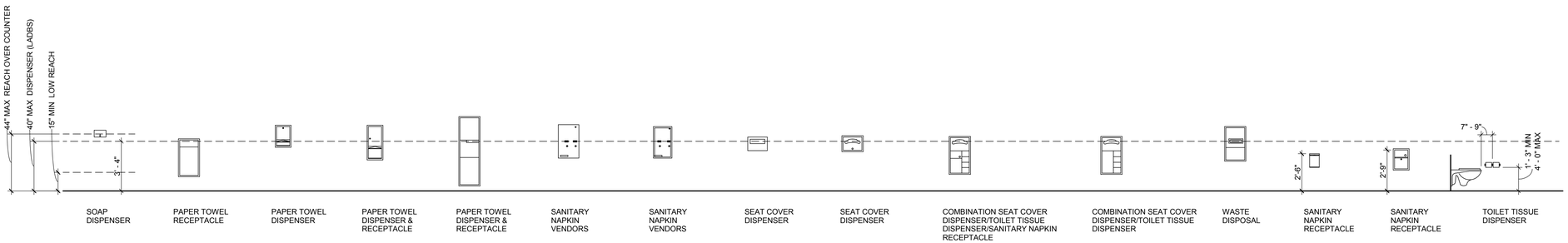

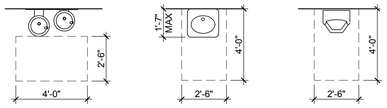

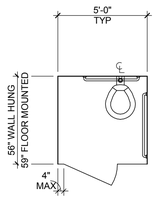

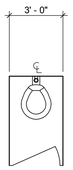

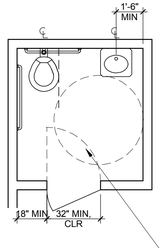

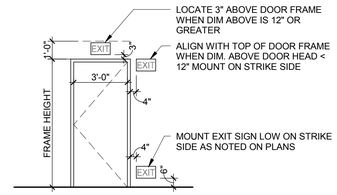

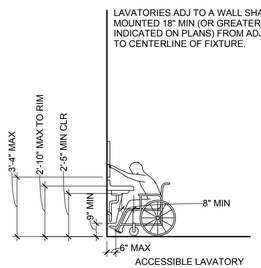

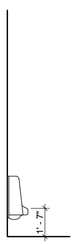

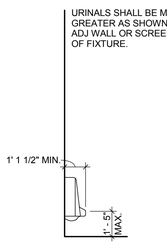

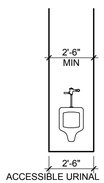

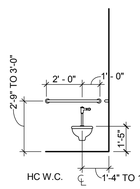

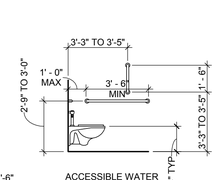

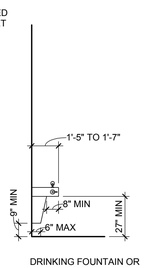

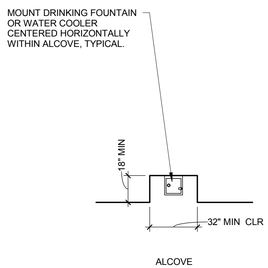

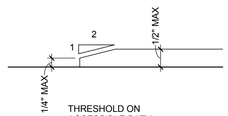

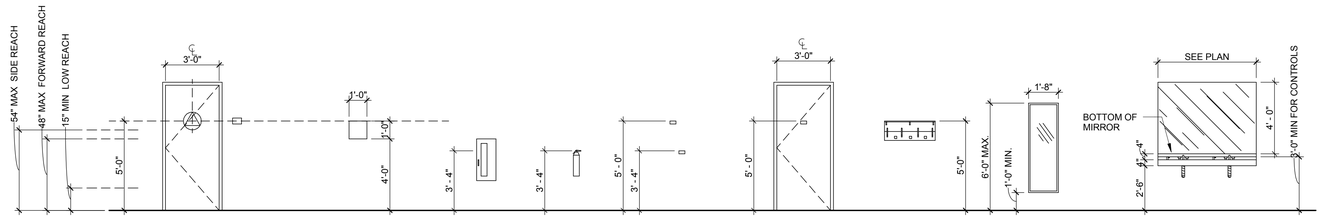

100% CONSTRUCTION DOCUMENTS

RNL
1050 17th STREET
SUITE A200
DENVER, CO 80265
303 295 1717 t
303 292 0845 f

REFERENCES – BENCHMARKS

BY	REVISIONS	DATE

ARCHITECT'S SEAL

REGISTERED ARCHITECT — KIMBERLY ANN MEEKS — 12931 — STATE OF TEXAS

02/05/2016

100% CONSTRUCTION DOCUMENTS

SCALE
HOR: SHOWN
VER: SHOWN

DATE 05/04/16
DESIGN BY Designer
DRAWN BY Author
CHKD BY Checker
APPD BY Approver

PROJECT NAME

NORTHGATE TRANSFER CENTER

EL PASO, TEXAS.

CITY OF EL PASO
CAPITAL IMPROVEMENT DEPARTMENT

SHEET TITLE

TYPICAL FIXTURE MOUNTING HEIGHTS

SHEET
G003

BUILDING CODE DATA - TRANSFER CENTER BUILDING

1.0 GENERAL

1.1 OWNER — CITY OF EL PASO

1.2 SITE ADDRESS — EL PASO, TEXAS

1.3 CODES IN EFFECT
- INTERNATIONAL BUILDING CODE, 2009 EDITION
- INTERNATIONAL PLUMBING CODE, 2009 EDITION
- INTERNATIONAL MECHANICAL CODE, 2009 EDITION
- INTERNATIONAL ENERGY CONSERVATION CODE, 2009 EDITION
- INTERNATIONAL FIRE CODE, 2009 EDITION
- INTERNATIONAL FUEL GAS CODE, 2009 EDITION
- TEXAS ACCESSIBILITY STANDARDS-2010 (ADOPTED IN 2012)
- INTERNATIONAL EXISTING BUILDING CODE, 2009 EDITION

1.4 AUTHORITY HAVING JURISDICTION — CITY OF EL PASO BUILDING DEPARTMENT

2.0 SITE — PROPERTY DESCRIPTION: MULTIPLE BUILDING PROPERTY

2.1 DISTANCE TO LOT LINES

NORTH	68'-6"	TO PROPERTY LINE
SOUTH	0'-0"	TO PROPERTY LINE
EAST	51'-0"	TO PROPERTY LINE
WEST	59'-1"	TO PROPERTY LINE

2.2 PARKING DATA (IBC 1106)

MAIN PARKING

	SPACES	SIZE
ADA-CAR PARKING	SEE PRKG GARAGE ARCH CODE SHEET	x
ADA-VAN PARKING	SEE PRKG GARAGE ARCH CODE SHEET	x
MOTORCYCLE	SEE PRKG GARAGE ARCH CODE SHEET	x
VISITOR	SEE PRKG GARAGE ARCH CODE SHEET	x
STANDARD	SEE PRKG GARAGE ARCH CODE SHEET	x
TOTAL	SEE PRKG GARAGE ARCH CODE SHEET	

(IBC TABLE 1106.1) *Minimum required ADA car parking spaces = ___ (see Parking Garage code sheet)
(IBC 1106.5) *Minimum required ADA van parking spaces = ___ (see Parking Garage code sheet)

3.0 BUILDING

3.1 BUILDING DESCRIPTION
PASSENGER TRANSPORTATION TERMINAL
Unprotected Steel Structure
Fully Sprinklered

3.2 BUILDING USE & OCCUPANCY CLASSIFICATION (IBC 302.1)

USE	GROUP
ASSEMBLY GROUP	A-2, A-3
BUSINESS GROUP	B
STORAGE GROUP	S-1, S-2

3.3 OCCUPANCY SEPARATION (IBC TABLE 508.4)

OCCUPANCY	HOURS
A & S-2	*SEE PARKING GARAGE ARCHITECTURAL CODE SHEET

* There is a fire rated wall at the east wall of the parking garage; there are no fire rated walls within the Transfer Center Building

3.4 TYPE OF CONSTRUCTION (IBC 602)

TYPE	
II-B	UNPROTECTED NONCOMBUSTIBLE

3.5 BUILDING HEIGHT (IBC 504)

	FEET	STORIES
PROPOSED:	32'-1 1/2"	1
ALLOWED:	*75'-0"	*3

*With Sprinkler System

3.6 BUILDING AREA (IBC TABLE 503) (IBC 506)

	GROSS SQ. FT.
PROPOSED:	**8,625.02**
A-2	529.98
A-3	6380.47
B	967
S-1	250.78
S-2	198.65
ALLOWED: (Without Frontage Increase)	**9,500**

3.7 FIRE RESISTANCE RATINGS (IBC TABLE 601)

ELEMENT	MATERIAL	RATING
STRUCTURAL FRAME	NONCOMBUSTIBLE	0 - HR
BEARING WALLS		
- EXTERIOR	NONCOMBUSTIBLE	0 - HR
- INTERIOR	NONCOMBUSTIBLE	0 - HR
NON-BEARING WALLS AND PARTITIONS		
-EXTERIOR	NONCOMBUSTIBLE	SEE 3.8
-INTERIOR	NONCOMBUSTIBLE	0 - HR
FLOOR CONSTRUCTION	NONCOMBUSTIBLE	0 - HR
ROOF CONSTRUCTION	NONCOMBUSTIBLE	0 - HR

3.8 EXTERIOR WALL FIRE RATINGS (IBC TABLE 601 & 602)

FIRE SEPARATION DISTANCE = X (FEET)	TYPE OF CONSTRUCTION	OCCUPANCY: GROUP(S)	HOURS: X (NUM.)
X < 5	II-B	A, B, S-2	1 - HR
	II-B	S-1	2 - HR
5 <= X < 10	II-B	A, B, S-1, S-2	1 - HR
10 <= X < 30	II-B	A, B, S-1, S-2	0 - HR
X >= 30	II-B	A, B, S-1, S-2	0 - HR

3.9 OPENING PROTECTION (IBC 705) (IBC TABLE 705.8)

FIRE SEPARATION DISTANCE = X (FEET)	DEGREE OF OPENING PROTECTION = PROTECTION/SPRINKLER	ALLOWABLE AREA = % OF AREA
15 to less than 20	Unprotected, Nonsprinklered	25%
	Unprotected, Sprinklered	75%
20 to less than 25	Unprotected, Nonsprinklered	45%
	Unprotected, Sprinklered	NO LIMIT
25 to less than 30	Unprotected, Nonsprinklered	70%
	Unprotected, Sprinklered	NO LIMIT
30 or greater	Unprotected, Nonsprinklered	NO LIMIT
	Unprotected, Sprinklered	NO LIMIT

4.0 LIFE SAFETY - EGRESS

4.1 OCCUPANT LOADS (IBC TABLE 1004.1.1)

AREA NAME	AREA (NSF)	OCCUPANT LOAD FACTOR	OCCUPANT LOAD
RMS 100, 101, 103,104, 106.113-117,... (ASSEMBLY, A-3)	5414.96	15	361
RMS 102 (ASSEMBLY, A-3)	965.51	5	194
RMS 105, 109, 118-120 (BUSINESS)	1,003.50	100	11
RMS 107 (STORAGE, S-2)	114.14	300	1
RMS 108 (STORAGE, S-2)	84.51	300	1
RMS 110 & 111 (ASSEMBLY, A-2)	529.98	200	3
RMS 112 (STORAGE, S-1)	163.27	300	1
RMS 126 (STORAGE, S-1)	87.51	300	1
TOTAL	**8,363.38**		**573**

4.2 EXIT ACCESS TRAVEL DISTANCE (IBC TABLE 1016.1)

OCCUPANCY	PROPOSED	MAX. ALLOWED
A	108'-8"	*250'-0"

(SEE LIFE SAFETY PLAN)
*With Sprinkler System

4.3 COMMON PATH OF TRAVEL (IBC TABLE 1014.3) *BASED ON IBC 2012

OCCUPANCY	PROPOSED	MAX. ALLOWED
A	64'-3"	*75'-0"
B, S	48'-3"	*100'-0"

(SEE LIFE SAFETY PLAN)
*With Sprinkler System

4.4 NUMBER OF EXITS PER STORY (IBC 1021)

	OCCUPANTS	NUMBER OF EXITS
PROPOSED:	573	3+
MIN. REQUIRED:	501-1,000	3

4.5 EXIT SEPARATION PER STORY (IBC 1015.2.1)

	DISTANCE BETWEEN EXITS	
PROPOSED:	68' 1"	
MIN. REQUIRED:	*60'-1"	
PROPOSED:	20'-7 3/4"	(RM 102)
MIN. REQUIRED:	*16'-3 3/16"	

*With Sprinkler System

4.6 EGRESS WIDTHS (IBC 1005.1)

OCCUPANT LOAD	STAIRWAYS	OTHER EGRESS COMPONENTS
572 OCC'S	N/A	0.2"
TOTAL REQ'D:	N/A	114.4"

4.7 STAIR WIDTH (IBC 1007.3 & 1009.1)
NOT LESS THAN 44"
NOT LESS THAN 36" SERVING OCCUPANT LOAD OF LESS THAN 50
NOT LESS THAN 48" CLEAR TO BE PART OF AN ACCESSIBLE MEANS OF EGRESS WHERE THE BLDG IS NOT EQUIPPED THROUGHOUT WITH A SPRINKLER SYSTEM
*No stairways exist in the Transfer Center Building

4.8 CORRIDOR WIDTH (IBC 1018.2)
NOT LESS THAN 44"
NOT LESS THAN 36" SERVING OCCUPANT LOAD OF LESS THAN 50

4.9 CORRIDOR FIRE RATING (IBC TABLE 1018.1)

OCCUPANCY	FIRE-RESISTANCE RATING	
A, B, S	0	With Sprinkler System

4.10 DEAD END CORRIDOR DISTANCE (IBC 1018.4)

OCCUPANCY	MAX. DISTANCE	
B, S	50'-0"	With Sprinkler System
A	20'-0"	With or Without Sprinkler System

5.0 FIRE-RESISTANT CONSTRUCTION

5.1 FIRE WALLS (IBC 706) — NOT REQUIRED

5.2 FIRE BARRIERS (IBC 707; IBC 901.7) — *SEE ARCHITECTURAL PARKING GARAGE CODE SHEET FOR REQ'D RATING BETWEEN THE OPEN PARKING GARAGE AND THE TRANSFER CENTER BUILDING

5.3 SHAFT ENCLOSURES (IBC 708)

STORIES	FIRE-RESISTANCE RATING
1	N/A

*No shaft enclosures exist in the Transfer Center Building

5.4 FIRE PARTITIONS (IBC 709) — NOT REQUIRED

5.5 SMOKE BARRIERS (IBC 710) — NOT REQUIRED

5.6 HORIZONTAL ASSEMBLIES (IBC 712) — NOT REQUIRED

5.7 PENETRATIONS (IBC 713) — RATING AS REQUIRED FOR ASSEMBLY
*SEE CODE REVIEW BY EXIGO FOR REQ'D RATING BETWEEN THE OPEN PARKING GARAGE AND THE TRANSFER CENTER BUILDING

6.0 FIRE PROTECTION SYSTEMS

6.1 AUTOMATIC SPRINKLER SYSTEM (IBC 903) — REQUIRED

6.2 STANDPIPE SYSTEMS (IBC 905) — NOT REQUIRED

6.3 PORTABLE FIRE EXTINGUISHERS (IBC 906) — AT EXIT LOCATIONS - MAX. TRAVEL DISTANCE TO EXTINGUISHER = 75'
* Not required in Group A and B occupancies equipped throughout with quick response sprinklers
*Required within 30 feet of commercial cooking equipment
*Required in areas where flammable or combustible liquids are stored, used, or dispensed

* 6.0 FIRE PROTECTION SYSTEMS - CONTINUED IN NEXT COLUMN

6.0 FIRE PROTECTION SYSTEMS (CONTINUED)

6.4 FIRE ALARM AND DETECTION SYSTEMS (IBC 907) — *NOT REQUIRED
*With Sprinkler System and where the occupant notification applicances will activate throughout the notification zones upon sprinkler waterflow

6.5 SMOKE CONTROL SYSTEMS (IBC 909) — NOT REQUIRED

7.0 ACCESSIBILITY

BUILDING ACCESSIBLE ROUTE, ENTRANCES, FACILITIES, AND SIGNAGE TO CONFORM TO REQUIREMENTS OF IBC CHAPTER 11.

8.0 ENERGY EFFICIENCY — SEE INTERNATIONAL ENERGY CONSERVATION CODE

9.0 STRUCTURAL DESIGN — SEE STRUCTURAL CODE SHEET

10.0 ELECTRICAL — SEE ELECTRICAL CODE SHEET

11.0 MECHANICAL SYSTEMS — SEE MECHANICAL CODE SHEET

12.0 PLUMBING SYSTEMS — SEE PLUMBING CODE SHEET

12.1 PLUMBING FIXTURE RATIO (IBC 2902.1.1)

A-2 OCCUPANTS	3
MALE (50%)	2
FEMALE (50%)	2
A-3 OCCUPANTS	554
MALE (50%)	277
FEMALE (50%)	277
B OCCUPANTS	11
MALE (50%)	6
FEMALE (50%)	6
S-1 OCCUPANTS	2
MALE (50%)	1
FEMALE (50%)	1
S-2 OCCUPANTS	2
MALE (50%)	1
FEMALE (50%)	1

12.2 PLUMBING FIXTURE COUNT (IBC 2902) (IBC TABLE 2902.1)

	REQUIRED	PROVIDED
WC		
MALE	2	6
FEMALE	3	10
UNISEX	0	1
URINAL		
MALE	0	4
LAV.		
MALE	1	5
FEMALE	1	5
UNISEX	0	1
DRINKING F.	1	2
SERV. SINK	1	1

VICINITY MAP

RNL
1050 17th STREET
SUITE A200
DENVER, CO 80265
303 295 1717 t
303 292 0845 f

100% CONSTRUCTION DOCUMENTS

REFERENCES – BENCHMARKS | DATE | REVISIONS | BY

ARCHITECTS SEAL — 02/05/2016 — 100% CONSTRUCTION DOCUMENTS

SCALE: HOR: SHOWN VER: SHOWN
DATE: 02/05/16 DESIGN BY: Designer DRAWN BY: Author CHKD. BY: Checker APPD. BY: Approver

PROJECT NAME: NORTHGATE TRANSFER CENTER, EL PASO, TEXAS.

CITY OF EL PASO
CAPITAL IMPROVEMENT DEPARTMENT

SHEET TITLE: TRANSFER CTR CODE & LIFE SAFETY INFORMATION

SHEET: G101

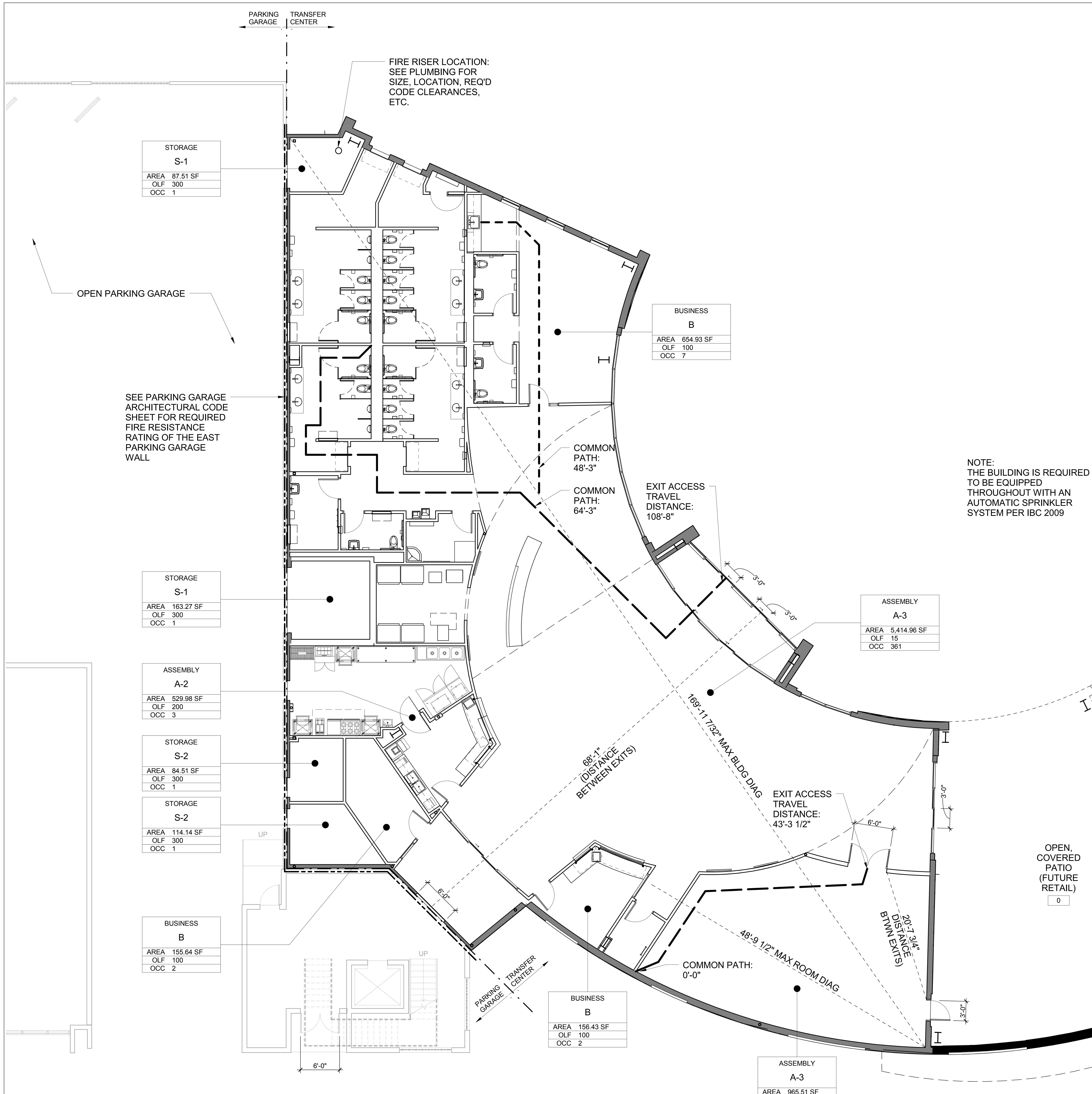

1 LEVEL 1 LIFE SAFETY PLAN - TRANSFER CENTER
1/8" = 1'-0"

NOTE:
THE BUILDING IS REQUIRED TO BE EQUIPPED THROUGHOUT WITH AN AUTOMATIC SPRINKLER SYSTEM PER IBC 2009

GENERAL NOTES

1	THE FOLLOWING GENERAL NOTES APPLY TO THE ENTIRE SET OF DRAWINGS AND ARE NOT SPECIFIC TO ANY ONE DISCIPLINE.
2	IT IS THE CONTRACTORS RESPONSIBILITY TO REVIEW AND COORDINATE THE WORK OF ALL SUB-CONTRACTORS, TRADES AND SUPPLIERS WITH REQUIREMENTS OF THE CONTRACT BEFORE COMMENCING CONSTRUCTION, AND ASSURE THAT ALL PARTIES ARE AWARE OF ALL REQUIREMENTS, REGARDLESS OF WHERE THE REQUIREMENTS OCCUR IN THE CONTRACT DOCUMENTS, WHICH MIGHT AFFECT THE WORK OF THAT PARTY.
3	THE WORK DESCRIBED BY THE DRAWINGS OF ANY ONE DISCIPLINE MAY BE AFFECTED BY THE WORK DESCRIBED ON DRAWINGS OF ANOTHER DISCIPLINE AND MAY REQUIRE CROSS REFERENCE. PARTIAL SETS OF DRAWINGS ARE INCOMPLETE AND SHOULD NOT BE DISTRIBUTED OR UTILIZED BY THE CONTRACTOR.
4	THE DRAWINGS AND SPECIFICATIONS ESTABLISH MINIMUM REQUIREMENTS FOR THE DESIGN AND CONSTRUCTION OF THE PROJECT.
5	ARCHITECT IS NOT RESPONSIBLE FOR ACCURACY OF EXISTING CONDITIONS SHOWN IN THESE DOCUMENTS. GC SHALL CONTACT ARCHITECT IMMEDIATELY IF ANY DISCREPANCIES OCCUR IN THE FIELD.
6	THE CONTRACTOR SHALL IDENTIFY AND NOTIFY IN WRITING TO THE ARCHITECT CONFLICTS BETWEEN THE WORK OF DIFFERENT PARTIES, AND DISCREPANCIES BETWEEN THE DOCUMENTS AND THE ACTUAL CONDITIONS AT THE EARLIEST POSSIBLE DATE SO AS TO ALLOW REASONABLE AND ADEQUATE TIME FOR THE CONFLICT TO BE RESOLVED WITHOUT DELAYING THE WORK. ALL DEVIATIONS FROM THAT WHICH IS REQUIRED BY THE CONTRACT DOCUMENTS MUST BE APPROVED IN ADVANCE BY THE ARCHITECT AND OWNER PRIOR TO PROCEEDING.
7	THE GENERAL NOTES, SYMBOLS AND DEFINITIONS APPLICABLE TO EACH DISCIPLINE CAN BE FOUND AT THE FRONT OF EACH DISCIPLINE'S SET OF DRAWINGS AND IS LISTED AS PART OF THE OVERALL PROJECT INDEX OF DRAWINGS.
8	BASIC FIRE PROTECTION AND EXITING CONCEPTS ARE ILLUSTRATED BY THE LIFE SAFETY AND CODE PLANS ON THE 'G' SERIES SHEETS. THE CONTRACTOR SHALL BE FAMILIAR WITH REQUIREMENTS AND CONSTRUCTION SHALL BE IN COMPLIANCE WITH REFERENCED FIRE RATED ASSEMBLY TESTS AND STANDARDS.
9	THE ARCHITECTURAL DRAWINGS ESTABLISH, COORDINATE, AS WELL AS TAKE PRECEDENCE FOR THE FINISHED APPEARANCE AND EXACT LOCATION OF ALL EXPOSED ELEMENTS OF THE WORK OF ALL TRADES, INCLUDING THAT WORK WHICH IS ILLUSTRATED PRIMARILY ON DRAWINGS OF OTHER DISCIPLINES.
10	THE DRAWINGS MAY MAKE REFERENCE TO AND/OR ILLUSTRATE ITEMS WHICH ARE NOT PART OF THE WORK OF THE CONTRACT. THESE 'NOT IN CONTRACT' ITEMS AS INDICATED ARE REFERENCED AND/OR ILLUSTRATED FOR THE CONTRACTORS REFERENCE, INFORMATION AND COORDINATION ONLY.
11	THE CONTRACTOR IS RESPONSIBLE TO COMPLY WITH ALL APPLICABLE LAWS, CODES, REGULATIONS AND ORDINANCES OF THE PLACE (CITY, COUNTY,DISTRICT, AND STATE) WHERE THE PROJECT IS LOCATED.
12	THE CONTRACTOR SHALL OBTAIN ALL REQUIRED PERMITS AND SIMILAR RELEASES REQUIRED FOR THE CONSTRUCTION AND OCCUPANCY OF THE PROJECT. THE CONTRACTOR SHALL FURNISH COPIES OF ALL SUCH ITEMS TO THE OWNER AND ARCHITECT WITHIN 10 DAYS OF RECEIPT OF SUCH ITEMS. IF PERMITS ARE ISSUED SUBJECT TO CERTAIN CONDITIONS OR REVISIONS TO THE WORK OR IF PERMITS ARE DELAYED FOR ANY REASON, THE CONTRACTOR SHALL IMMEDIATELY NOTIFY THE OWNER AND ARCHITECT.
13	THE CONTRACTOR SHALL COORDINATE AND OBTAIN ALL REQUIRED INSPECTIONS OF WORK, INCLUDING THAT PERFORMED BY OWNER. CONTRACTOR SHALL REGULARLY UPDATE OWNER AND ARCHITECT REGARDING THE STATUS OF INSPECTIONS.
14	THE CONTRACTOR SHALL TAKE PRECAUTIONS TO MAINTAIN AND PROTECT NEW WORK AS WELL AS EXISTING SYSTEMS AND ELEMENTS WHICH ARE TO REMAIN. ANY DAMAGE TO SUCH SYSTEMS AND ELEMENTS SHALL BE IMMEDIATELY REPAIRED IN A MANNER ACCEPTABLE TO THE ARCHITECT. IF SATISFACTORY REPAIRS CANNOT BE MADE, THE CONTRACTOR SHALL REPLACE SYSTEMS AND ELEMENTS WITH NEW PRODUCTS ACCEPTABLE TO THE ARCHITECT. ALL REPAIRS AND REPLACEMENT COSTS SHALL BE THE FINANCIAL RESPONSIBILITY OF THE CONTRACTOR.
15	THE CONTRACTOR SHALL COORDINATE ALL WORK WITH APPLICABLE UTILITY PROVIDERS.
16	THE CONTRACTOR SHALL COORDINATE ALL MECHANICAL CHASE SIZES WITH MECHANICAL SUB-CONTRACTOR AND NOTIFY ARCHITECT WITH DISCREPANCIES IN THE FIELD.
17	THE DRAWINGS SHALL NOT BE REPRODUCED FOR SUBMITTALS. DRAWINGS OR PORTIONS THEREOF USED FOR SUBMITTALS WILL BE REJECTED AND RETURNED TO THE CONTRACTOR WITHOUT THE APPROVAL OF THE ARCHITECT.
18	THE CONTRACTOR SHALL PROVIDE AND COORDINATE ALL BLOCK-OUTS, SLEEVES, INSERTS, BOLTS, PLATES, ETC. FOR ALL TRADES PRIOR TO PLACING CONCRETE OR MASONRY.
19	THE CONTRACTOR SHALL BE SOLELY RESPONSIBLE FOR MEANS, METHODS AND SEQUENCES OF CONSTRUCTION.
20	THE CONTRACTOR SHALL PROMPTLY REMOVE AND PROPERLY DISPOSE OF OR RECYCLE ALL CONSTRUCTION AND DEMOLITION DEBRIS. THE CONTRACTOR SHALL OBTAIN APPROVAL OF OWNER FOR DETAILS RELATED TO ALL SITE ACCESS AND REMOVAL PLANS.
21	THE CONTRACTOR SHALL BECOME FAMILIAR WITH AND COMPLY WITH OWNER'S PROCEDURES FOR MAINTAINING A SECURE SITE AND BUILDING.
22	EACH INSTALLER SHALL EXAMINE THE SUBSTRATE CONDITION AND/OR SITE CONDITIONS WHICH AFFECT THE QUALITY OF EACH PRODUCT TO BE INSTALLED. IF ANY CONDITIONS EXIST WHICH WILL HAVE A DETRIMENTAL EFFECT ON THE QUALITY OF THE INSTALLATION, THE INSTALLER SHALL IMMEDIATELY ADVISE THE CONTRACTOR. INSTALLATION SHALL NOT PROCEED UNTIL THE UNSATISFACTORY CONDITIONS ARE CORRECTED. INSTALLATION OF PRODUCTS SHALL SIGNIFY ACCEPTANCE BY THE INSTALLER OF THE SUBSTRATE CONDITIONS.
23	THE CONTRACTOR SHALL MAINTAIN A CURRENT/UPDATED RECORD OF DRAWINGS ON SITE AT ALL TIMES.
24	FOR THE PURPOSE OF PRICING/ESTIMATES, WHEN THERE IS A CONFLICT/DISCREPANCY IN THE DRAWINGS AND/OR SPECIFICATIONS, THE CONTRACTOR SHALL PRICE THE HIGHER COST ITEM.
25	CONTRACTOR AND SUBCONTRACTOR SHALL NOT SCALE CONSTRUCTION DOCUMENTS.
26	ALL FINISH MATERIALS SHALL CONFORM TO I.B.C. FOR FLAME SPREAD AND SMOKE DEVELOPMENT, REFER TO SPECIFIC MATERIAL SPECIFICATION SECTION FOR ADDITIONAL REQUIREMENTS.
27	THE CONTRACTOR SHALL COORDINATE INFORMATION THAT IS PART OF ONE OR MORE SEPARATE BID PACKAGES WITH ADDITIONAL INFORMATION ISSUED IN THE BID PACKAGE. THE MULTIPLE BID PACKAGES SHALL CONSTITUTE A COMPLETE PROJECT.
28	THE CONTRACTOR SHALL COORDINATE ALL LOCATIONS AND SIZES OF HOUSEKEEPING PADS WITH MECHANICAL AND ELECTRICAL SUB-CONTRACTORS AND EQUIPMENT.
29	TOUCH UP FIREPROOFING AT SUPPORT BEAMS/TRUSSES AS REQUIRED TO MEET FIRE PROOFING REQUIREMENTS.
30	THE CONTRACTOR SHALL BE RESPONSIBLE FOR PROVIDING A DUST BARRIER AT BASE BUILDING FACILITIES THROUGHOUT CONSTRUCTION.
31	THE CONTRACTOR SHALL PROTECT ALL EXISTING BASE BUILDING ELEMENTS.

CODE LEGEND

- 1 HOUR FIRE BARRIER
- 2 HOUR FIRE BARRIER
- 3 HOUR FIRE BARRIER
- 4 HOUR FIRE BARRIER
- ROUTE B — TRAVEL PATH TO EXIT
- EXTINGUISHER ROUTE — TRAVEL PATH TO EXTINGUISHER
- MAX BLDG DIAG — BUILDING DIAGONAL

ASSEMBLY A-3 — OCCUPANCY CLASSIFICATION
AREA 528 SF — AREA
OLF 15 — OCCUPANCY LOAD FACTOR
OCC 36 — NUMBER OF OCCUPANTS

CODE LEGEND
1/4" = 1'-0"

RNL
1050 17th STREET
SUITE A200
DENVER, CO 80265
303 295 1717 t
303 292 0845 f

100% CONSTRUCTION DOCUMENTS

REFERENCES – BENCHMARKS
REVISIONS
DATE
BY

ARCHITECTS SEAL
02/05/2016
100% CONSTRUCTION DOCUMENTS

SCALE
HOR: SHOWN
VER: SHOWN
DATE: 02/05/16
DESIGN BY: Designer
DRAWN BY: Author
CHKD. BY: Checker
APPD. BY: Approver

PROJECT NAME
NORTHGATE TRANSFER CENTER
EL PASO, TEXAS.

CITY OF EL PASO
CAPITAL IMPROVEMENT DEPARTMENT

SHEET TITLE
TRANSFER CENTER CODE - BUILDING PLAN

SHEET
G102

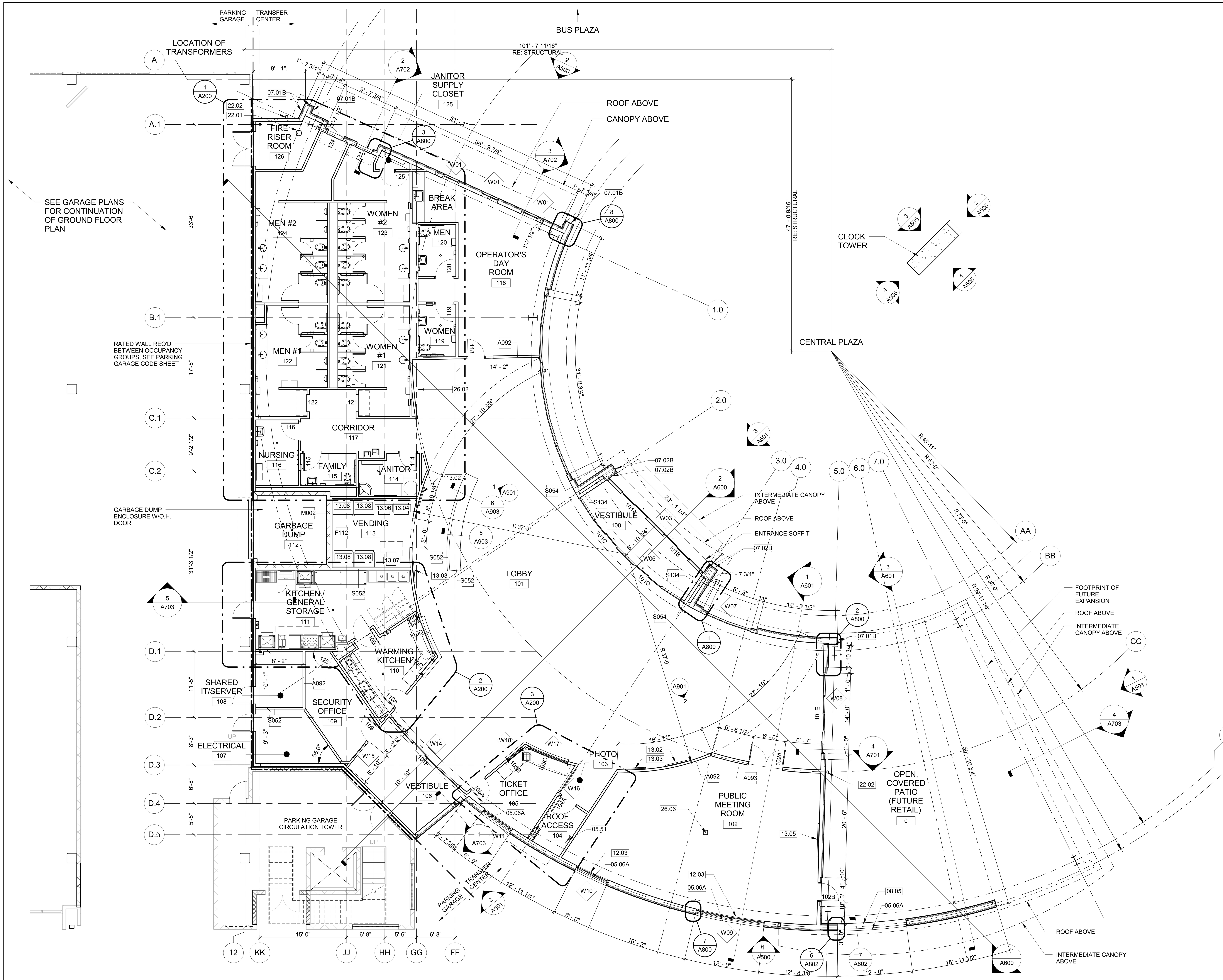

1 LEVEL 1 FLOOR PLAN
1/8" = 1'-0"

SHEET NOTES	
05.06A	7/16" ALUM. PLATE SURROUND AT WINDOW PERIMETER. COLOR TO MATCH STOREFRONT MULLIONS
05.51	ROOF ACCESS LADDER
07.01B	CONTINUE EXTERIOR WALL PANEL PATTERN AND COLOR FROM PLAZA CURVE TO THIS WALL
07.02B	CONTINUE FIBER CEMENT EXTERIOR WALL PANEL PATTERN AND COLOR TO THIS WALL
08.05	FRAMED OPENING
12.03	DUAL SHADE SYSTEM FOR BLACKOUT AT WINDOWS
13.02	52" TV SCREEN, CABLE CONNECTION (OFCI)
13.03	52" BUS SCHEDULE MONITOR (OFCI)
13.04	TICKET VENDING MACHINE (OFCI)
13.05	80" SCREEN (OFCI)
13.06	FREE-STANDING CHANGE MACHINE (OFCI)
13.07	ATM (OFCI)
13.08	VENDING MACHINE (OFCI)
22.01	FIRE RISER, RE: PLUMBING
22.02	HOSE BIB, RE: PLUMBING
26.02	MOBILE DEVICE CHARGING STATION, RE: ELEC. FOR OUTLET LOCATIONS
26.06	RECESSED FLOOR OUTLET W/ POWER/DATA/HDMI, RE: ELEC

FLOOR PLAN NOTES	
1	PARTITION TYPES, RE: A410
2	EXTERIOR WALL TYPES, RE: A700 & A701
3	WINDOW SCHEDULE, RE: A414 & A415
4	DOOR SCHEDULE, RE: A412
5	FINISH SCHEDULE AND LEGEND, RE: A416

RNL
1050 17th STREET
SUITE A200
DENVER, CO 80265
303 295 1717 t
303 292 0845 f

100% CONSTRUCTION DOCUMENTS

REFERENCES – BENCHMARKS

ARCHITECTS SEAL
02/05/2016

SCALE
HOR: SHOWN
VER: SHOWN

PROJECT NAME
NORTHGATE TRANSFER CENTER
EL PASO, TEXAS.

CITY OF EL PASO
CAPITAL IMPROVEMENT DEPARTMENT

SHEET TITLE
TRANSFER CENTER GROUND FLOOR PLAN

SHEET
A100

SHEET NOTES	
05.52	STEEL GUARDRAIL
07.05	FIBER CEMENT EXTERIOR PANEL MECHANICAL SCREEN
07.55	ROOF CRICKET
07.62E	PARAPET SCUPPER
07.71	EXPANSION JOINT
07.76	ROOF PAVER
08.45	ROOF HATCH
22.14A	4" ROOF DRAIN
22.14B	4" OVERFLOW DRAIN

ROOF PLAN NOTES	
1	SLOPE TO BE 1/4" = 1'-0" AT ALL ROOF AND ROOF CRICKET LOCATIONS

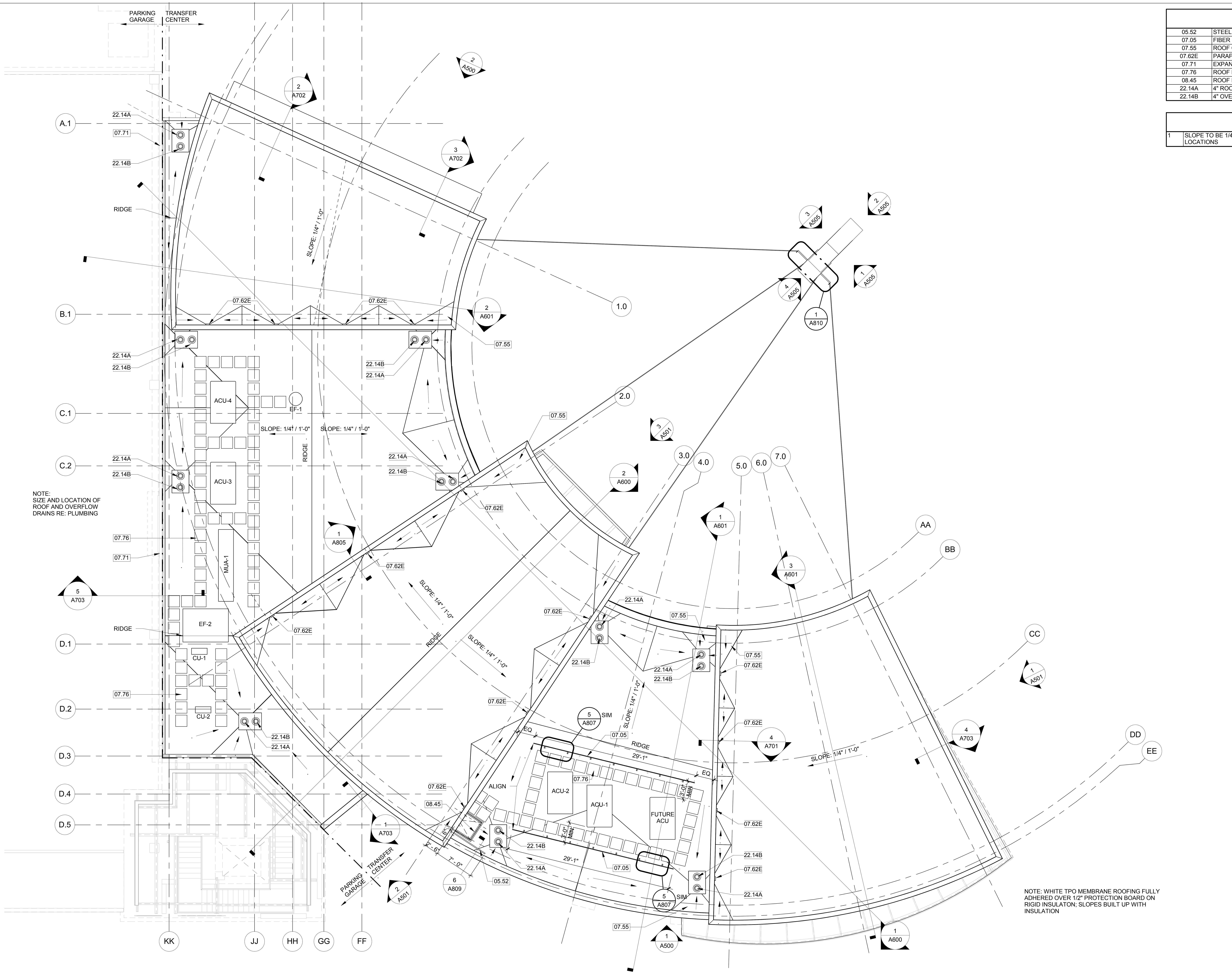

1 ROOF PLAN
1/8" = 1'-0"

RNL
1050 17th STREET
SUITE A200
DENVER, CO 80265
303 295 1717 t
303 292 0845 f

100% CONSTRUCTION DOCUMENTS

REFERENCES – BENCHMARKS
REVISIONS
DATE
BY

ARCHITECTS SEAL
02/05/2016

SCALE
HOR: SHOWN
VER: SHOWN

PROJECT NAME
NORTHGATE TRANSFER CENTER
EL PASO, TEXAS.

CITY OF EL PASO
CAPITAL IMPROVEMENT DEPARTMENT

SHEET TITLE
TRANSFER CENTER ROOF PLAN

SHEET
A101

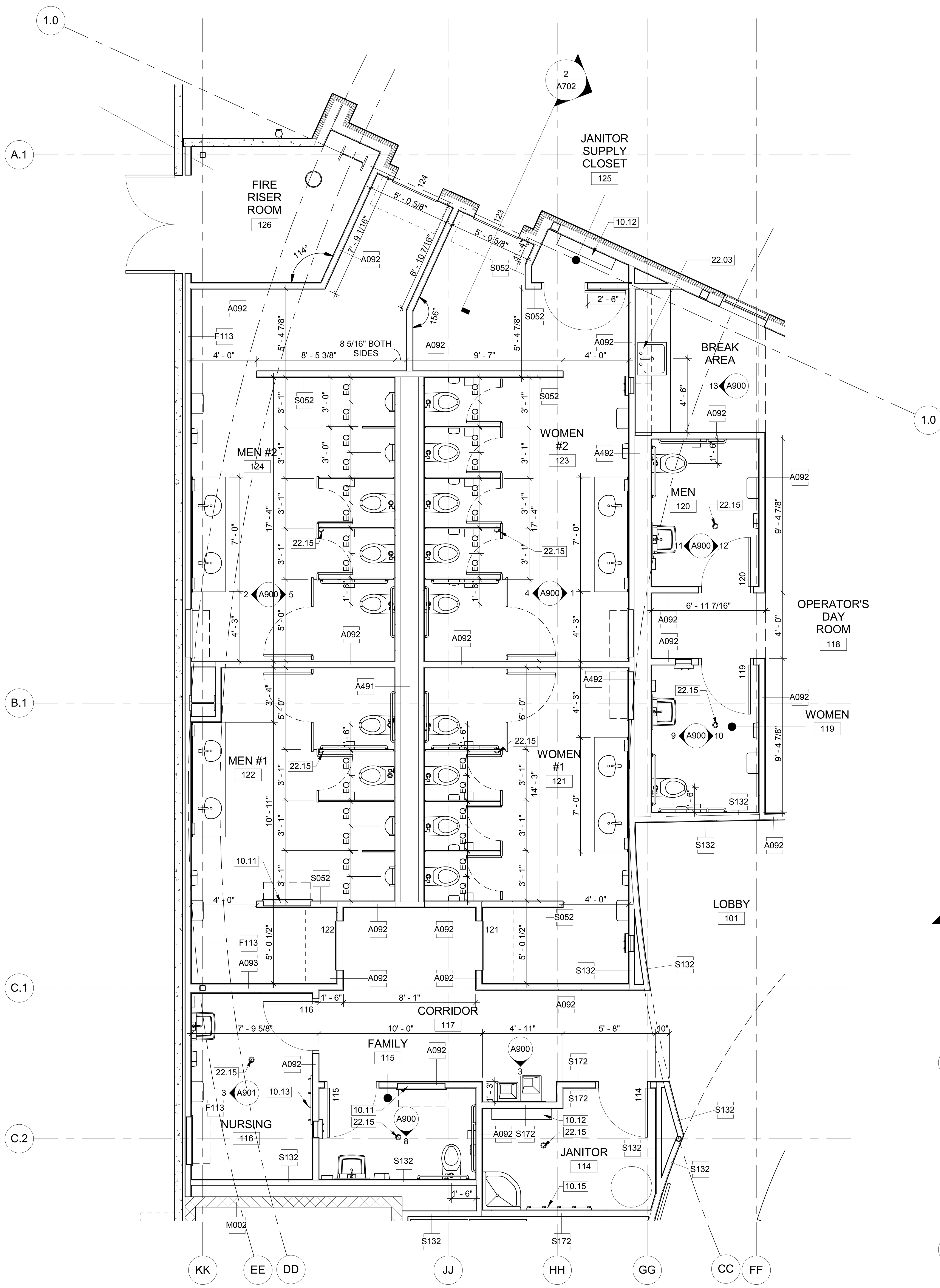

1 ENLARGED PLAN - MEN (118, 120, & 122) AND WOMEN (117, 119, & 121) RESTROOMS, NURSING, FAMILY, JANITOR

1/4" = 1'-0"

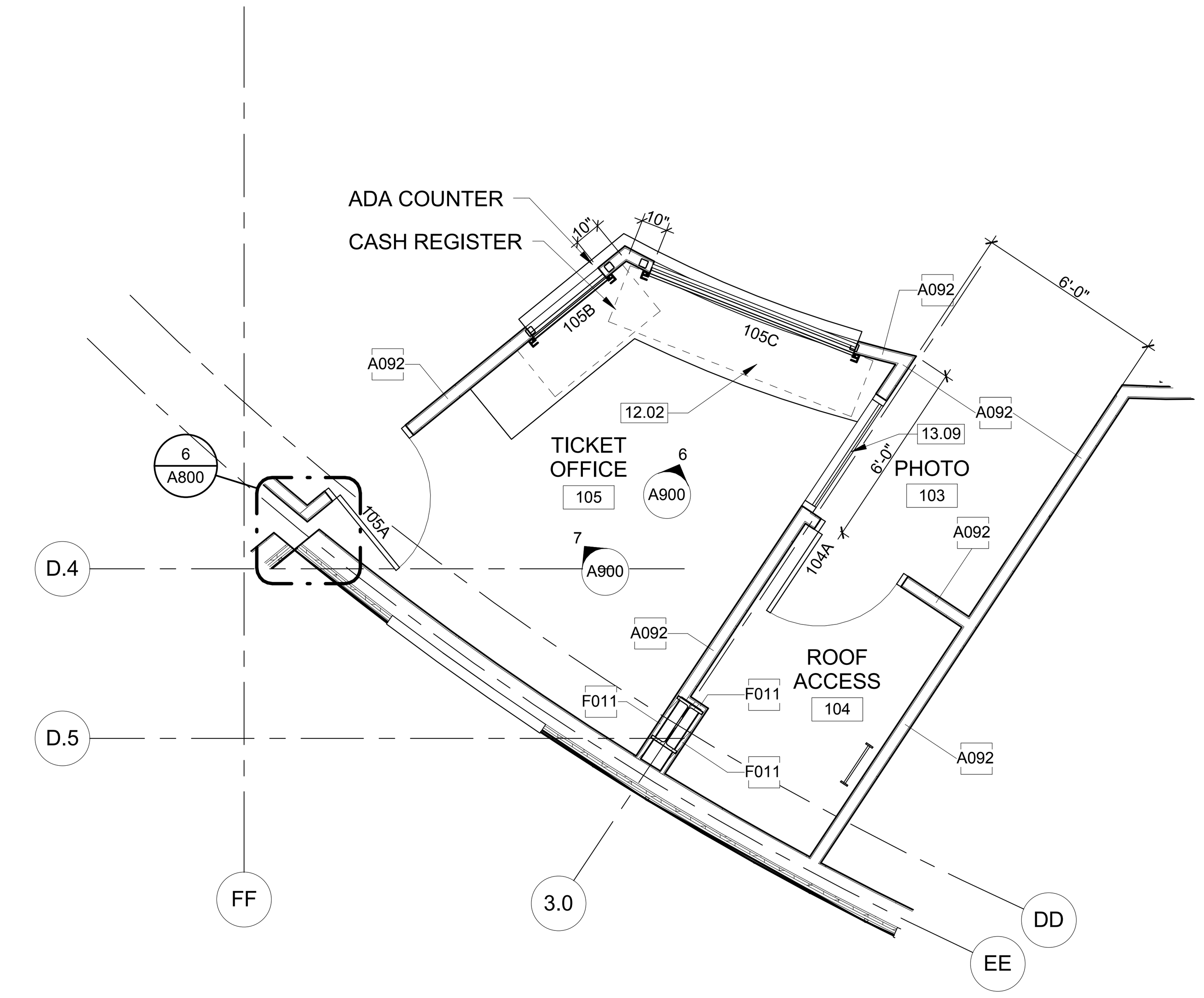

3 ENLARGED PLAN - TICKET COUNTER / OFFICE

1/4" = 1'-0"

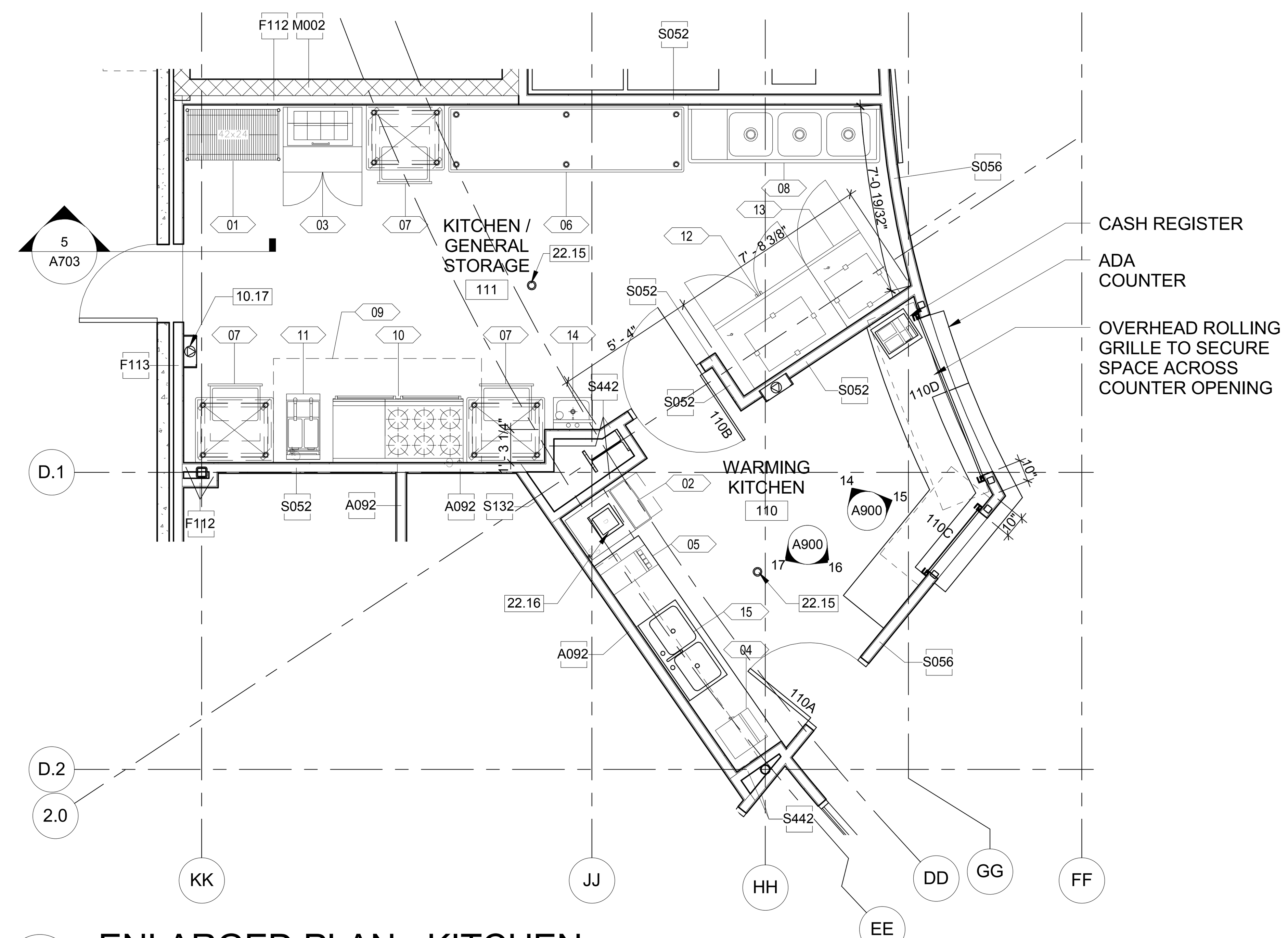

2 ENLARGED PLAN - KITCHEN

1/4" = 1'-0"

SHEET NOTES	
10.11	SURFACE-MOUNTED BABY CHANGING STATION
10.12	SURFACE-MOUNTED UTILITY SHELF
10.13	SURFACE-MOUNTED HAT AND COAT RACK
10.15	SURFACE-MOUNTED MOP AND BROOM HOLDER
10.17	WALL-MOUNTED FIRE EXTINGUISHER CABINET
12.02	SOLID SURFACE COUNTERTOP, SS-1
13.09	CAMERA WITH REMOTE ACCESS, EXACT LOCATION TO BE DETERMINED IN FIELD WITH OWNER (OFCI)
22.03	FILTERED DRINKING WATER FILLER
22.15	FLOOR DRAIN
22.16	FLOOR SINK

SPECIALTY EQUIPMENT SCHEDULE

TYPE	DESCRIPTION	Count
01	MOBILE RACK SHELF	1
02	ICE MACHINE	1
03	FOOD PREP TABLE	1
04	HOT DOG DISPLAY STEAMER	1
05	SOFT DRINK DISPENSER	1
06	WORK TABLE	1
07	WORK TABLE WITH DRAWER	3
08	3 COMPARTMENT SINK	1
09	KITCHEN HOOD	1
10	RANGE WITH 24 INCH RAISED GRIDDLE	1
11	GAS FRYER	1
12	REFRIGERATOR UNIT	1
13	FREEZER UNIT	1
14	HAND WASH SINK	1
15	DOUBLE SINK - STAINLESS STEEL	1

RNL
1050 17th STREET
SUITE A200
DENVER, CO 80265
303 295 1717 t
303 292 0845 f

100% CONSTRUCTION DOCUMENTS

REFERENCES – BENCHMARKS

ARCHITECTS SEAL

02/05/2016

PROJECT NAME

NORTHGATE TRANSFER CENTER

EL PASO, TEXAS.

CITY OF EL PASO

CAPITAL IMPROVEMENT DEPARTMENT

SHEET TITLE

TRANSFER CENTER ENLARGED FLOOR PLANS

SHEET

A200

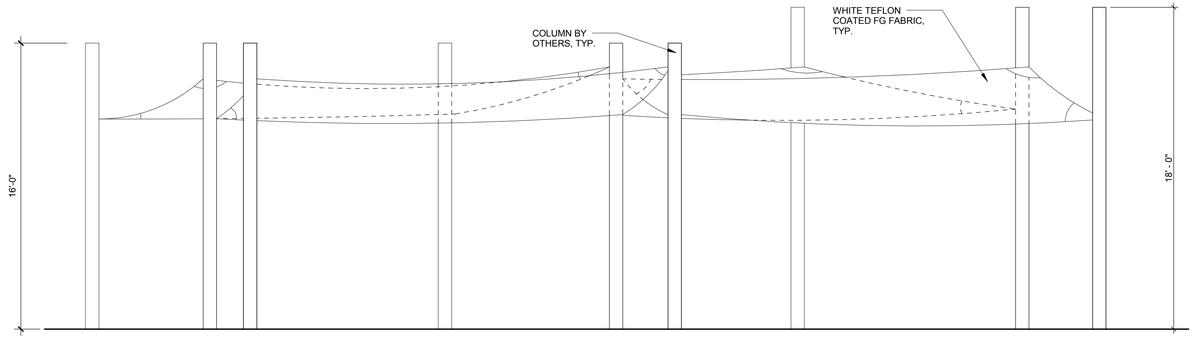

3 SHADE STRUCTURE - LARGE ELEVATION (LOOKING SOUTH)

1/4" = 1'-0"

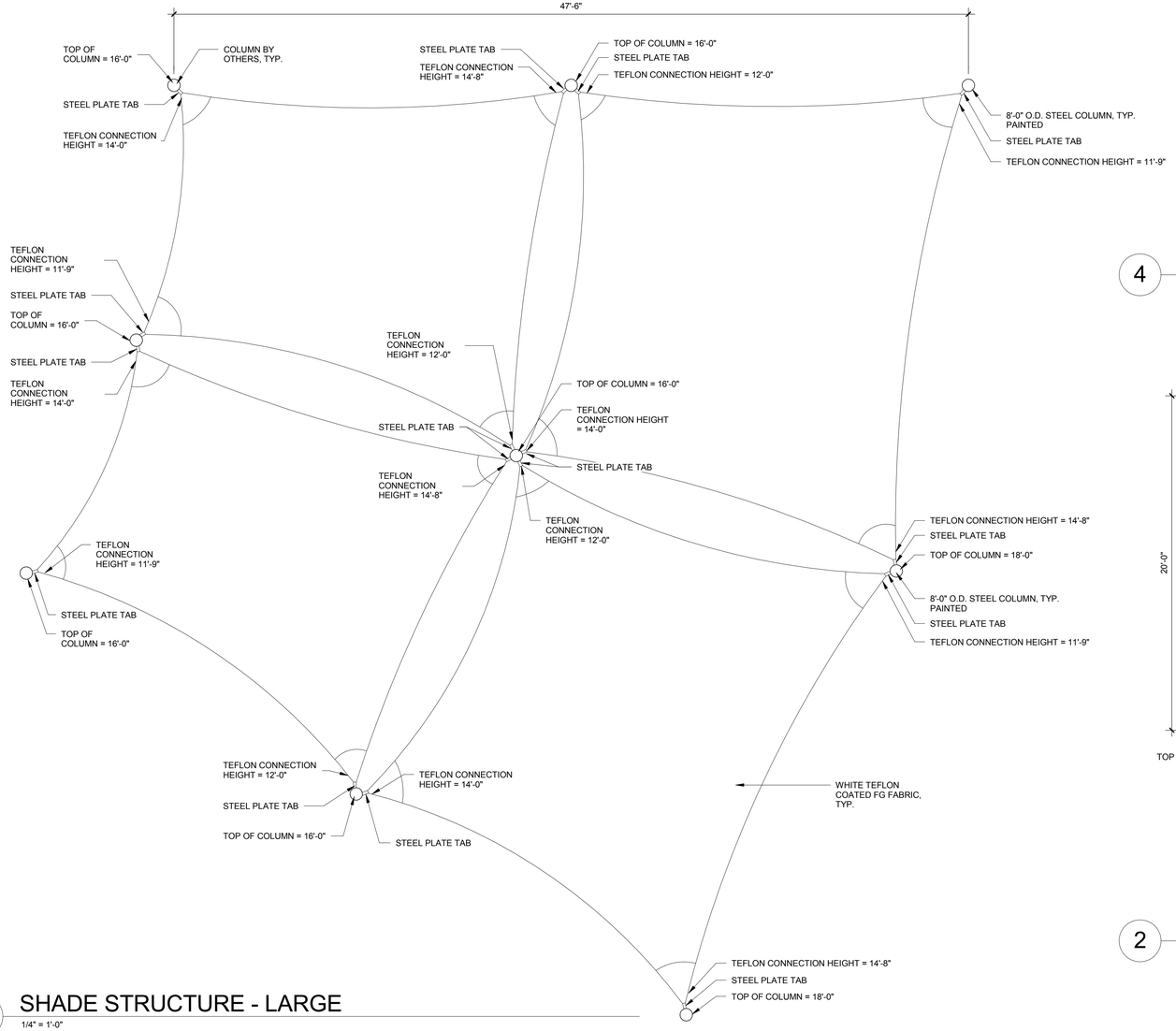

1 SHADE STRUCTURE - LARGE

1/4" = 1'-0"

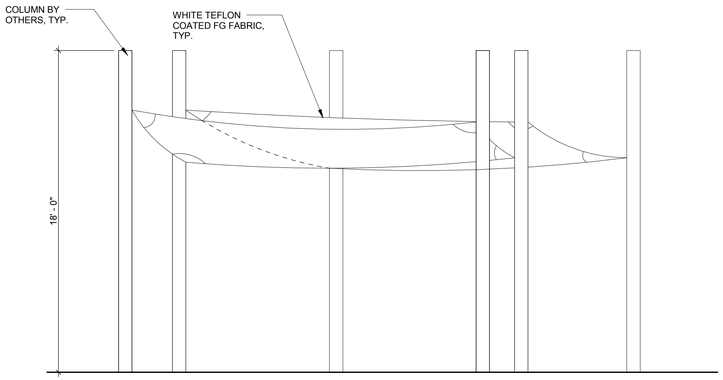

4 SHADE STRUCTURE - SMALL ELEVATION (LOOKING EAST)

1/4" = 1'-0"

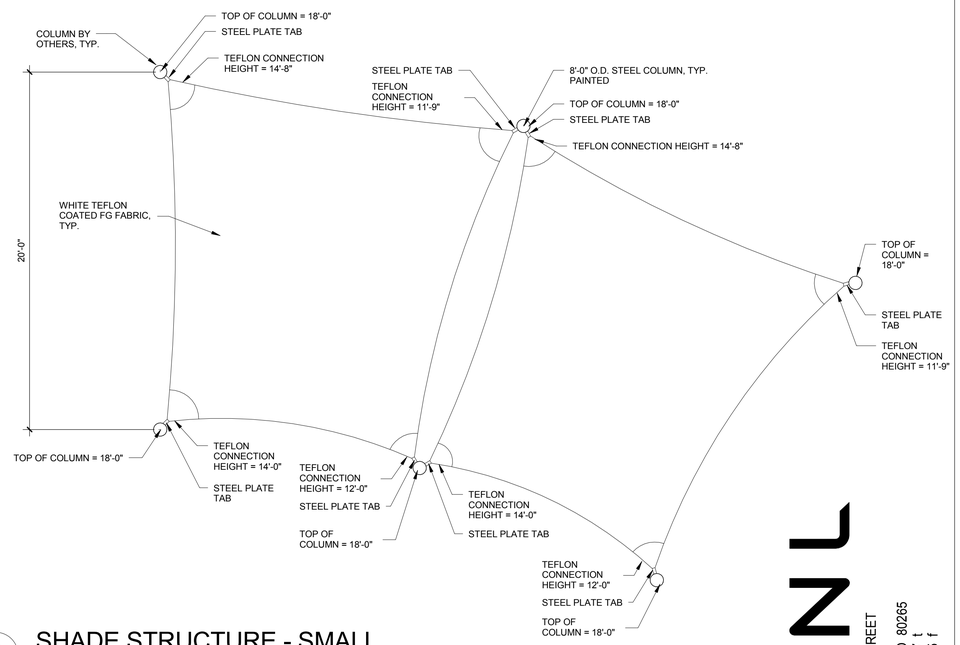

2 SHADE STRUCTURE - SMALL

1/4" = 1'-0"

SHADE STRUCTURES NOTES

1	THE TEFLON SHADE CANOPIES ARE BEING SHOWN FOR REFERENCE AND DESIGN INTENT ONLY. THE DETAILED DESIGN AND ENGINEERING WILL BE DONE BY A SELECTED MANUFACTURER. THE SHADE CANOPIES WILL BE PERMITTED SEPARATELY AS A DEFFERED SUBMITTAL.

REFERENCES – BENCHMARKS

DATE	REVISIONS	BY

ARCHITECT'S SEAL

REGISTERED ARCHITECT · KIMBERLY ANN MEEK · 12937 · STATE OF TEXAS

02/05/2016

100% CONSTRUCTION DOCUMENTS

SCALE
HOR: SHOWN
VER: SHOWN

DATE: 05/4/15
DESIGN BY: Designer
DRAWN BY: Author
CHKD BY: Checker
APPD BY: Approver

PROJECT NAME

NORTHGATE TRANSFER CENTER

EL PASO, TEXAS.

CITY OF EL PASO

CAPITAL IMPROVEMENT DEPARTMENT

THE CITY OF EL PASO TEXAS

SHEET TITLE

TRANSFER CENTER
PLAZA SHADE
STRUCTURES

SHEET
A201

RNL
1050 17th STREET
SUITE A200
DENVER, CO 80265
303 295 1717 t
303 292 0845 f

100% CONSTRUCTION DOCUMENTS

SHADE STRUCTURES NOTES	
1	THE TEFLON SHADE CANOPIES ARE BEING SHOWN FOR REFERENCE AND DESIGN INTENT ONLY. THE DETAILED DESIGN AND ENGINEERING WILL BE DONE BY A SELECTED MANUFACTURER. THE SHADE CANOPIES WILL BE PERMITTED SEPARATELY AS A DEFFERED SUBMITTAL.

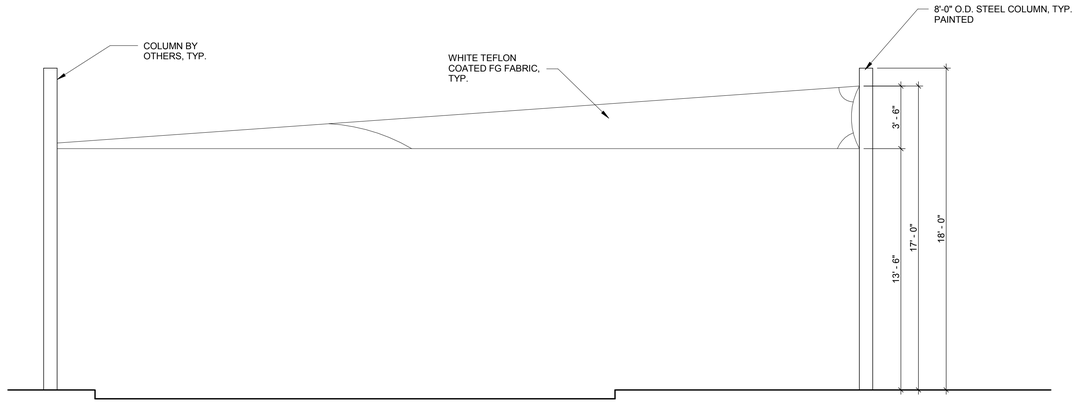

3 SHADE STRUCTURE - BUS BERTH ELEVATION (LOOKING NORTH)

1/4" = 1'-0"

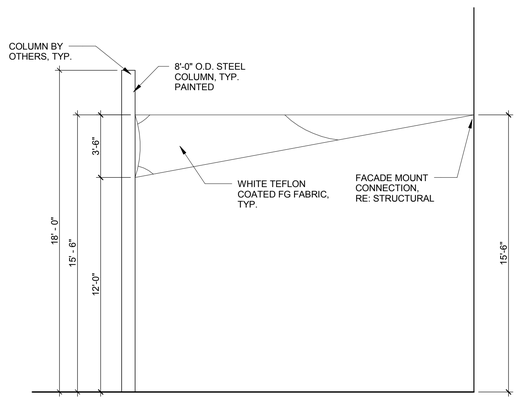

4 SHADE STRUCTURE - BUS BERTH SOUTH BAY ELEVATION (LOOKING EAST)

1/4" = 1'-0"

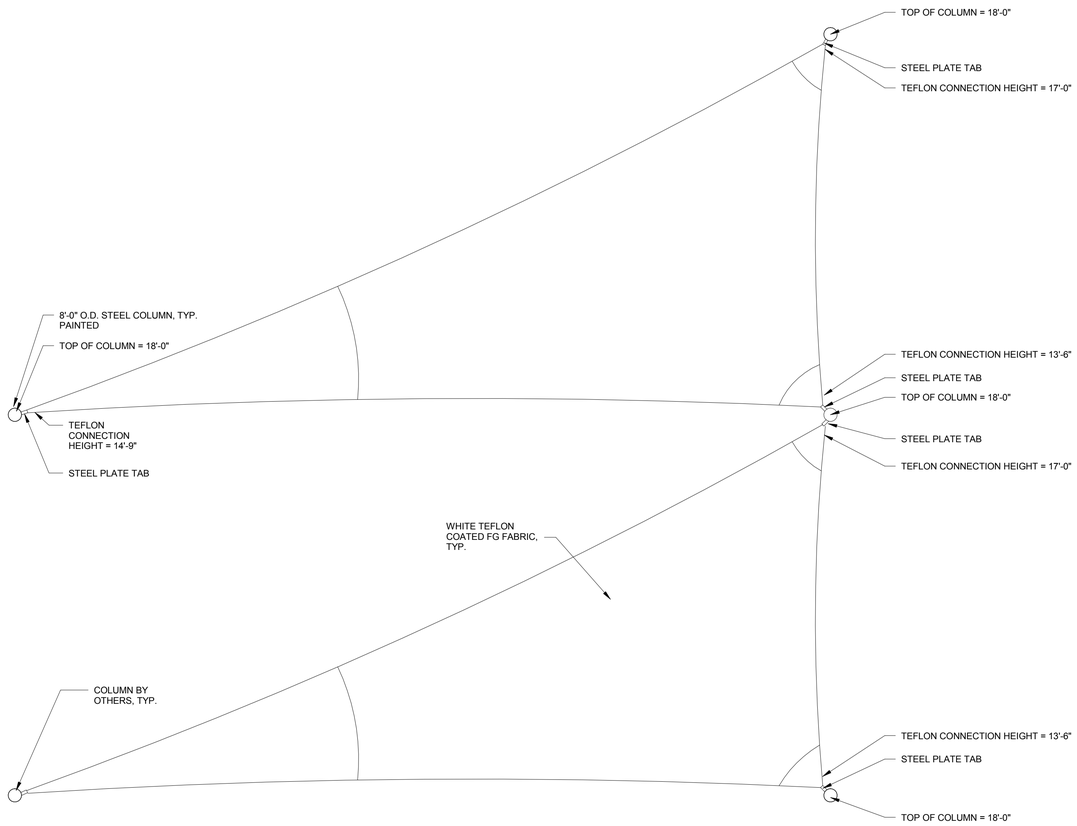

1 SHADE STRUCTURE - BUS BERTH

1/4" = 1'-0"

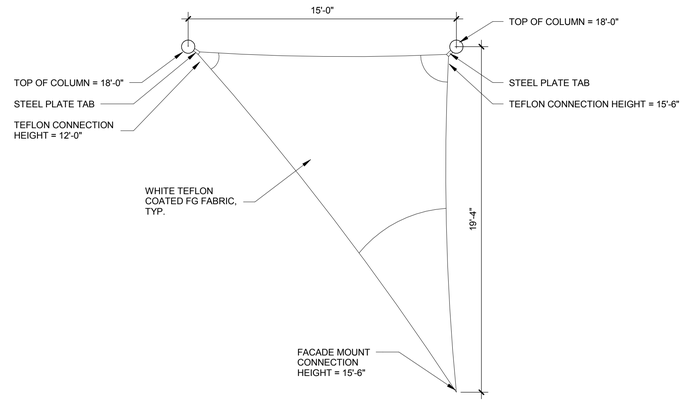

2 SHADE STRUCTURE - BUS BERTH SOUTH BAY

1/4" = 1'-0"

100% CONSTRUCTION DOCUMENTS

RNL
1050 17th STREET
SUITE A200
DENVER, CO 80265
303 295 1717 t
303 292 0845 f

REFERENCES – BENCHMARKS

BY	REVISIONS	DATE

ARCHITECT'S SEAL

REGISTERED ARCHITECT
KIRK M. KELLY
12937
STATE OF TEXAS

02/05/2016

100% CONSTRUCTION DOCUMENTS

SCALE
HOR: SHOWN
VER: SHOWN

DATE: 05/04/16
DESIGN BY: Designer
DRAWN BY: Author
CHKD BY: Checker
APPD BY: Approver

PROJECT NAME

NORTHGATE TRANSFER CENTER

EL PASO, TEXAS.

CITY OF EL PASO
CAPITAL IMPROVEMENT DEPARTMENT

SHEET TITLE

TRANSFER CENTER
PLAZA SHADE
STRUCTURES

SHEET
A202

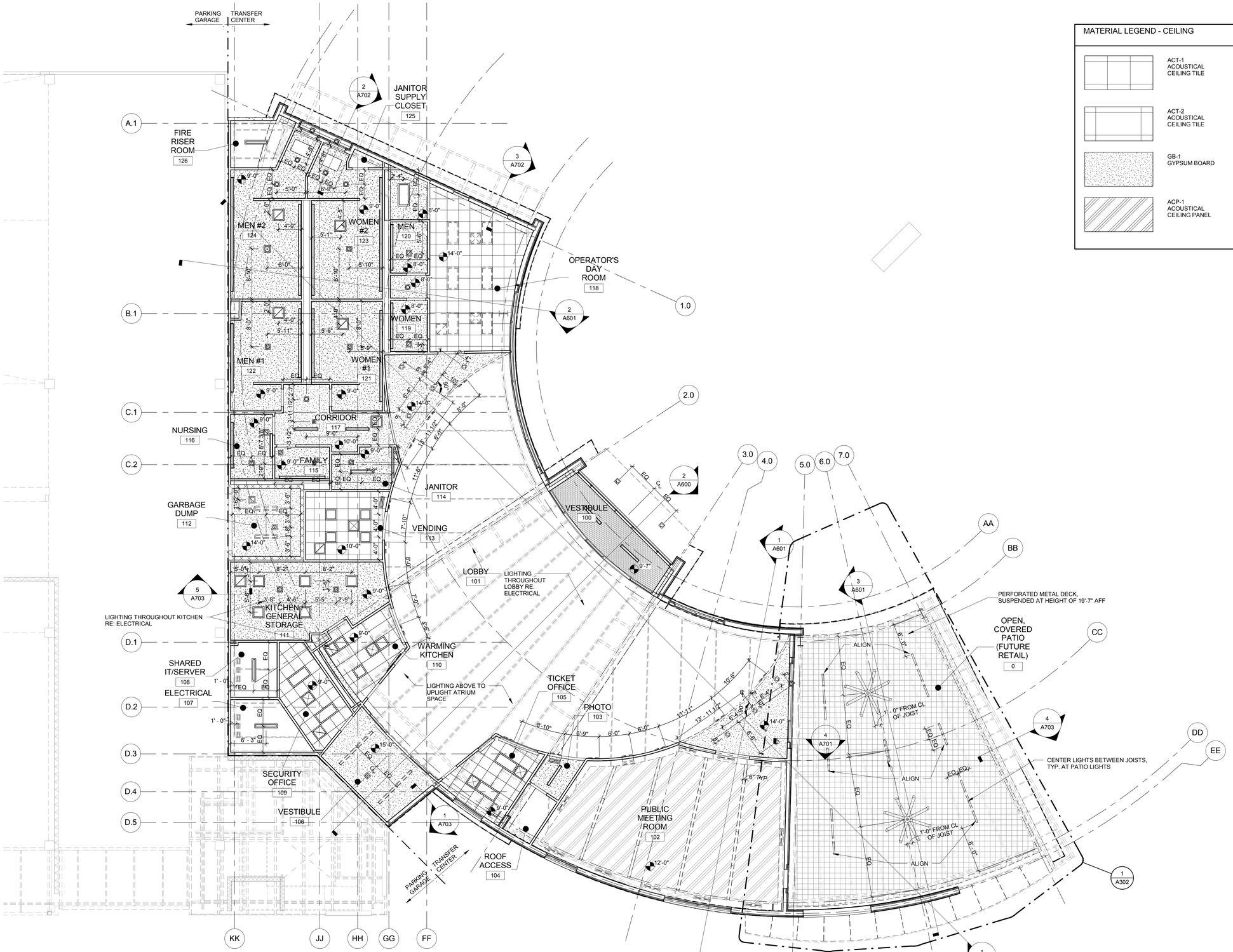

1 LEVEL 1 RCP
1/8" = 1'-0"

MATERIAL LEGEND - CEILING

- ACT-1 ACOUSTICAL CEILING TILE
- ACT-2 ACOUSTICAL CEILING TILE
- GB-1 GYPSUM BOARD
- ACP-1 ACOUSTICAL CEILING PANEL
- PM-1 PERFORATED METAL CEILING
- PM-2 PERFORATED METAL DECK
- OPEN TO STRUCTURE
- NO PATTERN

REFERENCES – BENCHMARKS

BY	REVISIONS	DATE

ARCHITECT'S SEAL
REGISTERED ARCHITECT
12937
STATE OF TEXAS
02/05/2016
100% CONSTRUCTION DOCUMENTS

SCALE
HOR: SHOWN
VER: SHOWN

DATE 05/04/16
DESIGN BY Designer
DRAWN BY Author
CHKD BY Checker
APPD BY Approver

PROJECT NAME
NORTHGATE TRANSFER CENTER
EL PASO, TEXAS.

CITY OF EL PASO
CAPITAL IMPROVEMENT DEPARTMENT

RNL
1050 17th STREET
SUITE A200
DENVER, CO 80265
303 295 1717 t
303 292 0845 f

SHEET TITLE
TRANSFER CENTER REFLECTED CEILING PLAN - LEVEL 1

SHEET
A300

100% CONSTRUCTION DOCUMENTS

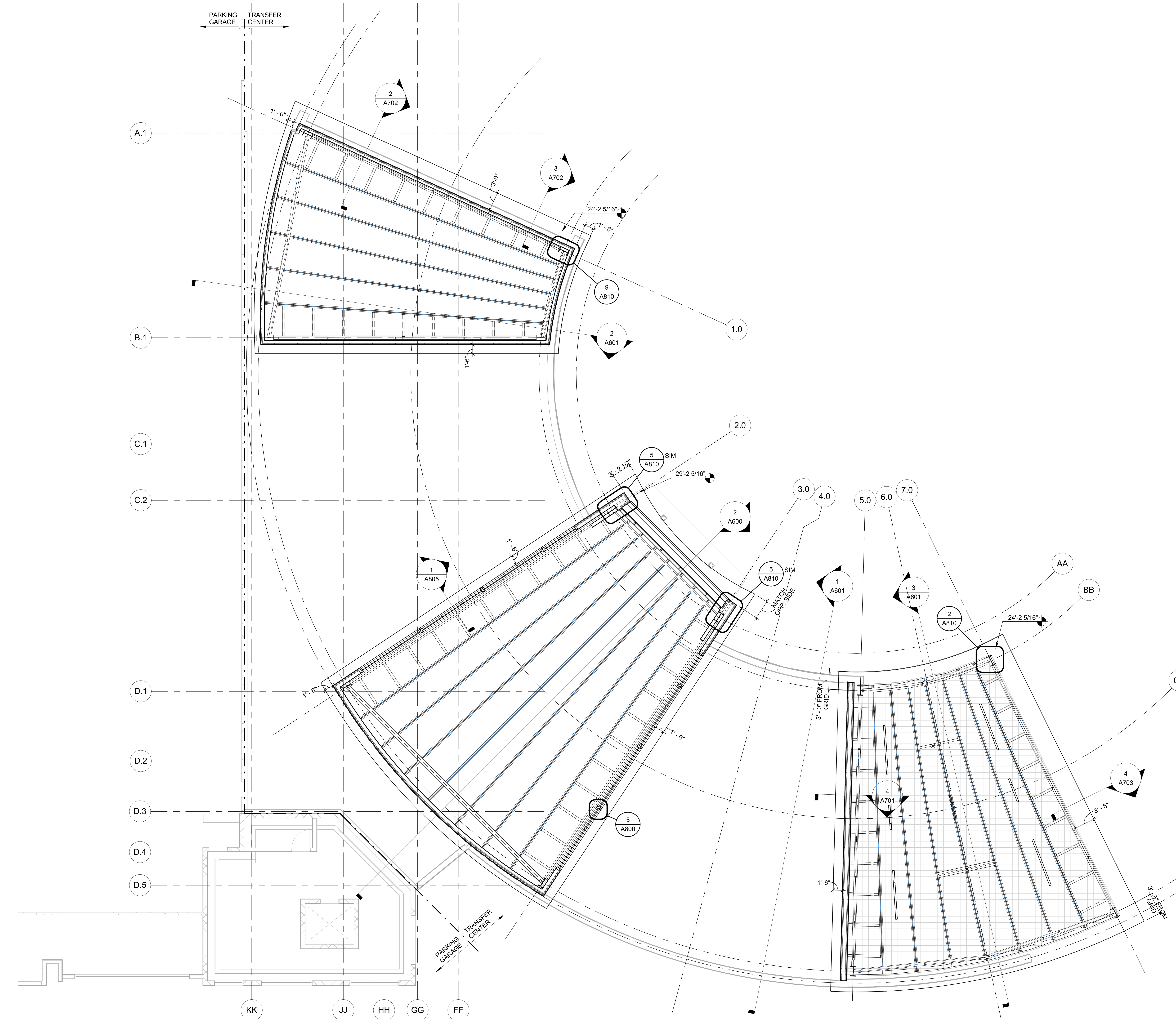

1 ROOF RCP
1/8" = 1'-0"

MATERIAL LEGEND - CEILING

ACT-1 ACOUSTICAL CEILING TILE	PM-1 PERFORATED METAL CEILING
ACT-2 ACOUSTICAL CEILING TILE	PM-2 PERFORATED METAL DECK
GB-1 GYPSUM BOARD	NO PATTERN — OPEN TO STRUCTURE
ACP-1 ACOUSTICAL CEILING PANEL	

RNL
1050 17th STREET
SUITE A200
DENVER, CO 80265
303 295 1717 t
303 292 0845 f

100% CONSTRUCTION DOCUMENTS

REFERENCES – BENCHMARKS

DATE REVISIONS BY

ARCHITECTS SEAL
02/05/2016
100% CONSTRUCTION DOCUMENTS

SCALE
HOR: SHOWN
VER: SHOWN

DATE: 02/04/16
DESIGN BY: Designer
DRAWN BY: Author
CHKD. BY: Checker
APPD. BY: Approver

PROJECT NAME
NORTHGATE TRANSFER CENTER
EL PASO, TEXAS.

CITY OF EL PASO
CAPITAL IMPROVEMENT DEPARTMENT

SHEET TITLE
TRANSFER CENTER ROOF REFLECTED CEILING PLAN

SHEET
A301

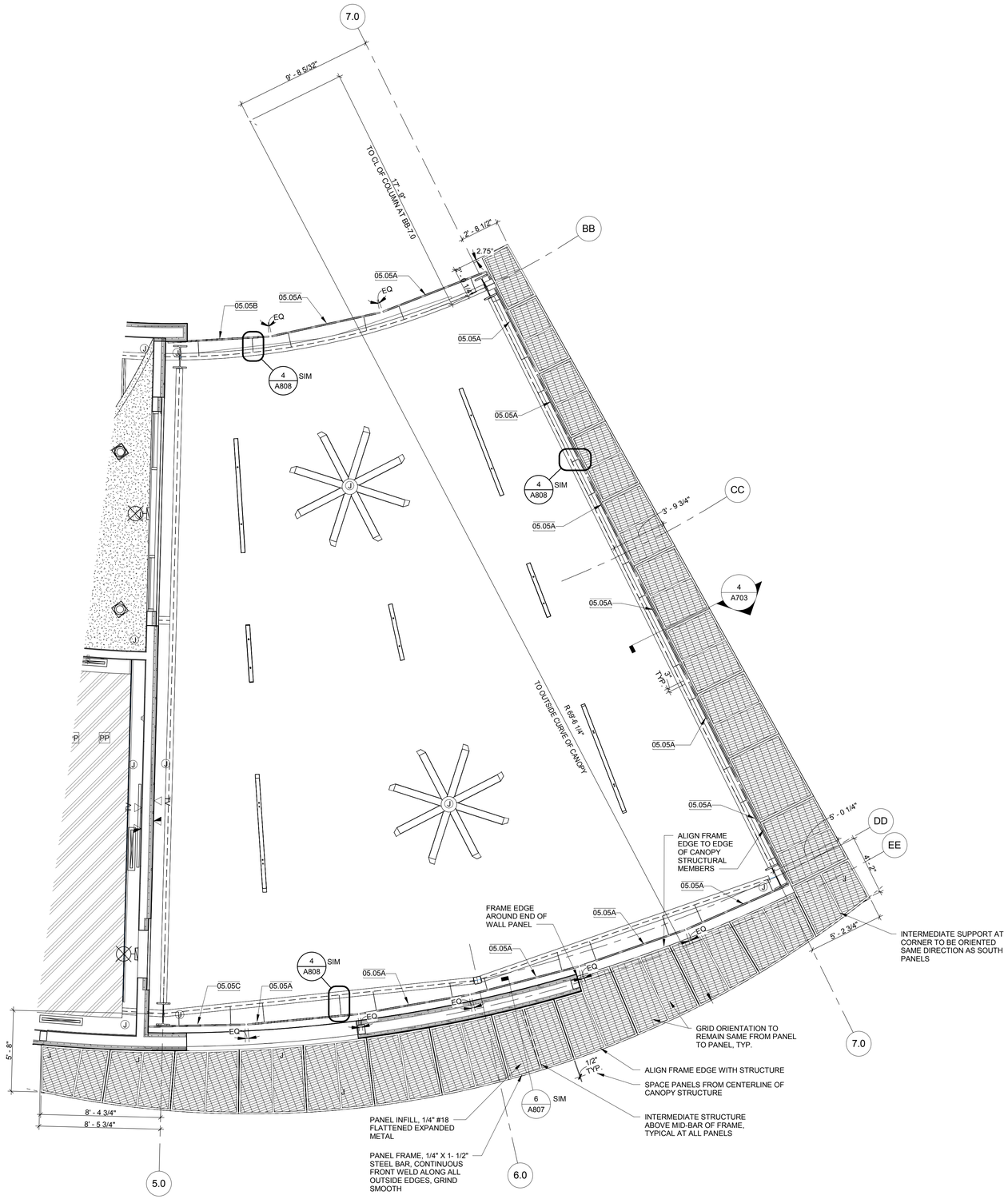

1 SOUTHEAST CANOPY - RCP

1/4" = 1'-0"

MATERIAL LEGEND - CEILING

- ACT-1 ACOUSTICAL CEILING TILE
- ACT-2 ACOUSTICAL CEILING TILE
- GB-1 GYPSUM BOARD
- ACP-1 ACOUSTICAL CEILING PANEL
- PM-1 PERFORATED METAL CEILING
- PM-2 PERFORATED METAL DECK
- NO PATTERN — OPEN TO STRUCTURE

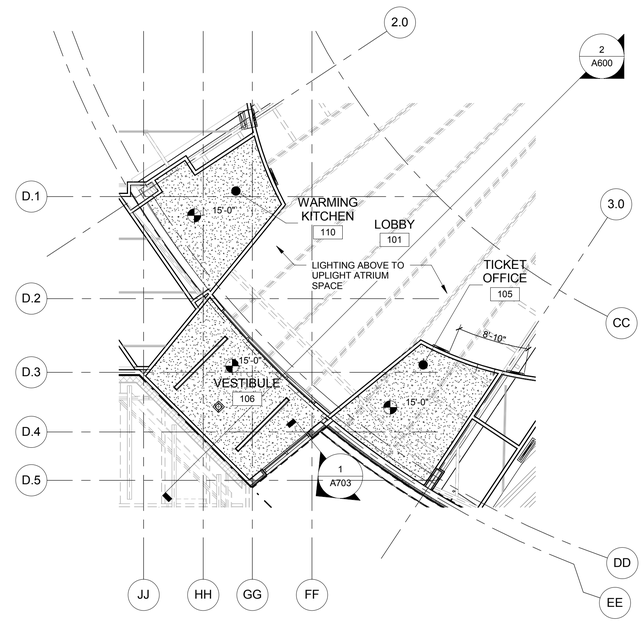

2 LEVEL 1 RCP ABOVE

1/8" = 1'-0"

100% CONSTRUCTION DOCUMENTS

RNL
1050 17th STREET
SUITE A200
DENVER, CO 80265
303 295 1717 t
303 292 0845 f

REFERENCES – BENCHMARKS

BY	REVISIONS	DATE

ARCHITECT'S SEAL

REGISTERED ARCHITECT — KIMBERLY A. MEES — 12937 — STATE OF TEXAS

02/05/2016

100% CONSTRUCTION DOCUMENTS

SCALE
HOR: SHOWN
VER: SHOWN

DATE 05/04/16
DESIGN BY Designer
DRAWN BY Author
CHKD BY Checker
APPD BY Approver

PROJECT NAME

NORTHGATE TRANSFER CENTER

EL PASO, TEXAS.

CITY OF EL PASO
CAPITAL IMPROVEMENT DEPARTMENT

SHEET TITLE

TRANSFER CENTER ENLARGED RCP

SHEET
A302

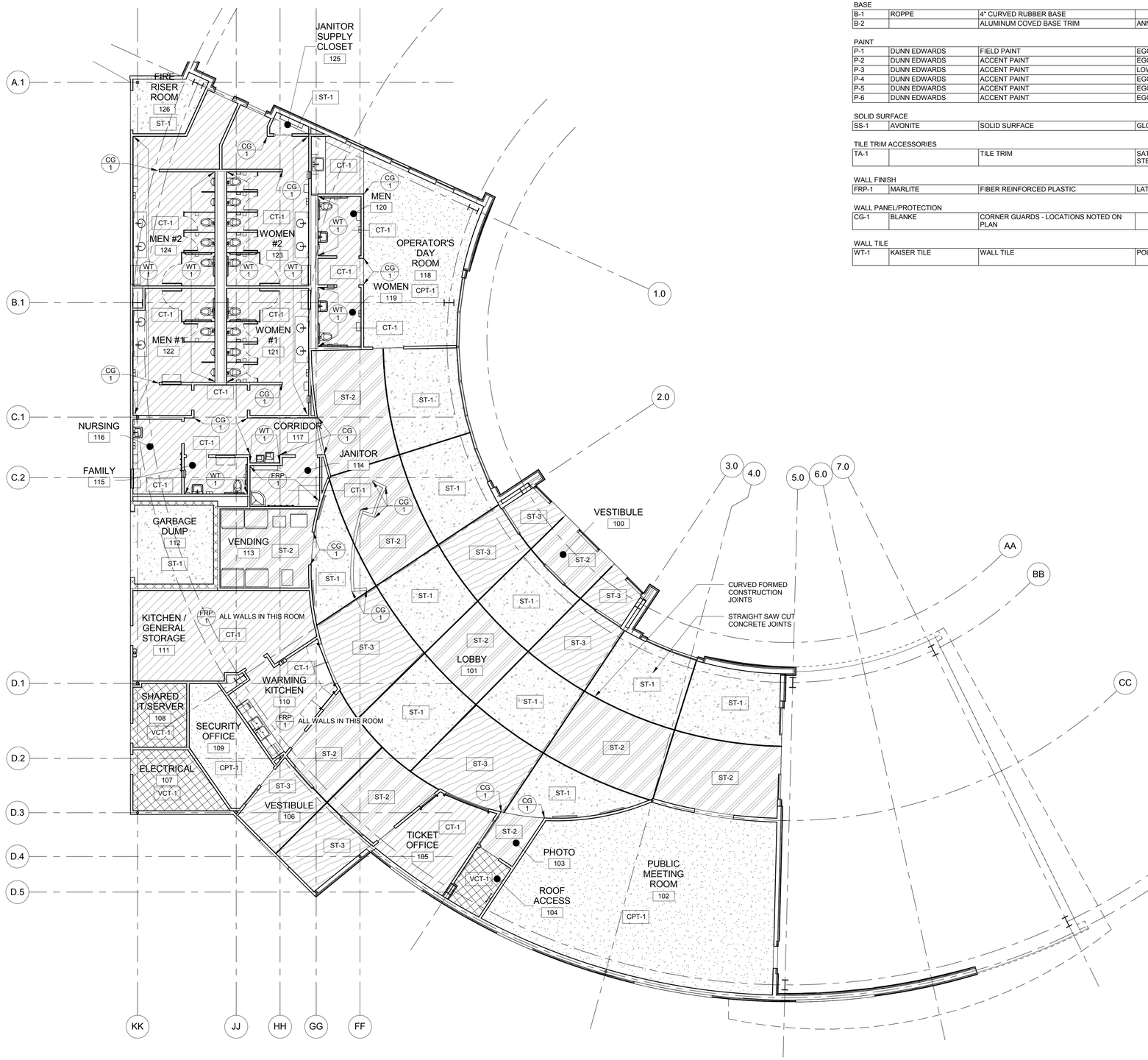

1 LEVEL 1 FINISH PLAN

1/8" = 1'-0"

GENERAL FINISHES - LEGEND

TYPE	MANUFACTURER	DESCRIPTION	FINISH	COLOR	NOTES
BASE					
B-1	ROPPE	4" CURVED RUBBER BASE		114 LUNAR DUST	
B-2		ALUMINUM COVED BASE TRIM	ANNODIZED MATTE		
PAINT					
P-1	DUNN EDWARDS	FIELD PAINT	EGGSHELL	DE6225 FOSSIL	
P-2	DUNN EDWARDS	ACCENT PAINT	EGGSHELL	DE5767 STAR CITY	
P-3	DUNN EDWARDS	ACCENT PAINT	LOW SHEEN	DEC786 MINER'S DUST	
P-4	DUNN EDWARDS	ACCENT PAINT	EGGSHELL	DE5271 GINGER SPICE	
P-5	DUNN EDWARDS	ACCENT PAINT	EGGSHELL	DEC757 RINCON COVE	
P-6	DUNN EDWARDS	ACCENT PAINT	EGGSHELL	BLACK	
SOLID SURFACE					
SS-1	AVONITE	SOLID SURFACE	GLOSS	PEARL K3-8343	
TILE TRIM ACCESSORIES					
TA-1		TILE TRIM	SATIN ALUMINUM, STAINLESS STEEL		
WALL FINISH					
FRP-1	MARLITE	FIBER REINFORCED PLASTIC	LATEX EGGSHELL	P100 WHITE	-
WALL PANEL/PROTECTION					
CG-1	BLANKE	CORNER GUARDS - LOCATIONS NOTED ON PLAN		BRUSHED STAINLESS STEEL	48" HIGH, 3" WIDE
WALL TILE					
WT-1	KAISER TILE	WALL TILE	POLISHED	SWEET SIXTEEN ROCK CANDY, GROUT COLOR: MAIPAI PEARL GRAY #19	AS SHOWN

FLOOR MATERIALS - LEGEND

CPT-1	FIELD CARPET
CT-1	CERAMIC TILE FLOORING
ST-1	CHEMICAL STAIN ON CONCRETE
ST-2	CHEMICAL STAIN ON CONCRETE
ST-3	CHEMICAL STAIN ON CONCRETE
VCT-1	VINYL COMPOSITION TILE

FINISH LEGEND

CPT-1 | ST-1

CT-1 | ST-2

VCT-1 | ST-3

XX / # WALL FINISH TAG

XX-# FLOOR FINISH TAG

FINISH NOTES

1	REFERENCE SPECIFICATIONS AND SHEET A416 FOR FINISH LEGEND AND SPECIFICATIONS.
2	ALL INTERIOR PARTITIONS AND COLUMNS SHALL BE P-1, U.N.O.
3	BASE B-1 SHALL BE USED THROUGHOUT, U.N.O.
4	ALL ROOMS WITH FLOOR CT-1 TO HAVE BASE B-2.
5	GENERAL CONTRACTOR TO PREPARE FLOOR AND INSTALL ADHESIVES, FLOORING MATERIALS AND BASE.
6	REFER TO REFLECTED CEILING PLANS FOR EXTENT OF DRYWALL CEILING SHALL BE PAINTED. ALL DRYWALL CEILINGS AND SOFFITS SHALL BE FLAT FINISH.
7	SCHEDULED FLOOR FINISH SHALL CONTINUE UNDER CASEWORK WITH ATTACHED TOE KICKS, EQUIPMENT, AND FREESTANDING FURNITURE.
8	ALL FLOORING TRANSITIONS TO OCCUR AT CENTERLINE OF DOORWAYS, U.N.O.
9	WALL TEXTURE TO BE LEVEL 4 WALL FINISH, U.N.O. CEILING TO BE LEVEL 5 FINISH, U.N.O.
10	REFER TO ELEVATIONS, DETAILS AND FINISH PLANS FOR EXTENT OF ALL FINISH DESIGNATIONS.
11	TERMINATE PAINT AT EDGE OF GLASS WHERE APPLICABLE.
12	ALL PARTITIONS IN WET AREAS SHALL BE PAINTED WITH A SEMI-GLOSS FINISH.
13	ALL ACCESS PANELS SHALL BE PAINTED WITH ELECTROSTATIC PAINT TO MATCH ADJACENT FINISH.

100% CONSTRUCTION DOCUMENTS

RNL
1050 17th STREET
SUITE A200
DENVER, CO 80265
303 295 1717 t
303 292 0845 f

REFERENCES – BENCHMARKS

BY	REVISIONS	DATE

ARCHITECTS SEAL

REGISTERED ARCHITECT KIMBERLY ANN MEEK 12937 STATE OF TEXAS

02/05/2016

100% CONSTRUCTION DOCUMENTS

SCALE
HOR: SHOWN
VER: SHOWN

DATE 05/04/16
DESIGN BY Designer
DRAWN BY Author
CHKD BY Checker
APPD BY Approver

PROJECT NAME

NORTHGATE TRANSFER CENTER

EL PASO, TEXAS.

CITY OF EL PASO

CAPITAL IMPROVEMENT DEPARTMENT

SHEET TITLE

TRANSFER CENTER FLOOR FINISH PLAN - LEVEL 1

SHEET

A400

PARTITIONS - LIMITING WALL HEIGHT AND TEST REFERENCES				
PARTITION TYPE	FIRE TEST REFERENCE	SOUND TEST REFERENCE	SSMA STUD TYPE	LWH TABLE
A092	N/A			1-16
A093	N/A	NBC S7a	-	1-16
A491	N/A			2-16
A492	N/A			2-16
F011	N/A			N/A
F112	N/A			N/A
F113	N/A			N/A

PARTITIONS - LIMITING WALL HEIGHT AND TEST REFERENCES				
PARTITION TYPE	FIRE TEST REFERENCE	SOUND TEST REFERENCE	SSMA STUD TYPE	LWH TABLE
F114	N/A	N/A	-	N/A
M002	N/A			N/A
S052	N/A			2-16
S054	N/A			2-16
S056	N/A			2-16
S132	N/A			2-16
S134	N/A			2-16
S172	N/A	N/A	-	1-16
S442	N/A			2-16

PARTITION NOTES

1. SUBSTITUTE TILE BACKER BOARD (CERTIFIED) FOR GYPSUM BOARD AT AREAS INDICATED TO RECEIVE CERAMIC OR PORCELAIN TILE. SEE SPECIFICATION FOR TYPE.
2. PROVIDE BLOCKING AND DRAFT STOPS PER GOVERNING CODES AND AS INDICATED ON DRAWINGS.
3. PROVIDE .093" CONTROL JOINTS AT 30' ON CENTER AT STRAIGHT, UNBROKEN GYPSUM BOARD WALLS PER ASTM C 840 AND SPECIFICATION.
4. PROVIDE FIRE-RESISTANCE RATED ACCESS PANELS AND FRAMES IN FIRE RESISTANCE RATED GYPSUM BOARD WALLS WHERE REQUIRED TO ACCESS MECHANICAL EQUIPMENT, PLUMBING EQUIPMENT, DAMPERS, VALVES AND FILTERS. SEE MECHANICAL DRAWINGS.
5. FOR WOOD FRAMED WALLS (IF INDICATED ON SHEET A-601), PROVIDE DOUBLE SILL PLATES AT ALL WALLS WHERE ADJACENT FLOORS ARE TO RECEIVE TOPPING SLABS OR SELF-LEVELING TOPPINGS.
6. SEE STRUCTURAL DRAWINGS FOR SHEAR WALL LOCATIONS AND DETAILS. WHERE STRUCTURAL SHEATHING IS REQUIRED FOR SHEAR IN DOUBLE STUD WALLS, PLACE THE STRUCTURAL SHEATHING ON THE OUTSIDE FACE OF STUDS IMMEDIATELY BEHIND GYPSUM BOARD, NOT IN STUD CAVITY.
7. SEE SHEET A-602 FOR ALLOWABLE SLIP-TYPE HEAD DETAILS.
8. AT SLIP-TYPE HEAD CONDITIONS, ALLOW FOR ___ INCHES OF DEFLECTION (CONFIRM WITH STRUCTURAL ENGINEER)
9. USE LIMITING WALL HEIGHT TABLES ON SHEET A-602 FOR ALLOWABLE MINIMUM GAUGE OF METAL STUDS.
10. ALL DIMENSIONS ARE TO FINISHED FACE OF GYPSUM BOARD UNLESS OTHERWISE NOTED AND DO NOT INCLUDE APPLIED FINISHES.
11. PARTITION TYPE DIAGRAMS DO NOT INCLUDE FINISHES. SEE FINISH SCHEDULES, INTERIOR ELEVATIONS AND/ OR INTERIOR DESIGN DRAWINGS FOR APPLIED FINISH INFORMATION.
12. SEE STRUCTURAL DRAWINGS FOR ATTACHMENT, BRACING, REINFORCING AND GROUTING OF CMU PARTITIONS.
13. PROVIDE PENETRATION FIRE STOPPING AT ALL LOCATIONS WHERE PIPES, CONDUIT, ETC. PASS THROUGH FIRE RESISTANCE RATED CONSTRUCTION.
14. PROVIDE FIRE/ SMOKE DAMPERS AT ALL LOCATIONS WHERE DUCTS PASS THROUGH FIRE RESISTANCE RATED PARTITIONS, SEE MECHANICAL.
15. FRAME HINGE OR LATCH FACE OF DOOR FRAMES 4" FROM ANY PERPENDICULAR WALL UNLESS DIMENSIONED OTHERWISE.

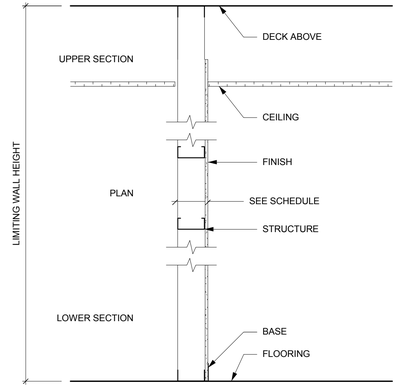

DIAGRAM S12

PARTITION DIAGRAM S12 - STANDARD

3/4" = 1'-0"

PARTITION DIAGRAM S12 - STANDARD						
PARTITION TYPE	DESCRIPTION	OVERALL WIDTH	STUD SPACING	HEAD OF WALL	FIRE RATING	STC RATING
S442	3 5/8" STUDS W/ 1 LAYER GB ONE SIDE	4 1/4"	16	6" ABOVE CEILING	NR	

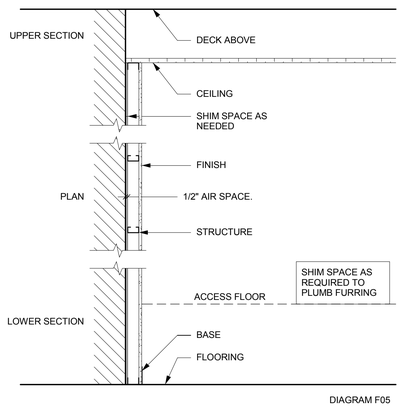

DIAGRAM F05

PARTITION DIAGRAM F05 - FURRING

3/4" = 1'-0"

PARTITION DIAGRAM F05 - FURRING						
PARTITION TYPE	DESCRIPTION	OVERALL WIDTH	STUD SPACING	HEAD OF WALL	FIRE RATING	STC RATING
F112	3 5/8" STUDS W/ 1 LAYER GB	4 1/4"	16	CEILING	NR	
F113	3 5/8" STUDS W/ 1 LAYER GB	4 5/8"	16	CEILING	NR	
F114	6" STUDS W/ 1 LAYER GB, 0.5" AIR SPACE	6 5/8"	16	CEILING	NR	NR

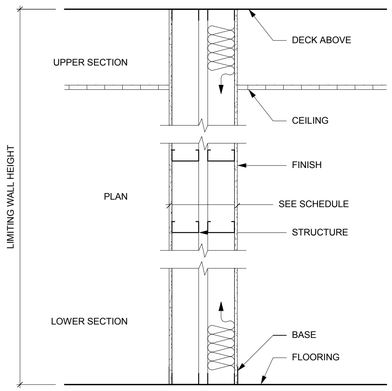

DIAGRAM A42

PARTITION DIAGRAM A42 - ACOUSTIC

3/4" = 1'-0"

PARTITION DIAGRAM A42 - ACOUSTIC						
PARTITION TYPE	DESCRIPTION	OVERALL WIDTH	STUD SPACING	HEAD OF WALL	FIRE RATING	STC RATING
A491	2 ROWS ALIGNED 3 5/8" STUDS & TRACK, 13" AIR, W/ 1 LAYER GB EACH SIDE	1'-9 1/2"	16	DECK	NR	(55?)
A492	2 ROWS ALIGNED 3 5/8" STUDS & TRACK, 8.5" AIR, W/ 1 LAYER GB EACH SIDE	1'-5"	16	DECK	NR	(55?)

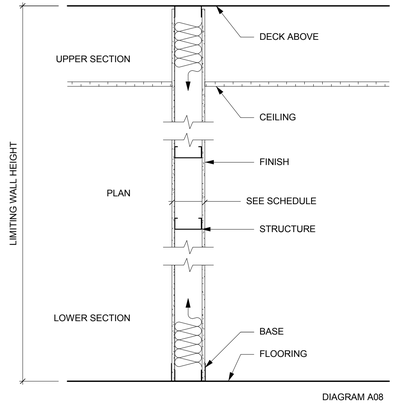

DIAGRAM A08

PARTITION DIAGRAM A08 - ACOUSTIC

3/4" = 1'-0"

PARTITION DIAGRAM A08 - ACOUSTIC						
PARTITION TYPE	DESCRIPTION	OVERALL WIDTH	STUD SPACING	HEAD OF WALL	FIRE RATING	STC RATING
A092	3 5/8" STUDS W/ 1 LAYER GB EACH SIDE, FIBERGLASS INSUL	4 7/8"	16	DECK	NR	47
A093	6" STUDS W/ 1 LAYER GB EACH SIDE, FIBERGLASS INSUL	7 1/4"	16	DECK	NR	51

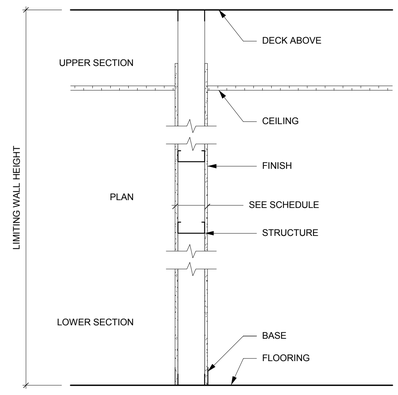

DIAGRAM S02

PARTITION DIAGRAM S02 - STANDARD

3/4" = 1'-0"

PARTITION DIAGRAM S02 - STANDARD						
PARTITION TYPE	DESCRIPTION	OVERALL WIDTH	STUD SPACING	HEAD OF WALL	FIRE RATING	STC RATING
S052	3 5/8" STUDS W/ 1 LAYER GB EACH SIDE	4 7/8"	16	6" ABOVE CEILING	NR	
S054	6" STUDS W/ 1 LAYER GB EACH SIDE	7 1/4"	16	6" ABOVE CEILING	NR	

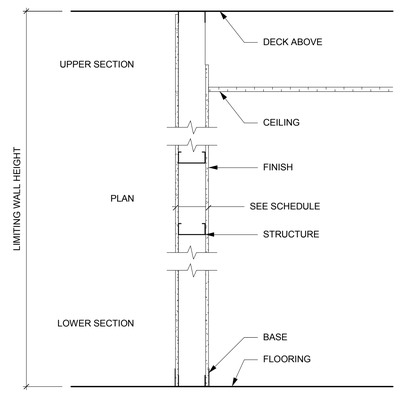

DIAGRAM S02.1

PARTITION DIAGRAM S02.1 - STANDARD

3/4" = 1'-0"

PARTITION DIAGRAM S02.1 - STANDARD						
PARTITION TYPE	DESCRIPTION	OVERALL WIDTH	STUD SPACING	HEAD OF WALL	FIRE RATING	STC RATING
S056	3 5/8" STUDS W/ 1 LAYER GB EACH SIDE	4 7/8"	16	6" ABOVE CEILING & DECK	NR	

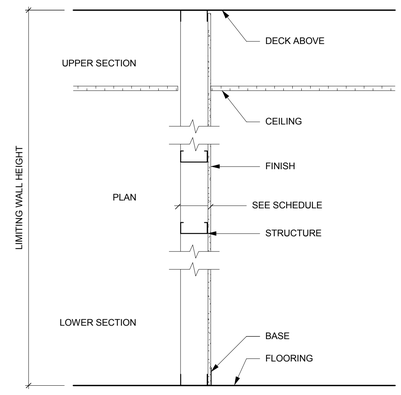

DIAGRAM S04

PARTITION DIAGRAM S04 - STANDARD

3/4" = 1'-0"

PARTITION DIAGRAM S04 - STANDARD						
PARTITION TYPE	DESCRIPTION	OVERALL WIDTH	STUD SPACING	HEAD OF WALL	FIRE RATING	STC RATING
S132	3 5/8" STUDS W/ 1 LAYER GB ONE SIDE	4 1/4"	16	DECK	NR	
S134	6" STUDS W/ 1 LAYER GB ONE SIDE	6 5/8"	16	DECK	NR	

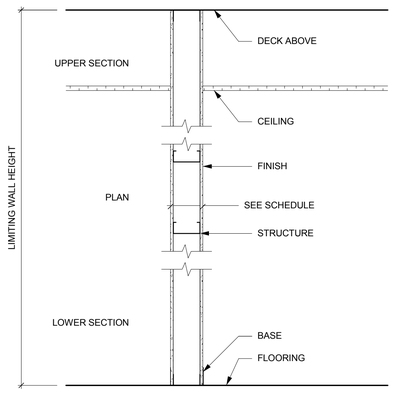

DIAGRAM S05

PARTITION DIAGRAM S05 - STANDARD

3/4" = 1'-0"

PARTITION DIAGRAM S05 - STANDARD						
PARTITION TYPE	DESCRIPTION	OVERALL WIDTH	STUD SPACING	HEAD OF WALL	FIRE RATING	STC RATING
S172	3 5/8" STUDS W/ 1 LAYER GB EACH SIDE	4 7/8"	16	DECK	NR	NR

100% CONSTRUCTION DOCUMENTS

RNL
1050 17th STREET
SUITE A200
DENVER, CO 80265
303 295 1717 t
303 292 0845 f

REFERENCES — BENCHMARKS

DATE	REVISIONS	BY

ARCHITECT'S SEAL

REGISTERED ARCHITECT — KIRK M. MCDONALD — 12937 — STATE OF TEXAS

02/05/2016

100% CONSTRUCTION DOCUMENTS

SCALE
HOR: SHOWN
VER: SHOWN

DATE 05/4/16
DESIGN BY Designer
DRAWN BY Author
CHKD BY Checker
APPD BY Approver

PROJECT NAME

NORTHGATE TRANSFER CENTER

EL PASO, TEXAS.

CITY OF EL PASO

CAPITAL IMPROVEMENT DEPARTMENT

THE CITY OF EL PASO TEXAS

SHEET TITLE

PARTITION TYPES

SHEET

A410

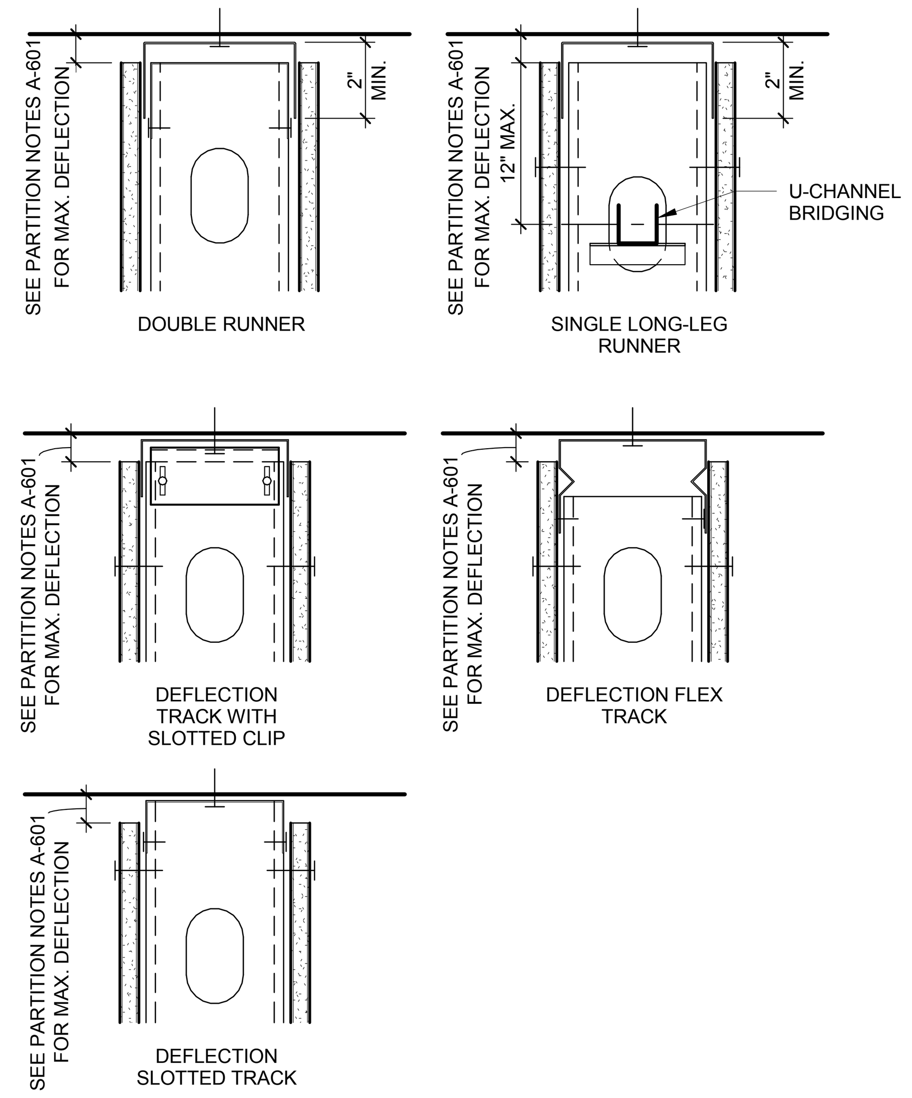

AT RATED WALL CONDITIONS, USE ANY UL XHBN.HW-D SERIES ASSEMBLY APPROPRIATE TO FRAMING SYSTEM AND SUBSTRATE

1 SLIP-TYPE HEAD JOINTS

3" = 1'-0"

LWH TABLE 1-16

FOR NON-STRUCTURAL COMPOSITE PARTITIONS

STUD DEPTH	METAL THICKNESS	LIMITING WALL HEIGHT (LWH) FOR STUD SPACING @ 16 INCHES O.C. — LWH @ 5 PSF @ L/240 — PAINTED WALLS (SEE LWH TABLE NOTE 1)	LWH @ 5 PSF @ L/360 — TILED WALLS (SEE LWH TABLE NOTE 2)
2-1/2"	18 MIL (25 GAGE)	11'-3"	9'-9"
	30 MIL (20 DW GAGE)	12'-0"	10'-6"
	33 MIL (20 ST GAGE)	12'-9"	11'-0"
	43 MIL (18 GAGE)	14'-9"	12'-9"
3-5/8"	18 MIL (25 GAGE)	14'-3"	12'-3"
	30 MIL (20 DW GAGE)	15'-6"	13'-6"
	33 MIL (20 ST GAGE)	16'-3"	14'-3"
	43 MIL (18 GAGE)	18'-0"	15'-6"
	54 MIL (16 GAGE)	19'-6"	17'-0"
	68 MIL (14 GAGE)	20'-0"	17'-3"
6"	18 MIL (25 GAGE)	19'-9"	17'-9"
	30 MIL (20 DW GAGE)	23'-0"	20'-3"
	33 MIL (20 ST GAGE)	24'-6"	21'-3"
	43 MIL (18 GAGE)	28'-3"	24'-6"
	54 MIL (16 GAGE)	30'-0"	26'-0"
	68 MIL (14 GAGE)	32'-0"	28'-0"
8"	43 MIL (18 GAGE)	34'-3"	30'-0"
	54 MIL (16 GAGE)	36'-6"	32'-0"
	68 MIL (14 GAGE)	39'-9"	34'-9"

LWH TABLE NOTES:
1. USE "PAINTED WALLS" COLUMN FOR WALLS LEFT UNFINISHED, WALLS PAINTED, OR WALLS RECEIVING ADHERED TILE 4" IN GREATEST LENGTH OR WIDTH DIMENSION.
2. USE "TILED WALLS" COLUMN FOR WALLS RECEIVING ADHERED TILE GREATER THAN 4" IN ANY LENGTH OR WIDTH DIMENSION.

LWH TABLE 1-16, NON STRUCTURAL, COMPOSITE

LWH TABLE 2-16

FOR NON-STRUCTURAL NON-COMPOSITE PARTITIONS

STUD DEPTH	METAL THICKNESS	LIMITING WALL HEIGHT (LWH) FOR STUD SPACING @ 16 INCHES O.C. — LWH @ 5 PSF @ L/240 — PAINTED WALLS (SEE LWH TABLE NOTE 1)	LWH @ 5 PSF @ L/360 — TILED WALLS (SEE LWH TABLE NOTE 2)
2-1/2"	18 MIL (25 GAGE)	9'-6"	8'-3"
	27 MIL (22 GAGE)	11'-0"	9'-9"
	30 MIL (20 DW GAGE)	11'-6"	10'-0"
	33 MIL (20 ST GAGE)	11'-9"	10'-3"
	43 MIL (18 GAGE)	13'-0"	11'-3"
3-5/8"	18 MIL (25 GAGE)	12'-3"	10'-9"
	27 MIL (22 GAGE)	14'-6"	12'-6"
	30 MIL (20 DW GAGE)	15'-0"	13'-0"
	33 MIL (20 ST GAGE)	15'-6"	13'-6"
	43 MIL (18 GAGE)	16'-9"	14'-9"
	54 MIL (16 GAGE)	18'-0"	15'-9"
	68 MIL (14 GAGE)	19'-3"	16'-9"
6"	18 MIL (25 GAGE)	22'-3"	19'-6"
	30 MIL (20 DW GAGE)	23'-0"	20'-0"
	33 MIL (20 ST GAGE)	23'-9"	20'-9"
	43 MIL (18 GAGE)	26'-0"	22'-9"
	54 MIL (16 GAGE)	27'-9"	24'-3"
	68 MIL (14 GAGE)	29'-9"	26'-0"
8"	43 MIL (18 GAGE)	33'-0"	28'-9"
	54 MIL (16 GAGE)	35'-6"	31'-0"
	68 MIL (14 GAGE)	38'-0"	33'-3"

LWH TABLE NOTES:
1. USE "PAINTED WALLS" COLUMN FOR WALLS LEFT UNFINISHED, WALLS PAINTED, OR WALLS RECEIVING ADHERED TILE 4" IN GREATEST LENGTH OR WIDTH DIMENSION.
2. USE "TILED WALLS" COLUMN FOR WALLS RECEIVING ADHERED TILE GREATER THAN 4" IN ANY LENGTH OR WIDTH DIMENSION.

LWH TABLE 2-16, NON STRUCTURAL, NON-COMPOSITE

LWH TABLE 3A

FOR INTERIOR SHAFTWALLS UNDER INTERMITTENT AIR PRESSURE LOAD
(E.G. FOR ELEVATORS - NOT FOR STAIRS OR RETURN AIR SHAFTS)

LIMITING WALL HEIGHT (LWH) FOR SHAFTWALL WITH STUD SPACING @ 24 INCHES O.C.

STUD DEPTH	SMOOTH, FLAT SHEET METAL THICKNESS	FIRE RESISTANT RATING	CONCEALED WALLS (SEE NOTE 1) LWH @ PSF @ L/120				PAINTED WALLS (SEE NOTE 2) LWH @ PSF @ L/240				TILED WALLS (SEE NOTE 3) LWH @ PSF @ L/360			
			5 PSF	7.5 PSF	10 PSF	15 PSF	5 PSF	7.5 PSF	10 PSF	15 PSF	5 PSF	7.5 PSF	10 PSF	15 PSF
2-1/2"	18 MIL (25 GAGE)	1 HR	12'-3"	10'-3"	9'-0"	6'-0"	9'-9"	8'-6"	7'-9"	6'-0"	8'-6"	7'-3"	6'-9"	5'-9"
		2 HR	12'-9"	10'-3"	9'-0"	7'-3"	11'-9"	9'-9"	8'-6"	7'-3"	9'-9"	8'-3"	8'-3"	6'-0"
		3 HR	12'-9"	10'-3"	9'-0"	7'-3"	12'-0"	10'-9"	9'-0"	7'-3"	10'-6"	9'-3"	8'-3"	7'-3"
		4 HR	12'-9"	10'-3"	9'-0"	7'-3"	12'-0"	10'-3"	9'-0"	7'-3"	10'-6"	9'-3"	8'-3"	7'-3"
	33 MIL (20 ST GAGE)	1 HR	15'-3"	13'-3"	12'-0"	10'-3"	12'-0"	10'-6"	9'-6"	8'-3"	10'-9"	9'-0"	8'-3"	7'-3"
		2 HR	16'-9"	14'-3"	12'-9"	11'-0"	12'-9"	11'-0"	9'-9"	8'-6"	11'-0"	9'-6"	8'-6"	7'-3"
		3 HR	17'-3"	15'-0"	13'-6"	11'-0"	13'-9"	12'-0"	10'-9"	9'-6"	12'-0"	10'-6"	9'-6"	8'-3"
		4 HR	17'-3"	15'-9"	13'-6"	11'-0"	13'-9"	13'-3"	12'-0"	10'-6"	12'-0"	11'-6"	10'-6"	9'-3"
4"	18 MIL (25 GAGE)	1 HR	16'-9"	13'-9"	10'-3"	6'-0"	14'-3"	12'-3"	10'-3"	6'-9"	12'-3"	10'-9"	9'-3"	6'-9"
		2 HR	16'-9"	13'-9"	11'-9"	8'-0"	16'-0"	13'-6"	11'-9"	8'-0"	13'-6"	11'-6"	10'-3"	8'-0"
		3 HR	16'-9"	13'-9"	11'-9"	9'-6"	16'-6"	14'-3"	11'-9"	9'-6"	14'-3"	12'-3"	11'-6"	9'-6"
		4 HR	16'-9"	13'-9"	11'-9"	9'-6"	16'-6"	12'-3"	11'-9"	9'-6"	14'-3"	12'-3"	11'-9"	9'-6"
	33 MIL (20 ST GAGE)	1 HR	20'-0"	18'-0"	16'-6"	14'-3"	16'-6"	14'-3"	13'-0"	11'-3"	14'-6"	12'-6"	11'-3"	9'-3"
		2 HR	21'-9"	19'-0"	17'-3"	15'-0"	17'-3"	15'-0"	13'-9"	12'-0"	15'-0"	13'-0"	12'-0"	10'-3"
		3 HR	22'-9"	20'-0"	18'-0"	15'-0"	18'-0"	15'-9"	14'-3"	12'-6"	15'-9"	13'-9"	12'-6"	11'-0"
		4 HR	22'-9"	20'-0"	18'-0"	15'-0"	18'-0"	15'-9"	14'-3"	12'-6"	15'-9"	13'-9"	12'-6"	11'-0"
6"	18 MIL (25 GAGE)	1 HR	22'-6"	18'-9"	16'-3"	12'-0"	17'-9"	15'-6"	14'-3"	12'-0"	15'-6"	13'-6"	12'-3"	10'-9"
		2 HR	22'-9"	18'-9"	16'-3"	12'-0"	19'-6"	17'-0"	15'-6"	12'-0"	17'-0"	15'-0"	13'-6"	11'-9"
		3 HR	22'-9"	18'-9"	16'-3"	12'-0"	19'-6"	17'-0"	15'-6"	12'-0"	17'-0"	15'-0"	13'-6"	11'-9"
		4 HR	- - -	- - -	- - -	- - -	- - -	- - -	- - -	- - -	- - -	- - -	- - -	- - -
	33 MIL (20 ST GAGE)	1 HR	24'-3"	22'-9"	19'-9"	13'-6"	20'-9"	18'-3"	16'-6"	13'-6"	18'-3"	16'-0"	16'-6"	10'-9"
		2 HR	25'-3"	22'-0"	20'-0"	13'-6"	23'-9"	17'-6"	18'-9"	13'-6"	20'-9"	15'-3"	13'-9"	12'-0"
		3 HR	28'-0"	26'-0"	23'-6"	18'-0"	23'-9"	20'-9"	18'-9"	16'-6"	20'-9"	18'-0"	16'-6"	14'-3"
		4 HR	28'-0"	27'-6"	24'-6"	18'-0"	23'-9"	21'-9"	19'-9"	17'-3"	20'-9"	19'-0"	17'-3"	15'-0"

LWH TABLE NOTES:
1. USE "CONCEALED WALLS" COLUMN FOR SHAFTWALLS CONCEALED FROM VIEW.
2. USE "PAINTED WALLS" COLUMN FOR SHAFTWALLS LEFT UNFINISHED, WALLS PAINTED, OR WALLS RECEIVING ADHERED TILE 4" IN GREATEST LENGTH OR WIDTH DIMENSION.
3. USE "TILED WALLS" COLUMN FOR SHAFTWALLS RECEIVING ADHERED TILE GREATER THAN 4" IN ANY LENGTH OR WIDTH DIMENSION.

LWH TABLE 3A, SHAFTWALL, ELEVATORS

R00 by AMV 10y10m06d

LWH TABLE 3B

FOR INTERIOR SHAFTWALLS UNDER INTERMITTENT AIR PRESSURE LOAD
(E.G. FOR STAIRS - NOT FOR ELEVATORS OR RETURN AIR SHAFTS)

LIMITING WALL HEIGHT (LWH) FOR SHAFTWALL WITH STUD SPACING @ 24 INCHES O.C.

STUD DEPTH	SMOOTH, FLAT SHEET METAL THICKNESS	FIRE RESISTANT RATING	CONCEALED WALLS (SEE NOTE 1) LWH @ PSF @ L/120				PAINTED WALLS (SEE NOTE 2) LWH @ PSF @ L/240				TILED WALLS (SEE NOTE 3) LWH @ PSF @ L/360			
			5 PSF	7.5 PSF	10 PSF	15 PSF	5 PSF	7.5 PSF	10 PSF	15 PSF	5 PSF	7.5 PSF	10 PSF	15 PSF
2-1/2"	18 MIL (25 GAGE)	1 HR	12'-3"	10'-3"	9'-0"	6'-0"	9'-9"	8'-6"	7'-9"	6'-0"	8'-6"	7'-3"	6'-9"	5'-9"
		2 HR	12'-9"	10'-3"	9'-0"	7'-3"	11'-9"	9'-9"	8'-6"	7'-3"	9'-9"	8'-3"	7'-3"	6'-0"
		3 HR	12'-9"	10'-3"	9'-0"	7'-3"	12'-0"	10'-3"	9'-0"	7'-3"	10'-6"	9'-3"	8'-3"	7'-3"
		4 HR	12'-9"	10'-3"	9'-0"	7'-3"	12'-0"	10'-3"	9'-0"	7'-3"	10'-6"	9'-3"	8'-3"	7'-3"
	33 MIL (20 ST GAGE)	1 HR	15'-0"	13'-3"	12'-0"	10'-3"	12'-0"	10'-6"	9'-6"	8'-3"	10'-6"	9'-0"	8'-3"	7'-3"
		2 HR	16'-9"	14'-3"	12'-9"	11'-0"	12'-9"	11'-0"	9'-9"	8'-6"	11'-0"	9'-6"	8'-6"	7'-3"
		3 HR	17'-3"	15'-0"	13'-6"	11'-0"	13'-9"	12'-0"	10'-9"	9'-6"	12'-0"	10'-6"	9'-6"	8'-3"
		4 HR	17'-3"	15'-9"	13'-6"	11'-0"	15'-3"	13'-3"	12'-0"	10'-6"	13'-3"	11'-6"	10'-6"	9'-3"
4"	18 MIL (25 GAGE)	1 HR	16'-9"	13'-9"	10'-3"	6'-0"	14'-3"	12'-3"	10'-3"	6'-9"	12'-3"	10'-9"	9'-3"	6'-9"
		2 HR	16'-9"	13'-9"	11'-9"	8'-0"	16'-0"	13'-6"	11'-9"	8'-0"	13'-6"	11'-6"	10'-3"	8'-0"
		3 HR	16'-9"	13'-9"	11'-9"	9'-6"	16'-6"	14'-3"	11'-9"	9'-6"	14'-3"	12'-3"	11'-6"	9'-6"
		4 HR	16'-9"	13'-9"	11'-9"	9'-6"	16'-9"	- - -	11'-9"	9'-6"	14'-3"	12'-3"	11'-9"	9'-6"
	33 MIL (20 ST GAGE)	1 HR	20'-0"	18'-0"	16'-6"	14'-3"	16'-6"	14'-3"	13'-0"	11'-3"	14'-3"	12'-6"	11'-3"	9'-3"
		2 HR	21'-9"	19'-0"	17'-3"	15'-0"	17'-3"	15'-0"	13'-9"	12'-0"	15'-0"	13'-0"	12'-0"	10'-3"
		3 HR	22'-9"	20'-0"	18'-0"	15'-0"	18'-0"	15'-9"	14'-3"	12'-6"	15'-9"	13'-9"	12'-6"	11'-0"
		4 HR	22'-9"	20'-0"	18'-0"	15'-0"	18'-0"	15'-9"	14'-3"	12'-6"	15'-9"	13'-9"	12'-6"	11'-0"
6"	18 MIL (25 GAGE)	1 HR	22'-6"	18'-9"	16'-3"	12'-0"	17'-9"	15'-6"	14'-3"	12'-0"	15'-6"	13'-6"	12'-3"	10'-9"
		2 HR	22'-9"	18'-9"	16'-3"	12'-0"	19'-6"	17'-0"	15'-6"	12'-0"	17'-0"	15'-0"	13'-6"	11'-9"
		3 HR	22'-9"	18'-9"	16'-3"	12'-0"	19'-6"	17'-0"	15'-6"	12'-0"	17'-0"	15'-0"	13'-6"	11'-9"
		4 HR	- - -	- - -	- - -	- - -	- - -	- - -	- - -	- - -	- - -	- - -	- - -	- - -
	33 MIL (20 ST GAGE)	1 HR	24'-0"	22'-9"	19'-9"	13'-6"	20'-9"	18'-3"	16'-6"	13'-6"	18'-3"	16'-0"	14'-6"	10'-9"
		2 HR	25'-3"	22'-0"	20'-0"	13'-6"	23'-9"	17'-6"	18'-9"	13'-6"	20'-9"	15'-3"	13'-9"	12'-0"
		3 HR	28'-0"	26'-0"	23'-6"	18'-0"	23'-9"	20'-9"	18'-9"	16'-6"	20'-9"	18'-0"	16'-6"	14'-3"
		4 HR	28'-0"	27'-6"	24'-6"	18'-0"	25'-0"	21'-9"	19'-9"	17'-3"	21'-9"	19'-0"	17'-3"	15'-0"

LWH TABLE NOTES:
1. USE "CONCEALED WALLS" COLUMN FOR SHAFTWALLS CONCEALED FROM VIEW.
2. USE "PAINTED WALLS" COLUMN FOR SHAFTWALLS LEFT UNFINISHED, WALLS PAINTED, OR WALLS RECEIVING ADHERED TILE 4" IN GREATEST LENGTH OR WIDTH DIMENSION.
3. USE "TILED WALLS" COLUMN FOR SHAFTWALLS RECEIVING ADHERED TILE GREATER THAN 4" IN ANY LENGTH OR WIDTH DIMENSION.

LWH TABLE 3B, SHAFTWALL, STAIRS

R00 by AMV 10y10m06d

LWH TABLE 3C

FOR INTERIOR SHAFTWALLS UNDER SUSTAINED AIR PRESSURE LOAD
(E.G. FOR STAIRS - NOT FOR ELEVATORS OR RETURN AIR SHAFTS)

LIMITING WALL HEIGHT (LWH) FOR SHAFTWALL WITH STUD SPACING @ 24 INCHES O.C.

STUD DEPTH	SMOOTH, FLAT SHEET METAL THICKNESS	FIRE RESISTANT RATING	CONCEALED WALLS (SEE NOTE 1) LWH @ PSF @ L/120				PAINTED WALLS (SEE NOTE 2) LWH @ PSF @ L/240				TILED WALLS (SEE NOTE 3) LWH @ PSF @ L/360			
			5 PSF	7.5 PSF	10 PSF	15 PSF	5 PSF	7.5 PSF	10 PSF	15 PSF	5 PSF	7.5 PSF	10 PSF	15 PSF
2-1/2"	18 MIL (25 GAGE)	1 HR	13'-3"	11'-6"	10'-0"	8'-3"	10'-6"	9'-3"	8'-3"	7'-3"	9'-3"	8'-0"	7'-3"	6'-0"
		2 HR	13'-9"	12'-0"	11'-0"	8'-3"	11'-0"	9'-6"	8'-6"	7'-3"	8'-9"	8'-3"	7'-3"	6'-0"
		3 HR	15'-6"	13'-3"	11'-6"	9'-3"	12'-3"	10'-9"	9'-9"	8'-6"	10'-9"	9'-3"	8'-6"	7'-6"
		4 HR	- - -	- - -	- - -	- - -	- - -	- - -	- - -	- - -	- - -	- - -	- - -	- - -
	33 MIL (20 ST GAGE)	1 HR	15'-0"	13'-3"	12'-0"	10'-6"	12'-0"	10'-6"	9'-6"	8'-3"	10'-6"	9'-0"	8'-3"	7'-3"
		2 HR	16'-6"	14'-3"	12'-9"	11'-0"	12'-9"	11'-0"	9'-9"	8'-6"	11'-0"	9'-6"	8'-6"	7'-3"
		3 HR	17'-3"	15'-0"	13'-9"	12'-0"	13'-9"	12'-0"	10'-9"	9'-6"	12'-0"	10'-6"	9'-6"	8'-3"
		4 HR	- - -	- - -	- - -	- - -	- - -	- - -	- - -	- - -	- - -	- - -	- - -	- - -
4"	18 MIL (25 GAGE)	1 HR	17'-9"	14'-9"	12'-3"	8'-0"	14'-3"	12'-3"	11'-3"	8'-0"	12'-3"	10'-9"	9'-3"	8'-0"
		2 HR	19'-6"	15'-9"	12'-3"	8'-0"	16'-0"	11'-9"	11'-9"	8'-0"	11'-9"	10'-6"	9'-3"	8'-0"
		3 HR	19'-6"	15'-9"	13'-9"	11'-3"	16'-6"	14'-3"	13'-0"	11'-3"	14'-3"	12'-6"	11'-6"	11'-3"
		4 HR	- - -	- - -	- - -	- - -	- - -	- - -	- - -	- - -	- - -	- - -	- - -	- - -
	33 MIL (20 ST GAGE)	1 HR	20'-0"	18'-0"	16'-6"	14'-3"	16'-6"	14'-3"	13'-0"	11'-3"	14'-3"	12'-6"	11'-3"	9'-3"
		2 HR	22'-3"	19'-6"	17'-6"	15'-3"	17'-6"	15'-6"	14'-0"	10'-6"	15'-6"	11'-9"	10'-6"	9'-3"
		3 HR	23'-6"	20'-6"	18'-9"	15'-6"	18'-9"	16'-3"	14'-9"	13'-0"	16'-3"	14'-3"	13'-0"	11'-3"
		4 HR	- - -	- - -	- - -	- - -	- - -	- - -	- - -	- - -	- - -	- - -	- - -	- - -
6"	18 MIL (25 GAGE)	1 HR	22'-6"	18'-9"	16'-3"	12'-0"	17'-9"	15'-6"	14'-3"	12'-0"	15'-6"	13'-6"	12'-3"	10'-9"
		2 HR	22'-9"	18'-9"	16'-3"	12'-0"	19'-6"	17'-0"	15'-6"	12'-0"	17'-0"	15'-0"	13'-6"	11'-9"
		3 HR	22'-9"	18'-9"	16'-3"	12'-0"	19'-6"	17'-0"	15'-6"	12'-0"	17'-0"	15'-0"	13'-6"	11'-9"
		4 HR	- - -	- - -	- - -	- - -	- - -	- - -	- - -	- - -	- - -	- - -	- - -	- - -
	33 MIL (20 ST GAGE)	1 HR	24'-0"	22'-9"	19'-9"	13'-6"	20'-9"	18'-3"	16'-6"	13'-6"	18'-3"	16'-0"	14'-6"	10'-9"
		2 HR	28'-0"	24'-9"	20'-6"	13'-6"	22'-6"	19'-9"	17'-9"	12'-6"	19'-9"	13'-6"	12'-3"	10'-9"
		3 HR	30'-0"	26'-0"	23'-6"	19'-3"	23'-9"	20'-9"	18'-9"	16'-6"	20'-9"	18'-0"	16'-6"	14'-3"
		4 HR	- - -	- - -	- - -	- - -	- - -	- - -	- - -	- - -	- - -	- - -	- - -	- - -

LWH TABLE NOTES:
1. USE "CONCEALED WALLS" COLUMN FOR SHAFTWALLS CONCEALED FROM VIEW.
2. USE "PAINTED WALLS" COLUMN FOR SHAFTWALLS LEFT UNFINISHED, WALLS PAINTED, OR WALLS RECEIVING ADHERED TILE 4" IN GREATEST LENGTH OR WIDTH DIMENSION.
3. USE "TILED WALLS" COLUMN FOR SHAFTWALLS RECEIVING ADHERED TILE GREATER THAN 4" IN ANY LENGTH OR WIDTH DIMENSION.

LWH TABLE 3C, SHAFTWALL, STAIRS

R00 by AMV 10y10m07d

LWH TABLE 3D

FOR INTERIOR SHAFTWALLS UNDER SUSTAINED AIR PRESSURE LOAD
(E.G. FOR RETURN AIR SHAFTS - NOT FOR ELEVATORS OR STAIRS)

LIMITING WALL HEIGHT (LWH) FOR SHAFTWALL WITH STUD SPACING @ 24 INCHES O.C.

STUD DEPTH	SMOOTH, FLAT SHEET METAL THICKNESS	FIRE RESISTANT RATING	CONCEALED WALLS (SEE NOTE 1) LWH @ PSF @ L/120				PAINTED WALLS (SEE NOTE 2) LWH @ PSF @ L/240				TILED WALLS (SEE NOTE 3) LWH @ PSF @ L/360			
			5 PSF	7.5 PSF	10 PSF	15 PSF	5 PSF	7.5 PSF	10 PSF	15 PSF	5 PSF	7.5 PSF	10 PSF	15 PSF
2-1/2"	18 MIL (25 GAGE)	1 HR	10'-3"	11'-6"	6'-0"	8'-3"	8'-6"	9'-3"	6'-0"	7'-3"	7'-3"	8'-0"	5'-9"	6'-0"
		2 HR	10'-9"	12'-3"	7'-3"	8'-3"	10'-3"	9'-9"	7'-3"	7'-3"	9'-3"	8'-3"	7'-3"	6'-0"
		3 HR	15'-6"	13'-3"	11'-6"	9'-3"	12'-3"	10'-9"	9'-9"	8'-6"	10'-9"	9'-3"	8'-6"	7'-6"
		4 HR	- - -	- - -	- - -	- - -	- - -	- - -	- - -	- - -	- - -	- - -	- - -	- - -
	33 MIL (20 ST GAGE)	1 HR	14'-6"	13'-3"	10'-3"	10'-6"	12'-0"	10'-6"	9'-6"	8'-3"	10'-6"	9'-0"	8'-3"	7'-3"
		2 HR	14'-6"	14'-3"	10'-3"	11'-0"	12'-9"	11'-0"	9'-9"	8'-6"	11'-0"	9'-6"	8'-6"	7'-3"
		3 HR	17'-3"	15'-0"	13'-9"	12'-0"	13'-9"	12'-0"	10'-9"	9'-6"	12'-0"	10'-6"	9'-6"	8'-3"
		4 HR	- - -	- - -	- - -	- - -	- - -	- - -	- - -	- - -	- - -	- - -	- - -	- - -
4"	18 MIL (25 GAGE)	1 HR	13'-9"	14'-9"	6'-9"	8'-0"	13'-3"	12'-3"	6'-9"	8'-0"	11'-6"	11'-6"	6'-9"	8'-0"
		2 HR	13'-9"	15'-9"	9'-6"	8'-0"	13'-9"	13'-6"	9'-6"	8'-0"	12'-3"	11'-0"	9'-6"	8'-0"
		3 HR	19'-6"	15'-9"	13'-9"	11'-3"	16'-6"	14'-3"	13'-0"	11'-3"	14'-3"	12'-6"	11'-6"	11'-3"
		4 HR	- - -	- - -	- - -	- - -	- - -	- - -	- - -	- - -	- - -	- - -	- - -	- - -
	33 MIL (20 ST GAGE)	1 HR	19'-3"	18'-0"	15'-0"	14'-3"	15'-3"	14'-3"	12'-0"	11'-3"	13'-3"	12'-6"	10'-6"	9'-3"
		2 HR	20'-0"	20'-0"	15'-0"	14'-9"	15'-9"	15'-9"	12'-6"	11'-0"	13'-9"	13'-9"	11'-0"	9'-6"
		3 HR	23'-6"	20'-6"	18'-9"	15'-6"	18'-9"	16'-3"	14'-9"	13'-0"	16'-3"	14'-3"	13'-0"	11'-3"
		4 HR	- - -	- - -	- - -	- - -	- - -	- - -	- - -	- - -	- - -	- - -	- - -	- - -
6"	18 MIL (25 GAGE)	1 HR	22'-6"	18'-9"	16'-3"	12'-0"	17'-9"	15'-6"	14'-3"	12'-0"	15'-6"	13'-6"	12'-3"	10'-9"
		2 HR	22'-9"	18'-9"	16'-3"	12'-0"	19'-6"	17'-0"	15'-6"	12'-0"	17'-0"	15'-0"	13'-6"	11'-9"
		3 HR	22'-9"	18'-9"	16'-3"	12'-0"	19'-6"	17'-0"	15'-6"	12'-0"	17'-0"	15'-0"	13'-6"	11'-9"
		4 HR	- - -	- - -	- - -	- - -	- - -	- - -	- - -	- - -	- - -	- - -	- - -	- - -
	33 MIL (20 ST GAGE)	1 HR	24'-0"	22'-9"	13'-6"	13'-6"	20'-9"	18'-3"	13'-6"	13'-6"	18'-3"	16'-0"	13'-6"	10'-9"
		2 HR	27'-6"	23'-9"	18'-0"	13'-6"	21'-9"	19'-9"	17'-3"	12'-9"	19'-0"	17'-3"	12'-9"	11'-0"
		3 HR	30'-0"	26'-0"	23'-6"	19'-3"	23'-9"	20'-9"	18'-9"	16'-6"	20'-9"	18'-0"	16'-6"	14'-3"
		4 HR	- - -	- - -	- - -	- - -	- - -	- - -	- - -	- - -	- - -	- - -	- - -	- - -

LWH TABLE NOTES:
1. USE "CONCEALED WALLS" COLUMN FOR SHAFTWALLS CONCEALED FROM VIEW.
2. USE "PAINTED WALLS" COLUMN FOR SHAFTWALLS LEFT UNFINISHED, WALLS PAINTED, OR WALLS RECEIVING ADHERED TILE 4" IN GREATEST LENGTH OR WIDTH DIMENSION.
3. USE "TILED WALLS" COLUMN FOR SHAFTWALLS RECEIVING ADHERED TILE GREATER THAN 4" IN ANY LENGTH OR WIDTH DIMENSION.

LWH TABLE 3D, SHAFTWALL, RETURN AIR SHAFTS

R00 by AMV 10y10m07d

RNL
1050 17th STREET
SUITE A200
DENVER, CO 80265
303 295 1717 t
303 292 0845 f

100% CONSTRUCTION DOCUMENTS

REFERENCES - BENCHMARKS

REVISIONS | DATE | BY

ARCHITECTS SEAL

02/05/2016

SCALE
HOR: AS SHOWN
VER: AS SHOWN

DATE: 02/05/16
DESIGN BY: Designer
DRAWN BY: Author
CHKD. BY: Checker
APPD. BY: Approver

PROJECT NAME
NORTHGATE TRANSFER CENTER
EL PASO, TEXAS.

CITY OF EL PASO
CAPITAL IMPROVEMENT DEPARTMENT

SHEET TITLE
LIMITING WALL HEIGHT TABLES FOR PARTITIONS

SHEET
A411

DOOR AND FRAME SCHEDULE

NO	HW	DOOR							FRAME			DETAILS			FIRE RATING	NOTES
		SIZE														
NO	HW	W	H	T	TYPE	MATL	FINISH	GLASS	TYPE	MATL	FINISH	HEAD	JAMB	SILL	FIRE RATING	NOTES
101A	001.00	6'-0"	7'-10"	3/4"	FG	AL/GL	ANODIZED	GL-01	F1	AL	ANODIZED	7/A801	9/A413	1/A801		
101B	001.00	6'-0"	7'-10"	3/4"	FG	AL/GL	ANODIZED	GL-01	F1	AL	ANODIZED	7/A801	9/A413	1/A801		
101C	001.00	6'-0"	7'-10"	3/4"	FG	AL/GL	ANODIZED	GL-01	F1	AL	ANODIZED	8/A413	9/A413	4/A413		
101D	001.00	6'-0"	7'-10"	3/4"	FG	AL/GL	ANODIZED	GL-01	F1	AL	ANODIZED	8/A413	9/A413	4/A413		
101E	001.00	6'-0"	7'-10"	3/4"	FG	AL/GL	ANODIZED	GL-01	F1	AL	ANODIZED	7/A801 SIM	9/A413	2/A801		
101F	001.00	6'-0"	7'-11"	3/4"	FG	AL/GL	ANODIZED	GL-01	F1	AL	ANODIZED	13/A413	9/A413	4/A413		
102A	003.00	6'-0"	7'-10"	2"	FG	SCWD/GL	PAINT	GL-04	F1	-	PAINT	7/A413	3/A413	11/A413		CARD READER
102B	004.00	3'-0"	7'-0"	1 3/4"	F	HM	PAINT	-	F1	-	PAINT	14/A413	10/A413	12/A413		
104A	006.00	3'-0"	7'-0"	1 3/4"	F	SCWD	PAINT	-	F1	-	PAINT	5/A413	1/A413	11/A413		
105A	008.00	3'-0"	7'-10"	1 3/4"	F	SCWD	PAINT	-	F1	-	PAINT	5/A413	1/A413	11/A413		CARD READER, BULLET RESISTIVE
105B	-	3'-0"	5'-2"	1"	OH3	STL	PER MFR	-	-	-	-	10/A806 SIM	7/A806 SIM	8/A903 SIM		MOUNT HOOD ABOVE CEILING AND 2" MINIMUM ABOVE ADJACENT HOOD
105C	-	7'-0"	5'-2"	1"	OH3	STL	PER MFR	-	-	-	-	9/A806 SIM	7/A806 SIM	8/A903 SIM		MOUNT HOOD ABOVE CEILING
109	006.00	3'-0"	7'-0"	1 3/4"	F	SCWD	PAINT	-	F1	HM	PAINT	5/A413	1/A413	11/A413		CARD READER
110A	008.00	3'-0"	7'-10"	1 3/4"	F	SCWD	PAINT	-	F1	HM	PAINT	5/A413	1/A413	11/A413		CARD READER
110B	007.00	3'-0"	7'-0"	1"	A	SCWD/ACRYLIC	PAINT	ACRYLIC, PER MFR	F1	HM	PAINT	5/A413	6/A413	11/A413		
110C	-	3'-0"	4'-6"	1"	OH3	STL	PER MFR	-	-	-	-	10/A806 SIM	7/A806 SIM	7/A903 SIM		MOUNT HOOD ABOVE CEILING AND 2" MINIMUM ABOVE ADJACENT HOOD
110D	-	6'-6"	5'-2"	1"	OH3	STL	PER MFR	-	-	-	-	9/A806 SIM	7/A806 SIM	7/A903 SIM		MOUNT HOOD ABOVE CEILING
114	006.00	3'-0"	7'-0"	1 3/4"	F	HM	PAINT	-	F1	HM	PAINT	5/A413	1/A413	11/A413		
115	010.00	3'-0"	7'-0"	1 3/4"	F	SCWD	PAINT	-	F1	HM	PAINT	5/A413	1/A413	11/A413		
116	010.00	3'-0"	7'-0"	1 3/4"	F	SCWD	PAINT	-	F1	HM	PAINT	5/A413	1/A413	11/A413		
118	008.00	3'-0"	7'-10"	1 3/4"	F	SCWD	PAINT	-	F3	HM	PAINT	5/A413	1/A413	11/A413		CARD READER
119	009.00	3'-0"	7'-0"	1 3/4"	F	SCWD	PAINT	-	F1	HM	PAINT	5/A413	1/A413	11/A413		
120	009.00	3'-0"	7'-0"	1 3/4"	F	SCWD	PAINT	-	F1	HM	PAINT	5/A413	1/A413	11/A413		
121	002.00	3'-0"	9'-0"	1"	OH2	STL	PER MFR	-	-	-	-	9/A807 SIM	7/A807 SIM	-		IGNORE COUNTER AND SECURITY GLAZING NOTES, DOOR OPENING AT 7'-0"
122	002.00	3'-0"	9'-0"	1"	OH2	STL	PER MFR	-	-	-	-	9/A807 SIM	7/A807 SIM	-		IGNORE COUNTER AND SECURITY GLAZING NOTES, DOOR OPENING AT 7'-0"
123	002.00	3'-0"	9'-0"	1"	OH1	STL	PER MFR	-	-	-	-	9/A807 SIM	7/A807 SIM	-		IGNORE COUNTER AND SECURITY GLAZING NOTES, DOOR OPENING AT 7'-0"
124	002.00	3'-0"	9'-0"	1"	OH1	STL	PER MFR	-	-	-	-	9/A807 SIM	7/A807 SIM	-		IGNORE COUNTER AND SECURITY GLAZING NOTES, DOOR OPENING AT 7'-0"
125	011.00	2'-6"	7'-0"	1 3/4"	F	SCWD	PER MFR	-	F1	HM	PAINT	5/A413	1/A413	11/A413		

DOOR AND HARDWARE NOTES

1	ALL DOOR FRAMES TO MATCH BUILDING STANDARDS. TO BE PAINTED TO MATCH ADJACENT WALL U.N.O.
2	ALL DOOR TYPES SHOWN MAY NOT BE USED FOR THIS FLOOR.
4	ALL NEW DOORS TO RECEIVE HARDWARE. LEVERSET TO MATCH BASE BUILDING STANDARD. ALL HARDWARE TO BE ADA COMPLIANT AND UL RATED.
5	SECURITY VENDOR TO COORDINATE CARD READER ACCESS WITH BUILDING APPROVED SYSTEM AND TENANT REQUIREMENTS. REFER TO SCHEDULE AND CONSTRUCTION PLANS FOR INTENDED LOCATIONS OF CARD READERS. MOUNT CARD READERS 44” AFF TO CENTERLINE OF DEVICE, TYP. TOP OF CARD READER SHALL NOT BE MOUNTED ABOVE 48” AFF.
6	SECURITY VENDOR SHALL OBTAIN A SEPARATE ACCESS CONTROL PERMIT FROM THE BUILDING DEPARTMENT PRIOR TO INSTALLATION OF ANY ACCESS CONTROL DEVICES OR EQUIPMENT.
7	WHERE INDICATED PROVIDE COAT HOOKS. MOUNT ON WALL BEHIND DOOR AT CENTERLINE OF DOOR, 60” AFF, TYP.
8	KICK PLATES SHALL BE 8” HIGH, STAINLESS STEEL TO MATCH BASE BUILDING FINISH AND SHALL BE APPLIED TO KICK SIDE OF DOOR U.N.O.
9	ALL HARDWARE TYPES SHOWN MAY NOT BE USED FOR THIS FLOOR.
10	ALL LOCKSETS SHALL BE KEYED TO THE BUILDING MASTER. COORDINATE REQUIREMENTS WITH TENANT AND BUILDING OWNER.

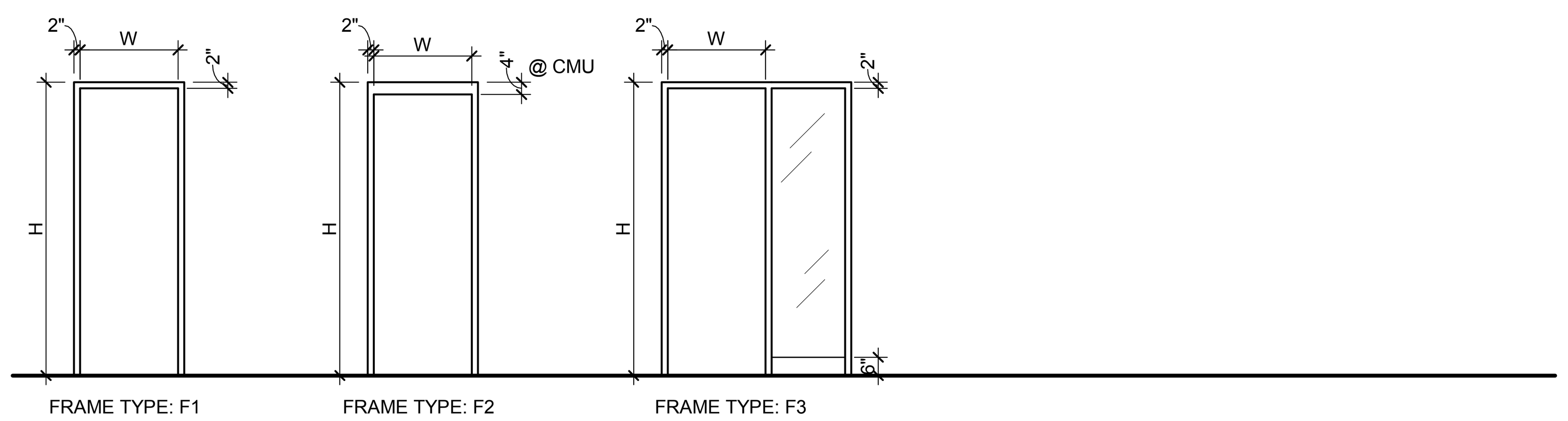

FRAME TYPES (common)

1/4" = 1'-0"

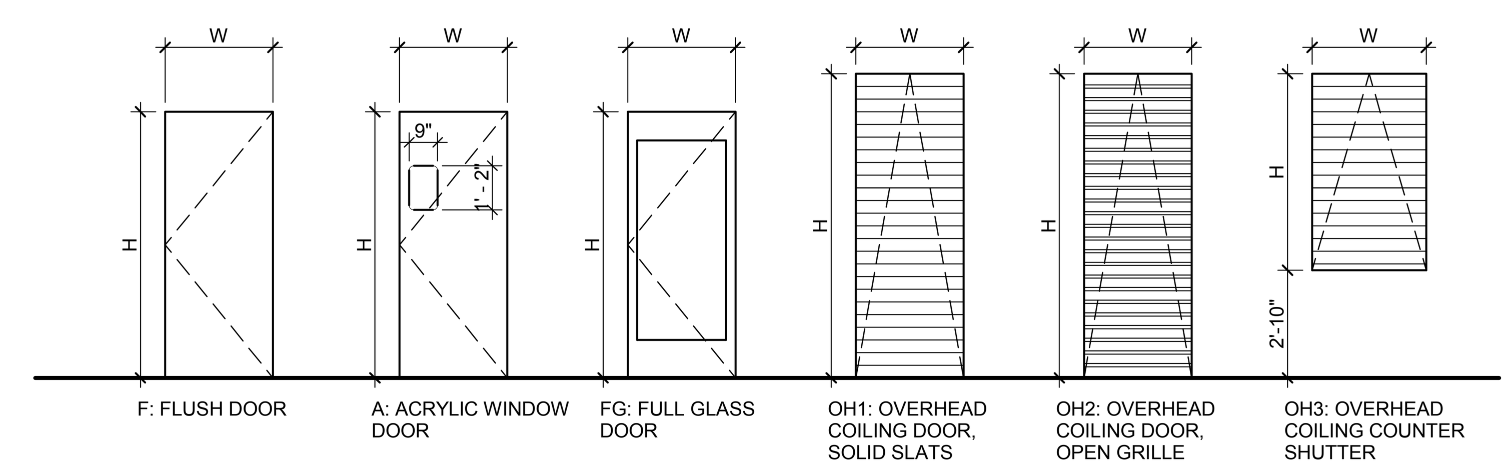

DOOR TYPES (common)

1/4" = 1'-0"

RNL
1050 17th STREET
SUITE A200
DENVER, CO 80265
303 295 1717 t
303 292 0845 f

100% CONSTRUCTION DOCUMENTS

REFERENCES - BENCHMARKS

ARCHITECTS SEAL

02/05/2016

PROJECT NAME

NORTHGATE TRANSFER CENTER

EL PASO, TEXAS.

CITY OF EL PASO

CAPITAL IMPROVEMENT DEPARTMENT

SHEET TITLE

DOOR SCHEDULE

SHEET

A412

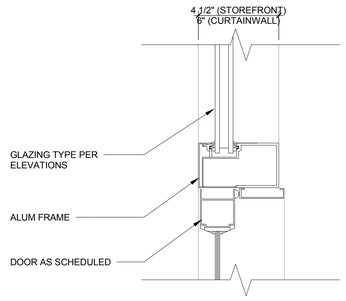

13 ALUM FRAME HEAD
3" = 1'-0"

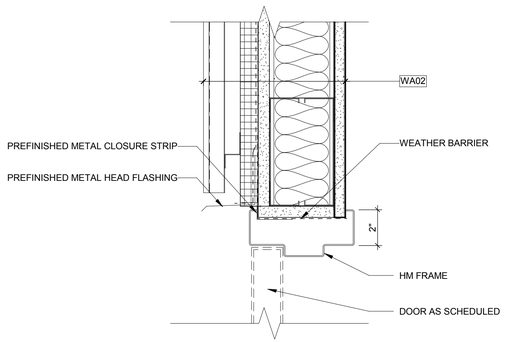

14 HM DOOR HEAD AT HPL
3" = 1'-0"

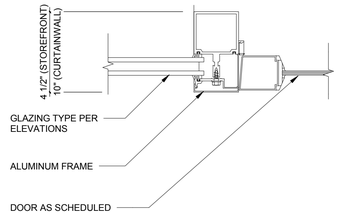

9 ALUM FRAME JAMB
3" = 1'-0"

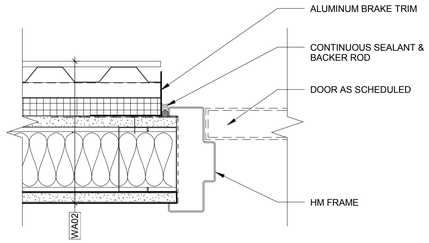

10 HM DOOR JAMB AT HPL
3" = 1'-0"

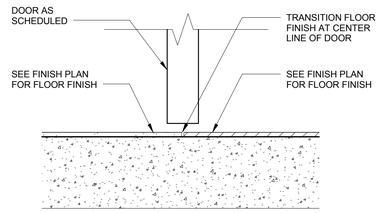

11 INTERIOR DOOR SILL
3" = 1'-0"

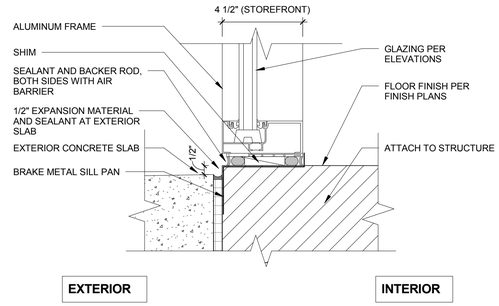

12 (AF) SILL DETAIL - EXTERIOR
3" = 1'-0"

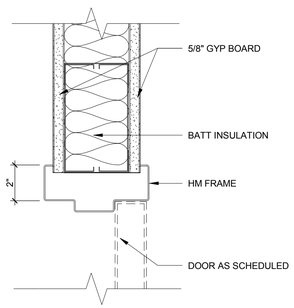

5 HM DOOR HEAD AT GYP
3" = 1'-0"

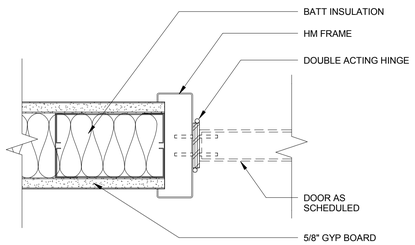

6 HM DOUBLE ACTING DOOR JAMB
3" = 1'-0"

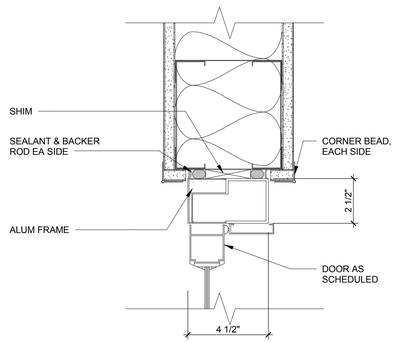

7 ALUM FRAME HEAD AT GYP
3" = 1'-0"

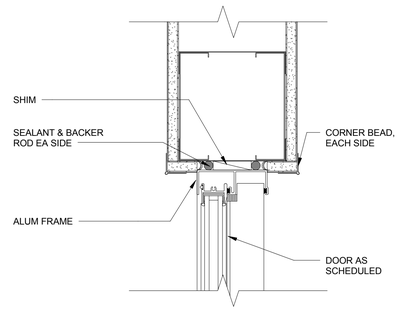

8 SLIDING ALUM FRAME HEAD AT GYP
3" = 1'-0"

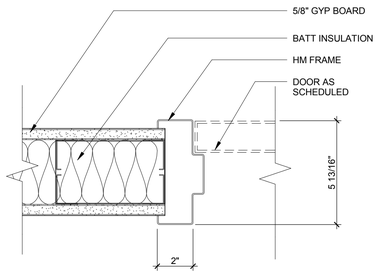

1 HM DOOR JAMB AT GYP
3" = 1'-0"

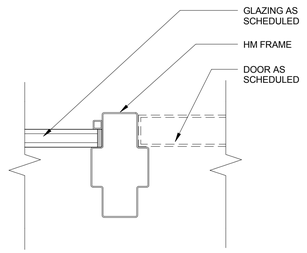

2 HM JAMB AT SIDELIGHT
3" = 1'-0"

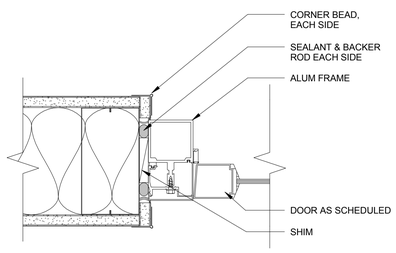

3 ALUM FRAME JAMB AT GYP
3" = 1'-0"

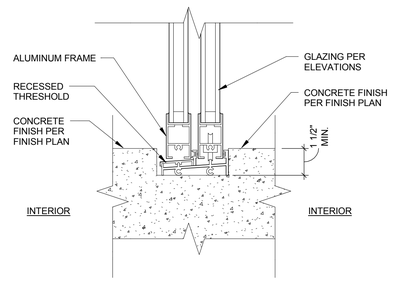

4 ALUM FRAME RECESSED SILL
3" = 1'-0"

100% CONSTRUCTION DOCUMENTS

RNL
1050 17th STREET
SUITE A200
DENVER, CO 80265
303 295 1717 t
303 292 0845 f

REFERENCES – BENCHMARKS

BY	REVISIONS	DATE

ARCHITECT'S SEAL

REGISTERED ARCHITECT · MICHAEL A. RUSSELL · 12937 · STATE OF TEXAS

02/05/2016

100% CONSTRUCTION DOCUMENTS

SCALE
HOR: SHOWN
VER: SHOWN

DATE 05/4/16
DESIGN BY Designer
DRAWN BY Author
CHKD BY Checker
APPD BY Approver

PROJECT NAME
NORTHGATE TRANSFER CENTER
EL PASO, TEXAS.

CITY OF EL PASO
CAPITAL IMPROVEMENT DEPARTMENT

SHEET TITLE
DOOR DETAILS

SHEET
A413

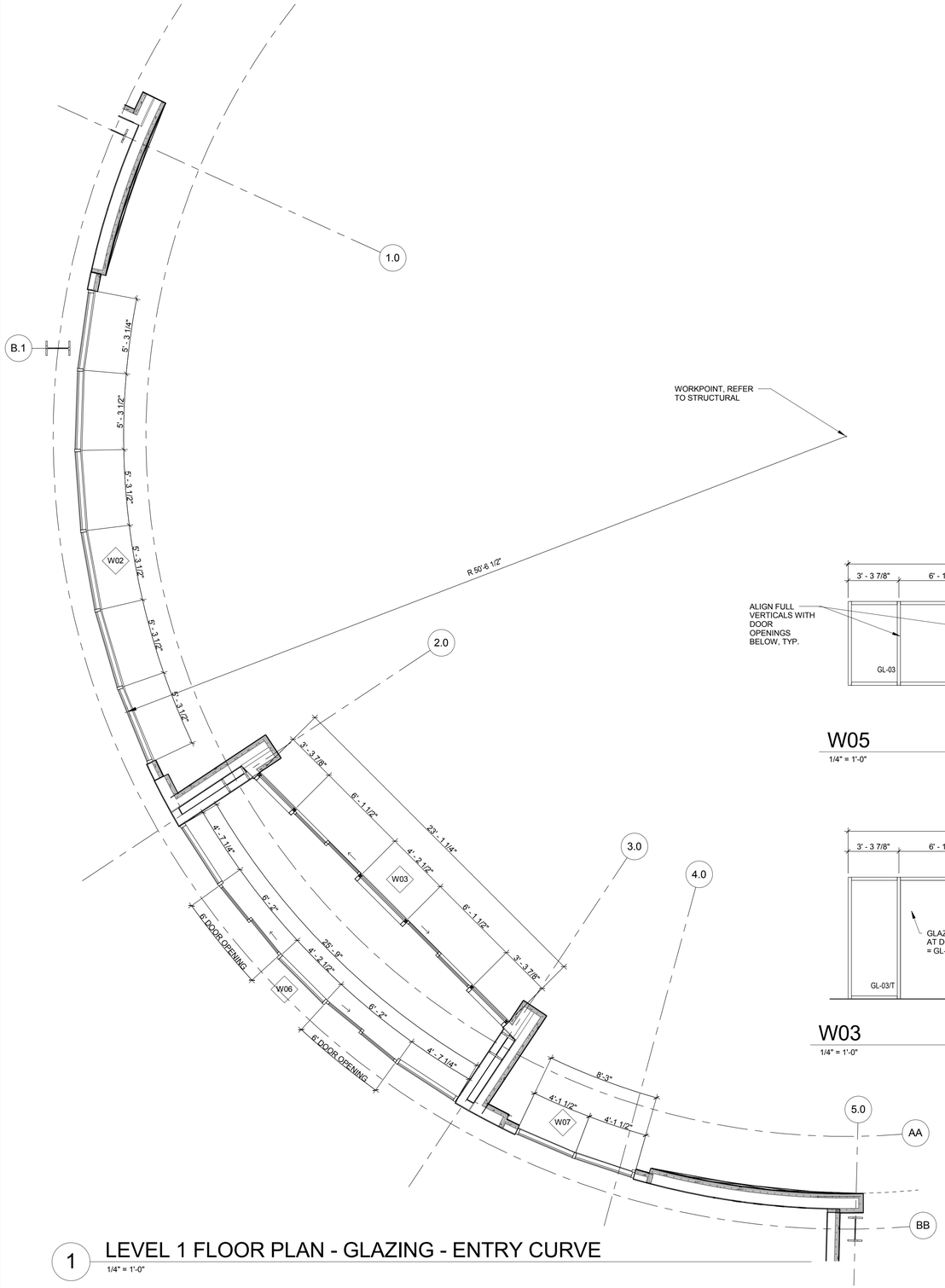

1 LEVEL 1 FLOOR PLAN - GLAZING - ENTRY CURVE
1/4" = 1'-0"

GLAZING SCHEDULE		
GL-01	CLEAR	VIRACON (OR APPROVED EQUAL) VUE1-50
GL-01/T	CLEAR	VIRACON (OR APPROVED EQUAL) VUE1-50, TEMPERED
GL-02	BLUE TINT	VIRACON (OR APPROVED EQUAL) VE26-2M
GL-03	GREY TINT	VIRACON (OR APPROVED EQUAL) VE3-2M
GL-03/T	GREY TINT	VIRACON (OR APPROVED EQUAL) VE3-2M, TEMPERED
GL-04/T	CLEAR	1/4" CLEAR GLAZING, TEMPERED
GL-05	CLEAR	SAFETY GLAZING

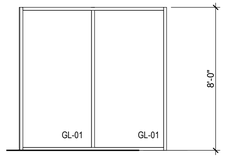

RE: WINDOW SCHEDULE PLAN FOR PANEL DIMENSIONS

W07 - SEGMENTED
1/4" = 1'-0"

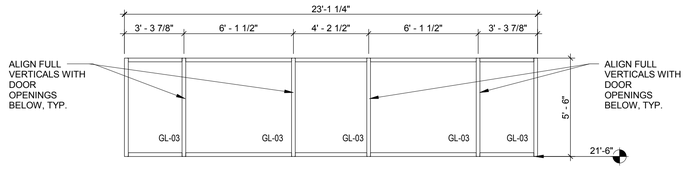

W05
1/4" = 1'-0"

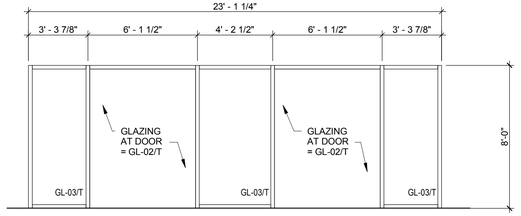

W03
1/4" = 1'-0"

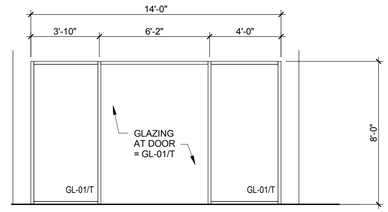

W08
1/4" = 1'-0"

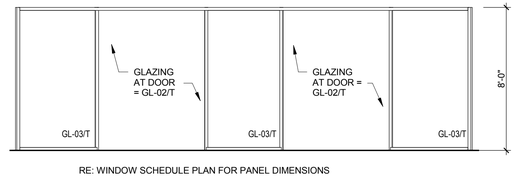

RE: WINDOW SCHEDULE PLAN FOR PANEL DIMENSIONS

W06 - SEGMENTED
1/4" = 1'-0"

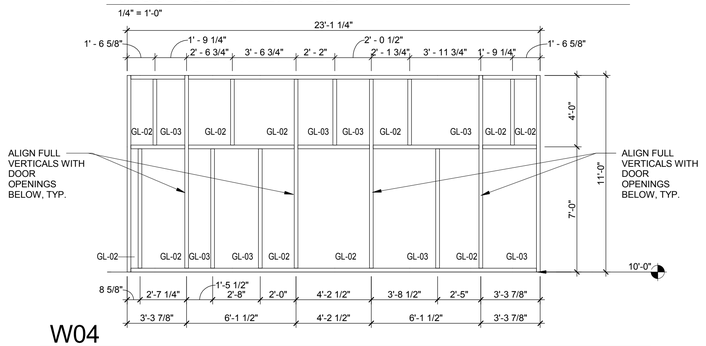

W04
1/4" = 1'-0"

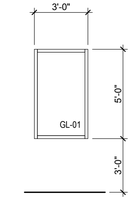

W01
1/4" = 1'-0"

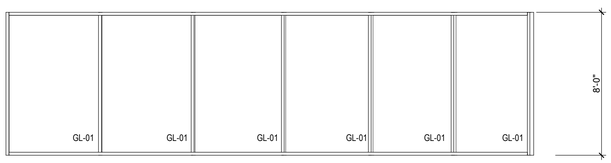

RE: WINDOW SCHEDULE PLAN FOR PANEL DIMENSIONS

W02 - SEGMENTED
1/4" = 1'-0"

100% CONSTRUCTION DOCUMENTS

RNL
1050 17th STREET
SUITE A200
DENVER, CO 80265
303 295 1717 t
303 292 0845 f

REFERENCES – BENCHMARKS

	DATE	REVISIONS	BY

ARCHITECTS SEAL

REGISTERED ARCHITECT KIRK M. ENSIGN 12937 STATE OF TEXAS
02/05/2016
100% CONSTRUCTION DOCUMENTS

SCALE
HOR: SHOWN
VER: SHOWN

DATE: 05/4/16
DESIGN BY: Designer
DRAWN BY: Author
CHKD BY: Checker
APPD BY: Approver

PROJECT NAME
NORTHGATE TRANSFER CENTER
EL PASO, TEXAS.

CITY OF EL PASO
CAPITAL IMPROVEMENT DEPARTMENT

SHEET TITLE
WINDOW SCHEDULE

SHEET
A414

GLAZING SCHEDULE		
GL-01	CLEAR	VIRACON (OR APPROVED EQUAL) VUE1-50
GL-01/T	CLEAR	VIRACON (OR APPROVED EQUAL) VUE1-50, TEMPERED
GL-02	BLUE TINT	VIRACON (OR APPROVED EQUAL) VE26-2M
GL-03	GREY TINT	VIRACON (OR APPROVED EQUAL) VE3-2M
GL-03/T	GREY TINT	VIRACON (OR APPROVED EQUAL) VE3-2M, TEMPERED
GL-04/T	CLEAR	1/4" CLEAR GLAZING, TEMPERED
GL-05	CLEAR	SAFETY GLAZING

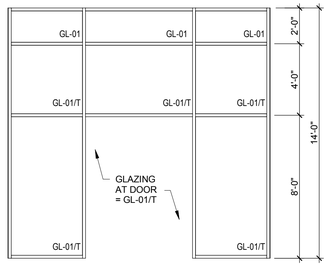

W14
1/4" = 1'-0"

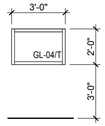

W15
1/4" = 1'-0"

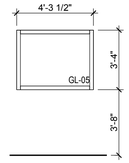

W16
1/4" = 1'-0"

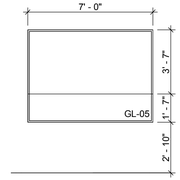

W17
1/4" = 1'-0"

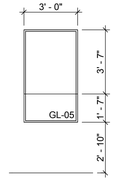

W18
1/4" = 1'-0"

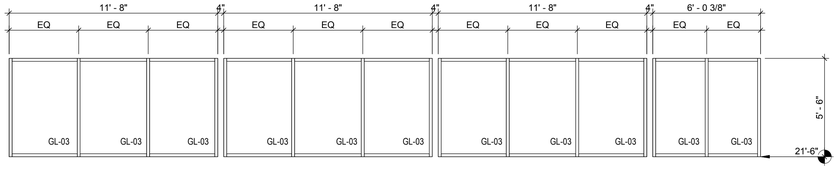

W13
1/4" = 1'-0"

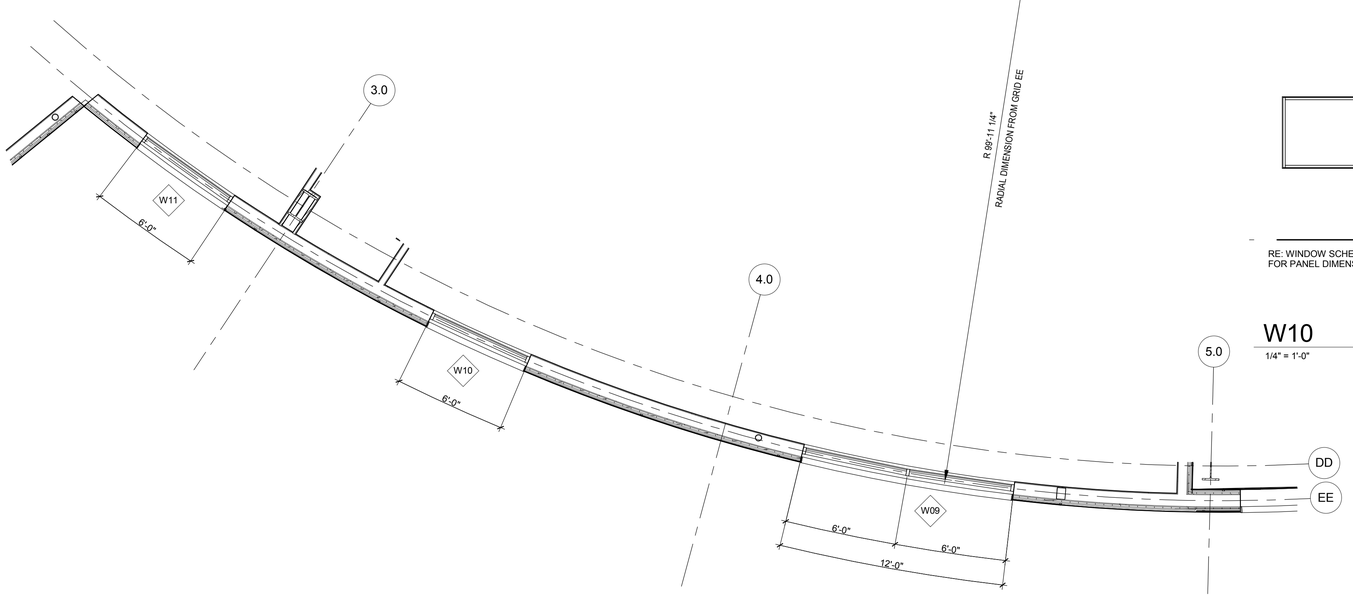

1 LEVEL 1 FLOOR PLAN - GLAZING - SOUTH CURVE
1/4" = 1'-0"

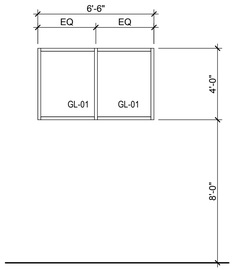

RE: WINDOW SCHEDULE PLAN FOR PANEL DIMENSIONS

W10
1/4" = 1'-0"

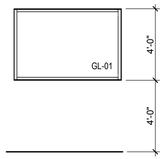

RE: WINDOW SCHEDULE PLAN FOR PANEL DIMENSIONS

W11
1/4" = 1'-0"

W12
1/4" = 1'-0"

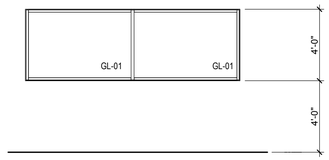

RE: WINDOW SCHEDULE PLAN FOR PANEL DIMENSIONS

W09 - SEGMENTED
1/4" = 1'-0"

100% CONSTRUCTION DOCUMENTS

RNL
1050 17th STREET
SUITE A200
DENVER, CO 80265
303 295 1717 t
303 292 0845 f

REFERENCES – BENCHMARKS

REVISIONS	DATE	BY

ARCHITECT'S SEAL

REGISTERED ARCHITECT KIRKPATRICK MICHAEL STATE OF TEXAS 12931

02/05/2016

100% CONSTRUCTION DOCUMENTS

SCALE
HOR: SHOWN
VER: SHOWN

DATE 05/04/16
DESIGN BY Designer
DRAWN BY Author
CHKD BY Checker
APPD BY Approver

PROJECT NAME

NORTHGATE TRANSFER CENTER

EL PASO, TEXAS.

CITY OF EL PASO

CAPITAL IMPROVEMENT DEPARTMENT

SHEET TITLE

WINDOW SCHEDULE

SHEET
A415

FLOOR MATERIALS

NAME	FINISH	DESCRIPTION	MANUFACTURER	PRODUCT	SIZE	NOTES
CPT-1		FIELD CARPET	SHAW	STYLE: LUMINOSITY TILE 59362, COLOR: STARDUST 60585		GRIP STRIP BACKING, QUARTER TURNED INSTALLATION
CT-1		CERAMIC TILE FLOORING	KAISER TILE	COLLECTION: STORIES, COLOR: SWEET SIXTEEN JELLY BEAN, MATTE	12X24, 24X24	GROUT COLOR: MAIPAI CHARCOAL #47
ST-1		CHEMICAL STAIN ON CONCRETE	BOMANITE	STAIN COLOR 1: CREAM		
ST-2		CHEMICAL STAIN ON CONCRETE	BOMANITE	STAIN COLOR 2: DESERT TAN		
ST-3		CHEMICAL STAIN ON CONCRETE	BOMANITE	STAIN COLOR 3: AUBURN		
VCT-1		VINYL COMPOSITION TILE	MANNINGTON	129 PUTTY	12X12	

CEILING MATERIALS

NAME	FINISH	DESCRIPTION	MANUFACTURER	PRODUCT	SIZE	NOTES
ACP-1		ACOUSTICAL CEILING TILE -SUSPENDED	ARMSTRONG	COLOR: SANDSCAPES	AS SHOWN	
ACT-1		ACOUSTICAL CEILING TILE	ARMSTRONG	OPTIMA 1", WHITE	2X2	15/16" TEGULAR GRID
ACT-2		ACOUSTICAL CEILING TILE	ARMSTRONG	CERAMAGUARD, WHITE	2X4	15/16" TEGULAR GRID
GB-1		GYPSUM BOARD				
PM-1		PERFORATED METAL CEILING				
PM-2		PERFORATED METAL DECK				

SPECIALTY EQUIPMENT SCHEDULE

TYPE	DESCRIPTION	Count
01	MOBILE RACK SHELF	1
02	ICE MACHINE	1
03	FOOD PREP TABLE	1
04	HOT DOG DISPLAY STEAMER	1
05	SOFT DRINK DISPENSER	1
06	WORK TABLE	1
07	WORK TABLE WITH DRAWER	3
08	3 COMPARTMENT SINK	1
09	KITCHEN HOOD	1
10	RANGE WITH 24 INCH RAISED GRIDDLE	1
11	GAS FRYER	1
12	REFRIGERATOR UNIT	1
13	FREEZER UNIT	1
14	HAND WASH SINK	1
15	DOUBLE SINK - STAINLESS STEEL	1

GENERAL FINISHES

FINISH CATEGORY	TYPE	MANUFACTURER	PRODUCT	DESCRIPTION	FINISH	COLOR	SIZE	NOTES
BASE								
BASE	B-1	ROPPE		4" CURVED RUBBER BASE		114 LUNAR DUST	1/8" THICK	
BASE	B-2			ALUMINUM COVED BASE TRIM	ANNODIZED MATTE		1/8" THICK	
PAINT								
PAINT	P-1	DUNN EDWARDS		FIELD PAINT	EGGSHELL	DE6225 FOSSIL		
PAINT	P-2	DUNN EDWARDS		ACCENT PAINT	EGGSHELL	DE5767 STAR CITY		
PAINT	P-3	DUNN EDWARDS		ACCENT PAINT	LOW SHEEN	DEC786 MINER'S DUST		
PAINT	P-4	DUNN EDWARDS		ACCENT PAINT	EGGSHELL	DE5271 GINGER SPICE		
PAINT	P-5	DUNN EDWARDS		ACCENT PAINT	EGGSHELL	DEC757 RINCON COVE		
PAINT	P-6	DUNN EDWARDS		ACCENT PAINT	EGGSHELL	BLACK		
PLASTIC LAMINATE								
PLASTIC LAMINATE	PL-1	FORMICA		FORMICA LAMINATE	MICRODOT PATTERN	POSSUM 5343-MC		INTERIOR FINISH: BLACK MELAMINE
SOLID SURFACE								
SOLID SURFACE	SS-1	AVONITE		SOLID SURFACE	GLOSS	PEARL K3-8343	1/2" THICK	
TILE TRIM ACCESSORIES								
TILE TRIM ACCESSORIES	TA-1		22 MM STRAIGHT EDGE WAINSCOT TRIM	TILE TRIM	SATIN ALUMINUM, STAINLESS STEEL			
WALL FINISH								
WALL FINISH	FRP-1	MARLITE	-	FIBER REINFORCED PLASTIC	LATEX EGGSHELL	P100 WHITE		-
WALL PANEL/PROTECTION								
WALL PANEL/PROTECTION	CG-1	BLANKE	STAINLESS STEEL CORNER PROTECTION PROFILE	CORNER GUARDS - LOCATIONS NOTED ON PLAN		BRUSHED STAINLESS STEEL		48" HIGH, 3" WIDE
WALL TILE								
WALL TILE	WT-1	KAISER TILE	STORIES	WALL TILE	POLISHED	SWEET SIXTEEN ROCK CANDY, GROUT COLOR: MAIPAI PEARL GRAY #19	12X24, 24X24, SEE ELEVATIONS FOR PATTERN	AS SHOWN
WINDOW SHADES								
WINDOW SHADES	SH-1	MECHOSHADE SYSTEMS	EURO-TWILL REVERSIBLE BROKEN WEAVE 6450 SERIES	WINDOW ROLLER SHADES		6462 LIGHT CHARCOAL		
WINDOW SHADES	SH-2	MECHOSHADE SYSTEMS	EQUINOX BLACKOUT 0100 SERIES	WINDOW ROLLER SHADES		0105 SILVER		

100% CONSTRUCTION DOCUMENTS

RNL
1050 17th STREET
SUITE A200
DENVER, CO 80265
303 295 1717 t
303 292 0845 f

REFERENCES – BENCHMARKS

DATE	REVISIONS	BY

ARCHITECT'S SEAL

02/05/2016

100% CONSTRUCTION DOCUMENTS

SCALE
HOR: SHOWN
VER: SHOWN

DATE 5/24/16
DESIGN BY Designer
DRAWN BY Author
CHKD BY Checker
APPD BY Approver

PROJECT NAME

NORTHGATE TRANSFER CENTER

EL PASO, TEXAS.

CITY OF EL PASO
CAPITAL IMPROVEMENT DEPARTMENT

SHEET TITLE

FINISH SCHEDULE AND LEGEND

SHEET
A416

SHEET NOTES	
05.04	EXPANDED METAL PANEL CANOPY
05.05	ALUMINUM METAL SCREEN. MANUFACTURER'S PAINTED FINISH
05.06A	7/16" ALUM. PLATE SURROUND AT WINDOW PERIMETER. COLOR TO MATCH STOREFRONT MULLIONS
07.01	SOLID PHENOLIC EXTERIOR WALL PANEL: RAINSCREEN SYSTEM
07.02	FIBER CEMENT EXTERIOR WALL PANEL: RAINSCREEEN SYSTEM
07.03	FIBER CEMENT EXTERIOR SOFFIT PANEL: RAINSCREEN SYSTEM
07.04	FIBER CEMENT EXTERIOR FASCIA PANEL: RAINSCREEN SYSTEM
07.05	FIBER CEMENT EXTERIOR PANEL MECHANICAL SCREEN
07.06	FIBER CEMENT PANEL SOFFIT WITH WHITE TPO MEMBRANE ROOFING FULLY ADHERED OVER ½" PROTECTION BOARD ON RIGID INSULATION
07.42	METAL PARAPET COPING
07.62E	PARAPET SCUPPER
08.43	ALUMINUM STOREFRONT SYSTEM, INSIDE-GLAZED
08.44	ALUMINUM GLAZED CURTAIN WALL
26.05	EXTERIOR LIGHTS, RE: ELEC.

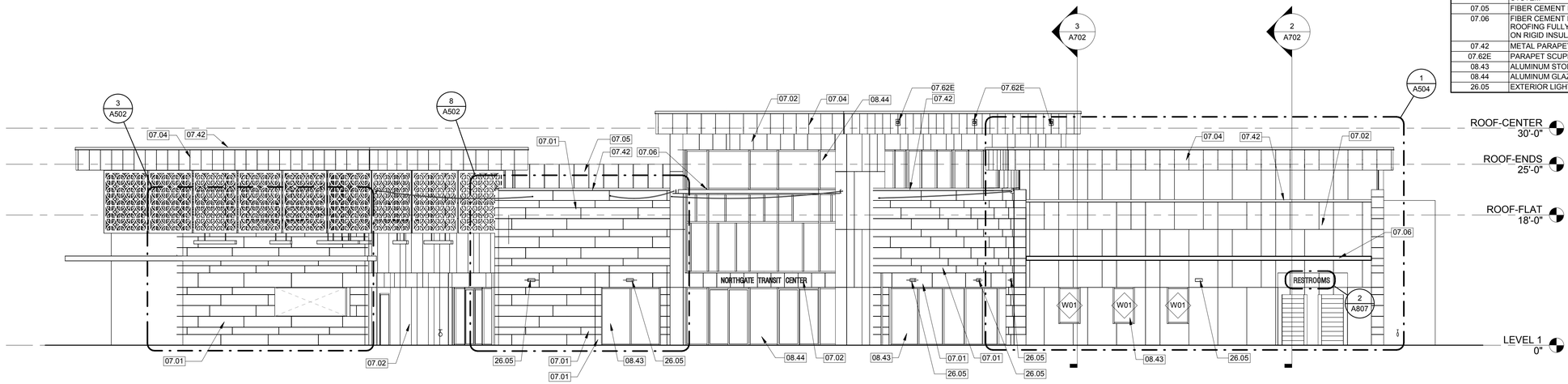

2 NORTH ELEVATION

1/8" = 1'-0"

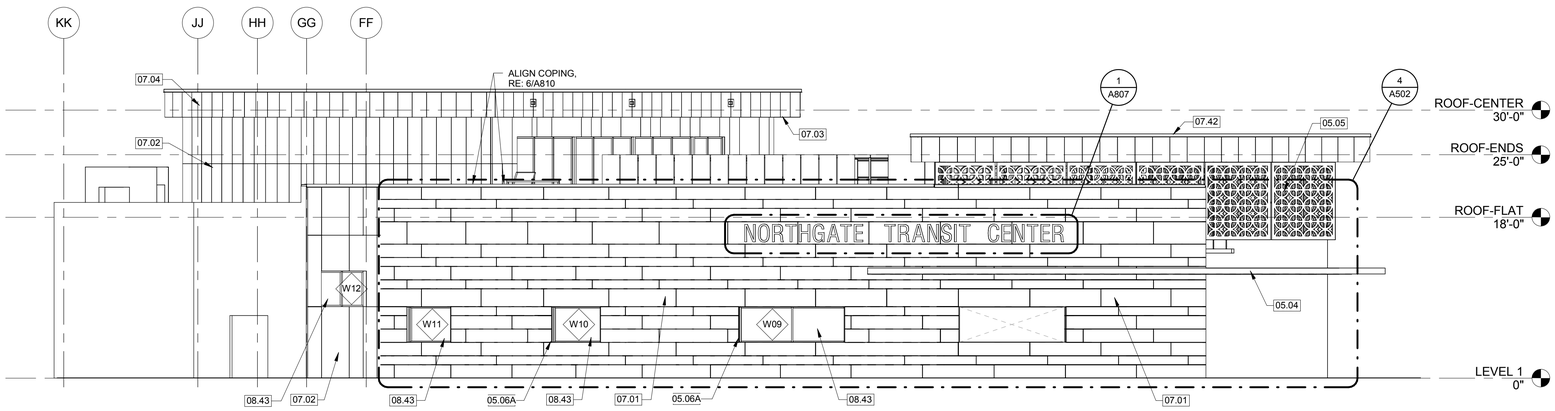

1 SOUTH ELEVATION

1/8" = 1'-0"

100% CONSTRUCTION DOCUMENTS

RNL
1050 17th STREET
SUITE A200
DENVER, CO 80265
303 295 1717 t
303 292 0845 f

REFERENCES – BENCHMARKS

DATE	REVISIONS	BY

ARCHITECT'S SEAL

REGISTERED ARCHITECT MICHAEL ANTHONY ARNOLD 12937 STATE OF TEXAS

02/05/2016

100% CONSTRUCTION DOCUMENTS

SCALE
HOR: SHOWN
VER: SHOWN

DATE 05/04/16
DESIGN BY Designer
DRAWN BY Author
CHKD BY Checker
APPD BY Approver

PROJECT NAME

NORTHGATE TRANSFER CENTER

EL PASO, TEXAS.

CITY OF EL PASO

CAPITAL IMPROVEMENT DEPARTMENT

SHEET TITLE

TRANSFER CENTER ELEVATIONS

SHEET

A500

SHEET NOTES	
05.04	EXPANDED METAL PANEL CANOPY
05.05	ALUMINUM METAL SCREEN. MANUFACTURER'S PAINTED FINISH
07.01	SOLID PHENOLIC EXTERIOR WALL PANEL: RAINSCREEN SYSTEM
07.02	FIBER CEMENT EXTERIOR WALL PANEL: RAINSCREEEN SYSTEM
07.03	FIBER CEMENT EXTERIOR SOFFIT PANEL: RAINSCREEN SYSTEM
07.04	FIBER CEMENT EXTERIOR FASCIA PANEL: RAINSCREEN SYSTEM
07.06	FIBER CEMENT PANEL SOFFIT WITH WHITE TPO MEMBRANE ROOFING FULLY ADHERED OVER ½" PROTECTION BOARD ON RIGID INSULATION
07.42	METAL PARAPET COPING
08.43	ALUMINUM STOREFRONT SYSTEM, INSIDE-GLAZED
08.44	ALUMINUM GLAZED CURTAIN WALL
26.05	EXTERIOR LIGHTS, RE: ELEC.

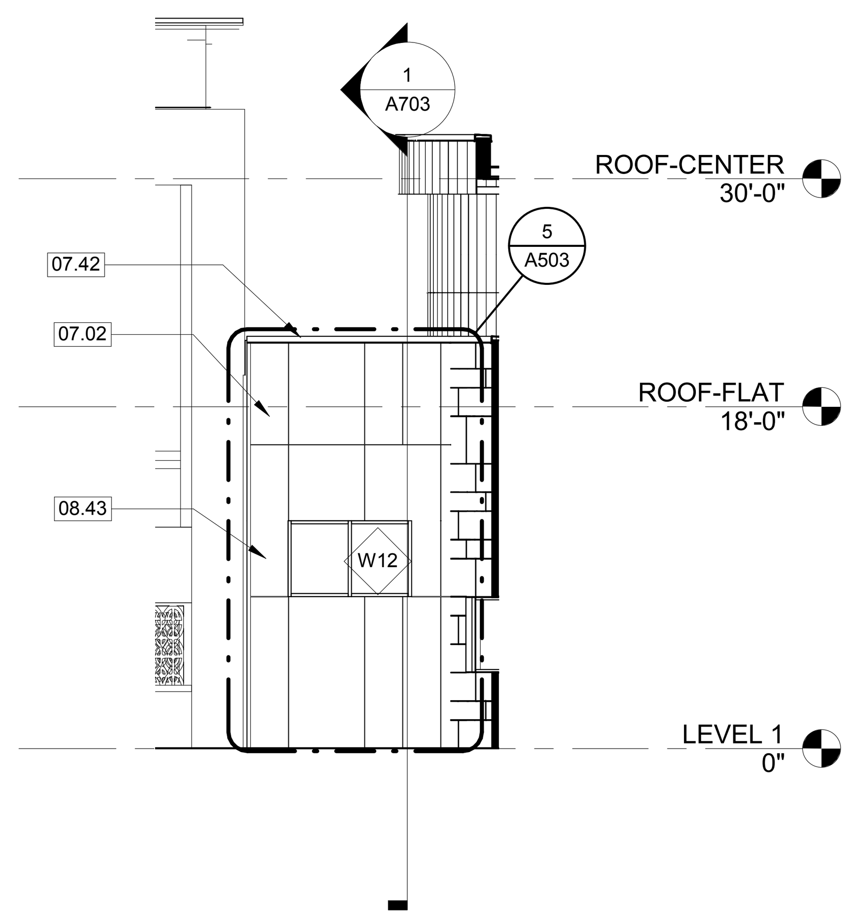

2 SOUTH ELEVATION - VESTIBULE
1/8" = 1'-0"

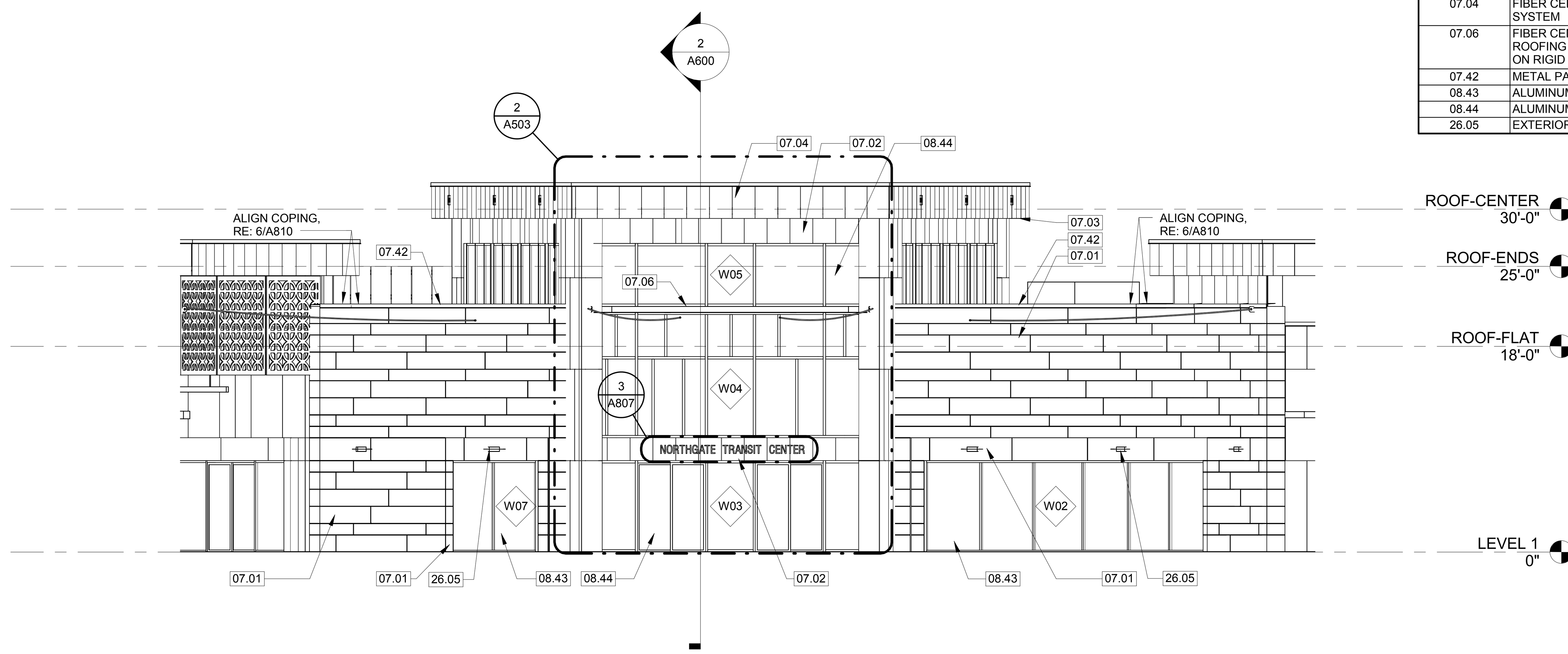

3 NORTHEAST ELEVATION - ENTRANCE
1/8" = 1'-0"

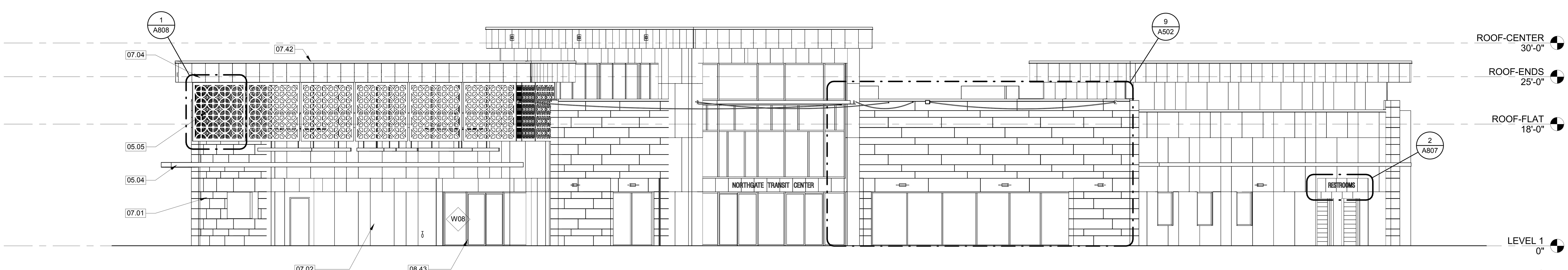

1 EAST ELEVATION
1/8" = 1'-0"

RNL
1050 17th STREET
SUITE A200
DENVER, CO 80265
303 295 1717 t
303 292 0845 f

100% CONSTRUCTION DOCUMENTS

REFERENCES – BENCHMARKS

REVISIONS | DATE | BY

ARCHITECTS SEAL

02/05/2016

SCALE
HOR: SHOWN
VER: SHOWN

DATE: 02/05/16
DESIGN BY: Designer
DRAWN BY: Author
CHKD. BY: Checker
APP'D. BY: Approver

PROJECT NAME

NORTHGATE TRANSFER CENTER

EL PASO, TEXAS.

CITY OF EL PASO

CAPITAL IMPROVEMENT DEPARTMENT

SHEET TITLE

TRANSFER CENTER ELEVATIONS

SHEET

A501

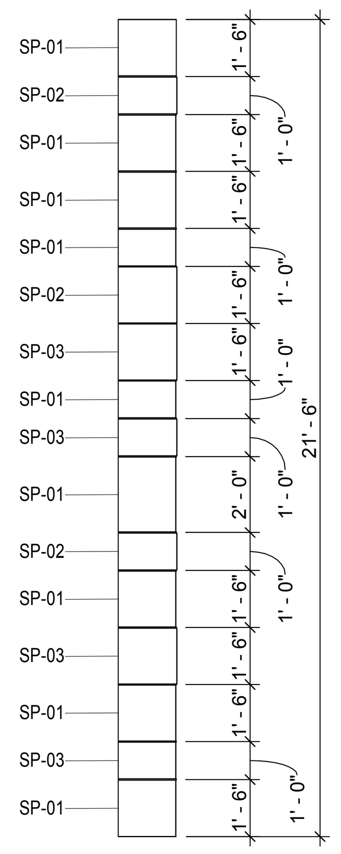

6 INT CORNER PATIO
1/4" = 1'-0"

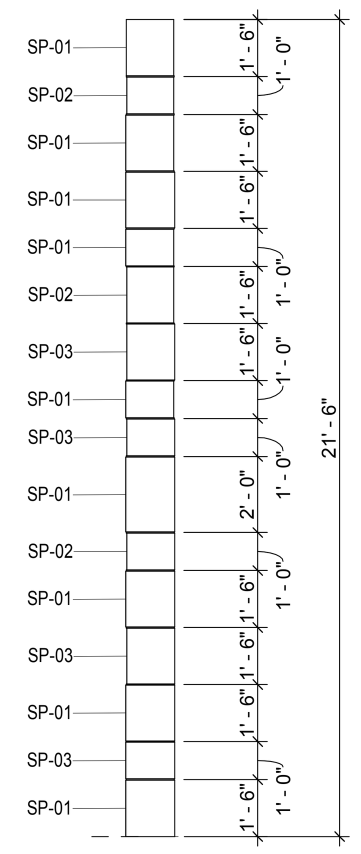

7 PLAZA CURVE EAST END
1/4" = 1'-0"

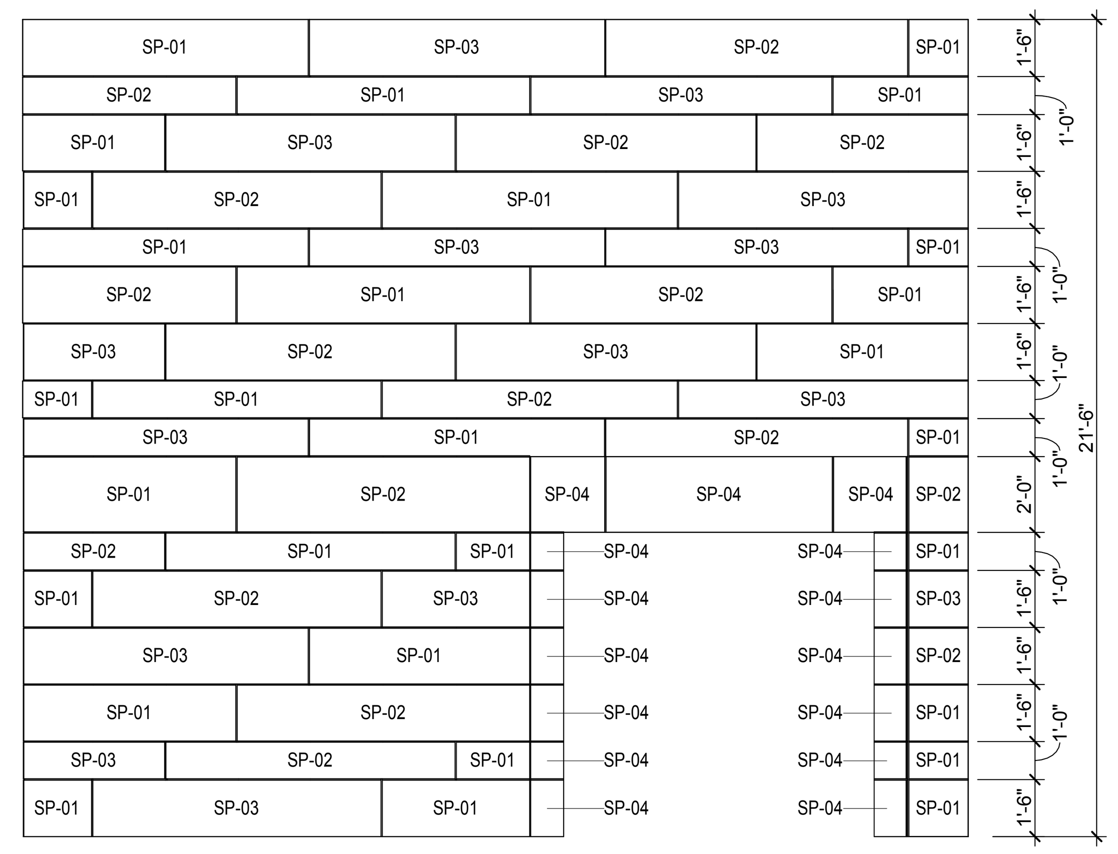

8 ENLARGED ELEVATION - PLAZA 1
1/4" = 1'-0"

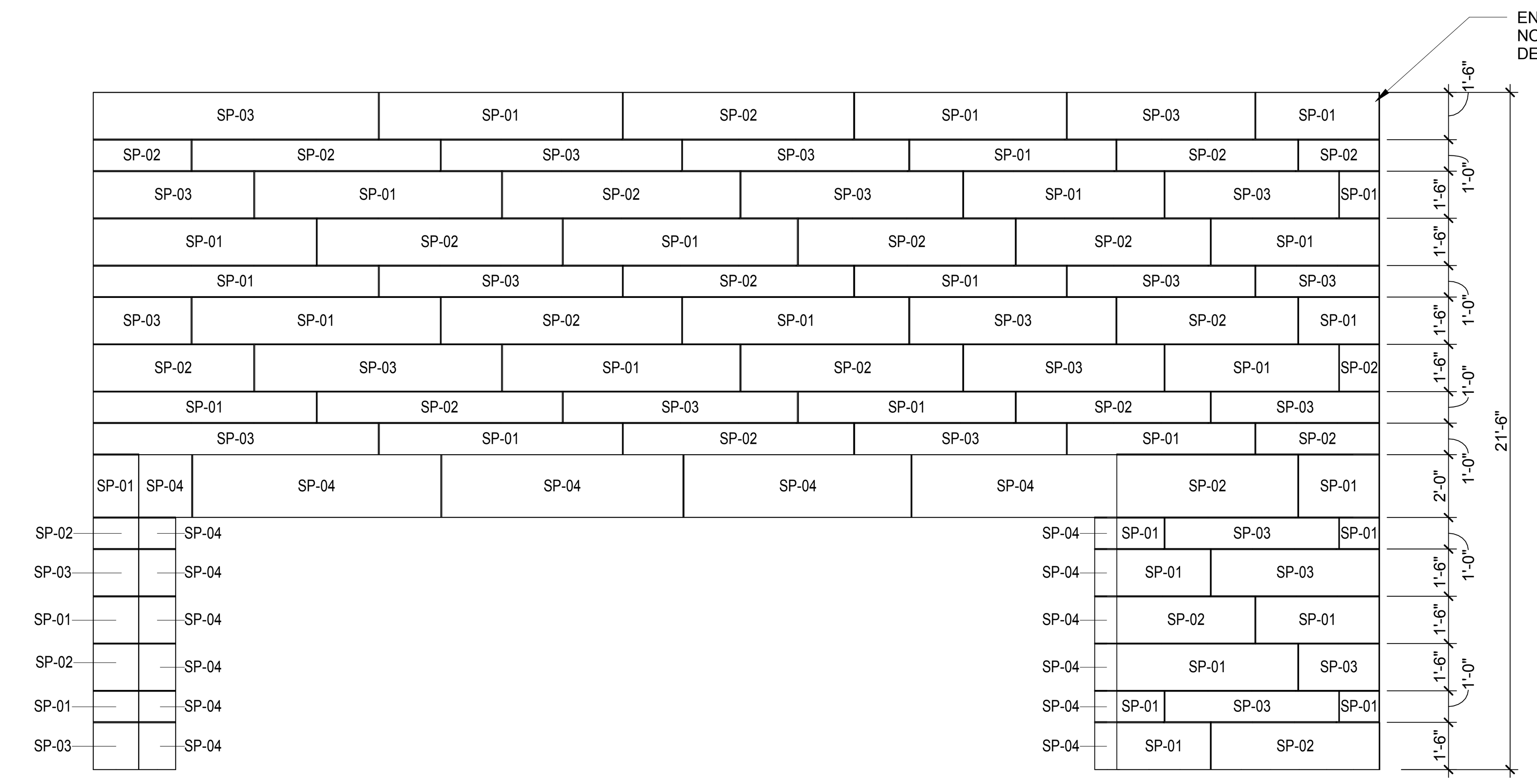

9 ENLARGED ELEVATION - PLAZA 2
1/4" = 1'-0"

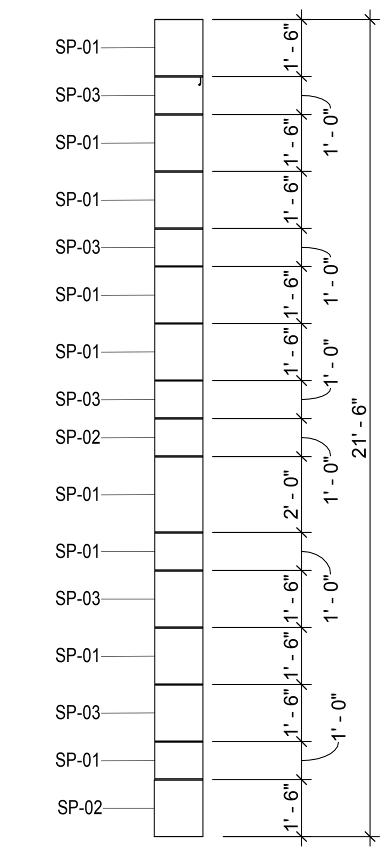

10 INT CORNER OP DAY ROOM
1/4" = 1'-0"

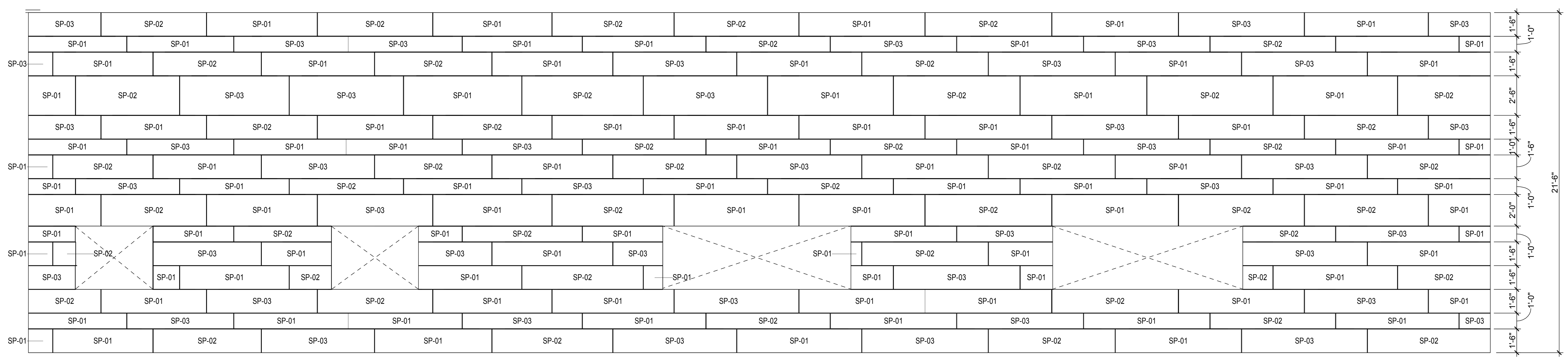

4 ENLARGED ELEVATION - SOUTH CURVE
1/4" = 1'-0"

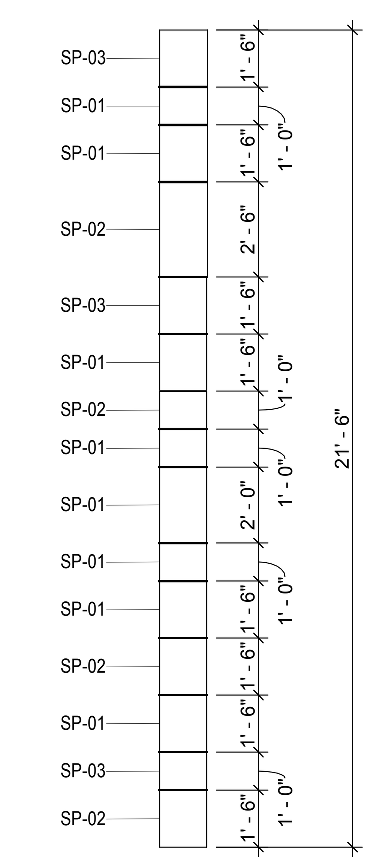

5 SOUTH CURVE END
1/4" = 1'-0"

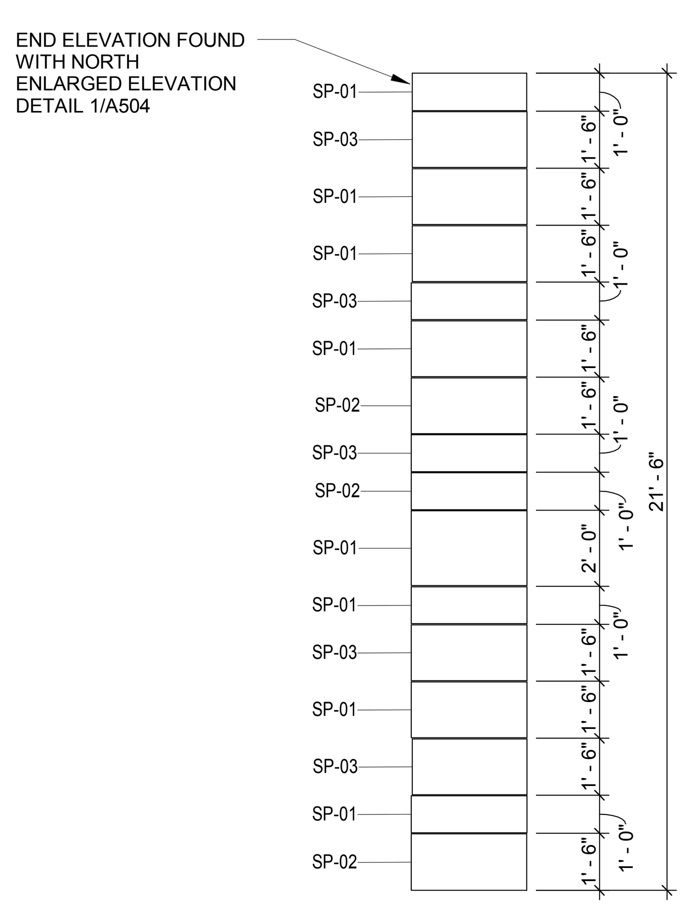

1 ENLARGED ELEV. - EXT CORNER RESTROOM
1/4" = 1'-0"

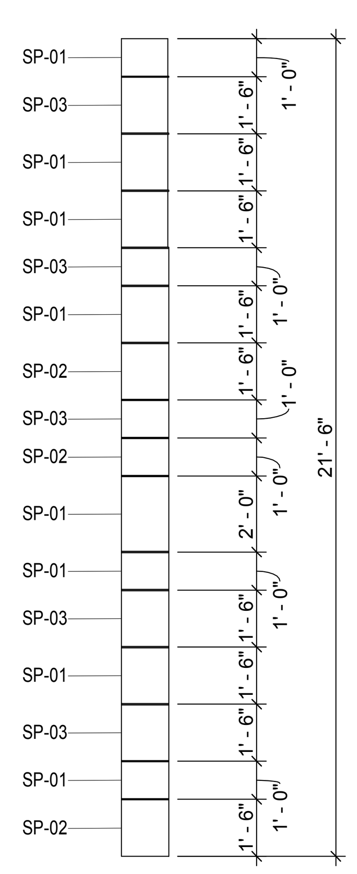

2 ENLARGED ELEV. - INT CORNER RESTROOM
1/4" = 1'-0"

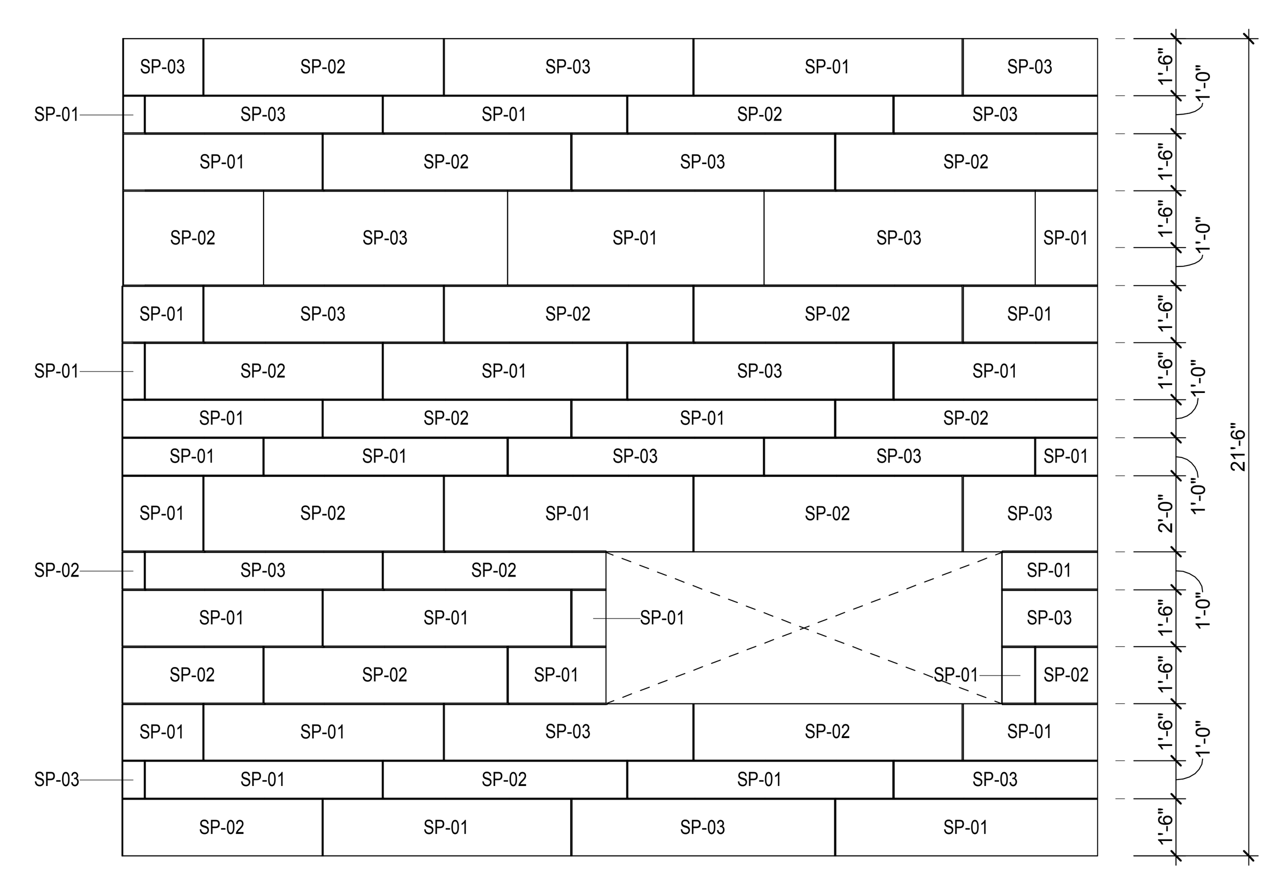

3 ENLARGED ELEVATION - PATIO CURVE
1/4" = 1'-0"

EXTERIOR PANEL - LEGEND

SP-01	SOLID PHENOLIC NW15/ST MILANO SABBIA	HORIZONTAL SOLID PHENOLIC PANELS TO BE MAXIMIZED TO FULL 8FT PANEL LENGTH WHERE POSSIBLE, TYP. OF ALL SOLID PHENOLIC PANEL ELEVATIONS
SP-02	SOLID PHENOLIC NW03/ST HARMONY OAK	
SP-03	SOLID PHENOLIC NW14/MT FRENCH WALNUT	
SP-04	SOLID PHENOLIC A0.3.1.0 PASTEL GREY	
FC-01	FIBER CEMENT IRON GRAY	
FC-02	FIBER CEMENT PEWTER	

RNL
1050 17th STREET
SUITE A200
DENVER, CO 80265
303 295 1717 t
303 292 0845 f

100% CONSTRUCTION DOCUMENTS

REFERENCES - BENCHMARKS

REVISIONS | DATE | BY

ARCHITECTS SEAL

02/05/2016

SCALE
HOR: SHOWN
VER: SHOWN

DATE: 02/05/16
DESIGN BY: Designer
DRAWN BY: Author
CHKD. BY: Checker
APPD. BY: Approver

PROJECT NAME
NORTHGATE TRANSFER CENTER
EL PASO, TEXAS.

CITY OF EL PASO
CAPITAL IMPROVEMENT DEPARTMENT

SHEET TITLE
TRANSFER CENTER ENLARGED ELEVATIONS

SHEET
A502

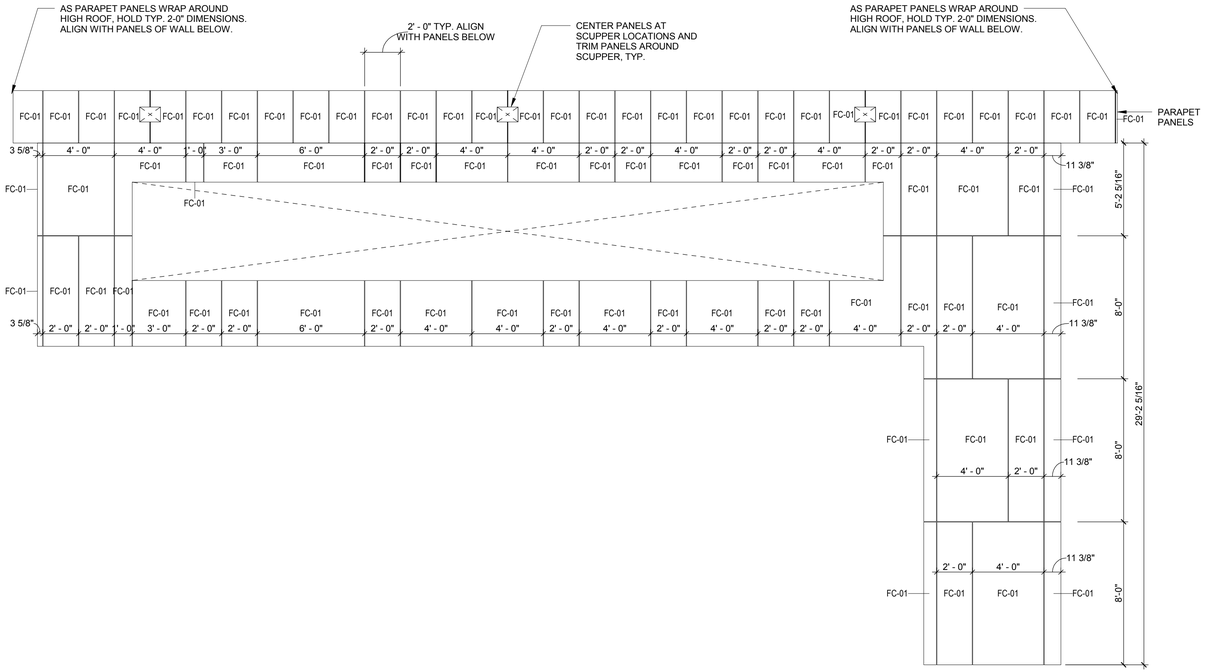

3 ENLARGED ELEVATION - SOUTH CLERESTORY

1/4" = 1'-0"

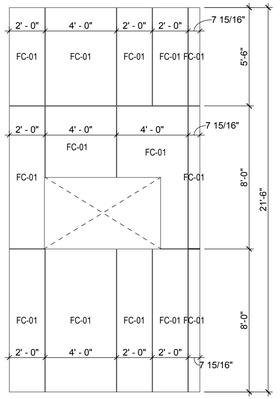

5 ENLARGED ELEVATION - BACK VESTIBULE

1/4" = 1'-0"

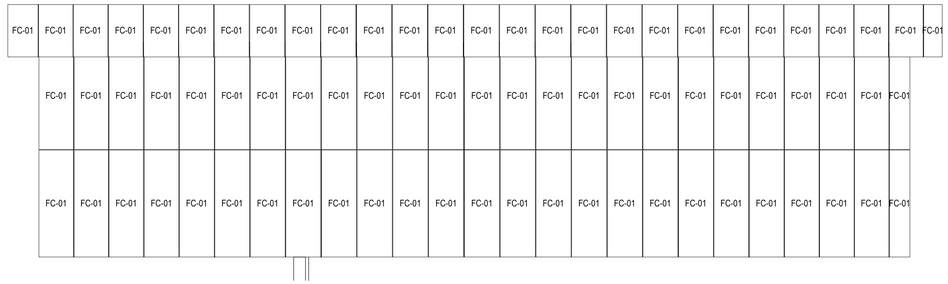

ENLARGED ELEVATION - ENTRY HIGH ROOF (BACK FACADE)

4

1/4" = 1'-0"

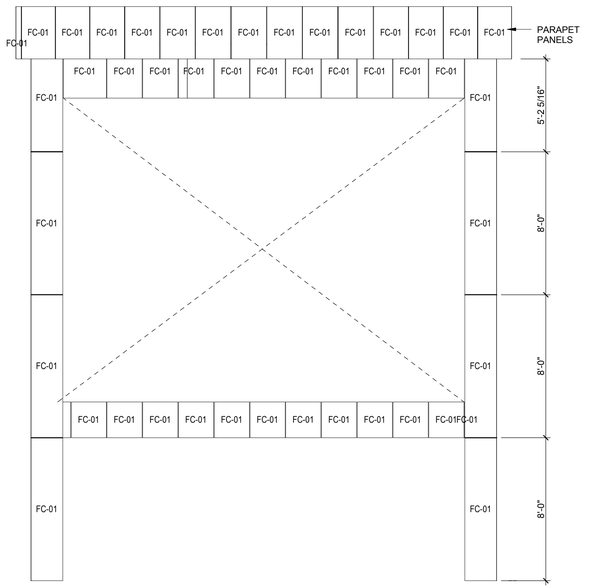

EXTERIOR PANEL - LEGEND		
SP-01	SOLID PHENOLIC NW15/ST MILANO SABBIA	HORIZONTAL SOLID PHENOLIC PANELS TO BE MAXIMIZED TO FULL 8FT PANEL LENGTH WHERE POSSIBLE, TYP. OF ALL SOLID PHENOLIC PANEL ELEVATIONS
SP-02	SOLID PHENOLIC NW03/ST HARMONY OAK	
SP-03	SOLID PHENOLIC NW14/MT FRENCH WALNUT	
SP-04	SOLID PHENOLIC A0.3.1.0 PASTEL GREY	
FC-01	FIBER CEMENT IRON GRAY	
FC-02	FIBER CEMENT PEWTER	

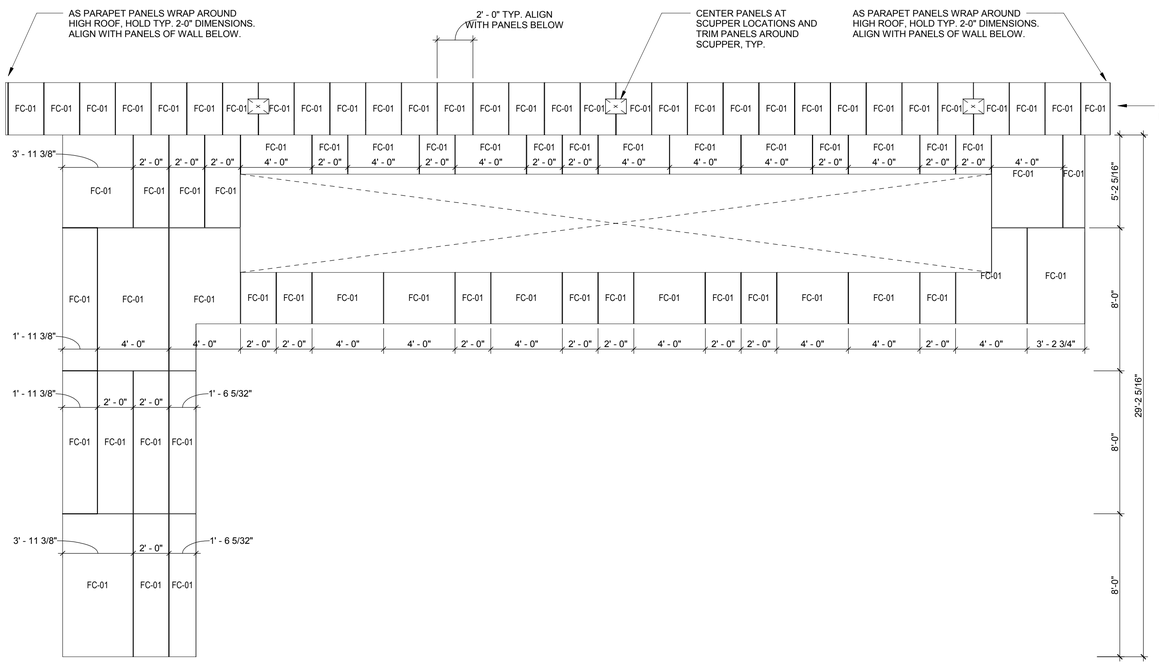

1 ENLARGED ELEVATION - NORTH CLERESTORY

1/4" = 1'-0"

2 ENLARGED ELEVATION - ENTRANCE

1/4" = 1'-0"

100% CONSTRUCTION DOCUMENTS

RNL
1050 17th STREET
SUITE A200
DENVER, CO 80265
303 295 1717 t
303 292 0845 f

REFERENCES – BENCHMARKS

DATE	REVISIONS	BY

ARCHITECT'S SEAL

REGISTERED ARCHITECT — KIRK M. GRIFFIS — 12937 — STATE OF TEXAS

02/05/2016

100% CONSTRUCTION DOCUMENTS

SCALE
HOR: SHOWN
VER: SHOWN

DATE 05/4/16
DESIGN BY Designer
DRAWN BY Author
CHKD BY Checker
APPD BY Approver

PROJECT NAME

NORTHGATE TRANSFER CENTER

EL PASO, TEXAS.

CITY OF EL PASO

CAPITAL IMPROVEMENT DEPARTMENT

SHEET TITLE

TRANSFER CENTER ENLARGED ELEVATIONS

SHEET

A503

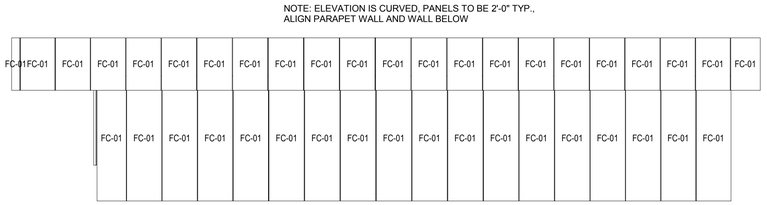

8 ENLARGED ELEVATION - NORTH BACK
1/4" = 1'-0"

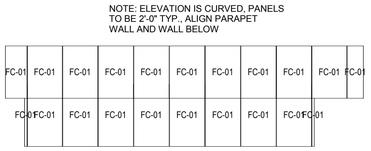

6 PLAZA AT NORTH ROOF
1/4" = 1'-0"

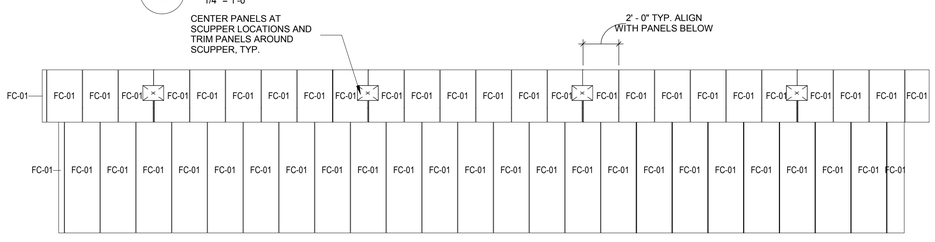

3 ENLARGED ELEVATION - NORTH HIGH ROOF
1/4" = 1'-0"

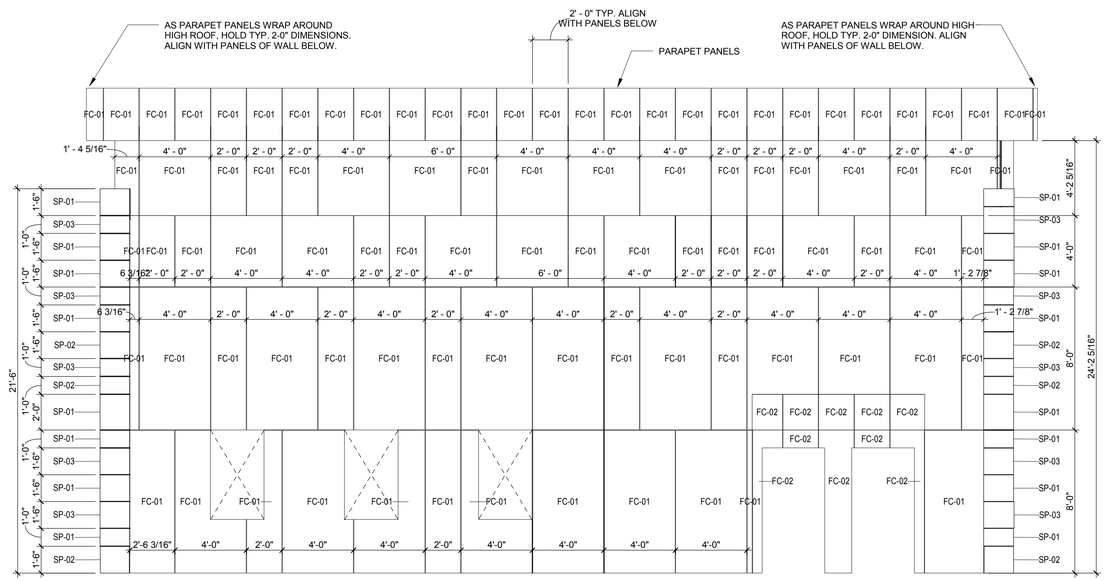

1 ENLARGED ELEVATION - NORTH
1/4" = 1'-0"

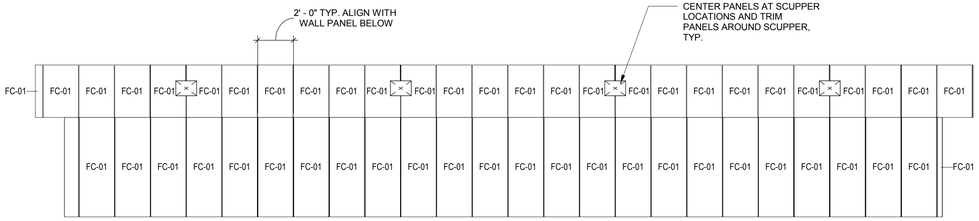

9 ENLARGED ELEVATION - PATIO HIGH ROOF
1/4" = 1'-0"

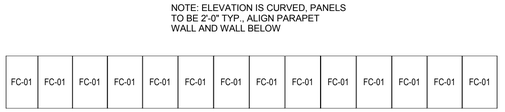

7 ENLARGED ELEVATION - PATIO PLAZA (NORTH)
1/4" = 1'-0"

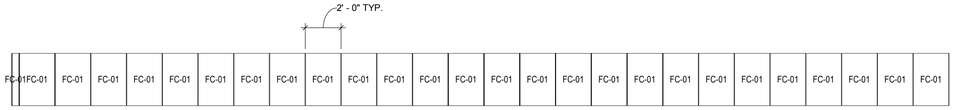

5 ENLARGED ELEVATION - PATIO EAST
1/4" = 1'-0"

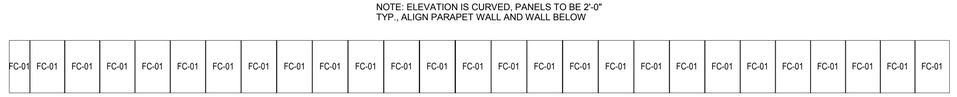

4 ENLARGED ELEVATION - PATIO SOUTH
1/4" = 1'-0"

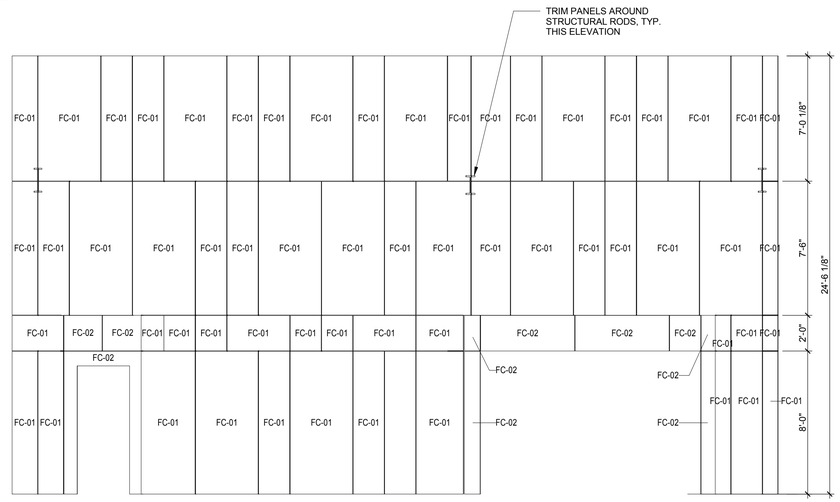

2 ENLARGED ELEVATION - PATIO
1/4" = 1'-0"

RNL
1050 17th STREET
SUITE A200
DENVER, CO 80265
303 295 1717 t
303 292 0845 f

100% CONSTRUCTION DOCUMENTS

REFERENCES – BENCHMARKS

BY	REVISIONS	DATE

ARCHITECT'S SEAL

REGISTERED ARCHITECT — KIRK M. KELLY — 12937 — STATE OF TEXAS

02/05/2016

100% CONSTRUCTION DOCUMENTS

SCALE
HOR: SHOWN
VER: SHOWN

DATE: 5/04/16
DESIGN BY: Designer
DRAWN BY: Author
CHKD BY: Checker
APPD BY: Approver

PROJECT NAME

NORTHGATE TRANSFER CENTER

EL PASO, TEXAS.

CITY OF EL PASO
CAPITAL IMPROVEMENT DEPARTMENT

THE CITY OF EL PASO TEXAS

SHEET TITLE

TRANSFER CENTER ENLARGED ELEVATIONS

SHEET

A504

DEDUCTIVE ALTERNATE 01	
1	CLOCK TOWER, CLOCK, LIGHTS, AND DETAILS RELATED TO THESE ITEMS PART OF DEDUCTIVE ALTERNATE 01

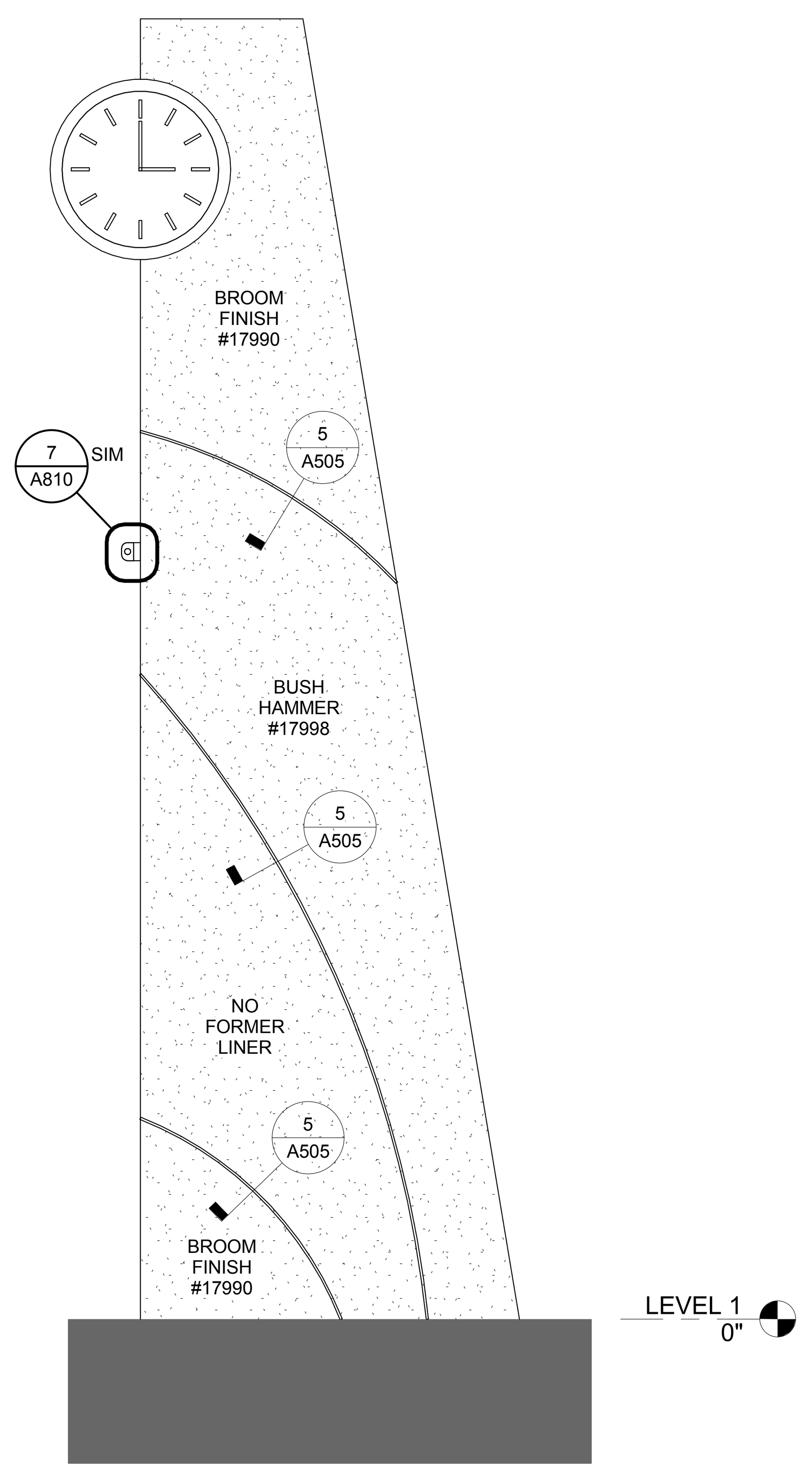

NOTE:
REFER TO CLOCK TOWER NW ELEVATION FOR OPPOSITEHAND DIMENSIONS

1 CLOCK TOWER SE ELEVATION
1/4" = 1'-0"

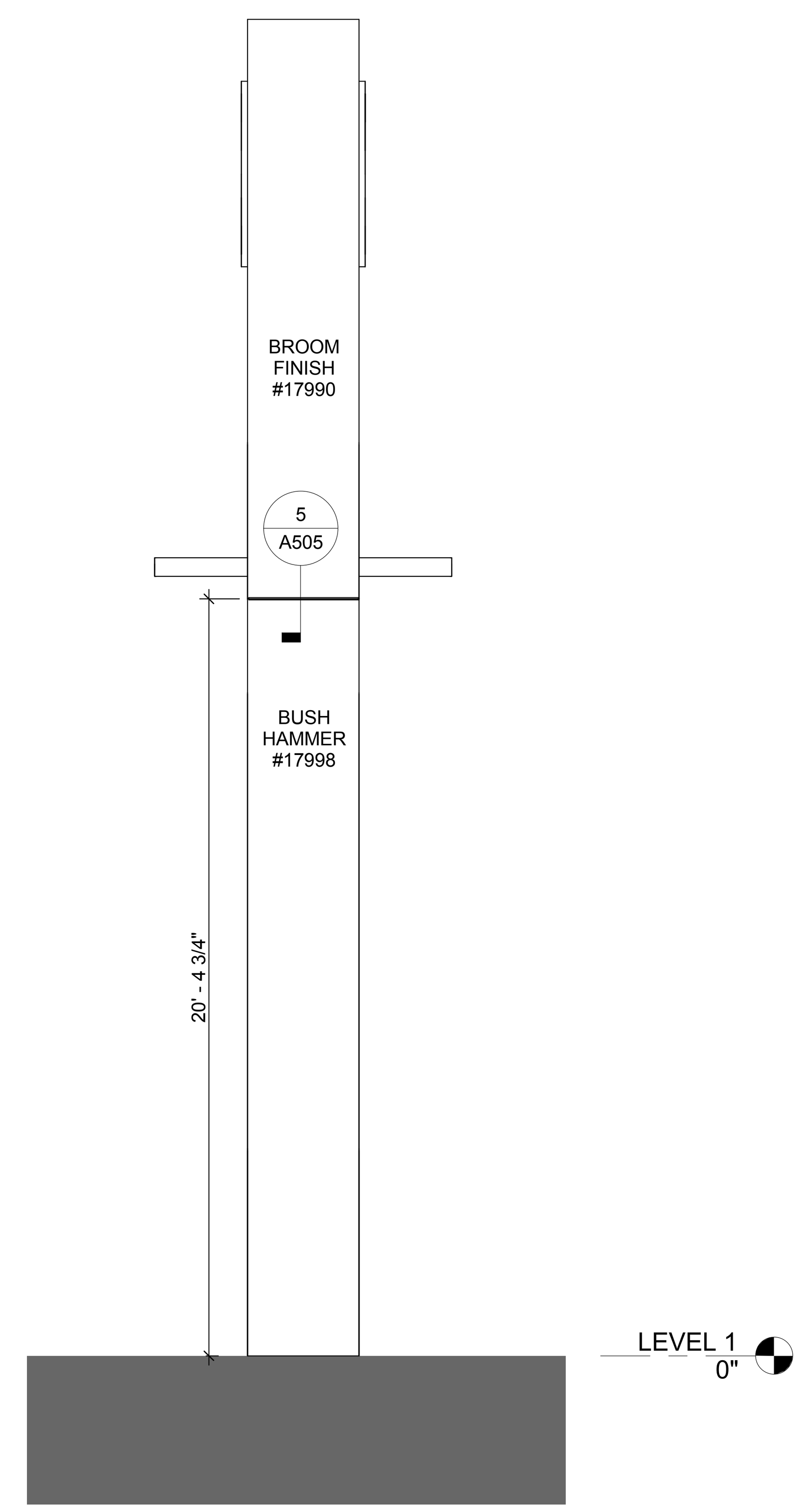

2 CLOCK TOWER NE ELEVATION
1/4" = 1'-0"

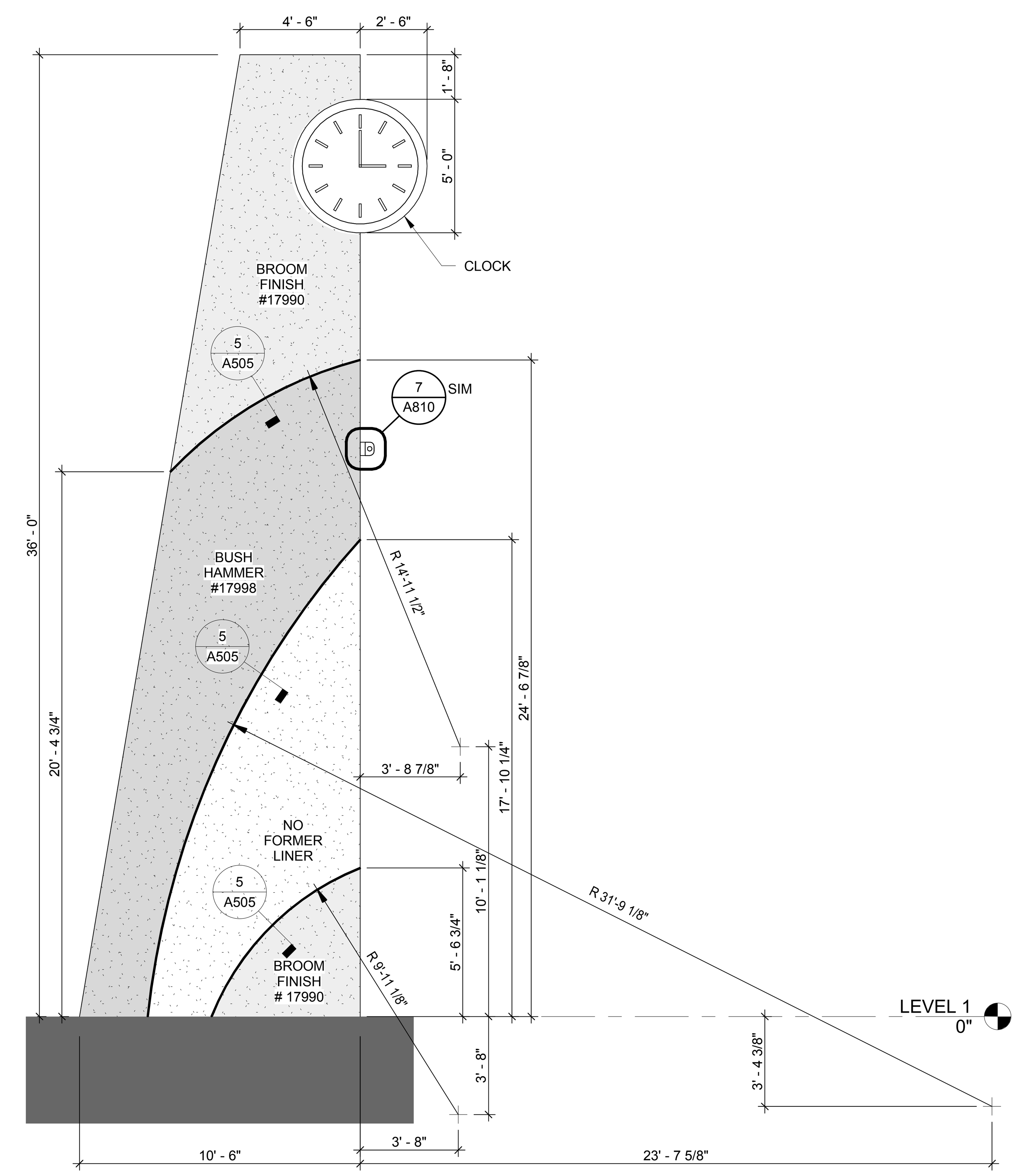

3 CLOCK TOWER NW ELEVATION
1/4" = 1'-0"

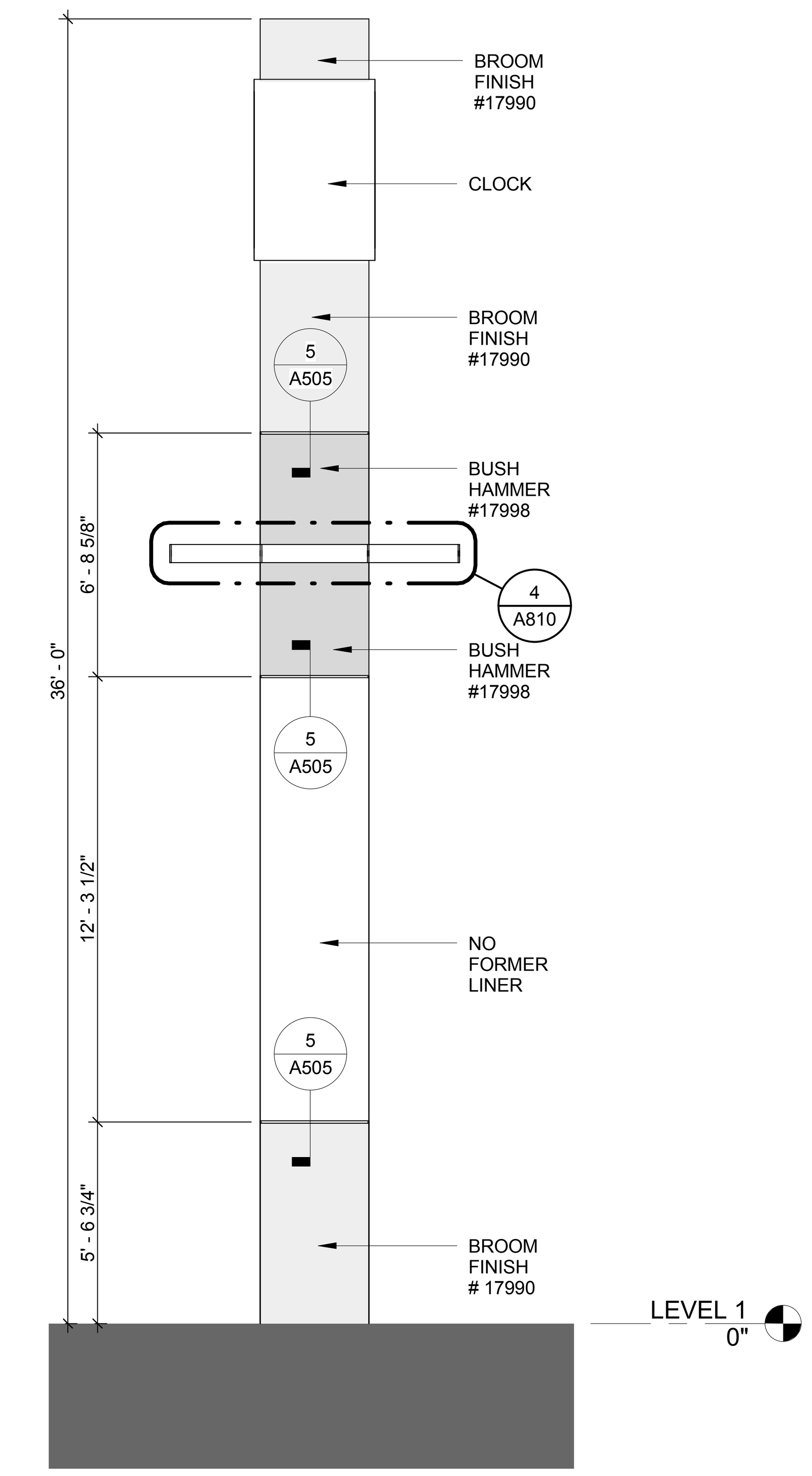

4 CLOCK TOWER SW ELEVATION
1/4" = 1'-0"

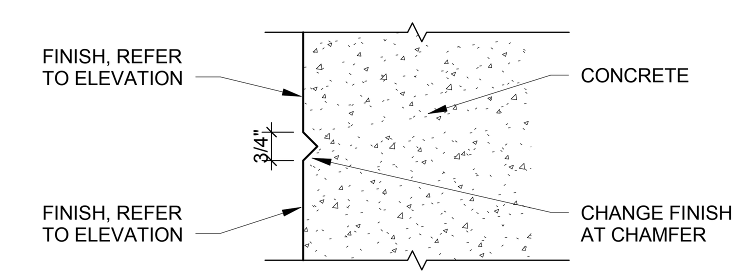

5 CHAMFER DETAIL
3" = 1'-0"

RNL
1050 17th STREET
SUITE A200
DENVER, CO 80265
303 295 1717 t
303 292 0845 f

100% CONSTRUCTION DOCUMENTS

REFERENCES – BENCHMARKS

DATE	REVISIONS	BY

ARCHITECTS SEAL
02/05/2016
100% CONSTRUCTION DOCUMENTS

SCALE
HOR: SHOWN
VER: SHOWN
DATE: 02/05/16
DESIGN BY: Designer
DRAWN BY: Author
CHKD. BY: Checker
APPD. BY: Approver

PROJECT NAME
NORTHGATE TRANSFER CENTER
EL PASO, TEXAS.

CITY OF EL PASO
CAPITAL IMPROVEMENT DEPARTMENT

SHEET TITLE
TRANSFER CENTER ELEVATIONS - DEDUCTIVE ALTERNATE 01

SHEET
A505

DEDUCTIVE ALTERNATE 01	
1	CLOCK TOWER, CLOCK, LIGHTS, AND DETAILS RELATED TO THESE ITEMS PART OF DEDUCTIVE ALTERNATE 01

4 PERSPECTIVE - LOOKING WEST FROM TRANSIT PLAZA

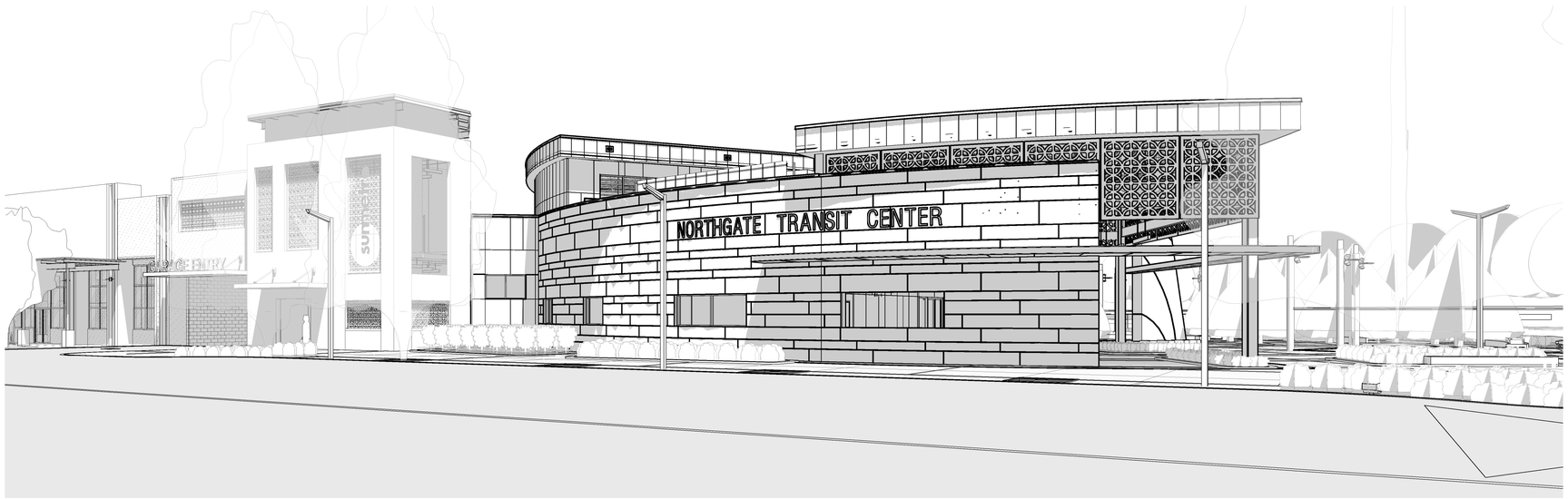

1 PERSPECTIVE - LOOKING NORTH

RNL
1050 17th STREET
SUITE A200
DENVER, CO 80265
303 295 1717 t
303 292 0845 f

100% CONSTRUCTION DOCUMENTS

REFERENCES – BENCHMARKS

	DATE	REVISIONS	BY

ARCHITECT'S SEAL

REGISTERED ARCHITECT · KIMBERLY A. MEEK · 12937 · STATE OF TEXAS

02/05/2016

100% CONSTRUCTION DOCUMENTS

SCALE
HOR: SHOWN
VER: SHOWN

DATE 05/04/16
DESIGN BY Designer
DRAWN BY Author
CHKD BY Checker
APPD BY Approver

PROJECT NAME

NORTHGATE TRANSFER CENTER

EL PASO, TEXAS.

CITY OF EL PASO

CAPITAL IMPROVEMENT DEPARTMENT

THE CITY OF EL PASO TEXAS

SHEET TITLE

TRANSFER CENTER PERSPECTIVES

SHEET

A506

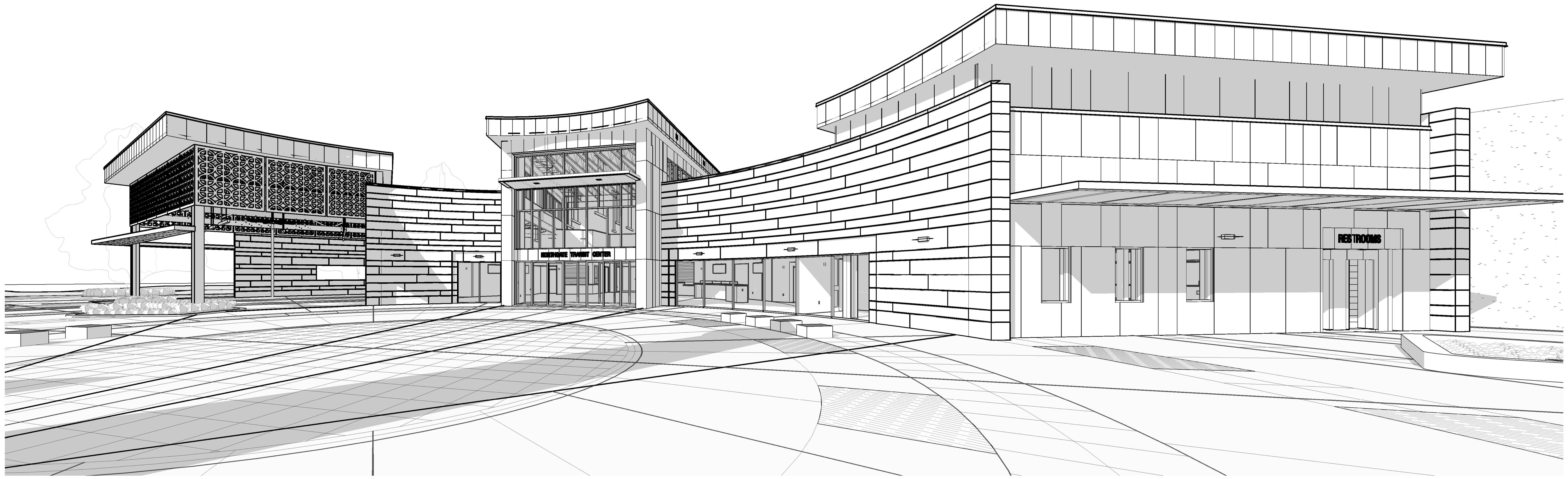

4 PERSPECTIVE - LOOKING SOUTH FROM TRANSIT PLAZA

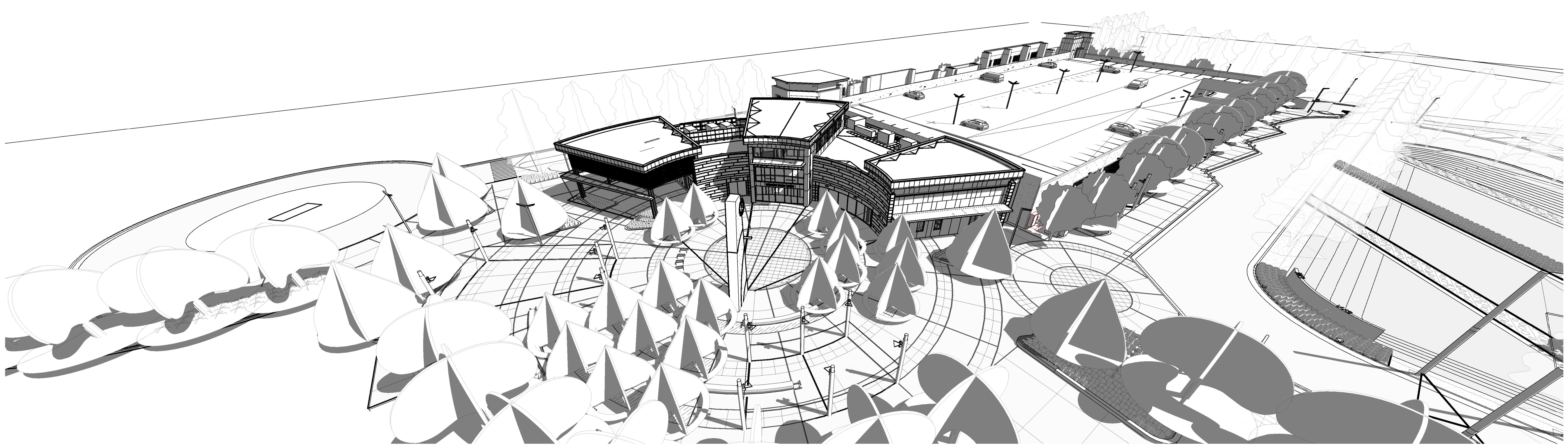

5 PERSPECTIVE - AERIAL VIEW

RNL
1050 17th STREET
SUITE A200
DENVER, CO 80265
303 295 1717 t
303 292 0845 f

100% CONSTRUCTION DOCUMENTS

REFERENCES – BENCHMARKS

ARCHITECTS SEAL
02/05/2016

SCALE
HOR: SHOWN
VER: SHOWN

PROJECT NAME
NORTHGATE TRANSFER CENTER
EL PASO, TEXAS.

CITY OF EL PASO
CAPITAL IMPROVEMENT DEPARTMENT

SHEET TITLE
TRANSFER CENTER PERSPECTIVES

SHEET
A507

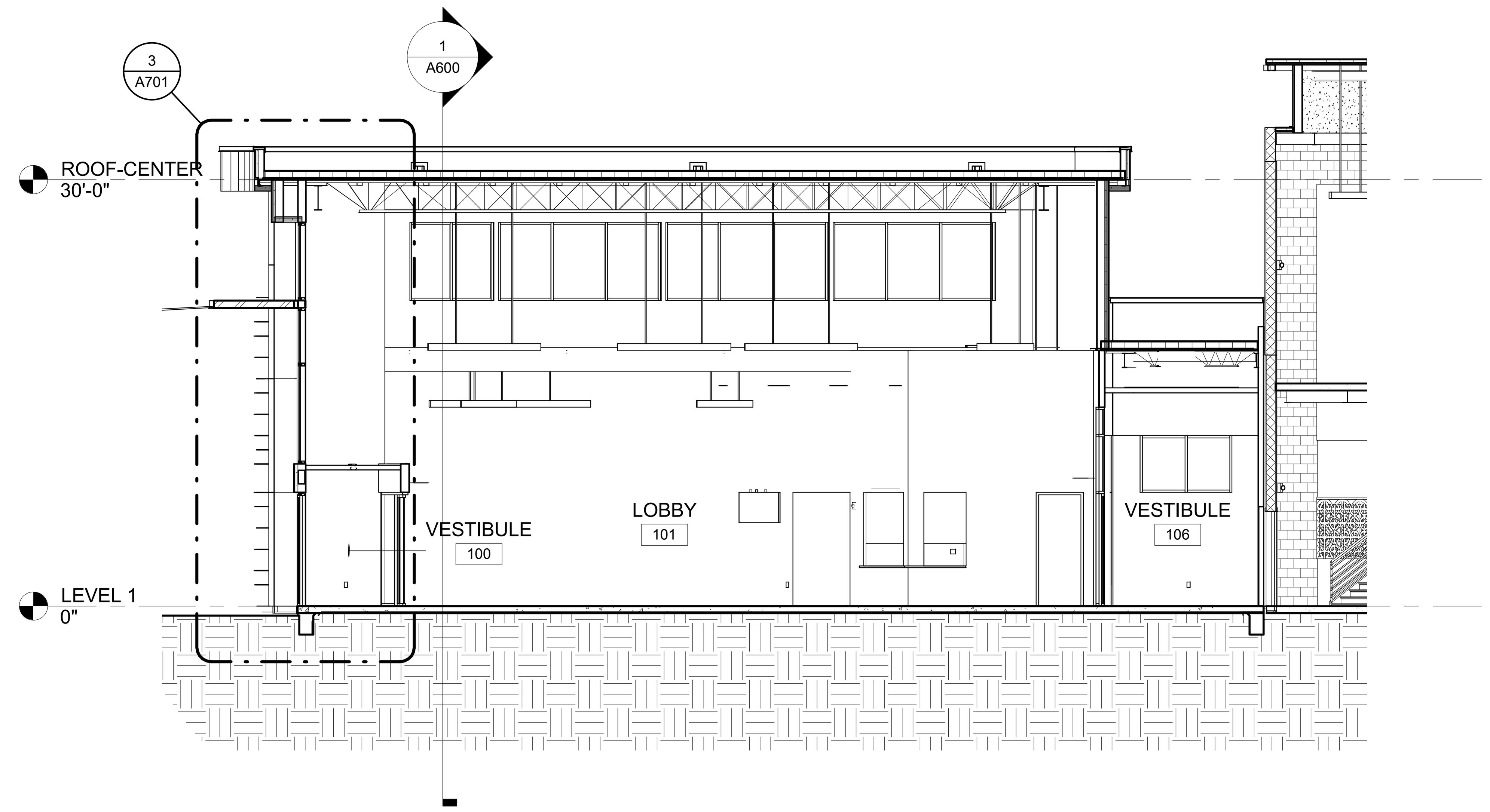

2 BUILDING SECTION 2
1/8" = 1'-0"

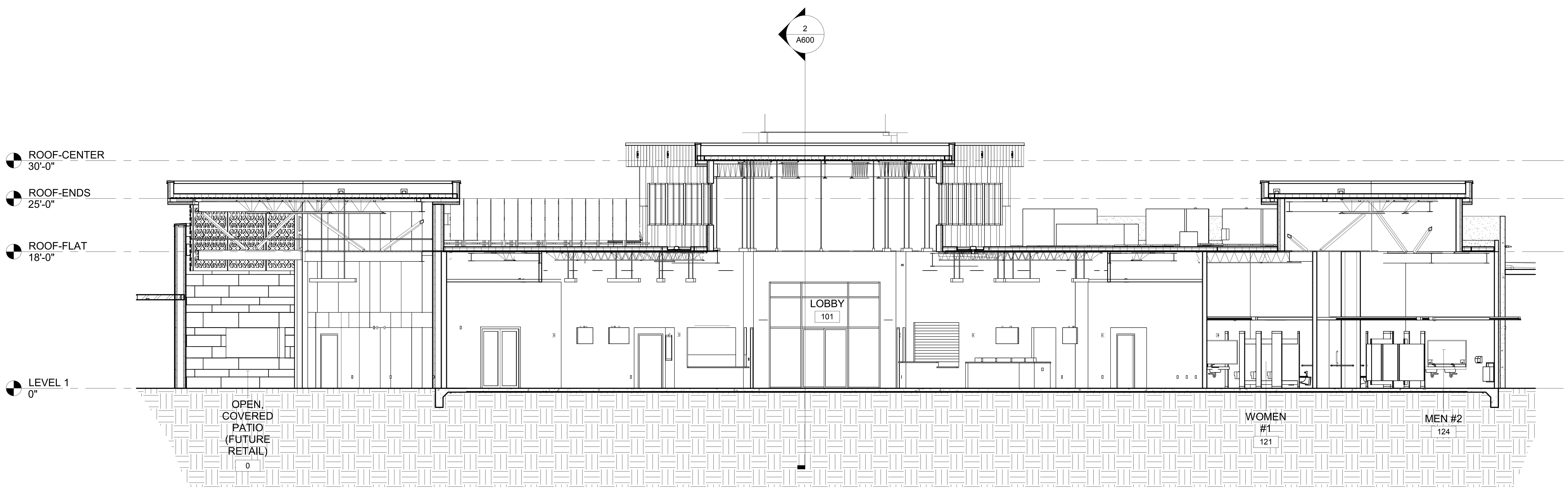

1 BUILDING SECTION 1
1/8" = 1'-0"

RNL
1050 17th STREET
SUITE A200
DENVER, CO 80265
303 295 1717 t
303 292 0845 f

100% CONSTRUCTION DOCUMENTS

REFERENCES – BENCHMARKS

DATE	REVISIONS	BY

ARCHITECTS SEAL
02/05/2016

SCALE
HOR: SHOWN
VER: SHOWN

DATE: 02/05/16
DESIGN BY: Designer
DRAWN BY: Author
CHKD. BY: Checker
APPD. BY: Approver

PROJECT NAME
NORTHGATE TRANSFER CENTER
EL PASO, TEXAS.

CITY OF EL PASO
CAPITAL IMPROVEMENT DEPARTMENT

SHEET TITLE
TRANSFER CENTER SECTIONS

SHEET
A600

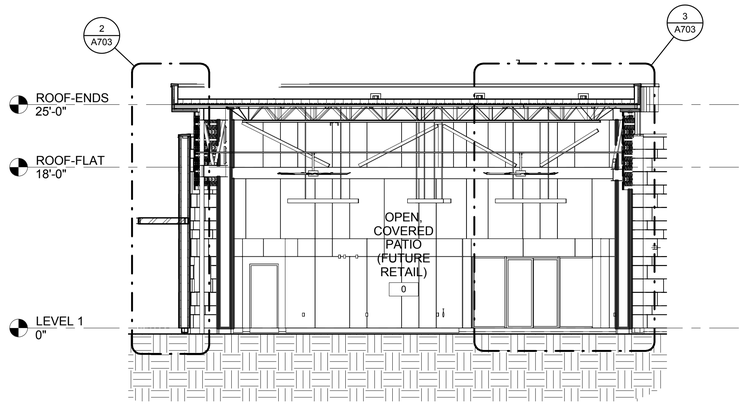

3 BUILDING SECTION 5

1/8" = 1'-0"

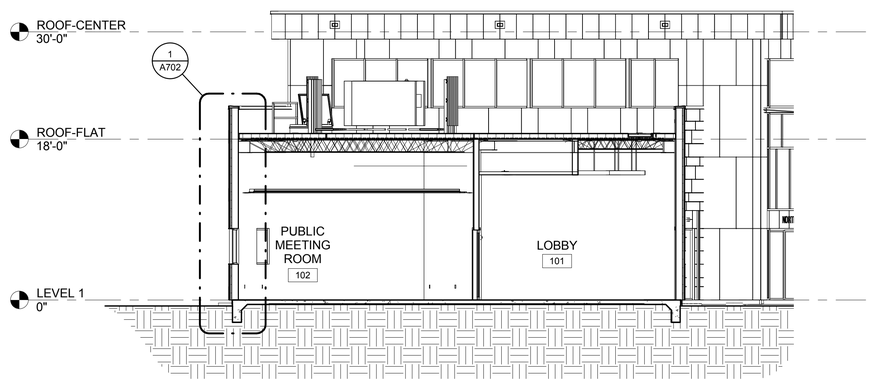

1 BUILDING SECTION 3

1/8" = 1'-0"

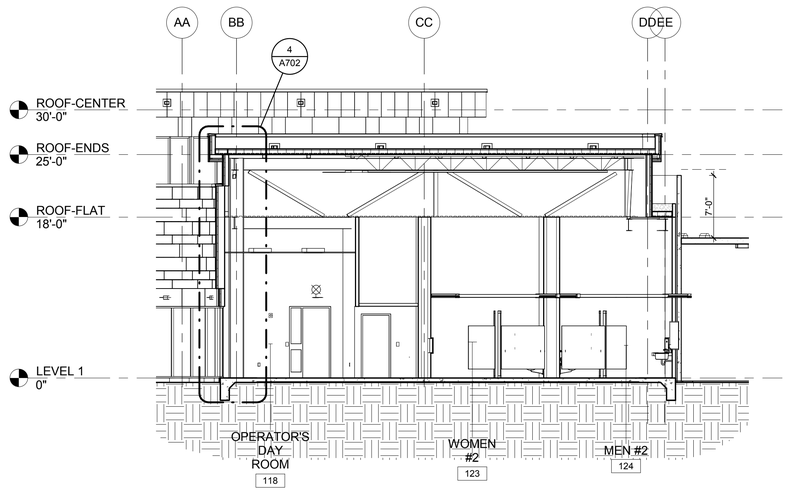

2 BUILDING SECTION 4

1/8" = 1'-0"

100% CONSTRUCTION DOCUMENTS

RNL
1050 17th STREET
SUITE A200
DENVER, CO 80265
303 295 1717 t
303 292 0845 f

REFERENCES – BENCHMARKS

DATE	REVISIONS	BY

ARCHITECT'S SEAL

REGISTERED ARCHITECT
KIMBERLY ANNE MEEK
12937
STATE OF TEXAS

02/05/2016

100% CONSTRUCTION DOCUMENTS

SCALE
HOR: SHOWN
VER: SHOWN

DATE: 05/04/16
DESIGN BY: Designer
DRAWN BY: Author
CHKD BY: Checker
APPD BY: Approver

PROJECT NAME

NORTHGATE TRANSFER CENTER

EL PASO, TEXAS.

CITY OF EL PASO
CAPITAL IMPROVEMENT DEPARTMENT

SHEET TITLE

TRANSFER CENTER SECTIONS

SHEET

A601

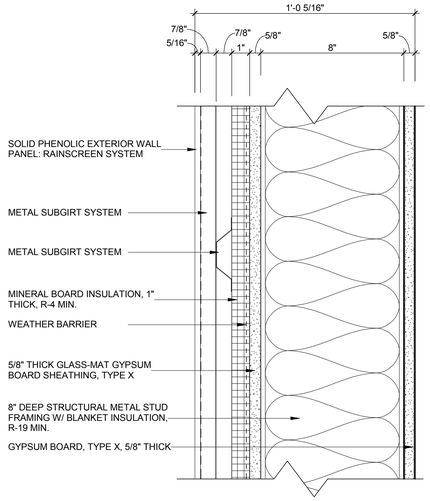

WA03 - SOLID PHENOLIC EXTERIOR WALL PANEL ON 8" METAL STUD

5 3" = 1'-0"

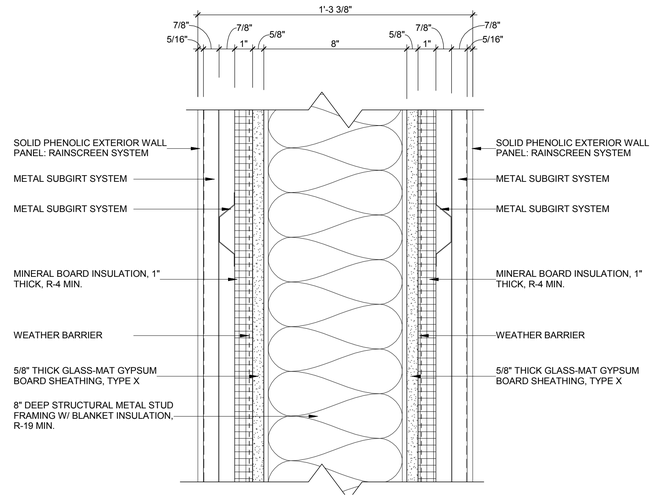

WA03B - SOLID PHENOLIC EXTERIOR WALL PANEL ON 8" METAL STUD

6 3" = 1'-0"

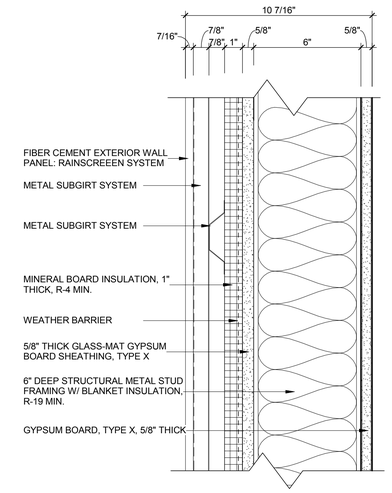

WA04 - FIBER CEMENT PANEL ON 6" METAL STUD

7 3" = 1'-0"

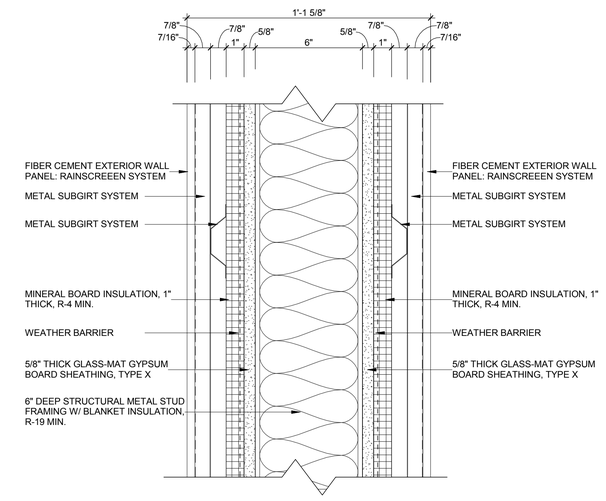

WA04B - FIBER CEMENT PANEL ON 6" METAL STUD

8 3" = 1'-0"

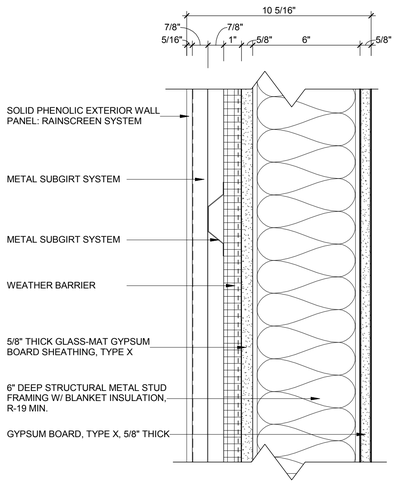

WA01 - SOLID PHENOLIC EXTERIOR WALL PANEL ON 6" METAL STUD

1 3" = 1'-0"

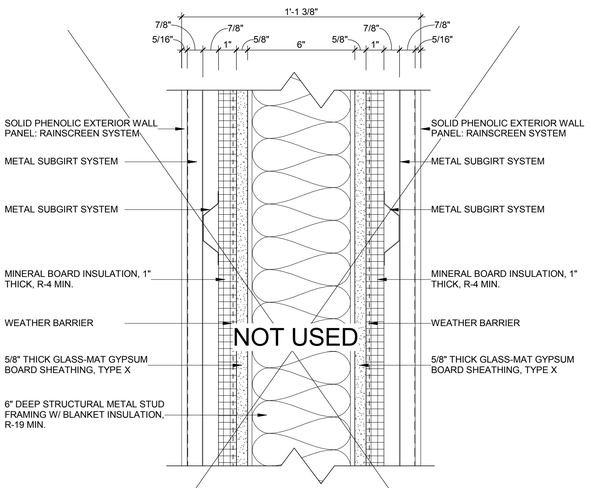

NOT USED

WA01B - SOLID PHENOLIC EXTERIOR WALL PANEL ON 6" METAL STUD

2 3" = 1'-0"

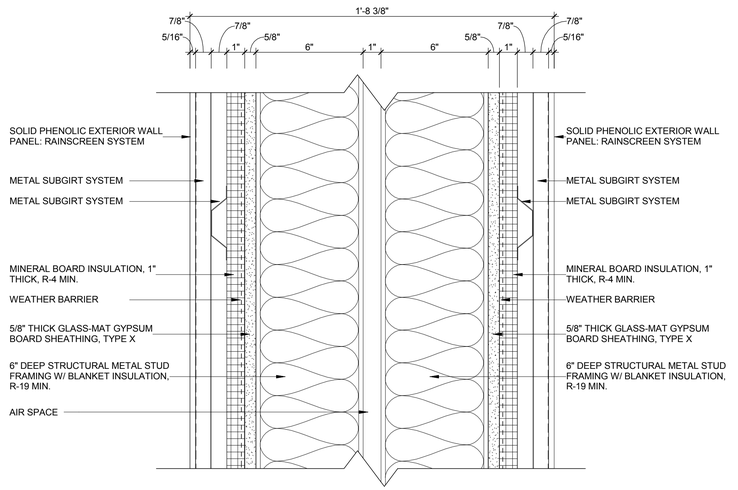

WA01C - SOLID PHENOLIC EXTERIOR WALL PANEL ON 6" METAL STUD

3 3" = 1'-0"

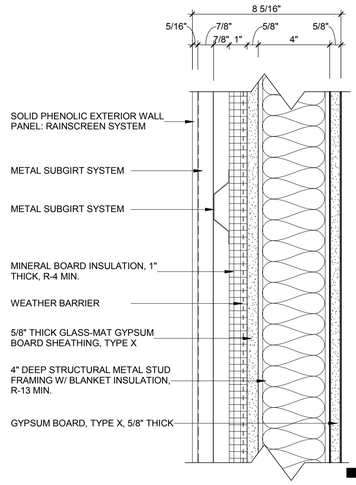

WA02 - SOLID PHENOLIC EXTERIOR WALL PANEL ON 4" METAL STUD

4 3" = 1'-0"

100% CONSTRUCTION DOCUMENTS

RNL
1050 17th STREET
SUITE A200
DENVER, CO 80265
303 295 1717 t
303 292 0845 f

REFERENCES – BENCHMARKS

DATE	REVISIONS	BY

ARCHITECT'S SEAL

REGISTERED ARCHITECT MICHAEL W. RAMIREZ 12937 STATE OF TEXAS

02/05/2016

100% CONSTRUCTION DOCUMENTS

SCALE
HOR: SHOWN
VER: SHOWN

DATE 05/04/16
DESIGN BY Designer
DRAWN BY Author
CHKD BY Checker
APPD BY Approver

PROJECT NAME

NORTHGATE TRANSFER CENTER

EL PASO, TEXAS.

CITY OF EL PASO

CAPITAL IMPROVEMENT DEPARTMENT

THE CITY OF EL PASO TEXAS

SHEET TITLE

TRANSFER CENTER WALL SECTIONS

SHEET

A700

SHEET NOTES	
03.01	CONCRETE SLAB EDGE, RE: STRUCTURAL FOR DETAILS
05.01	6" DEEP STRUCTURAL METAL STUD FRAMING W/ BLANKET INSULATION, R-19 MIN.
05.02	4" DEEP STRUCTURAL METAL STUD FRAMING W/ BLANKET INSULATION, R-13 MIN.
05.03	METAL SUBGIRT SYSTEM
05.09	PERFORATED METAL DECK, SUSPENDED AT HEIGHT OF 19'-7" AFF
06.03	5/8" THICK GLASS-MAT GYPSUM BOARD SHEATHING, TYPE X
07.02	FIBER CEMENT EXTERIOR WALL PANEL: RAINSCREEEN SYSTEM
07.06	FIBER CEMENT PANEL SOFFIT WITH WHITE TPO MEMBRANE ROOFING FULLY ADHERED OVER ½" PROTECTION BOARD ON RIGID INSULATION
07.21	MINERAL BOARD INSULATION, 1" THICK, R-4 MIN.
07.25	WEATHER BARRIER
07.42	METAL PARAPET COPING
07.55	ROOF CRICKET
08.44	ALUMINUM GLAZED CURTAIN WALL
09.04	GYPSUM BOARD, TYPE X, 5/8" THICK
WA04	FIBER CEMENT EXTERIOR WALL PANEL ON METAL SUBGIRT SYSTEM, 1" MINERAL BOARD INSULATION ON WEATHER BARRIER ON 5/8" EXTERIOR SHEATHING, 6" METAL STUD WITH BATT INSULATION, 5/8" GYPSUM SHEATHING
WA04B	FIBER CEMENT EXTERIOR WALL PANEL ON METAL SUBGIRT SYSTEM (EACH SIDE), 1" MINERAL BOARD INSULATION ON WEATHER BARRIER ON 5/8" EXTERIOR SHEATHING (EACH SIDE), 6" METAL STUD WITH BATT INSULATION
WA05	FIBER CEMENT EXTERIOR WALL PANEL ON METAL SUBGIRT SYSTEM, 1" MINERAL BOARD INSULATION ON WEATHER BARRIER ON 5/8" EXTERIOR SHEATHING, 4" METAL STUD WITH BATT INSULATION, 5/8" GYPSUM SHEATHING

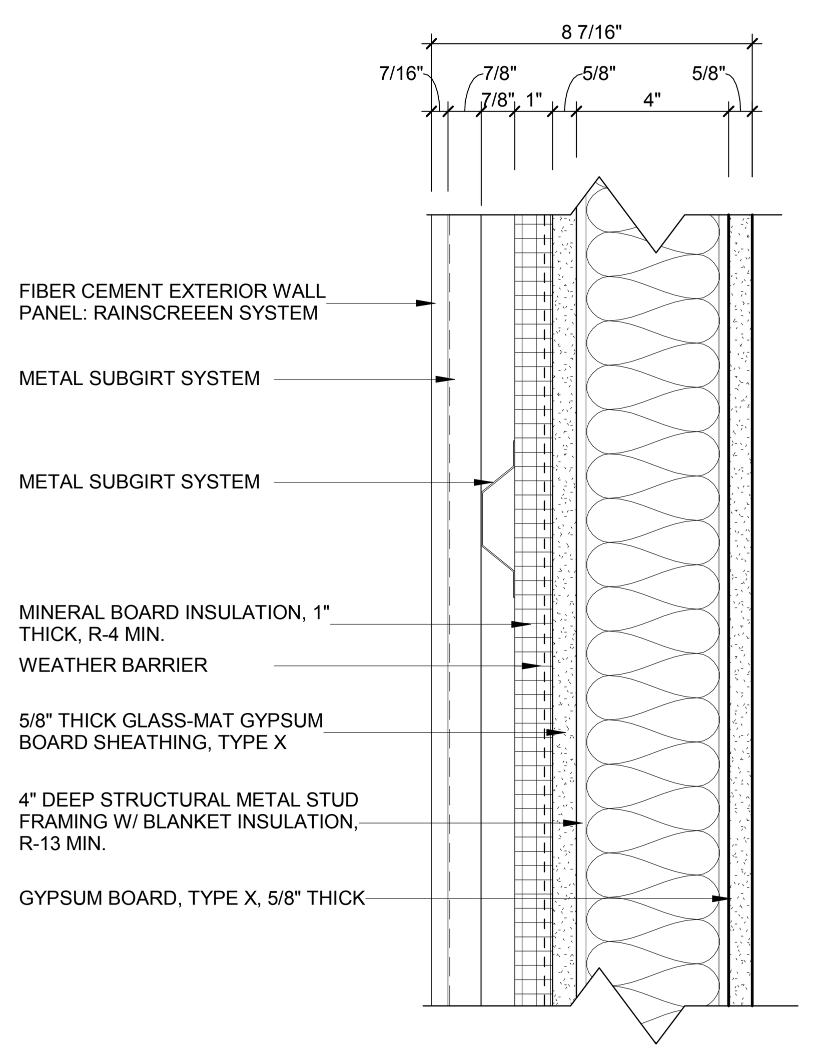

2 WA05 - FIBER CEMENT PANEL ON 4" METAL STUD

3" = 1'-0"

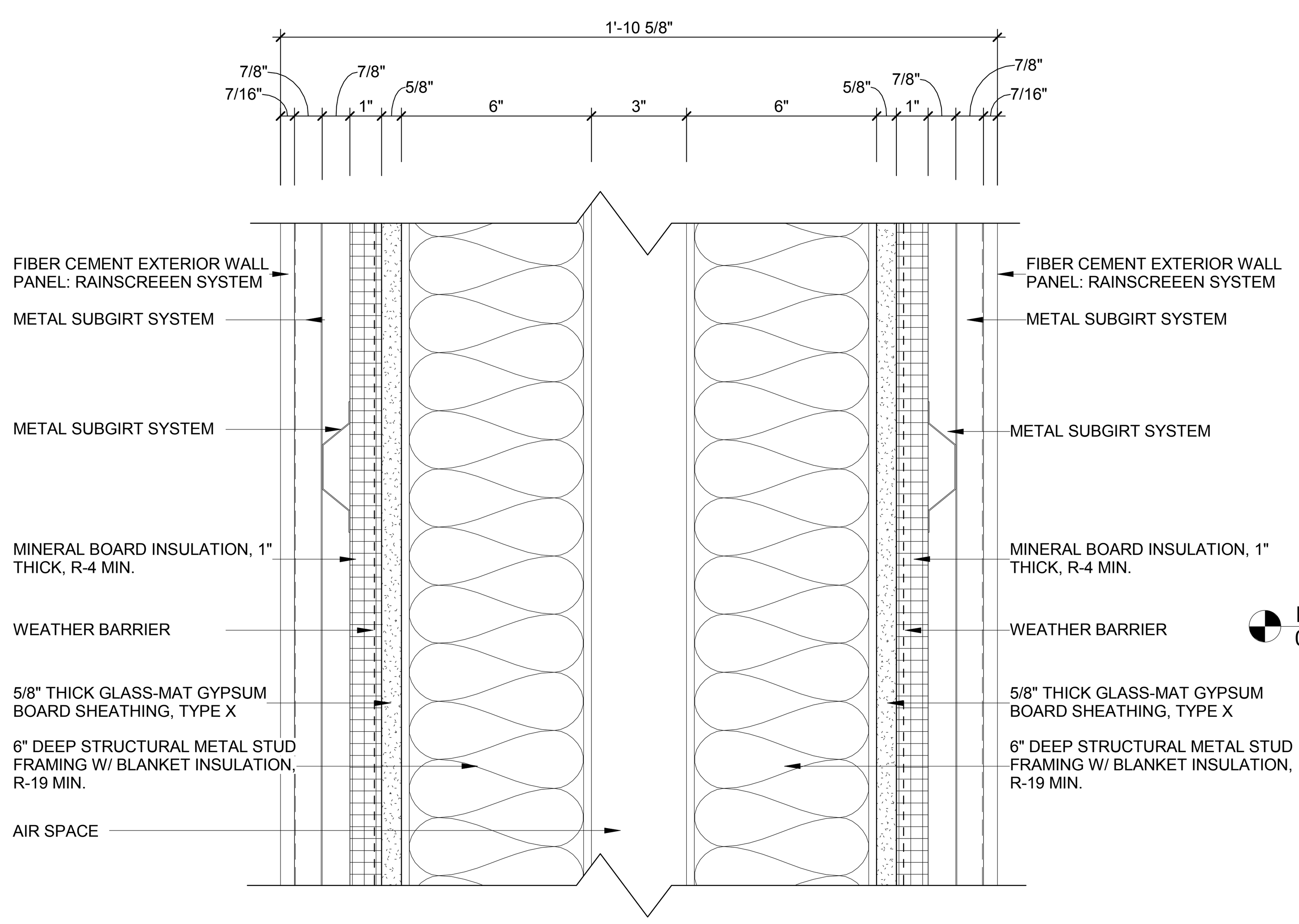

1 WA04C - FIBER CEMENT PANEL ON 6" METAL STUD

3" = 1'-0"

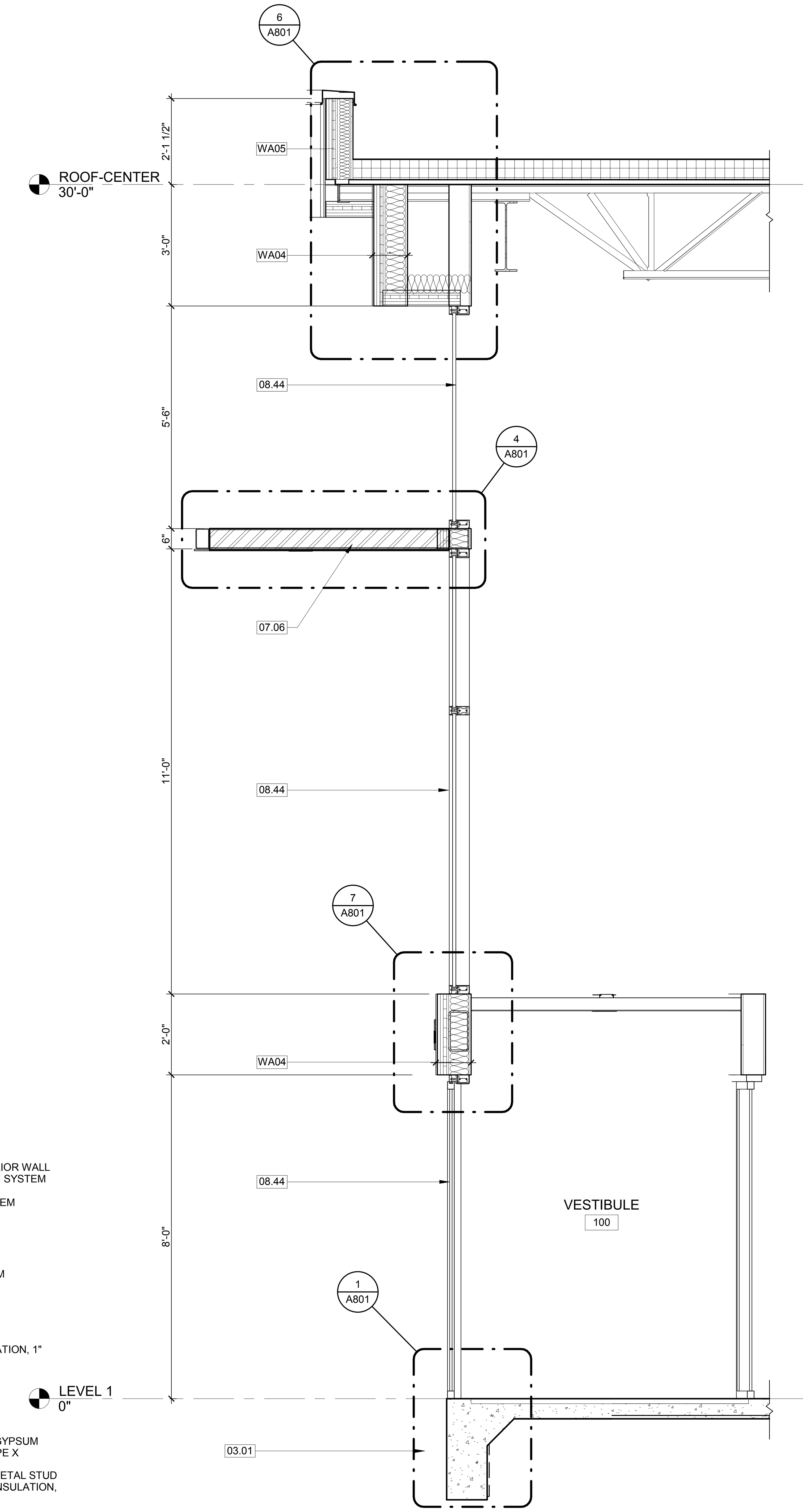

3 WALL SECTION - ENTRY

1/2" = 1'-0"

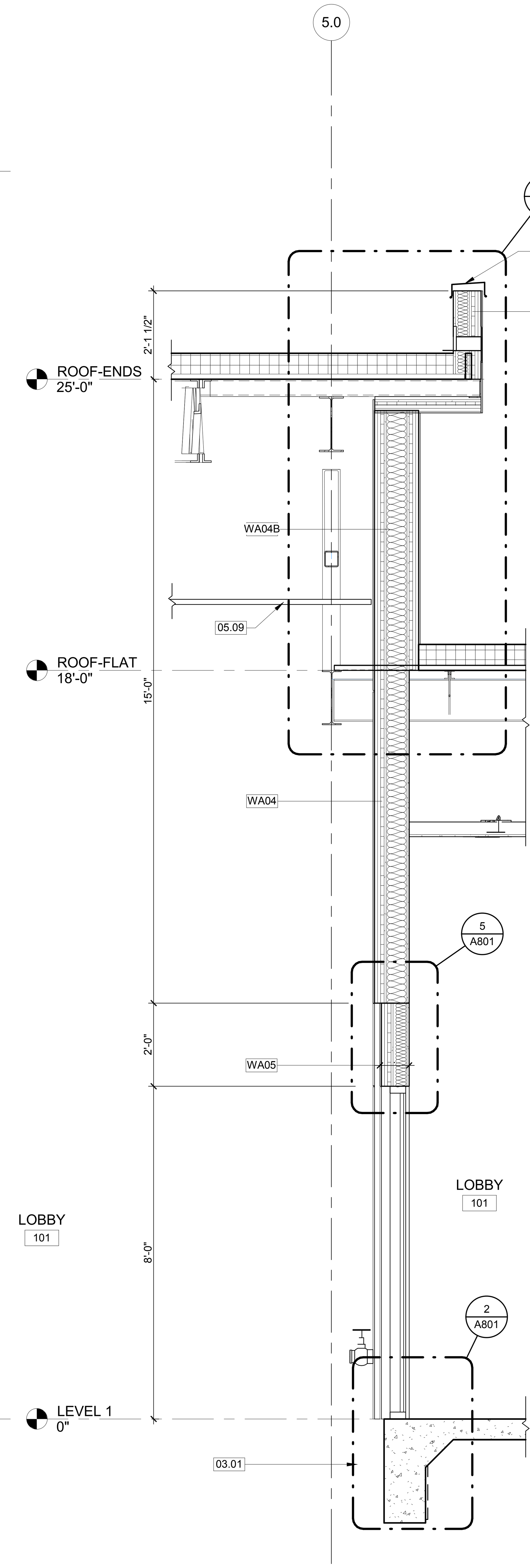

4 WALL SECTION - END WALL - LOBBY

1/2" = 1'-0"

RNL
1050 17th STREET
SUITE A200
DENVER, CO 80265
303 295 1717 t
303 292 0845 f

100% CONSTRUCTION DOCUMENTS

REFERENCES – BENCHMARKS

DATE | REVISIONS | BY

ARCHITECTS SEAL

02/05/2016

SCALE
HOR: SHOWN
VER: SHOWN

DATE: 03/04/16
DESIGN BY: Designer
DRAWN BY: Author
CHKD. BY: Checker
APPD. BY: Approver

PROJECT NAME
NORTHGATE TRANSFER CENTER
EL PASO, TEXAS.

CITY OF EL PASO
CAPITAL IMPROVEMENT DEPARTMENT

SHEET TITLE
TRANSFER CENTER WALL SECTIONS

SHEET
A701

SHEET NOTES	
03.01	CONCRETE SLAB EDGE, RE: STRUCTURAL FOR DETAILS
05.06A	7/16" ALUM. PLATE SURROUND AT WINDOW PERIMETER. COLOR TO MATCH STOREFRONT MULLIONS
07.03	FIBER CEMENT EXTERIOR SOFFIT PANEL: RAINSCREEN SYSTEM
07.04	FIBER CEMENT EXTERIOR FASCIA PANEL: RAINSCREEN SYSTEM
07.42	METAL PARAPET COPING
07.54	WHITE TPO MEMBRANE ROOFING FULLY ADHERED OVER ½" PROTECTION BOARD ON RIGID INSULATION (R-30 MIN.)
07.55	ROOF CRICKET
08.06	OVERHEAD COILING DOOR
08.43	ALUMINUM STOREFRONT SYSTEM, INSIDE-GLAZED
23.02	RECESSED AIR CURTAIN, RE: MECHANICAL
WA02	SOLID PHENOLIC EXTERIOR WALL PANEL ON METAL SUBGIRT SYSTEM, 1" MINERAL BOARD INSULATION ON WEATHER BARRIER ON 5/8" EXTERIOR SHEATHING, 4" METAL STUD WITH BATT INSULATION, 5/8" GYPSUM SHEATHING
WA03	SOLID PHENOLIC EXTERIOR WALL PANEL ON METAL SUBGIRT SYSTEM, 1" MINERAL BOARD INSULATION ON WEATHER BARRIER ON 5/8" EXTERIOR SHEATHING, 8" METAL STUD WITH BATT INSULATION, 5/8" GYPSUM SHEATHING
WA04	FIBER CEMENT EXTERIOR WALL PANEL ON METAL SUBGIRT SYSTEM, 1" MINERAL BOARD INSULATION ON WEATHER BARRIER ON 5/8" EXTERIOR SHEATHING, 6" METAL STUD WITH BATT INSULATION, 5/8" GYPSUM SHEATHING
WA05	FIBER CEMENT EXTERIOR WALL PANEL ON METAL SUBGIRT SYSTEM, 1" MINERAL BOARD INSULATION ON WEATHER BARRIER ON 5/8" EXTERIOR SHEATHING, 4" METAL STUD WITH BATT INSULATION, 5/8" GYPSUM SHEATHING

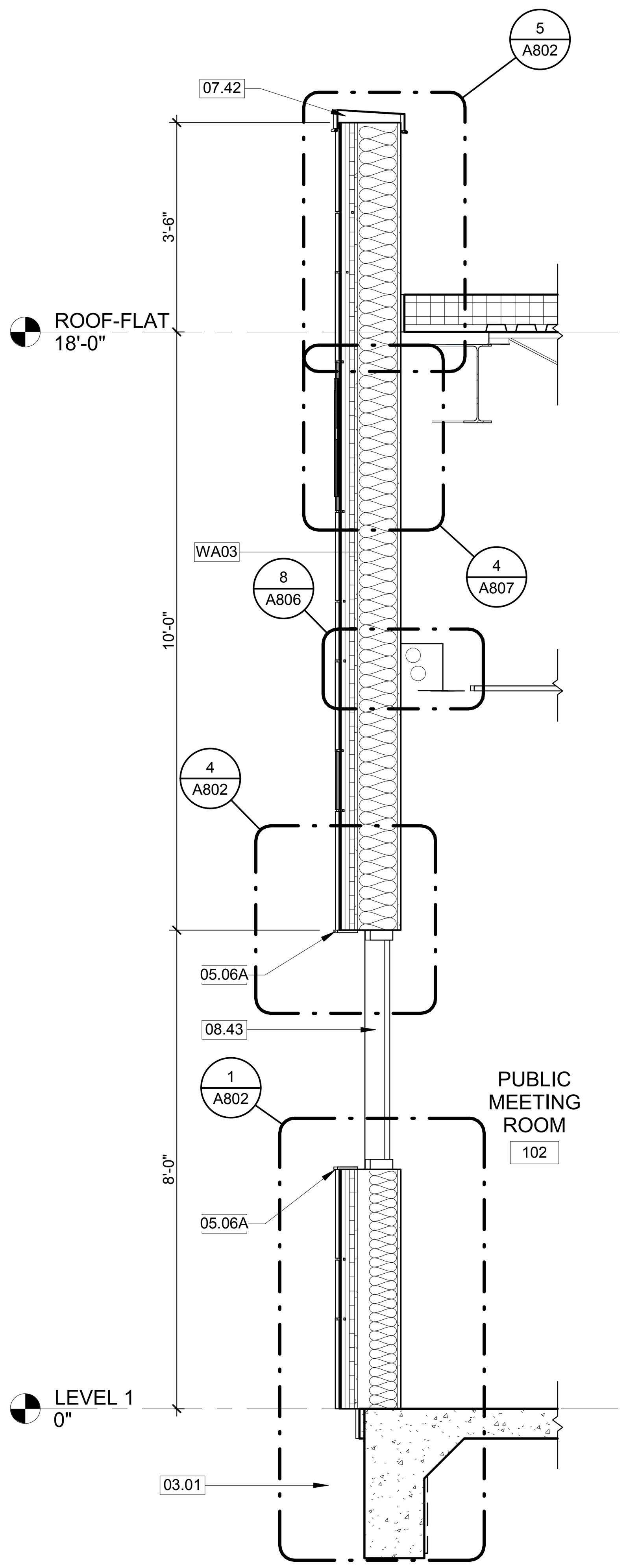

1 WALL SECTION - PUBLIC MEETING ROOM
1/2" = 1'-0"

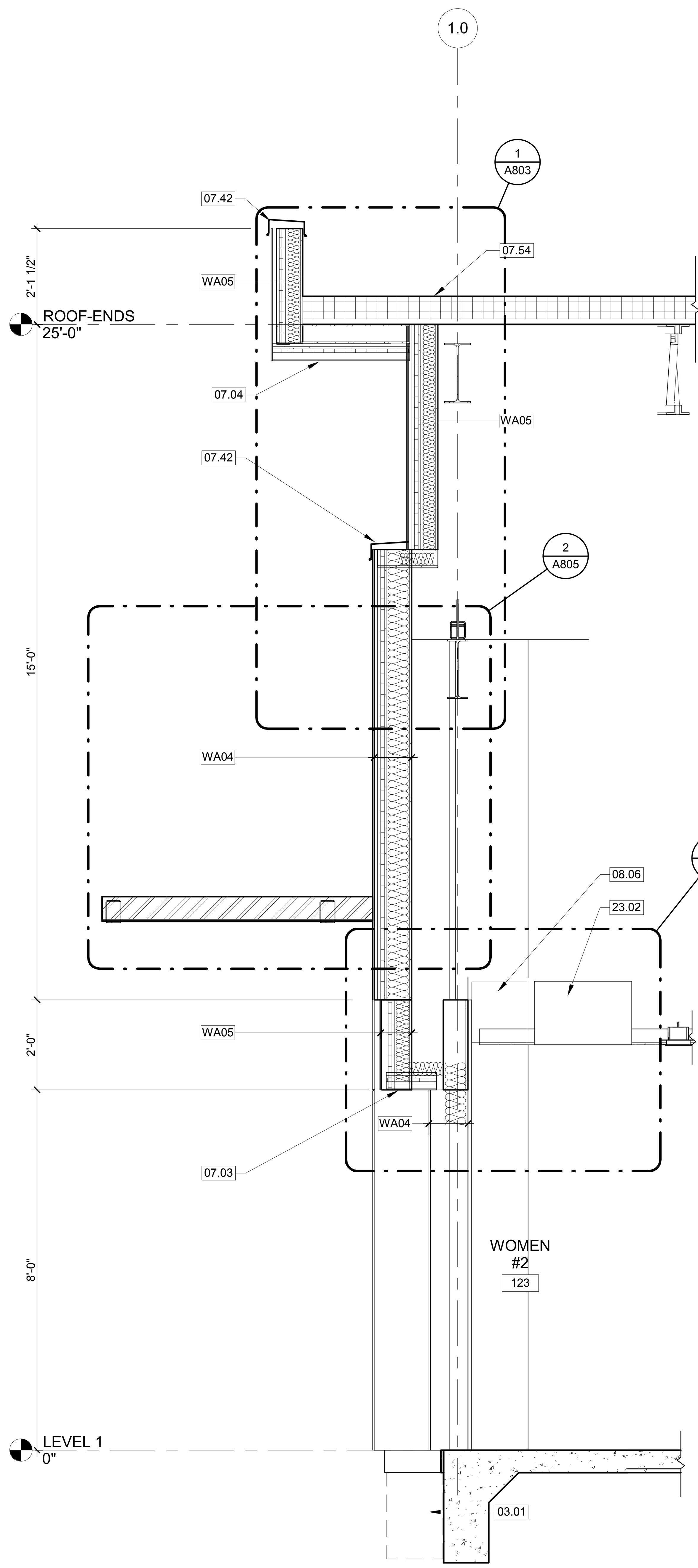

2 WALL SECTION - END WALL - RESTROOM ENTRY
1/2" = 1'-0"

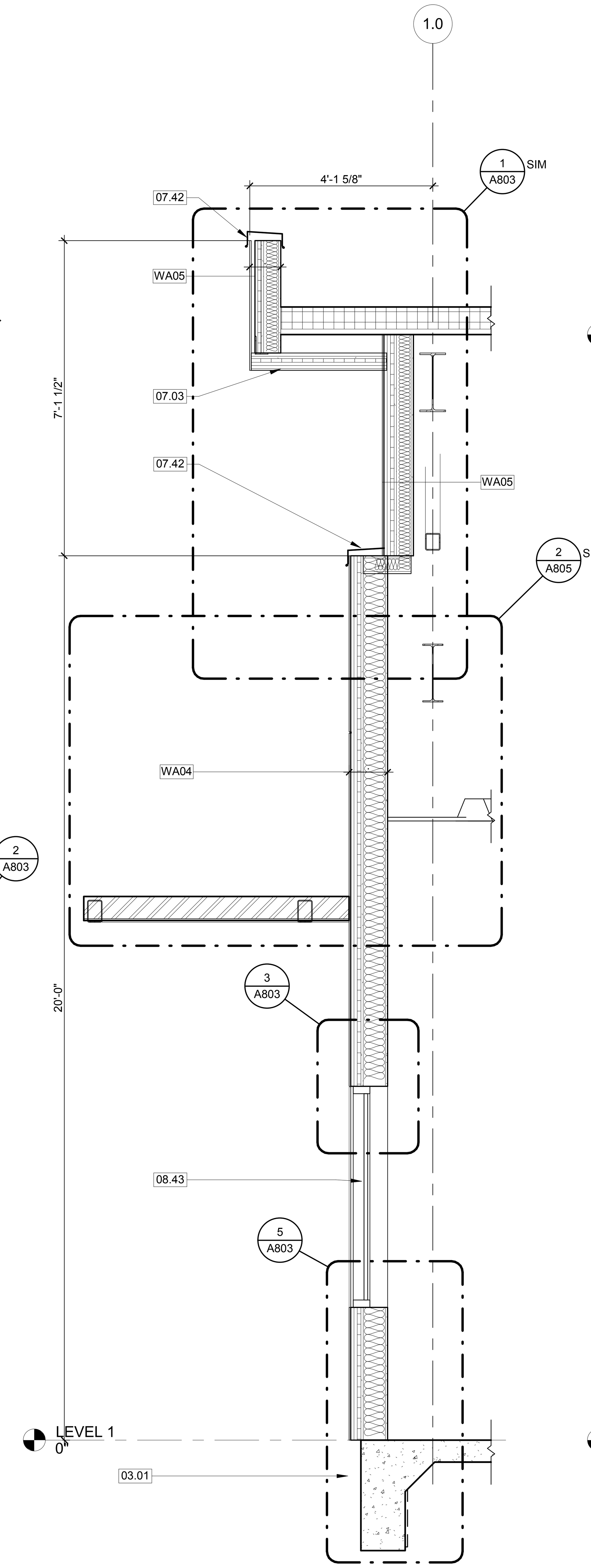

3 WALL SECTION - END WALL - OPERATOR'S DAY ROOM
1/2" = 1'-0"

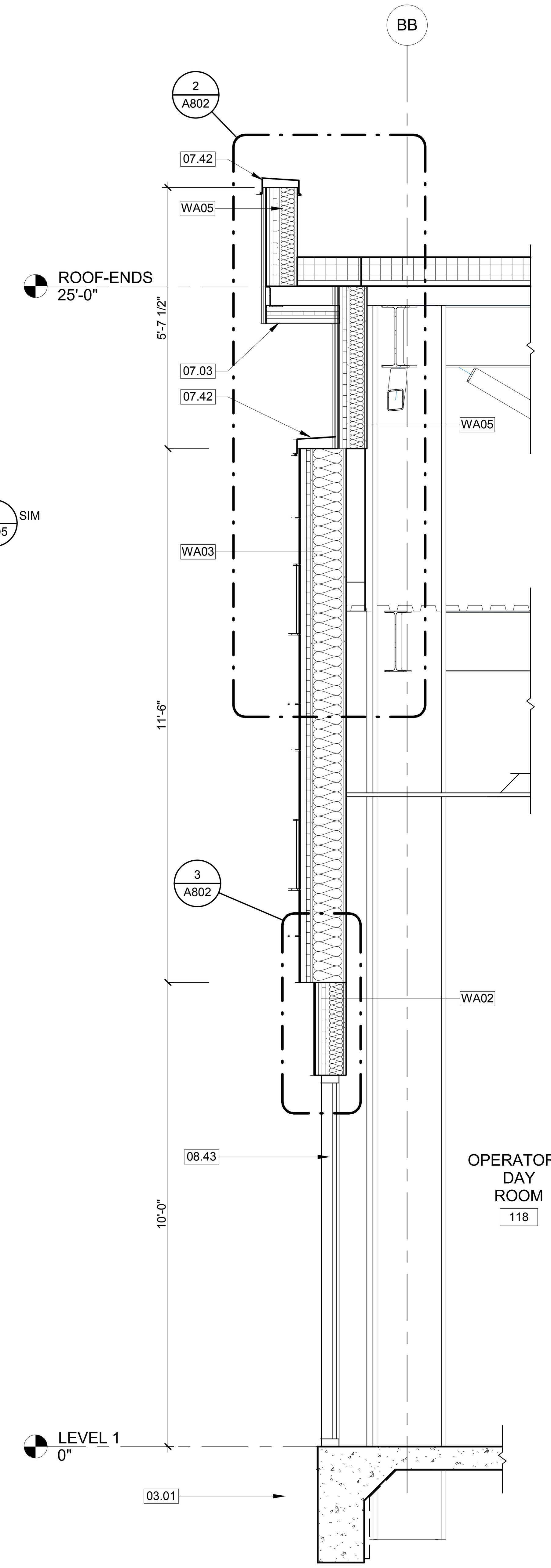

4 WALL SECTION - CURVED WALL - OPERATOR'S DAY ROOM
1/2" = 1'-0"

RNL
1050 17th STREET
SUITE A200
DENVER, CO 80265
303 295 1717 t
303 292 0845 f

100% CONSTRUCTION DOCUMENTS

REFERENCES – BENCHMARKS
REVISIONS
DATE
BY

ARCHITECTS SEAL
02/05/2016

SCALE
HOR: SHOWN
VER: SHOWN

PROJECT NAME
NORTHGATE TRANSFER CENTER
EL PASO, TEXAS.

CITY OF EL PASO
CAPITAL IMPROVEMENT DEPARTMENT

SHEET TITLE
TRANSFER CENTER WALL SECTIONS

SHEET
A702

SHEET NOTES	
03.01	CONCRETE SLAB EDGE, RE: STRUCTURAL FOR DETAILS
05.04	EXPANDED METAL PANEL CANOPY
05.05	ALUMINUM METAL SCREEN. MANUFACTURER'S PAINTED FINISH
05.09	PERFORATED METAL DECK, SUSPENDED AT HEIGHT OF 19'-7" AFF
07.03	FIBER CEMENT EXTERIOR SOFFIT PANEL: RAINSCREEN SYSTEM
07.42	METAL PARAPET COPING
07.54	WHITE TPO MEMBRANE ROOFING FULLY ADHERED OVER ½" PROTECTION BOARD ON RIGID INSULATION (R-30 MIN.)
08.43	ALUMINUM STOREFRONT SYSTEM, INSIDE-GLAZED
23.01	8FT DIAMETER BIG ASS FAN
WA04	FIBER CEMENT EXTERIOR WALL PANEL ON METAL SUBGIRT SYSTEM, 1" MINERAL BOARD INSULATION ON WEATHER BARRIER ON 5/8" EXTERIOR SHEATHING, 6" METAL STUD WITH BATT INSULATION, 5/8" GYPSUM SHEATHING
WA05	FIBER CEMENT EXTERIOR WALL PANEL ON METAL SUBGIRT SYSTEM, 1" MINERAL BOARD INSULATION ON WEATHER BARRIER ON 5/8" EXTERIOR SHEATHING, 4" METAL STUD WITH BATT INSULATION, 5/8" GYPSUM SHEATHING

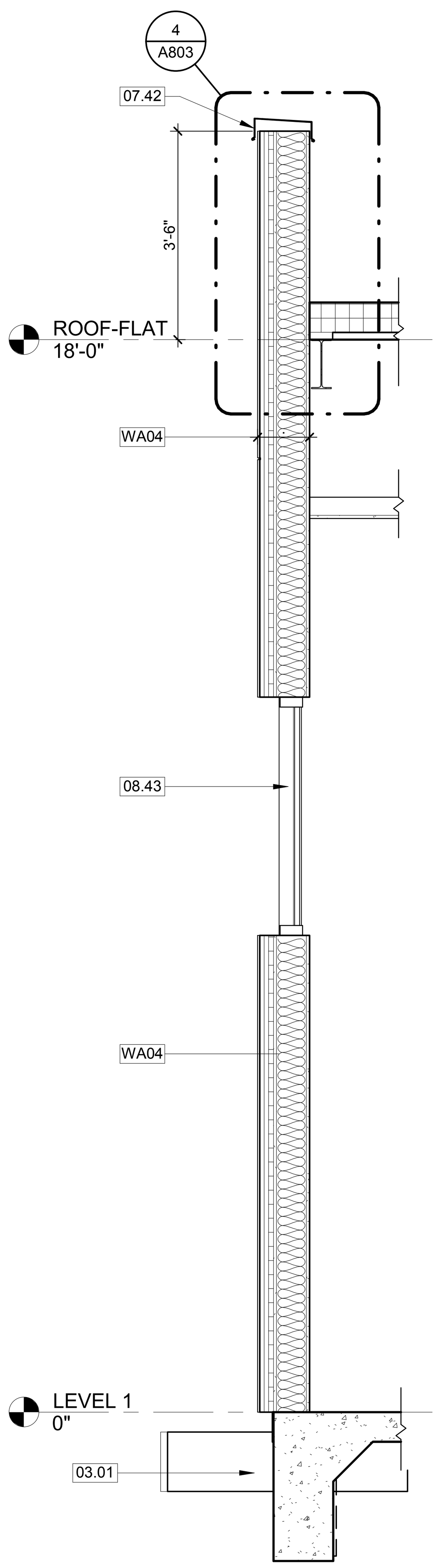

1 WALL SECTION - BACK VESTIBULE
1/2" = 1'-0"

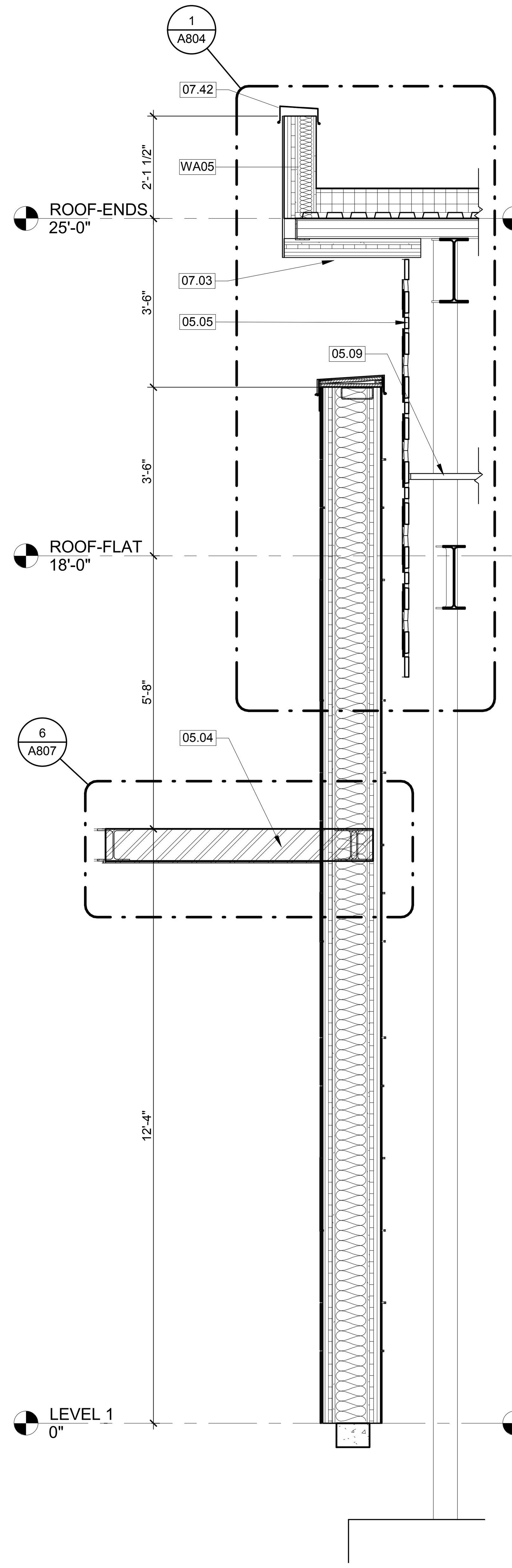

2 WALL SECTION - PATIO SOUTH WALL
1/2" = 1'-0"

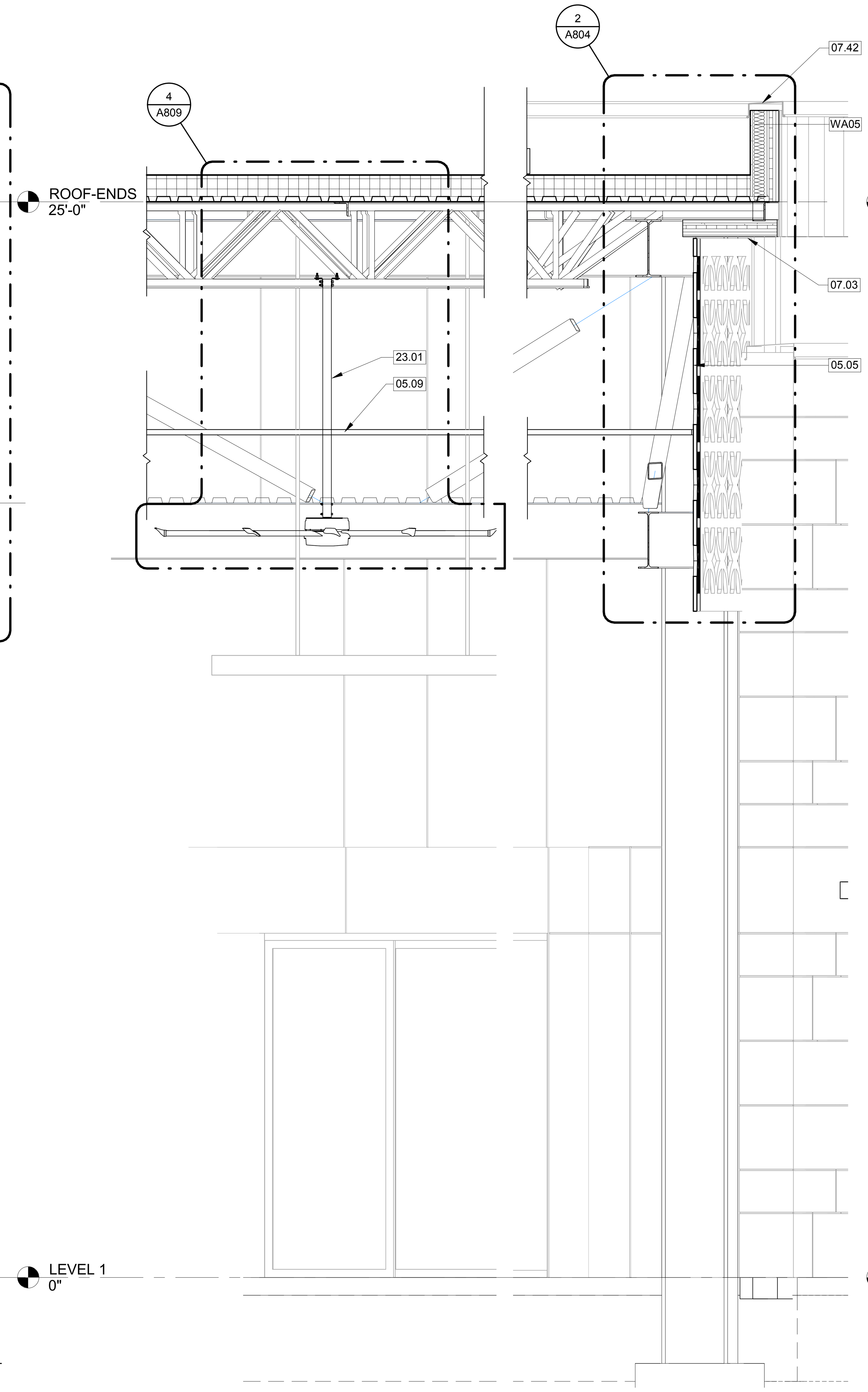

3 WALL SECTION - PATIO PLAZA WALL
1/2" = 1'-0"

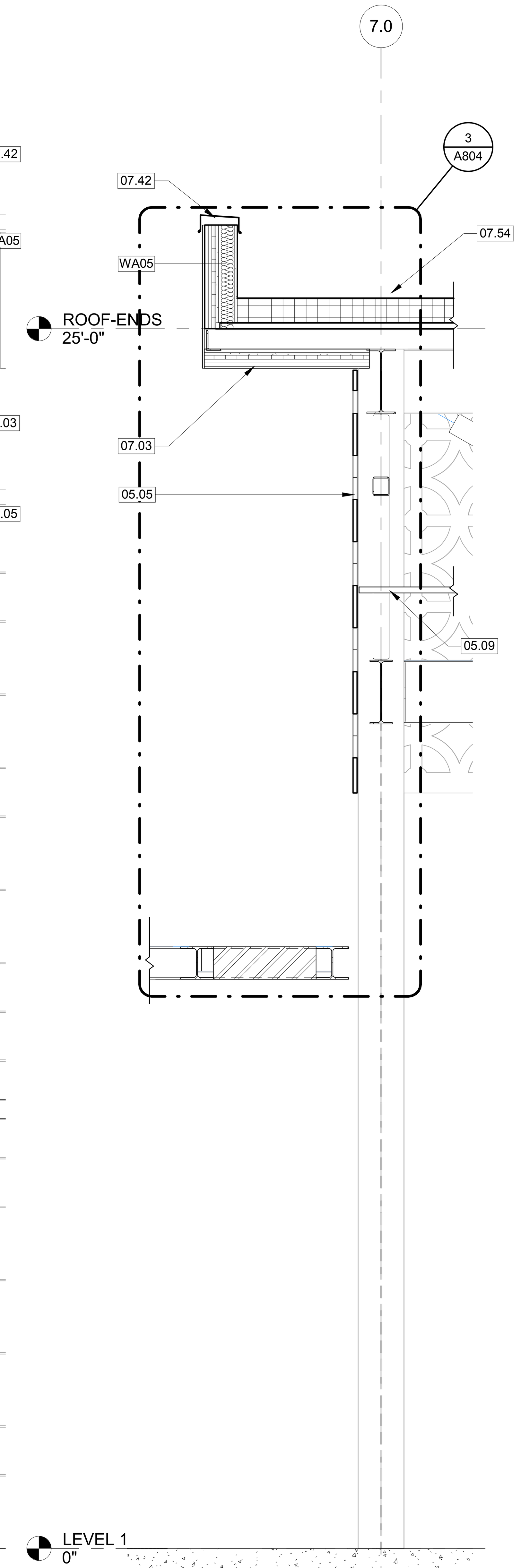

4 WALL SECTION - PATIO EAST SCREENS & CANOPY
1/2" = 1'-0"

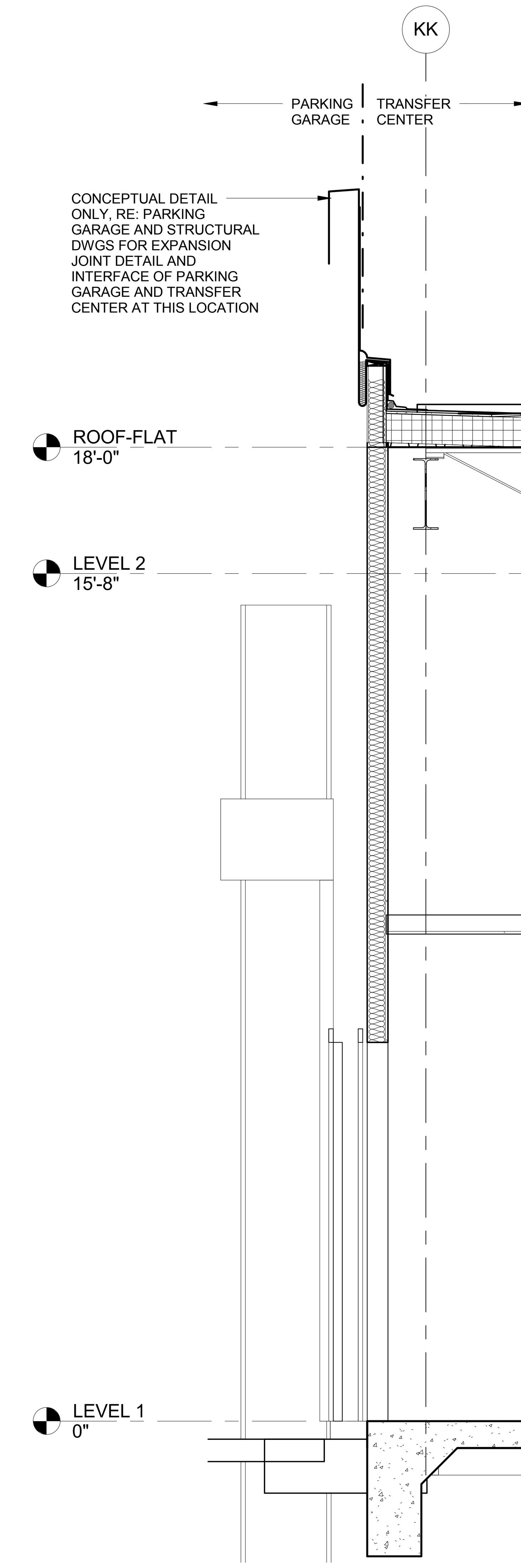

5 WALL SECTION - EXPANSION JOINT
1/2" = 1'-0"

RNL
1050 17th STREET
SUITE A200
DENVER, CO 80265
303 295 1717 t
303 292 0845 f

100% CONSTRUCTION DOCUMENTS

REFERENCES – BENCHMARKS

REVISIONS | DATE | BY

ARCHITECTS SEAL

02/05/2016

SCALE
HOR: SHOWN
VER: SHOWN

DATE: 02/05/16
DESIGN BY: Designer
DRAWN BY: Author
CHKD. BY: Checker
APPD. BY: Approver

PROJECT NAME

NORTHGATE TRANSFER CENTER

EL PASO, TEXAS.

CITY OF EL PASO

CAPITAL IMPROVEMENT DEPARTMENT

SHEET TITLE

TRANSFER CENTER WALL SECTIONS

SHEET

A703

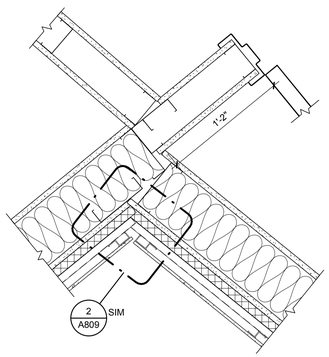

6 PLAN DETAIL - SP-FC CORNER

1 1/2" = 1'-0"

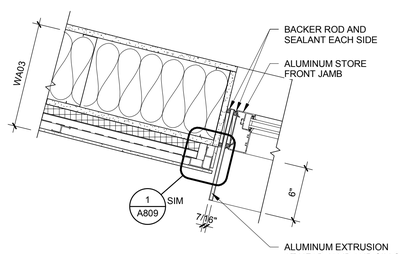

7 WINDOW SHADOW BOX JAMB

1 1/2" = 1'-0"

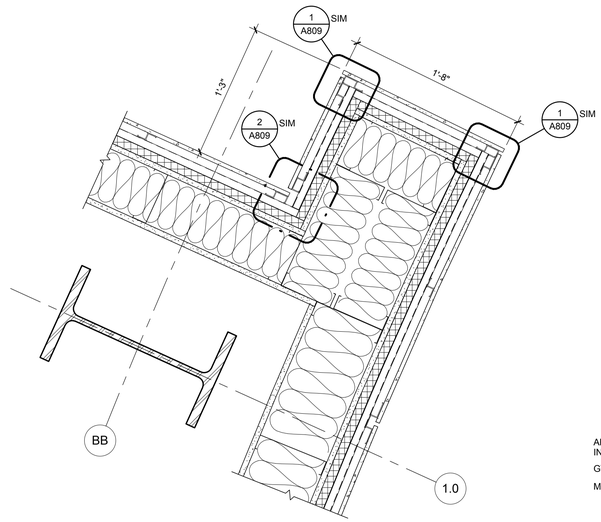

8 CURVED WALL END - NORTH

1 1/2" = 1'-0"

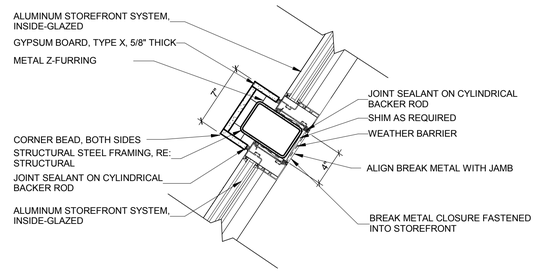

5 PLAN DETAIL - CLERESTORY JAMB

1 1/2" = 1'-0"

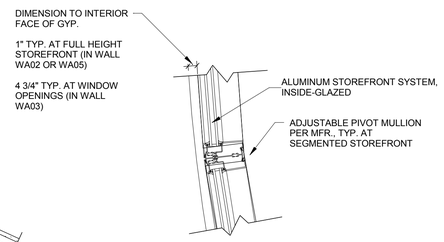

4 PLAN DETAIL - SEGEMENTED STOREFRONT

1 1/2" = 1'-0"

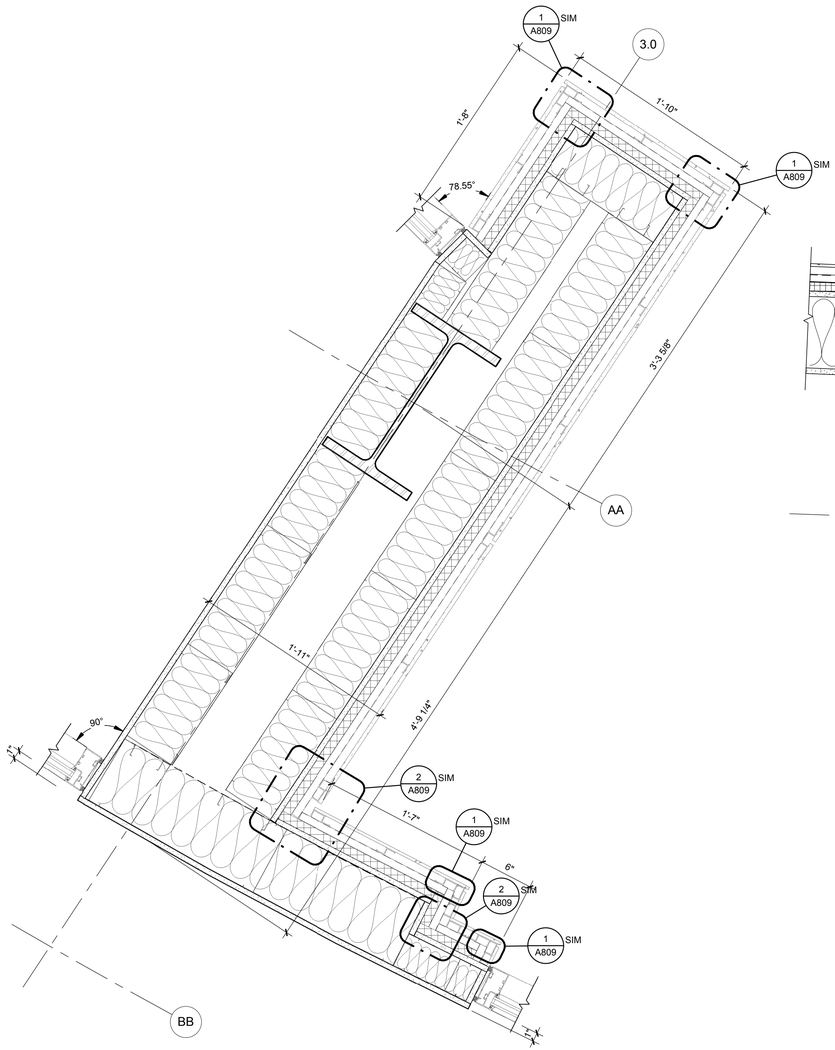

1 ENTRY WALL END - EAST

1 1/2" = 1'-0"

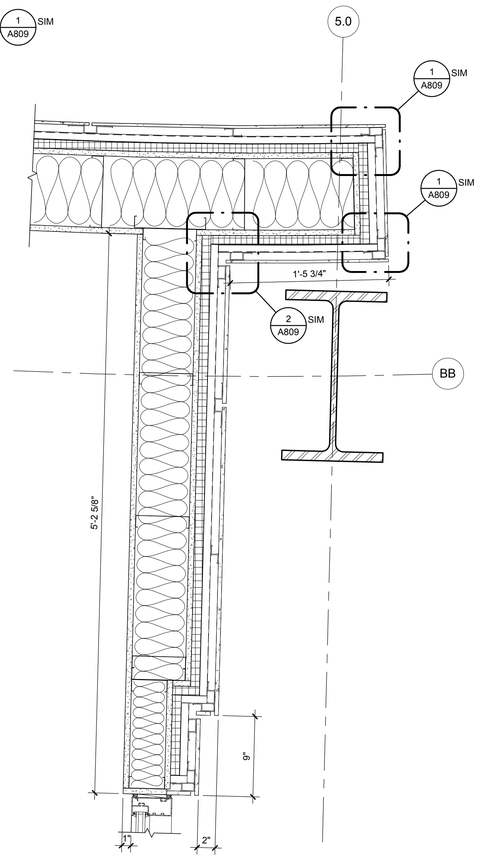

2 CURVED WALL END - SOUTH

1 1/2" = 1'-0"

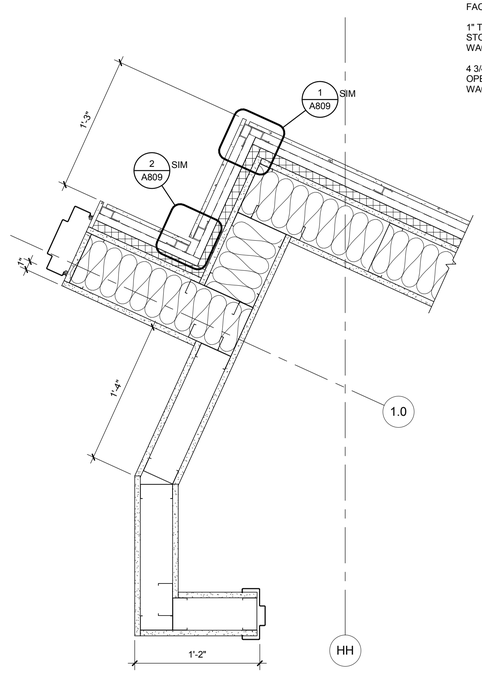

3 FCB CORNER - JANITOR CLOSET

1 1/2" = 1'-0"

100% CONSTRUCTION DOCUMENTS

RNL
1050 17th STREET
SUITE A200
DENVER, CO 80265
303 295 1717 t
303 292 0845 f

REFERENCES – BENCHMARKS

BY	REVISIONS	DATE

ARCHITECT'S SEAL

REGISTERED ARCHITECT MICHAEL A. MEYER 12937 STATE OF TEXAS

02/05/2016

100% CONSTRUCTION DOCUMENTS

SCALE
HOR: SHOWN
VER: SHOWN

DATE: 05/24/16
DESIGN BY: Designer
DRAWN BY: Author
CHKD BY: Checker
APPD BY: Approver

PROJECT NAME
NORTHGATE TRANSFER CENTER
EL PASO, TEXAS.

CITY OF EL PASO
CAPITAL IMPROVEMENT DEPARTMENT

SHEET TITLE
TRANSFER CENTER PLAN DETAILS

SHEET
A800

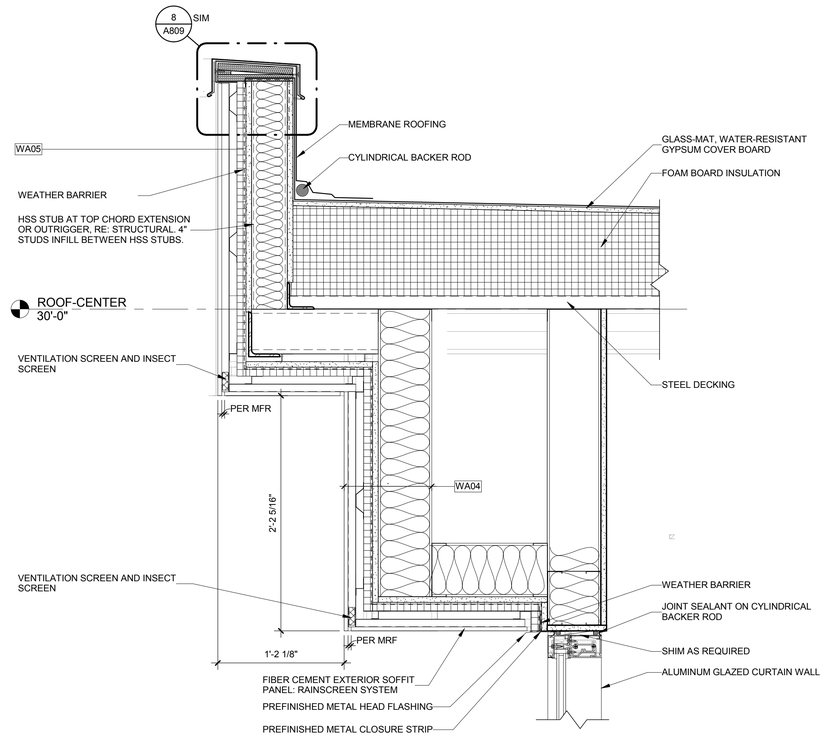

6 SECTION DETAIL - SOFFIT AND PARAPET AT ENTRY

1 1/2" = 1'-0"

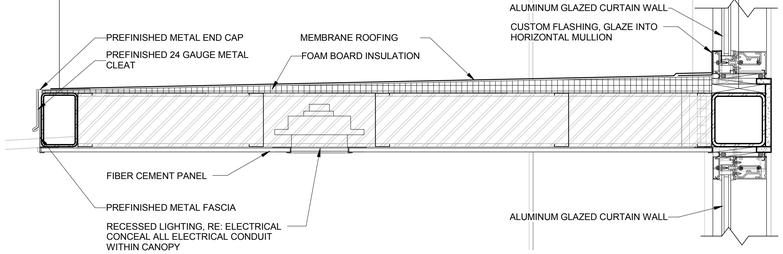

4 SECTION DETAIL - CANOPY AT ENTRY

1 1/2" = 1'-0"

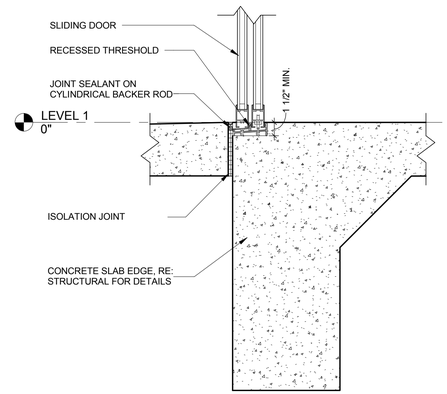

1 SECTION DETAIL - DOOR SILL

1 1/2" = 1'-0"

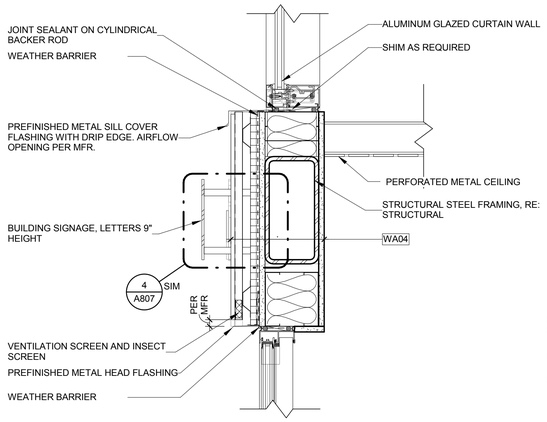

7 SECTION DETAIL - FC PANEL AT ENTRY

1 1/2" = 1'-0"

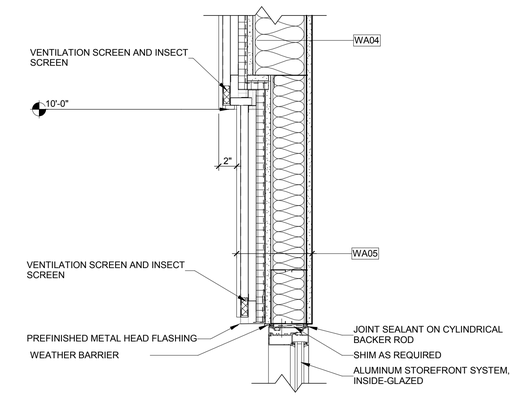

5 SECTION DETAIL - FC INSET

1 1/2" = 1'-0"

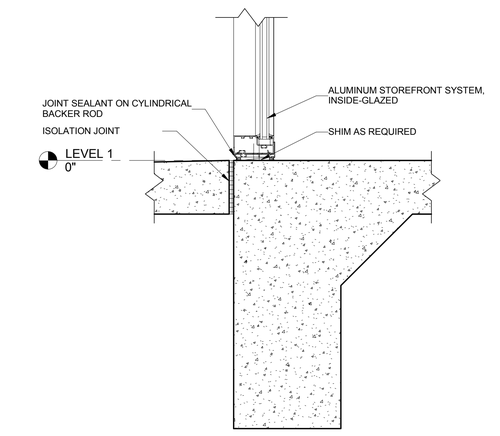

2 SECTION DETAIL - STOREFRONT SILL

1 1/2" = 1'-0"

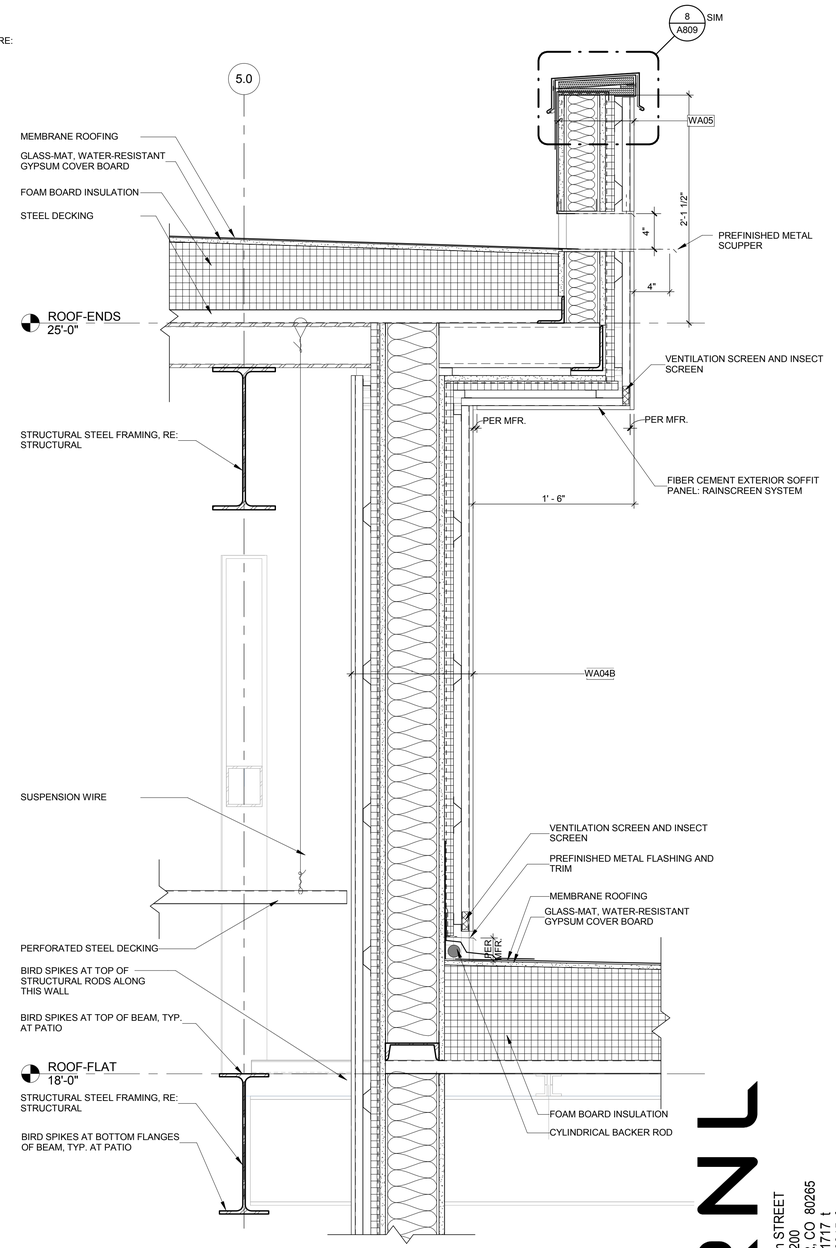

3 SECTION DETAIL - PARAPET AT PATIO

1 1/2" = 1'-0"

100% CONSTRUCTION DOCUMENTS

RNL
1050 17th STREET
SUITE A200
DENVER, CO 80265
303 295 1717 t
303 292 0845 f

REFERENCES – BENCHMARKS

DATE	REVISIONS	BY

ARCHITECT'S SEAL

02/05/2016

100% CONSTRUCTION DOCUMENTS

SCALE
HOR: SEE DWG
VER: SEE DWG

DATE 05/24/16
DESIGN BY Designer
DRAWN BY Author
CHKD BY Checker
APPD BY Approver

PROJECT NAME

NORTHGATE TRANSFER CENTER

EL PASO, TEXAS.

CITY OF EL PASO
CAPITAL IMPROVEMENT DEPARTMENT

SHEET TITLE

TRANSFER CENTER SECTION DETAILS

SHEET
A801

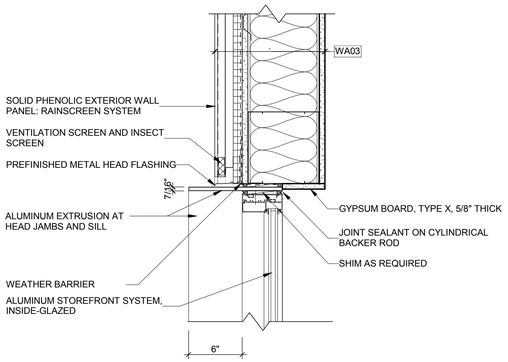

4 SECTION DETAIL - SP HEAD AND SHADOW BOX

1 1/2" = 1'-0"

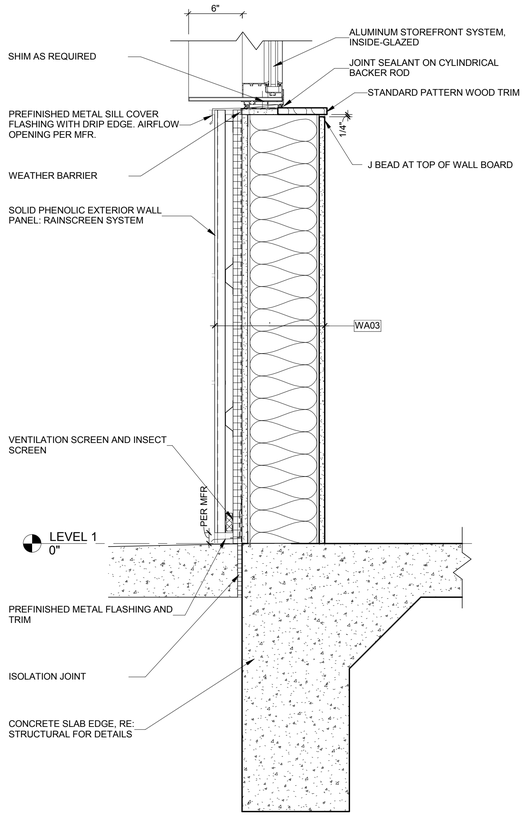

1 SECTION DETAIL - SP SILL AND SHADOW BOX

1 1/2" = 1'-0"

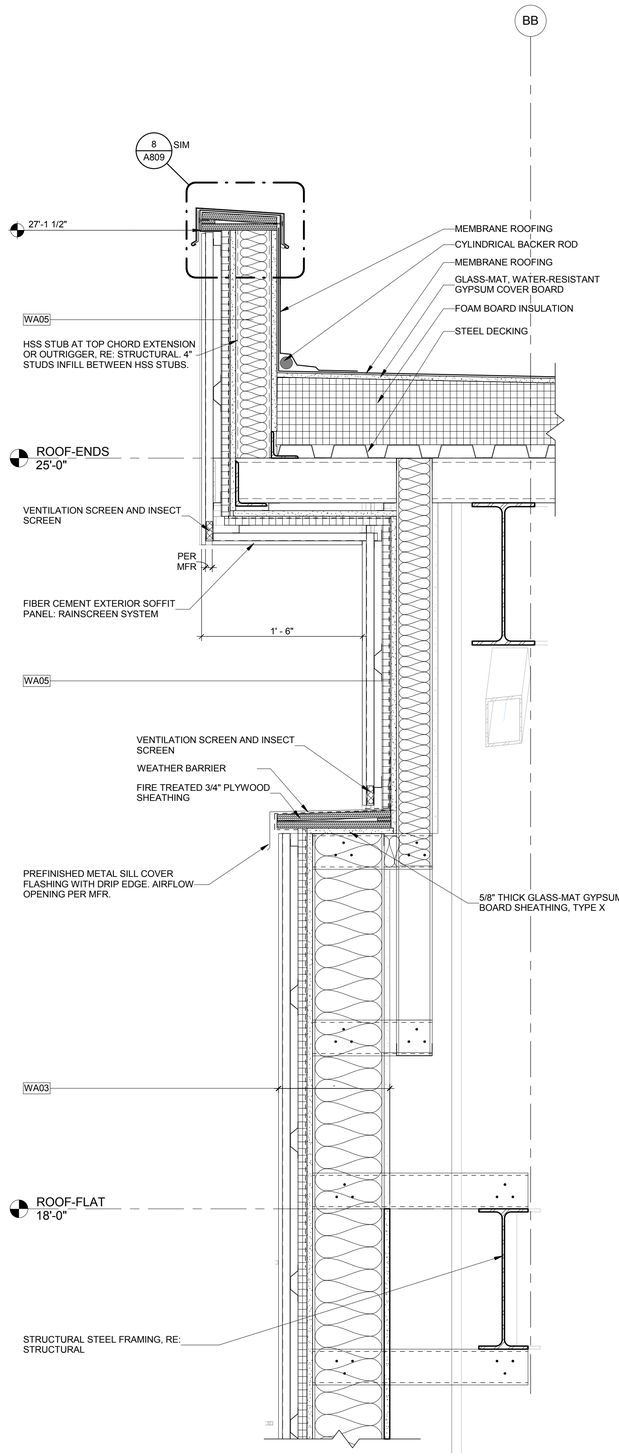

2 SECTION - FC PARAPET AT CURVED WALL

1 1/2" = 1'-0"

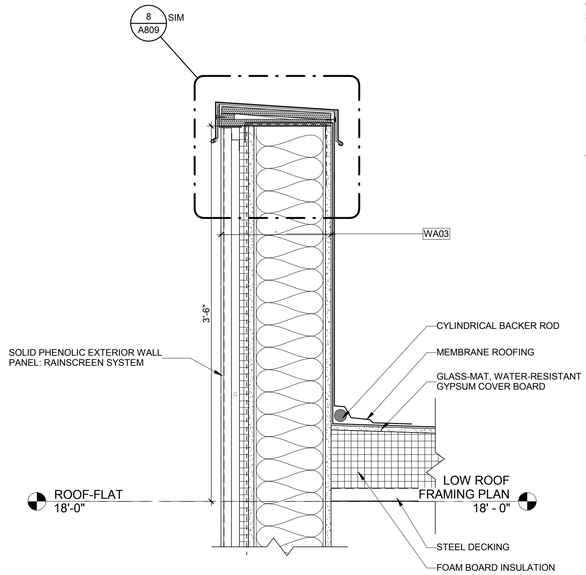

5 SECTION DETAIL - SP PARAPET AT CURVED WALL

1 1/2" = 1'-0"

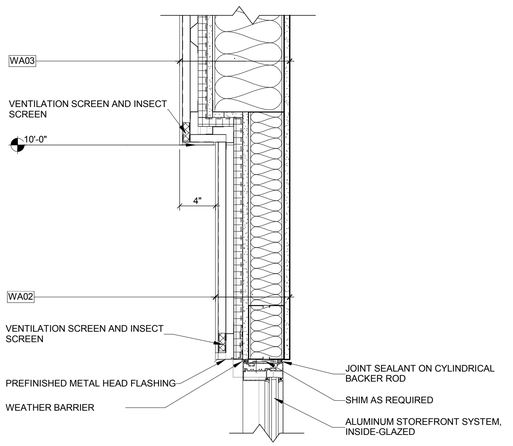

3 SECTION DETAIL - SP INSET AT CURVED WALL

1 1/2" = 1'-0"

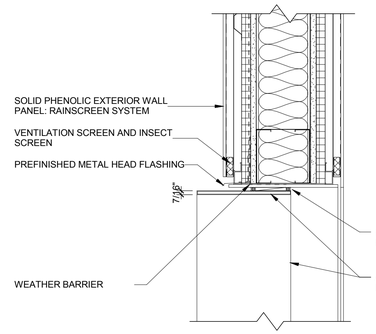

7 FC SHADOW BOX HEAD

1 1/2" = 1'-0"

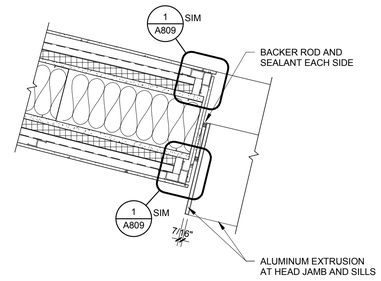

6 FC SHADOW BOX JAMB

1 1/2" = 1'-0"

REFERENCES – BENCHMARKS

BY	REVISIONS	DATE

ARCHITECT'S SEAL

REGISTERED ARCHITECT — STATE OF TEXAS — 12937

02/05/2016

100% CONSTRUCTION DOCUMENTS

SCALE
HOR: SHOWN
VER: SHOWN

DATE 05/4/15
DESIGN BY Designer
DRAWN BY Author
CHKD BY Checker
APPD BY Approver

PROJECT NAME

NORTHGATE TRANSFER CENTER

EL PASO, TEXAS.

CITY OF EL PASO

CAPITAL IMPROVEMENT DEPARTMENT

THE CITY OF EL PASO TEXAS

SHEET TITLE

TRANSFER CENTER SECTION DETAILS

SHEET

A802

RNL
1050 17th STREET
SUITE A200
DENVER, CO 80265
303 295 1717 t
303 292 0845 f

100% CONSTRUCTION DOCUMENTS

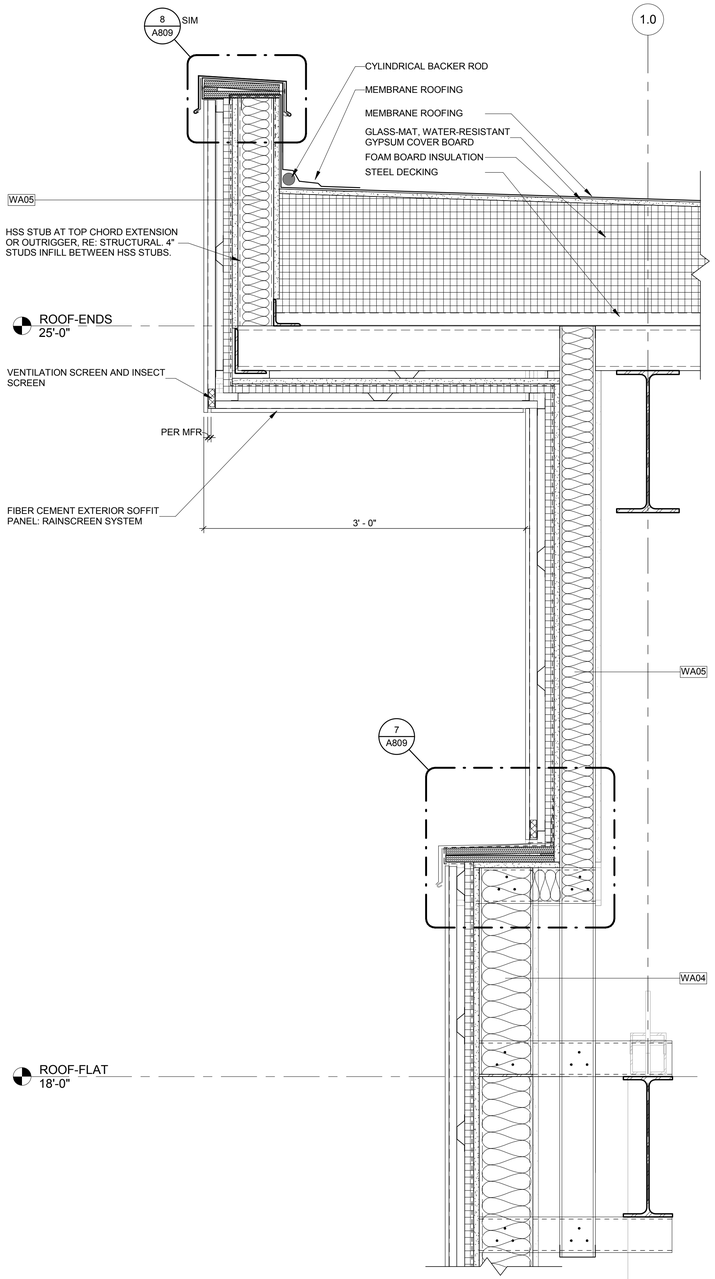

1 SECTION DETAIL - FC PARAPET AT N END WALL

1 1/2" = 1'-0"

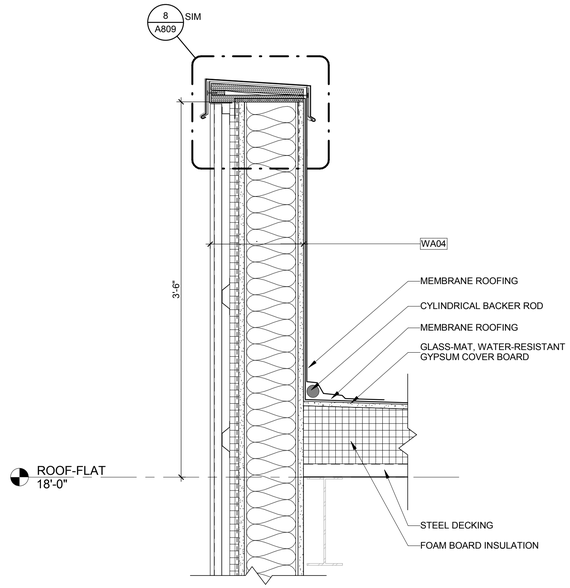

4 SECTION DETAIL - FC AT HIGH PARAPET

1 1/2" = 1'-0"

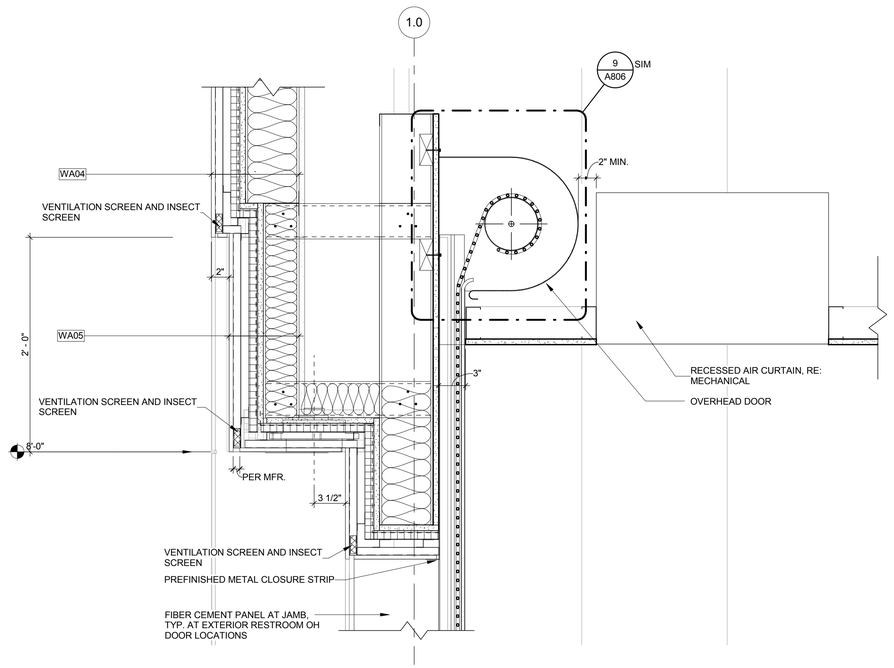

2 SECTION DETAIL - SOFFIT AND FC INSET AT RESTROOM ENTRY

1 1/2" = 1'-0"

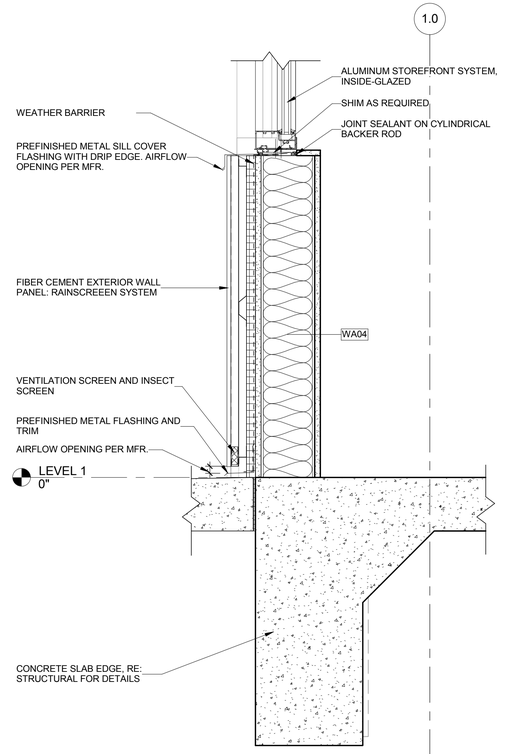

5 SECTION DETAIL - FC BASE & SILL AT FCB

1 1/2" = 1'-0"

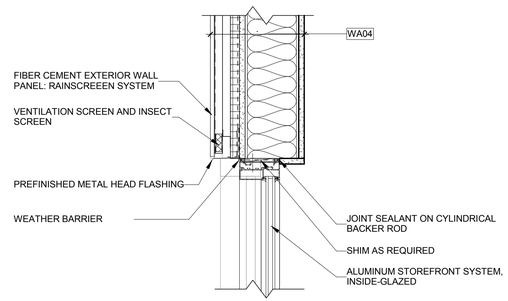

3 SECTION DETAIL - HEAD AT FC

1 1/2" = 1'-0"

REFERENCES – BENCHMARKS

DATE	REVISIONS	BY

ARCHITECT'S SEAL

REGISTERED ARCHITECT — KIMBERLY ANN MEEKS — 12937 — STATE OF TEXAS

02/05/2016

100% CONSTRUCTION DOCUMENTS

SCALE
HOR: SHOWN
VER: SHOWN

DATE 05/04/16
DESIGN BY Designer
DRAWN BY Author
CHKD BY Checker
APPD BY Approver

PROJECT NAME

NORTHGATE TRANSFER CENTER

EL PASO, TEXAS.

CITY OF EL PASO

CAPITAL IMPROVEMENT DEPARTMENT

THE CITY OF EL PASO TEXAS

SHEET TITLE

TRANSFER CENTER SECTION DETAILS

SHEET

A803

RNL
1050 17th STREET
SUITE A200
DENVER, CO 80265
303 295 1717 t
303 292 0845 f

100% CONSTRUCTION DOCUMENTS

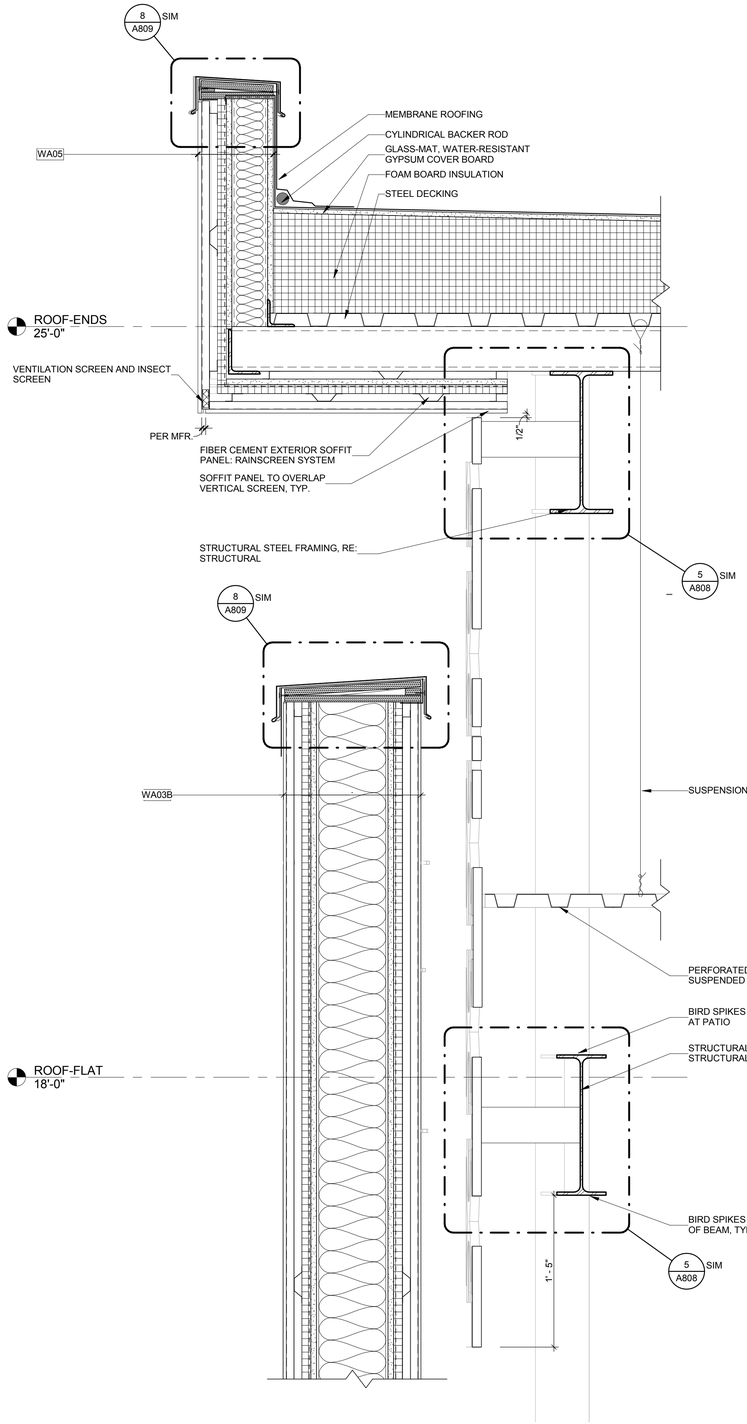

SECTION DETAIL - PARAPET AND SCREEN AT S PATIO

1 1 1/2" = 1'-0"

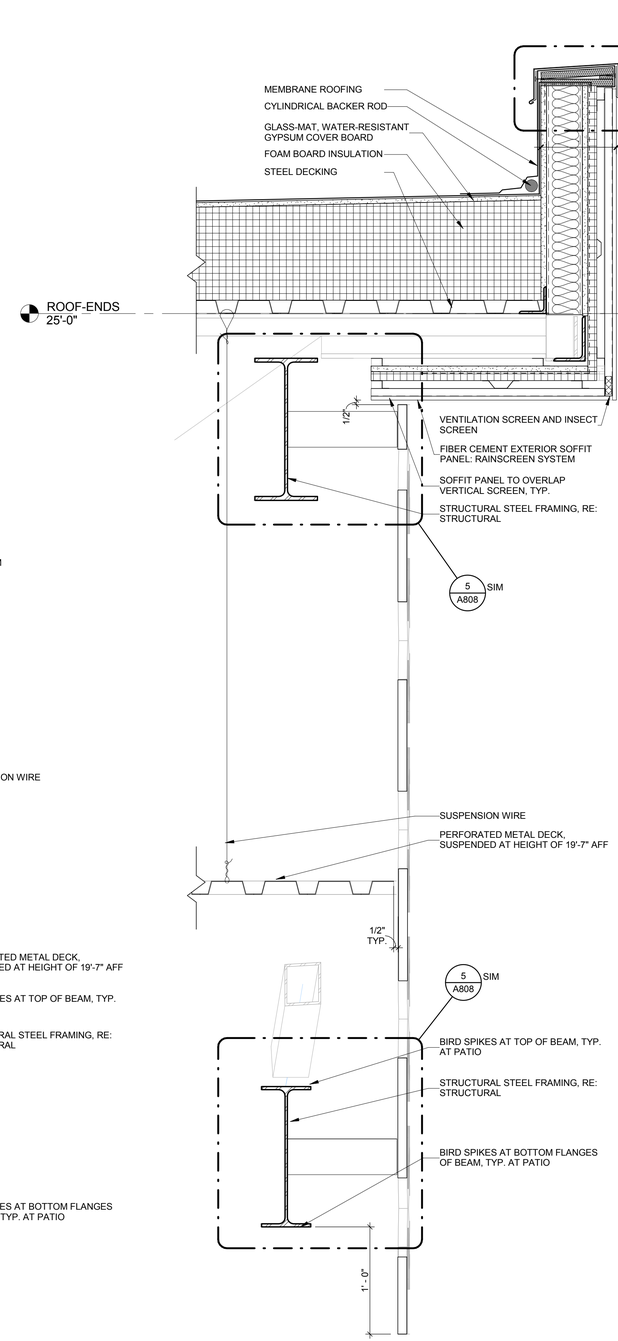

SECTION DETAIL - PARAPET AND SCREEN AT N PATIO

2 1 1/2" = 1'-0"

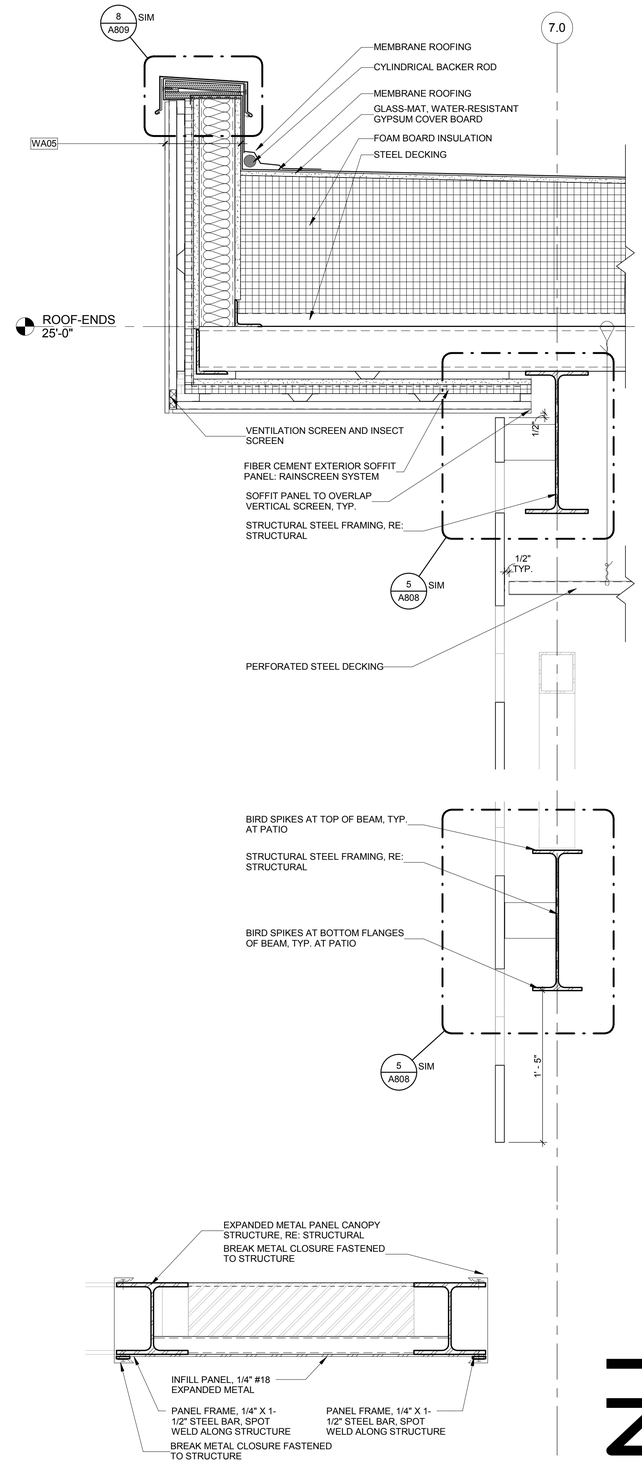

SECTION DETAIL - PARAPET AND SCREEN AT E PATIO

3 1 1/2" = 1'-0"

100% CONSTRUCTION DOCUMENTS

RNL
1050 17th STREET
SUITE A200
DENVER, CO 80265
303 295 1717 t
303 292 0845 f

REFERENCES – BENCHMARKS

BY	REVISIONS	DATE

ARCHITECT'S SEAL

REGISTERED ARCHITECT — ROBERT A. MEYER — 12937 — STATE OF TEXAS

02/05/2016

100% CONSTRUCTION DOCUMENTS

SCALE
HOR: SHOWN
VER: SHOWN

DATE 05/04/16
DESIGN BY Designer
DRAWN BY Author
CHKD BY Checker
APPD BY Approver

PROJECT NAME
NORTHGATE TRANSFER CENTER
EL PASO, TEXAS.

CITY OF EL PASO
CAPITAL IMPROVEMENT DEPARTMENT

SHEET TITLE
TRANSFER CENTER SECTION DETAILS

SHEET
A804

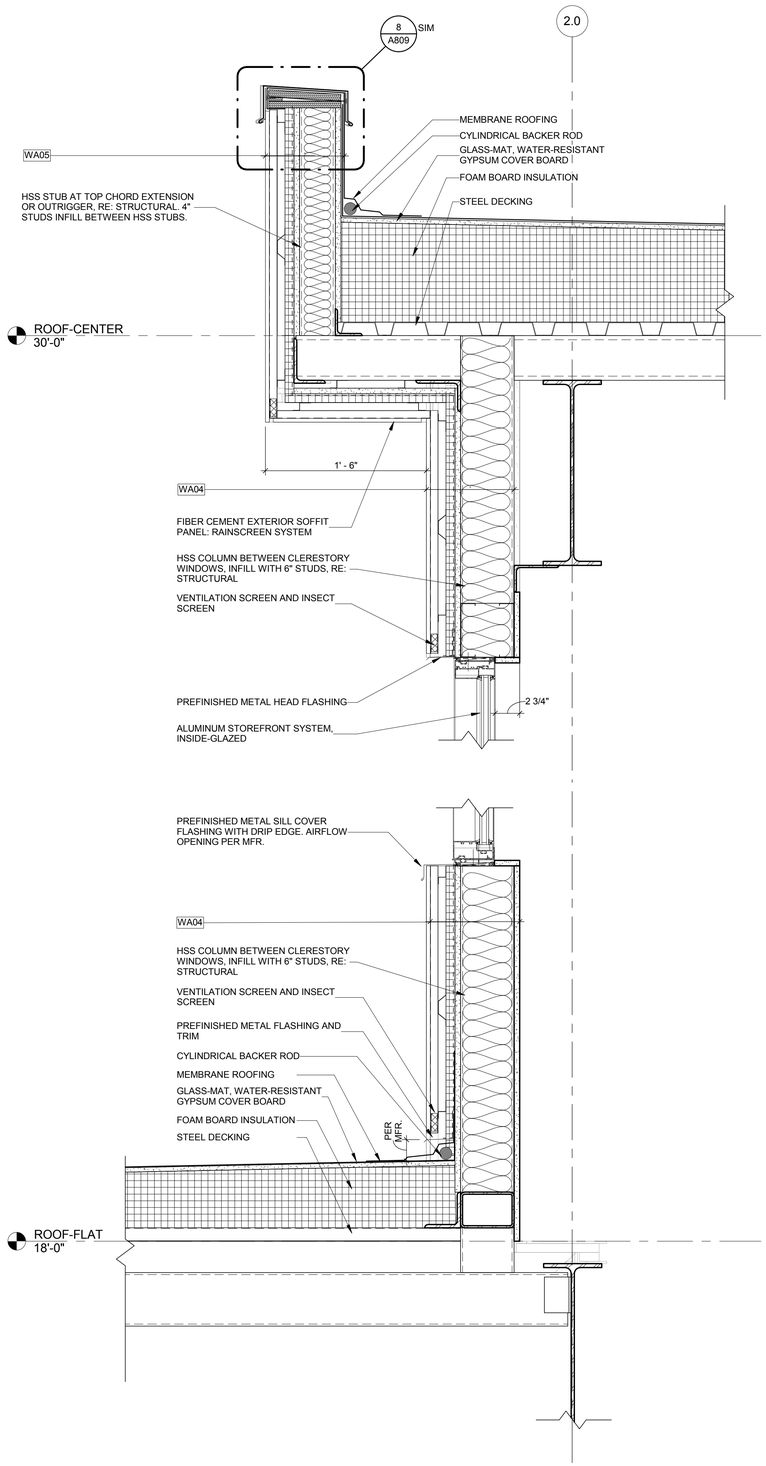

1 WALL SECTION - CLERESTORY AND HIGH ROOF

1 1/2" = 1'-0"

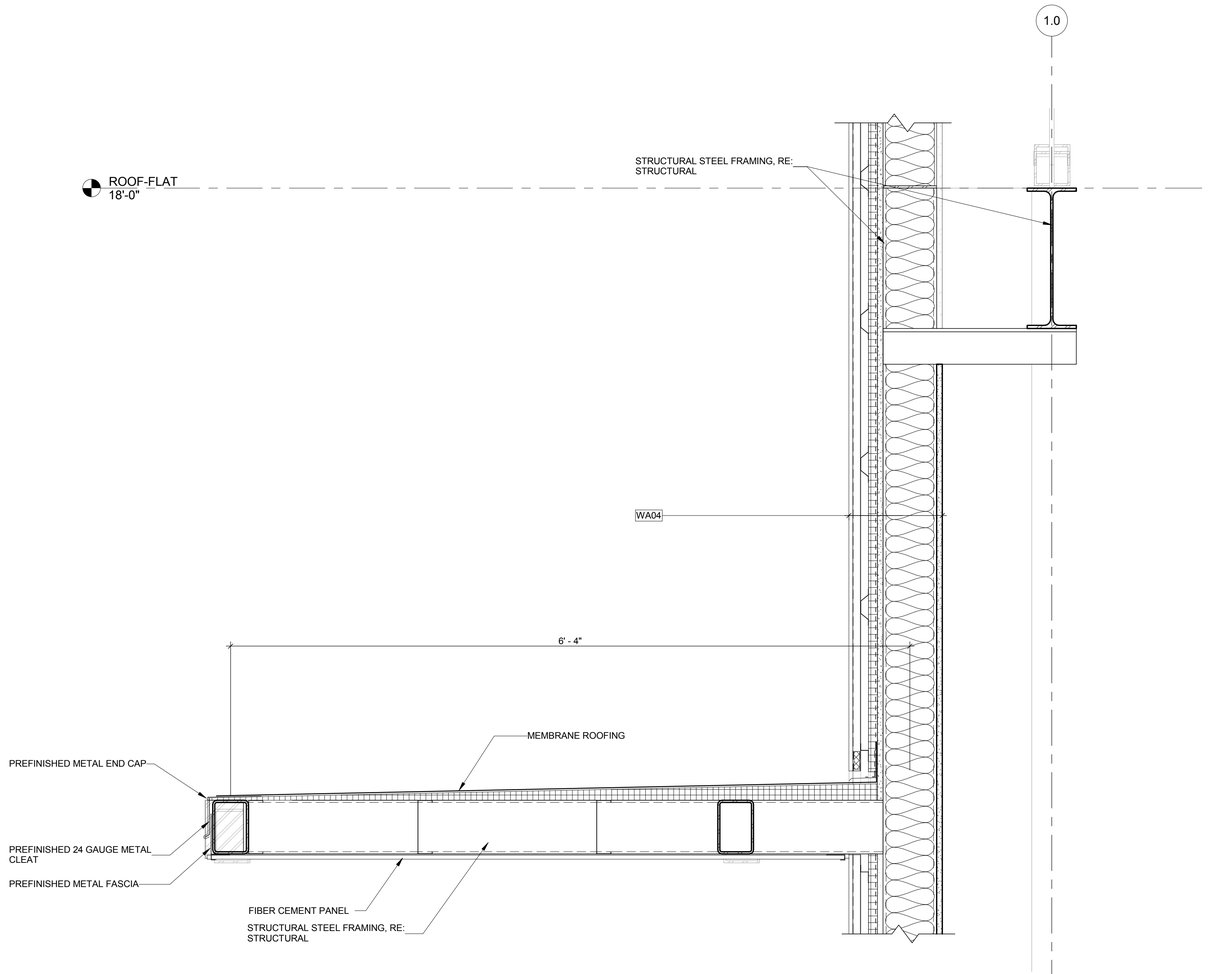

2 SECTION DETAIL - CANOPY AT RESTROOMS

1 1/2" = 1'-0"

100% CONSTRUCTION DOCUMENTS

REFERENCES – BENCHMARKS

BY	REVISIONS	DATE

ARCHITECT'S SEAL

REGISTERED ARCHITECT — KIRK M. KENNEDY — 12937 — STATE OF TEXAS

02/05/2016

100% CONSTRUCTION DOCUMENTS

SCALE
HOR: SHOWN
VER: SHOWN

DATE 05/4/16
DESIGN BY Designer
DRAWN BY Author
CHKD. BY Checker
APPD. BY Approver

PROJECT NAME

NORTHGATE TRANSFER CENTER

EL PASO, TEXAS.

CITY OF EL PASO

CAPITAL IMPROVEMENT DEPARTMENT

THE CITY OF EL PASO TEXAS

SHEET TITLE

TRANSFER CENTER SECTION DETAILS

SHEET

A805

RNL
1050 17th STREET
SUITE A200
DENVER, CO 80265
303 295 1717 t
303 292 0845 f

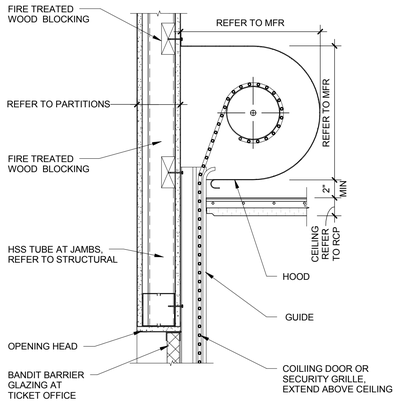

9 OHC DOOR/GRILLE HEAD

1 1/2" = 1'-0"

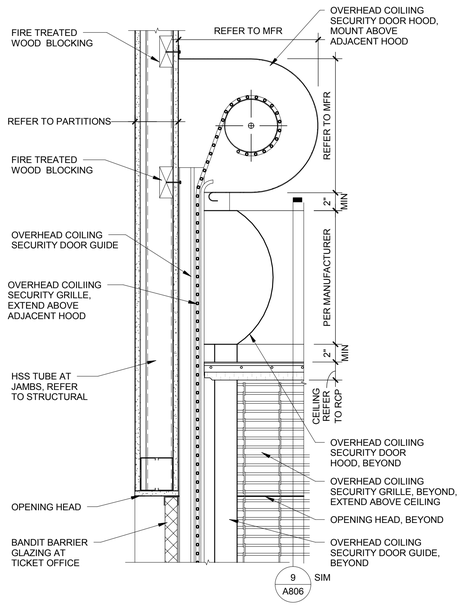

10 OHC GRILLE HEAD - EXTENDED

1 1/2" = 1'-0"

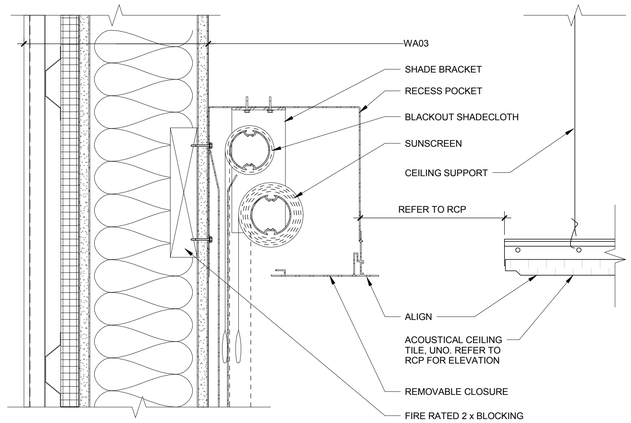

8 CEILING - DUAL SHADE

3" = 1'-0"

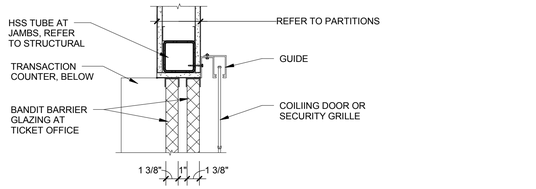

7 OHC SECURITY GRILLE JAMB

1 1/2" = 1'-0"

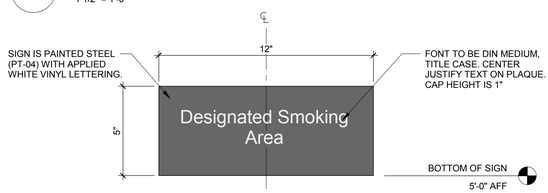

4 TYPE 5 - SMOKING AREA WALL SIGN

3" = 1'-0"

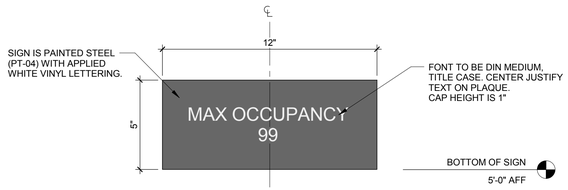

5 TYPE 5 - OCCUPANCY WALL SIGN

3" = 1'-0"

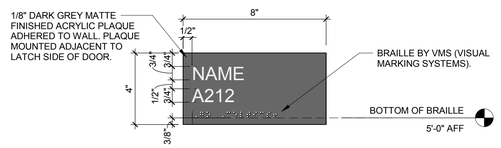

6 TYPE 1 - TYPICAL OFFICE WALL SIGN

3" = 1'-0"

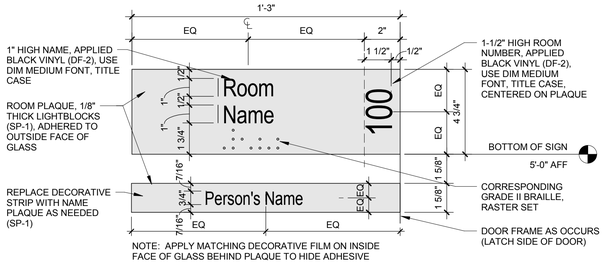

1 TYPE 4 - GLASS MOUNTED SIGN

3" = 1'-0"

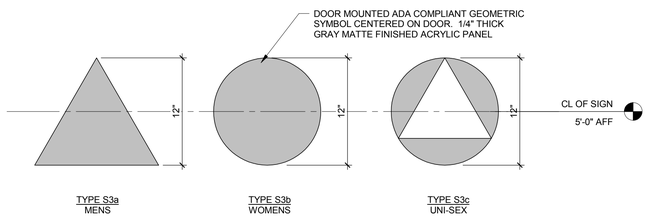

2 TYPE 3 - TYPICAL SANITARY ROOM DOOR SIGN

1 1/2" = 1'-0"

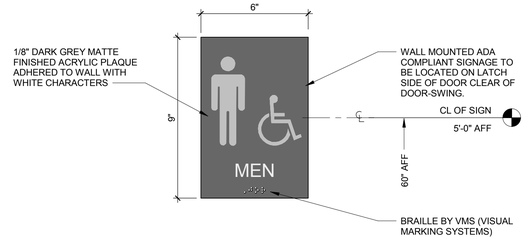

3 TYPE 2 - TYPICAL SANITARY ROOM WALL SIGN

3" = 1'-0"

100% CONSTRUCTION DOCUMENTS

RNL
1050 17th STREET
SUITE A200
DENVER, CO 80265
303 295 1717 t
303 292 0845 f

REFERENCES – BENCHMARKS

BY	REVISIONS	DATE

ARCHITECT'S SEAL

REGISTERED ARCHITECT MICHAEL A. MEYER 12937 STATE OF TEXAS

02/05/2016

100% CONSTRUCTION DOCUMENTS

SCALE
HOR: SHOWN
VER: SHOWN

DATE 05/4/16
DESIGN BY Designer
DRAWN BY Author
CHKD BY Checker
APPD BY Approver

PROJECT NAME

NORTHGATE TRANSFER CENTER

EL PASO, TEXAS.

CITY OF EL PASO
CAPITAL IMPROVEMENT DEPARTMENT

SHEET TITLE

TRANSFER CENTER DETAILS

SHEET
A806

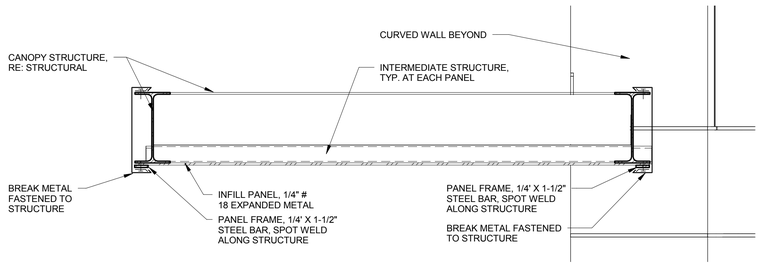

9 SECTION DETAIL AT SE CANOPY - OPEN PATIO

1 1/2" = 1'-0"

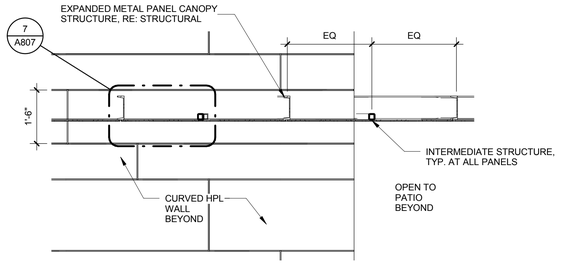

10 ELEV. & SECTION DETAIL - PATIO CANOPY

1/2" = 1'-0"

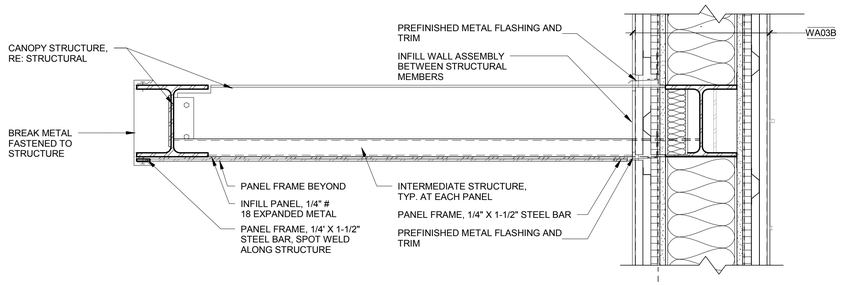

6 SECTION DETAIL AT SE CANOPY - WALL ATTACHMENT

1 1/2" = 1'-0"

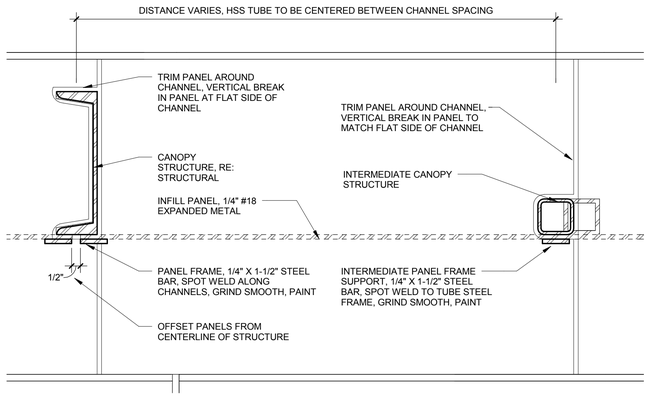

7 SECTION DETAIL - PATIO CANOPY

3" = 1'-0"

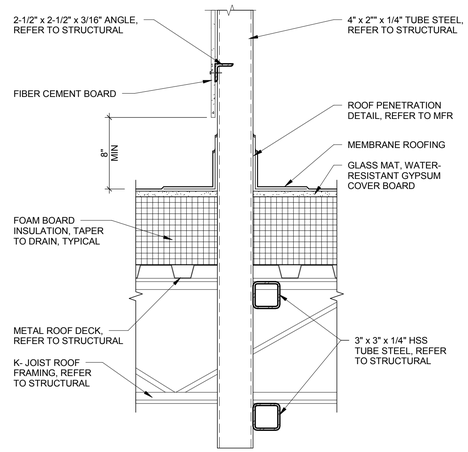

11 FCB ROOF EQPM SCREEN SECT

1 1/2" = 1'-0"

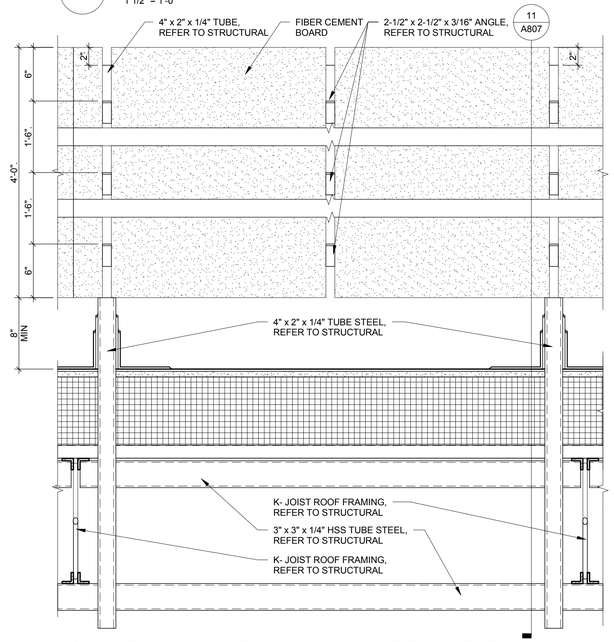

8 FCB ROOF EQPM SCREEN - ELEV

1 1/2" = 1'-0"

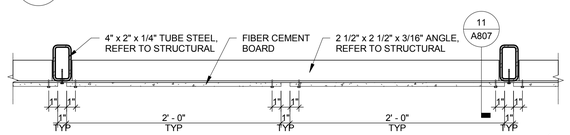

5 FCB ROOF EQPM SCREEN - PLAN

1 1/2" = 1'-0"

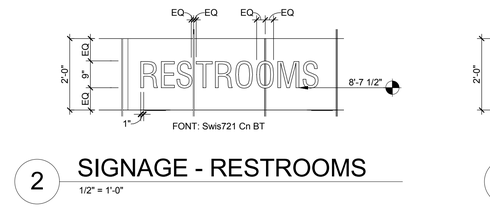

2 SIGNAGE - RESTROOMS

1/2" = 1'-0"

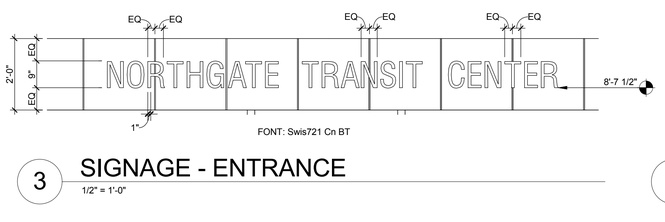

3 SIGNAGE - ENTRANCE

1/2" = 1'-0"

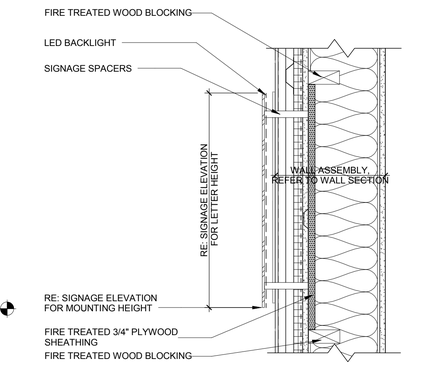

4 SECTION DETAIL - SIGNAGE

1 1/2" = 1'-0"

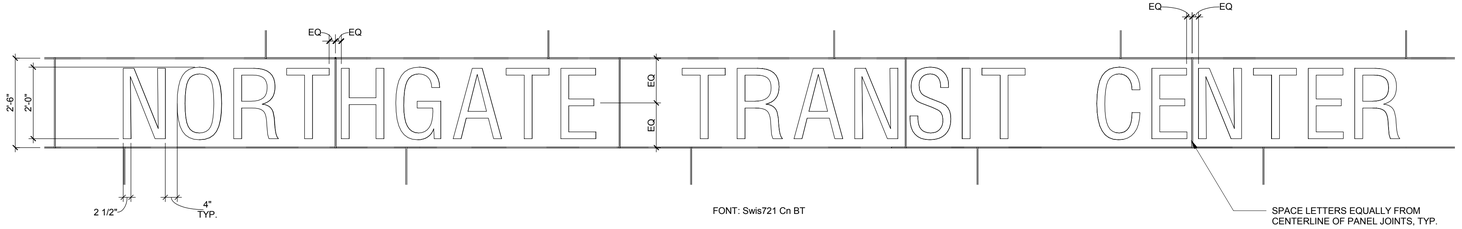

1 SIGNAGE - SOUTH FACADE

1/2" = 1'-0"

100% CONSTRUCTION DOCUMENTS

RNL
1050 17th STREET
SUITE A200
DENVER, CO 80265
303 295 1717 t
303 292 0845 f

REFERENCES – BENCHMARKS

DATE	REVISIONS	BY

ARCHITECT'S SEAL

REGISTERED ARCHITECT — KIMBERLY A. HOWARD — 12937 — STATE OF TEXAS

02/05/2016

100% CONSTRUCTION DOCUMENTS

SCALE
HOR: SHOWN
VER: SHOWN

DATE	05/04/16
DESIGN BY	Designer
DRAWN BY	Author
CHKD BY	Checker
APPD BY	Approver

PROJECT NAME

NORTHGATE TRANSFER CENTER

EL PASO, TEXAS.

CITY OF EL PASO

CAPITAL IMPROVEMENT DEPARTMENT

SHEET TITLE

TRANSFER CENTER DETAILS

SHEET

A807

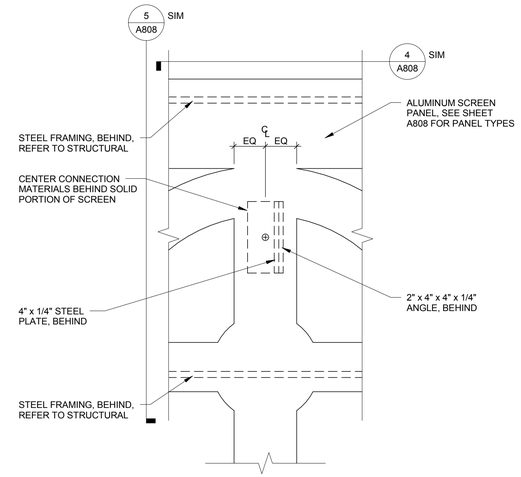

6 ALUMINUM SCREEN CONNECTION - ELEV

3" = 1'-0"

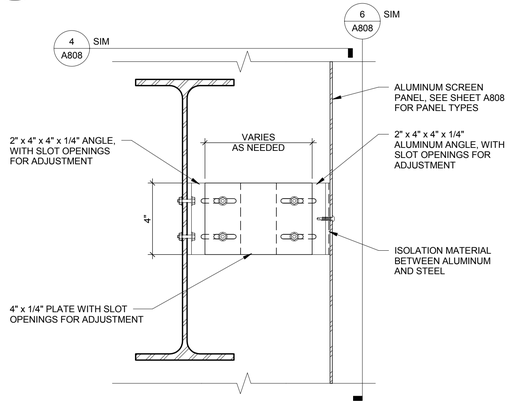

5 ALUMINUM SCREEN CONNECTION - SECT

3" = 1'-0"

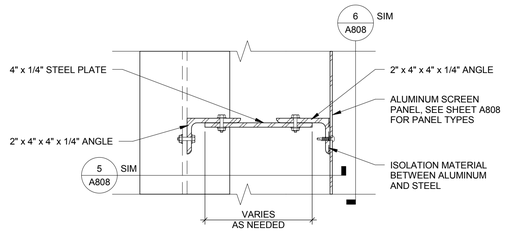

4 ALUMINUM SCREEN CONNECTION - PLAN

3" = 1'-0"

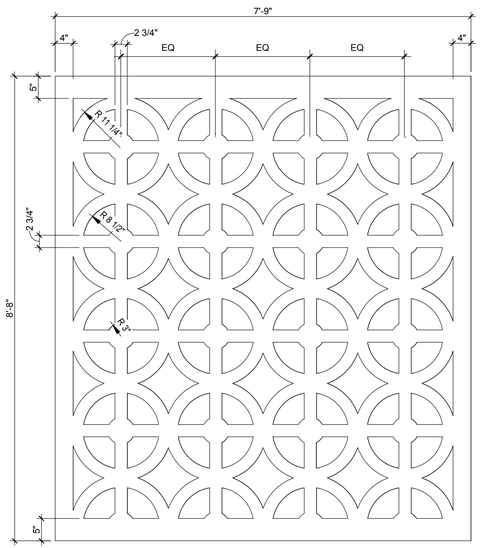

1 SCREEN TYPE A

3/4" = 1'-0"

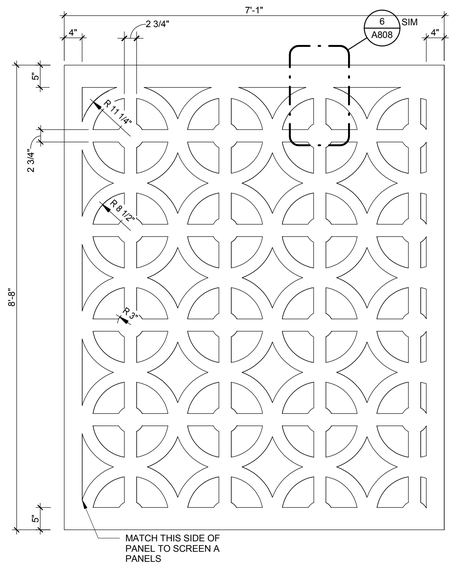

2 SCREEN TYPE B

3/4" = 1'-0"

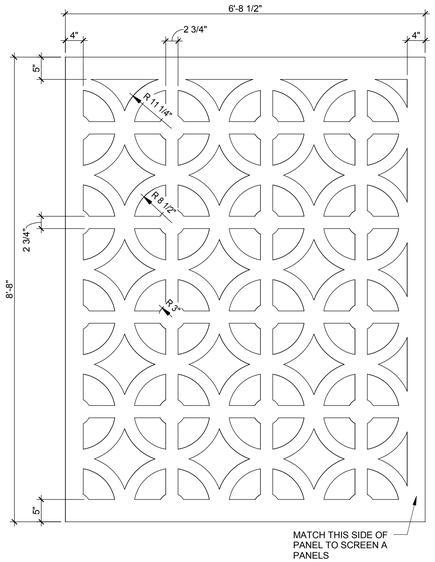

3 SCREEN TYPE C

3/4" = 1'-0"

100% CONSTRUCTION DOCUMENTS

RNL
1050 17th STREET
SUITE A200
DENVER, CO 80265
303 295 1717 t
303 292 0845 f

REFERENCES — BENCHMARKS

REVISIONS	DATE	BY

ARCHITECT'S SEAL

REGISTERED ARCHITECT — MICHAEL W. WOLFE — 12937 — STATE OF TEXAS

02/05/2016

100% CONSTRUCTION DOCUMENTS

SCALE
HOR: SHOWN
VER: SHOWN

DATE: 05/04/16
DESIGN BY: Designer
DRAWN BY: Author
CHKD. BY: Checker
APPD. BY: Approver

PROJECT NAME

NORTHGATE TRANSFER CENTER

EL PASO, TEXAS.

CITY OF EL PASO

CAPITAL IMPROVEMENT DEPARTMENT

THE CITY OF EL PASO TEXAS

SHEET TITLE

TRANSFER CENTER DETAILS

SHEET

A808

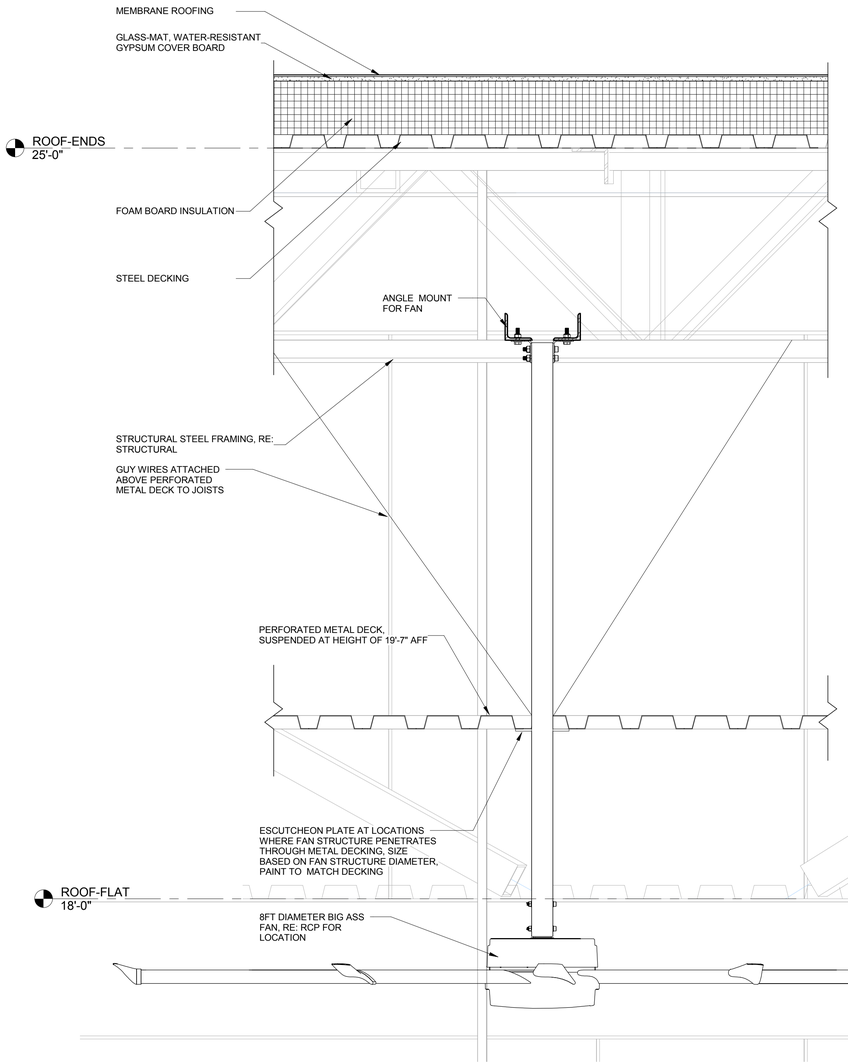

4 SECTION DETAIL - FAN ATTACHMENT
1 1/2" = 1'-0"

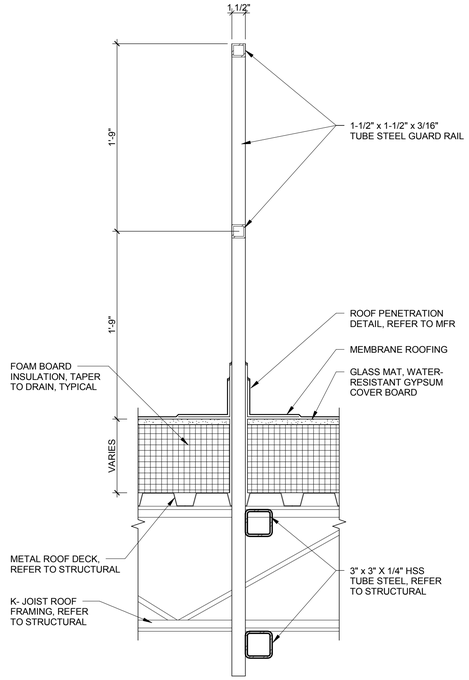

6 GUARDRAIL AT ROOF
1 1/2" = 1'-0"

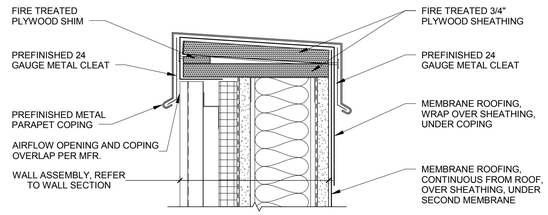

8 PARAPET CAP DETAIL
3" = 1'-0"

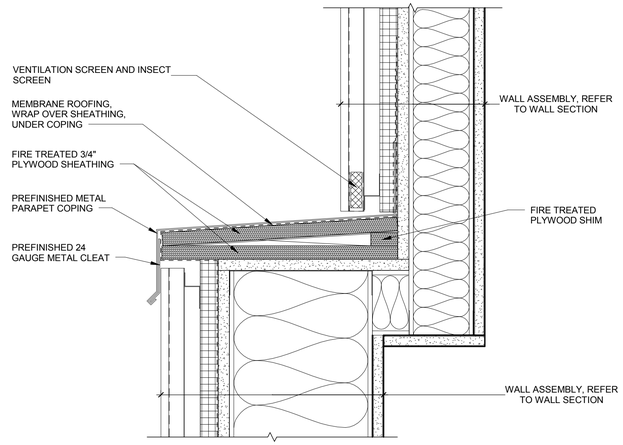

7 LEDGE DETAIL
3" = 1'-0"

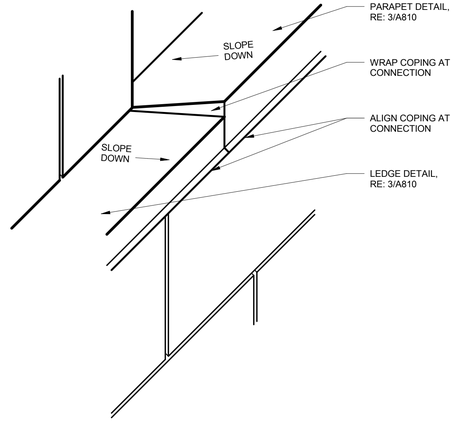

5 COPING CONNECTION DETAIL
1 1/2" = 1'-0"

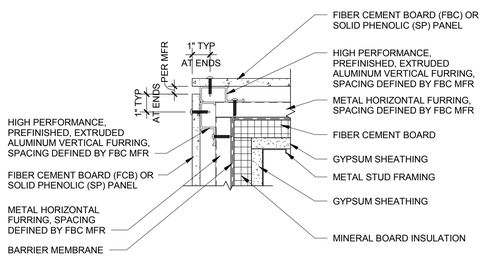

1 FCB/SP OUTSIDE CORNER - PLAN
3" = 1'-0"

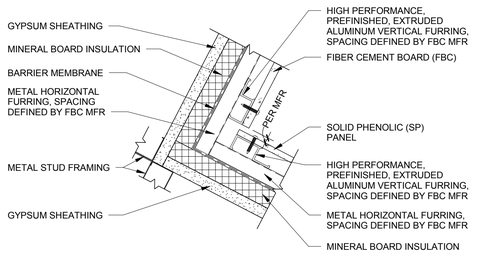

2 FCB/SP INSIDE CORNER - PLAN
3" = 1'-0"

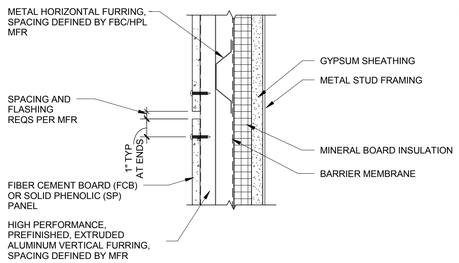

3 FCB/SP TYP. HORIZONTAL JOINT
3" = 1'-0"

100% CONSTRUCTION DOCUMENTS

RNL
1050 17th STREET
SUITE A200
DENVER, CO 80265
303 295 1717 t
303 292 0845 f

REFERENCES – BENCHMARKS

DATE	REVISIONS	BY

ARCHITECT'S SEAL

REGISTERED ARCHITECT — MICHAEL ANTHONY MESTRE — 12937 — STATE OF TEXAS

02/05/2016

100% CONSTRUCTION DOCUMENTS

SCALE
HOR: SHOWN
VER: SHOWN

DATE: 05/04/16
DESIGN BY: Designer
DRAWN BY: Author
CHKD BY: Checker
APPD BY: Approver

PROJECT NAME
NORTHGATE TRANSFER CENTER
EL PASO, TEXAS.

CITY OF EL PASO
CAPITAL IMPROVEMENT DEPARTMENT

SHEET TITLE
TRANSFER CENTER DETAILS

SHEET
A809

DEDUCTIVE ALTERNATE 01	
1	CLOCK TOWER, CLOCK, LIGHTS, AND DETAILS RELATED TO THESE ITEMS PART OF DEDUCTIVE ALTERNATE 01

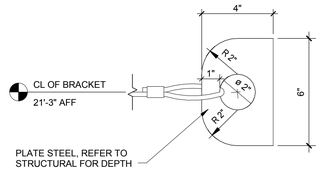

8 CABLE BRACKET
3" = 1'-0"

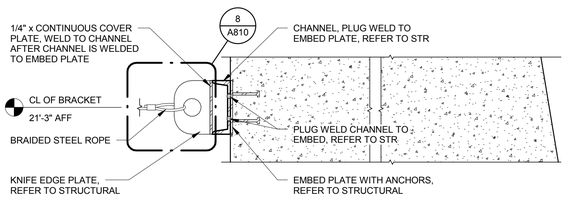

SECTION
NOTE: GRIND ALL EXPOSED WELDS FLUSH AND SMOOTH, PAINT

7 LIGHT CABLE BRACKET AT CONCRETE
1 1/2" = 1'-0"

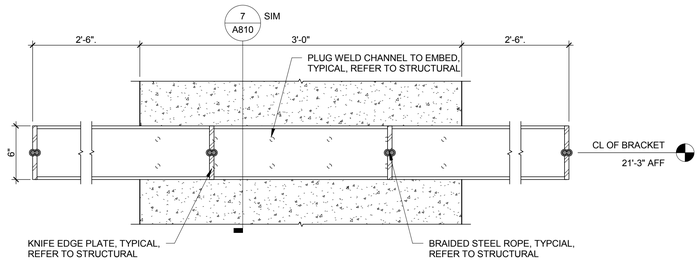

ELEVATION
NOTE: GRIND ALL EXPOSED WELDS FLUSH AND SMOOTH, PAINT

4 LIGHT CABLE BRACKET AT COLUMN - ELEVATION
1 1/2" = 1'-0"

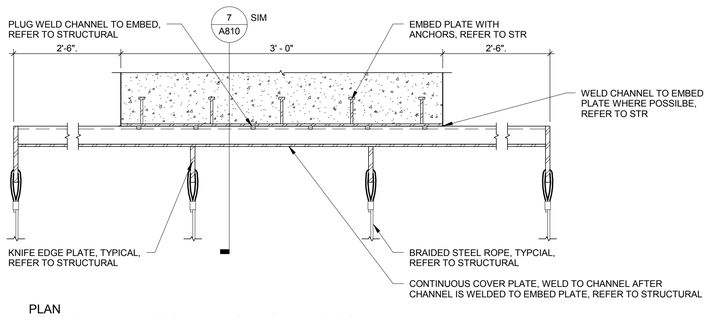

PLAN
NOTE: GRIND ALL EXPOSED WELDS FLUSH AND SMOOTH, PAINT

1 LIGHT CABLE BRACKET AT COLUMN - PLAN
1 1/2" = 1'-0"

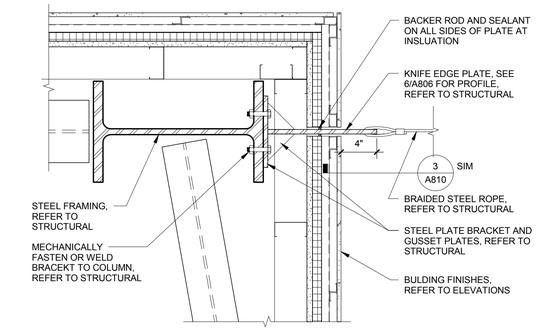

9 CABLE PLATE AT WALL - NW
1 1/2" = 1'-0"

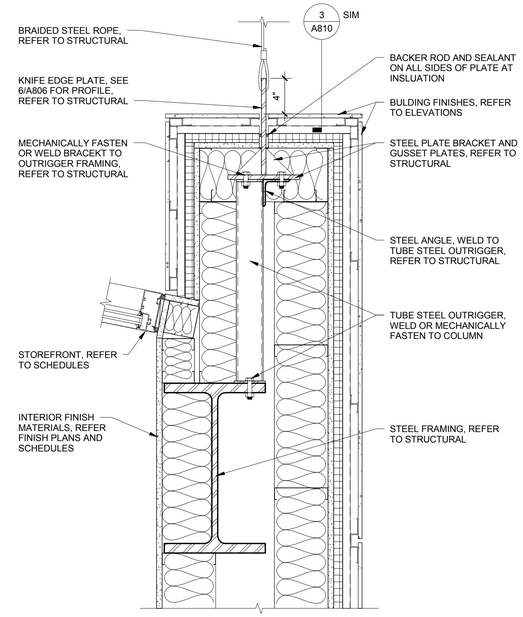

5 CABLE PLATE AT WALL - MIDDLE
1 1/2" = 1'-0"

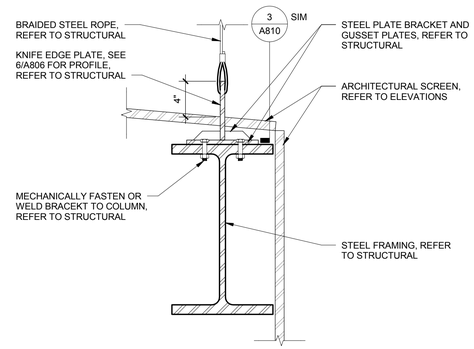

2 CABLE PLATE AT WALL - SE
1 1/2" = 1'-0"

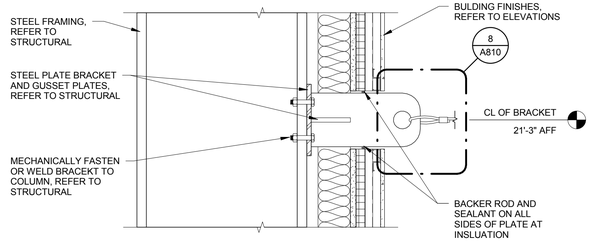

3 LIGHT CABLE BRACKET AT HPL/FCB
1 1/2" = 1'-0"

RNL
1050 17th STREET
SUITE A200
DENVER, CO 80265
303 295 1717 t
303 292 0845 f

100% CONSTRUCTION DOCUMENTS

REFERENCES – BENCHMARKS

REVISIONS

DATE	BY

ARCHITECTS SEAL

REGISTERED ARCHITECT — KIMBERLY ANN MEEK — 12937 — STATE OF TEXAS

02/05/2016

100% CONSTRUCTION DOCUMENTS

SCALE
HOR: 3in=0in
VER: 3in=0in

DATE: 05/4/16
DESIGN BY: Designer
DRAWN BY: Author
CHKD BY: Checker
APPD BY: Approver

PROJECT NAME

NORTHGATE TRANSFER CENTER

EL PASO, TEXAS.

CITY OF EL PASO
CAPITAL IMPROVEMENT DEPARTMENT

SHEET TITLE

TRANSFER CENTER DETAILS - DEDUCTIVE ALTERNATE 01

SHEET
A810

SHEET NOTES	
06.01	PLASTIC LAMINATE WALL HUNG CABINET, PL-1
06.02	PLASTIC LAMINATE BASE CABINET, PL-1
08.03	OVERHEAD SECURITY GRILLE
09.02	ALUMINUM TRIM TOP ANGLE
10.01	STAINLESS STEEL FRAMED MIRROR, SIZE AS SHOWN
10.02	TOILET PARTITION
10.03	SURFACE-MOUNTED HAND DRYER
10.04	SURFACE-MOUNTED SOAP DISPENSER
10.06	TOILET TISSUE DISPENSER
10.07	SURFACE-MOUNTED SANITARY NAPKIN DISPOSAL UNIT
10.09	GRAB BARS
10.10	RECESSED 18 GALLON TRASH RECEPTACLE
10.11	SURFACE-MOUNTED BABY CHANGING STATION
10.16	RECESSED NAPKIN DISPENSER
10.18	RECESSED FIRE EXTINGUISHER CABINET
12.01	SOLID SURFACE COUNTERTOP WITH INTEGRAL SINK
12.02	SOLID SURFACE COUNTERTOP, SS-1
22.03	FILTERED DRINKING WATER FILLER
22.05	WALL HUNG LAVATORY & SINK
22.06	ADA HEIGHT WALL HUNG WATER CLOSET
22.07	WALL HUNG WATER CLOSET
22.08	ACCESSIBLE WALL HUNG URINAL
26.03	UNDER CABINET LIGHTING, RE: ELEC.

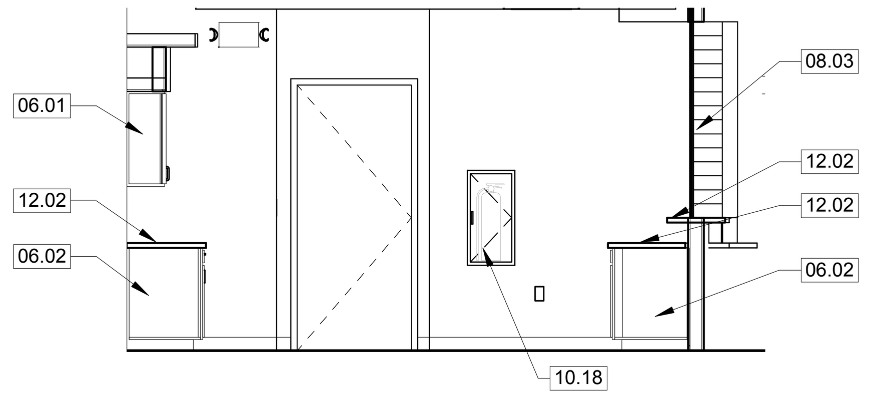

14 WARMING KITCHEN (110) ELEV. A
1/4" = 1'-0"

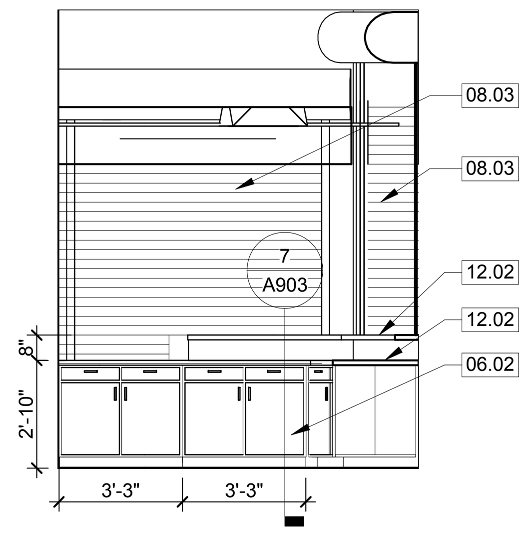

15 WARMING KITCHEN (110) ELEV. B
1/4" = 1'-0"

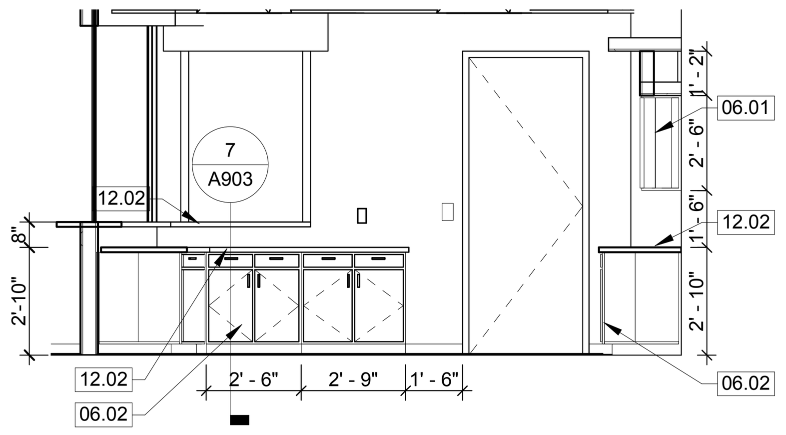

16 WARMING KITCHEN (110) ELEV. C
1/4" = 1'-0"

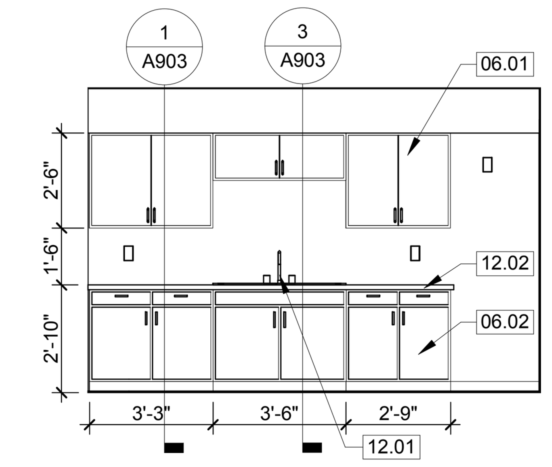

17 WARMING KITCHEN (110) ELEV. D
1/4" = 1'-0"

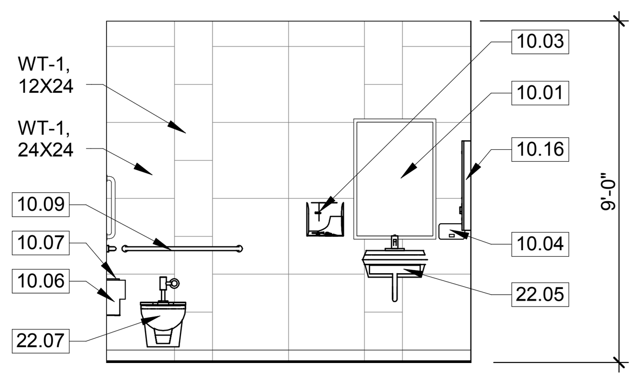

8 FAMILY (115) ELEV.
1/4" = 1'-0"

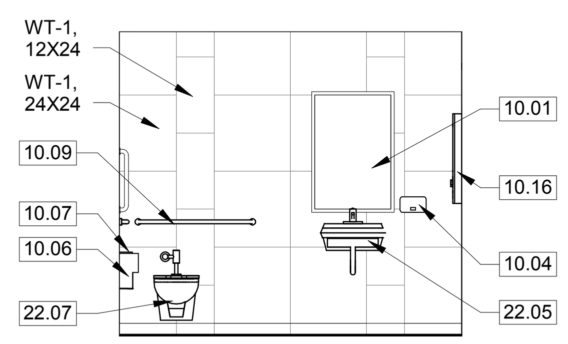

9 WOMEN (119) ELEV.
1/4" = 1'-0"

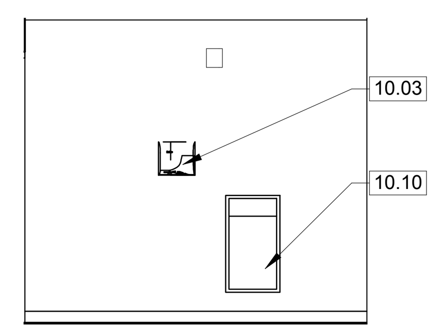

10 WOMEN (119) ELEV.
1/4" = 1'-0"

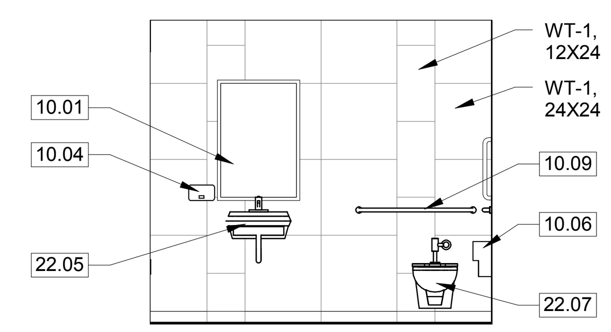

11 MEN (120) ELEV.
1/4" = 1'-0"

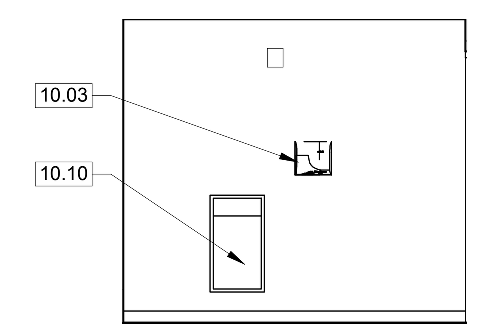

12 MEN (120) ELEV.
1/4" = 1'-0"

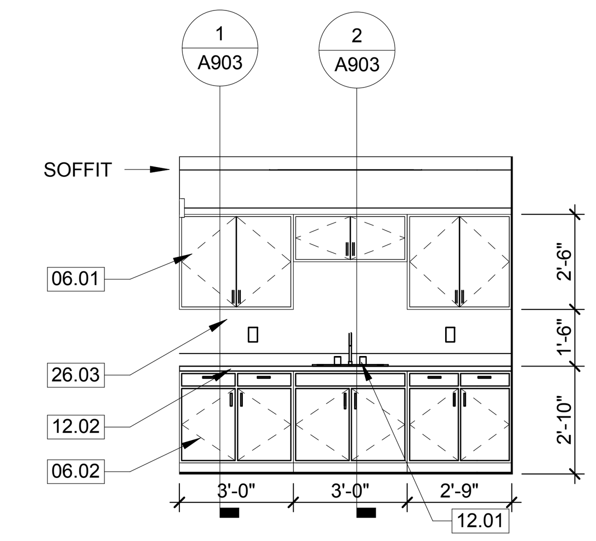

13 OP DAY ROOM (118) ELEV.
1/4" = 1'-0"

4 WOMEN (121 & 123) ELEV. B
1/4" = 1'-0"

5 MEN (122 & 124) ELEV. B
1/4" = 1'-0"

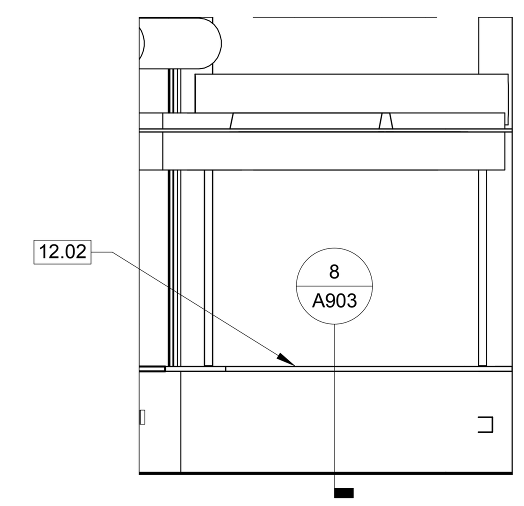

6 TICKET OFFICE (105) ELEV A.
1/4" = 1'-0"

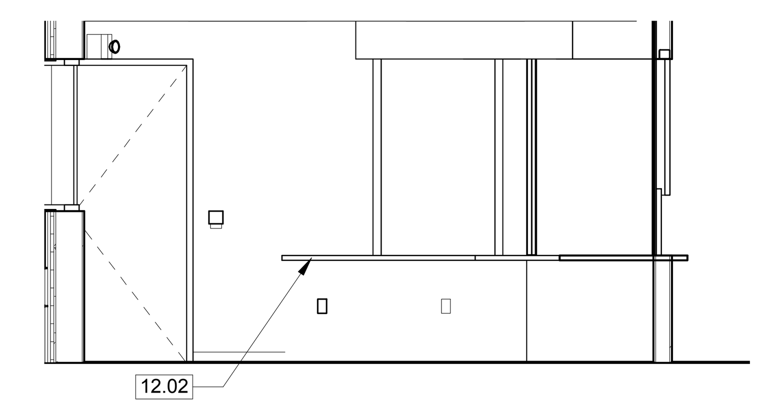

7 TICKET OFFICE (105) ELEV B.
1/4" = 1'-0"

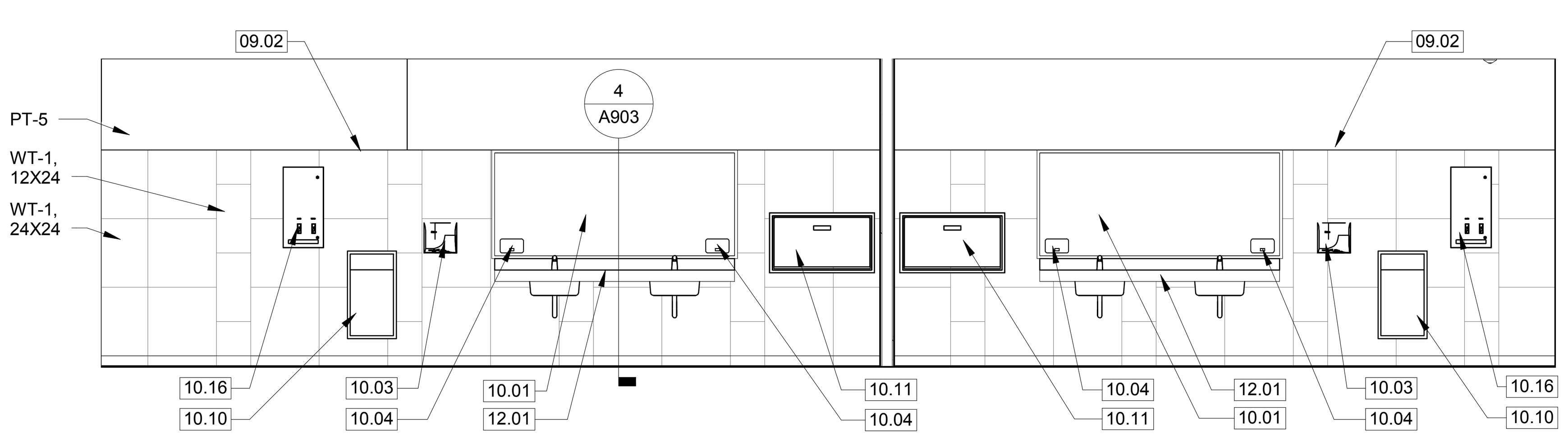

1 WOMEN (121 & 123) ELEV. A
1/4" = 1'-0"

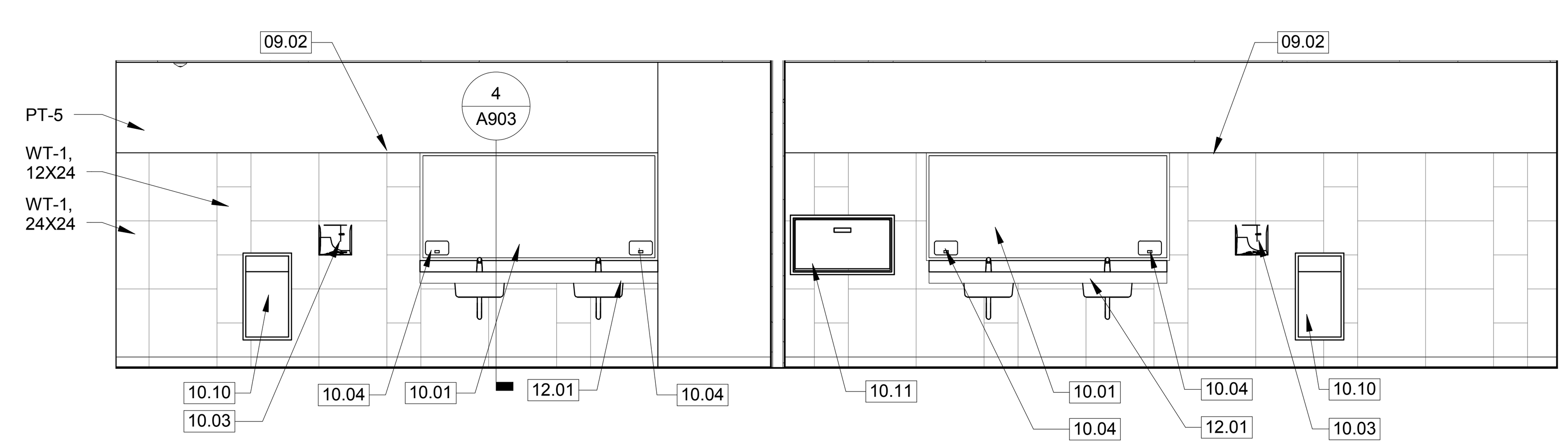

2 MEN (122 & 124) ELEV. A
1/4" = 1'-0"

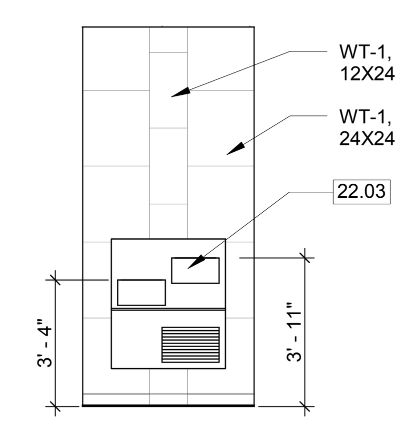

3 DRINKING FOUNTAIN
1/4" = 1'-0"

RNL
1050 17th STREET
SUITE A200
DENVER, CO 80265
303 295 1717 t
303 292 0845 f

100% CONSTRUCTION DOCUMENTS

REFERENCES – BENCHMARKS
REVISIONS
DATE
BY

ARCHITECTS SEAL
02/05/2016

SCALE
HOR: SHOWN
VER: SHOWN
DATE:
DESIGN BY
DRAWN BY
CHKD. BY
APPD. BY

PROJECT NAME
NORTHGATE TRANSFER CENTER
EL PASO, TEXAS.

CITY OF EL PASO
CAPITAL IMPROVEMENT DEPARTMENT

SHEET TITLE
TRANSFER CENTER
INTERIOR
ELEVATIONS

SHEET
A900

SHEET NOTES	
10.01	STAINLESS STEEL FRAMED MIRROR, SIZE AS SHOWN
10.03	SURFACE-MOUNTED HAND DRYER
10.04	SURFACE-MOUNTED SOAP DISPENSER
10.10	RECESSED 18 GALLON TRASH RECEPTACLE
10.11	SURFACE-MOUNTED BABY CHANGING STATION
13.02	52" TV SCREEN, CABLE CONNECTION (OFCI)
13.03	52" BUS SCHEDULE MONITOR (OFCI)
22.05	WALL HUNG LAVATORY & SINK

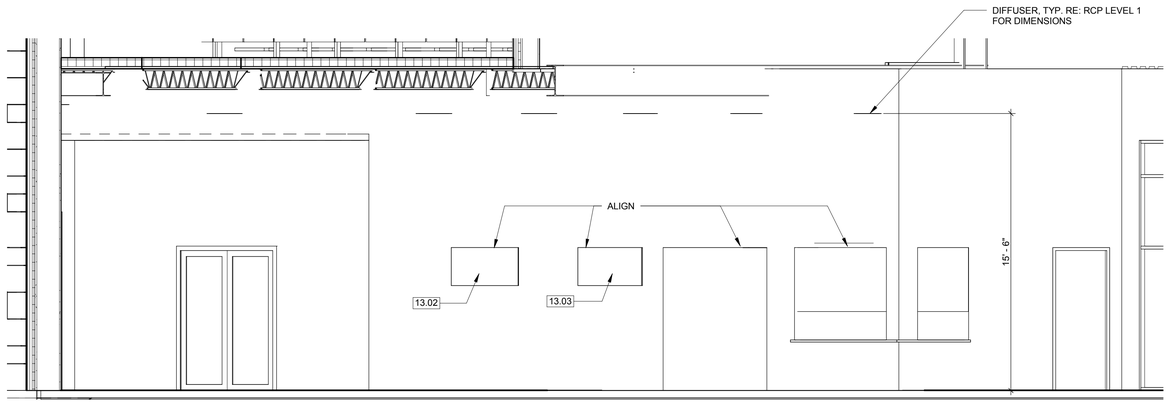

2 LOBBY (101) ELEV. B
1/4" = 1'-0"

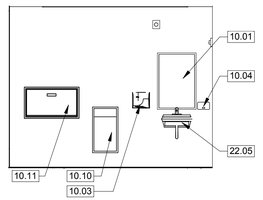

3 NURSING (115) ELEV.
1/4" = 1'-0"

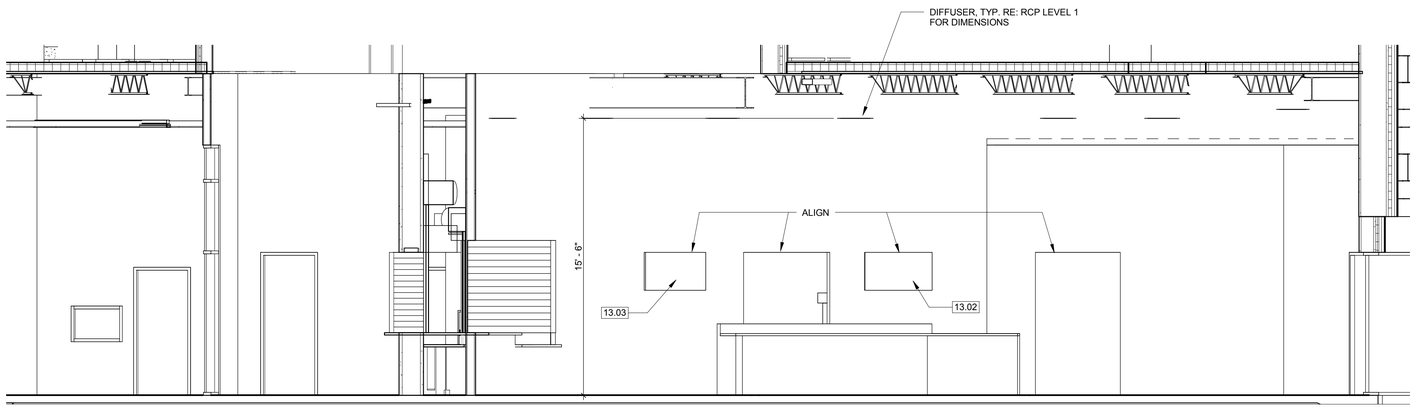

1 LOBBY (101) ELEV. A
1/4" = 1'-0"

RNL
1050 17th STREET
SUITE A200
DENVER, CO 80265
303 295 1717 t
303 292 0845 f

100% CONSTRUCTION DOCUMENTS

REFERENCES – BENCHMARKS

REVISIONS	DATE	BY

ARCHITECT'S SEAL

REGISTERED ARCHITECT
KIRK M. MCDANIEL
12937
STATE OF TEXAS

02/05/2016

100% CONSTRUCTION DOCUMENTS

SCALE
HOR: SHOWN
VER: SHOWN

DATE 5/04/15
DESIGN BY Designer
DRAWN BY Author
CHKD BY Checker
APPD BY Approver

PROJECT NAME
NORTHGATE TRANSFER CENTER
EL PASO, TEXAS.

CITY OF EL PASO
CAPITAL IMPROVEMENT DEPARTMENT

SHEET TITLE
TRANSFER CENTER
INTERIOR
ELEVATIONS

SHEET
A901

3 INTERIOR PERSPECTIVE - LOOKING AT ENTRY

1 INTERIOR PERSPECTIVE - LOBBY VIEW - LOOKING NORTHWEST

2 INTERIOR PERSPECTIVE - LOBBY VIEW - LOOKING SOUTHEAST

100% CONSTRUCTION DOCUMENTS

RNL
1050 17th STREET
SUITE A200
DENVER, CO 80265
303 295 1717 t
303 292 0845 f

REFERENCES – BENCHMARKS

BY	REVISIONS	DATE

ARCHITECTS SEAL

REGISTERED ARCHITECT
KIMBERLY A. MEEK
12937
STATE OF TEXAS

02/05/2016

100% CONSTRUCTION DOCUMENTS

SCALE
HOR: SHOWN
VER: SHOWN

DATE 05/4/16
DESIGN BY Designer
DRAWN BY Author
CHKD BY Checker
APPD BY Approver

PROJECT NAME

NORTHGATE TRANSFER CENTER

EL PASO, TEXAS.

CITY OF EL PASO
CAPITAL IMPROVEMENT DEPARTMENT

THE CITY OF EL PASO TEXAS

SHEET TITLE

TRANSFER CENTER INTERIOR PERSPECTIVES

SHEET
A902

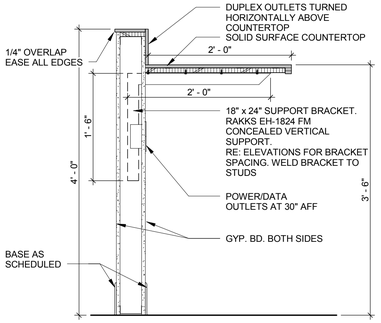

5 OPERATOR WORK STATION

1" = 1'-0"

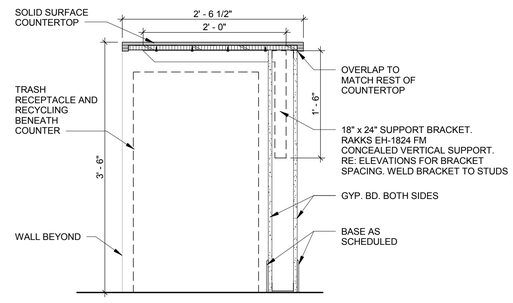

6 TRASH ENCLOSURE

1" = 1'-0"

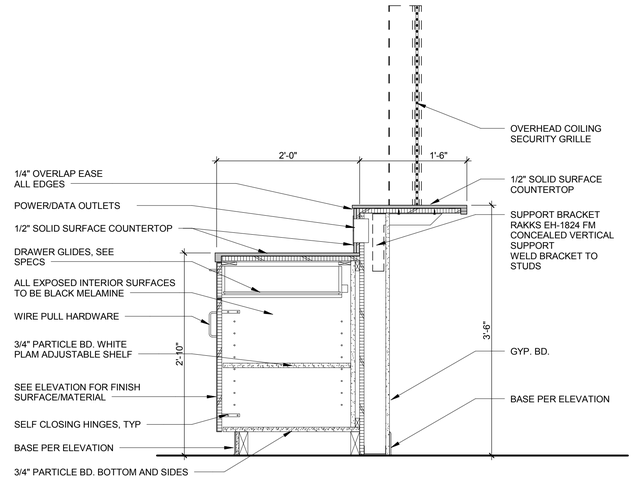

7 WARMING KITCHEN DESK

1" = 1'-0"

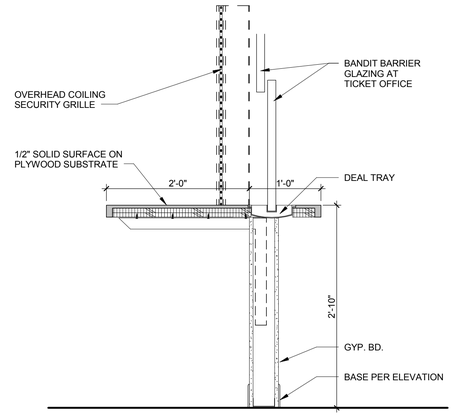

8 TICKET OFFICE COUNTER

1" = 1'-0"

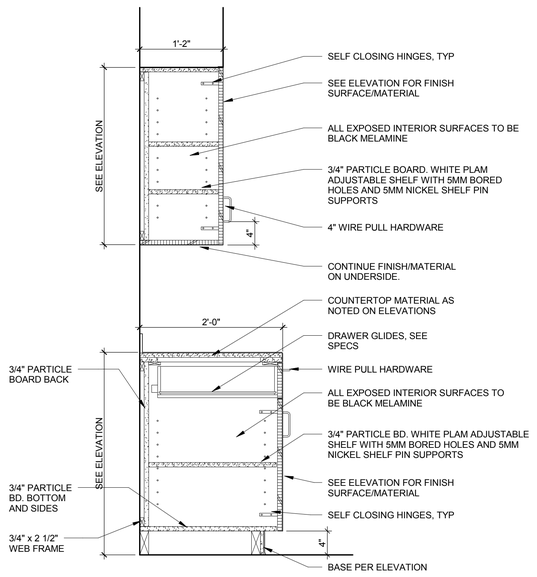

1 BASE & UPPER CABINETS

1" = 1'-0"

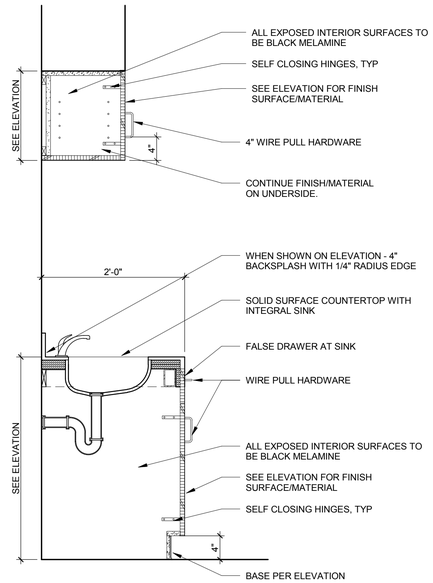

2 BASE WITH SINK & UPPER CABINETS

1" = 1'-0"

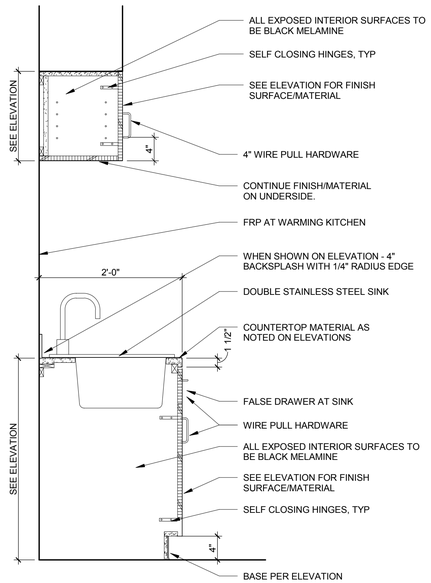

3 BASE WITH SINK & UPPER CABINETS

1" = 1'-0"

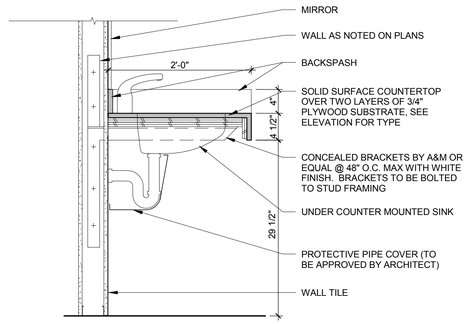

4 RESTROOM SINK

1" = 1'-0"

100% CONSTRUCTION DOCUMENTS

RNL
1050 17th STREET
SUITE A200
DENVER, CO 80265
303 295 1717 t
303 292 0845 f

REFERENCES – BENCHMARKS

DATE	REVISIONS	BY

ARCHITECTS SEAL

REGISTERED ARCHITECT — ROBERT A. MEYER — 12937 — STATE OF TEXAS

02/05/2016

100% CONSTRUCTION DOCUMENTS

SCALE
HOR: SHOWN
VER: SHOWN

DATE 05/04/16
DESIGN BY Designer
DRAWN BY Author
CHKD BY Checker
APPD BY Approver

PROJECT NAME

NORTHGATE TRANSFER CENTER

EL PASO, TEXAS.

CITY OF EL PASO

CAPITAL IMPROVEMENT DEPARTMENT

SHEET TITLE

TRANSFER CENTER MILLWORK DETAILS

SHEET

A903

STRUCTURAL NOTES

DESIGN LOADS:

ROOF DEAD LOADS:	16 PSF
DESIGN LIVE LOADS:	
ROOF	20 PSF
PARKING	40 PSF
STAIRWAYS	100 PSF
MECHANICAL ROOM	150 PSF

WIND LOADING:

BASIC WIND SPEED	90 MPH
BUILDING CATEGORY	II
IMPORTANCE FACTOR	1.0
WIND EXPOSURE	B
INTERNAL PRESSURE COEFF.	±.18

DESIGN WIND PRESSURE PER IBC 2009 ANALYSIS:
WALL = 18 PSF

SEISMIC LOADING:

OCCUPANCY CATEGORY	II
SEISMIC USE GROUP	I
SEISMIC IMPORTANCE FACTOR	1.00
SPECTRAL RESPONSE COEFFICIENTS:	
SDS = 0.369	
SD1 = 0.177	
SITE CLASS	D
SEISMIC DESIGN CATEGORY	C

ANALYSIS PROCEDURE:
EQUIVALENT LATERAL FORCE PROCEDURE FOR SEISMIC DESIGN OF BUILDINGS
BASE SHEAR: 695 KIPS (GARAGE)
20 KIPS (TRANSFER CENTER)

BASIC SEISMIC FORCE RESISTING SYSTEM:
GARAGE: ORDINARY REINFORCED CONCRETE MOMENT RESISTING FRAME R=3.0
TRANSFER CENTER: ORDINARY STEEL MOMENT RESISTING FRAME R=3.5

DESIGN CODES :

INTERNATIONAL BUILDING CODE (IBC) 2009
ASCE 7-05 - MINIMUM DESIGN LOADS FOR BUILDINGS AND OTHER STRUCTURES.
AMERICAN CONCRETE INSTITUTE - BUILDING CODE REQUIREMENTS FOR STRUCTURAL CONCRETE (ACI 318-08).
AMERICAN INSTITUTE OF STEEL CONSTRUCTION - CODE OF STANDARD PRACTICE FOR STEEL BUILDINGS AND BRIDGES.
STEEL JOIST INSTITUE - RECOMMENDED CODE OF PRACTICE FOR STEEL JOISTS AND JOISTS GIRDERS.
STEEL DECK INSTITUTE - DESIGN MANUAL FOR COMPOSITE DECKS, FORM DECKS AND ROOF DECKS. STRUCTURAL WELDING CODE - AWS D1.1

GENERAL NOTES:

1. CONTRACTOR SHALL VERIFY ALL DIMENSIONS, ELEVATIONS AND SITE CONDITIONS PRIOR TO THE COMMENCEMENT OF WORK.
2. CONTRACTOR SHALL COORDINATE AND COMPARE STRUCTURAL DOCUMENTS WITH ARCHITECTURAL, MECHANICAL AND ELECTRICAL DOCUMENTS AS WELL AS THOSE OF ANY ADDITIONAL CONSULTANTS. ANY DISCREPANCIES FOUND IN THE DOCUMENTS AMONG THESE DISCIPLINES SHALL BE REPORTED TO THE ARCHITECT FOR PROPER ADJUSTMENT PRIOR TO THE COMMENCEMENT OR PROGRESSION OF WORK.
3. DETAILS ON THESE DRAWINGS ARE TYPICAL IN NATURE AND APPLICABLE TO SIMILAR PROJECT CONDITIONS WHETHER OR NOT THEY ARE SPECIFICALLY REFERENCED.
4. IN THE EVENT THAT CERTAIN DETAILS OR FEATURES OF CONSTRUCTION ARE NOT FULLY SHOWN WITHIN THESE PROJECT DOCUMENTS AND SPECIFICATIONS, THEN SUCH FEATURES SHALL BE COMPLETED IN THE SAME CHARACTER OF CONSTRUCTION AS SIMILAR FEATURES OR CONDITIONS WHICH ARE DETAILED OR DESCRIBED WITHIN THESE DOCUMENTS.
5. NOT ALL OPENINGS AND PENETRATIONS ARE SHOWN ON THESE DRAWINGS. REFER TO DRAWINGS FROM ALL DISCIPLINES FOR THE COORDINATION OF PENETRATIONS AT FLOOR SLABS, WALLS AND TILT-WALL PANELS.
6. VERIFY THE SIZE AND LOCATION OF ALL MECHANICAL UNITS AND EQUIPMENT RELATED TO THE INTENDED USE OF THE FACILITY.
7. BUILDING STRUCTURE AND STRUCTURAL ELEMENTS SHALL BE TEMPORARILY BRACED DURING CONSTRUCTION AGAINST LATERAL LOADS UNTIL THE PERMANENT LATERAL FORCE RESISTING SYSTEM OR BRACING IS IN PLACE. CONTRACTOR SHALL FIELD VERIFY ALL EXISTING BUILDING CONDITIONS, INCLUDING BUT NOT LIMITED TO DIMENSIONS, CONNECTIONS, INTEGRITY OF MATERIALS AND THEIR SHAPE, SIZE AND QUANTITY. THE CONTRACTOR SHALL NOTIFY THE ARCHITECT AND ENGINEER OF ANY DISCREPANCIES/CONFLICTS PRIOR TO THE COMMENCEMENT OR PROGRESSION OF WORK.
8. THE CONTRACTOR SHALL BE SOLEY RESPONSIBLE FOR ALL EXCAVATION PROCEDURE INCLUDING LAGGING, SHORING AND PROTECTION OF ADJACENT PROPERTY, STRUCTURES, STREETS & UTILITIES.
9. SHOP DRAWINGS ARE AN AID FOR FIELD PLACEMENT AND ERECTION, AND ARE SUPERCEDED BY THE CONSTRUCTION DOCUMENTS. IT IS THE RESPONSIBILITY OF THE CONTRACTOR TO ENSURE THAT ALL WORK IS PERFORMED IN FULL COMPLIANCE WITH THE MOST UP-TO-DATE CONSTRUCTION DOCUMENTS.
10. ALL SHOP DRAWINGS SHALL BE REVIEWED BY THE CONTRACTOR BEFORE SUBMITTING TO THE ARCHITECT/ENGINEER FOR REVIEW; SHOP DRAWINGS SUBMITTED PRIOR REVIEW BY THE CONTRACTOR SHALL BE REJECTED AND RETURNED THE CONTRACTOR. REVIEW OF THE SHOP DRAWINGS BY THE ENGINEER IS FOR GENERAL CONFORMANCE TO THE DESIGN CONCEPT AS INDICATED IN THE CONSTRUCTION DOCUMENTS, AND DOES NOT RELIEVE THE CONTRACTOR FOR FULL COMPLIANCE TO THE CONSTRUCTION DOCUMENTS.

CONCRETE MASONRY NOTES:

1. CONCRETE MASONRY UNITS, EXCEPT FOR THOSE USED AS VENEER, SHALL BE HOLLOW, LOAD-BEARING, TYPE N, CONFORMING TO ASTM C 90.
2. MASONRY DESIGN STENGTH, Fm, SHALL BE 1500 PSI.
3. MORTAR SHALL COMPLY WITH ASTM C270, TYPE S. 28-DAY COMPRESSIVE STRENGTH SHALL BE 1800 PSI.
4. GROUT SHALL COMPLY WITH ASTM C476 AND HAVE A 28-DAY COMPRESSIVE STRENGTH OF 2500 PSI. FILL ALL CELLS CONTAINING REINFORCMENT AND THOSE BELOW FINISHED FLOOR WITH GROUT.
5. GROUT SHALL HAVE FLUIDITY TO ASSURE FILLING AND CONSOLIDATION OF ALL CELLS INTENDED TO BE FILLED. VIBRATE AS REQUIRED. GROUT CELLS TO WITHIN 1 1/2" TOP OF MASONRY UNIT AT LOCATIONS WHERE GROUT PLACEMENT IS STOPPED BUT SUBSEQUENT PLACEMENT WILL OCCUR.
6. REINFORCE CONCRETE MASONRY WALLS PER PLANS IN THESE CONTRACT DOCUMENTS. IN ADDITION PROVIDE 1- #5 VERTICAL AT WALL CORNERS, INTERSECTIONS, ENDS OF WALLS AND ADJACENT TO OPENINGS.
7. VERTICAL AND HORIZONTAL REINFORCEMENT SHALL BE SECURED AND SUPPORTED WITHIN CELLS TO PREVENT DISPLACEMENT DURING GROUT PLACEMENT.
8. PROVIDE 8" BOND BEAMS REINFORCED WITH 2- #5 BARS AT 4'-0" O.C. VERTICALLY. BOND BEAMS SHALL BE DISCONTINUOUS AT WALL CONTROL JOINTS, EXCEPT AT THE ROOF ELEVATION WHERE BOND BEAM SHALL BE CONTINUOUS.
9. REINFORCE WALLS WITH LADDER TYPE, ASTM A-82 #9 GAGE WIRE AT 16" O.C.
10. VERTICAL WALL REINFORCEMENT SHALL BE CONTINUED ABOVE OPENINGS.
11. CMU LINTELS SHALL BEAR ON JAMBS THE SAME WIDTH AS THE DEPTH OF LINTEL U.N.O. REINFORCE EACH CELL W/ 1- #5 VERTICAL AND GROUT SOLID. PROVIDE 2- #5 IN 8" BOND BEAM MIN. AT BOTTOM OF OPENINGS FOR WHICH THE LINTEL SCHEDULE IS NOT APPLICABLE OR A LINTEL IS NOT PROVIDED.

FOUNDATION DESIGN CRITERIA

1. REFER TO GEOTECHNICAL REPORT PROJECT NO. AGCQC15-023 PREPARED BY CQC ENGINEERING AND TESTING, LLC ON XX-XX-2015 FOR SITE PREPARATION AND FOUNDATION RECOMMENDATIONS.
2. FOOTINGS SHALL BE PLACED ON 24" OF PROPERLY COMPACTED SUITABLE BEARING MATERIALS. STRUCTURAL FILL SHALL BE PLACED SUCH THAT ALL FOOTINGS BEAR ON A UNIFORM STRATUM OF LIKE OR SIMILAR SUBGRADE MATERIALS TO MITIGATE ADVERSE EFFECTS FROM DIFFERENTIAL SETTLEMENT.
3. "PROPERLY COMPACTED" BEARING MATERIALS ARE TO PLACED IN 8" LOOSE LIFTS AND COMPACTED TO A MINIMUM OF 95% OF MAXIMUM DRY DENSITY IN ACCORDANCE TO ASTM D 1557.
4. FOUNDATION SYSTEM IS COMPRISED OF CONTINUOUS AND SPREAD FOOTINGS AS WELL AS DRILLED SHAFT PIERS.
5. FOOTING EXCAVATIONS SHALL BE PROTECTED FROM MOISTURE INFILTRATION AND FOOT TRAFFIC WHILE AWAITING PLACEMENT OF CONCRETE.
6. FOOTINGS SHALL BE PROTECTED FROM FREEZING SHOULD THE FOUNDATION BE EXPOSED TO FREEZING TEMPERATURES DURING CONSTRUCTION.

DRILLED PIER NOTES:

1. FOUNDATION EXCAVATIONS AND SHAFT DRILLLING SHALL BE OBSERVED BY THE GEOTECHNICAL ENGINEER PRIOR TO PLACEMENT OF STEEL AND CONCRETE TO ASSESS THE ADEQUACY OF THE FOUNDATION MATERIALS TO SUPPORT THE DESIGN LOADS.
2. DRILLED SHAFT PIER DESIGN WAS BASE DON CHART PROVIDED BY CQC
3. PIERS CONSTRUCTION TOLERANCES :
SHAFT OUT OF PLUMBNESS : 2% OF SHAFT LENGTH'
SHAFT DIAMETER : +2", -0"
TOP OF PIER ELEVATION : +1",-3"
CENTER LINE MAXIMUM LATERAL DEVIATION : 2"
VERTICAL PLACEMENT OF DOWELS AT PIERS TOPS : +2",-2"
LATERAL PLACEMENT OF DOWELS AT PIERS TOPS : +1",-1"
VERTICAL PLACEMENT OF ANCHOR BOLTS AT PIERS TOPS : +1",-0"
LATERAL PLACEMENT OF ANCHOR BOLTS AT PIERS TOPS : +1/4",-1/4"
4. CONCRETE FOR DRILLED SHAFT PIERS SHALL BE PLACED SHAFTS FREE OF DEBRIS OR LOOSE MATERIALS.
5. TEMPORARY CASINGS MAY BE USED TO STABILIZE PIER SHAFTS OR TO PREVENT WATER SEEPAGE INTO THE SHAFT.

CONCRETE NOTES:

1. CONCRETE SHALL BE READY MIXED ACCORDING TO THE REQURIEMENTS OF ASTM C94 AND THE CURRENT EDITION OF ACI.
2. CEMENT SHALL BE PORTLAND CEMENT TYPE I OR II IN COMPLIANCE WITH ASTM C150. FLY ASH SHALL NOT COMPRISE MORE THAN 20% OF CEMENTITOUS MATERIALS AND CONFORM TO ASTM C618 TYPE C OR F.
3. AGGREGATES SHALL CONFORM TO ASTM C33 FOR NORMAL WEIGHT CONCRETE.
4. MAXIMUM WATER CEMENT (W/C) RATIO FOR CONCRETE SHALL BE .45
5. CONCRETE MIX DESIGNS SHALL BE DESIGNED BY A REGISTERED ENGINEER AND CONTAIN ALL TYPES, AMOUNTS AND PROPORTIONS OF MATERIALS INCLUDING ANY ADMIXTURES. HISTORICAL AND STATISTICAL DATA SHALL SUBSTANTIATE THE STRENGTH OF THE CONCRETE IN ACCORDANCE WITH ACI 318 REQUIREMENTS.
6. ALL CONCRETE SHALL BE CONSOLIDATED WITH MECHANICAL VIBRATORS IN COMPLIANCE WITH ALL RECOMMENDED PLACEMENT PRACTICES OF ACI 309.
7. CONCRETE CONTROL JOINTS SHALL BE INSTALLED AT DESIGNATED LOCATIONS ON THE FOUNDATION PLAN MARKED "C.J.". IT SI RECOMMENDED THAT THESE JOINTS BE FILLED FOLLOWING SLAB SHRINKAGE AT 28 DAYS IF THE SLAB SHALL BE EXPOSED TO WHEEL LOADS FROM MOVEABLE EQUIPMENT.

REINFORCING STEEL NOTES:

1. REINFORCING STEEL SHALL CONFORM WITH ASTM A 615, GRADE 60.
2. WELDABLE REINFORCING STEEL SHALL CONFORM TO ASTM A 706.
3. UNLESS NOTED OTHERWISE, REINFORCING STEEL SHALL BE LAPPED 24"
4. REINFORCING STEEL IN CONCRETE SLAB ON GRADE SHALL BE PLACED 1 1/2" FROM THE FINISHED SURFACE OF THE SLAB.
5. REINFORCING STEEL SHALL BE CONTINUOUS IN FOOTINGS AT ALL CORNERS AND INTERSECTIONS. HOOK AND LAP ALL REINFORCEMENT 48 BAR DIAMETERS.
6. PROVIDE STANDARD CRSI HOOKS AT DISCONTINUOUS ENDS OF CONCRETE.
7. MINIMUM CLEAR SPACING BETWEEN PARALLEL REINFORCING BARS IS 2".
8. REINFORCEMENT CLEAR CONCRETE COVER:

PLACED AGAINST EARTH	3"
SIDES OF FORMED GRADE BEAM	2"
PLACED AGAINST FORM	1 1/2"
TOP OF SLAB	1 1/2"

9. MINIMUM CLEAR SPACING FROM SURFACE OF CMU TO THE SURFACE OF REINFORCING BAR IS 1/2" WHEN PLACED IN GROUT.
10. MINIMUM CLEAR SPACING BETWEEN PARALLEL REINFORCING BARS IN CMU IS 2".

STRUCTURAL STEEL NOTES:

1. STRUCTURAL STEEL SHALL CONFORM WITH THE FOLLOWING:

HOLLOW STRUCTURAL SECTION:	ASTM A 500, GRADE B
WIDE-FLANGE BEAMS:	ASTM A 992
ERECTION BOLTS:	ASTM A 307
ANCHOR RODS:	ASTM F 1554
ANGLES, PLATES, ETC.	ASTM A 36

2. STRUCTURAL STEEL SHALL BE ERECTED TRUE AND PLUMB WITH TEMPORARY BRACING FOR LATERAL STABILITY UNTIL ROOF STRUCTURE IS IN PLACE. ERECTION OF STRUCTURAL STEEL MEMBERS SHALL COMPLY WITH OSHA'S REQUIREMENTS.
3. ALL CONTACT POINTS BETWEEN ANGLES, PLATES, BEAMS, ETC. SHALL BE WELDED USING E70XX ELECTRODES UNLESS NOTED OTHERWISE.
4. WELDING SHALL CONFORM WITH AWS D1.1. ALL WELDERS SHALL BE CURRENTLY CERTIFIED WITH THE AMERICAN WELDING SOCIETY.

OPEN WEB STEEL JOIST FRAMING NOTES :

1. STEEL JOISTS AND JOIST GIRDERS SHALL CONFORM WITH THE STEEL JOIST INSTITUTE RECOMMENDED CODE OF PRACTICE FOR STEEL JOISTS AND JOIST GIRDERS.
2. JOISTS SHALL BE FIELD WELDED TO SUPPORT UNLESS NOTED OTHERWISE.
3. THE TOP AND BOTTOM CHORDS OF JOISTS SHALL NOT SUPPORT CONCENTRATED LOADS BETWEEN PANEL POINTS WITHOUT ADEQUATE REINFORCING. SEE DETAIL FOR REINFORCEMENT.
4. VERTICAL LOADS SHALL NOT BE IMPOSED ON BRIDGING.
5. UNLESS NOTED OTHERWISE JOIST SEAT DEPTHS SHALL BE PROVIDED AS FOLLOWS :
K-SERIES: 2 1/2 INCHES
LH-SERIES: 5 INCHES
6. JOISTS AND BRIDGING SHALL BE DESIGNED BY FABRICATOR TO WITHSTAND NET WIND UPLIFT LOADS IF SPECIFIED IN THE DRAWINGS.
7. ERECTION AND HANDLING OF JOISTS SHALL COMPLY WITH OSHA'S STABILITY REQUIREMENTS.
8. ALL BRIDGING AND BRIDGING ANCHORS SHALL BE COMPLETELY INSTALLED PRIOR TO PLACEMENT OF CONSTRUCTION LOADS ON JOISTS.

POST TENSIONING NOTES:

1. POST-TENSIONING STRANDS SHALL BE LOW-RELAXATION STRANDS CONFORMING TO THE FOLLOWING:

SEVEN WIRE STRAND	ASTM A416
.5" DIAMETER WITH .153 SQ. IN. CROSS SECTIONAL AREA	
ULTIMATE STRENGTH	270 KSI

2. TENDON STRESS SHALL CONFORM TO THE FOLLOWING:

MAXIMUM JACKING FORCE	216 KSI
MAXIMUM STRESS FOLLOWING PRESTRESS TRANSFER	200 KSI
MAXIMUM ANCHORAGE STRESS FOLLOWING PRESTRESS TRANSFER	189 KSI

3. EFFECTIVE FORCE SHALL BE 26 KIPS PER TENDON (LOW-RELAXATION) WHEN TENDON LENGTH IS LESS THAN 100'-0". FOR VARIANCE FROM THIS VALUE, CONTRACTOR SHALL PROVIDE FRICTION AND LONG-TERM LOSS CALCULATIONS TO THE ENGINEER FOR APPROVAL.
4. ALL ANCHORAGES, COUPLERS AND MISCELLANEOUS HARDWARE SHALL BE STANDARD AND APPROVED BY THE GOVERNING AGENCY AND THE ENGINEER.
5. UNBONDED STRANDS SHALL BE ENCASED IN SLIPPAGE SHEATHING WHICH SHALL CONSIST OF A SEALED, DURABLE WATERPROOF PLASTIC TUBING CAPABLE OF PREVENTING THE PENETRATION OF MOISTURE AND CEMENT PASTE, AND SHALL CONTAIN A RUST INHIBITING GREASE COATING. TEARS AND DAMAGE IN THE SHEATHING SHALL BE REPAIRED TO RESTORE THE WATER TIGHTNESS OF THE TIGHTNESS OF THE SHEATHING IS GUARANTEED BY THE MANUFACTURER.
6. CONTRACTOR SHALL SUBMIT SHOP DRAWINGS SHOWING TENDON LAYOUT, DEAD-END AND STRESSING END ANCHORAGE LOCATIONS, AND TENDON SUPPORT LAYOUTS WITH DETAILS NECESSARY FOR INSTALLATION FOR ENGINEER'S APPROVAL.
7. CARE SHALL BE TAKEN TO ENSURE THAT TENDONS ARE LOCATED AND HELD IN THEIR DESIGNATED POSITIONS DURING CONCRETE PLACEMENT. TOLERANCES FOR THE LOCATION OF THE TENDONS SHALL NOT BE MORE THAN ±w" VERTICALLY, EXCEPT WHEN APPROVED BY THE ENGINEER.
8. SLIGHT DEVIATIONS IN THE HORIZONTAL SPACING OF SLAB TENDONS WILL BE PERMITTED WHEN REQUIRED TO AVOID OPENINGS, INSERTS, AND DOWELS WHICH ARE SPECIFICALLY LOCATED. WHERE LOCATIONS OF TENDONS SEEM TO INTERFERE WITH EACH OTHER, ONE TENDON MAY BE MOVED HORIZONTALLY IN ORDER TO AVOID SUCH INTERFERENCE.
9. TWISTING OR INTERTWINING OF INDIVIDUAL WIRES OR STRANDS WITHIN A BUNDLE OR A BEAM WILL NOT BE PERMITTED.
10. TENDON PROFILES SHALL CONFORM TO CONTROLLING POINTS SHOWN ON THE DRAWINGS AND SHALL BE IN APPROXIMATE PARABOLIC DRAPE BETWEEN SUPPORTS. UNLESS NOTED OTHERWISE, LOW POINTS ARE AT MIDSPAN.
11. ALL DIMENSIONS SHOWING THE LOCATION OF THE TENDONS ARE TO THE CENTER OF GRAVITY OF THE TENDON, UNLESS NOTED OTHERWISE.
12. TENDONS SHALL BE SECURED TO A SUFFICIENT NUMBER OF POSITIONING DEVICES TO ENSURE CORRECT LOCATION DURING AND AFTER CONCRETE PLACEMENT, AND SHALL BE SUPPORT AT A MAXIMUM OF 3'-6" CENTERS. CHAIRS TALLER THAN 2.5" SHALL BE STAPLED TO THE FORMWORK.
13. ANCHORAGES SHALL BE RECESSED A MINIMUM OF 2". PLACE TWO CONTINUOUS #4 BARS BEHIND ALL ANCHORAGES UNLESS NOTES OTHERWISE. SPLICES SHALL BE 24" AND STAGGERED.
14. ALL POCKETS AND BLOCKOUTS REQUIRED ANCHORAGE SHALL BE ADEQUATELY REINFORCED SO AS NOT TO DECREASE THE STRENGTH OF THE STRUCTURE. ALL POCKETS SHALL BE WATERPROOFED TO PREVENT WATER LEAKAGE THROUGH OR INTO THE POCKET.
15. PLASTIC OR METAL CONDUITS MAY BE EMBEDDED IN THE CONCRETE PROVIDING THAT THE FOLLOWING CRITERIA ARE TO BE MET:
15.A. DIAMETER DOES NOT EXCEED ONE/QUARTER SLAB THICKNESS.
15.B. CONDUITS GREATER THAN OR EQUAL TO 1" DIAMETER SHALL BE LOCATED WITHIN THE MIDDLE THIRD OF THE SLAB.
15.C. CONDUITS SMALLER THAN 1"Ø MAY BE LOCATED ANYWHERE WITHIN THE SLAB AS LONG AS THE MINIMUM COVER REQUIREMENTS ARE OBSERVED.
15.D. CENTER TO CENTER SPACING OF THE CONDUITS IS NOT LESS THAN 3 TIMES THE DIAMETER OF THE LARGEST CONDUIT.
15.E. CONDUITS SHALL NOT BE ALLOWED TO INTERFERE WITH THE POST-TENSIONING TENDONS.
15.F. COLUMN AREAS SHALL BE AVOIDED.
15.G. DO NOT ALLOW EXCESS AMOUNT OF CONDUITS TO ENTER SLAB FROM ONE LOCATION.
16. PENETRATIONS SHALL NOT BE PERMITTED IN BEAMS EXCEPT AS SHOWN IN POST-TENSIONING DRAWINGS OR TYPICAL DETAILS.
17. ALL INSERTS AND SLEEVES SHALL BE CAST IN PLACE WHENEVER POSSIBLE. DRILLED AND POWER-DRIVEN FASTENERS WILL BE PERMITTED ONLY WHEN IT CAN BE SHOWN THAT THE INSERTS WILL NOT SPALL THE CONCRETE AND ARE LOCATED TO AVOID THE TENDONS AND ANCHORAGES. CONTRACTOR MUST LOCATE THE TENDONS ON THE SURFACE OF THE SLAB PRIOR TO DRILLING.
18. GROUT OR CONCRETE CONTAINING CHLORIDES SHALL NOT BE USED IN THE CONSTRUCTION OF THE POST-TENSIONED SLAB.
19. IF CONCRETE IS PLACED BY THE PUMP METHOD, SUPPORTS SHALL BE PROVIDED FOR THE PUMP HOSE. THE HOSE SHALL NOT BE ALLOWED TO RIDE ON THE TENDONS.
20. CONTRACTOR SHALL ENSURE THAT CONCRETE IS PROPERLY CONSOLIDATED BEHIND TENDON ANCHORAGES.
21. AT TRANSFER OF PRESTRESS, CONCRETE SHALL BE AS SPECIFIED IN THE CONCRETE QUALITY TABLE.
22. TENSIONING SHALL BE BY JACKING UNDER IMMEDIATE CONTROL OF A PERSON EXPERIENCED IN POST-TENSIONING WORK. CONTINUOUS INSPECTION AND RECORDING OF ELONGATION IS REQUIRED DURING ALL STRESSING OPERATIONS.
23. THE JACKING RAM AND ATTENDANT GAGE USED ON THE PROJECT SHALL HAVE BEEN CALIBRATED AND CERTIFIED BY A TESTING LABORATORY WITHIN 60 DAYS OF THEIR USE.
24. UNIFORMLY SPACED SLAB TENDONS SHALL BE STRESSED BEFORE BEAM TENDONS.
25. INDIVIDUAL TENDON FIELD READINGS OF ELONGATIONS AND/OR STRESSING FORCES SHALL NOT VARY BY MORE THAN 7% FROM CALCULATED REQUIRED VALUES SHOWN ON THE SHOP DRAWINGS. IF MEASURED ELONGATIONS VARY FROM CALCULATED VALUES BY MORE THAN 7% THE CONTRACTOR SHALL PROVIDE FRICTION CALCULATIONS AND/OR OTHER JUSTIFICATION TO THE SATISFACTION OF THE ENGINEER OF RECORD.
26. THE POST-TENSIONED FORCE PROVIDED IN THE FIELD FOR EACH STRUCTURAL MEMBER SHALL NOT BE LESS THAN THE VALUES NOTED ON THE STRUCTURAL DOCUMENTS. STRUCTURAL MEMBERS INCLUDE BEAMS, GIRDERS, AN SLABS, EACH SERVING ITS RESPECTIVE TRIBUTARY.
27. STRESSING POCKETS SHALL BE FILLED WITH NON-SHRINK GROUT AFTER STRESSING, PAINTING AND GREASE-CAPPING TO STOP MOISTURE PENETRATION.
28. DO NOT BURN OFF TENDON ENDS UNTIL THE ENTIRE FLOOR SYSTEM HAS BEEN SATISFACTORILY STRESSED AND THE ENGINEER'S APPROVAL IS OBTAINED. THE STRESSING END ANCHORS AND WEDGES SHALL BE SPRAY PAINTED WITH RUST-O-LEUM OR A SIMILAR COATING FOR CORROSION PROTECTION. INSTALL GREASE CAPS WITHIN THE FOLLOWING 24-HOUR PERIOD.
29. SLABS AND BEAMS MAY BE DE-SHORED WHEN ALL TENDONS HAVE BEEN SATISFACTORILY STRESSED AND THE ENGINEER'S APPROVAL IS OBTAINED, UNLESS SHORING IS REQUIRED TO CARRY FLOORS ON ABOVE LEVELS.

POST-INSTALLED ANCHORAGE SYSTEMS NOTES:

1. ALL POST-INSTALLED ANCHOR SYSTEMS SHALL BE INSTALLED ACCORDING TO THE MANUFACTURER'S INSTRUCTIONS, INCLUDING BUT NOT LIMITED TO THE ITEMS CONTAINED IN THIS SECTION.
2. TITEN HD ANCHORS:
A. INSTALLATION SHALL CONSIST OF DRILLING A HOLE IN THE BASE MATERIAL THE SAME DIAMETER AS THE NOMINAL DIAMETER OF THE ANCHOR TO BE INSTALLED.
B. DRILL THE HOLE TO THE SPECIFIED EMBEDMENT DEPTH PLUS $\frac{1}{2}$" TO ALLOW THE THREAD TAPPING DUST TO SETTLE.
C. DRILLED HOLE SHALL BE THOROUGHLY CLEANED & CLEARED OF ALL LOOSE DEBRIS MECHANICALLY AND WITH COMPRESSED AIR.
D. TIGHTEN THE ANCHOR INTO THE BASE MATERIAL UNTIL THE HEX WASHER HEAD CONTACTS THE FIXTURE.
E. ANCHORS ARE NOT TO BE REUSED AFTER INITIAL INSTALLATION.
3. HILTI HIT-RE 500-SD EPOXY ADHESIVE ANCHORING SYSTEM:
A. TOOLS USED FOR APPLICATION OF THE EPOXY ANCHORING SYSTEM SHALL BE IN ACCORDANCE TO MANUFACTURER'S RECOMMENDATIONS.
B. DRILLED HOLE SHALL BE THOROUGHLY CLEANED AND CLEARED OF ALL LOOSE DEBRIS MECHANICALLY AND WITH COMPRESSED AIR IN ACCORDANCE WITH MANUFACTURER'S RECOMMENDATIONS.
D. THE DRILLED HOLES AND ANCHORS MUST BE FREE OF DUST, DEBRIS, ICE, OIL, GREASE AND OTHER CONTAMINANTS PRIOR TO INSTALLATION.
E. MINIMUM EMBEDMENT OF 4" SHALL BE USED FOR $\frac{3}{8}$" TO $\frac{5}{8}$" DIA. ANCHOR RODS, AND 6" EMBEDMENT FOR $\frac{3}{4}$" TO 1" DIAMETER RODS.
4. OBSERVATIONS FOR ALL DRILLED HOLES SHALL BE PERFORMED BY EITHER OWNER REPRESENTATIVE, GENERAL CONTRACTOR, OR A THIRD PARTY PRIOR TO ANCHOR INSTALLATION.

QUALITY ASSURANCE PLAN :

GENERAL REQUIREMENTS:

1. THE OWNER SHALL BE RESPONSIBLE FOR HIRING THE SPECIAL INPECTOR(S) AND MUST INCUR ALL ASSOCIATED COSTS. ALL REINSPECTION COSTS SHALL BE THE RESPONSIBILITY OF THE CONTRACTOR.
2. THE STATEMENT OF SPECIAL INSPECTIONS SHALL BE AS SHOWN BELOW.
3. SPECIAL INSPECTORS SHALL SUBMIT INSPECTION REPORTS TO THE BUILDING OFFICIAL, AND TO THE REGISTERED DESIGN PROFESSIONAL IN RESPONSIBLE CHARGE. THE REPORTS SHALL BE PREPARED IN ACCORDANCE WITH THE REQUIREMENTS CONTAINED IN SECTION 1704.1.2 OF THE IBC-2009.
4. THE REQUIRED SPECIAL INSPECTIONS FOR THIS PROJECT HAVE BEEN SUMMARIZED BELOW. ALL OTHER NORMAL INSPECTIONS AND TESTING NOT INCLUDED IN THE SPECIAL INSPECTIONS SHOWN BELOW (I.E. SOILS COMPACTION TESTING, CONCRETE SAMPLING AND TESTING, PERMIT AGENCY INSPECTIONS, ECT.) SHALL ALSO BE PAID FOR BY THE GENERAL CONTRACTOR. ALL NORMAL TESTING AND INSPECTIONS, AS WELL AS ALL QUALITY ASSURANCE TESTING AND INSPECTIONS (SPECIAL INSPECTIONS) SHALL BE COORDINATED AND SCHEDULED BY THE GENERAL CONTRACTOR TO FIT WITHIN THE WORKFLOW OF THE PROJECT.

INSPECTION OF FABRICATION:

5. ALL STRUCTURAL LOAD BEARING MEMBERS AND ASSEMBLIES FABRICATED IN THE FABRICATORS' SHOP SHALL BE REQUIRED TO HAVE SPECIAL INSPECTIONS. THESE SPECIAL INSPECTIONS SHALL CONSIST OF VERIFICATION BY SPECIAL INSPECTOR THAT FABRICATOR MAINTAINS DETAILED FABRICATION AND QUALITY CONTROL PROCEDURES THAT PROVIDE A BASIS FOR INSPECTION CONTROL OF THE WORKMANSHIP AND THE FABRICATORS ABILITY TO CONFORM TO APPROVED CONSTRUCTION DOCUMENTS AND REFERENCED STANDARDS. THESE INSPECTIONS ARE NOT REQUIRED IF THE FABRICATOR IS REGISTERED AND APPROVED TO PERFORM SUCH WORK WITHOUT SPECIAL INSPECTION. THE FABRICATOR SHALL SUBMIT A CERTIFICATE OF COMPLIANCE TO THE BUILDING OFFICIAL STATING THAT THE WORK WAS PERFORMED IN ACCORDANCE WITH THE APPROVED CONSTRUCTION DOCUMENTS.

SPECIAL INSPECTIONS:

6. STEEL CONSTRUCTION: THE SPECIAL INSPECTIONS FOR THE STEEL ELEMENTS OF THE FACILITY SHALL BE AS FOLLOWS AND AS CONTAINED IN TABLE A BELOW:
a. PERIODIC INSPECTION FOR MATERIAL VERIFICATION OF HIGH-STRENGTH BOLTS, NUTS & WASHERS. THIS INCLUDES IDENTIFICATION MARKINGS TO CONFORM TO ASTM STANDARDS SPECIFIED IN THE APPROVED CONSTRUCTION DOCUMENTS. ALSO INCLUDES MANUFACTURER'S CERTIFICATE OF COMPLIANCE.
b. PERIODIC INSPECTION IS REQUIRED FOR HIGH-STRENGTH BOLTING OPERATIONS USING BEARING-TYPE AND SLIP-CRITICAL CONNECTIONS.
c. PERIODIC, VISUAL INSPECTION IS REQUIRED FOR FIELD WELDING OF ALL SINGLE-PASS FILLET WELDING LESS THAN 5/16" USED FOR STRUCTURAL STEEL CONNECTIONS.
d. PERIODIC, VISUAL INSPECTION IS REQUIRED FOR FIELD WELDING OF THE FLOOR & ROOF DECKING.
e. REINFORCING STEEL IS NOT TO BE WELDED AND THEREFORE NO SPECIAL INSPECTIONS ARE REQUIRED FOR THIS ITEM. FIELD INSPECTIONS ARE NOT REQUIRED FOR RAILINGS & MISCELLANEOUS ORNAMENTAL STEEL.

TABLE 'A' - STEEL CONSTRUCTION (REFERENCE TABLE 1704.3 - IBC 2009)

VERIFICATION & INSPECTION ITEM	CONTINUOUS	PERIODIC
1a, 1b		X
2a		X
2b		X
5a1	X	
5a5, 5a6, 6		X

7. CONCRETE CONSTRUCTION: THE SPECIAL INSPECTIONS FOR THE CONCRETE WALL PANELS SHALL BE AS SHOWN IN TABLE BELOW. THE SPOT AND CONTINUOUS FOOTINGS DO NOT REQUIRE SPECIAL INSPECTIONS

TABLE 'B' - CONCRETE CONSTRUCTION (REFERENCE TABLE 1704.4 - IBC 2009)

VERIFICATION & INSPECTION ITEM	CONTINUOUS	PERIODIC
1, 4, 5, 8, 10		X
3, 6,	X	

8. MASONRY CONSTRUCTION: THE SPECIAL INSPECTIONS FOR THE MASONRY ELEMENTS OF THE EPISD HART ELEMENTARY SCHOOL SHALL BE IN ACCORDANCE WITH LEVEL 1 REQUIREMENTS OF THE IBC 2009 AND AS FOLLOWS AND AS CONTAINED IN TABLE C BELOW:
a. PERIODIC INSPECTION, DURING THE TIME THE TASK IS BEING PERFORMED, IS REQUIRED FOR PROPORTIONS OF SITE PREPARED MORTAR, CONSTRUCTION OF MORTAR JOINTS, AND LOCATION OF REINFORCING AND CONNECTORS.
b. THE PERIODIC INSPECTION SHALL VERIFY: 1) SIZE AND LOCATION OF STRUCTURAL ELEMENTS, 2) TYPE, SIZE, AND LOCATION OF ANCHORS INCLUDING OTHER DETAILS OF ANCHORAGE OF MASONRY TO OTHER STRUCTURAL MEMBERS, 3) SPECIFIED SIZE, GRADE, AND TYPE OF REINFORCEMENT, AND 4) PROTECTION OF MASONRY DURING COLD OR HOT WEATHER.
c. PERIODIC INSPECTION IS REQUIRED PRIOR TO GROUTING TO VERIFY: 1) THAT THE GROUT SPACE IS CLEAN, 2) PLACEMENT OF REINFORCEMENT AND CONNECTORS, 3) PROPORTIONS OF SITE-PREPARED GROUT, AND 4) CONSTRUCTION OF MORTAR JOINTS
d. CONTINUOUS INSPECTION IS REQUIRED OF THE GROUT PLACEMENT TO ENSURE COMPLIANCE WITH THE IBC 2009 AND THE CONSTRUCTION DOCUMENTS
e. CONTINUOUS INSPECTION IS REQUIRED OF THE PREPARATION OF ANY REQUIRED GROUT SPECIMENS, MORTAR SPECIMENS, AND PRISMS
f. PERIODIC INSPECTION IS REQUIRED FOR COMPLIANCE WITH THE REQUIRED INSPECTION PROVISIONS

TABLE 'C' - MASONRY CONSTRUCTION (REFERENCE TABLE 1704.5.1 - IBC 2009)

VERIFICATION & INSPECTION ITEM	CONTINUOUS	PERIODIC
4.a, 4.b, 4.c		X
5.a, 5.b, 5.c, 5.e		X
6.a, 6.b, 6.c, 6.d		X
7	X	
8		X

9. SEISMIC RESISTANCE REQUIREMENTS
a. QUALITY PLAN FOR THE SEISMIC RESISTANCE OF THIS PROJECT WILL INCLUDE THE FOLLOWING ITEMS:
1) SEISMIC-FORCE-RESISTING SYSTEM FOR THIS BUILDING: THIS SYSTEM CONSISTS OF MASONRY SHEAR WALLS AND ORDINARY CONCENTRIC STEEL BRACED FRAMES.
b. THE SPECIAL INSPECTIONS AND TESTING TO BE PROVIDED FOR THE ITEMS 1707 AND 1708 OF THE IBC-2009
c. THE TESTING AND SPECIAL INSPECTION REPORTS SHALL BE DISTRIBUTED WEEKLY DURING THE CONSTRUCTION PERIOD FOR EACH ELEMENT THE REPORTS SHALL BE SUBMITTED TO THE FOLLOWING:
1) BUILDING OFFICIAL AND
2) REGISTERED DESIGN PROFESSIONAL
d. CONTRACTOR RESPONSIBILITY: EACH CONTRACTOR RESPONSIBLE FOR THE CONSTRUCTION OF ANY OF THE SYSTEMS LISTED ABOVE SHALL SUBMIT A WRITTEN CONTRACTORS STATEMENT OF RESPONSIBILITY TO THE BUILDING OFFICIAL, AND THE REGISTERED DESIGN PROFESSIONAL PRIOR TO THE COMMENCEMENT OF WORK. THE CONTRACTORS' STATEMENT OF RESPONSIBILITY SHALL CONTAIN THE FOLLOWING:
1) ACKNOWLEDGMENT OF AWARENESS OF THE SPECIAL REQUIREMENTS CONTAINED IN THE QUALITY ASSURANCE PLAN.
2) ACKNOWLEDGMENT THAT CONTROL WILL BE EXERCISED TO OBTAIN CONFORMANCE WITH THE CONSTRUCTION DOCUMENTS.
3) PROCEDURES FOR EXERCISING CONTROL WITHIN THE CONTRACTORS' ORGANIZATION, THE METHOD AND FREQUENCY OF REPORTING AND THE DISTRIBUTION OF REPORTS.
4) IDENTIFICATION AND QUALIFICATIONS OF THE PERSON(S) EXCERCISING SUCH CONTROL AND THEIR POSITION(S) IN THE ORGANIZATION.

STRUCTURAL OBSERVATIONS

10. STRUCTURAL OBSERVATIONS SHALL BE PERFORMED IN ACCORDANCE WITH SECTIONS 1709 OF THE IBC-2009.

LEGEND :

ARCH'L	ARCHITECTURAL
BOA	BOTTOM OF ANGLE
BOL	BOTTOM OF LINTEL
BOW	BOTTOM OF WALL
C.A.	COLUMN ABOVE
C.B.	COLUMN BELOW
C.J.	CONTROL JOINT
C.P.	CENTER POINT
COL	COLUMN
CONSTR. JT.	CONSTRUCTION JOINT
D.B.A.	DEFORMED BAR ANCHOR
DBA	DEFORMED BAR ANCHOR
E.J.	EXPANSION JOINT
E.W.	EACH WAY
EA	EACH
E.F.	EACH FACE
EQ	EQUAL
EXIST	EXISTING
EXP. BOLT	EXPANSION BOLT
F.F. ELEV.	FINISHED FLOOR ELEVATION
F.V.	FIELD VERIFY
FAB	FABRICATOR
H.S.	HEADED STUD
HOR.	HORIZONTAL
HSS	HOLLOW STRUCTURAL SECTION
I,F,	INSIDE FACE
J.B. EL.	JOIST BEARING ELEVATION
JT.	JOINT
MECH'L	MECHANICAL
MFR.	MANUFACTURER
O.S.	ON CENTER
O.F.	OUTSIDE FACE
OPP. HD.	OPPOSITE HAND
PENET.	PENETRATION
R	RADIUS
REINF	REINFORCING
SIM.	SIMILAR
SPA	SPACE
STD	STANDARD
STIFF	STIFFENER
T.O.B. ELEV	TOP OF BEAM ELEVATION
T.O.F. ELEV	TOP OF FOOTING ELEVATION
T.O.A.	TOP OF STEEL (BOTTOM OF DECK)
T.O.B.	TOP OF TRUSS
T.O.W. ELEV	TOP OF WALL ELEVATION
T.S.	STRUCTURAL TUBE
TYP.	TYPICAL
U.N.O.	UNLESS NOTED OTHERWISE
VERT.	VERTICAL
WP	WORK POINT

hkn engineers

100% CONSTRUCTION DOCUMENTS

REFERENCES -- BENCHMARKS

DATE | REVISIONS | BY

ENGINEER SEAL

STATE OF TEXAS
JAVIER M. CARLIN
89231
REGISTERED
PROFESSIONAL ENGINEER
03/03/16

SCALE
HOR: SHOWN
VER: SHOWN

DATE 03/03/16
DESIGN BY V.L, E.R., J.C.
DRAWN BY E.O.
CHKD. BY J.C.
APPD. BY J.C.

PROJECT NAME
NORTHGATE TRANSFER CENTER
EL PASO, TEXAS

CITY OF EL PASO
CAPITAL IMPROVEMENT DEPARTMENT

SHEET TITLE
STRUCTURAL NOTES

SHEET
S000

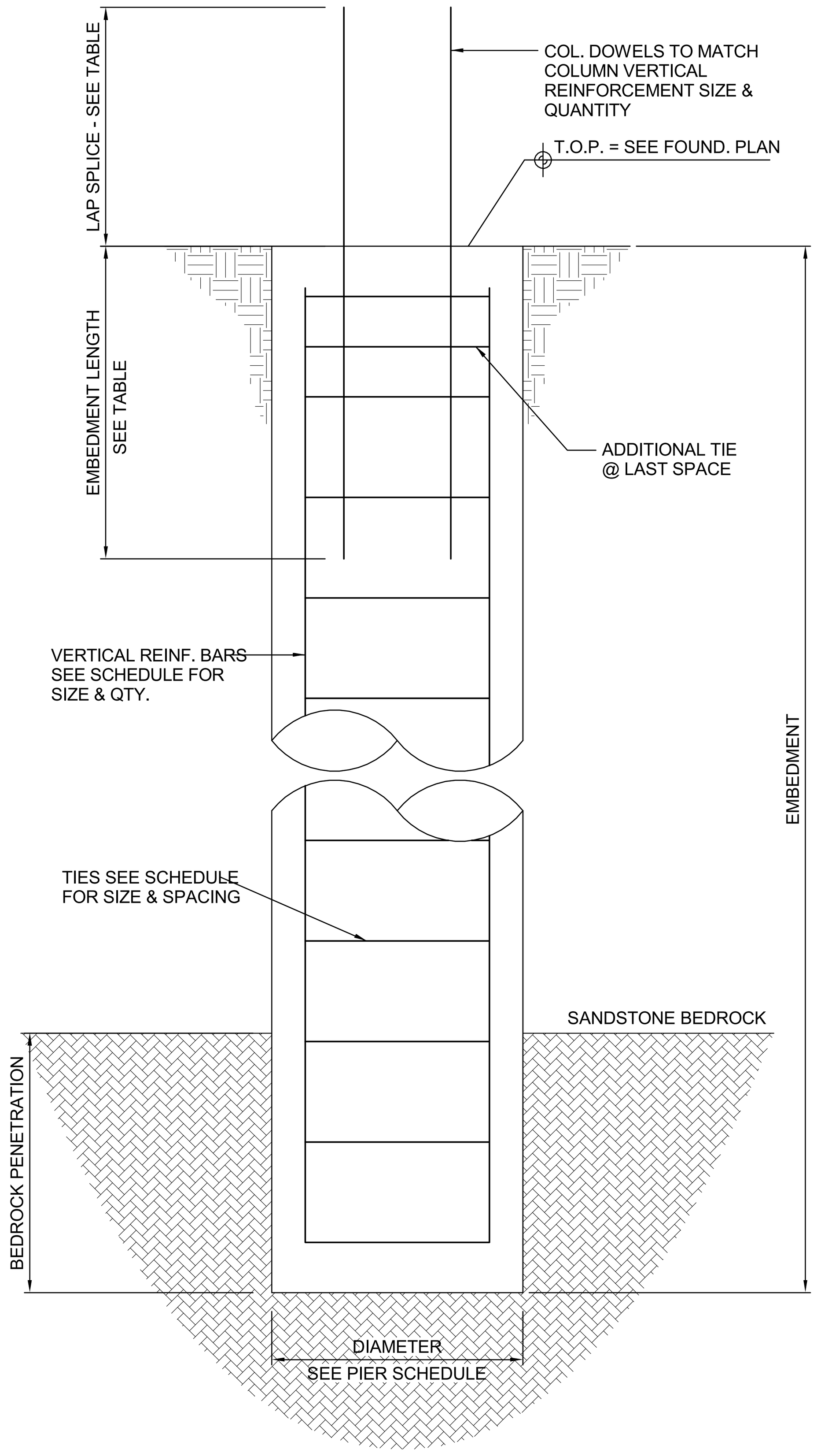

STRAIGHT SHAFT DRILLED CONCRETE PIER SCHEDULE					
MARK	DIAMETER	EMBEDMENT	REINFORCEMENT		DESIGN
			VERT. BARS	TIES	LOAD, KIPS
P1	2'-6"	20'-0"	9-#8	#3 @ 12" O.C.	70
P2	3'-0"	24'-0"	10-#9	#3 @ 18" O.C.	120
P3	4'-0"	24'-0"	14-#10	#3 @ 18" O.C.	150
P4	4'-0"	42'-0"	14-#10	#3 @ 18" O.C.	200
P5	4'-0"	50'-0"	14-#10	#3 @ 18" O.C.	250
P6	4'-0"	60'-0"	14-#10	#3 @ 18" O.C.	300

PIER DOWEL EMBEDMENT TABLE	
BAR SIZE	EMBEDMENT LENGTH
#6	2'-0"
#7	2'-6"
#8	2'-10"
#9	3'-2"
#10	3'-6"
#11	4'-0"

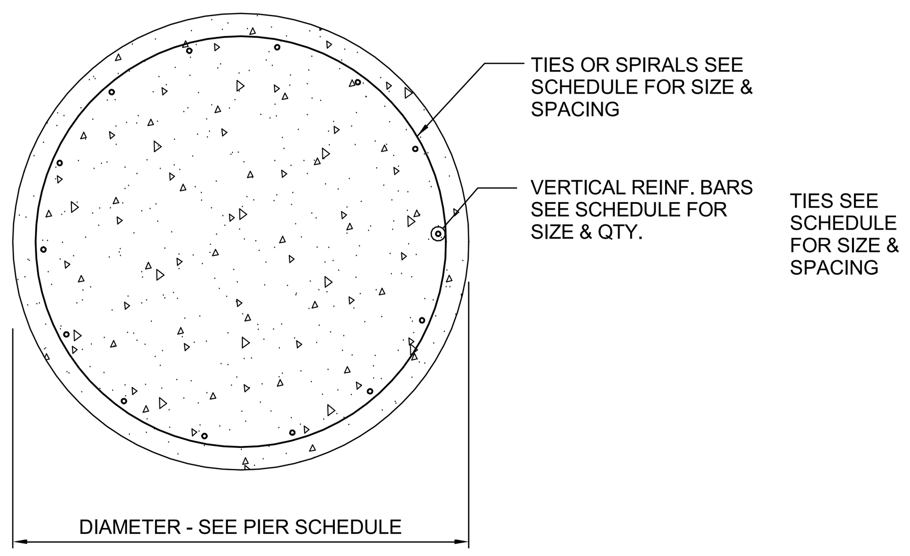

PLAN VIEW

1 SG001 DRILLED PIER SCHEDULE

NO SCALE

CONCRETE COLUMN SCHEDULE	
	TYPICAL
LEVEL 2 = +[15'-8"]	
COL. SIZE (INCHES)	20" x 20"
VERT. REINF.	4- #9
TIES (SIZE & SPACING - IN)	#4 @ 12"
f'c (PSI)	4,000
TOP OF PIER ELEV. VARIES	

COLUMN SPLICE SCHEDULE	
BAR SIZE	LAP LENGTH, FT-IN
#6	3'-3"
#7	3'-10"
#8	4'-4"
#9	4'-10"
#10	5'-5"
#11	7'-0"

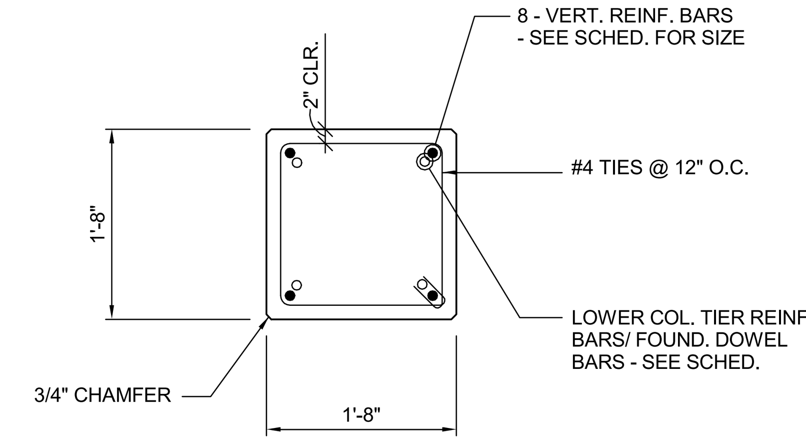

2 SG001 CONCRETE COLUMN SCHEDULE

SC: 3/4" = 1' - 0"

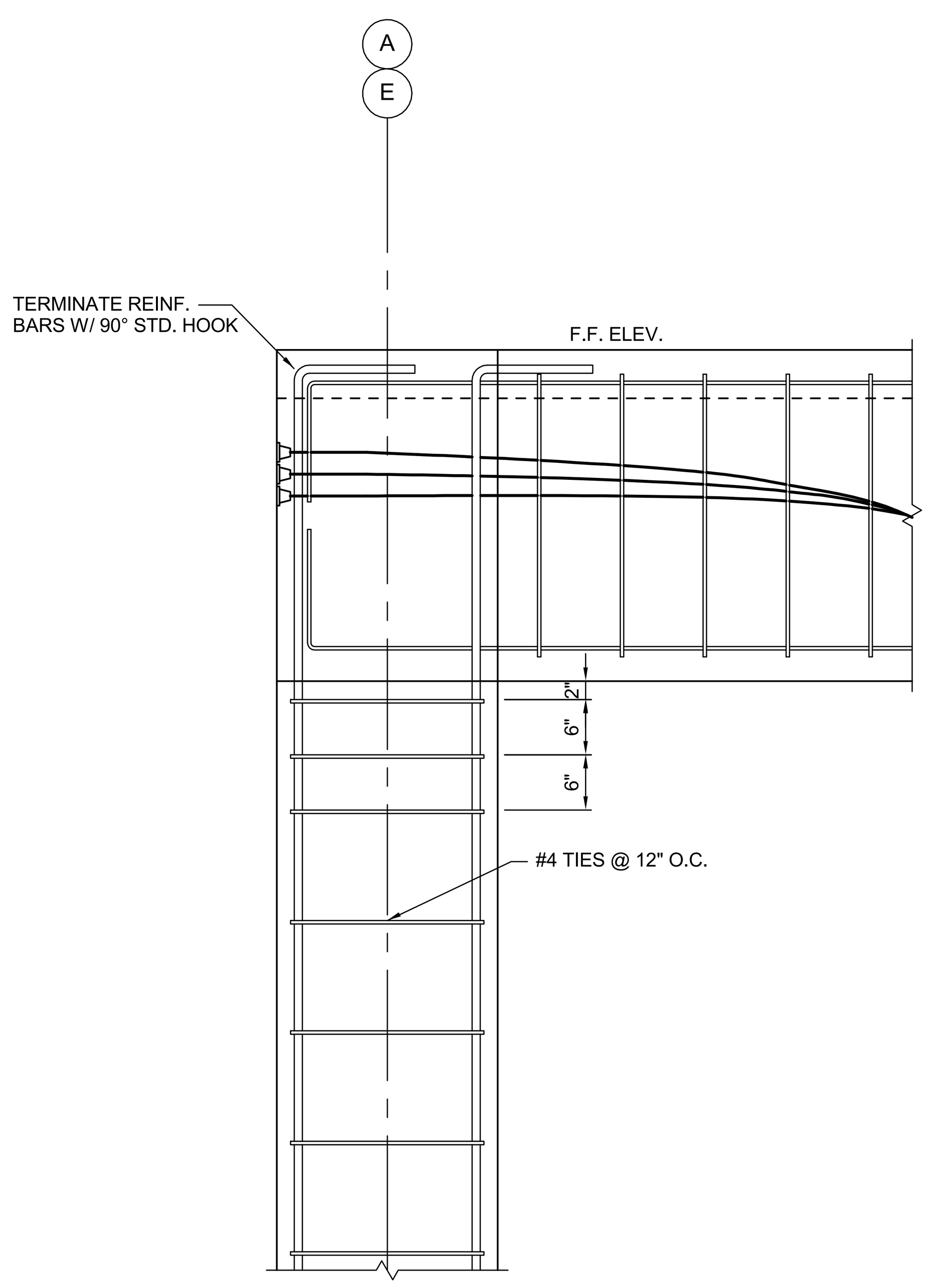

3 SG001 COL. REINF. AT TOP LEVEL

SC: 3/4" = 1' - 0"

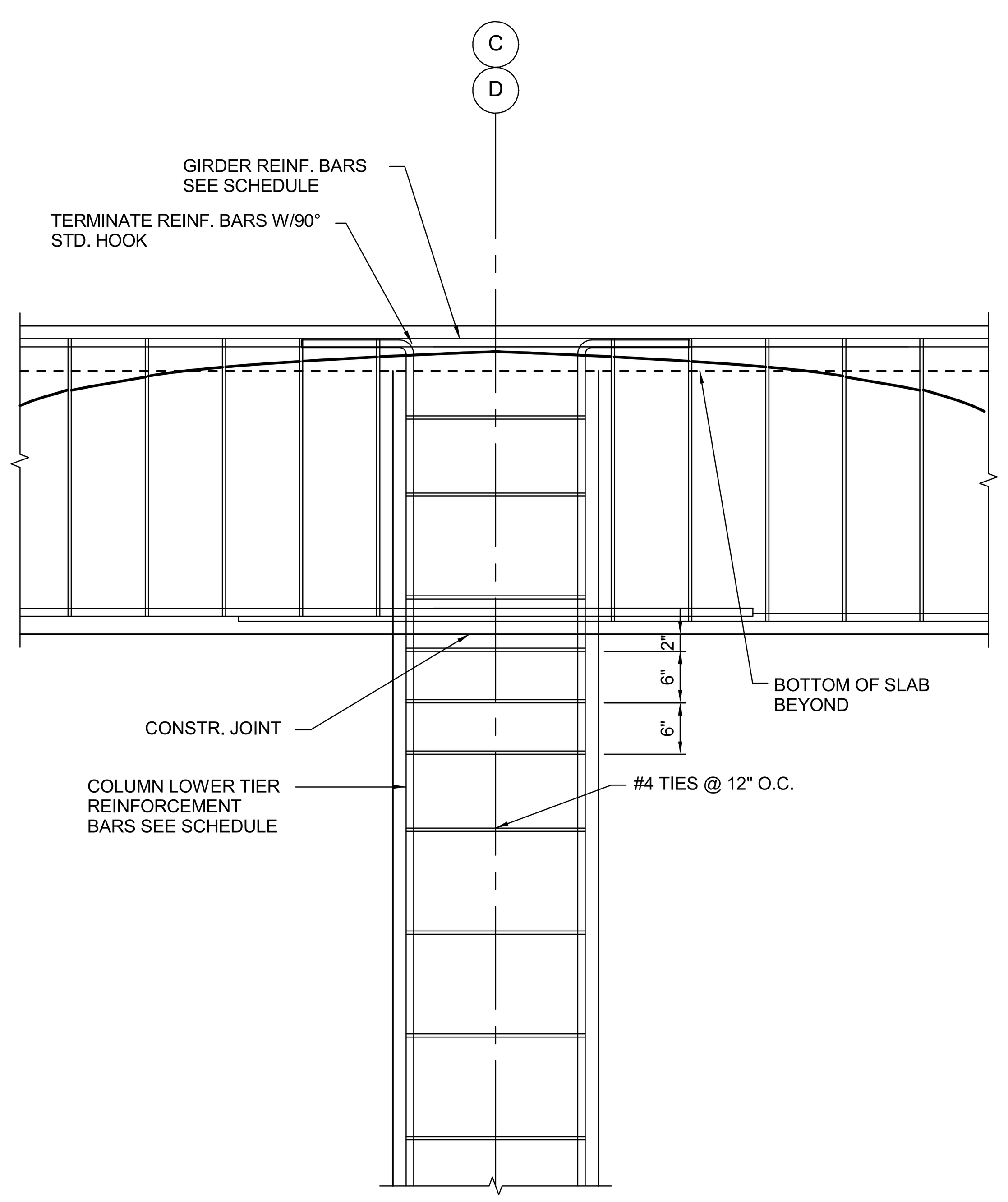

4 SG001 COL. SPLICE DETAIL

SC: 3/4" = 1' - 0"

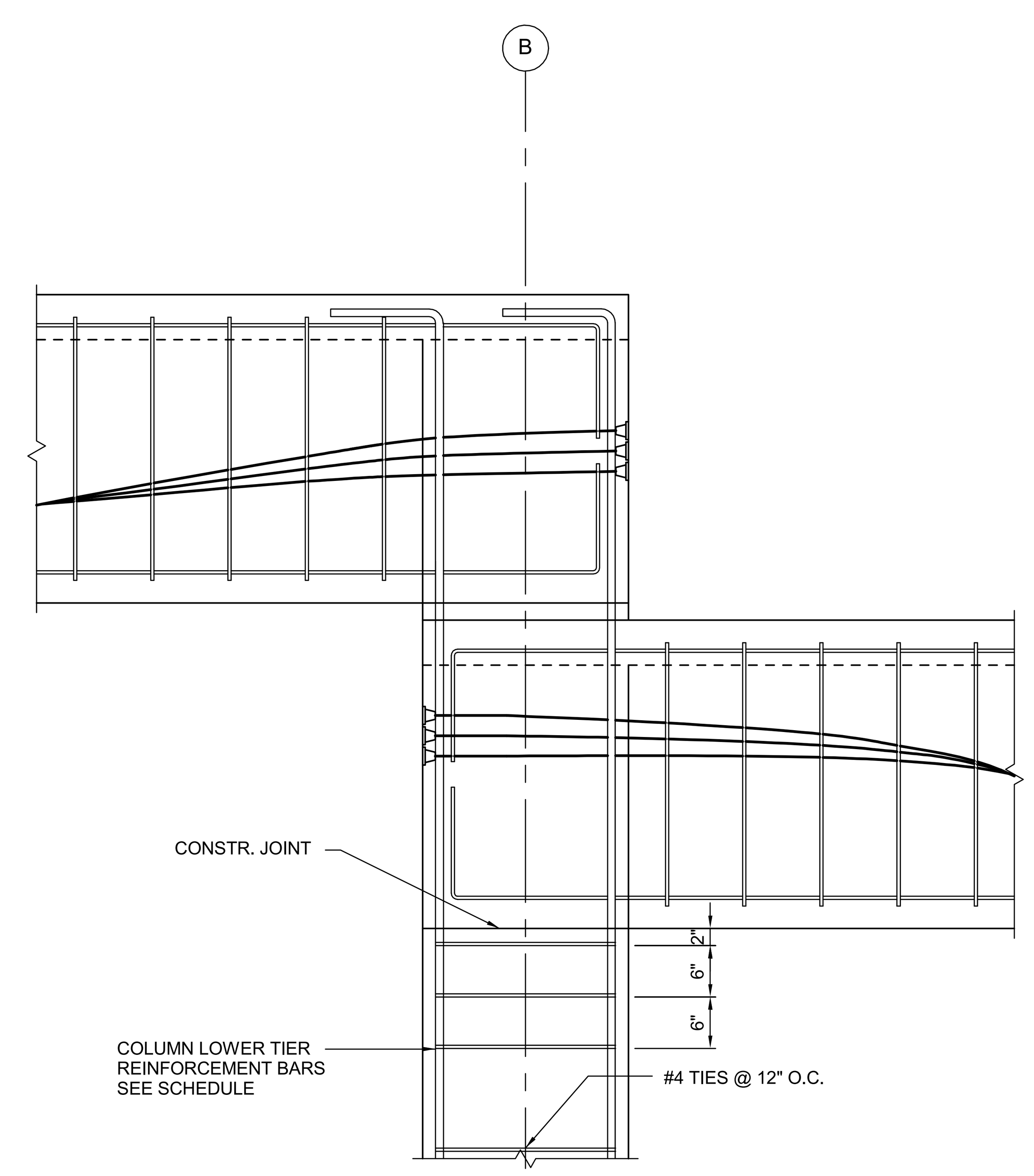

5 SG001 COL. REINF. @ RAMP

SC: 3/4" = 1' - 0"

100% CONSTRUCTION DOCUMENTS

hkn engineers
3825 Onis Drive / El Paso, Tx. 79912 FIRM REG. # F-000236
ph. (915) 833-2100 / fax (915) 833-3855 www.hknengineers.com

REFERENCES – BENCHMARKS

DATE | REVISIONS | BY

ENGINEER SEAL

STATE OF TEXAS JAVIER M. CARLIN 89231 PROFESSIONAL ENGINEER

03/03/16

SCALE HOR: SHOWN VER: SHOWN

DATE: DESIGN BY: V.L.E.R., J.C. DRAWN BY: E.O. CHKD. BY: J.C. APPD. BY: J.C.

PROJECT NAME

NORTHGATE TRANSFER CENTER

EL PASO, TEXAS

CITY OF EL PASO

CAPITAL IMPROVEMENT DEPARTMENT

THE CITY OF EL PASO TEXAS

SHEET TITLE

PIER AND COLUMN SCHEDULES

SHEET

SG001

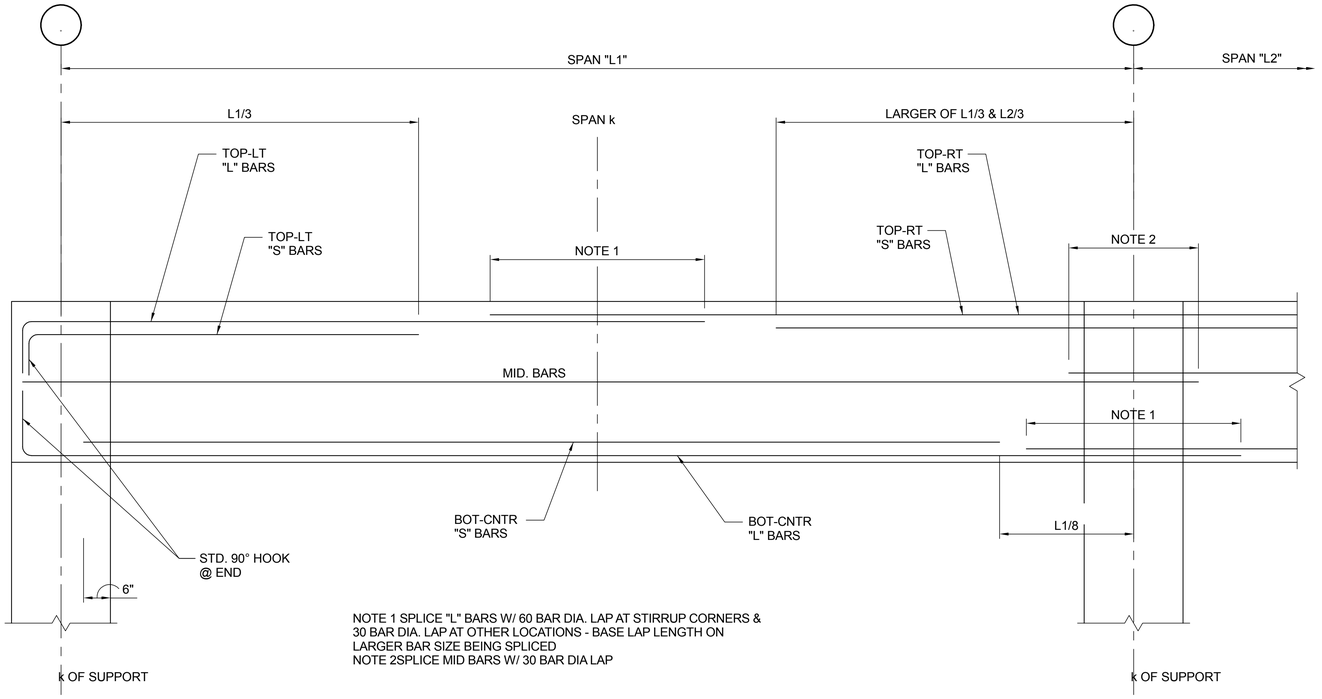

NOTE 1 SPLICE "L" BARS W/ 60 BAR DIA. LAP AT STIRRUP CORNERS & 30 BAR DIA. LAP AT OTHER LOCATIONS - BASE LAP LENGTH ON LARGER BAR SIZE BEING SPLICED
NOTE 2SPLICE MID BARS W/ 30 BAR DIA LAP

1 / SG002 TYPICL BEAM REINFORCEMENT PROFILE

NO SCALE

END SPAN

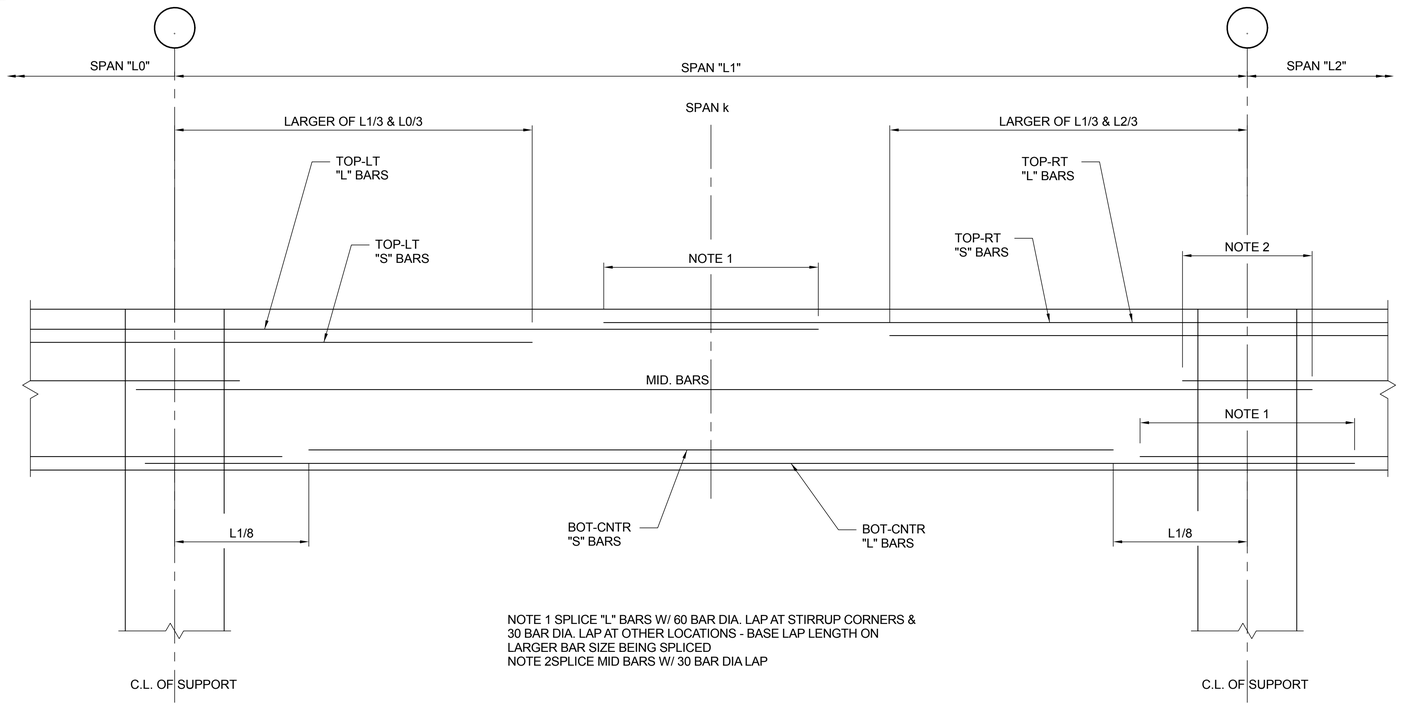

NOTE 1 SPLICE "L" BARS W/ 60 BAR DIA. LAP AT STIRRUP CORNERS & 30 BAR DIA. LAP AT OTHER LOCATIONS - BASE LAP LENGTH ON LARGER BAR SIZE BEING SPLICED
NOTE 2SPLICE MID BARS W/ 30 BAR DIA LAP

2 / SG002 TYPICL BEAM REINFORCEMENT PROFILE

NO SCALE

MID SPAN

CONCRETE BEAM/GIRDER SCHEDULE

MARK	SPAN	WIDTH (IN)	DEPTH (IN)	LONGITUDINAL REINFORCEMENT BARS			STIRRUPS			NOTES
				PLACEMENT	NUMBER & SIZE	TYPE	SIZE	TYPE	SPACING	
G1	25'-8"	18	36	TOP LEFT	2-#9	L	#4	B	LT: @ 2", REM. @ 15"	
				BOTTOM CENTER	2-#9	L			RT: @ 2", REM. @ 15"	
				TOP RIGHT	2-#9	L				
G2	25'-8"	18	36	TOP LEFT	2-#9	L	#4	a	LT: @ 2", REM. @ 15"	
				BOTTOM CENTER	2-#9	L			RT: @ 2", REM. @ 15"	
				TOP RIGHT	2-#9	L				
B1	- - -	18	36	TOP LEFT	2-#9	L	#4	B	LT: @ 2", REM. @ 15"	
				BOTTOM CENTER	3-#8	L			RT: @ 2", REM. @ 15"	
				TOP RIGHT	2-#9	L				
B2	30'-0"	18	36	TOP LEFT	3-#8	L	#4	B	LT: @ 2", REM. @ 15"	
				BOTTOM CENTER	2-#9	L			RT: @ 2", REM. @ 15"	
				TOP RIGHT	3-#8	L				
B2A	30'-0"	18	30	TOP LEFT	3-#8	L	#4	B	LT: @ 2", REM. @ 15"	
				BOTTOM CENTER	2-#9	L			RT: @ 2", REM. @ 15"	
				TOP RIGHT	3-#8	L				
B3	30'-0"	18	36	TOP LEFT	CONT.	L	#4	B	LT: @ 2", REM. @ 15"	
				BOTTOM CENTER	2-#9	L			RT: @ 2", REM. @ 15"	
				TOP RIGHT	3-#8	L				
B3A	30'-0"	18	VARIES	TOP LEFT	CONT.	L	#4	B	LT: @ 2", REM. @ 15"	SEE 2/SG-401 FOR DEPTH
				BOTTOM CENTER	2-#9	L			RT: @ 2", REM. @ 15"	
				TOP RIGHT	3-#8	L				
B4	30'-0"	18	36	TOP LEFT	CONT.	L	#4	B	LT: @ 2", REM. @ 15"	
				BOTTOM CENTER	2-#9	L			RT: @ 2", REM. @ 15"	
				TOP RIGHT	3-#8	L				
B5	30'-0"	18	36	TOP LEFT	3-#8	L	#4	B	LT: @ 2", REM. @ 15"	
				BOTTOM CENTER	2-#9	L			RT: @ 2", REM. @ 15"	
				TOP RIGHT	3-#8	L				
B6	30'-0"	18	36	TOP LEFT	CONT.	L	#4	B	LT: @ 2", REM. @ 15"	
				BOTTOM CENTER	2-#9	L			RT: @ 2", REM. @ 15"	
				TOP RIGHT	3-#8	L				
B6A	30'-0"	18	VARIES	TOP LEFT	CONT.	L	#4	B	LT: @ 2", REM. @ 15"	SEE 1/SG-401 FOR DEPTH
				BOTTOM CENTER	2-#9	L			RT: @ 2", REM. @ 15"	
				TOP RIGHT	3-#8	L				
B7	30'-0"	18	36	TOP LEFT	CONT.	L	#4	A	LT: @ 2", REM. @ 15"	
				BOTTOM CENTER	2-#9	L			RT: @ 2", REM. @ 15"	
				TOP RIGHT	3-#8	L				
B8	30'-0"	30	36	TOP LEFT	3-#8	L	#4	A	LT: @ 2", REM. @ 15"	
				BOTTOM CENTER	2-#9	L			RT: @ 2", REM. @ 15"	
				TOP RIGHT	3-#8	L				

3 / SG002 CONCRETE BEAM SCHEDULE

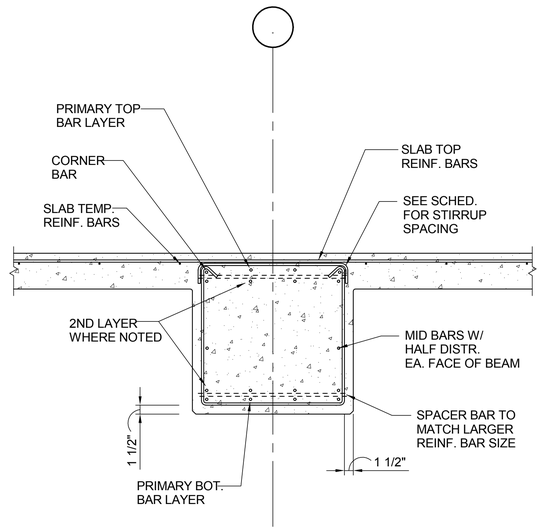

4 / SG002 TYPICL BEAM REINFORCEMENT SECTION

NO SCALE

100% CONSTRUCTION DOCUMENTS

hkn engineers
3006 Dyer Drive / El Paso, TX 79922
ph: (915) 532-2300 / fax: (915) 532-3855
TBPE REG. # F-439

REFERENCES – BENCHMARKS

BY	REVISIONS	DATE

ENGINEER SEAL

STATE OF TEXAS
JAVIER M. CARLIN
89231
LICENSED PROFESSIONAL ENGINEER
03/03/16

SCALE
HOR. SHOWN
VER. SHOWN

DATE 03/03/16
DESIGN BY V.T. E.K. J.C.
DRAWN BY C.G.
CHKD. BY J.C.
APPD. BY J.C.

PROJECT NAME

NORTHGATE TRANSFER CENTER

EL PASO, TEXAS

CITY OF EL PASO
CAPITAL IMPROVEMENT DEPARTMENT

SHEET TITLE

CONCRETE BEAM REINFORCEMENT DETAILS & SCHEDULE

SHEET

SG002

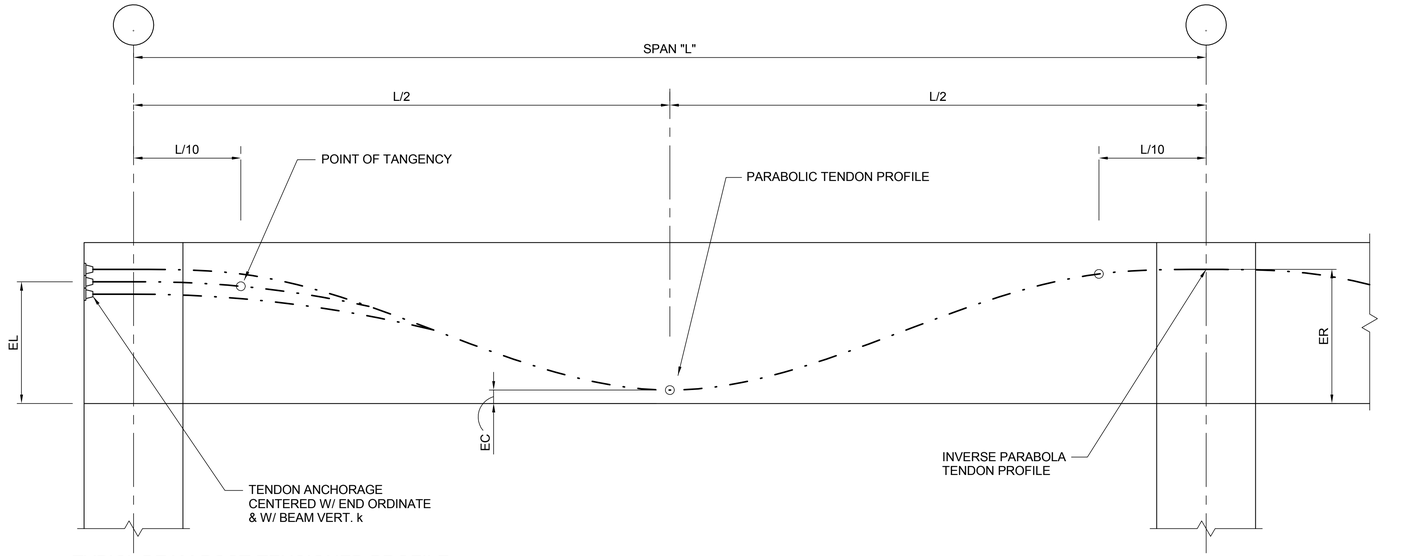

1 SG003 TYPICL BEAM POST-TENSIONED PROFILE

END SPAN

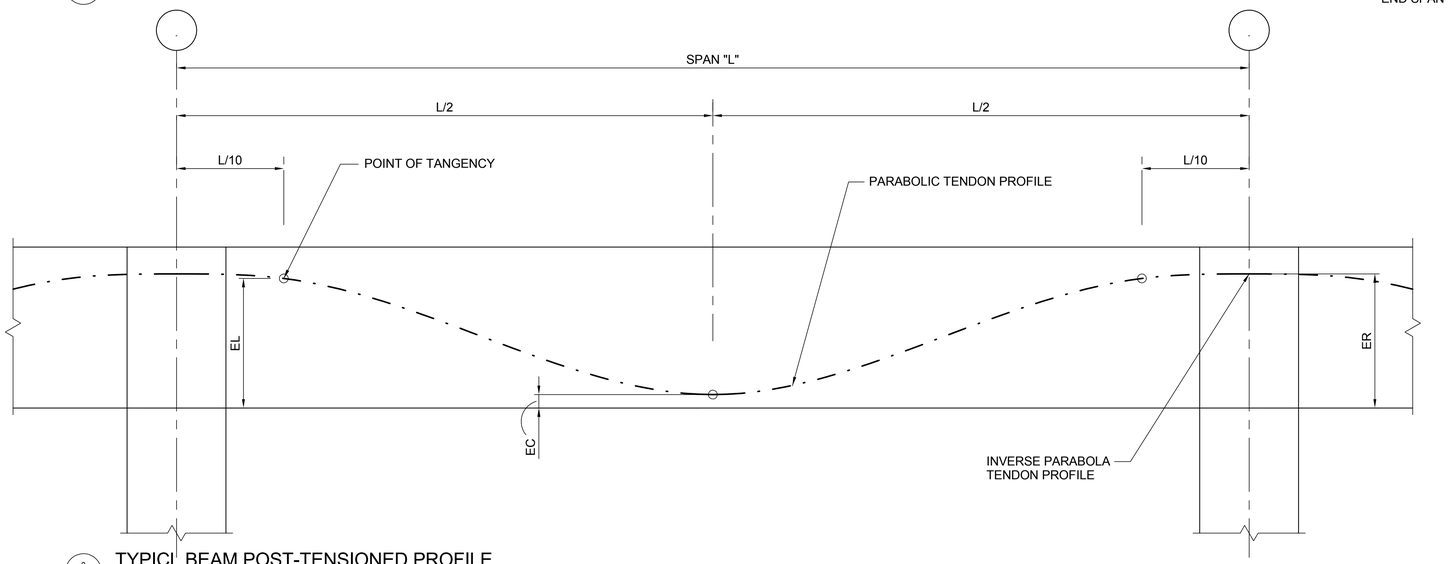

2 SG003 TYPICL BEAM POST-TENSIONED PROFILE

END SPAN

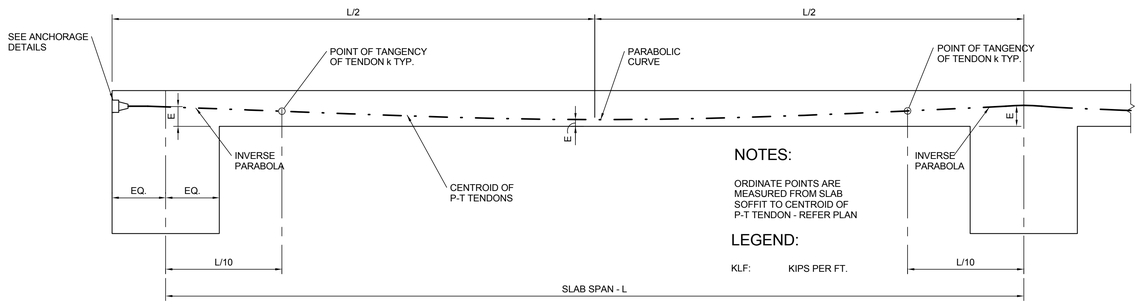

3 S-004 POST-TENSIONED SLAB PROFILE

NO SCALE

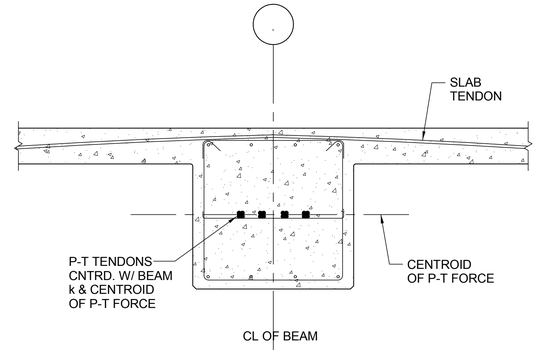

ARRANGE P-T TENDONS TO ACHIEVE MAX. & MIN. REQUIRED OFFSETS

4 SG003 TYPICL BEAM POST-TENSIONED SECTION

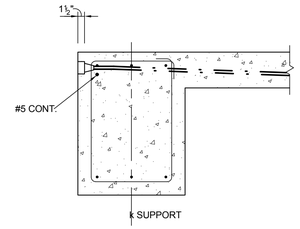

SPANDREL BEAM/GIRDER

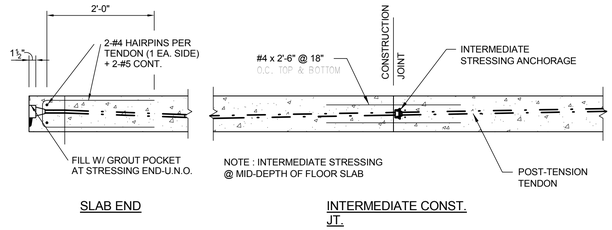

SLAB END

INTERMEDIATE CONST. JT.

5 SG003 TENDON ANCHORAGE DETAILS

NO SCALE

REFERENCES – BENCHMARKS

BY	REVISIONS	DATE

ENGINEER SEAL

STATE OF TEXAS
JAVIER M. CARLIN
89231
LICENSED PROFESSIONAL ENGINEER
03/03/16

SCALE
HOR. SHOWN
VER. SHOWN

DATE 03/03/16
DESIGN BY V.L.E.K. J.C.
DRAWN BY J.C.
CHKD. BY J.C.
APPD. BY J.C.

PROJECT NAME

NORTHGATE TRANSFER CENTER

EL PASO, TEXAS

CITY OF EL PASO

CAPITAL IMPROVEMENT DEPARTMENT

THE CITY OF EL PASO TEXAS

SHEET TITLE

POST-TENSIONED GIRDER DETAILS

SHEET

SG003

hkn engineers
300 El Paso Street / El Paso, TX 79912
ph. (915) 833-7700 / fax (915) 833-9855
TBPE REG. # F-002109
www.hknengineers.com

100% CONSTRUCTION DOCUMENTS

POST-TENSIONED COCNRETE GIRDER / BEAM SCHEDULE NOTES:

1. REFER TO TYPICAL BEAM REINFORCEMENT AND BEAM POST-TENSIONING LAYOUT DETAILS 1 THROUGH 5/SG002 FOR DESCRIPTIONS OF SCHEDULE PARAMETERS.
2. "LEFT" & "RIGHT" ENDS OF BEAM CORRESPOND TO BEAM MARK ORIENTATION AS SHOWN ON PLAN. "LEFT" END OF BEAM REFERS TO THE LEFT SIDE OF MARK AS READ IN THE UPRIGHT POSITION.
3. STIRRUP SPACING APPLIES FROM EACH END OF BEAM U.N.O. STARTING FROM FACE OF SUPPORT. "REMAINING" REFERS TO REMAINDER OF BEAM SPAN.
4. WIDTH AND DEPTH ARE FORM DIMENSIONS. REQUIRED COVER MUST BE SUBTRACTED FOR COVER REQUIREMENTS.
5. EFFECTIVE FORCE IS THE FINAL POST-TENSIONING FORCES REQUIRED AFTER LOSSES DUE TO ANCHORAGE SET, STRAIN CREEP & FRICTION EFFECTS., ETC.
6. TENDON PROFILE DENOTES THE VERTICAL DIMENSION FROM BOTTOM OF GIRDER DEFINING THE CONTROL POINTS FOR THE CENTROID OF THE EFFECTIVE FORCE.
7. POST-TENSIONING TENDONS SHALL BE SHEATHED UNGROUTED 7-WIRE STRANDS. REFER TO DRAWING S0.0 FOR ADDITIONAL REQUIREMENT.
8. 2- #5 AT MID-DEPTH OF GIRDERS NOT SHOWN IN SCHEDULE.
9. MINIMUM DEPTH SHALL BE 24". DEPTH CHANGES DUE TO STEP IN THE TOP OF CONCRETE SHALL BE COORDINATED WITH ELEVATIONS NOTED ON FRAMING PLAN

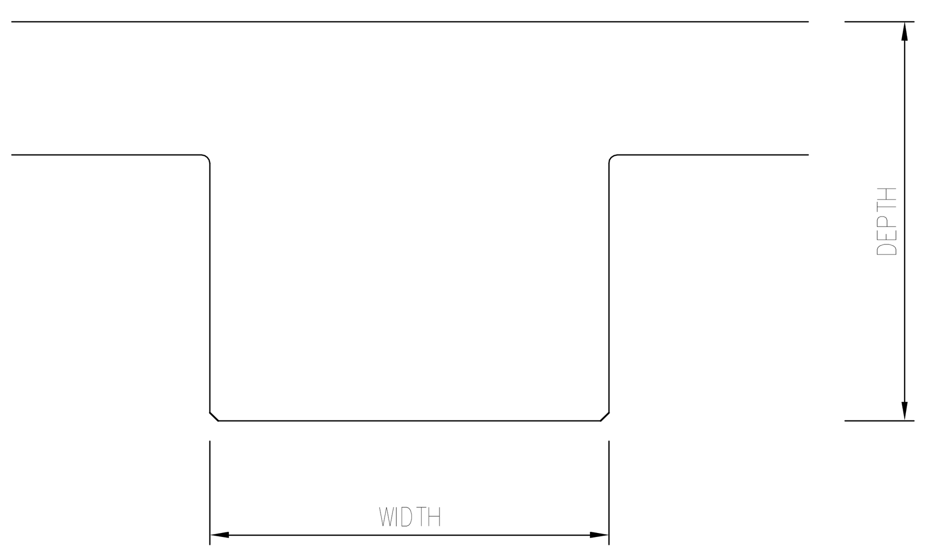

GIRDER / BEAM FORM

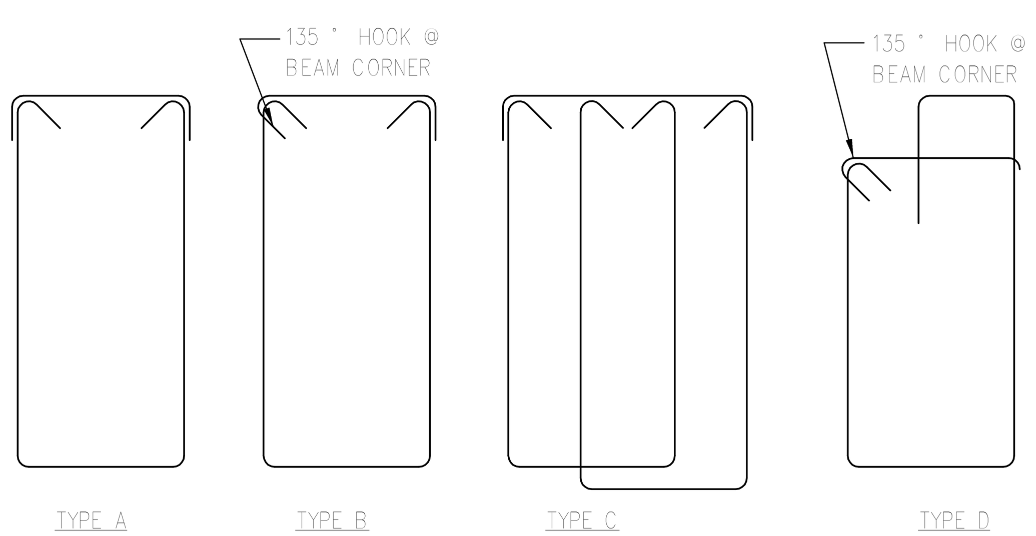

GIRDER / BEAM STIRRUPS

POST-TENSIONED CONCRETE BEAM/GIRDER SCHEDULE

MARK	SPAN	WIDTH (IN)	DEPTH (IN)	POST-TENSIONING PROFILE				LONGITUDINAL REINFORCEMENT BARS				STIRRUPS		NOTES
				EFF. FORCE	VERTICAL PLACEMENT LEFT	CENTER	RIGHT	PLACEMENT	NUMBER & SIZE	TYPE	SIZE	TYPE	SPACING	
PG1	37'-6"	18	36	280 K	21.9	10.00	34.25	TOP LEFT	2-#9	L	#4	A	LT: @ 2", REMAINING @ 18"	
								BOTTOM CENTER	2-#9	L			RT: @ 2", REMAINING @ 18"	
								TOP RIGHT	2-#9	L				
PG2	43'-10"	18	36	280 K	34.25	10.00	34.25	TOP LEFT	CONT.	L	#4	A	LT: @ 2", REMAINING @ 18"	
								BOTTOM CENTER	2-#9	L			RT: @ 2", REMAINING @ 18"	
								TOP RIGHT	2-#9	L				
PG3	53'-8"	18	36	280 K	34.25	4.00	23.0	TOP LEFT	CONT.	L	#4	A	LT: @ 2", REMAINING @ 18"	
								BOTTOM CENTER	2-#9	L			RT: @ 2", REMAINING @ 18"	
								TOP RIGHT	2-#9	L				
PG4	37'-6"	18	36	280 K	29.41	12.00	34.25	TOP LEFT	4-#9	L	#4	B	LT: @ 2", REMAINING @ 18"	
								BOTTOM CENTER	2-#9	L			RT: @ 2", REMAINING @ 18"	
								TOP RIGHT	4-#9	L				
PG5	43'-10"	18	36	280 K	34.25	12.00	34.25	TOP LEFT	CONT.	L	#4	B	LT: @ 2", REMAINING @ 18"	
								BOTTOM CENTER	2-#9	L			RT: @ 2", REMAINING @ 18"	
								TOP RIGHT	4-#9	L				
PG6	53'-8"	18	36	580 K	34.25	4.00	29.41	TOP LEFT	CONT.	L	#4	B	LT: @ 2", 10 @ 10", REMAINING @ 18"	
								BOTTOM CENTER	2-#9	L			RT: @ 2", 10 @ 10", REMAINING @ 18"	
								TOP RIGHT	4-#9	L				
PG7	37'-6"	18	36	380 K	29.41	15.00	34.25	TOP LEFT	4-#9	L	#4	B	LT: @ 2", REMAINING @ 18"	
								BOTTOM CENTER	2-#9	L			RT: @ 2", REMAINING @ 18"	
								TOP RIGHT	4-#9	L				
PG8	43'-10"	18	36	380 K	34.25	15.00	34.25	TOP LEFT	CONT.	L	#4	B	LT: @ 2", REMAINING @ 18"	
								BOTTOM CENTER	2-#9	L			RT: @ 2", REMAINING @ 18"	
								TOP RIGHT	4-#9	L				
PG9	28'-0"	18	36	380 K	34.25	18.00	29.41	TOP LEFT	CONT.	L	#4	B	LT: @ 2", REMAINING @ 18"	
								BOTTOM CENTER	2-#9	L			RT: @ 2", REMAINING @ 18"	
								TOP RIGHT	4-#9	L				
PG10	37'-6"	18	36	380 K	29.41	15.00	34.25	TOP LEFT	4-#9	L	#4	B	LT: @ 2", REMAINING @ 18"	
								BOTTOM CENTER	2-#9	L			RT: @ 2", REMAINING @ 18"	
								TOP RIGHT	4-#9	L				
PG11	43'-10"	18	36	380 K	34.25	15.00	34.25	TOP LEFT	CONT.	L	#4	B	LT: @ 2", REMAINING @ 18"	
								BOTTOM CENTER	2-#9	L			RT: @ 2", REMAINING @ 18"	
								TOP RIGHT	4-#9	L				
PG12	28'-0"	18	36	380 K	34.25	18.00	25.25	TOP LEFT	CONT.	L	#4	B	LT: @ 2", REMAINING @ 18"	
								BOTTOM CENTER	2-#9	L			RT: @ 2", REMAINING @ 18"	
								TOP RIGHT	4-#9	L				
PG13	25'-8"	18	36	380 K	34.25	27.00	29.41	TOP LEFT	CONT.	L	#4	B	LT: @ 2", REMAINING @ 18"	
								BOTTOM CENTER	2-#9	L			RT: @ 2", REMAINING @ 18"	
								TOP RIGHT	2-#9	L				
PG14	37'-6"	18	36	380 K	29.41	15.00	34.25	TOP LEFT	4-#9	L	#4	B	LT: @ 2", REMAINING @ 18"	
								BOTTOM CENTER	2-#9	L			RT: @ 2", REMAINING @ 18"	
								TOP RIGHT	4-#9	L				
PG15	43'-10"	18	36	380 K	34.25	15.00	34.25	TOP LEFT	CONT.	L	#4	B	LT: @ 2", REMAINING @ 18"	
								BOTTOM CENTER	2-#9	L			RT: @ 2", REMAINING @ 18"	
								TOP RIGHT	4-#9	L				
PG16	53'-8"	18	36	440 K	34.25	4.00	29.41	TOP LEFT	CONT.	L	#4	B	LT: @ 2", REMAINING @ 18"	
								BOTTOM CENTER	2-#9	L			RT: @ 2", REMAINING @ 18"	
								TOP RIGHT	4-#9	L				
PG17	37'-6"	18	36	380 K	29.41	15.00	34.25	TOP LEFT	4-#9	L	#4	B	LT: @ 2", REMAINING @ 18"	
								BOTTOM CENTER	2-#9	L			RT: @ 2", REMAINING @ 18"	
								TOP RIGHT	4-#9	L				
PG18	43'-10"	18	36	380 K	34.25	15.00	34.25	TOP LEFT	CONT.	L	#4	B	LT: @ 2", REMAINING @ 18"	
								BOTTOM CENTER	2-#9	L			RT: @ 2", REMAINING @ 18"	
								TOP RIGHT	4-#9	L				
PG19	53'-8"	18	36	410 K	34.25	5.50	29.41	TOP LEFT	CONT.	L	#4	B	LT: @ 2", REMAINING @ 18"	
								BOTTOM CENTER	2-#9	L			RT: @ 2", REMAINING @ 18"	
								TOP RIGHT	4-#9	L				
PG20	37'-6"	18	36	150 K	21.9	4.00	34.25	TOP LEFT	4-#9	L	#4	A	LT: @ 2", REMAINING @ 18"	
								BOTTOM CENTER	2-#9	L			RT: @ 2", REMAINING @ 18"	
								TOP RIGHT	2-#9	L				
PG21	43'-10"	18	36	150 K	34.25	4.00	34.25	TOP LEFT	CONT.	L	#4	A	LT: @ 2", REMAINING @ 18"	
								BOTTOM CENTER	2-#9	L			RT: @ 2", REMAINING @ 18"	
								TOP RIGHT	2-#9	L				
PG22	53'-8"	18	36	150 K	34.25	4.00	23.00	TOP LEFT	CONT.	L	#4	A	LT: @ 2", REMAINING @ 18"	
								BOTTOM CENTER	2-#9	L			RT: @ 2", REMAINING @ 18"	
								TOP RIGHT	2-#9	L				

1 SG004 POST-TENSIONED CONCRETE GIRDER SCHEDULE

100% CONSTRUCTION DOCUMENTS

hkn engineers
3825 Oro Drive / El Paso, Tx. 79912 FIRM REG. # F-000209
ph. (915) 833-2100 / fax (915) 833-3855 www.hknengineers.com

REFERENCES – BENCHMARKS

REVISIONS DATE BY

ENGINEER SEAL

STATE OF TEXAS JAVIER M. CARLIN 89231 LICENSED PROFESSIONAL ENGINEER 03/03/16

SCALE HOR: SHOWN VER: SHOWN

DATE DESIGN BY V.L.E.R. J.C. DRAWN BY E.O. CHKD. BY J.C. APPD. BY J.C.

PROJECT NAME

NORTHGATE TRANSFER CENTER

EL PASO, TEXAS

CITY OF EL PASO

CAPITAL IMPROVEMENT DEPARTMENT

THE CITY OF EL PASO TEXAS

SHEET TITLE

POST-TENSIONED GIRDER SCHEDULE

SHEET

SG004

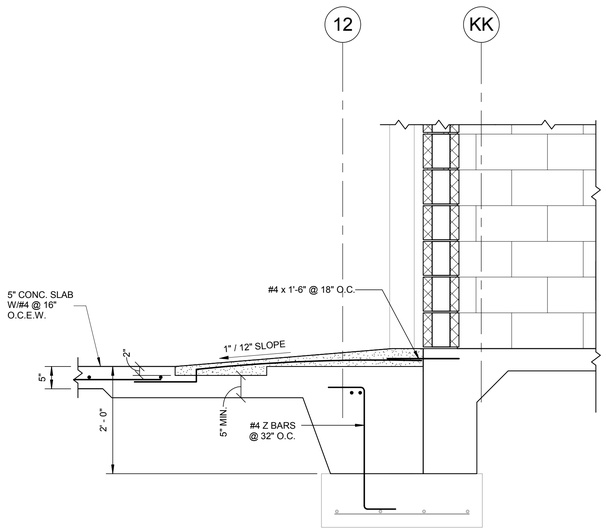

1 SG005 RAMP DETAIL
SC: 3/4" = 1'-0"

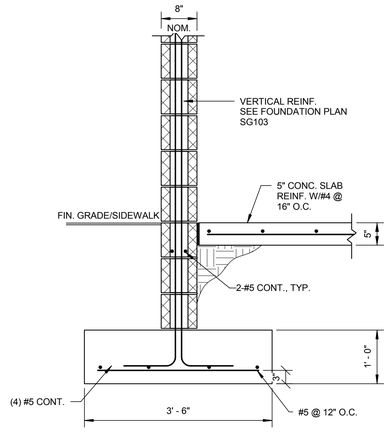

2 SG005 DETAIL
SC: 3/4" = 1'-0"

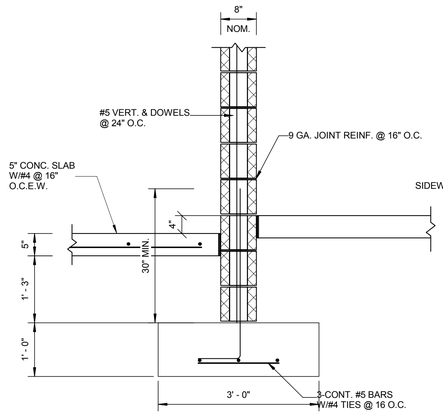

3 SG005 DETAIL
SC: 3/4" = 1'-0"

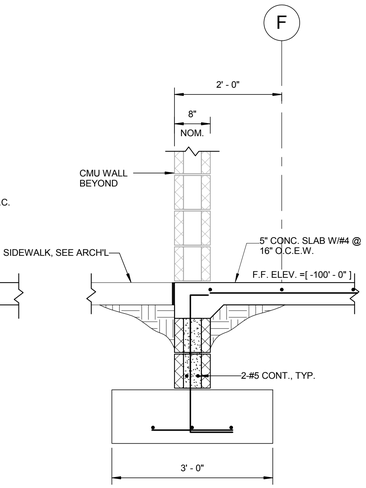

4 SG005 DETAIL
SC: 3/4" = 1'-0"

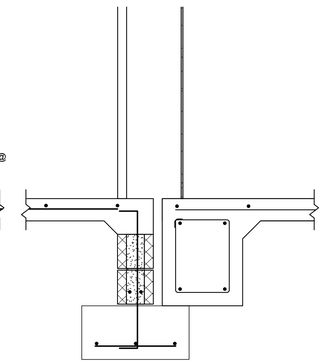

5 SG005 DETAIL
SC: 3/4" = 1'-0"

WALL CORNER
SC: 3/4" = 1' - 0"

WALL INTERS.
SC: 3/4" = 1' - 0"

8" WALL END
SC: 3/4" = 1' - 0"

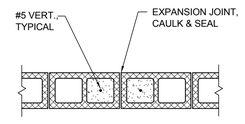

8" WALL CONTROL JT
SC: 3/4" = 1' - 0"

CMU LINTEL SCHEDULE					
LINTEL MARK	D, FT-IN	"N" BARS	"T" TIES	SPAN [5]	CONDITION
M1	1'-4"	4-#5	#3 @ 8" O.C.	0' TO 3'-4"	NON-BRG & EXT. BRG WALLS
M2	2'-0"	6-#5	#3 @ 10" O.C.	3'-4" TO 6'-0"	INTERIOR & EXT. BRG WALLS
M3	2'-8"	8-#5	#3 @ 8" O.C.	6'-0" TO 12'-0"	INTERIOR & EXT. BRG WALLS POINT LOADS

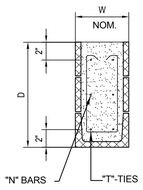

NOTES:

1. EXTEND HOR. REINF. BARS "D - 4 IN" PAST OPENING EA. SIDE
2. PROVIDE JAMB EA. END OF LINTEL SAME SIZE "D" AS LINTEL
3. VERTICAL JAMB REINFORCEMENT SHALL BE DOWELED AT FOUNDATION LEVEL AND EXTEND TO TOP OF WALL
4. "W" DIMENSION TO MATCH WIDTH OF WALL
5. U.N.O. THIS SCHEDULE IS APPLICABLE TO AND TYPICAL FOR ALL UNLABELED LINTELS ON DRAWINGS.

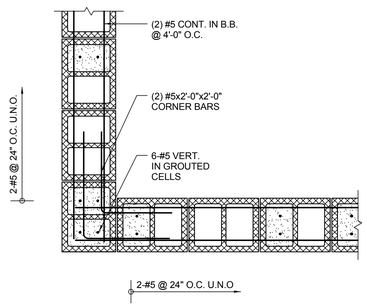

12" WALL CORNER
SC: 3/4" = 1' - 0"

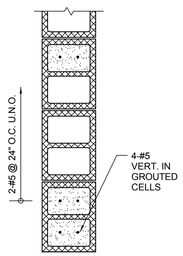

12" WALL END
SC: 3/4" = 1' - 0"

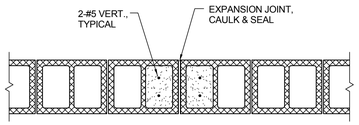

12" WALL CONTROL JT
SC: 3/4" = 1' - 0"

100% CONSTRUCTION DOCUMENTS

hkn engineers
3009 N. Oregon Drive / El Paso, TX 79902
ph: (915) 532-2100 / fax: (915) 532-3855
Texas REG. # F-000339
www.hknengineers.com

REFERENCES – BENCHMARKS

BY	REVISIONS	DATE

ENGINEER SEAL
STATE OF TEXAS
JAVIER M. CARLIN
89231
LICENSED PROFESSIONAL ENGINEER
03/03/16

SCALE
HOR. SHOWN
VER. SHOWN

DATE 03/03/16
DESIGN BY V.L.E.K. J.C.
DRAWN BY C.G. J.C.
CHKD. BY J.C.
APPD. BY J.C.

PROJECT NAME
NORTHGATE TRANSFER CENTER
EL PASO, TEXAS

CITY OF EL PASO
CAPITAL IMPROVEMENT DEPARTMENT

SHEET TITLE
TYPICAL MASONRY DETAILS

SHEET
SG005

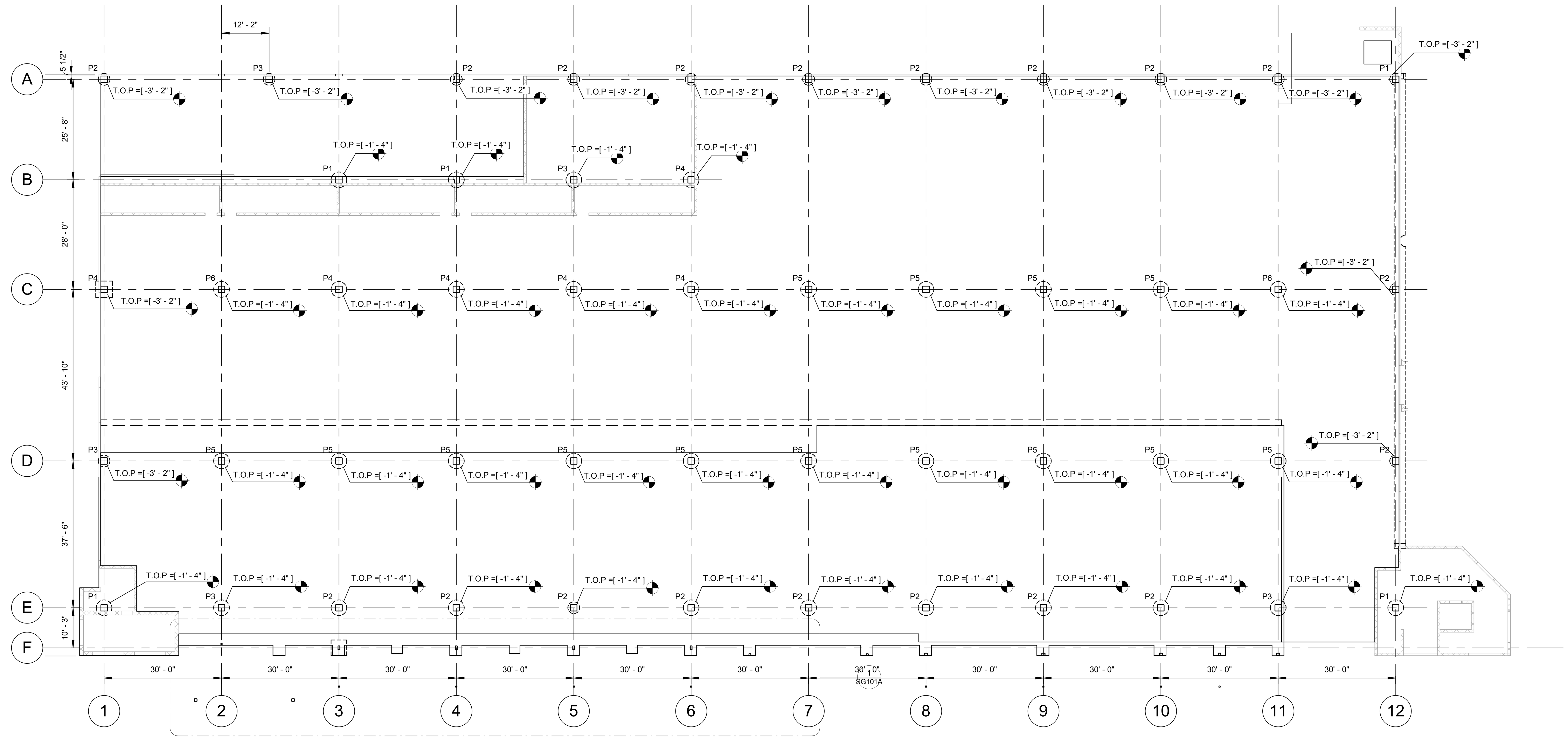

1 SG100 **DRILLED PIER PLAN**
SC: 1/16" = 1'-0"

GARAGE

100% CONSTRUCTION DOCUMENTS

hkn engineers
3825 Driv Drive / El Paso, Tx 79912 FIRM REG. # F-002238
ph. (915) 833-2100 / fax (915) 833-3855 www.hknengineers.com

REFERENCES -- BENCHMARKS

REVISIONS | DATE | BY

ENGINEER SEAL
STATE OF TEXAS
JAVIER M. CARLIN
89231
PROFESSIONAL ENGINEER
03/03/16

SCALE
HOR: SHOWN
VER: SHOWN
DATE: 2016
DESIGN BY: V.I., E.R., J.C.
DRAWN BY: E.G.
CHKD. BY: J.C.
APPD. BY: J.C.

PROJECT NAME
NORTHGATE TRANSFER CENTER
EL PASO, TEXAS

CITY OF EL PASO
CAPITAL IMPROVEMENT DEPARTMENT

THE CITY OF EL PASO TEXAS

SHEET TITLE
DRILLED PIER PLAN

SHEET
SG100

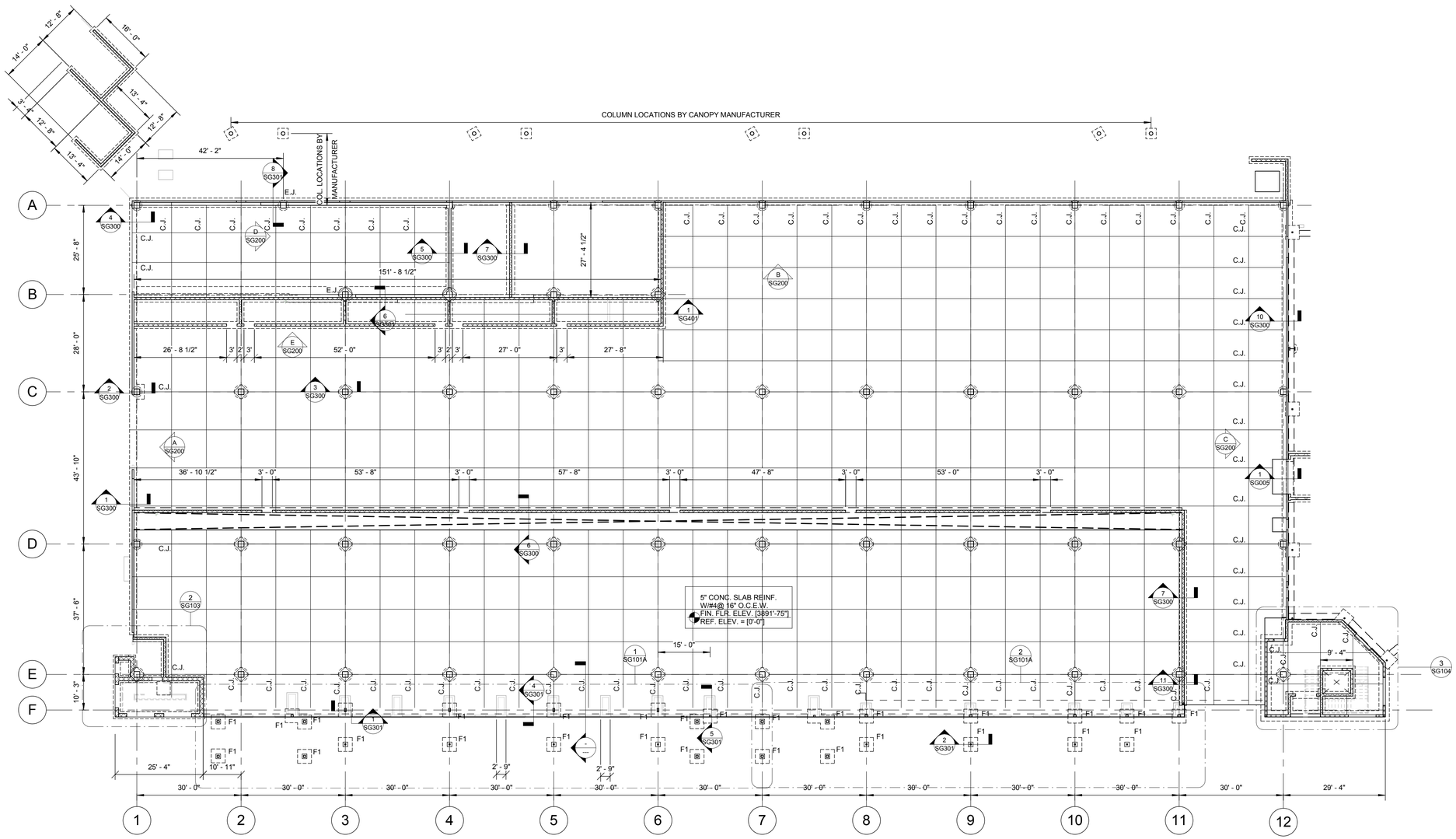

1 SG101 PARKING GARAGE LEVEL 1 AND FOUNDATION PLAN

SC: 1/16" = 1'-0"

GARAGE

100% CONSTRUCTION DOCUMENTS

hkn engineers
3800 North Lamar / El Paso, TX 79902
p/a (915) 833-7700 / fax (915) 833-9855 TBPE REG. # F-000239 www.hknengineers.com

REFERENCES – BENCHMARKS

DATE	REVISIONS	BY

ENGINEER SEAL
STATE OF TEXAS
JAVIER M. CARLIN
89231
LICENSED PROFESSIONAL ENGINEER
03/03/16

SCALE
HOR. SHOWN
VER. SHOWN

DATE 03/03/16
DESIGN BY V.L.E.K. J.C.
DRAWN BY E.C.
CHKD. BY J.C.
APPD. BY J.C.

PROJECT NAME
NORTHGATE TRANSFER CENTER
EL PASO, TEXAS

CITY OF EL PASO
CAPITAL IMPROVEMENT DEPARTMENT

SHEET TITLE
PARKING GARAGE LEVEL 1 AND FOUNDATION PLAN

SHEET
SG101

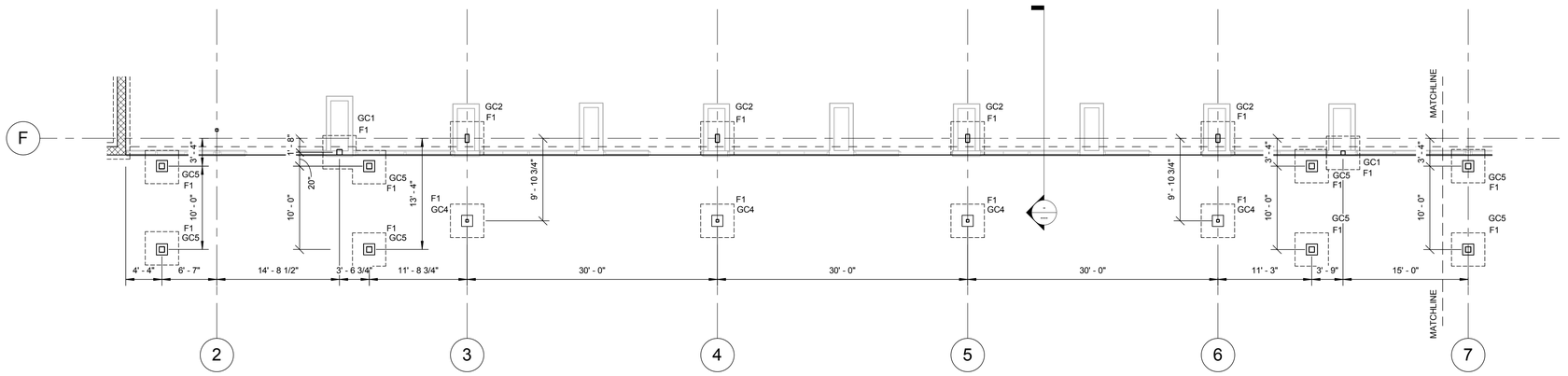

1 SG101A FOUNDATION PLAN DIMENSIONS

SC: 1/8" = 1'-0"

RETAIL

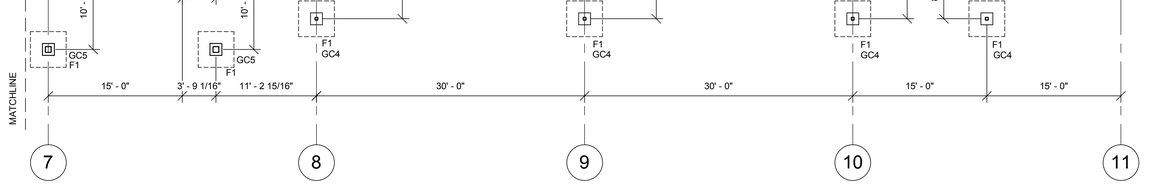

2 SG101A FOUNDATION PLAN DIMENSIONS

SC: 1/8" = 1'-0"

RETAIL

COLUMN SCHEDULE

MARK	SIZE	BASE PLATE	ANCHOR BOLTS
GC1	HSS 6X6X1/4	PL 12X12X3/4	4 - 3/4 DIA.
GC2	HSS 12X6X3/8	PL 18X12X3/4	4 - 3/4 DIA.
GC3	HSS 10X8X5/8	PL 16X14X3/4	4 - 3/4 DIA.
GC4	HSS 4X4X1/4	PL 10X10X3/4	4 - 3/4 DIA.
GC5	HSS8X8X1/4	PL 14X14X3/4	4 - 3/4 DIA.

3 SG101A RETAIL COLUMN SCHEDULE

SC: 3/4" = 1'-0"

100% CONSTRUCTION DOCUMENTS

hkn engineers
3800 Rio Drive / El Paso, TX 79902
ph (915) 532-1700 / fax (915) 532-1855
TBPE REG. # F-000209
www.hknengineers.com

REFERENCES – BENCHMARKS

BY	REVISIONS	DATE

ENGINEER SEAL

STATE OF TEXAS
JAVIER M. CARLIN
89231
LICENSED PROFESSIONAL ENGINEER
03/03/16

SCALE	
HOR.	SHOWN
VER.	SHOWN

DATE	03/03/16
DESIGN BY	V.L.E.K. J.C.
DRAWN BY	C.G.
CHKD. BY	J.C.
APPD. BY	J.C.

PROJECT NAME

NORTHGATE TRANSFER CENTER

EL PASO, TEXAS

CITY OF EL PASO
CAPITAL IMPROVEMENT DEPARTMENT

SHEET TITLE

FOUNDATION PLAN DIMENSIONS

SHEET

SG101A

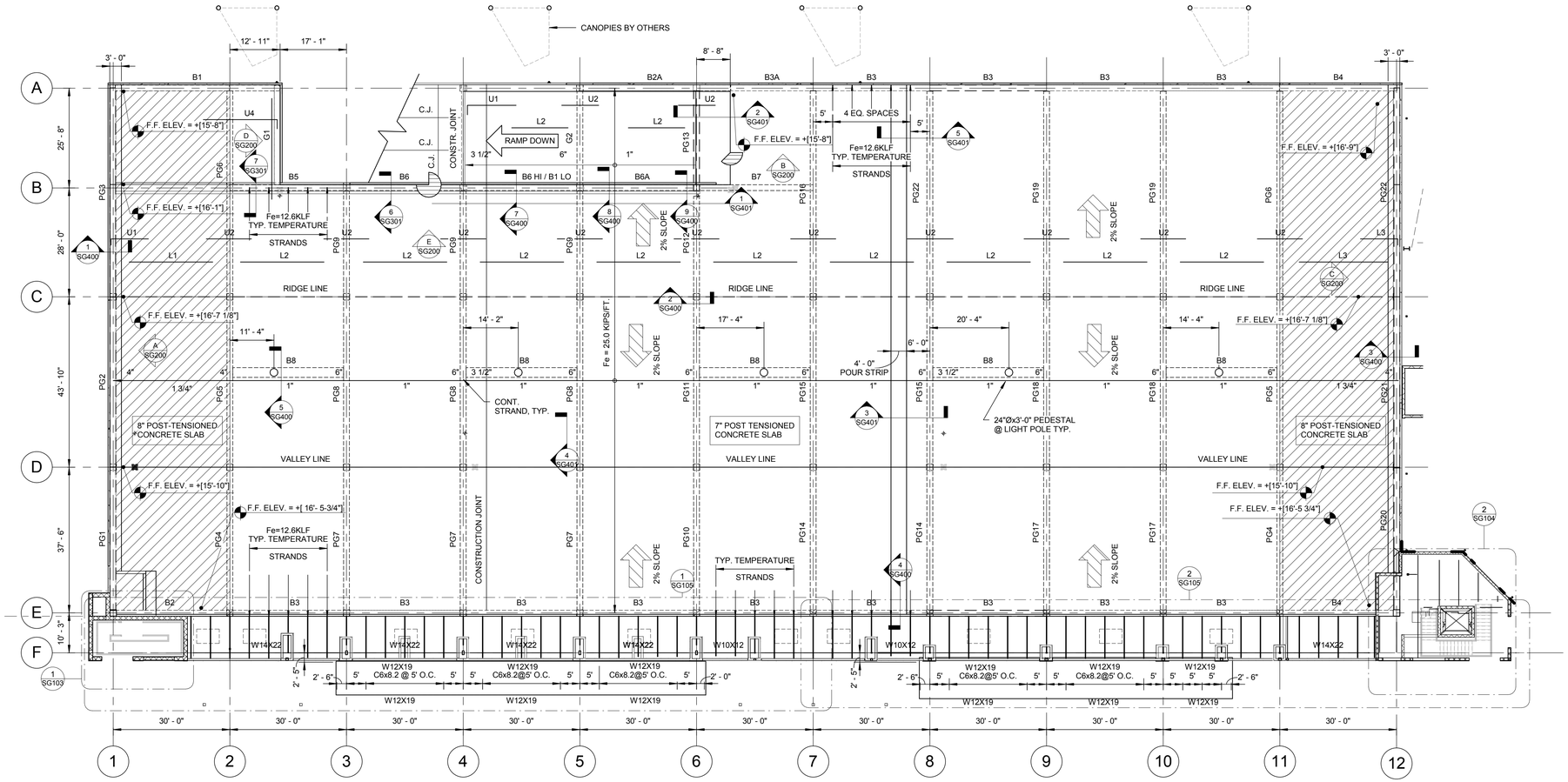

1 SG102 PARKING GARAGE LEVEL 2 FRAMING PLAN

SC: 1/16" = 1'-0"

GARAGE

SLAB REINFORCEMENT SCHEDULE			
MARK	LENGTH	LONGITUDINAL REINFORCEMENT BARS	
		PLACEMENT	SIZE & SPACING
U1	5'-0"	TOP LEFT	#5 @18"
U2	10'-0"	TOP	#5 @18"
U3	5'-0"	TOP RIGHT	#5 @18"
U4	17'-0"	TOP RIGHT	#5 @18"
L1	27'-0"	BOTTOM CENTER	#5 @18"
L2	18'-0"	BOTTOM CENTER	#5 @18"
L3	27'-0"	BOTTOM CENTER	#5 @18"

100% CONSTRUCTION DOCUMENTS

hkm engineers
3800 N. Mesa Drive / El Paso, TX 79902
ph (915) 532-1700 / fax (915) 532-1855
TBPE REG. # F-001209
www.hkmengineers.com

REFERENCES – BENCHMARKS

BY	REVISIONS	DATE

ENGINEER SEAL

STATE OF TEXAS
JAVIER M. CARLIN
98231
LICENSED PROFESSIONAL ENGINEER
03/03/16

SCALE	
HOR.	SHOWN
VER.	SHOWN

DATE	03/03/16
DESIGN BY	V.L/ E.S. / J.C.
DRAWN BY	E.S.
CHKD. BY	J.C.
APPD. BY	J.C.

PROJECT NAME

NORTHGATE TRANSFER CENTER

EL PASO, TEXAS

CITY OF EL PASO

CAPITAL IMPROVEMENT DEPARTMENT

THE CITY OF EL PASO TEXAS

SHEET TITLE

PARGING GARAGE LEVEL 2 - FRAMING PLAN

SHEET

SG102

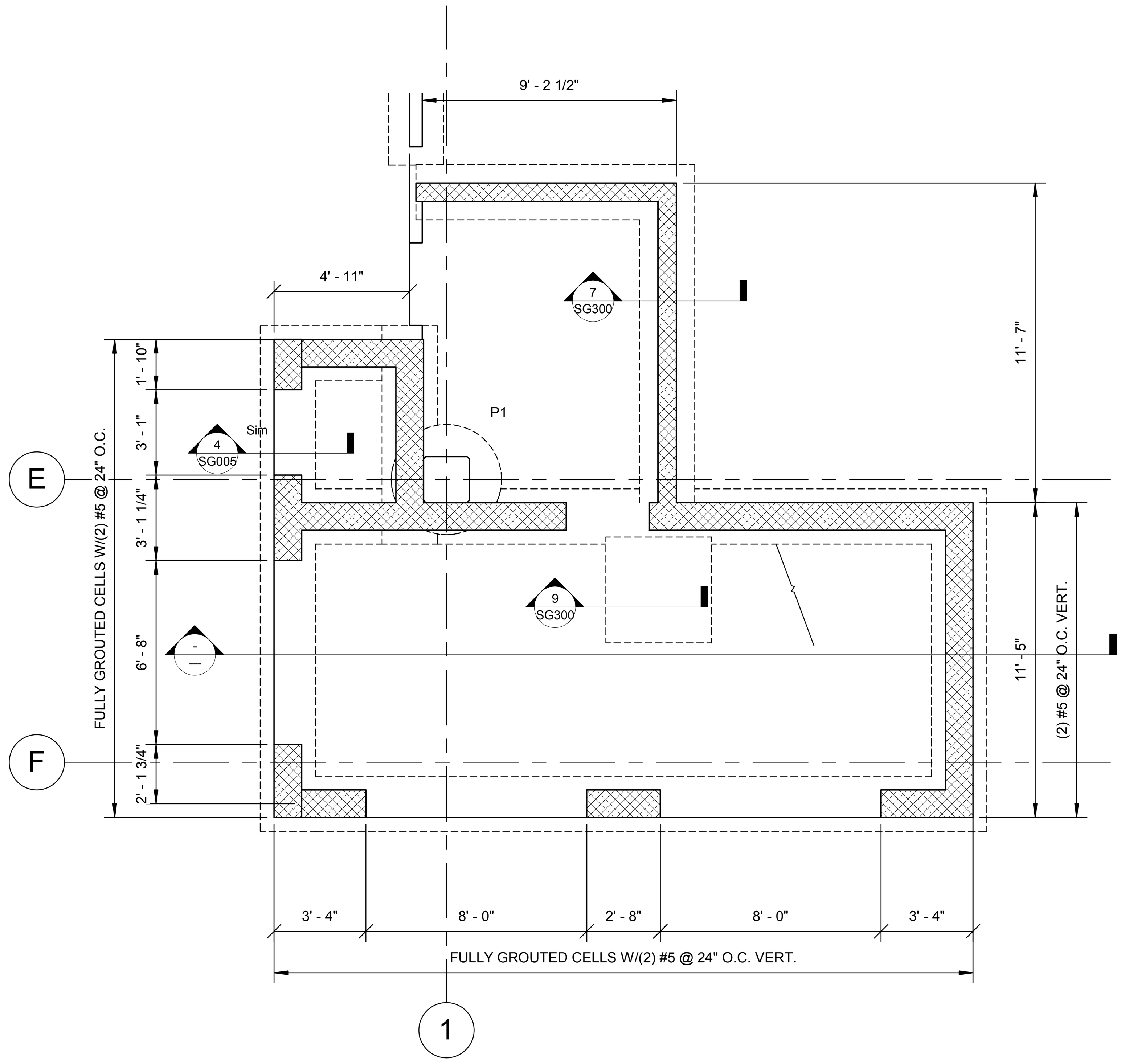

WEST TOWER FOUNDATION PLAN
2 / SG103
SC: 1/4" = 1'-0"

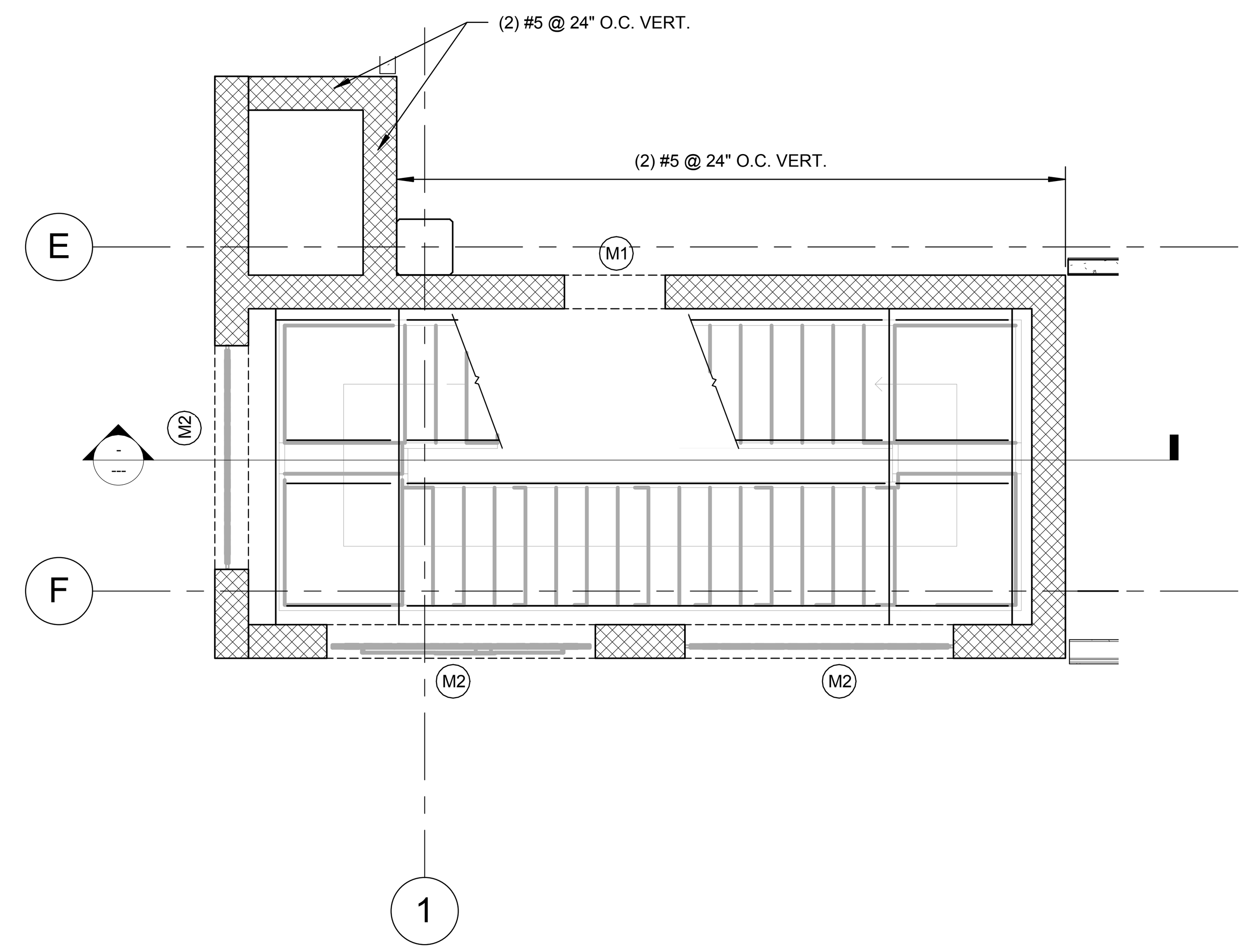

WEST TOWER FLOOR FRAMING
1 / SG103
SC: 1/4" = 1'-0"

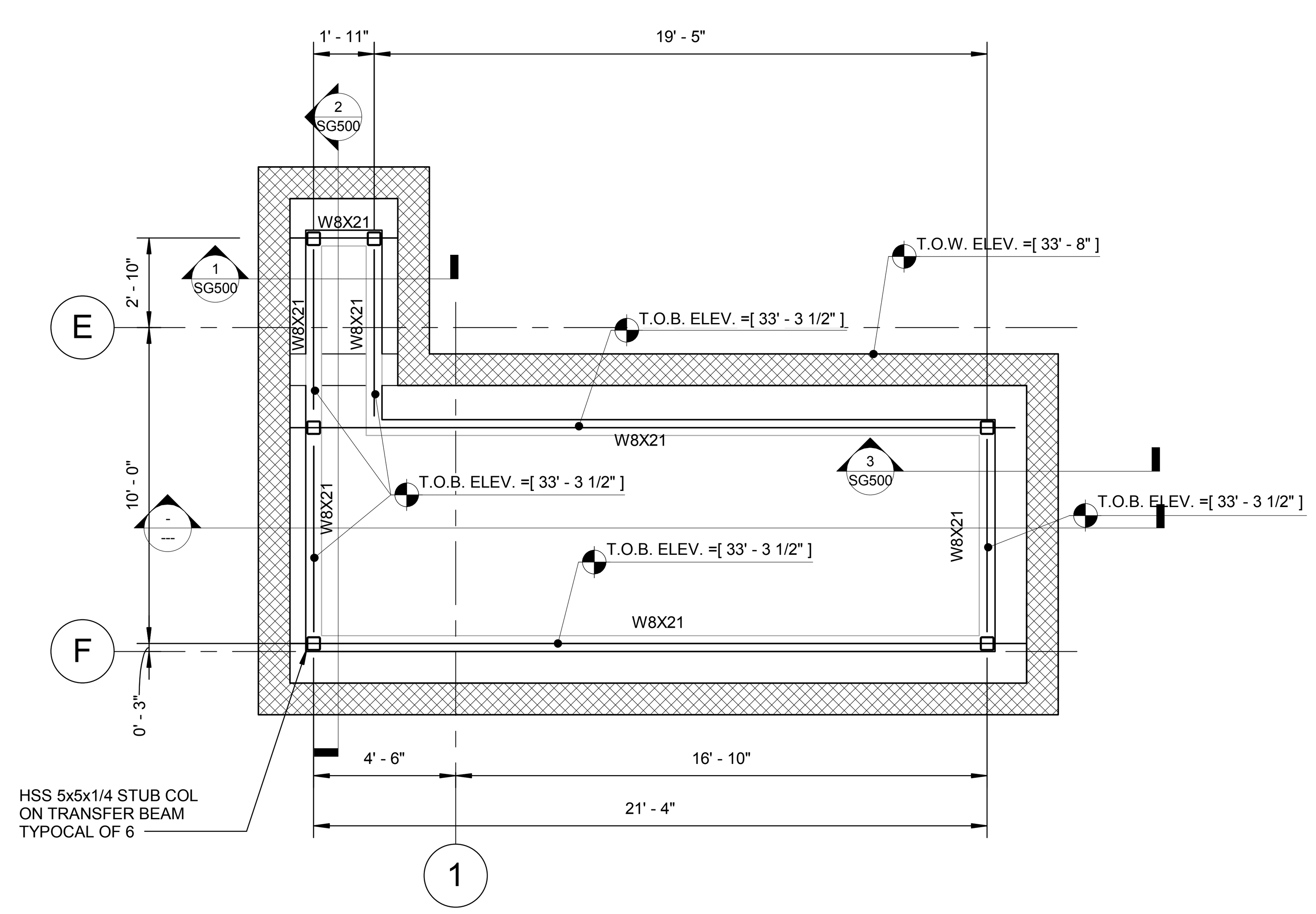

WEST TOWER MID ROOF
6 / SG103
SC: 1/4" = 1'-0"

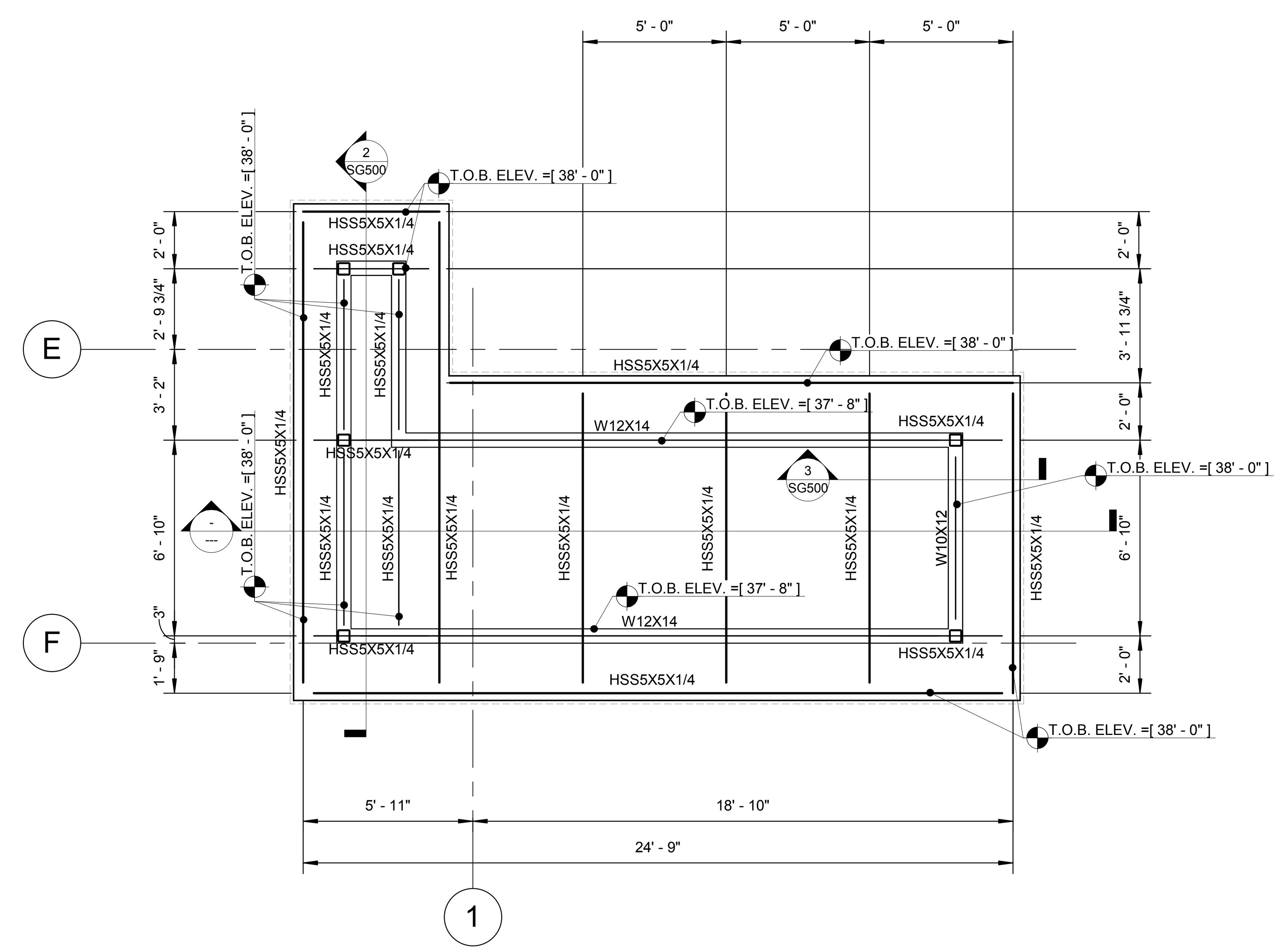

WEST TOWER ROOF FRAMING PLAN
7 / SG103
SC: 1/4" = 1'-0"

hkn engineers
5825 Onix Drive / El Paso, Tx 79912 FIRM REG. # F-002236
ph. (915) 833-2100 / fax (915) 833-3855 www.hknengineers.com

100% CONSTRUCTION DOCUMENTS

REFERENCES -- BENCHMARKS

DATE	REVISIONS	BY

ENGINEER SEAL
STATE OF TEXAS
JAVIER M. CARLIN
89231
PROFESSIONAL ENGINEER
03/03/16

SCALE	
HOR:	SHOWN
VER:	SHOWN

DATE	
DESIGN BY	V.I., E.R., J.C.
DRAWN BY	E.O.
CHKD. BY	J.C.
APPD. BY	J.C.

PROJECT NAME
NORTHGATE TRANSFER CENTER
EL PASO, TEXAS

CITY OF EL PASO
CAPITAL IMPROVEMENT DEPARTMENT

THE CITY OF EL PASO TEXAS

SHEET TITLE
WEST TOWER FRAMING PLANS

SHEET
SG103

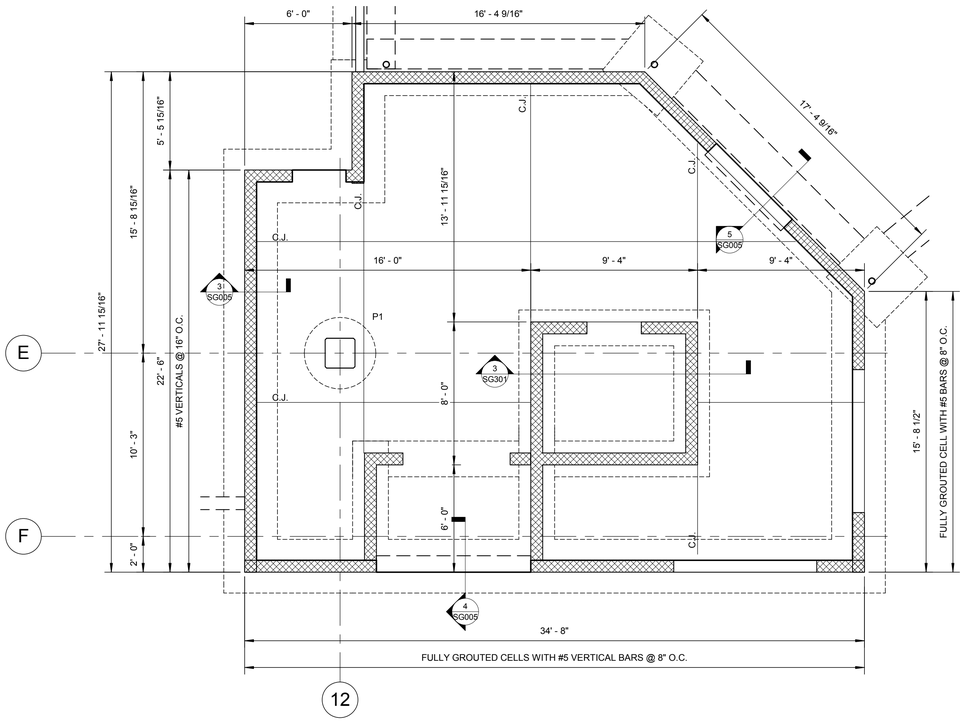

3 SG104 EAST TOWER FOUNDATION PLAN
SC: 1/4" = 1'-0"

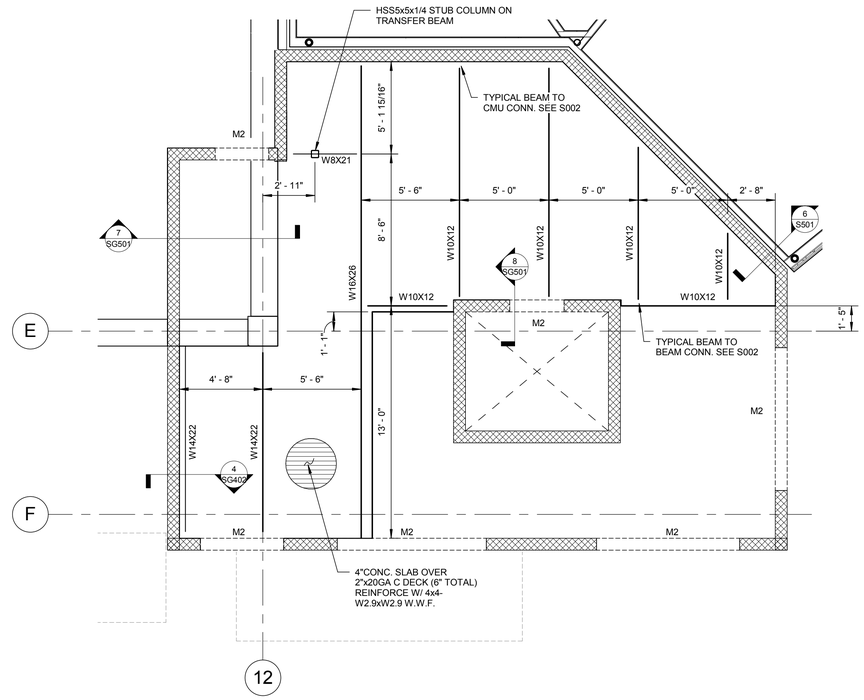

2 SG104 LEVEL 2 FLOOR FRAMING-EAST TOWER
SC: 1/4" = 1'-0"

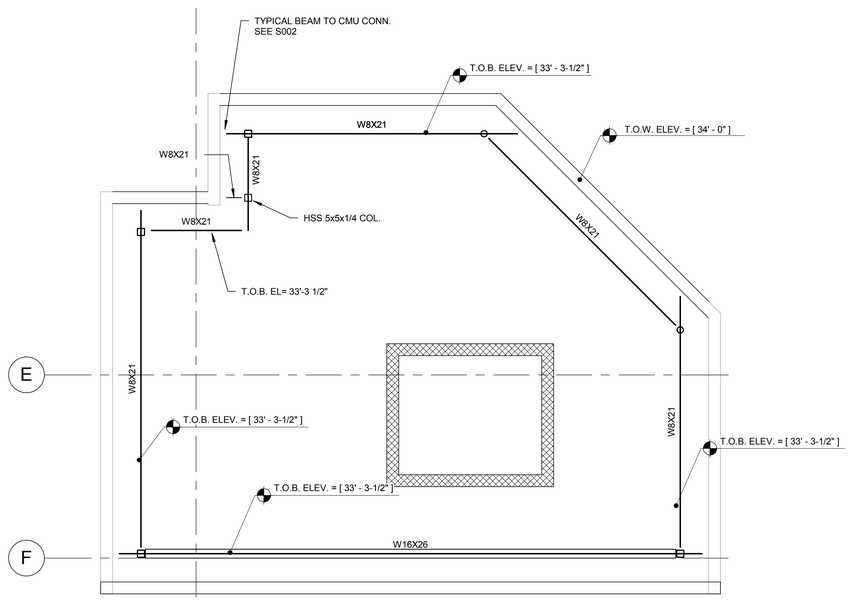

1 SG104 EAST TOWER MID ROOF
SC: 1/4" = 1'-0"

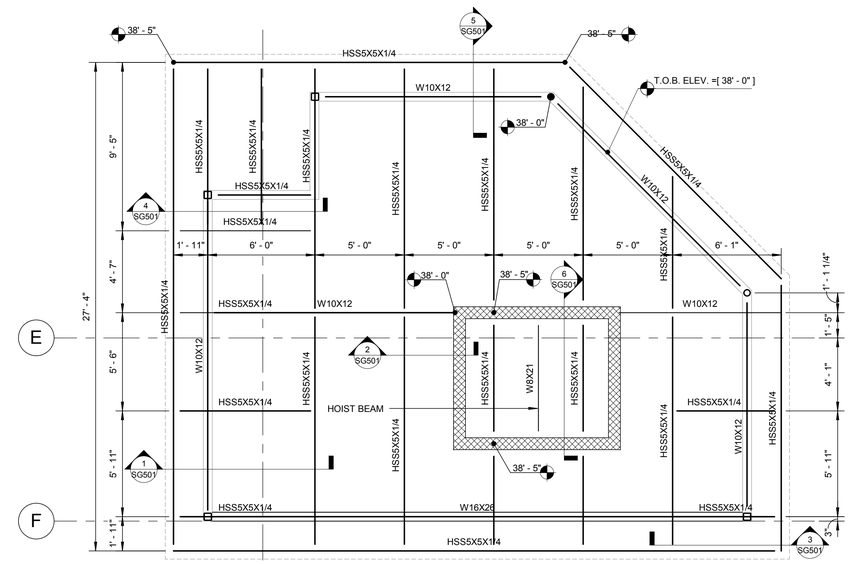

4 SG104 EAST TOWER ROOF FRAMING
SC: 1/4" = 1'-0"

100% CONSTRUCTION DOCUMENTS

hkn engineers
3825 Dyer Drive / El Paso, TX 79922
ph: (915) 833-2080 / fax: (915) 833-3855
TBPE REG. # F-002239
www.hknengineers.com

REFERENCES – BENCHMARKS

BY	REVISIONS	DATE

ENGINEER SEAL
STATE OF TEXAS
JAVIER M. CARLIN
89231
LICENSED PROFESSIONAL ENGINEER
03/03/16

SCALE
HOR: SHOWN
VER: SHOWN

DATE 03/03/16
DESIGN BY V.I. E.K. J.C.
DRAWN BY E.G. J.C.
CHKD. BY J.C.
APPD. BY J.C.

PROJECT NAME
NORTHGATE TRANSFER CENTER
EL PASO, TEXAS

CITY OF EL PASO
CAPITAL IMPROVEMENT DEPARTMENT

SHEET TITLE
EAST TOWER FRAMING PLANS

SHEET
SG104

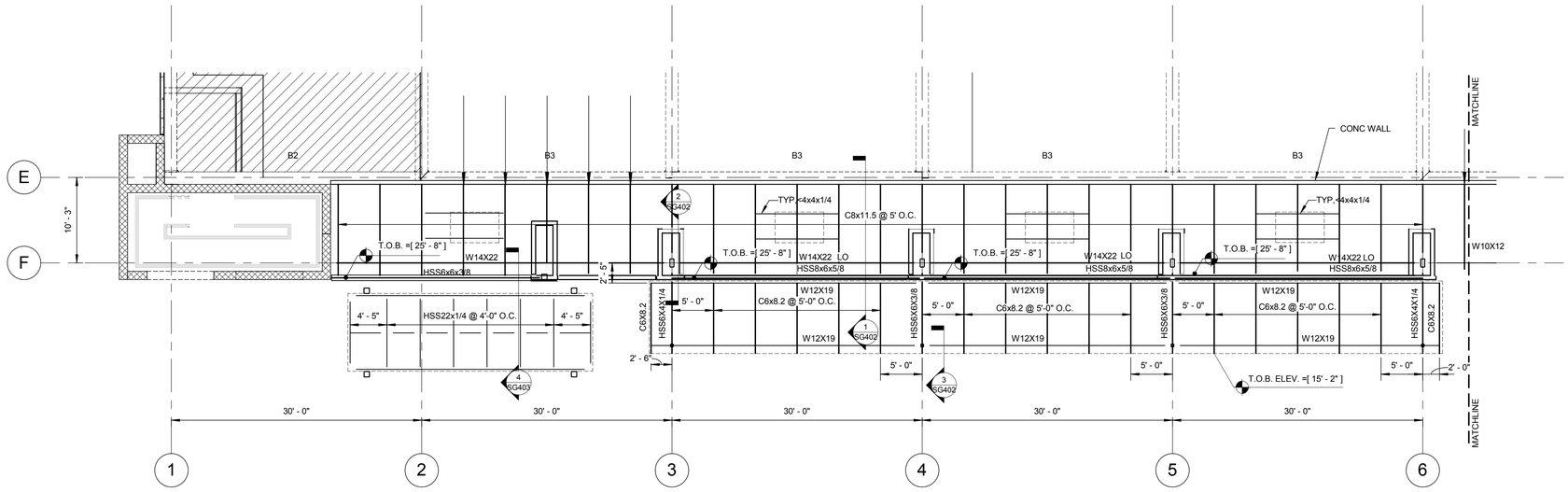

1 SG105 RETAIL FRAMING PLAN 1

SC: 1/8" = 1'-0"

RETAIL

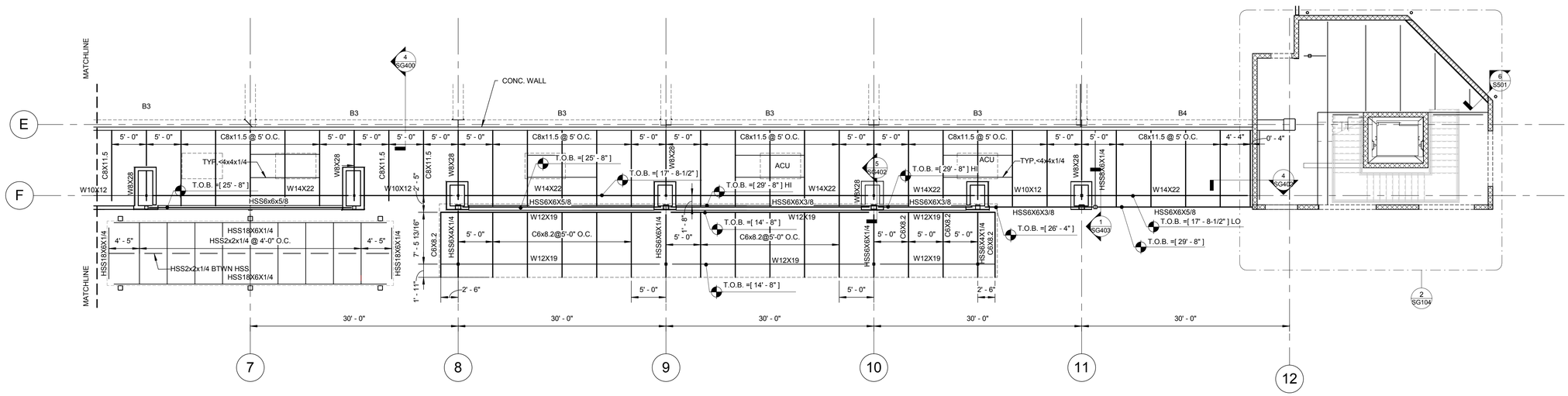

2 SG105 RETAIL FRAMING PLAN 2

SC: 1/8" = 1'-0"

RETAIL

100% CONSTRUCTION DOCUMENTS

hkn engineers
3800 North Lamar / El Paso, TX 79902
p/a (915) 833-7700 / fax (915) 833-9855
TBPE REG. # F-002039
www.hknengineers.com

REFERENCES – BENCHMARKS

DATE	REVISIONS	BY

ENGINEER SEAL

STATE OF TEXAS
JAVIER M. CARLIN
89231
LICENSED PROFESSIONAL ENGINEER
03/03/16

SCALE
HOR: SHOWN
VER: SHOWN

DATE 03/03/16
DESIGN BY V.L.E.K. J.C.
DRAWN BY C.G. J.C.
CHKD. BY J.C.
APPD. BY J.C.

PROJECT NAME

NORTHGATE TRANSFER CENTER

EL PASO, TEXAS

CITY OF EL PASO
CAPITAL IMPROVEMENT DEPARTMENT

SHEET TITLE

ENLARGED PLANS

SHEET
SG105

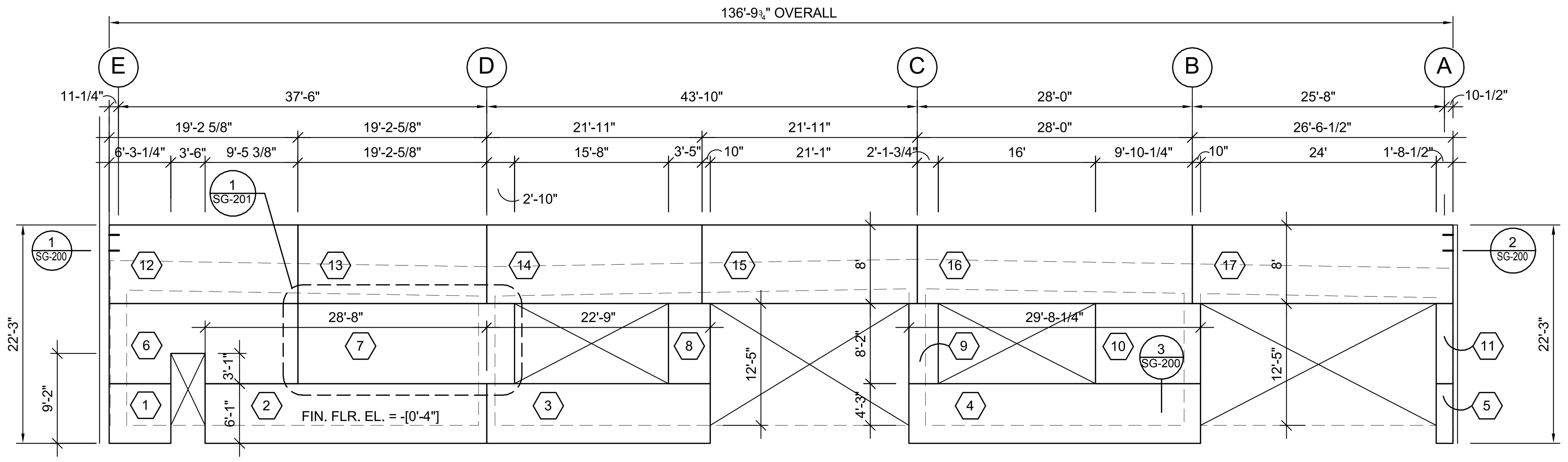

WALL ELEVATION "A"

SC: 3/32" = 1'-0" 5-1/2" PANELS

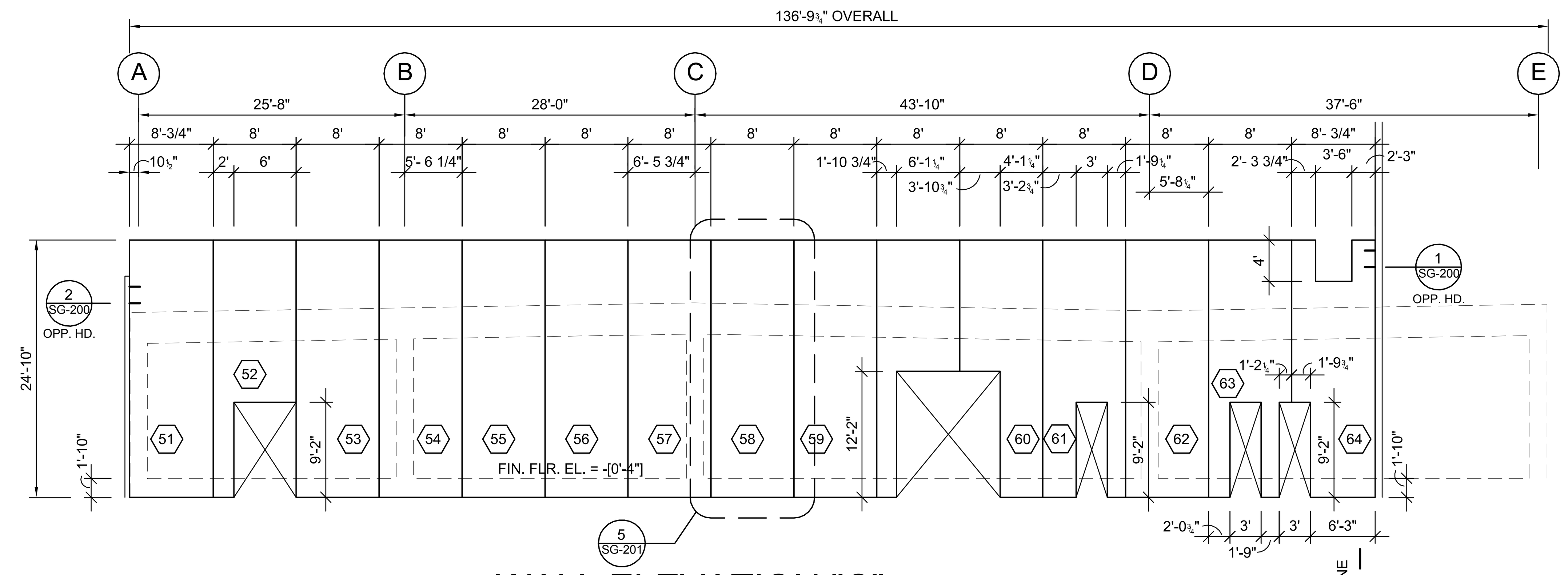

WALL ELEVATION "C"

SC: 3/32" = 1'-0" 5-1/2" PANELS

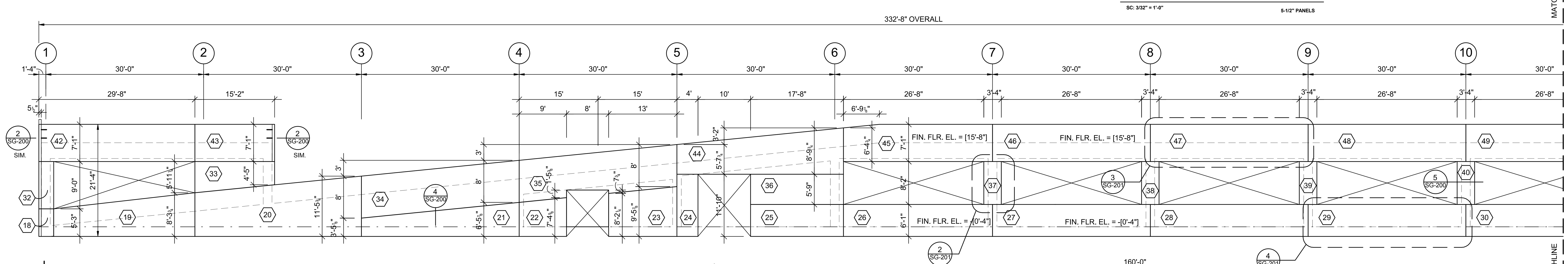

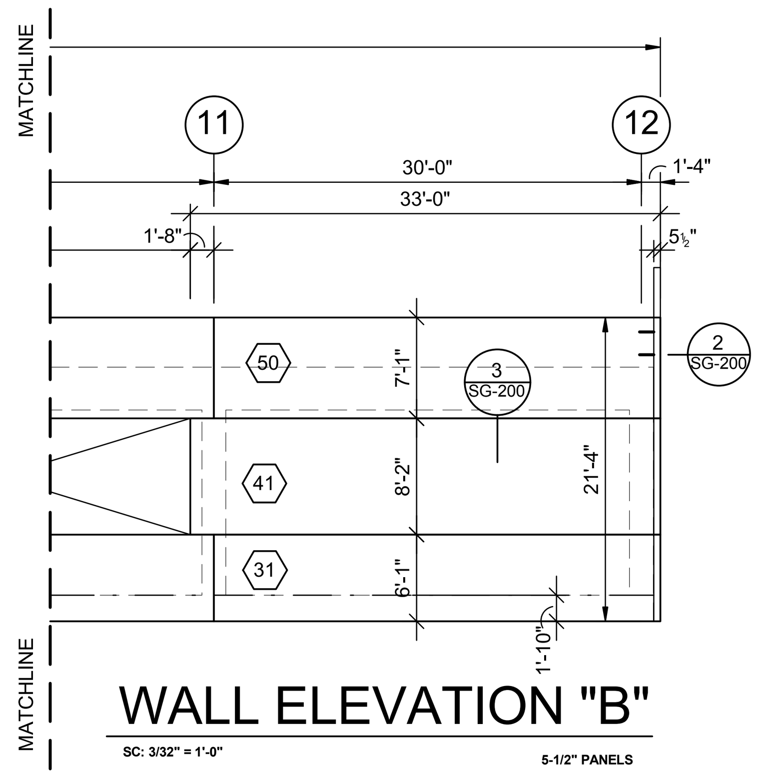

WALL ELEVATION "B"

SC: 3/32" = 1'-0" 5-1/2" PANELS

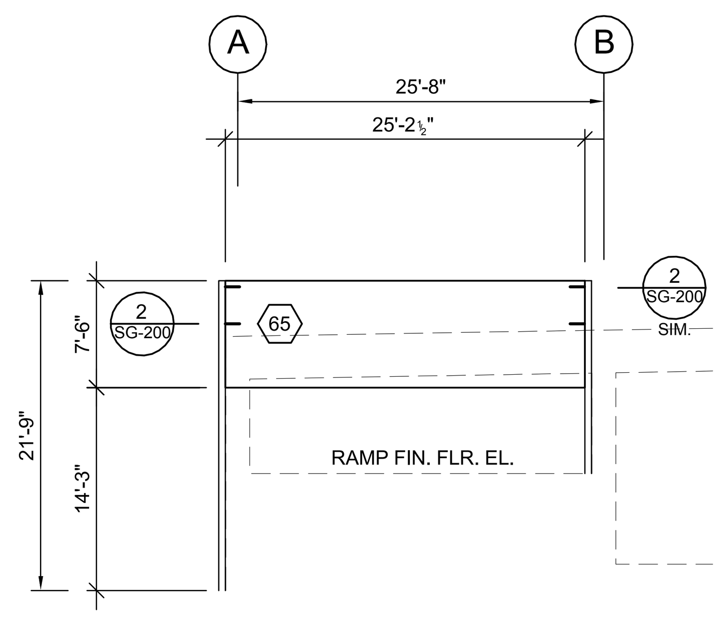

WALL ELEVATION "D"

SC: 3/32" = 1'-0" 5-1/2" PANELS

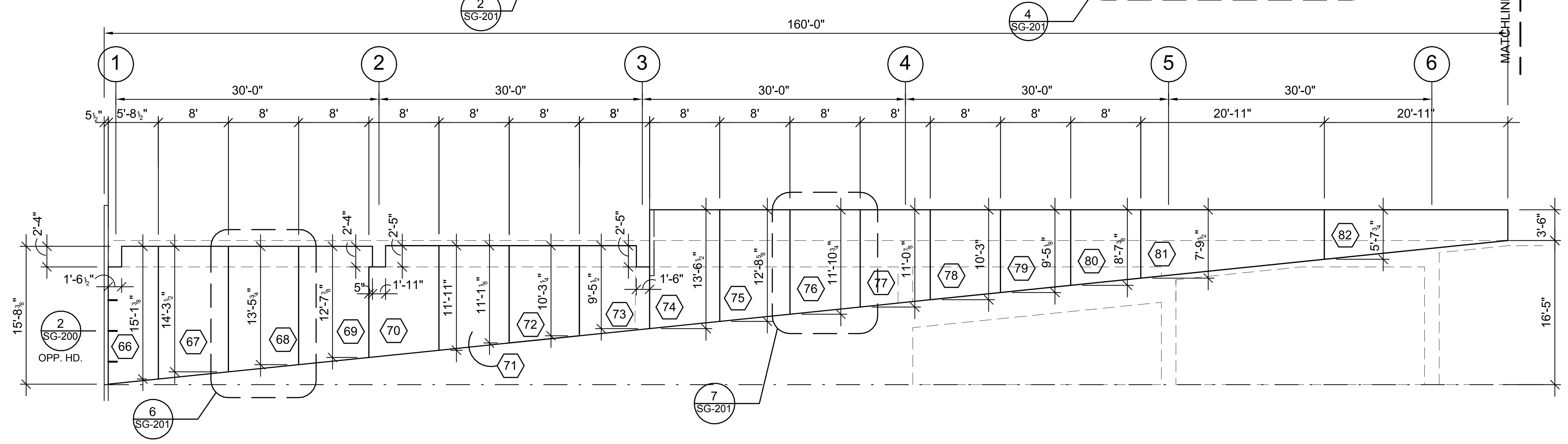

WALL ELEVATION "E"

SC: 3/32" = 1'-0" 5-1/2" PANELS

PRECAST CONCRETE WALL PANEL NOTES :

1. CONTRACTOR SHALL VERIFY ALL DIMENSIONS AND LOCATIONS OF OPENINGS BEFORE CASTING WALL PANELS.
2. ALL PANEL ELEVATION DIMENSIONS SHOWN ARE NOMINAL, INCLUDING 1" EXPANSION JOINTS BETWEEN PANELS.
3. REFER TO ARCHITECTURAL DRAWINGS FOR REVEALS, ACCENT STRIPS AND FINISHES NOT SHOWN ON STRUCTURAL DRAWINGS.
4. REFER TO ARCHITECTURAL DRAWINGS FOR ADDITIONAL EMBEDDED PLATES AND ANGLES REQUIRED AT DOOR OPENINGS.
5. P/C WALL PANELS ARE DESIGNED FOR IN-PLACE LOADS. CONTRACTOR SHALL VERIFY LIFTING STRESSES AND PROVIDE ADDITIONAL REINFORCEMENT WHERE NEEDED FOR LIFTING.
6. DO NOT ERECT P/C WALL PANELS UNTIL CONCRETE STRENGTH REQUIRED FOR LIFTING HAS BEEN VERIFIED BY TEST CYLINDERS.
7. CONCRETE FOR P/C WALL SHALL HAVE 28-DAY COMPRESSIVE STRENGTH (f'c) OF 4,000 PSI
8. ALL EXPOSED EMBED PLATES AND CONNECTION PIECES SHALL BE DIP GALVANIZED. MARKS SCRATCHES AND WELDS SHALL BE COATED WITH ZINC RICH REPAIR COATING.
9. PANELS MAY BE SITE OR PLANT FABRICATED AS APPROVED BY ARCHITECT. IF SITE FABRICATION IS PROPOSED, SITE FABRICATED SAMPLES SHALL BE SUBMITTED FOR REVIEW BY ARCHITECT OF EXTERIOR AND INTERIOR FINISHES. IF SITE FABRICATED PANELS ARE NOT APPROVED, PLANT FABRICATION SHALL BE PROVIDED.

PRECAST CONCRETE WALL REINFORCING NOTES :

1. PROVIDE REINFORCEMENT FOR WALL PANELS AS FOLLOWS: #5 @ 12" VERTICAL & #5 @ 12" HORIZONTAL, UNLESS OTHERWISE NOTED, WITH VERTICAL MAT CHAIRED AT MID-DEPTH OF WALL PANEL.
2. 2-#5 AROUND PERIMETER OF PANELS.
3. ADDITIONAL REINFORCEMENT FOR FABRICATION HANDLING AND ERECTION STRESSES WHERE REQUIRED.

NOTE: INSIDE FACES OF WALL PANELS ARE SHOWN. REFER TO ARCHITECTURAL DRAWINGS FOR ACCENT STRIPS, CHAMFERS, REVEALS, SCUPPER HOLES, OTHER WALL FINISHES, AND RUSTIFICATION JOINTS.

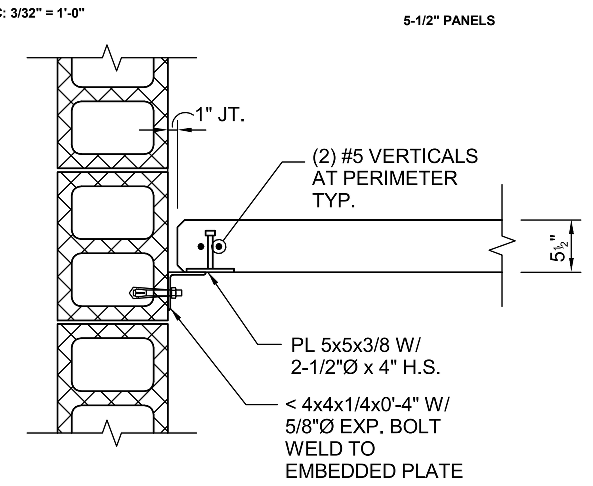

1 SG200 DETAIL

SC: 3/4" = 1'-0"

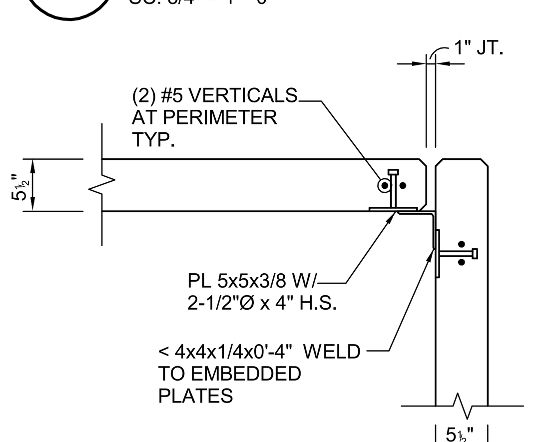

2 SG200 DETAIL

SC: 3/4" = 1'-0"

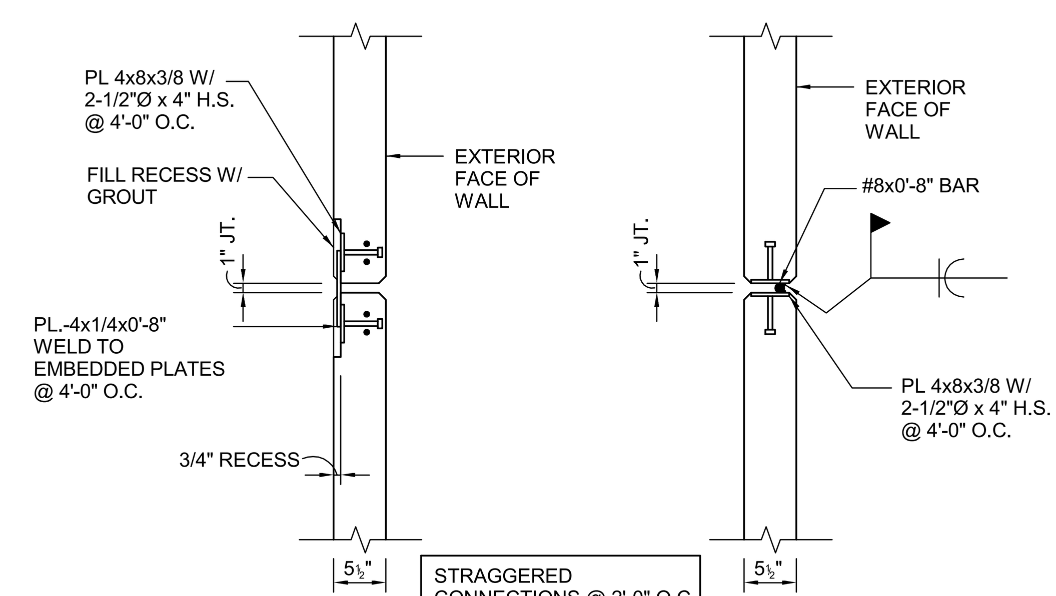

3 SG200 DETAIL

SC: 3/4" = 1'-0"

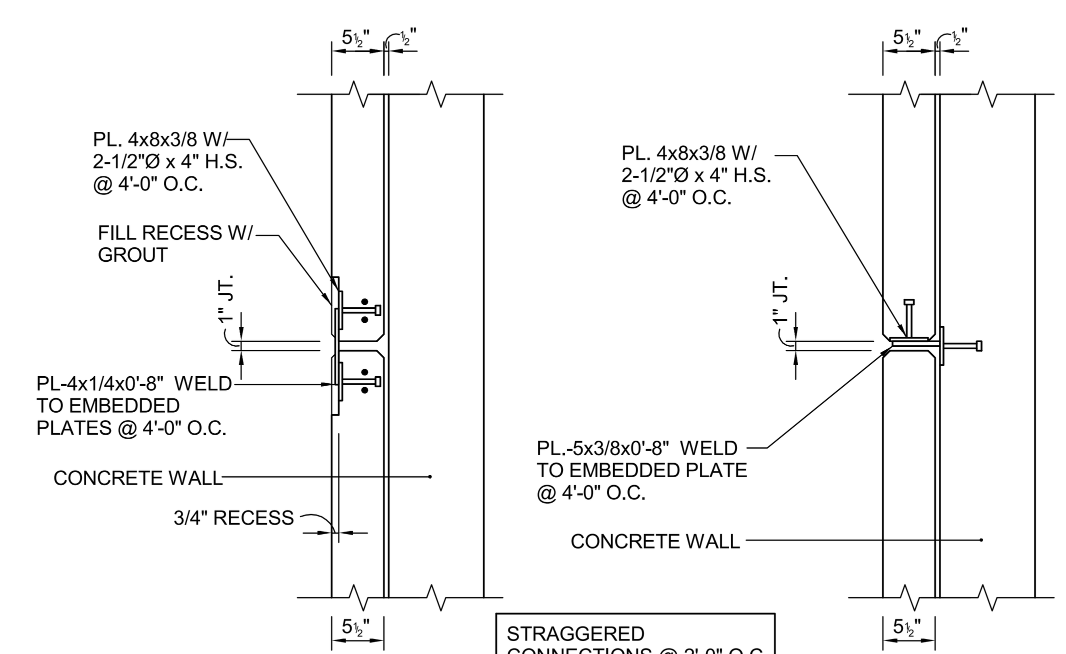

4 SG200 DETAIL

SC: 3/4" = 1'-0"

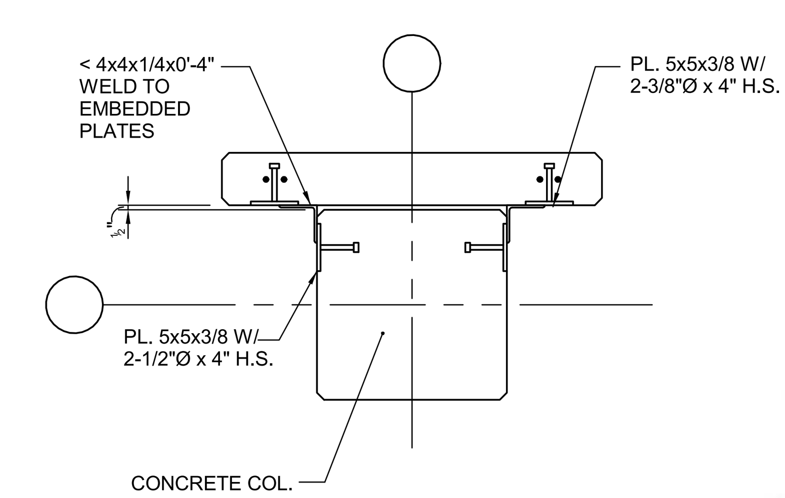

5 SG200 DETAIL

SC: 3/4" = 1'-0"

hkn engineers
3825 Dyer Drive / El Paso, Tx. 79912 FIRM REG. # F-000208 ph. (915) 833-2100 / fax (915) 833-3855 www.hknengineers.com

100% CONSTRUCTION DOCUMENTS

REFERENCES – BENCHMARKS

REVISIONS DATE BY

ENGINEER SEAL
STATE OF TEXAS
JAVIER M. CARLIN
89231
PROFESSIONAL ENGINEER
03/03/16

SCALE HOR: SHOWN VER: SHOWN

DATE DESIGN BY V.L.E.R. J.C. DRAWN BY E.O. CHKD. BY J.C. APPD. BY J.C.

PROJECT NAME
NORTHGATE TRANSFER CENTER
EL PASO, TEXAS

CITY OF EL PASO
CAPITAL IMPROVEMENT DEPARTMENT

SHEET TITLE
PRECAST CONC. WALL ELEVATIONS

SHEET
SG200

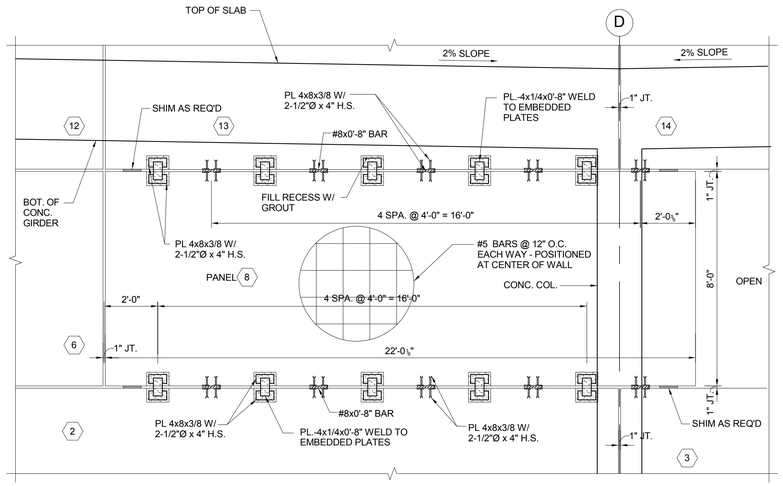

1 SG-201 **LAYOUT DETAIL FOR PANEL 7**

SC: 3/8" = 1' - 0" THICKNESS -= 5 1/2"

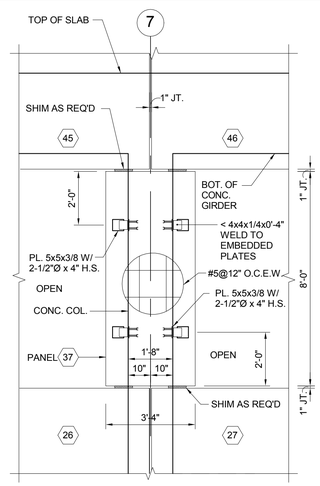

2 SG-201 **LAYOUT FOR PANEL 36**

SC: 3/8" = 1' - 0" THICKNESS -= 5 1/2"

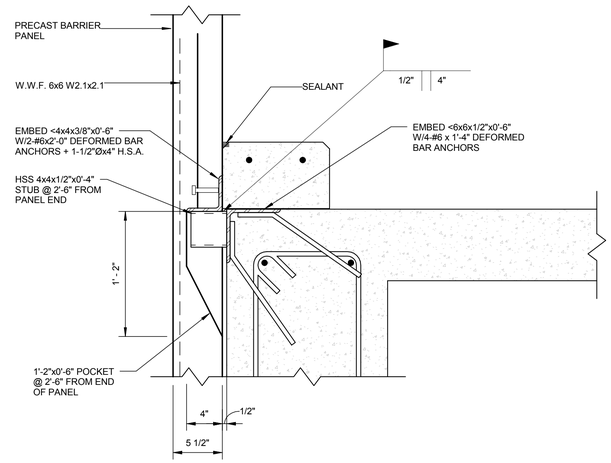

8 SG201 **PANEL SEAT DETAIL**

SC: 1 1/2" = 1'-0"

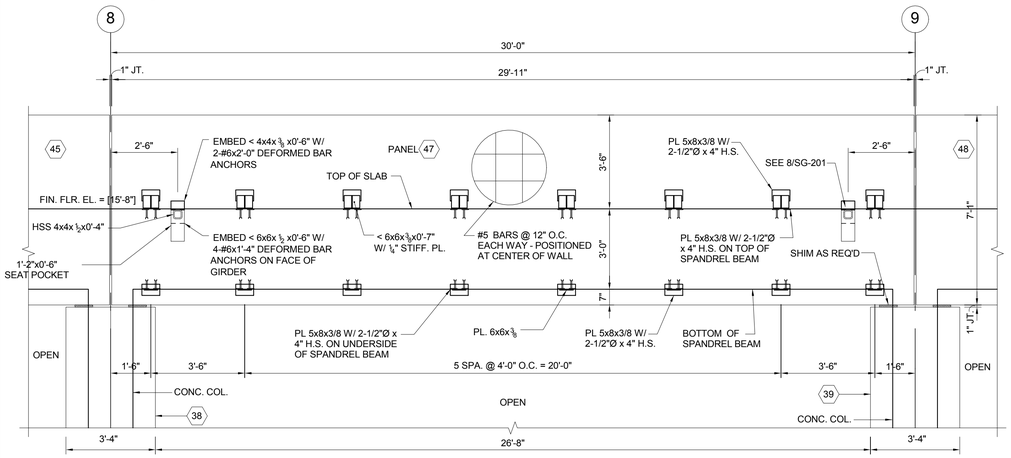

3 SG-201 **LAYOUT DETAIL FOR PANEL 46**

SC: 3/8" = 1' - 0" THICKNESS -= 5 1/2"

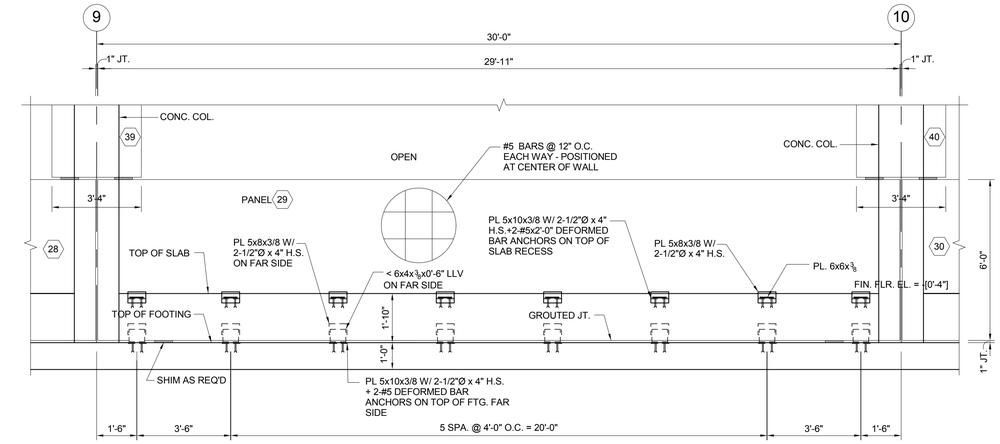

4 SG-201 **LAYOUT DETAIL FOR PANEL 28**

SC: 3/8" = 1' - 0" THICKNESS -= 5 1/2"

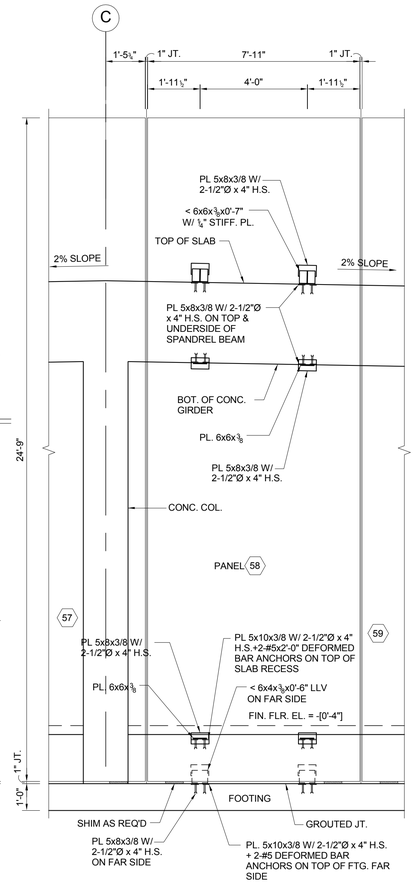

5 SG-201 **LAYOUT FOR PANEL 57**

SC: 3/8" = 1' - 0" THICKNESS -= 5 1/2"

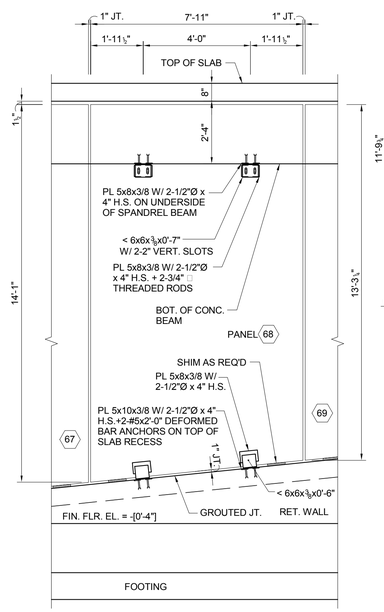

6 SG-201 **LAYOUT FOR PANEL 67**

SC: 3/8" = 1' - 0" THICKNESS -= 5 1/2"

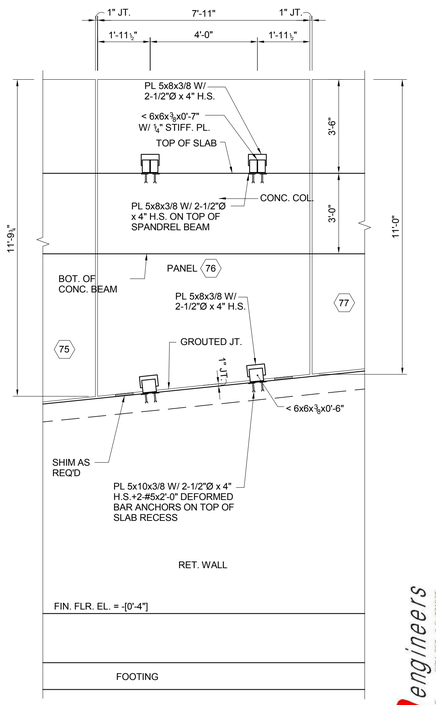

7 SG-201 **LAYOUT FOR PANEL 75**

SC: 3/8" = 1' - 0" THICKNESS -= 5 1/2"

100% CONSTRUCTION DOCUMENTS

REFERENCES – BENCHMARKS

BY	REVISIONS	DATE

ENGINEER SEAL

STATE OF TEXAS
JAVIER M. CARLIN
89231
LICENSED PROFESSIONAL ENGINEER
03/03/16

SCALE	
HOR.	SHOWN
VER.	SHOWN
DATE	03/03/16
DESIGN BY	V.L.E.K. J.C.
DRAWN BY	C.G.
CHKD. BY	J.C.
APPD. BY	J.C.

PROJECT NAME

NORTHGATE TRANSFER CENTER

EL PASO, TEXAS

CITY OF EL PASO

CAPITAL IMPROVEMENT DEPARTMENT

THE CITY OF EL PASO TEXAS

hkn engineers
3800 N. Mesa Street / El Paso, TX 79902
ph: (915) 532-2000 / fax: (915) 532-3855
Texas REG. # F-002239
www.hknengineers.com

SHEET TITLE

LAYOUT DETAIL PRECAST PANELS

SHEET

SG201

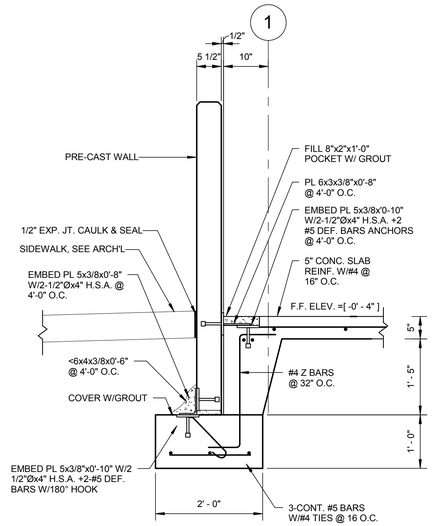

1 SG300 **DETAIL**
SC: 3/4" = 1'-0"

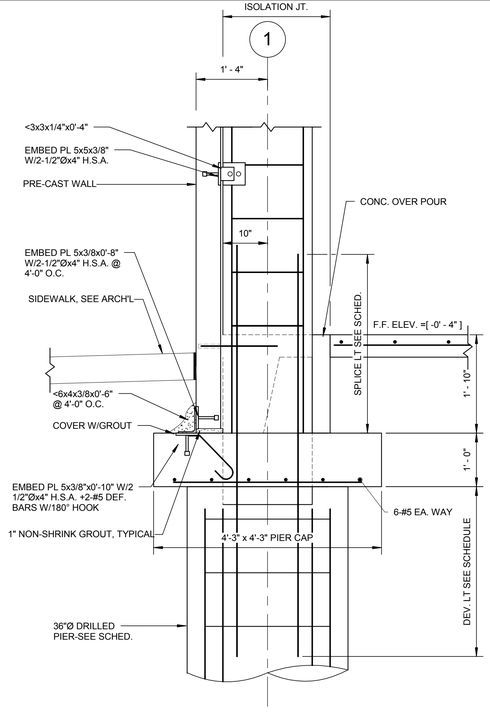

2 SG300 **DETAIL**
SC: 3/4" = 1'-0"

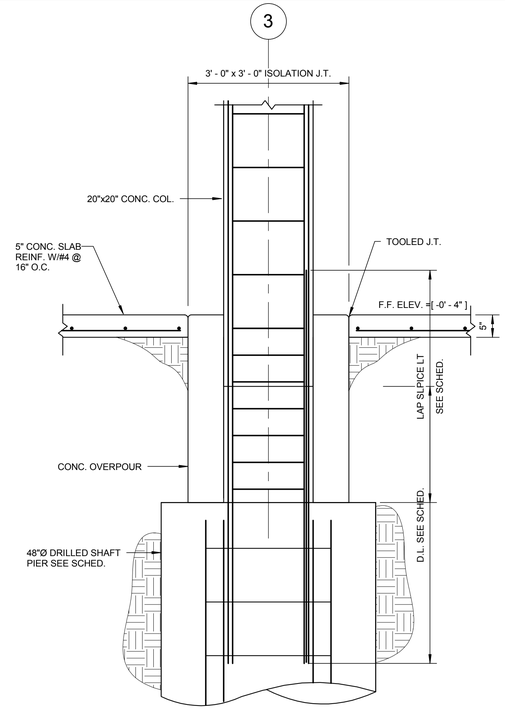

3 SG300 **DETAIL**
SC: 3/4" = 1'-0"

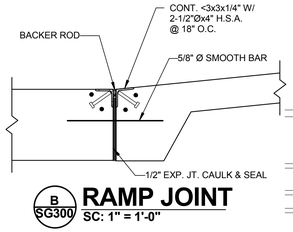

B SG300 **RAMP JOINT**
SC: 1" = 1'-0"

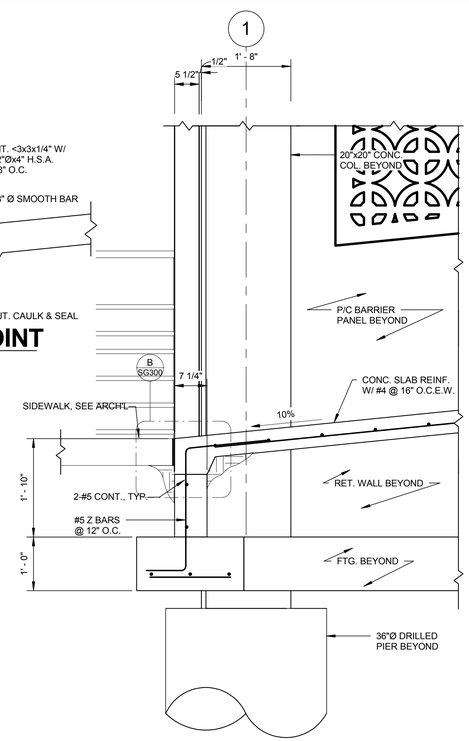

5 SG300 **DETAIL**
SC: 3/4" = 1'-0"

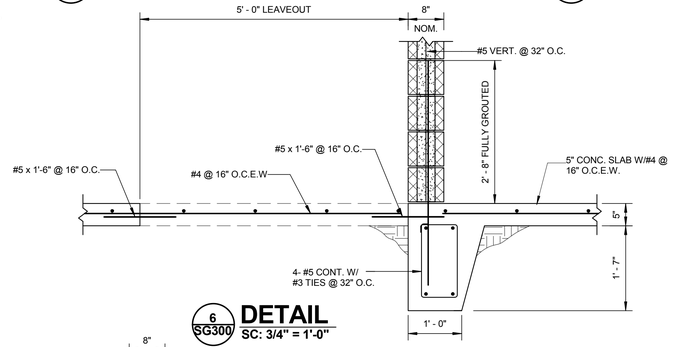

6 SG300 **DETAIL**
SC: 3/4" = 1'-0"

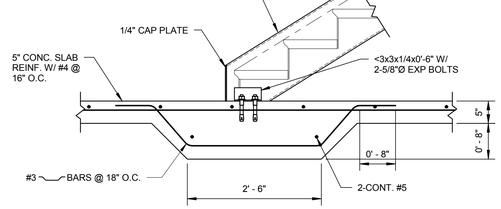

9 SG300 **TYP, STAIRS**
SC: 3/4" = 1'-0"

4 SG300 **DETAIL**
SC: 3/4" = 1'-0"

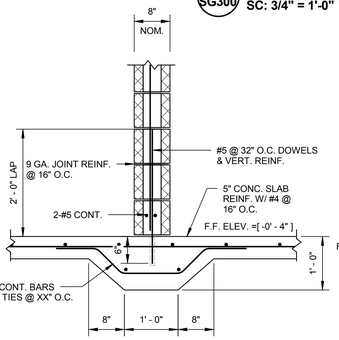

7 SG300 **DETAIL**
SC: 3/4" = 1'-0"

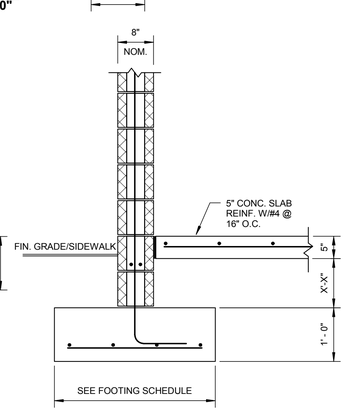

8 SG300 **DETAIL**
SC: 3/4" = 1'-0"

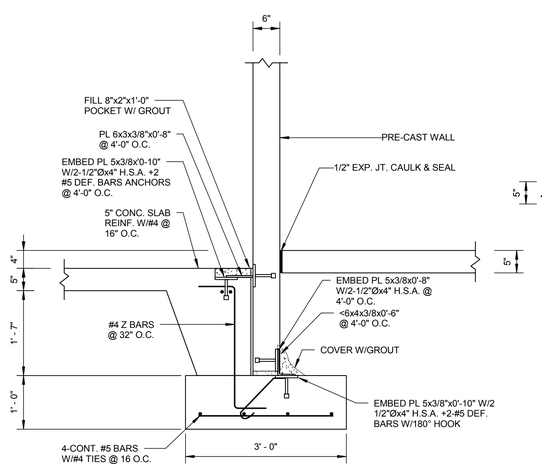

10 SG300 **DETAIL**
SC: 3/4" = 1'-0"

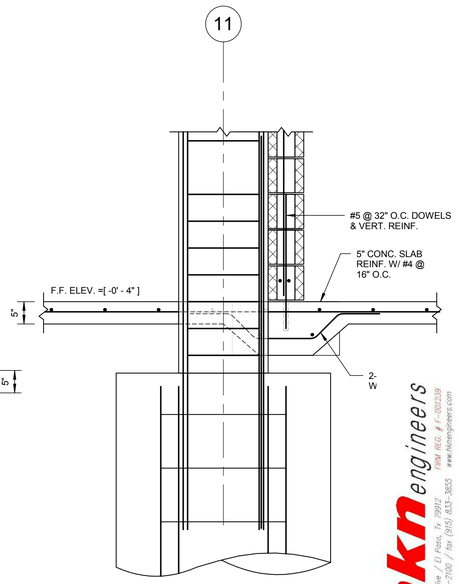

11 SG300 **DETAIL**
SC: 3/4" = 1'-0"

100% CONSTRUCTION DOCUMENTS

REFERENCES – BENCHMARKS

BY	REVISIONS	DATE

ENGINEER SEAL

STATE OF TEXAS
JAVIER M. CARLIN
89231
LICENSED PROFESSIONAL ENGINEER
03/03/16

SCALE	
HOR.	SHOWN
VER.	SHOWN

DATE	03/03/16
DESIGN BY	V.L.E.K. J.C.
DRAWN BY	J.C.
CHKD. BY	J.C.
APPD. BY	

PROJECT NAME

NORTHGATE TRANSFER CENTER

EL PASO, TEXAS

CITY OF EL PASO

CAPITAL IMPROVEMENT DEPARTMENT

THE CITY OF EL PASO TEXAS

SHEET TITLE

FOUNDATION DETAILS

SHEET

SG300

hkn engineers
3800 N. Mesa Street / El Paso, TX 79902
ph: (915) 532-2000 / fax: (915) 532-3655
Firm REG. # F-002239
www.hknengineers.com

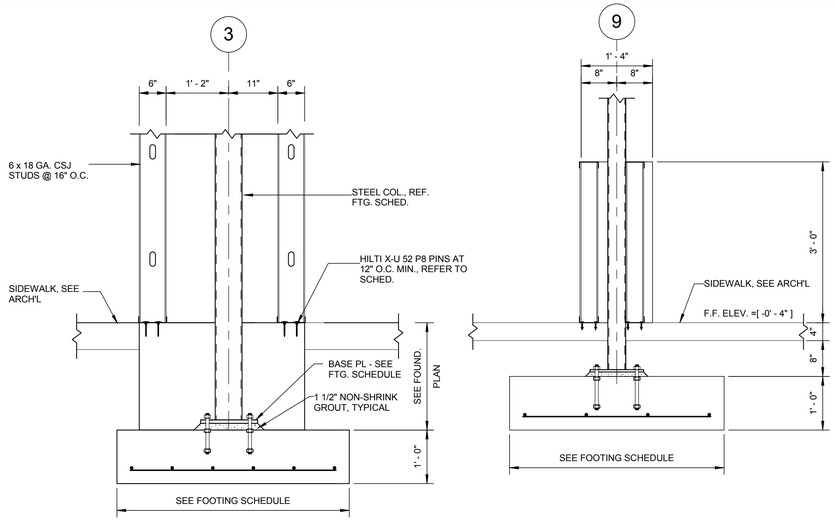

1 SG301 **DETAIL**
SC: 3/4" = 1'-0"

2 SG301 **DETAIL**
SC: 3/4" = 1'-0"

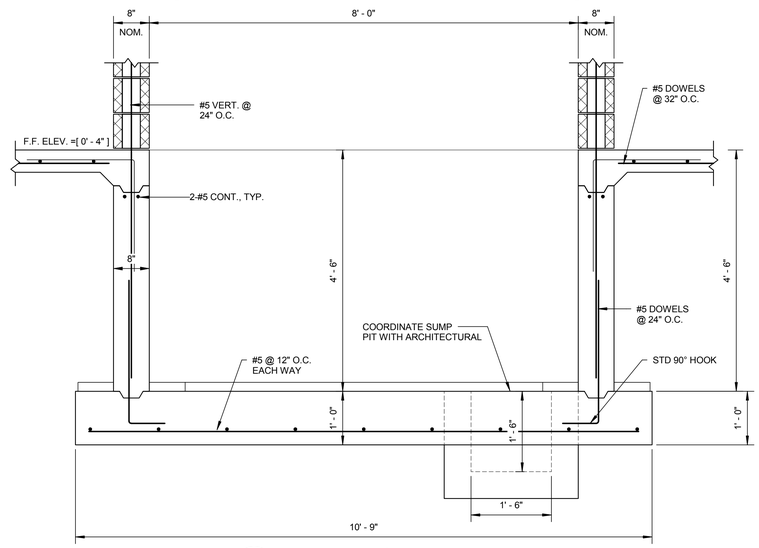

3 SG301 **ELEVATOR PIT**
SC: 3/4" = 1'-0"

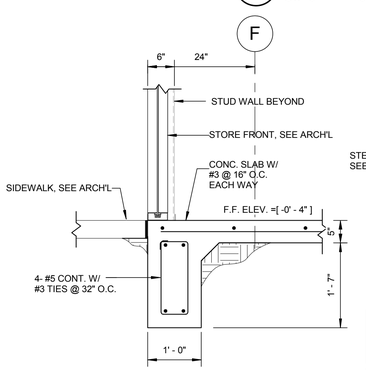

4 SG301 **DETAIL**
SC: 3/4" = 1'-0"

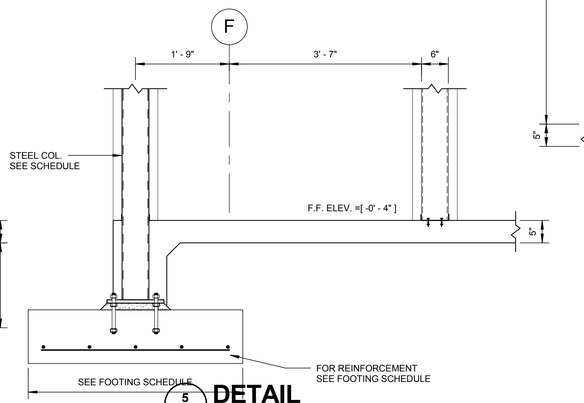

5 SG301 **DETAIL**
SC: 3/4" = 1'-0"

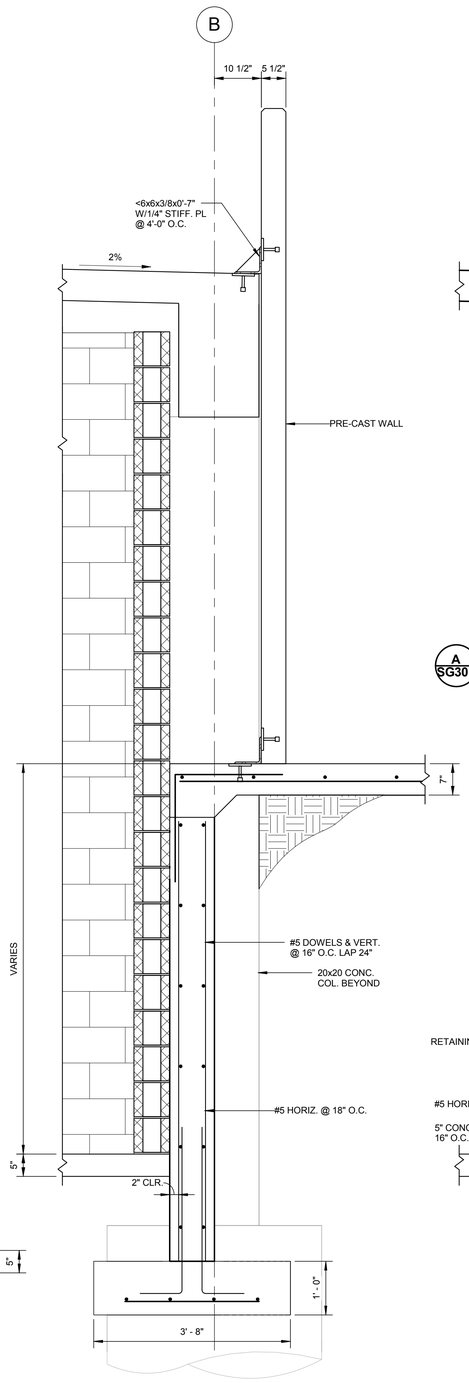

6 SG301 **DETAIL**
SC: 3/4" = 1'-0"

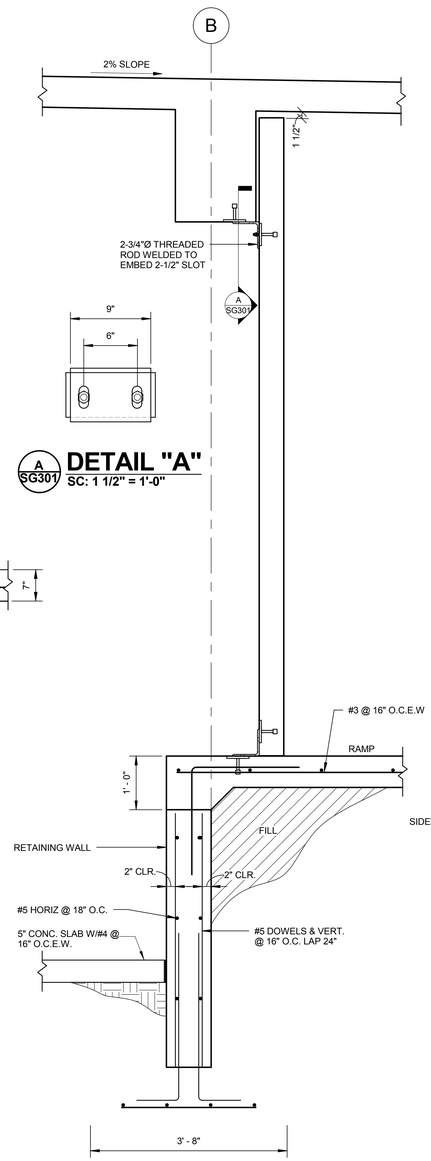

A SG301 **DETAIL "A"**
SC: 1 1/2" = 1'-0"

7 SG301 **DETAIL**
SC: 3/4" = 1'-0"

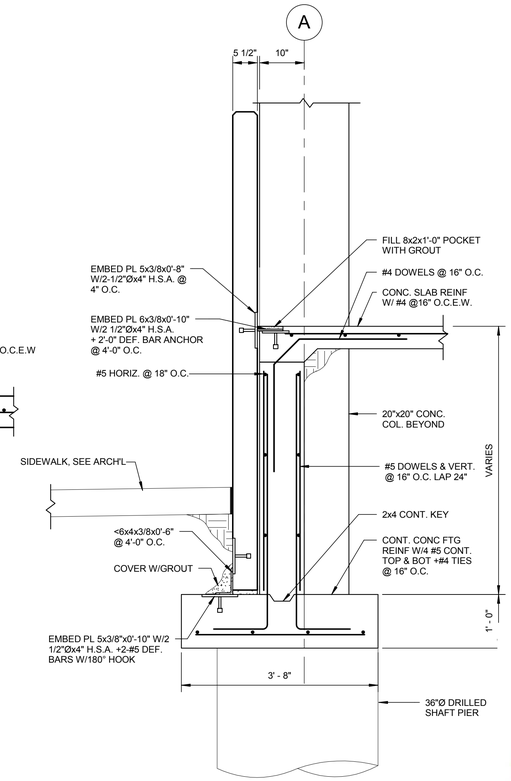

8 SG301 **DETAIL**
SC: 3/4" = 1'-0"

100% CONSTRUCTION DOCUMENTS

REFERENCES – BENCHMARKS

BY	REVISIONS	DATE

ENGINEER SEAL

STATE OF TEXAS
JAVIER M. CARLIN
89231
PROFESSIONAL ENGINEER
03/03/16

SCALE	
HOR.	SHOWN
VER.	SHOWN

DATE	03/03/16
DESIGN BY	V.L.E.K. J.C.
DRAWN BY	J.C.
CHKD. BY	J.C.
APPD. BY	J.C.

PROJECT NAME

NORTHGATE TRANSFER CENTER

EL PASO, TEXAS

CITY OF EL PASO

CAPITAL IMPROVEMENT DEPARTMENT

THE CITY OF EL PASO TEXAS

SHEET TITLE

FOUNDATION DETAILS

SHEET

SG301

hkn engineers
300 S. 4th Street / El Paso, TX 79912
ph. (915) 833-2080 / fax (915) 833-9855
TBPE REG. # F-002239
www.hknengineers.com

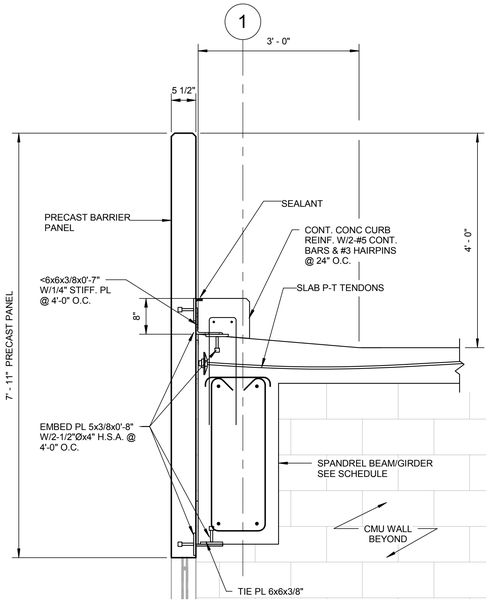

1 SG400 **DETAIL** SC: 3/4" = 1'-0"

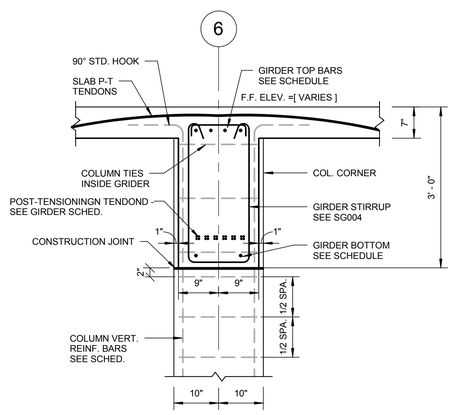

2 SG400 **DETAIL** SC: 3/4" = 1'-0"

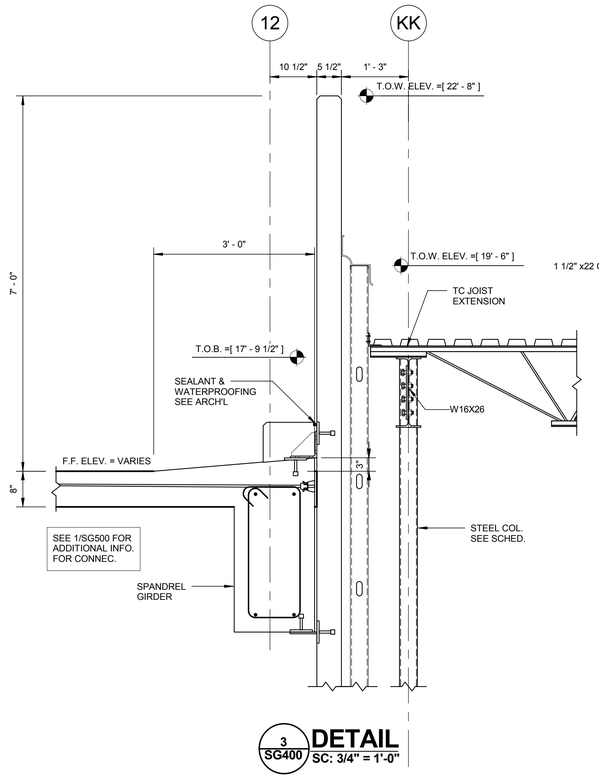

3 SG400 **DETAIL** SC: 3/4" = 1'-0"

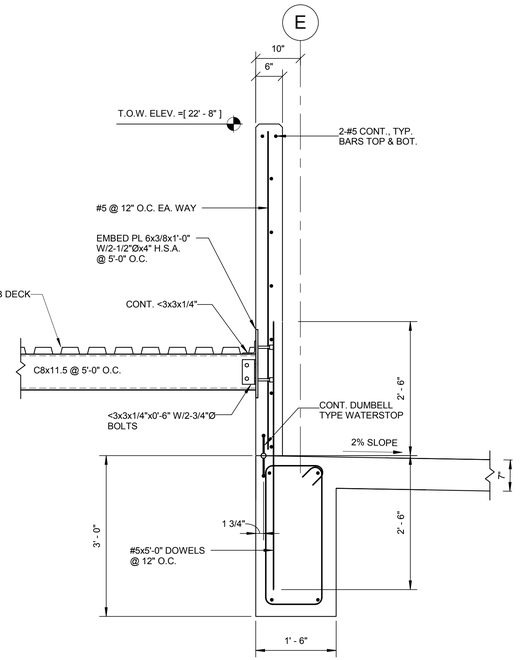

4 SG400 **DETAIL** SC: 3/4" = 1'-0"

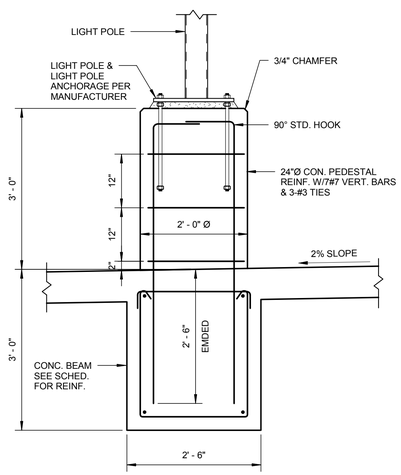

5 SG400 **DETAIL** SC: 3/4" = 1'-0"

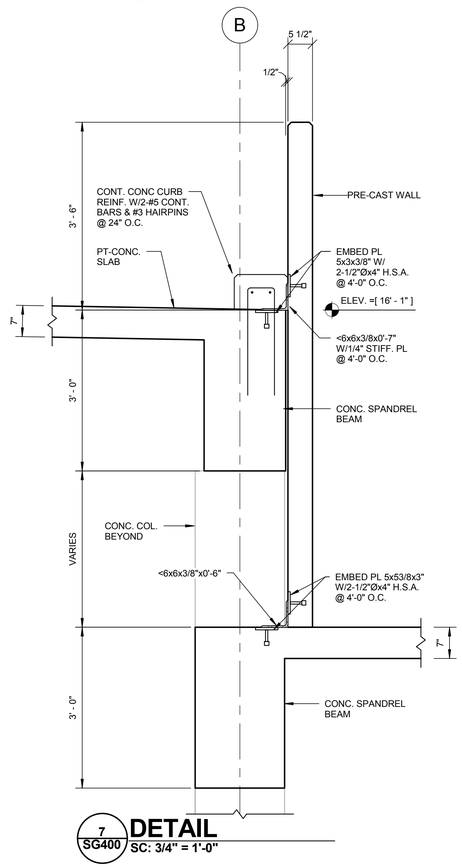

7 SG400 **DETAIL** SC: 3/4" = 1'-0"

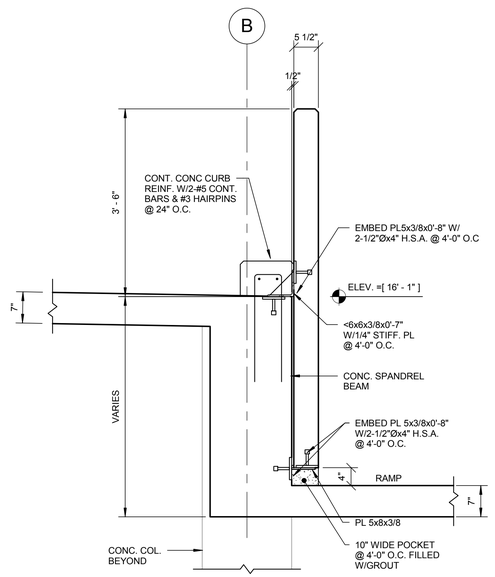

8 SG400 **DETAIL** SC: 3/4" = 1'-0"

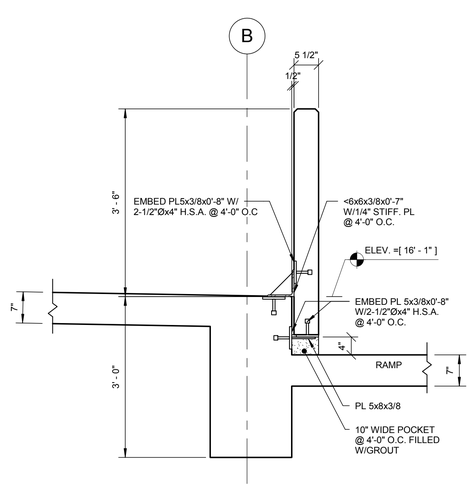

9 SG400 **DETAIL** SC: 3/4" = 1'-0"

100% CONSTRUCTION DOCUMENTS

REFERENCES – BENCHMARKS

BY	REVISIONS	DATE

ENGINEER SEAL

STATE OF TEXAS
JAVIER M. CARLIN
89231
LICENSED PROFESSIONAL ENGINEER
03/03/16

SCALE	
HOR.	SHOWN
VER.	SHOWN

DATE	9/08/16
DESIGN BY	V.L.E.K. J.C.
DRAWN BY	J.C.
CHKD. BY	J.C.
APPD. BY	J.C.

PROJECT NAME

NORTHGATE TRANSFER CENTER

EL PASO, TEXAS

CITY OF EL PASO
CAPITAL IMPROVEMENT DEPARTMENT

SHEET TITLE

PARKING LEVEL 2 FRAMING DETAILS

SHEET

SG400

hkn engineers
3006 Dyer Drive / El Paso, TX 79922
ph. (915) 532-2190 / fax (915) 532-3815
TBPE REG. # F-439
www.hknengineers.com

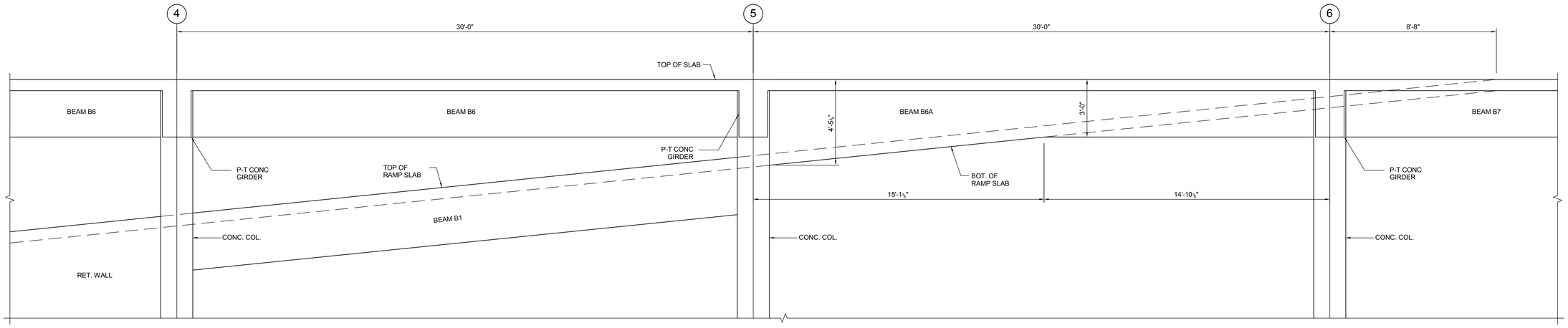

1 SG401 CONCRETE FRAME ELEVATION ALONG GRID "B"

SC: 3/8" = 1'-0"

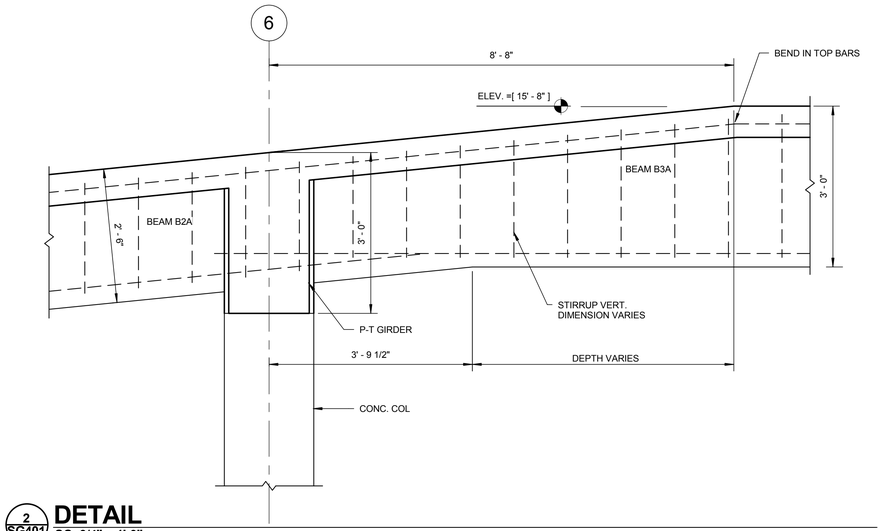

2 SG401 DETAIL

SC: 3/4" = 1'-0"

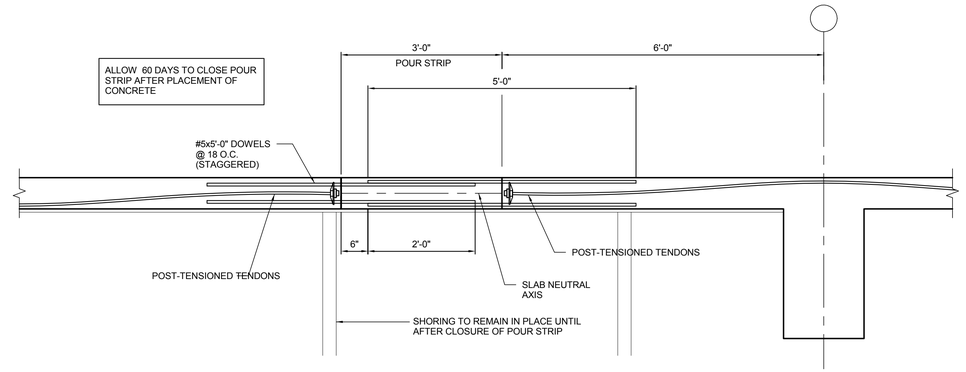

3 SG401 SLAB POUR STRIP

SC: 3/4" = 1'-0"

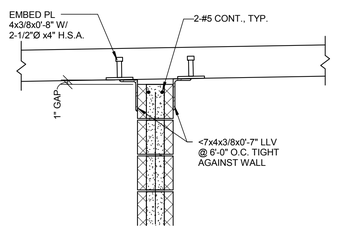

4 SG401 BRACING OF TOP OF CMU WALL

SC: 3/4" = 1'-0"

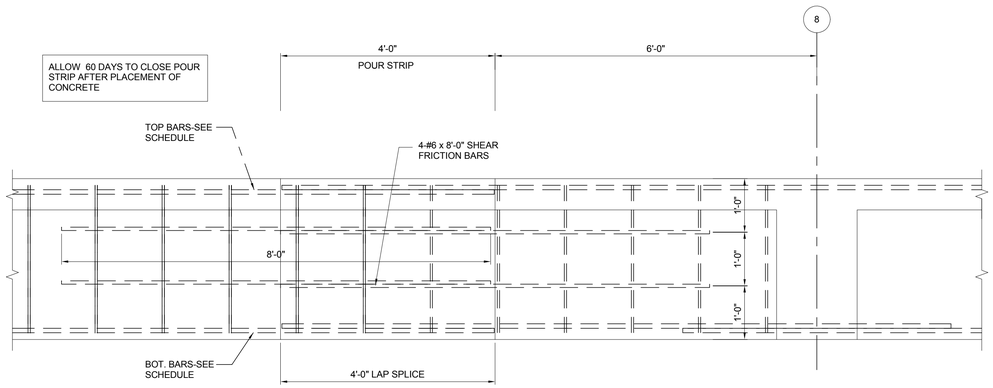

5 SG401 BEAM POUR STRIP

SC: 3/4" = 1'-0"

100% CONSTRUCTION DOCUMENTS

REFERENCES – BENCHMARKS

BY	REVISIONS	DATE

ENGINEER SEAL

STATE OF TEXAS
JAVIER M. CARLIN
89231
PROFESSIONAL ENGINEER
03/03/16

SCALE
HOR: SHOWN
VER: SHOWN

DATE 03/03/16
DESIGN BY V.L.E.K. J.C.
DRAWN BY J.C.
CHKD. BY J.C.
APPD. BY J.C.

PROJECT NAME

NORTHGATE TRANSFER CENTER

EL PASO, TEXAS

CITY OF EL PASO
CAPITAL IMPROVEMENT DEPARTMENT

THE CITY OF EL PASO TEXAS

SHEET TITLE

PARKING LEVEL 2 FRAMING PLANS

SHEET

SG401

hkn engineers
3800 N. Mesa Street / El Paso, TX 79902
ph (915) 532-2700 / fax (915) 532-3855
TBPE REG. # F-000209
www.hknengineers.com

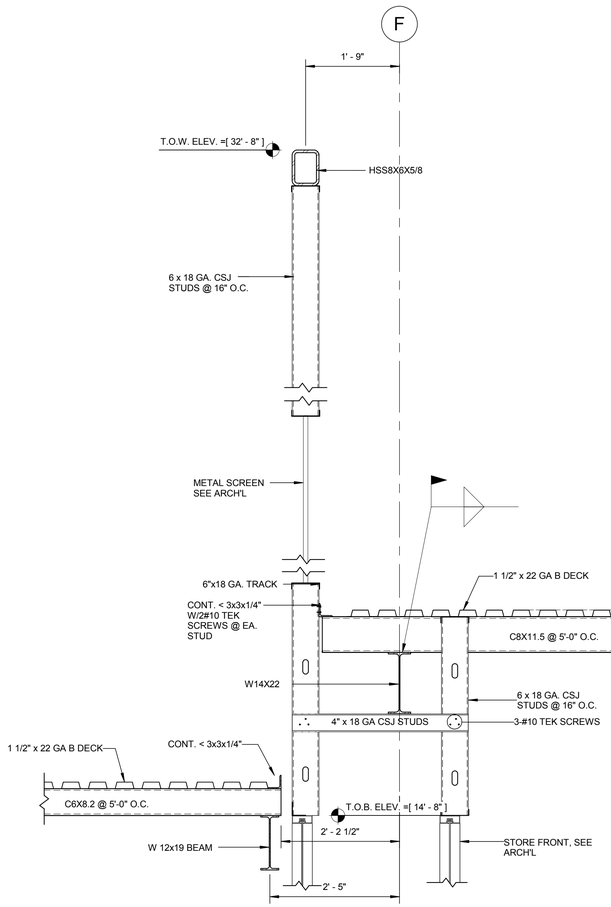

1 SG402 **DETAIL** SC: 3/4" = 1'-0"

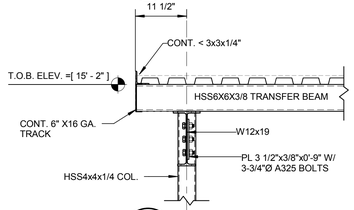

3 SG402 **DETAIL** SC: 3/4" = 1'-0"

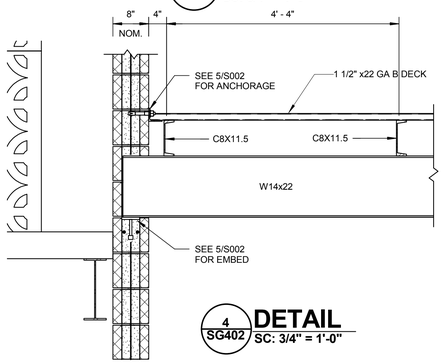

4 SG402 **DETAIL** SC: 3/4" = 1'-0"

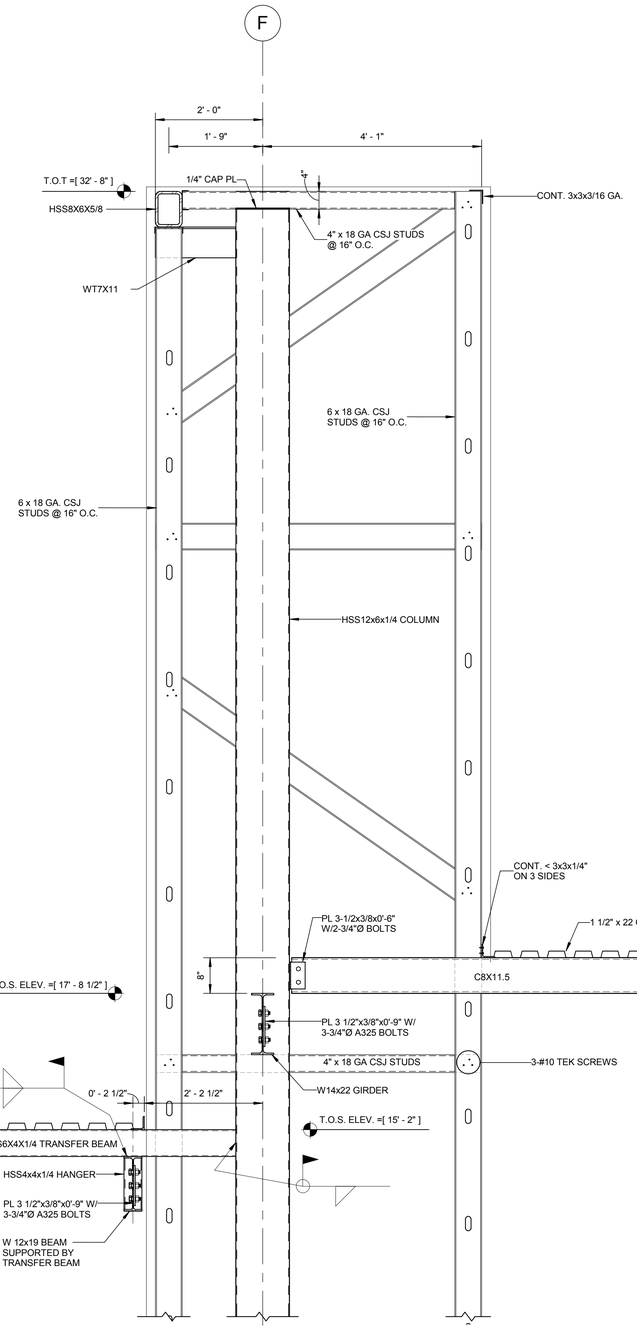

2 SG402 **DETAIL** SC: 3/4" = 1'-0"

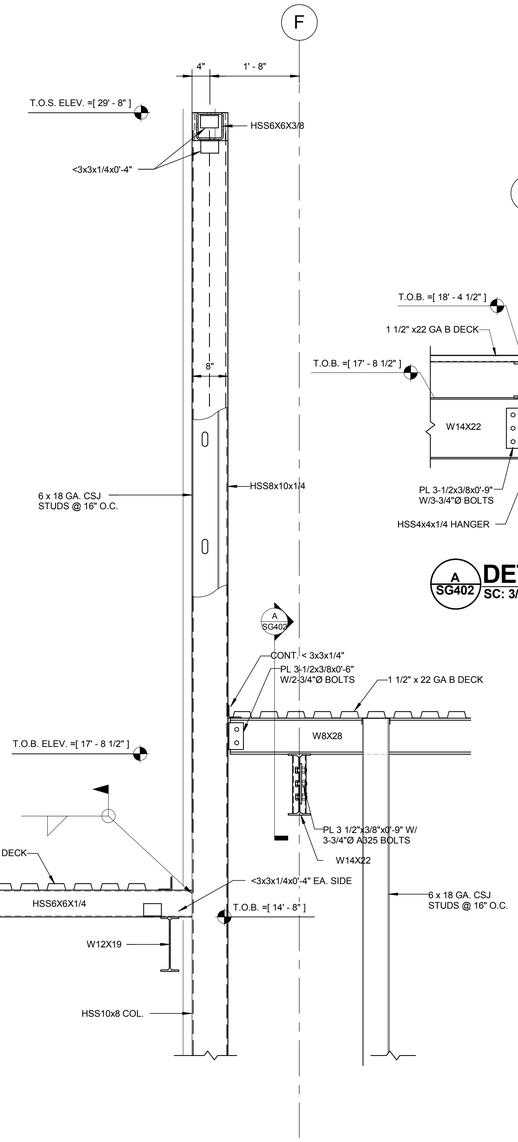

5 SG402 **DETAIL** SC: 3/4" = 1'-0"

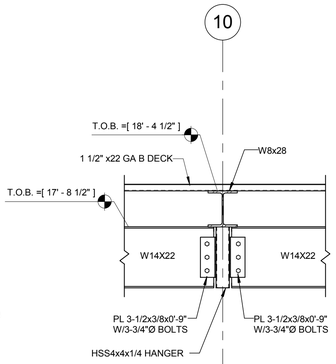

A SG402 **DETAIL** SC: 3/4" = 1'-0"

100% CONSTRUCTION DOCUMENTS

hkn engineers
3005 Dow Drive / El Paso, TX 79925
ph: (915) 833-2080 / fax (915) 833-3855
TBPE REG. # F-001239
www.hknengineers.com

REFERENCES – BENCHMARKS

BY	REVISIONS	DATE

ENGINEER SEAL

STATE OF TEXAS
JAVIER M. CARLIN
89231
LICENSED PROFESSIONAL ENGINEER
03/03/16

SCALE	
HOR.	SHOWN
VER.	SHOWN

DATE	03/03/16
DESIGN BY	V.L.E.K. J.C.
DRAWN BY	E.G.
CHKD. BY	J.C.
APPD. BY	J.C.

PROJECT NAME

NORTHGATE TRANSFER CENTER

EL PASO, TEXAS

CITY OF EL PASO

CAPITAL IMPROVEMENT DEPARTMENT

THE CITY OF EL PASO TEXAS

SHEET TITLE

RETAIL ROOF
FRAMING DETAILS

SHEET

SG402

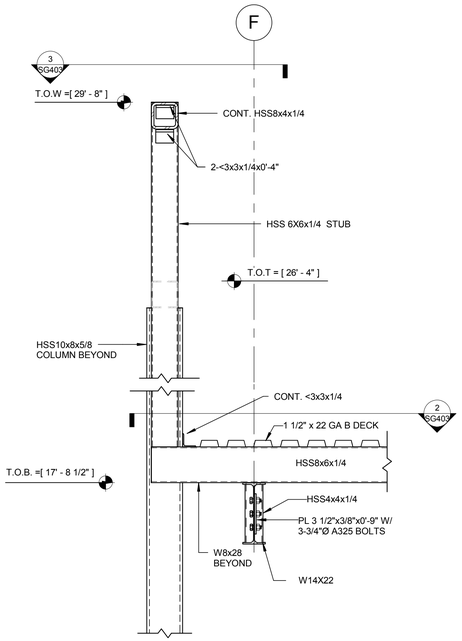

1 SG403 DETAIL
SC: 3/4" = 1'-0"

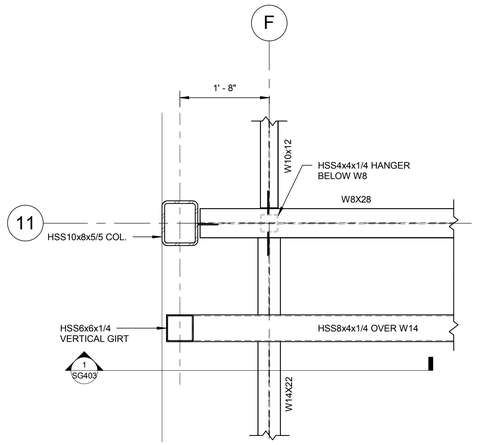

2 SG403 DETAIL
SC: 3/4" = 1'-0"

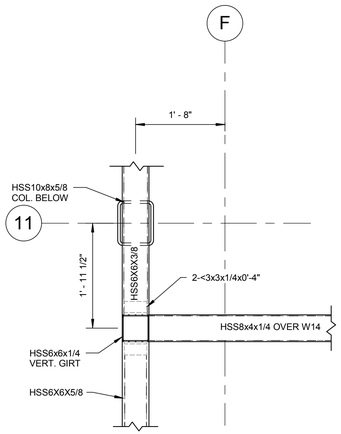

3 SG403 DETAIL
SC: 3/4" = 1'-0"

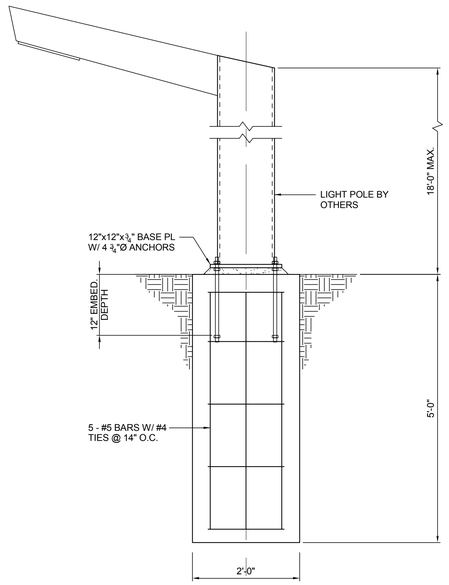

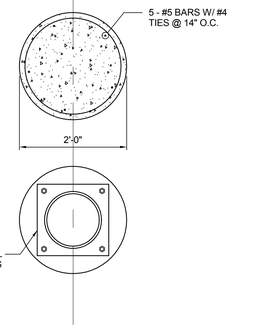

5 SG403 LIGHT POLE DETAIL
SC: 3/4" = 1'-0"

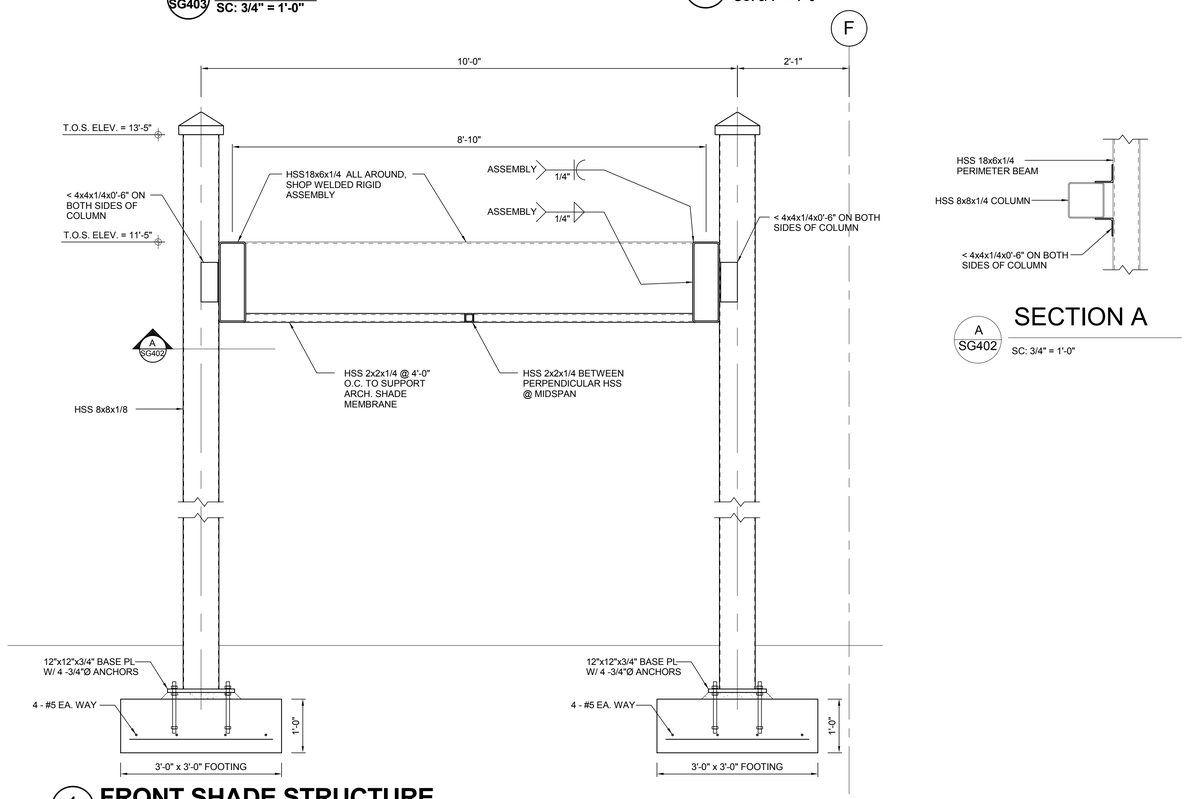

4 SG403 FRONT SHADE STRUCTURE
SC: 3/4" = 1'-0"

A SG402 SECTION A
SC: 3/4" = 1'-0"

100% CONSTRUCTION DOCUMENTS

hkn engineers
3005 Dyer Drive / El Paso, TX 79932
ph: (915) 833-2080 / fax: (915) 833-3855
TBPE REG. # F-001239
www.hknengineers.com

REFERENCES – BENCHMARKS

REVISIONS

BY	DATE

ENGINEER SEAL

STATE OF TEXAS
JAVIER M. CARLIN
89231
LICENSED PROFESSIONAL ENGINEER
03/03/16

SCALE
HOR. SHOWN
VER. SHOWN

DATE 9/28/16
DESIGN BY V.L.E.K. J.C.
DRAWN BY E.G. J.C.
CHKD. BY J.C.
APPD. BY J.C.

PROJECT NAME

NORTHGATE TRANSFER CENTER

EL PASO, TEXAS

CITY OF EL PASO
CAPITAL IMPROVEMENT DEPARTMENT

THE CITY OF EL PASO TEXAS

SHEET TITLE

RETAIL ROOF
FRAMING DETAILS

SHEET
SG403

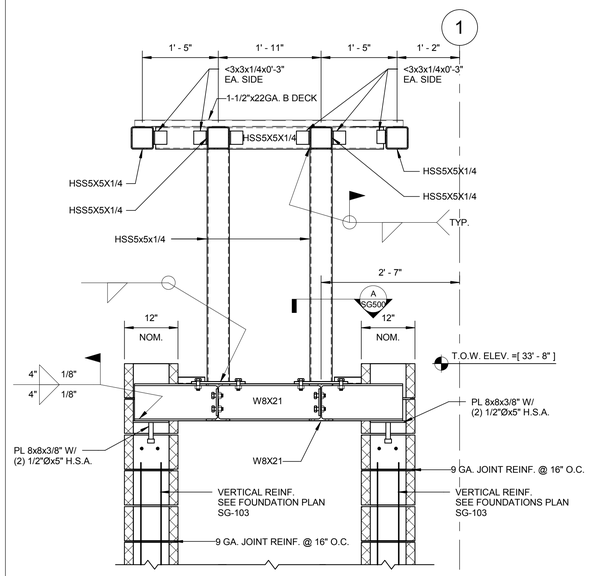

1 SG500 DETAIL
SC: 3/4" = 1'-0"

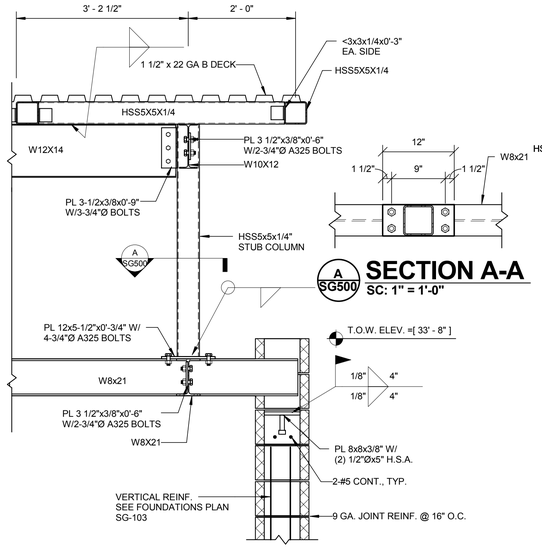

A SG500 SECTION A-A
SC: 1" = 1'-0"

3 SG500 DETAIL
SC: 3/4" = 1'-0"

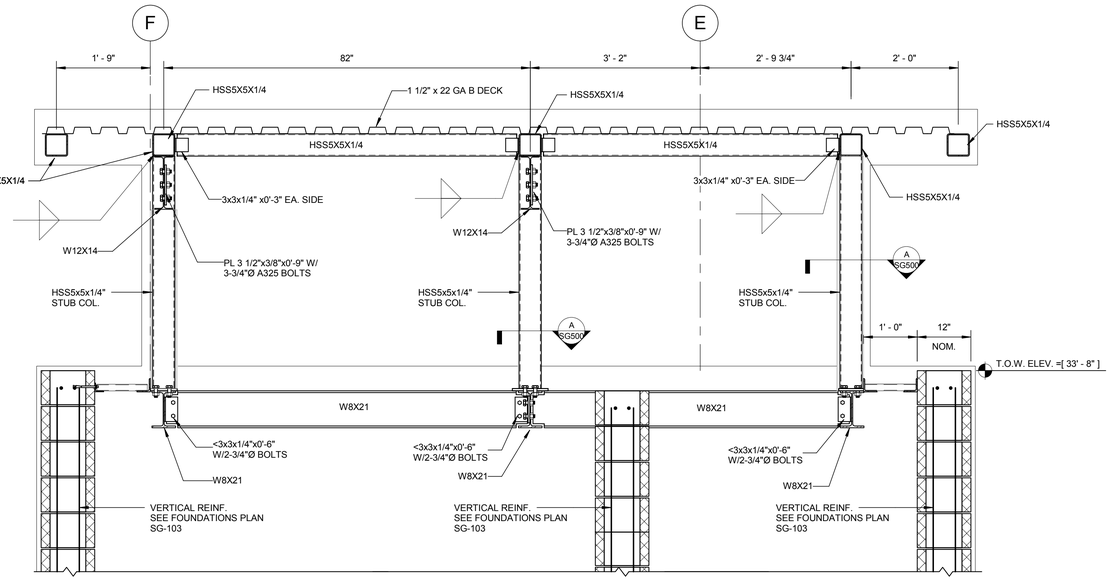

2 SG500 DETAIL
SC: 3/4" = 1'-0"

REFERENCES – BENCHMARKS

BY	REVISIONS	DATE

ENGINEER SEAL

STATE OF TEXAS
JAVIER M. CARLIN
87231
LICENSED PROFESSIONAL ENGINEER
03/03/16

SCALE	
HOR.	SHOWN
VER.	SHOWN
DATE	03/03/16
DESIGN BY	V.T./E.K./J.C.
DRAWN BY	J.C.
CHKD. BY	J.C.
APPD. BY	J.C.

PROJECT NAME

NORTHGATE TRANSFER CENTER

EL PASO, TEXAS

CITY OF EL PASO
CAPITAL IMPROVEMENT DEPARTMENT

SHEET TITLE

EAST TOWER FRAMING DETAILS

SHEET
SG500

hkn engineers
300 Throckmorton Street / Ft. Worth, TX 76102
ph. (817) 335-1100 / fax (817) 335-1855 www.hknengineers.com
TBPE REG. # F-000309

100% CONSTRUCTION DOCUMENTS

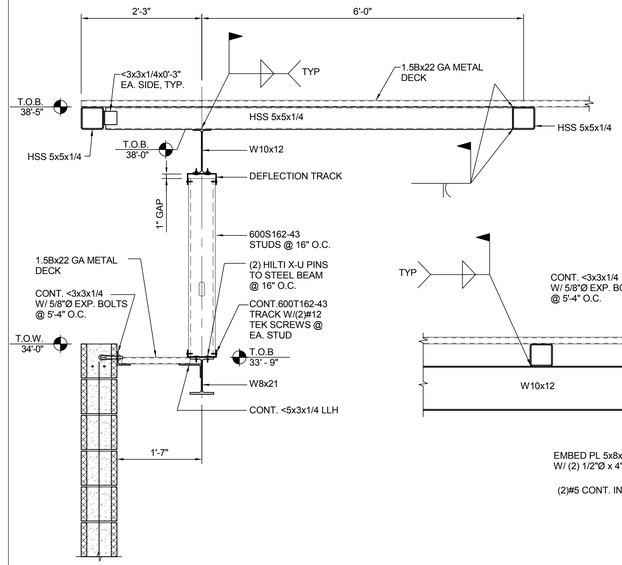

1 SG501 **DETAIL**
SC: 3/4" = 1'-0"

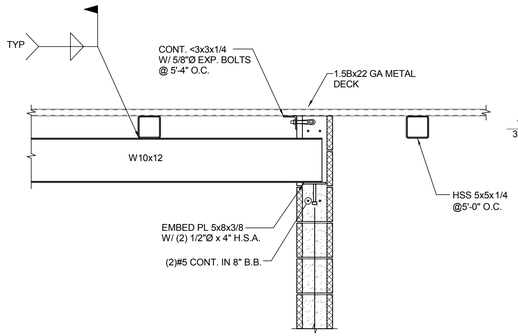

2 SG501 **DETAIL**
SC: 3/4" = 1'-0"

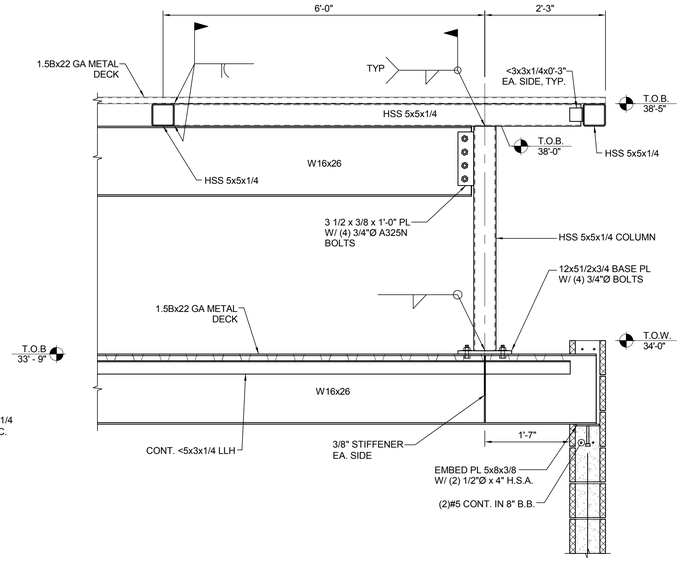

3 SG501 **DETAIL**
SC: 3/4" = 1'-0"

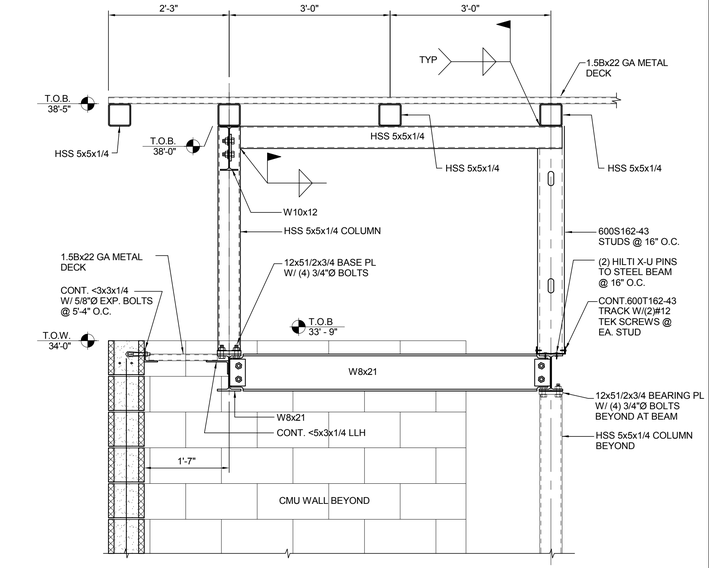

4 SG501 **DETAIL**
SC: 3/4" = 1'-0"

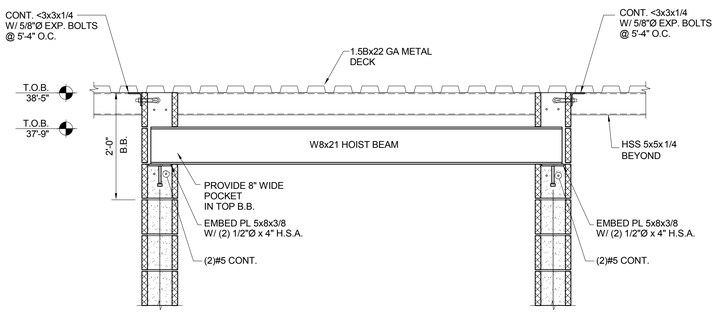

6 SG501 **DETAIL**
SC: 3/4" = 1'-0"

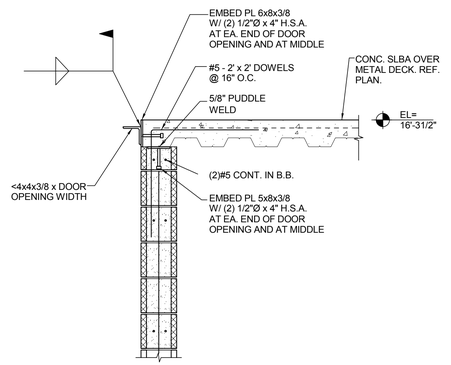

8 SG501 **SLAB AT ELEVATOR DOOR**
SC: 3/4" = 1'-0"

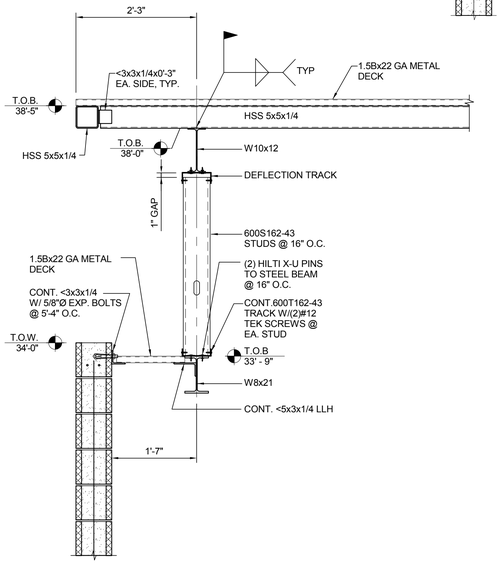

5 SG501 **DETAIL**
SC: 3/4" = 1'-0"

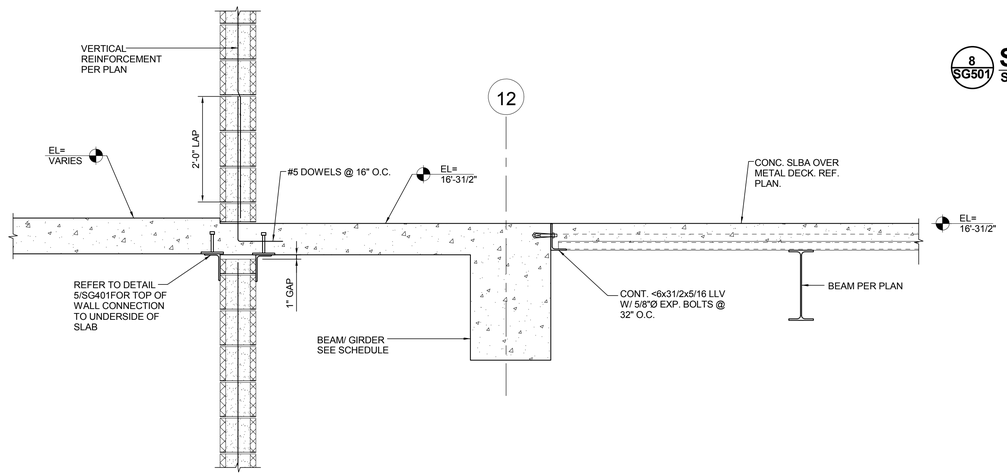

7 SG501 **DETAIL**
SC: 3/4" = 1'-0"

100% CONSTRUCTION DOCUMENTS

REFERENCES – BENCHMARKS

DATE	REVISIONS	BY

ENGINEER SEAL

STATE OF TEXAS
JAVIER M. CARLIN
89231
LICENSED PROFESSIONAL ENGINEER
03/03/16

SCALE
HOR. SHOWN
VER. SHOWN

DATE 03/03/16
DESIGN BY V.L.E.R., J.C.
DRAWN BY C.C.
CHKD. BY J.C.
APPD. BY J.C.

PROJECT NAME
NORTHGATE TRANSFER CENTER
EL PASO, TEXAS

CITY OF EL PASO
CAPITAL IMPROVEMENT DEPARTMENT

SHEET TITLE
EAST TOWER FRAMING DETAILS

SHEET
SG501

hkn engineers
3609 N. Lee Trevino Dr. / El Paso, Tx. 79904
ph: (915) 532-2190 / fax: (915) 532-3865
Firm REG. # F-439

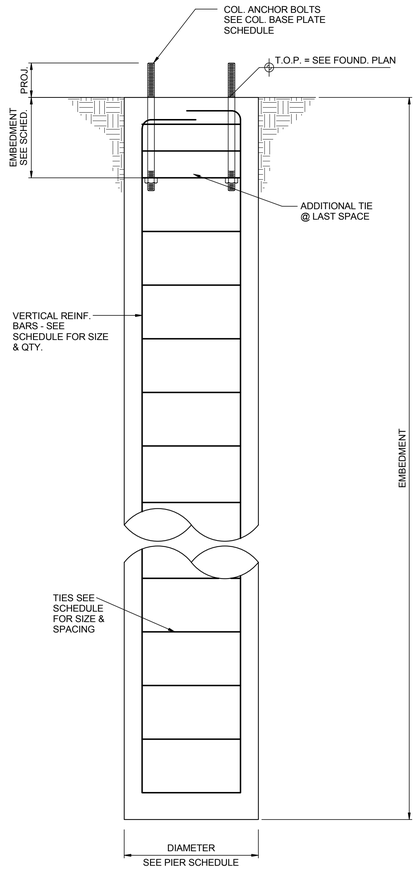

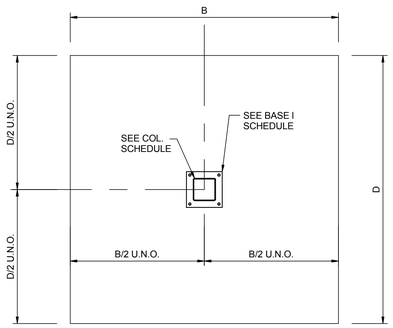

FOOTING SCHEDULE				
MARK	B, FT- IN	D, FT- IN	T, FT-IN	REINFORCEMENT
F1	4'-0"	4'-0"	1'-6"	4-#5 EA.WAY

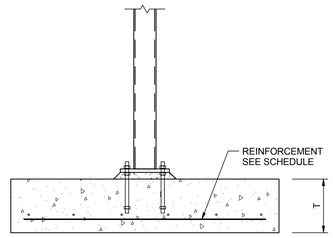

2 S001 SPREAD FOOTING DETAIL & SCHEDULE

NO SCALE

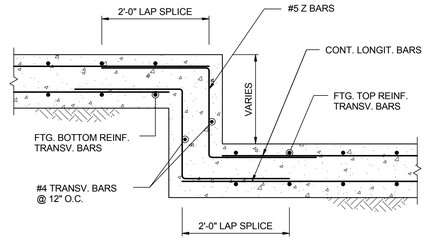

3 S001 FOOTING STEP

NO SCALE

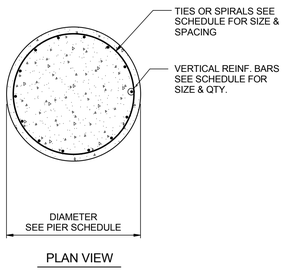

PLAN VIEW

STRAIGHT SHAFT DRILLED CONCRETE PIER SCHEDULE					
MARK	DIAMETER	EMBEDMENT	REINFORCEMENT		DESIGN
			VERT. BARS	TIES	LOAD, KIPS
P7	3'-0"	24'-0"	10-#9	#3 @ 18" O.C.	120
P8	3'-6"	30'-0"	16-#10	#3 @ 18" O.C.	- - -

1 S001 DRILLED PIER SCHEDULE

NO SCALE

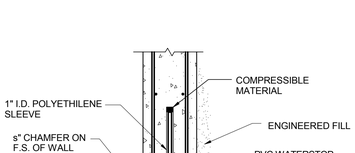

4 S001 EDGE OF SLAB TURNDOWN

SC: 3/4" = 1' - 0"

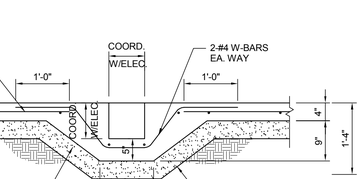

5 S001 TYP. CONTROL. JT.

NO SCALE

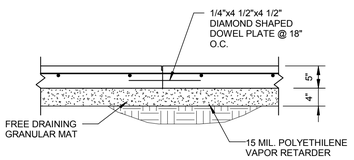

6 S001 CONSTRUCTION JOINT

NO SCALE

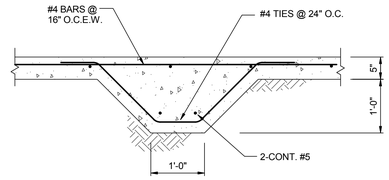

7 S001 THICKENED SLAB

NO SCALE

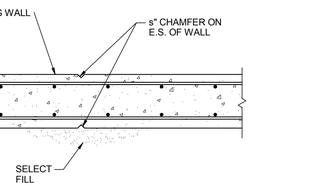

9 S001 WALL CONTROL JT.

NO SCALE

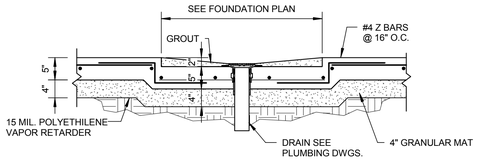

13 S001 SHOWER SLAB

SC: 3/4" = 1'-0"

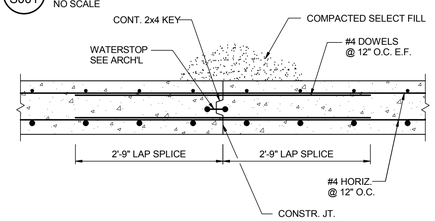

10 S001 WALL CONSTR. JT.

NO SCALE

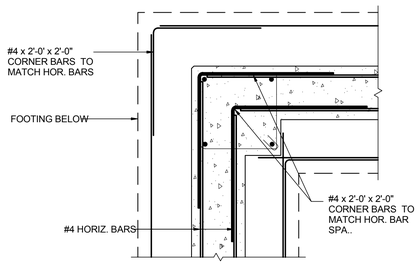

11 S001 WALL CORNER

NO SCALE

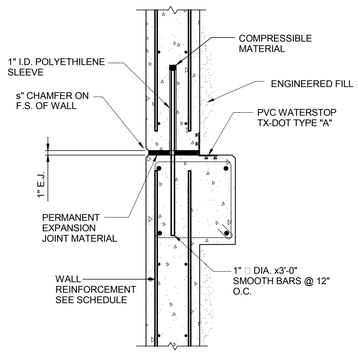

12 S001 WALL EXPANSION JOINT

NO SCALE

14 S001 RECESSED BOX

SC: 3/4" = 1'-0"

100% CONSTRUCTION DOCUMENTS

REFERENCES – BENCHMARKS

BY	REVISIONS	DATE

ENGINEER SEAL

STATE OF TEXAS
JAVIER M. CARLIN
89231
REGISTERED PROFESSIONAL ENGINEER
03/03/16

SCALE	
HOR.	SHOWN
VER.	SHOWN

DATE	03/03/16
DESIGN BY	V.L.E.K. J.C.
DRAWN BY	C.G.
CHKD. BY	J.C.
APPD. BY	J.C.

PROJECT NAME

NORTHGATE TRANSFER CENTER

EL PASO, TEXAS

CITY OF EL PASO

CAPITAL IMPROVEMENT DEPARTMENT

THE CITY OF EL PASO TEXAS

SHEET TITLE

TYPICAL FOUNDATION DETAILS

SHEET

S001

hkn engineers
5005 Dtc Drive / El Paso, Tx 79912
ph: (915) 833-2700 / fax: (915) 833-9855
TBPE REG. # F-002239
www.hknengineers.com

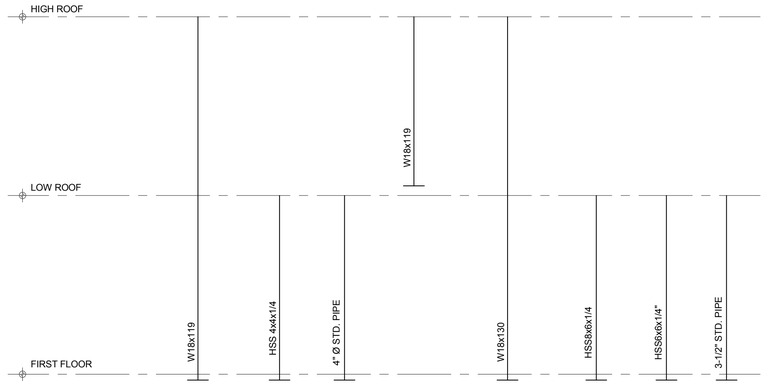

COLUMN MARK	C1	C2	C3	C4	C5	C6	C7	C8
BASE PLATE MARK/DETAIL	BP1	BP1	BP1	BP1	BP1	BP1	BP1	BP1

STRUCTURAL STEEL COLUMN SCHEDULE

1 / S002

SC: 1/8" = 1' - 0"

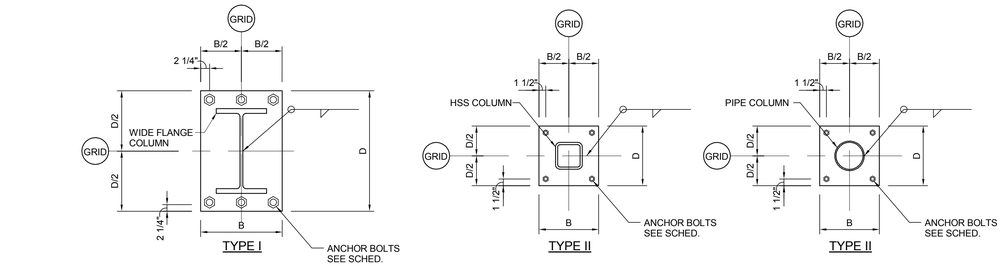

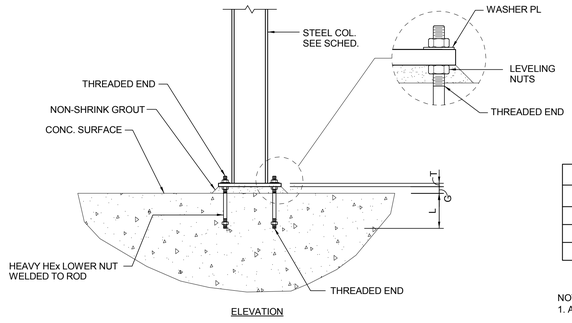

COLUMN BASE I SCHEDULE				ANCHOR BOLTS SCHEDULE			
MARK	B, FT- IN	D, FT- IN	T, IN	ANCHOR BOLTS	L, FT- IN	G, IN	TYPE
BP1	1-6	2-3	1 1/2"	(6)-1 1/2"Ø	1-6	2	I
BP2	0-10	0-10	3/4"	(4)-3/4"Ø	0-9	1	II
BP3	0-10	0-10	3/4"	(4)-3/4"Ø	0-9	1	III

NOTES:
1. ANCHOR BOLTS ARE SIZED FOR COMPRESSION CONDITION ONLY. ERECTOR SHALL EVALUATE THE STRENGTH OF COLUMN BASE ANCHOR BOLTS TO PROVIDE STABILITY AGAINST COLUMN OVERTURNING DURING ERECTION TAKING INTO CONSIDERATION THE ESTIMATED CONSTRUCTION LOADS AND CONDITIONS IN ACCORDANCE W/ OSHA.
2. ANCHOR BOLT EMBEDMENT LENGTHS AND DIAMETER SHALL BE PROVIDED AS SCHEDULED UNLESS NOTED OTHERWISE IN FOUNDATION DETAILS.
3. USE MINIMUM 7,000 PSI HIGH STRENGTH NON-SHRINK GROUT AT 28 DAYS.

BASE PLATE SCHEDULE

2 / S002

SC: 1/8" = 1' - 0"

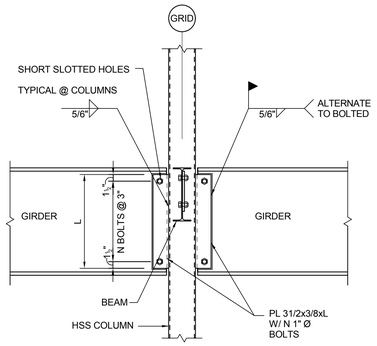

BEAM TO COLUNM CONNECTION SCHEDULE		
BEAM SIZE	N	L, in
W8	2	6
W10, W12, W14	3	9
W16	4	12
W18	5	15
W21	5	18
W24	6	21

TYP. BEAM TO COLUMN CONN.

3 / S002

NO SCALE

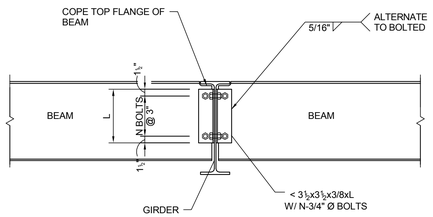

BEAM TO COLUNM CONNECTION SCHEDULE		
BEAM SIZE	N	L, in
W8	2	6
W10, W12, W14	3	9
W16	4	12
W18	5	15
W21	5	18
W24	6	21

TYP. BEAM TO BEAM CONN.

4 / S002

NO SCALE

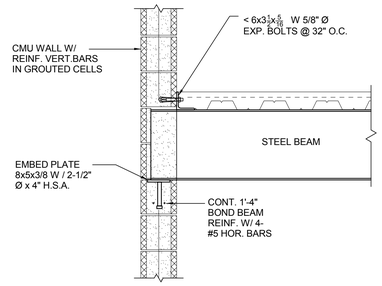

STEEL BEAM EMBED. PL. CONN.

5 / S002

NO SCALE

100% CONSTRUCTION DOCUMENTS

hkn engineers
3800 N. Mesa Street / El Paso, TX 79902
ph. (915) 833-1700 / fax (915) 833-9855 TBPE REG. # F-002039 www.hknengineers.com

REFERENCES – BENCHMARKS

BY	REVISIONS	DATE

ENGINEER SEAL

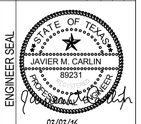

SCALE		DATE	03/03/16
HOR.	SHOWN	DESIGN BY	V.I. E.K. J.C.
VER.	SHOWN	DRAWN BY	C.G.
		CHKD. BY	J.C.
		APPD. BY	J.C.

PROJECT NAME

NORTHGATE TRANSFER CENTER

EL PASO, TEXAS

CITY OF EL PASO

CAPITAL IMPROVEMENT DEPARTMENT

SHEET TITLE

TYPICAL STRUCTURAL STEEL FRAMING DETAILS

SHEET

S002

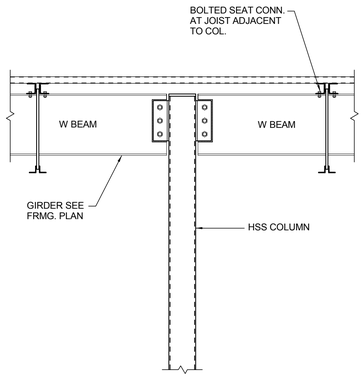

1 S003 JOIST SEAT ADJACENT TO COL.

NO SCALE

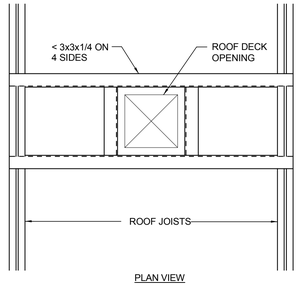

2 S003 ROOF PENETRATION

NO SCALE

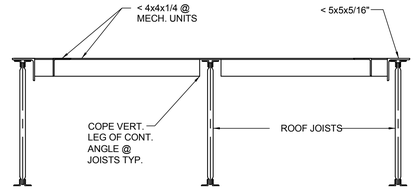

3 S003 MECHANICAL UNIT SUPPORT

NO SCALE

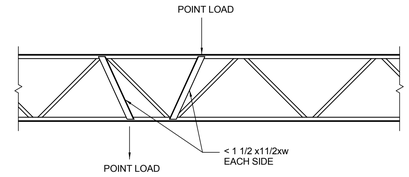

4 S003 JOIST REINF.

NO SCALE

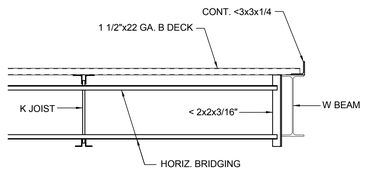

5 S003 BRIDGING @ BEAM

NO SCALE

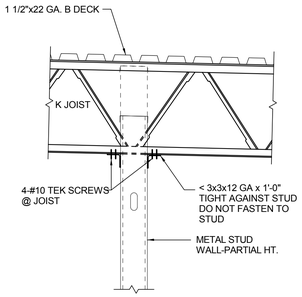

6 S003 MTL. STUD WALL PERP. TO JOIST

NO SCALE

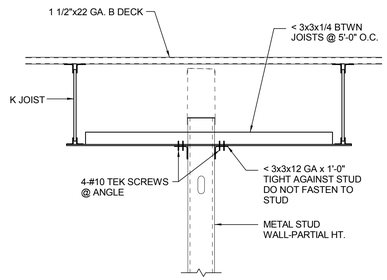

7 S003 MTL. STUD WALL PAR. TO JOIST

NO SCALE

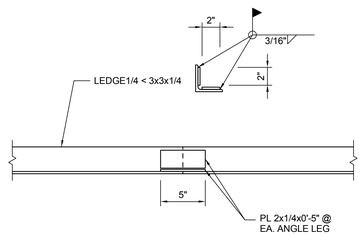

8 S003 LEDGER ANGLE

NO SCALE

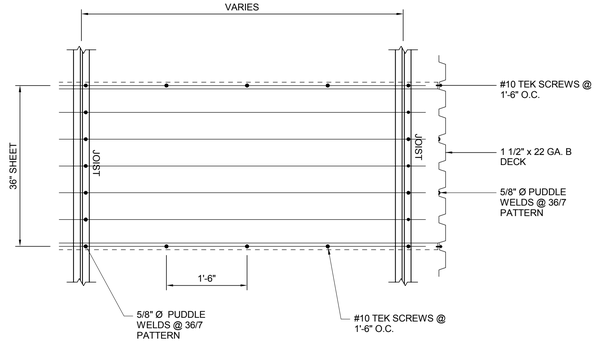

9 S003 DECK FASTENING

NO SCALE

100% CONSTRUCTION DOCUMENTS

REFERENCES – BENCHMARKS

BY	REVISIONS	DATE

ENGINEER SEAL

STATE OF TEXAS
JAVIER M. CARLIN
89231
LICENSED PROFESSIONAL ENGINEER
03/03/16

SCALE
HOR. SHOWN
VER. SHOWN

DATE 03/03/16
DESIGN BY V.I. E.K. J.C.
DRAWN BY I.G. J.C.
CHKD. BY J.C.
APPD. BY J.C.

PROJECT NAME
NORTHGATE TRANSFER CENTER
EL PASO, TEXAS

CITY OF EL PASO
CAPITAL IMPROVEMENT DEPARTMENT

THE CITY OF EL PASO TEXAS

SHEET TITLE
TYPICAL STEEL JOIST FRAMING DETAILS

SHEET
S003

hkn engineers
3600 N. Mesa Drive / El Paso, TX 79902
ph: (915) 532-2190 / fax: (915) 532-3865
Firm REG. # F-002228
www.hknengineers.com

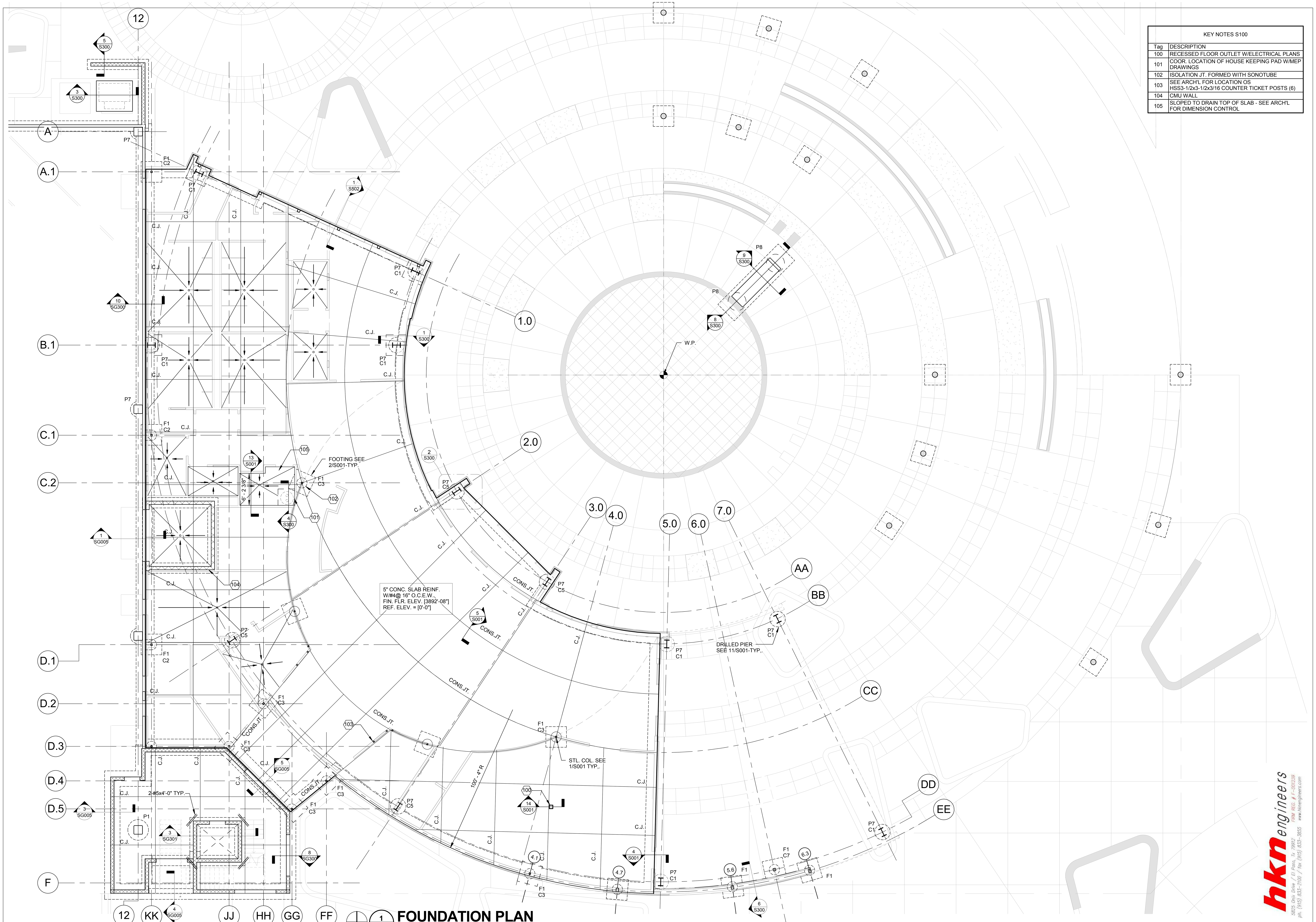

1 FOUNDATION PLAN
S100
SC: 1/8" = 1'-0"

KEY NOTES S100	
Tag	DESCRIPTION
100	RECESSED FLOOR OUTLET W/ELECTRICAL PLANS
101	COOR. LOCATION OF HOUSE KEEPING PAD W/MEP DRAWINGS
102	ISOLATION JT. FORMED WITH SONOTUBE
103	SEE ARCH'L FOR LOCATION OS HSS3-1/2x3-1/2x3/16 COUNTER TICKET POSTS (6)
104	CMU WALL
105	SLOPED TO DRAIN TOP OF SLAB - SEE ARCH'L FOR DIMENSION CONTROL

100% CONSTRUCTION DOCUMENTS

hkn engineers
5825 Onix Drive / El Paso, Tx 79912 FIRM REG. # F-001239
ph. (915) 833-2100 / fax (915) 833-3855 www.hknengineers.com

REFERENCES -- BENCHMARKS

DATE	REVISIONS	BY

ENGINEER SEAL: STATE OF TEXAS, JAVIER M. CARLIN, 89231, REGISTERED PROFESSIONAL ENGINEER, 03/03/16

SCALE
HOR: SHOWN
VER: SHOWN

DATE 03/03/16
DESIGN BY V.L.E.R., J.C.
DRAWN BY E.O.
CHKD. BY J.C.
APPD. BY J.C.

PROJECT NAME
NORTHGATE TRANSFER CENTER
EL PASO, TEXAS

CITY OF EL PASO
CAPITAL IMPROVEMENT DEPARTMENT

THE CITY OF EL PASO TEXAS

SHEET TITLE
FOUNDATION PLAN

SHEET
S100

COLUMN LOCATION SCHEDULE

	X	Y
AA-2.0	- 40' - 0 7/16"	- 22' - 5 13/16"
AA-3.0	- 22' - 6 3/4"	- 39' - 11 7/8"
BB-1.0	- 47' - 11 15/16"	20' - 0 3/16"
BB-1.1	- 51' - 8 3/16"	5' - 9 3/8"
BB-5.0	0' - 7 1/4"	- 51' - 11 15/16"
BB-7.0	22' - 0"	- 47' - 1 3/8"
CC-C.2	- 69' - 11 1/2"	- 20' - 10 1/4"
CC-4.0	- 69' - 11 3/4"	- 20' - 9 1/2"
DD-1.0	- 89' - 10 1/2"	39' - 0 15/16"
DD-2.0	- 83' - 6 1/16"	- 51' - 3 5/8"
DD-3.0	- 51' - 4 5/8"	- 83' - 5 3/8"
DD-5.0	- 0' - 6 7/8"	- 98' - 0"
DD-6.0	21' - 5"	- 95' - 7 9/16"
DD-7.0	42' - 4"	- 88' - 4 5/8"
EE-4.1	- 25' - 10 5/8"	- 96' - 5"
EE-4.7	- 8' - 11 3/8"	- 99' - 5 3/16"
EE-5.6	13' - 3 1/2	- 98'-11 5/16"
EE-6.3	28' - 2 11/16"	- 95' - 9 1/8"

1 S100A FOUNDATION PLAN DIMENSIONS
SC: 1/8" = 1'-0"

100% CONSTRUCTION DOCUMENTS

REFERENCES – BENCHMARKS

ENGINEER SEAL
JAVIER M. CARLIN
89231
LICENSED PROFESSIONAL ENGINEER
STATE OF TEXAS
03/03/16

DATE	REVISIONS	BY

SCALE
HOR: SHOWN
VER: SHOWN

DATE 9/09/16
DESIGN BY V.I. E.K. J.C.
DRAWN BY C.G.
CHKD. BY J.C.
APPD. BY J.C.

PROJECT NAME
NORTHGATE TRANSFER CENTER

CITY OF EL PASO
CAPITAL IMPROVEMENT DEPARTMENT

EL PASO, TEXAS

THE CITY OF EL PASO TEXAS

SHEET TITLE
FOUNDATION PLAN DIMENSIONS

SHEET
S100A

hkn engineers
3005 Dov Drive / El Paso, TX 79902
FIRM REG. # F-001239
ph. (915) 532-2190 / fax (915) 532-3805
www.hknengineers.com

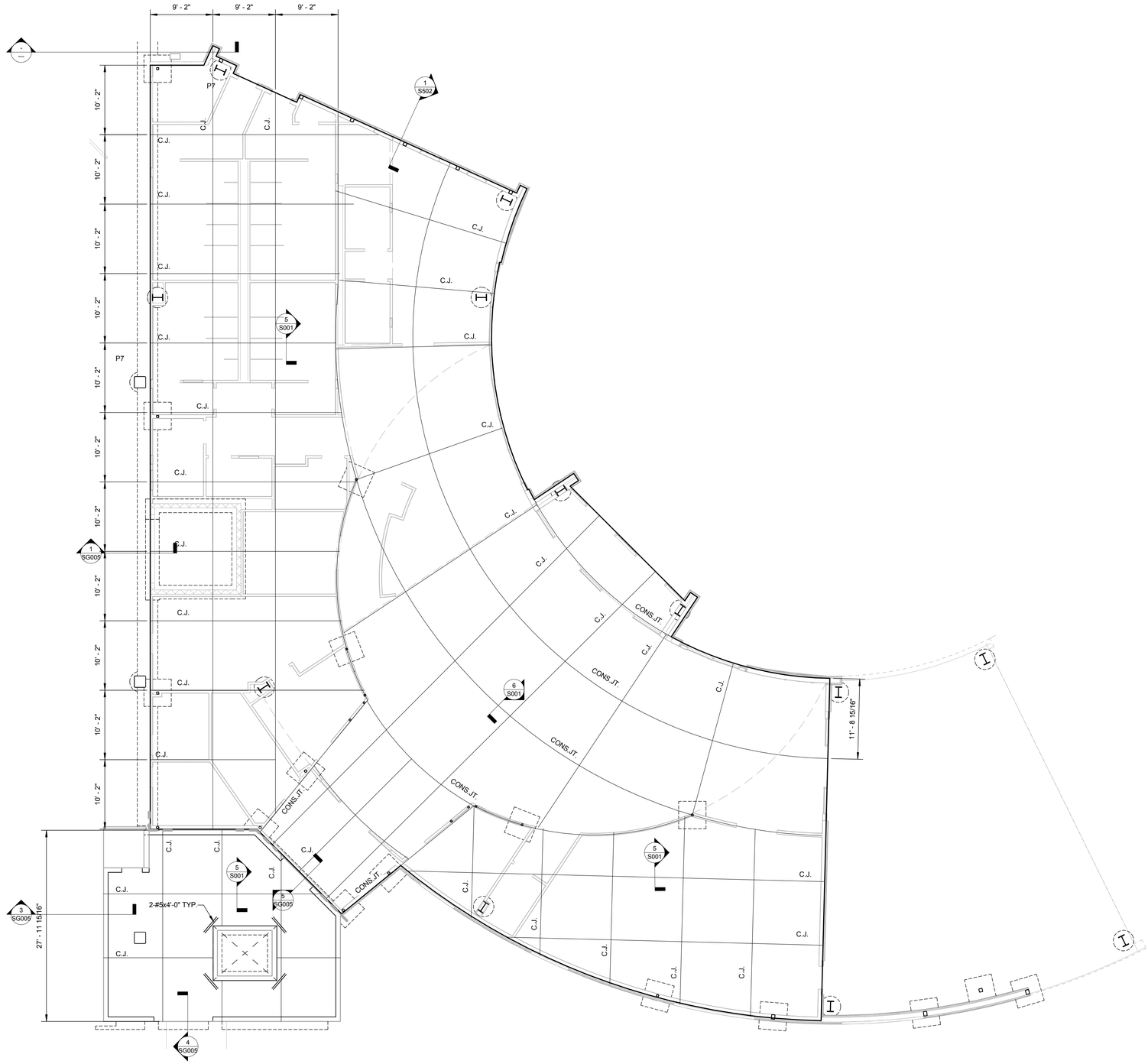

1 S100B CONTROL & CONSTRUCTION JOINT PLAN

SC: 1/8" = 1'-0"

100% CONSTRUCTION DOCUMENTS

REFERENCES – BENCHMARKS

ENGINEER SEAL

STATE OF TEXAS
JAVIER M. CARLIN
89231
PROFESSIONAL ENGINEER
03/03/16

DATE	REVISIONS	BY

SCALE
HOR: SHOWN
VER: SHOWN

DATE 1/22/16
DESIGN BY V.L.E.K. J.C.
DRAWN BY C.G. J.C.
CHKD. BY J.C.
APPD. BY J.C.

PROJECT NAME

NORTHGATE TRANSFER CENTER

EL PASO, TEXAS

CITY OF EL PASO
CAPITAL IMPROVEMENT DEPARTMENT

THE CITY OF EL PASO TEXAS

SHEET TITLE

CONTROL & CONSTRUCTION JOINT PLAN

SHEET
S100B

hkn engineers
5825 Delta Drive / El Paso, TX 79912
ph: (915) 833-2700 / fax: (915) 833-3855
TBPE REG. # F-001039
www.hknengineers.com

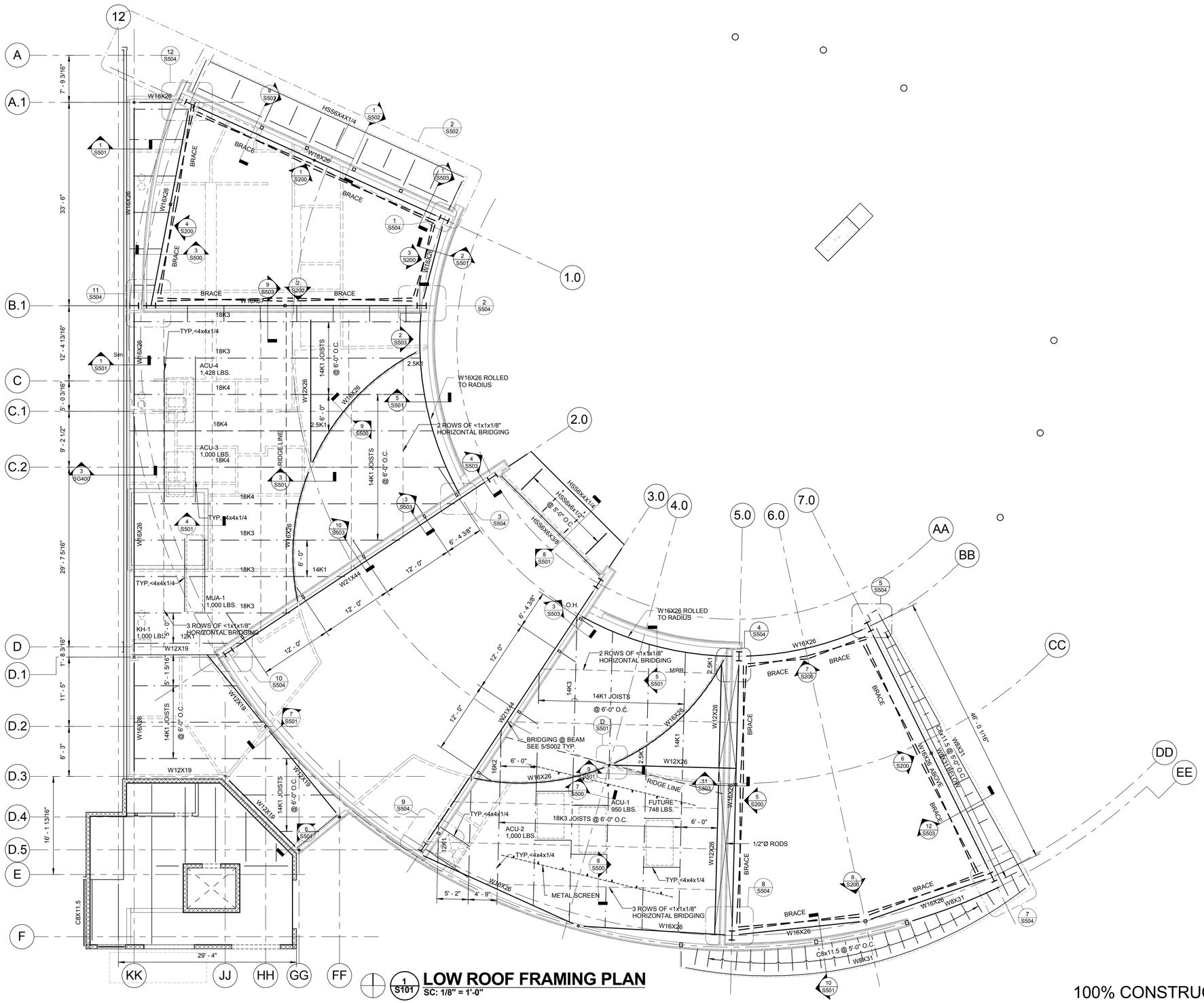

1 S101 LOW ROOF FRAMING PLAN

SC: 1/8" = 1'-0"

100% CONSTRUCTION DOCUMENTS

REFERENCES – BENCHMARKS

ENGINEER SEAL

STATE OF TEXAS
JAVIER M. CARLIN
89231
LICENSED PROFESSIONAL ENGINEER
03/03/16

DATE	REVISIONS	BY

SCALE
HOR: SHOWN
VER: SHOWN

DATE 03/03/16
DESIGN BY V.L.E.K. J.C.
DRAWN BY E.G. J.C.
CHKD. BY J.C.
APPD. BY J.C.

PROJECT NAME

NORTHGATE TRANSFER CENTER

EL PASO, TEXAS

CITY OF EL PASO

CAPITAL IMPROVEMENT DEPARTMENT

THE CITY OF EL PASO TEXAS

hkn engineers
5005 Dyer Drive / El Paso, TX 79922
ph.: (915) 833-2788 / fax: (915) 833-3855
FIRM REG. # F-2402239
www.hknengineers.com

SHEET TITLE

LOW ROOF FRAMING PLAN

SHEET
S101

KEY NOTES S100A	
Tag	DESCRIPTION
106	C6x8.2 IN DECK FLUTES AT STUD WALL
107	2-C6.82 IN DECK FLUTES OR 12x20.7 AT STUD WALL
108	1/2"Ø RODS
109	CONT. C6x8.2 ALONG STUD WALL
110	HSS6x4x1/4 @ MULLIONS
111	HSS6x4x1/4 MULLIOIN @ 12'-0" O.C.
112	CONT. HSS6x4x1/4 CURB BTWN MULLIONS
113	HSS4x2x1/4 POST @ MECH. UNIT SCREEN
114	EDGE OF ROOF LEDGER
115	EDGE OF FLOOR

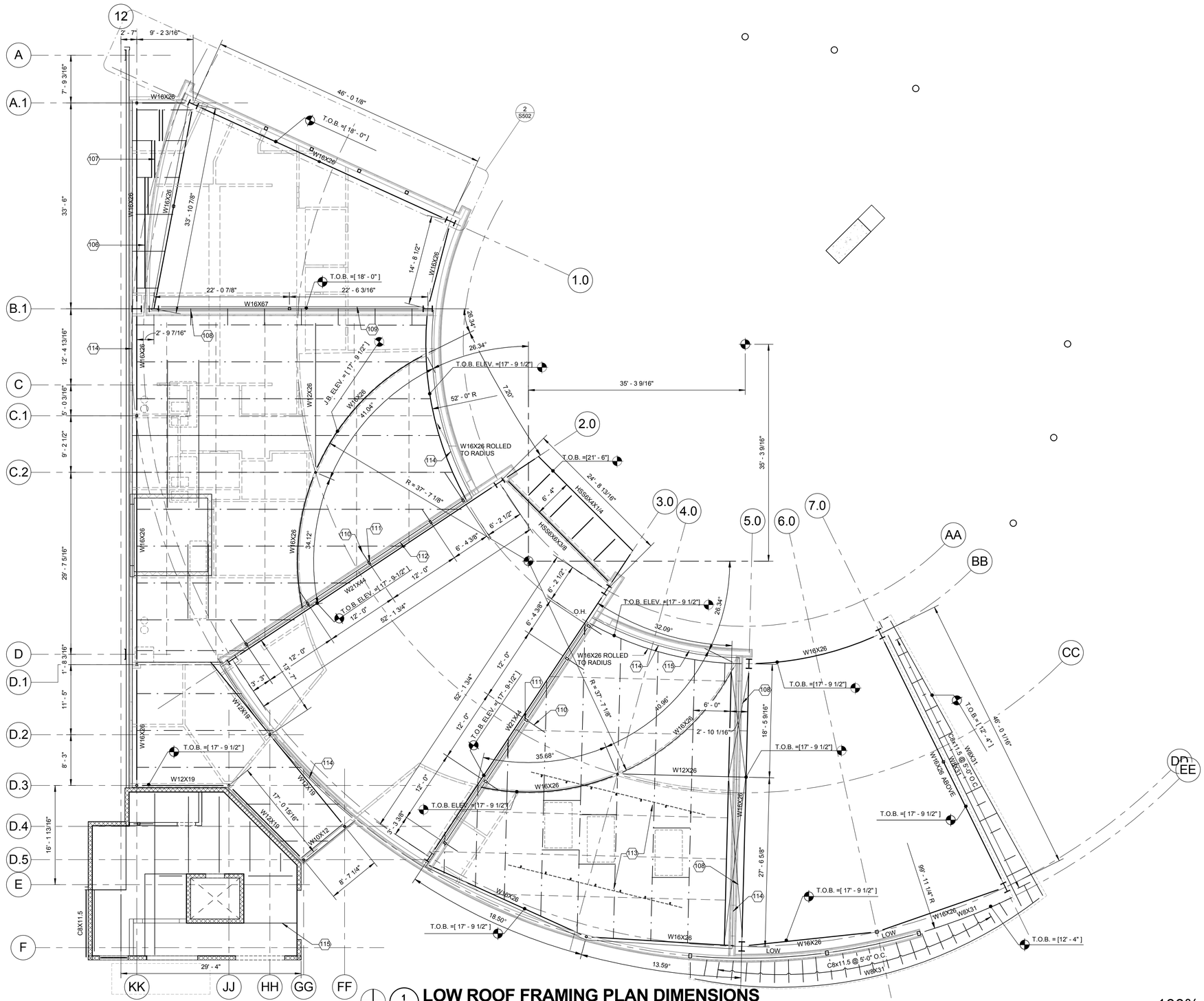

1 S101A LOW ROOF FRAMING PLAN DIMENSIONS

SC: 1/8" = 1'-0"

100% CONSTRUCTION DOCUMENTS

hkn engineers
3800 Jos Drive / El Paso, TX 79922
ph: (915) 585-6000 / fax: (915) 585-3855
TBPE REG. # F-002239
www.hknengineers.com

REFERENCES – BENCHMARKS

BY	REVISIONS	DATE

ENGINEER SEAL

STATE OF TEXAS
JAVIER M. CARLIN
89231
LICENSED PROFESSIONAL ENGINEER
03/03/16

SCALE
HOR: SHOWN
VER: SHOWN

DATE 03/03/16
DESIGN BY V.L.E.K. J.C.
DRAWN BY I.G. J.C.
CHKD. BY J.C.
APPD. BY J.C.

PROJECT NAME
NORTHGATE TRANSFER CENTER

CITY OF EL PASO
CAPITAL IMPROVEMENT DEPARTMENT

THE CITY OF EL PASO TEXAS

SHEET TITLE
LOW ROOF FRAMING PLAN DIMENSIONS

SHEET
S101A

EL PASO, TEXAS

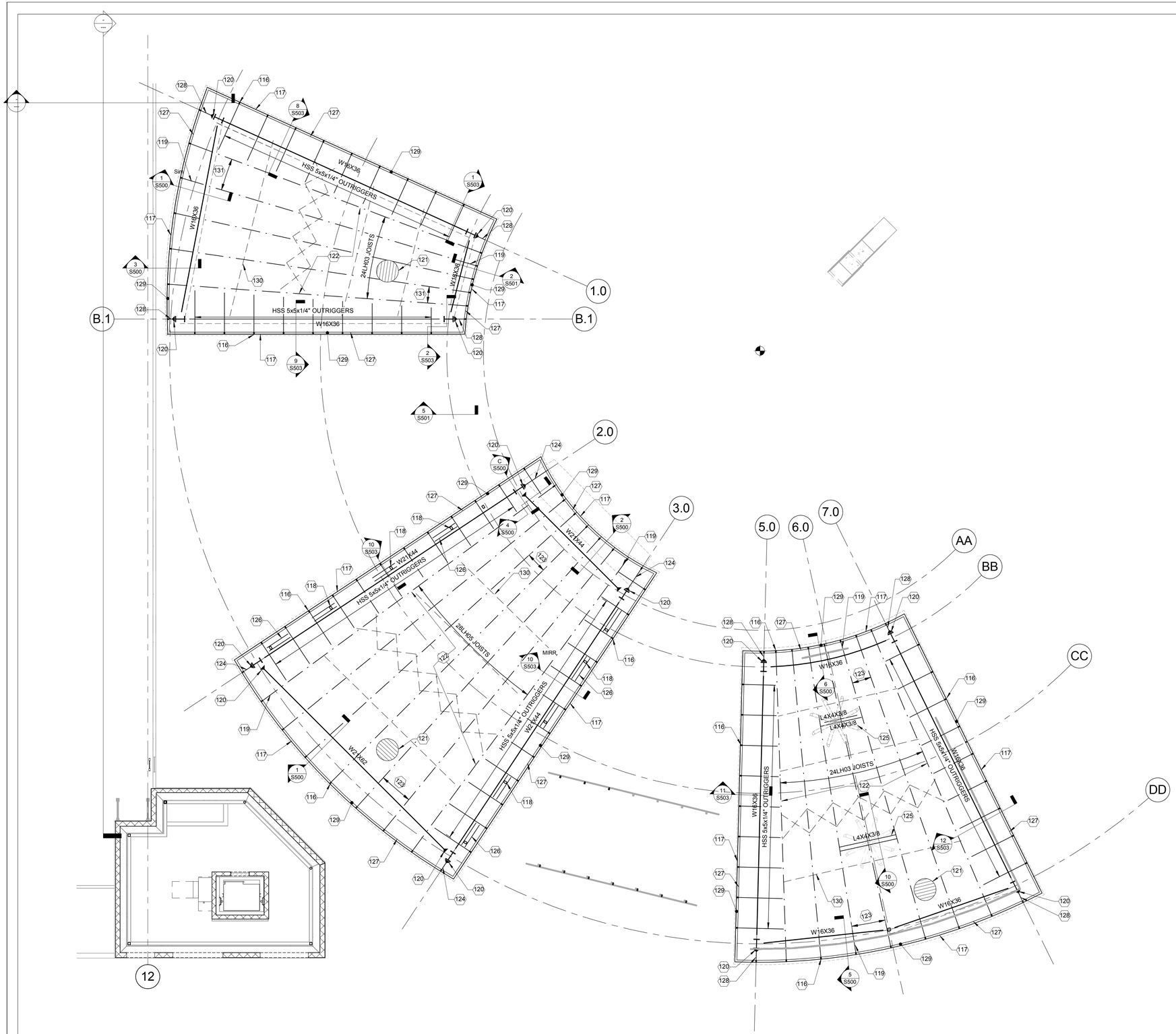

KEY NOTES S102	
Tag	DESCRIPTION
116	HSS4x2x1/4 PARAPET STUB @ EACH OF OUTRIGGERS/TOP CHORD EXTENSION
117	CONT.<5x3-1/2x5/16 LLV ANGLE
118	HSS6x4x1/4 MULLION BELOW
119	TOP CHORD EXTENSION
120	MOMENT CONNECTION
121	1-1/2"x22 GA. "B" DECK PERPENDICULAR TO MIDDLE JOISTS
122	JOIST DISTRIBUTED RADIALLY
123	8 EQUAL SPACES
124	W21x44 GIRDER STUB + HSS5x5 OUTRIGGER SEE DETAIL
125	L4X4 SUPPORTED AT JOIST BOTT. CHORDS
126	<5x3-1/2x5'-0" LLH - NOT WELDED AGAINST MULLION EACH SIDE
127	CONT. 3x3x1/4
128	W16x36 STUB
129	PARAPET INFILL W/4"x18 GA. CSJ STUDS @ 16" O.C.
130	3 ROWS OF HORIZONTAL <1-1/4x1-1/4x1/8" BRIDGING + 1 ROW OF DIAG. <1-1/4x1-1/4x1/8" BRIDGING.
131	6 EQUAL SPACES

1 S102 HIGH ROOF FRAMING PLAN

SC: 1/8" = 1'-0"

100% CONSTRUCTION DOCUMENTS

REFERENCES – BENCHMARKS

BY	REVISIONS	DATE

ENGINEER SEAL

STATE OF TEXAS
JAVIER M. CARLIN
89231
LICENSED PROFESSIONAL ENGINEER
03/03/16

SCALE
HOR. SHOWN
VER. SHOWN

DATE 03/03/16
DESIGN BY V.L.E.K. J.C.
DRAWN BY C.G.
CHKD. BY J.C.
APPD. BY J.C.

PROJECT NAME

NORTHGATE TRANSFER CENTER

EL PASO, TEXAS

CITY OF EL PASO
CAPITAL IMPROVEMENT DEPARTMENT

THE CITY OF EL PASO TEXAS

SHEET TITLE

HIGH ROOF FRAMING

SHEET
S102

hkn engineers
300 Glory Drive / El Paso, TX 79912
ph. (915) 833-1700 / fax (915) 833-1855
TBPE REG. # F-002039
www.hknengineers.com

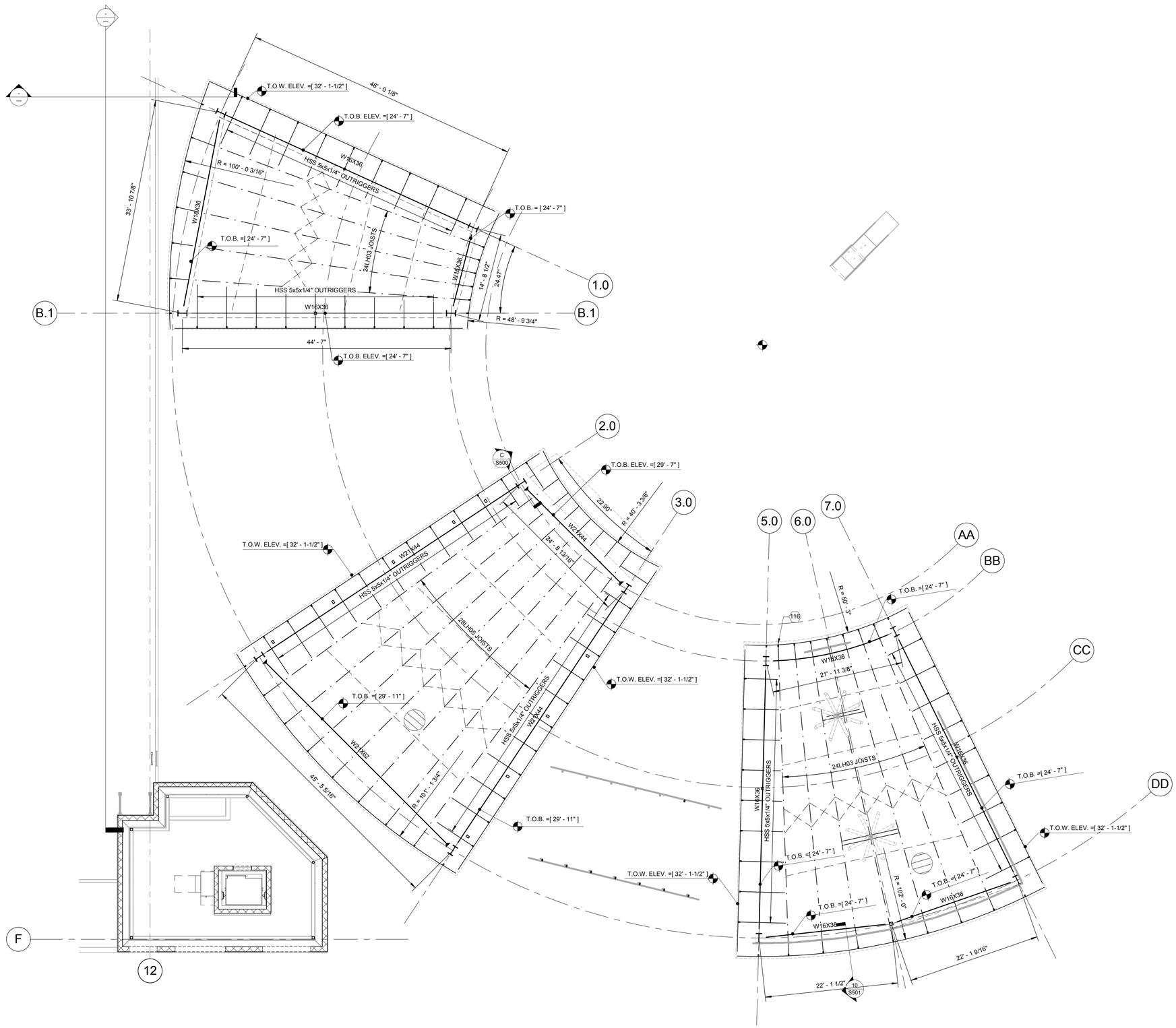

HIGH ROOF FRAMING PLAN DIMENSIONS

1 / S102A

SC: 1/8" = 1'-0"

100% CONSTRUCTION DOCUMENTS

REFERENCES – BENCHMARKS

BY	REVISIONS	DATE

ENGINEER SEAL

STATE OF TEXAS
JAVIER M. CARLIN
89231
LICENSED PROFESSIONAL ENGINEER
03/03/16

SCALE
HOR: SHOWN
VER: SHOWN

DATE 03/03/16
DESIGN BY V, I, E K, J.C.
DRAWN BY J.C.
CHKD. BY J.C.
APPD. BY J.C.

PROJECT NAME
NORTHGATE TRANSFER CENTER
EL PASO, TEXAS

CITY OF EL PASO
CAPITAL IMPROVEMENT DEPARTMENT

SHEET TITLE
HIGH ROOF FRAMING DIMENSIONS

SHEET
S102A

hkn engineers
3609 Dyer Drive / El Paso, TX 79904
ph: (915) 532-2100 / fax: (915) 532-3655
Firm REG. # F-002228
www.hknengineers.com

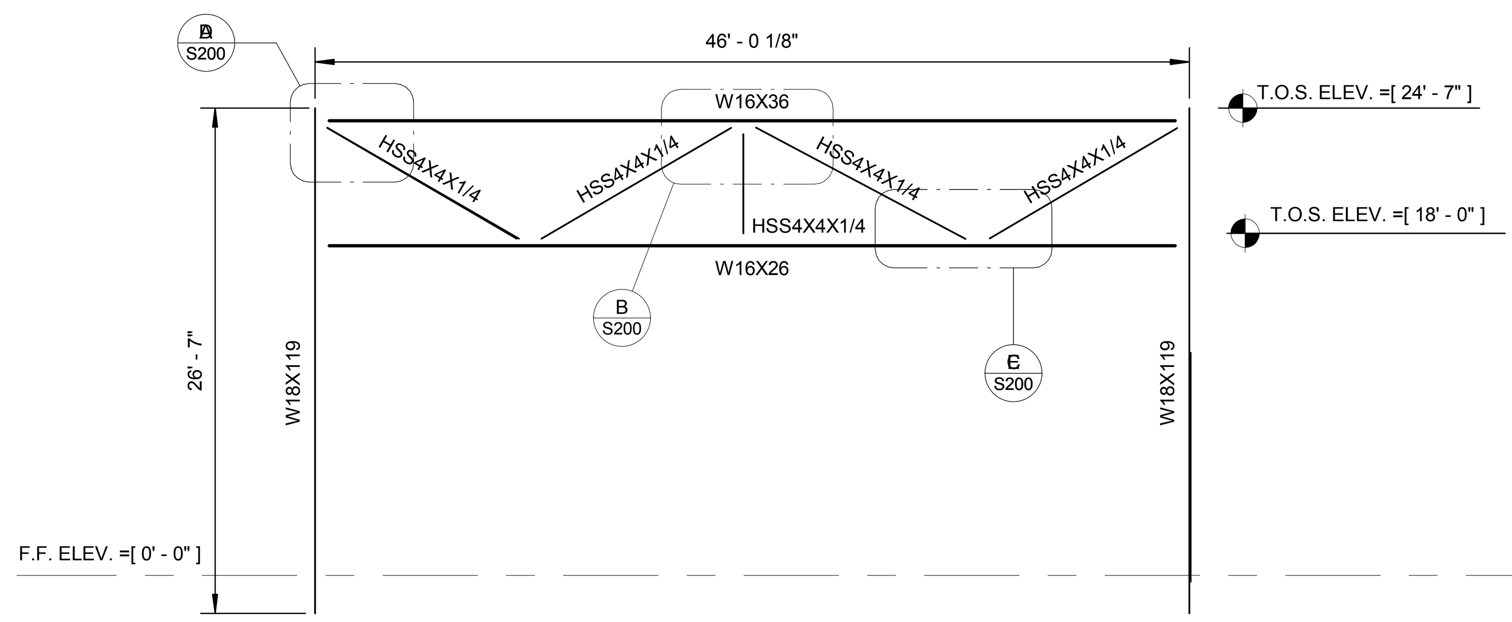

BRACE #1
1 S200 SC: 1/8" = 1'-0"

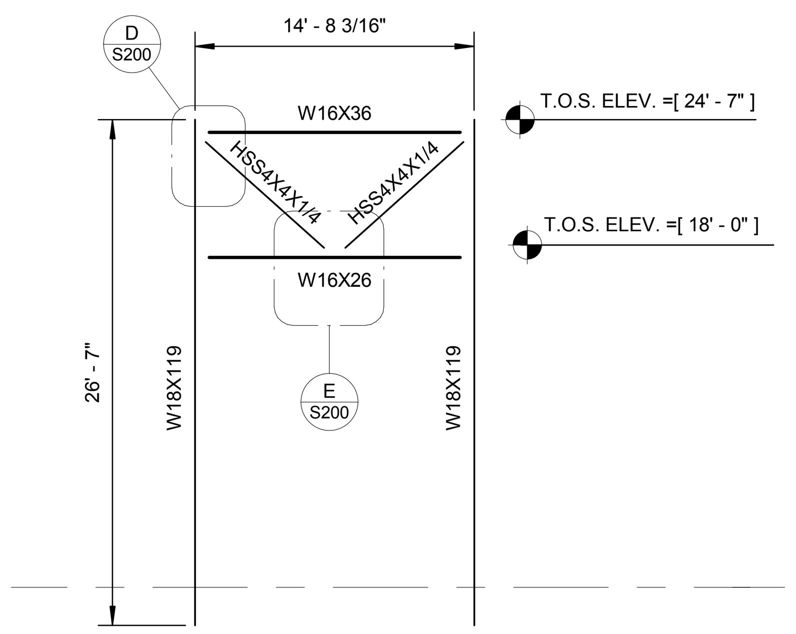

BRACE #2
3 S200 SC: 1/8" = 1'-0"

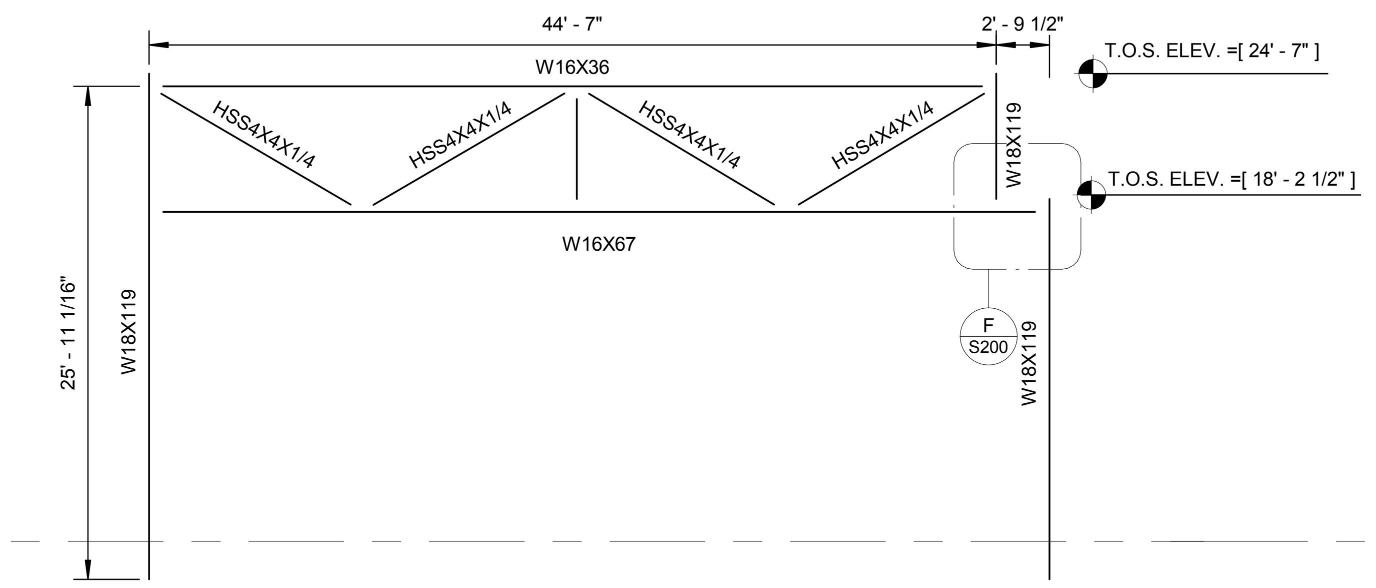

BRACE #3
2 S200 SC: 1/8" = 1'-0"

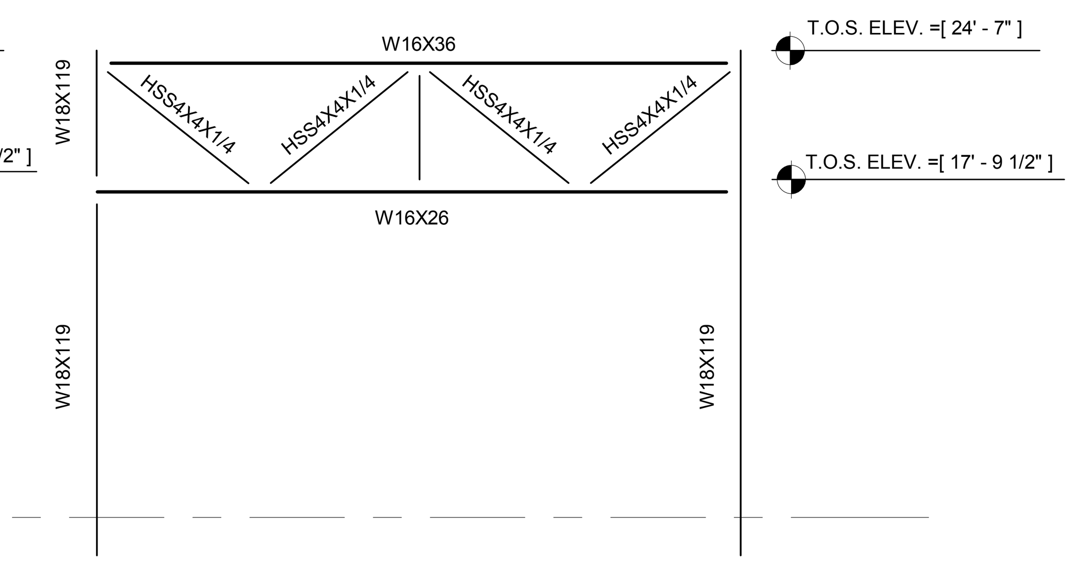

BRACE #4
4 S200 SC: 1/8" = 1'-0"

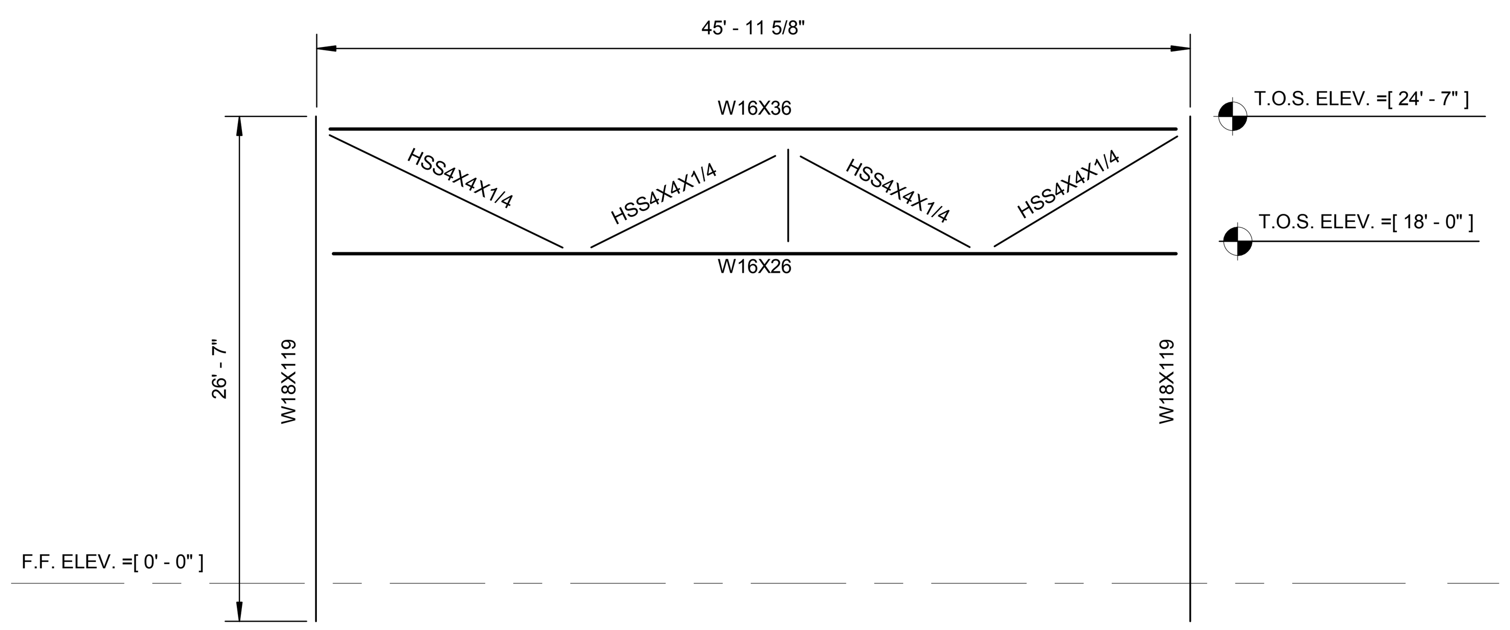

BRACE #5
5 S200 SC: 1/8" = 1'-0"

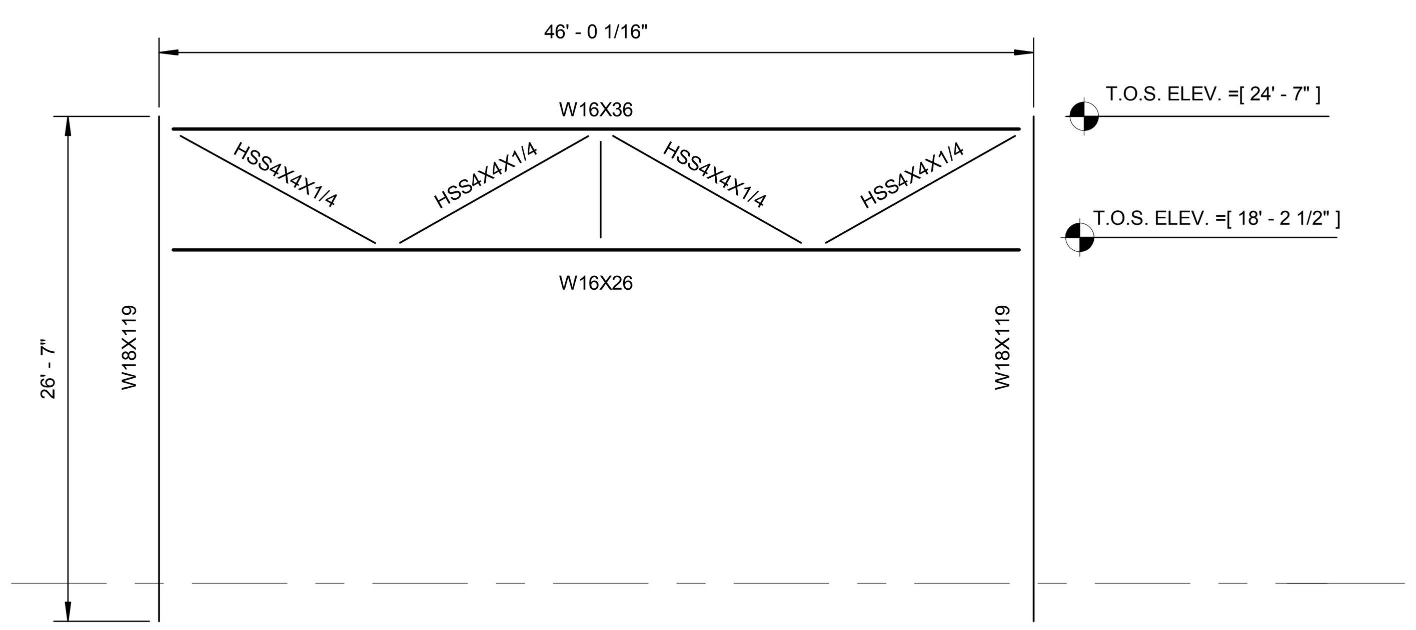

BRACE #6
6 S200 SC: 1/8" = 1'-0"

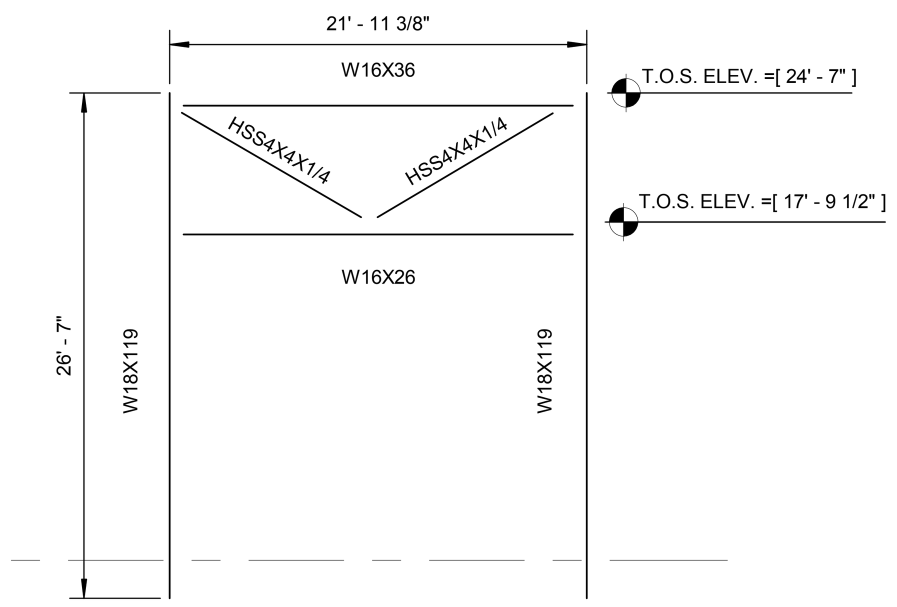

BRACE #7
7 S200 SC: 1/8" = 1'-0"

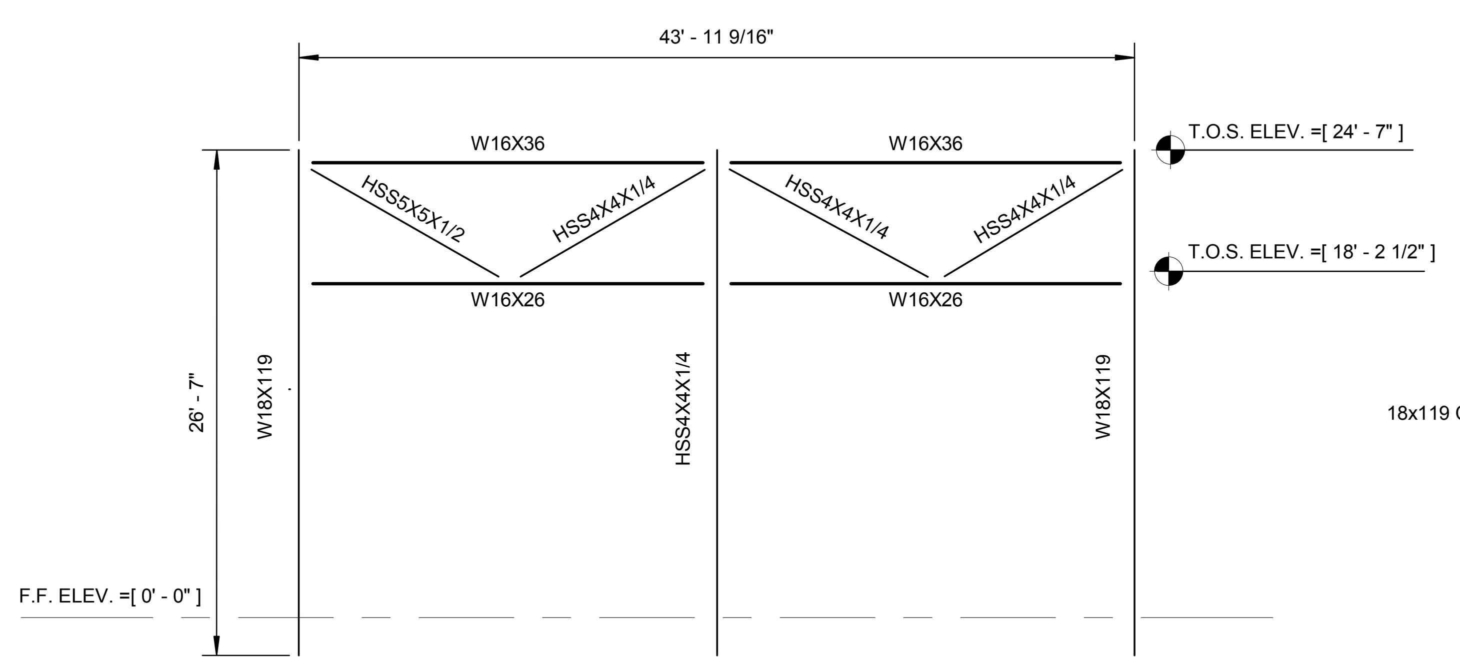

BRACE #8
8 S200 SC: 1/8" = 1'-0"

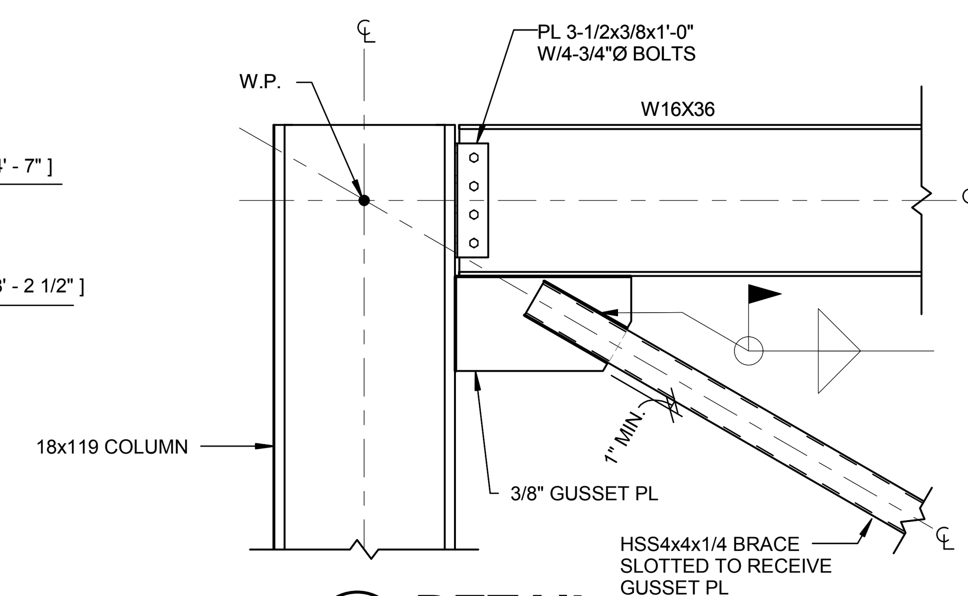

DETAIL
A S200 SC: 3/4" = 1'-0"

DETAIL
D S200 SC: 3/4" = 1'-0"

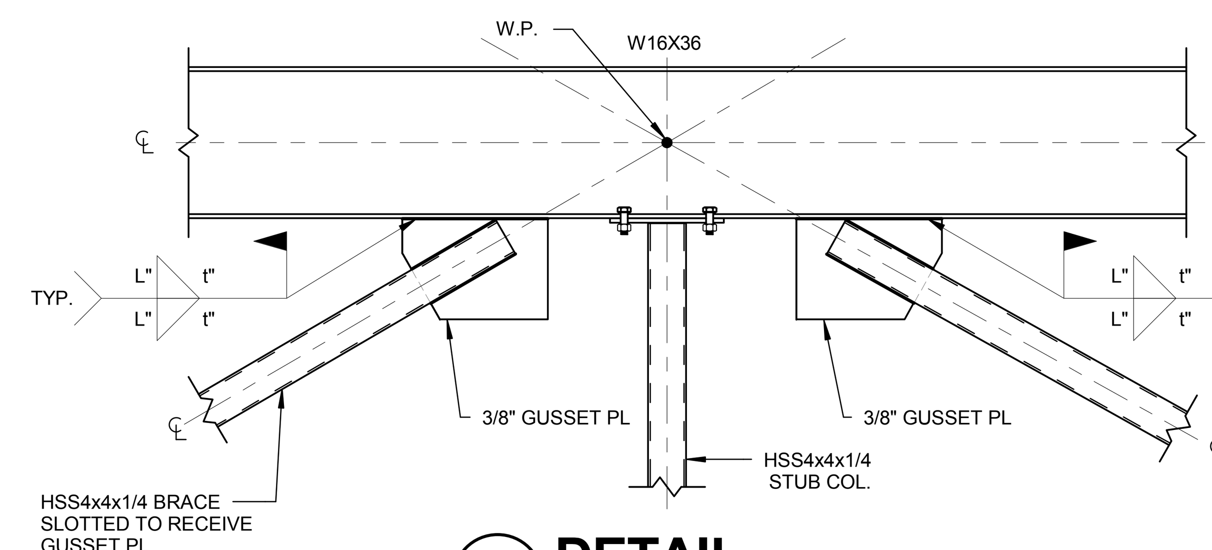

DETAIL
B S200 SC: 3/4" = 1'-0"

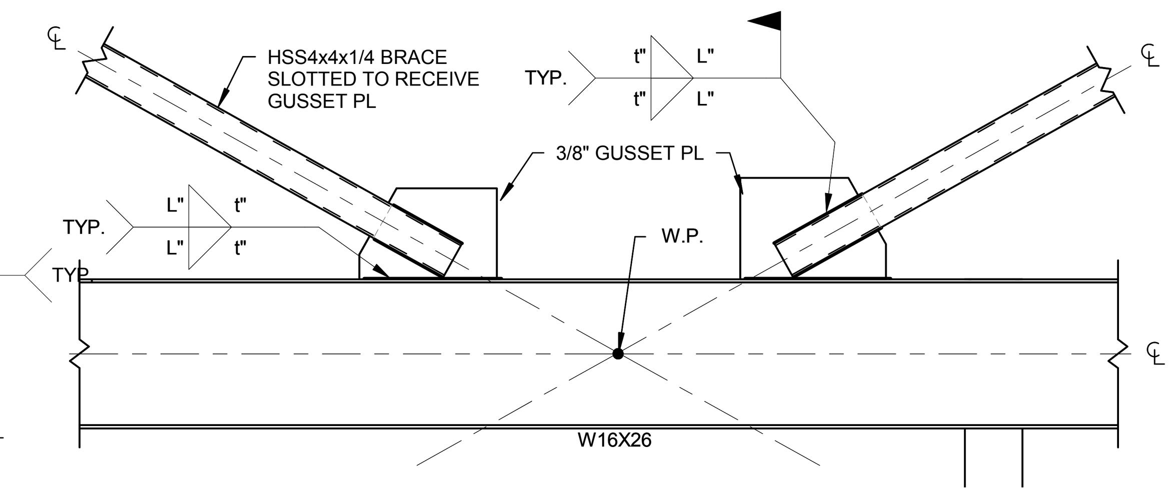

DETAIL
C S200 SC: 3/4" = 1'-0"

DETAIL
E S200 SC: 3/4" = 1'-0"

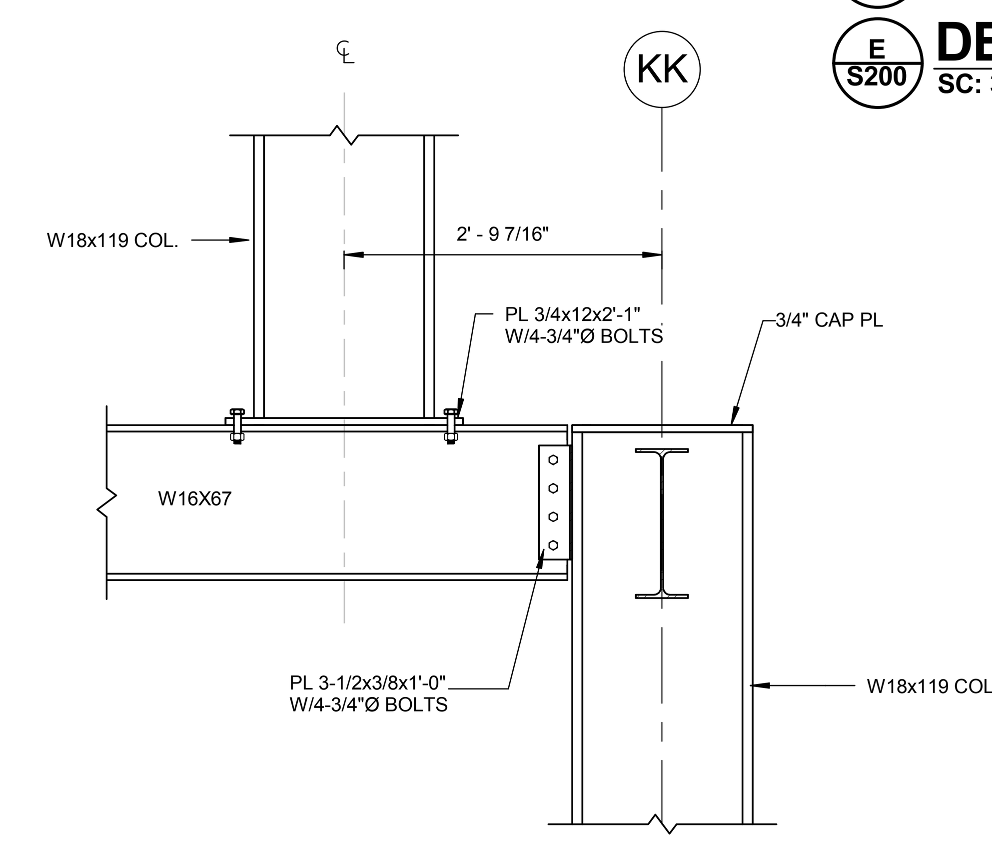

DETAIL
F S200 SC: 3/4" = 1'-0"

BRACE SCHEDULE

DETAIL	GUSSET ELEMENT	GUSSET TO BRACE WELD		GUSSET TO BEAM WELD		GUSSET TO COL. WELD		BEAM TO COL. CONNECTION	
	PL SIZE	THICKNESS, t (IN)	LENGTH, L (IN)	THICKNESS, t (IN)	LENGTH, L (IN)	THICKNESS, t (IN)	LENGTH, L (IN)	PL SIZE	BOLTS
A/S200	10"x3/8"x1'-8"	1/4"	3" ALL SIDES	1/4"	12" ALL SIDES	1/4"	6" ALL SIDES	3 1/2"x3/8"x1'-6"	4-3/4"Ø A325N
B/S200	10"x3/8"x1'-2"	1/4"	3" ALL SIDES	1/4"	8" ALL SIDES	----	----	7"x1/2"x0'-10"	4-3/4"Ø A325N
C/S200	10"x3/8"x1'-2"	1/4"	3" ALL SIDES	1/4"	8" ALL SIDES	----	----	----	----
D/S200	10"x3/8"x0'-10"	1/4"	3" ALL SIDES	1/4"	6" ALL SIDES	1/4"	6" ALL SIDES	3 1/2"x3/8"x1'-6"	4-3/4"Ø A325N
E/S200	10"x3/8"x1'-0"	1/4"	3" ALL SIDES	1/4"	7" ALL SIDES	----	----	----	----

hkn engineers
3825 Dyer Drive / El Paso, Tx. 79912 FIRM REG. # F-000238
ph. (915) 833-2100 / fax (915) 833-3855 www.hknengineers.com

100% CONSTRUCTION DOCUMENTS

REFERENCES – BENCHMARKS | DATE | REVISIONS | BY

ENGINEER SEAL
STATE OF TEXAS
JAVIER M. CARLIN
89231
PROFESSIONAL ENGINEER
03/03/16

SCALE HOR: SHOWN VER: SHOWN
DATE: DESIGN BY V.I. E.R. J.C. DRAWN BY E.O. CHKD. BY J.C. APPD. BY J.C.

PROJECT NAME
NORTHGATE TRANSFER CENTER
EL PASO, TEXAS

CITY OF EL PASO
CAPITAL IMPROVEMENT DEPARTMENT

SHEET TITLE
VERTICAL BRACED FRAME ELEVATIONS

SHEET
S200

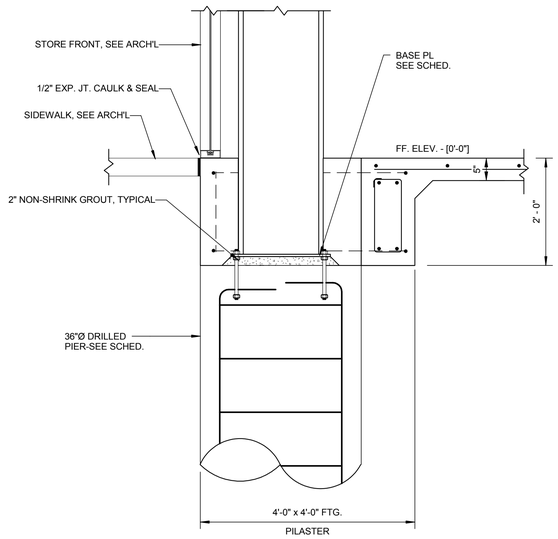

1/S300 DETAIL
SC: 3/4" = 1'-0"

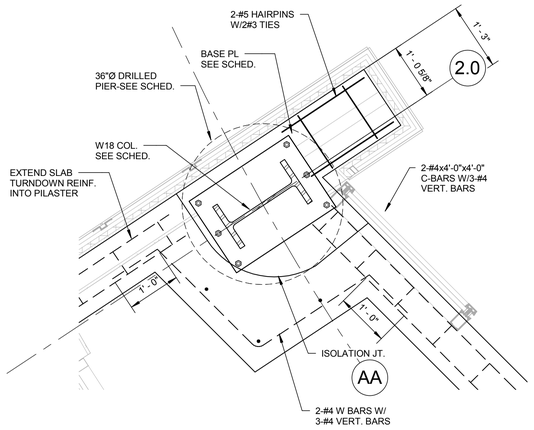

2/S300 DETAIL
SC: 3/4" = 1'-0"

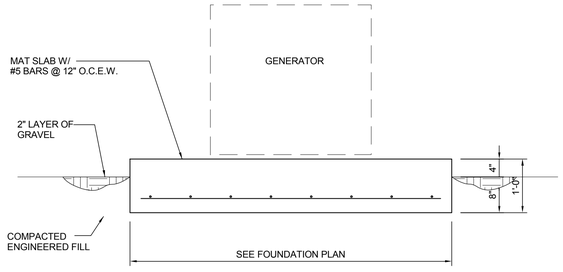

3/S300 Transformer Pad
SC: 3/4" = 1'-0"

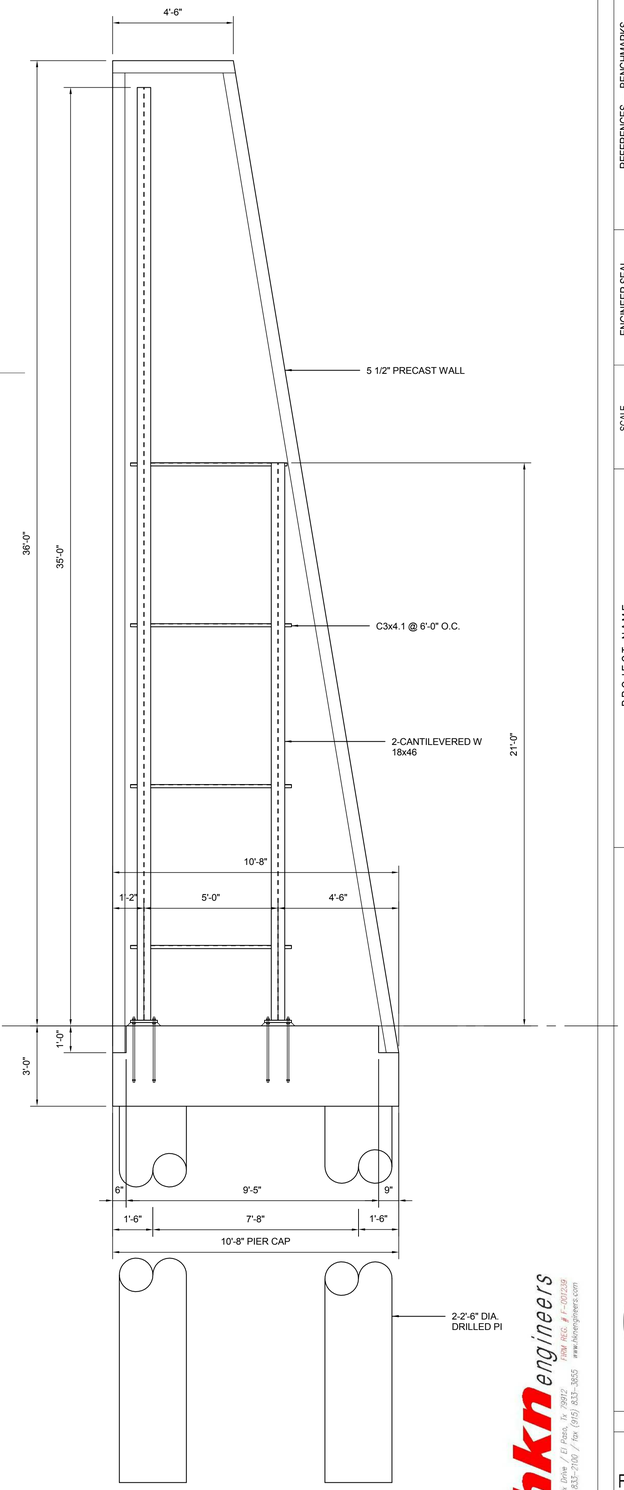

8/S300 FREE STANDING WALL SECTION
SC: 3/8" = 1'-0"

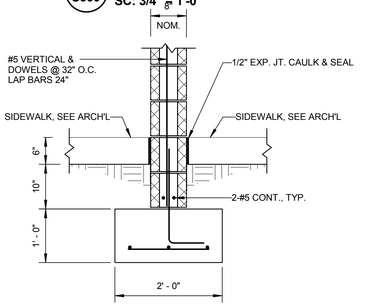

5/S300 TYP. CMU
SC: 3/4" = 1'-0"

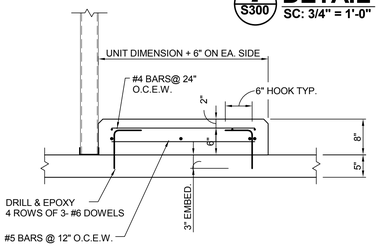

4/S300 House Keeping Pad
SC: 3/4" = 1'-0"

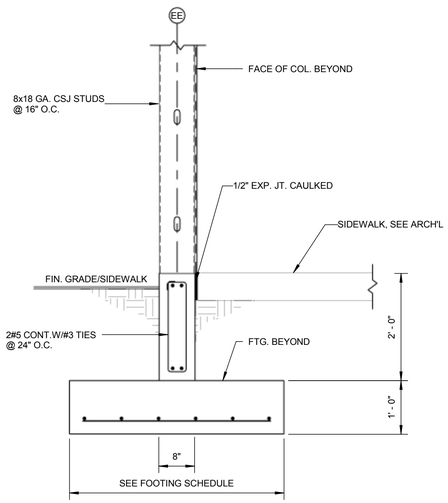

6/S300 DETAIL
SC: 3/4" = 1'-0"

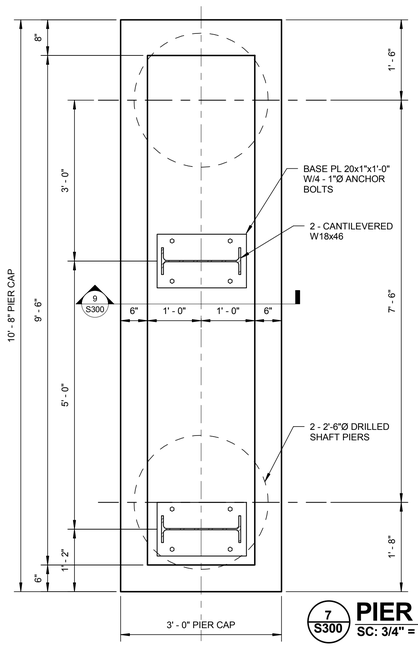

7/S300 PIER CAP
SC: 3/4" = 1'-0"

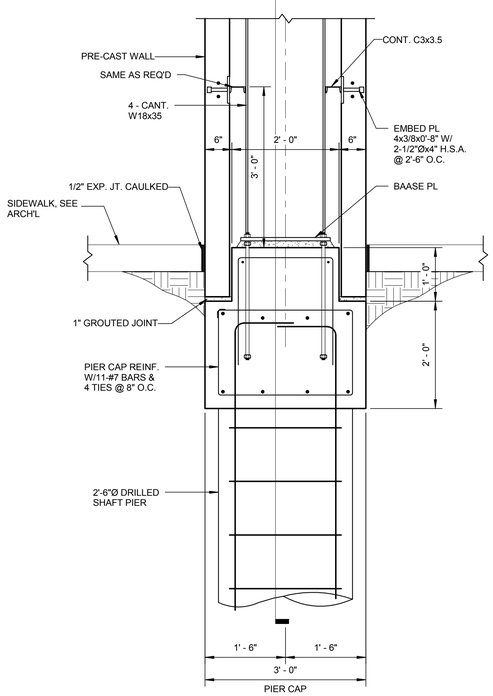

9/S300 PIER CAP SECTION
SC: 3/4" = 1'-0"

hkn engineers
3005 Dyer Drive / El Paso, TX 79932
ph: (915) 833-2080 / fax: (915) 833-3855
TBPE REG. # F-001239
www.hknengineers.com

100% CONSTRUCTION DOCUMENTS

REFERENCES – BENCHMARKS

BY	REVISIONS	DATE

ENGINEER SEAL

STATE OF TEXAS
JAVIER M. CARLIN
89231
LICENSED PROFESSIONAL ENGINEER
03/03/16

SCALE	
HOR.	SHOWN
VER.	SHOWN

DATE	03/03/16
DESIGN BY	V.I. E.K. J.C.
DRAWN BY	J.C.
CHKD. BY	J.C.
APPD. BY	J.C.

PROJECT NAME

NORTHGATE TRANSFER CENTER

EL PASO, TEXAS

CITY OF EL PASO
CAPITAL IMPROVEMENT DEPARTMENT

THE CITY OF EL PASO TEXAS

SHEET TITLE

FOUNDATION DETAILS

SHEET
S300

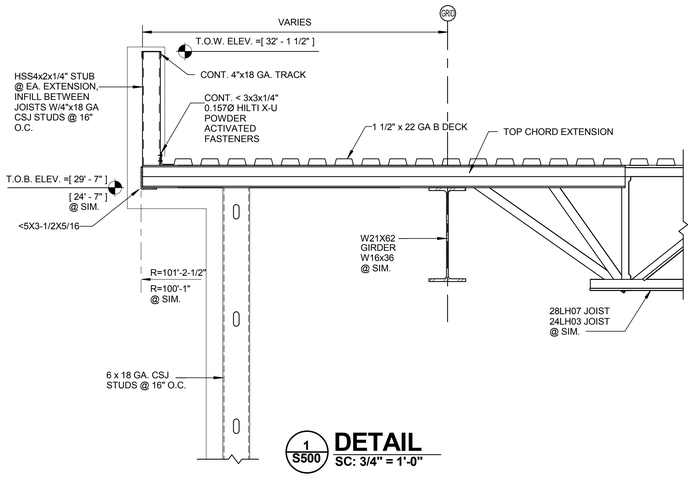

1 S500 **DETAIL**
SC: 3/4" = 1'-0"

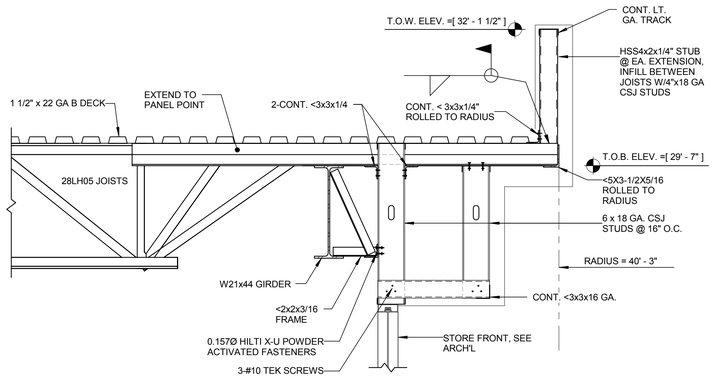

2 S500 **DETAIL**
SC: 3/4" = 1'-0"

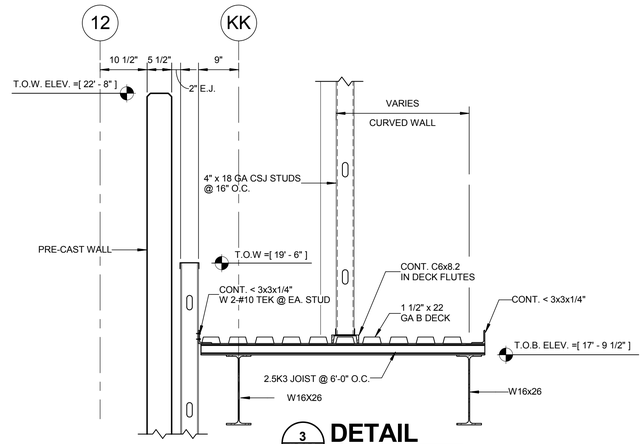

3 S500 **DETAIL**
SC: 3/4" = 1'-0"

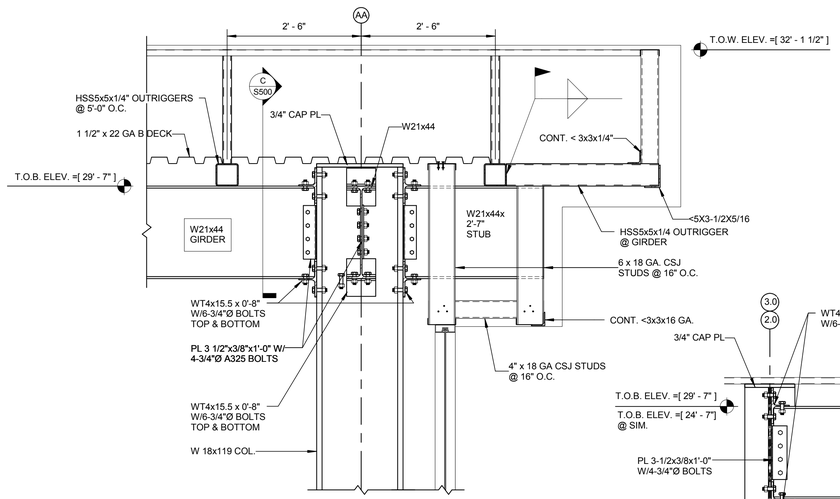

4 S500 **DETAIL**
SC: 3/4" = 1'-0"

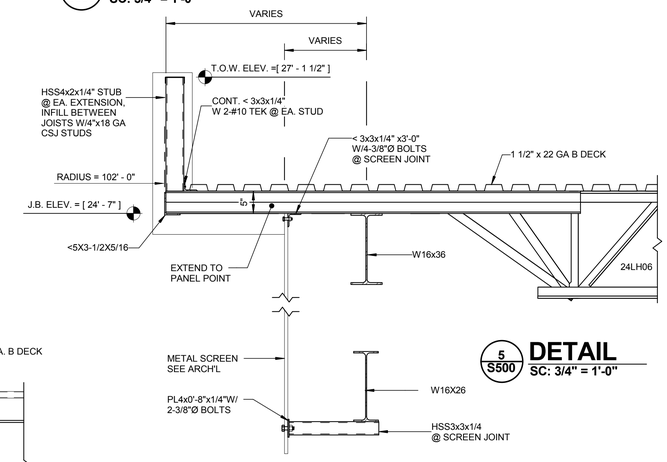

5 S500 **DETAIL**
SC: 3/4" = 1'-0"

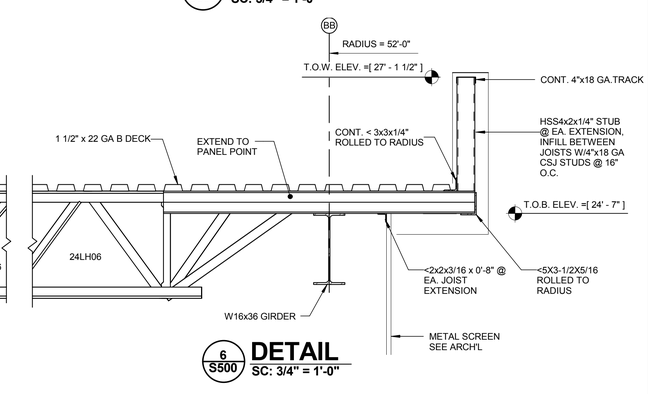

6 S500 **DETAIL**
SC: 3/4" = 1'-0"

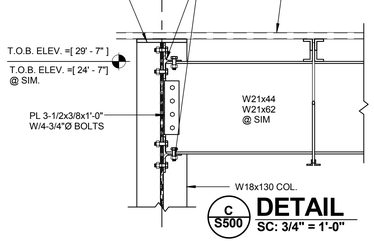

C S500 **DETAIL**
SC: 3/4" = 1'-0"

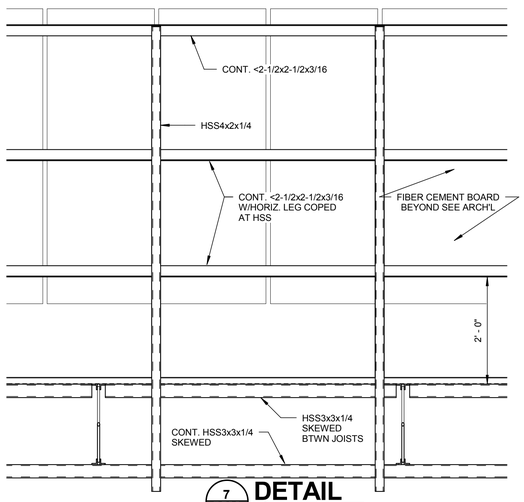

7 S500 **DETAIL**
SC: 3/4" = 1'-0"

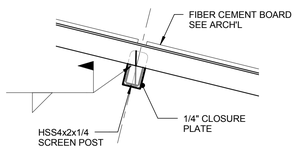

B S500 **DETAIL**
SC: 1 1/2" = 1'-0"

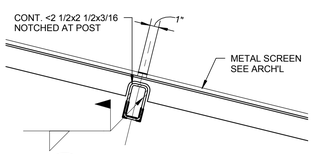

A S500 **DETAIL**
SC: 1 1/2" = 1'-0"

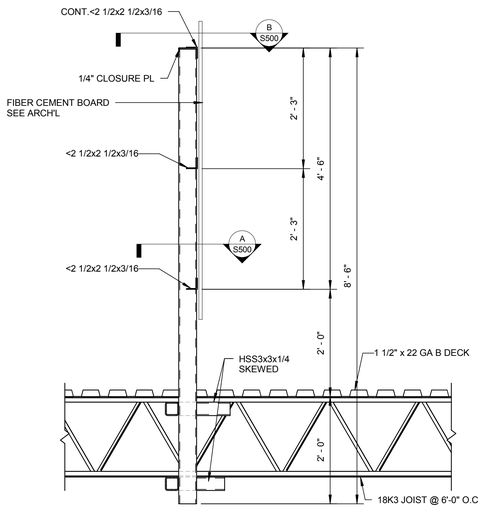

8 S500 **DETAIL**
SC: 3/4" = 1'-0"

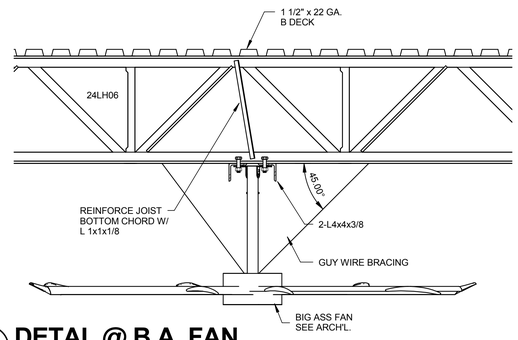

10 S500 **DETAL @ B.A. FAN**
SC: 3/4" = 1'-0"

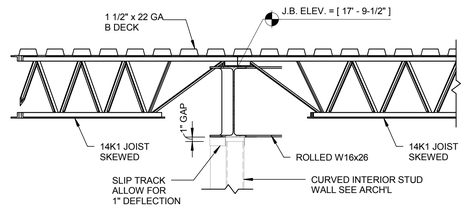

9 S500 **DETAIL**
SC: 3/4" = 1'-0"

100% CONSTRUCTION DOCUMENTS

REFERENCES – BENCHMARKS

BY	REVISIONS	DATE

ENGINEER SEAL

STATE OF TEXAS
JAVIER M. CARLIN
89231
LICENSED PROFESSIONAL ENGINEER
03/03/16

SCALE HOR.	SHOWN
VER.	SHOWN
DATE	03/03/16
DESIGN BY	V.L/ E.K. /J.C.
DRAWN BY	E.G.
CHKD. BY	J.C.
APPD. BY	J.C.

PROJECT NAME

NORTHGATE TRANSFER CENTER

EL PASO, TEXAS

CITY OF EL PASO
CAPITAL IMPROVEMENT DEPARTMENT

THE CITY OF EL PASO TEXAS

SHEET TITLE

ROOF FRAMING DETAILS

SHEET
S500

hkn engineers
3006 Ohio Drive / El Paso, TX 79912
ph: (915) 532-2100 / fax (915) 532-3655
TBPE REG. # F-000209
www.hknengineers.com

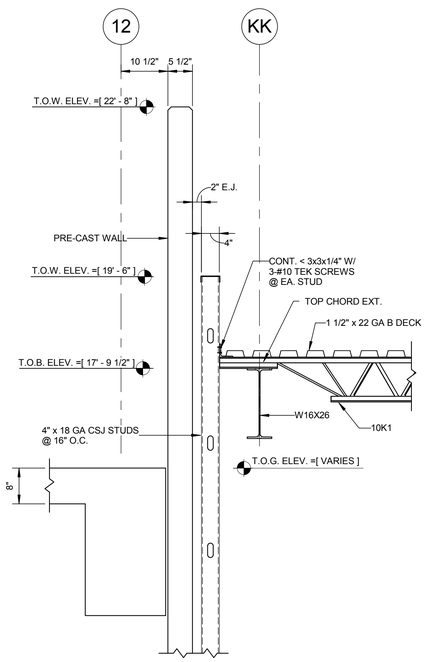

1 S501 DETAIL
SC: 3/4" = 1'-0"

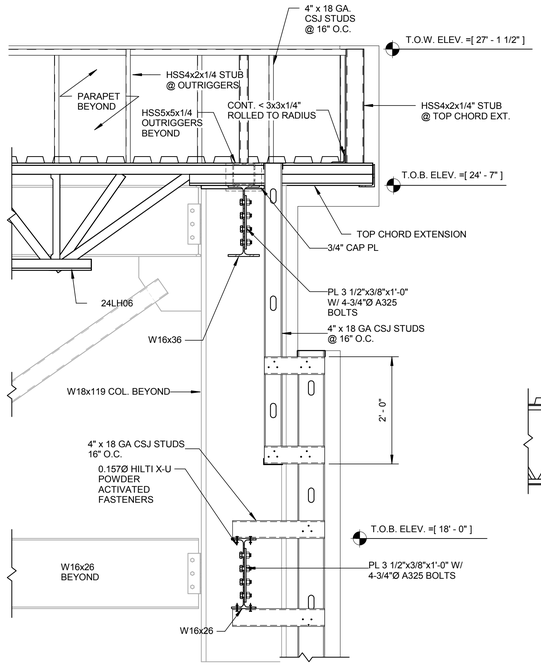

2 S501 DETAIL
SC: 3/4" = 1'-0"

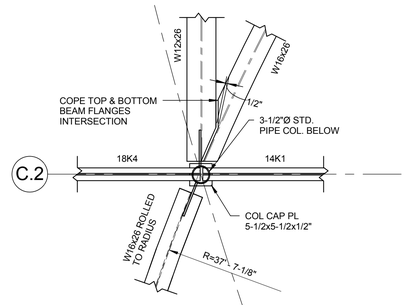

A S501 PLAN VIEW
SC: 3/4" = 1'-0"

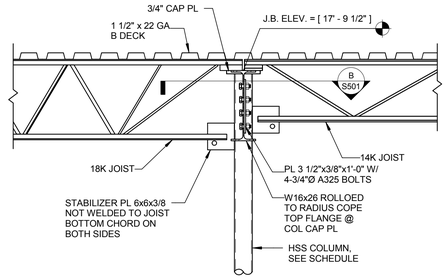

3 S501 DETAIL
SC: 3/4" = 1'-0"

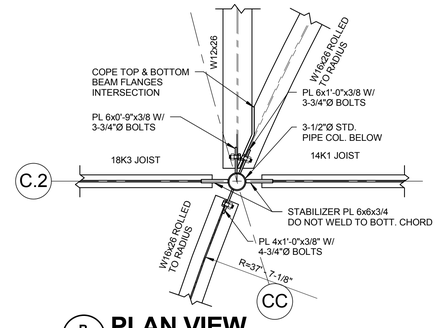

B S501 PLAN VIEW
SC: 3/4" = 1'-0"

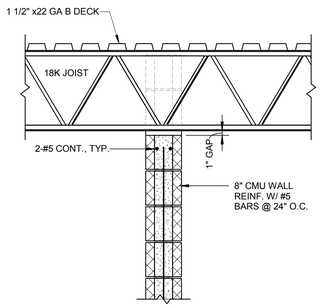

4 S501 DETAIL
SC: 3/4" = 1'-0"

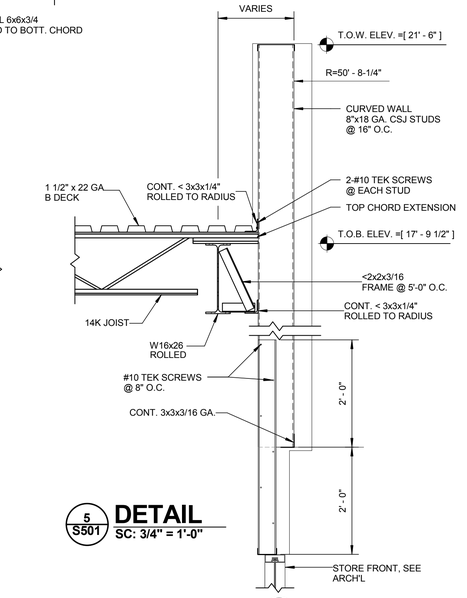

5 S501 DETAIL
SC: 3/4" = 1'-0"

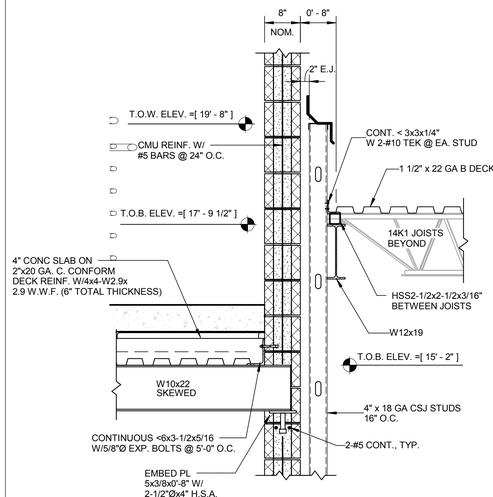

6 S501 DETAIL
SC: 3/4" = 1'-0"

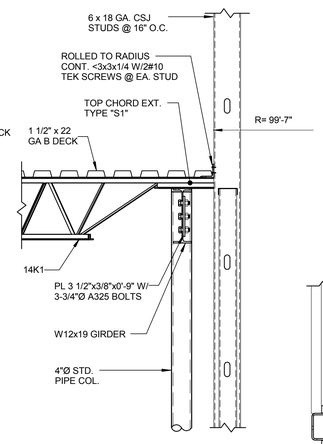

7 S501 DETAIL
SC: 3/4" = 1'-0"

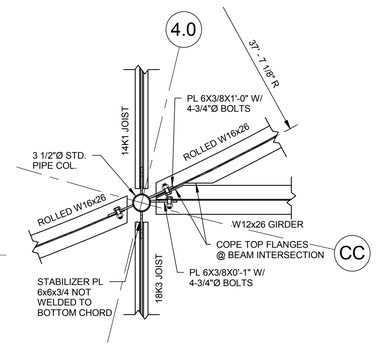

D S501 PLAN VIEW
SC: 3/4" = 1'-0"

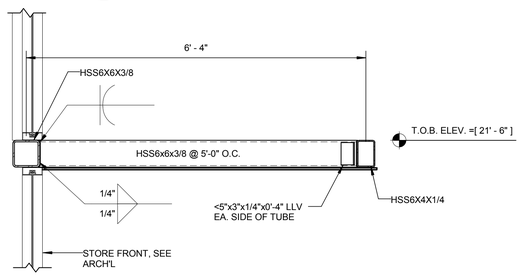

8 S501 DETAIL
SC: 3/4" = 1'-0"

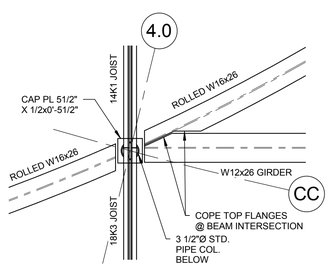

C S501 PLAN VIEW
SC: 3/4" = 1'-0"

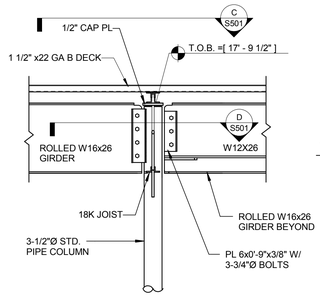

9 S501 DETAIL
SC: 3/4" = 1'-0"

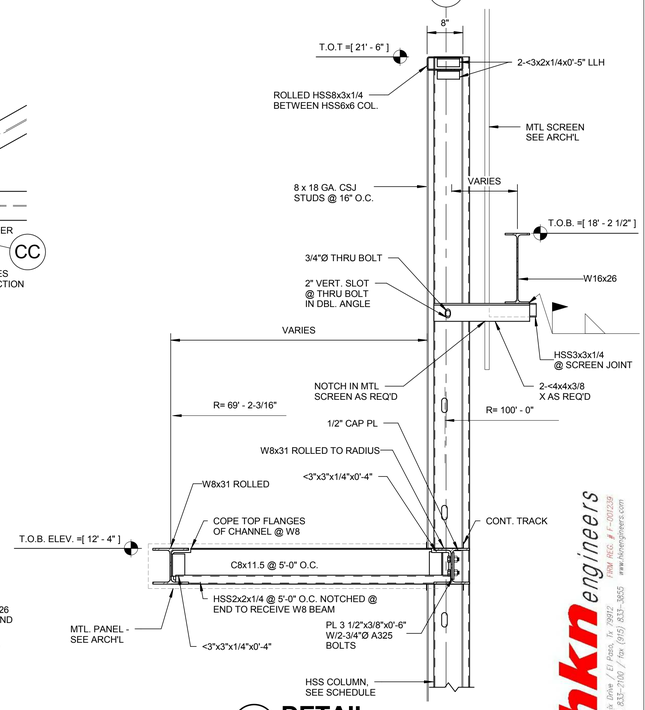

10 S501 DETAIL
SC: 3/4" = 1'-0"

100% CONSTRUCTION DOCUMENTS

REFERENCES – BENCHMARKS

BY	REVISIONS	DATE

ENGINEER SEAL

STATE OF TEXAS
JAVIER M. CARLIN
89231
LICENSED PROFESSIONAL ENGINEER
03/03/16

SCALE
HOR. SHOWN
VER. SHOWN

DATE	3/03/16
DESIGN BY	V.L/ E.K. / J.C.
DRAWN BY	J.C.
CHKD. BY	J.C.
APPD. BY	

PROJECT NAME

NORTHGATE TRANSFER CENTER

EL PASO, TEXAS

CITY OF EL PASO
CAPITAL IMPROVEMENT DEPARTMENT

THE CITY OF EL PASO TEXAS

SHEET TITLE

ROOF FRAMING DETAILS

SHEET
S501

hkn engineers
5005 Gateway East, Suite 210 / El Paso, TX 79905
ph: (915) 532-2080 / fax: (915) 532-3805
TBPE REG. # F-000139
www.hknengineers.com

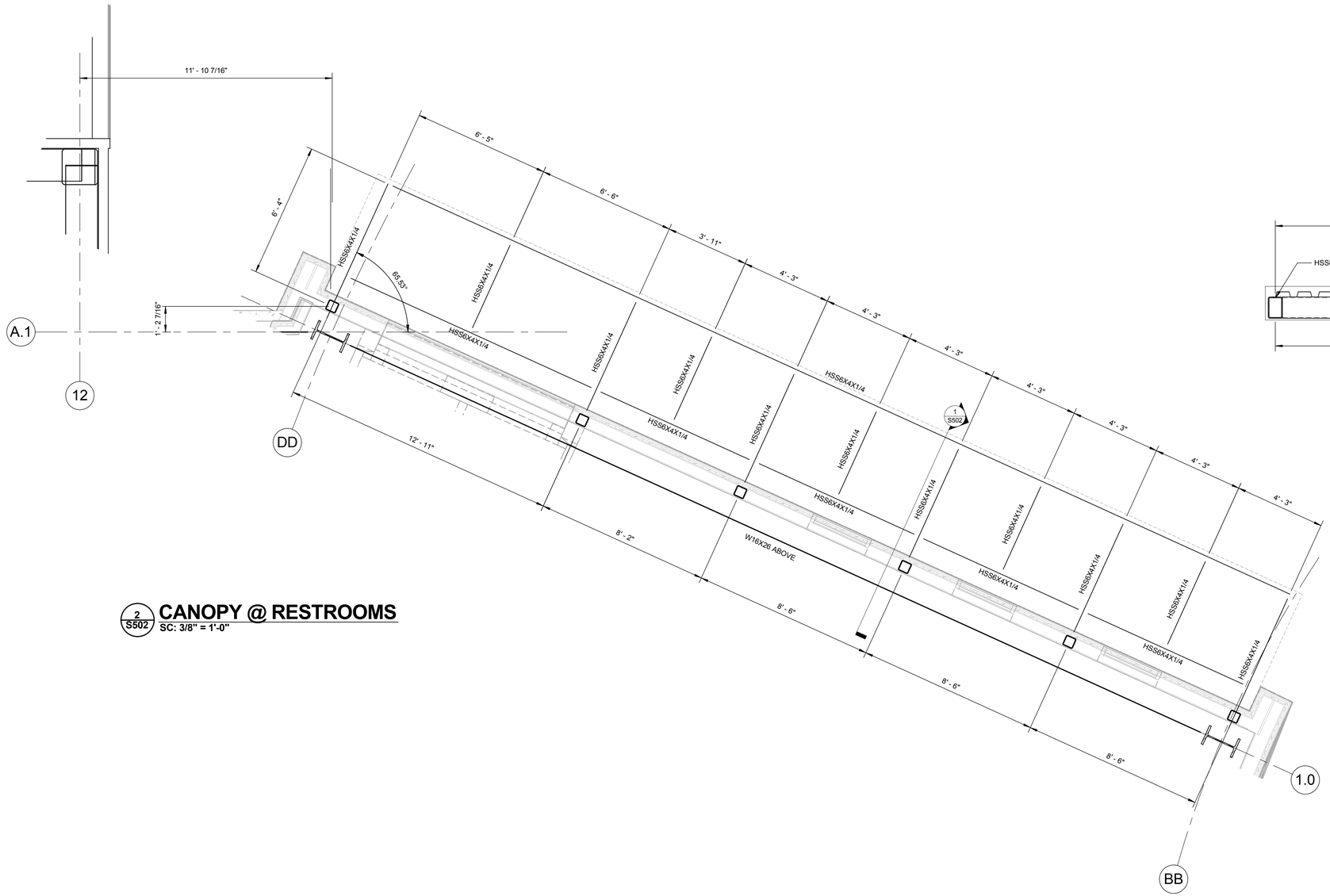

2 S502 CANOPY @ RESTROOMS
SC: 3/8" = 1'-0"

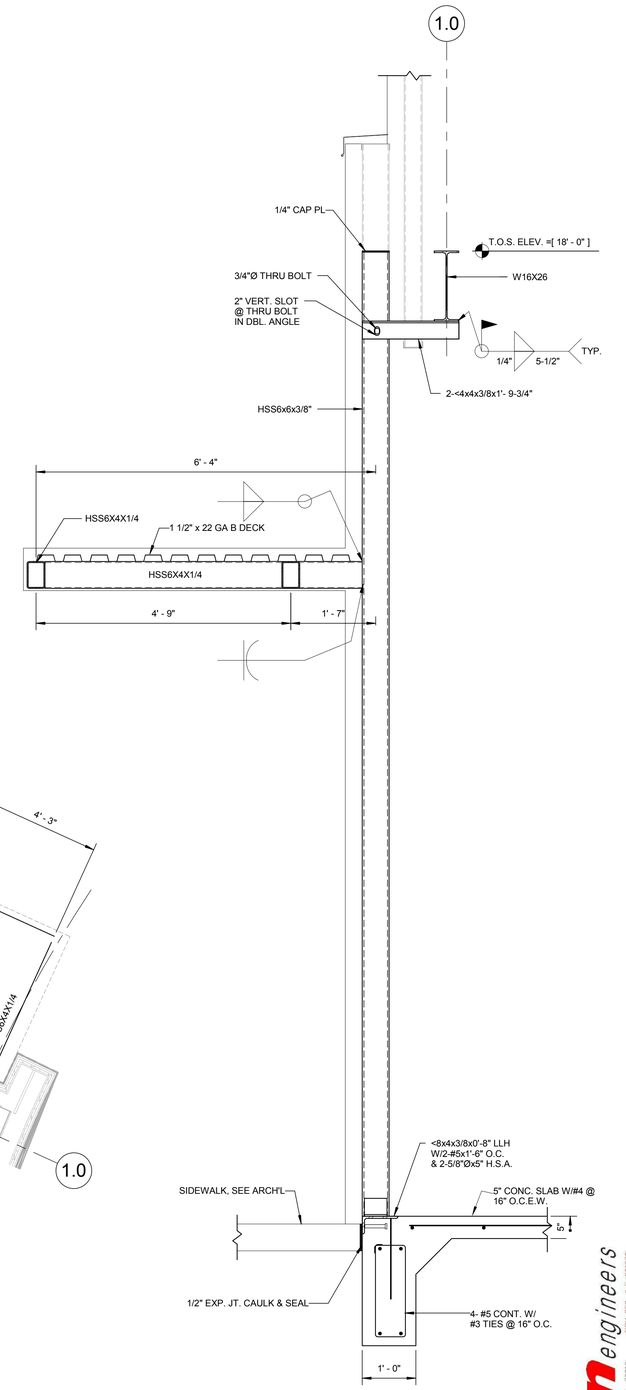

1 S502 DETAIL
SC: 3/4" = 1'-0"

100% CONSTRUCTION DOCUMENTS

hkn engineers
3800 North Lamar / El Paso, TX 79902
ph. (915) 833-1700 / fax (915) 833-1855
TBPE REG. # F-00520
www.hknengineers.com

REFERENCES – BENCHMARKS

BY	REVISIONS	DATE

ENGINEER SEAL
STATE OF TEXAS
JAVIER M. CARLIN
89231
LICENSED PROFESSIONAL ENGINEER
03/03/16

SCALE
HOR. SHOWN
VER. SHOWN

DATE 03/03/16
DESIGN BY V.I. E.K. J.C.
DRAWN BY C.G. J.C.
CHKD. BY J.C.
APPD. BY J.C.

PROJECT NAME
NORTHGATE TRANSFER CENTER
EL PASO, TEXAS

CITY OF EL PASO
CAPITAL IMPROVEMENT DEPARTMENT

SHEET TITLE
ROOF FRAMING DETAILS

SHEET
S502

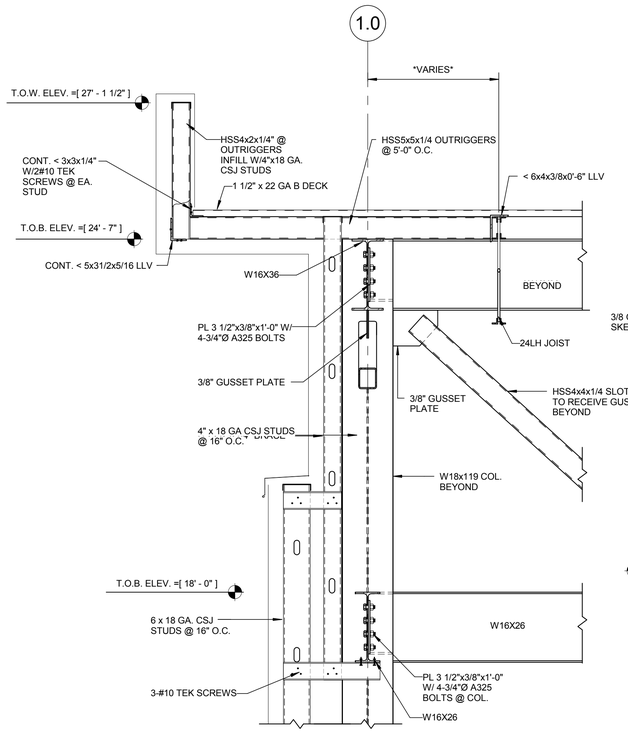

1 S503 **DETAIL** SC: 3/4" = 1'-0"

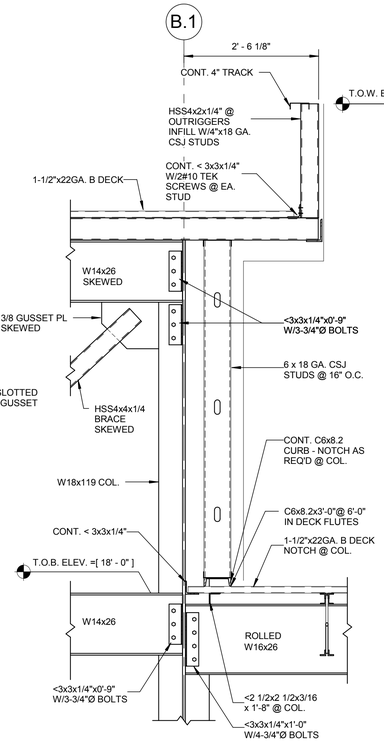

2 S503 **DETAIL** SC: 3/4" = 1'-0"

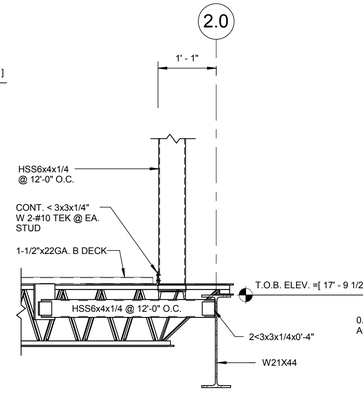

3 S503 **DETAIL** SC: 3/4" = 1'-0"

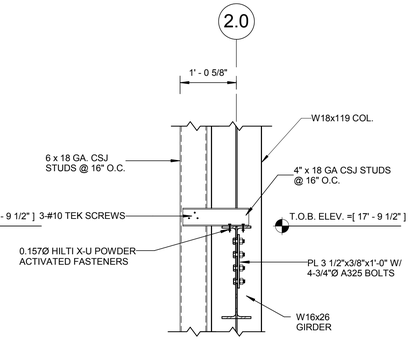

4 S503 **DETAIL** SC: 3/4" = 1'-0"

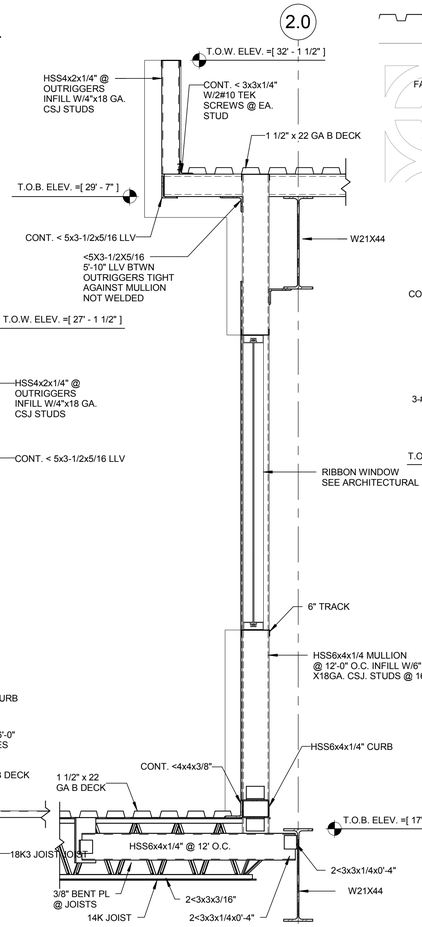

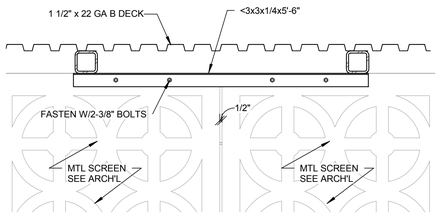

5 S503 **DETAIL** SC: 3/4" = 1'-0"

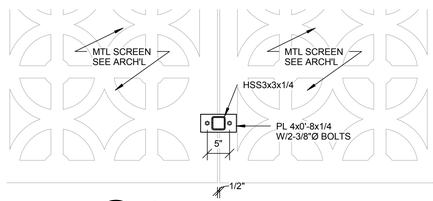

6 S503 **DETAIL** SC: 3/4" = 1'-0"

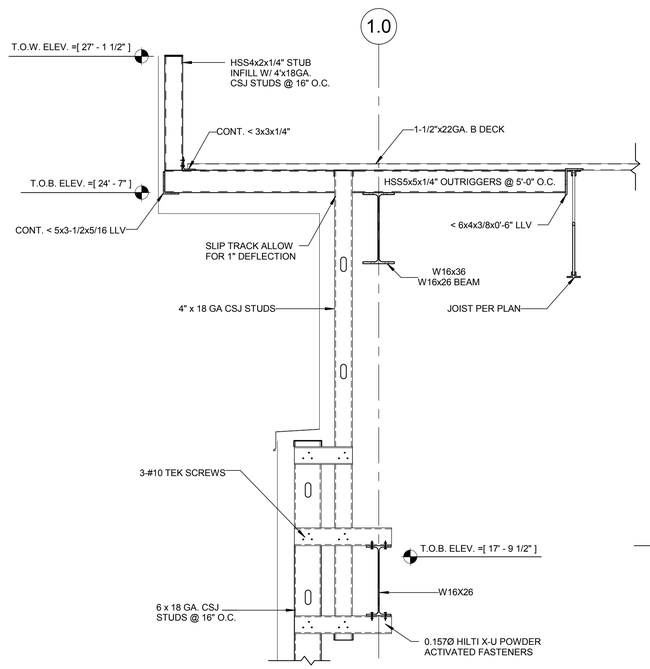

8 S503 **DETAIL** SC: 3/4" = 1'-0"

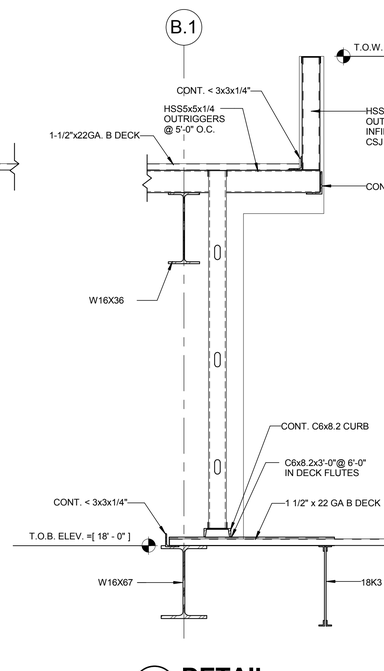

9 S503 **DETAIL** SC: 3/4" = 1'-0"

10 S503 **DETAIL** SC: 3/4" = 1'-0"

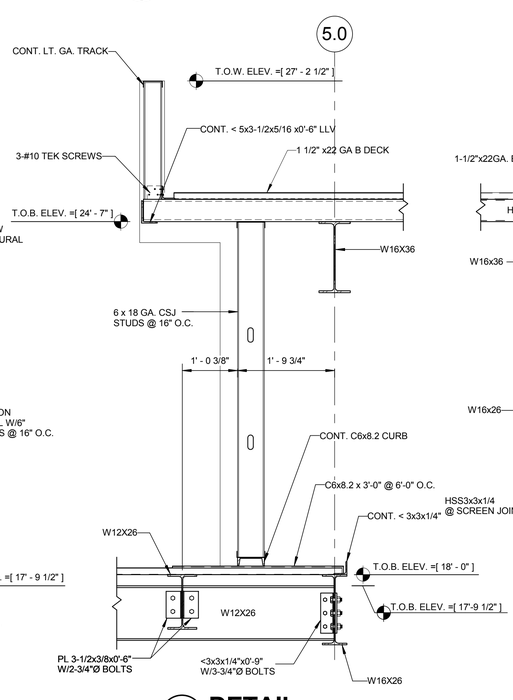

11 S503 **DETAIL** SC: 3/4" = 1'-0"

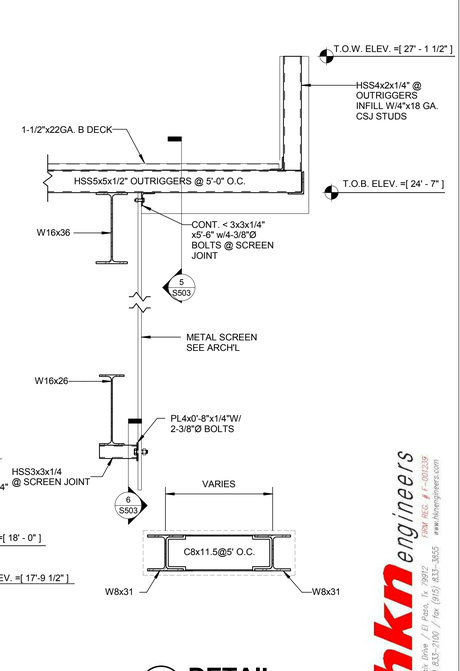

12 S503 **DETAIL** SC: 3/4" = 1'-0"

100% CONSTRUCTION DOCUMENTS

hkn engineers
3609 Dyer Drive / El Paso, Tx. 79904
ph: (915) 532-2700 / fax: (915) 532-3855
Texas REG. # F-002208
www.hknengineers.com

REFERENCES – BENCHMARKS

BY	REVISIONS	DATE

ENGINEER SEAL

STATE OF TEXAS
JAVIER M. CARLIN
89231
LICENSED PROFESSIONAL ENGINEER
03/03/16

SCALE	
HOR.	SHOWN
VER.	SHOWN
DATE	03/03/16
DESIGN BY	V.I. E.K. J.C.
DRAWN BY	C.G.
CHKD. BY	J.C.
APPD. BY	J.C.

PROJECT NAME

NORTHGATE TRANSFER CENTER

EL PASO, TEXAS

CITY OF EL PASO
CAPITAL IMPROVEMENT DEPARTMENT

THE CITY OF EL PASO TEXAS

SHEET TITLE

ROOF FRAMING DETAILS

SHEET

S503

AIR CONDITIONING UNIT SCHEDULE

MARK	MFGR.	MODEL	CFM	ESP	COOLING MBH TOTAL	COOLING MBH SENS.	COIL ENT. AIR db°F	COIL ENT. AIR wb°F	AMB db°F	EER	REFRI	HEATING MBH INTPUT	HEATING MBH OUTPUT	HEATING MBH FUEL	MCA	MOP	VOLTS	PH	HP	WT	REMARKS
ACU-1	TRANE	YHC067	2100	.5"	60	60	82	60	101	17	R410A	100	80	NG	30	45	208	3	3/4	1000	CONTROLLED VIA EMCS, ECONOMIZER, MIN. 600 CFM O.A., HAIL GUARD, MERV13 FILTERS, DUCT SMOKE DETECTOR W/ REMOTE TEST STATION, AND BAROMETRIC RELIEF.
ACU-2	TRANE	YHC067	2400	.5"	60	60	82	60	101	17	R410A	100	80	NG	30	45	208	3	3/4	1000	CONTROLLED VIA EMCS, ECONOMIZER, MIN. 600 CFM O.A., HAIL GUARD, MERV13 FILTERS, DUCT SMOKE DETECTOR W/ REMOTE TEST STATION, AND BAROMETRIC RELIEF.
ACU-3	TRANE	YHC067	2400	.5"	60	60	82	60	101	17	R410A	100	80	NG	30	45	208	3	3/4	1000	CONTROLLED VIA EMCS, ECONOMIZER, MIN. 600 CFM O.A., HAIL GUARD, MERV13 FILTERS, DUCT SMOKE DETECTOR W/ REMOTE TEST STATION, AND BAROMETRIC RELIEF.
ACU-4	TRANE	YHC102	3,200	.5"	70	70	80	62	101	13	R410A	110	88	NG	43.3	50	208	3	1	1600*	CONTROLLED VIA EMCS, ECONOMIZER, MIN. 600 CFM O.A., HAIL GUARD, MERV13 FILTERS, DUCT SMOKE DETECTOR W/ REMOTE TEST STATION, AND BAROMETRIC RELIEF.

1. PROVIDE VIBRATION/SOUND ISOLATION CURBS ON ALL ROOFTOP UNITS.

DIFFUSER SCHEDULE

MARK	MFGR.	MODEL	REMARKS
A	NAILOR	6200	4-WAY SUPPLY, SURFACE MOUNT OR LAY IN, ALL ALUMINUM CONSTRUCTION, W/OBD, COLOR WHITE.
B	NAILOR	5010	LINEAR DIFFUSER 1in. SLOTS, W/ PLENUM. SIZE AS SHOWN ON DWGS. COLOR COORDINATE WITH ARCH. DRAWINGS.
C	NAILOR	45DL2	DUCT MOUNTED ROTOLOUVER DIFFUSER, ALUM CONST., W/ VOLUME DAMPER, COLOR COORDINATE WITH ARCH. DRAWINGS.
D	NAILOR	51ECA	CUBE CORE RETURN AIR GRILLE, ALL ALUMINUM CONTRUCTION, SURFACE.
E	NAILOR	51ECA	CUBE CORE RETURN AIR GRILLE, ALL ALUMINUM CONTRUCTION, T-BAR LAY-IN

DOOR AIR CURTAIN SCHEDULE

MARK	MFGR.	MODEL	CFM	LENGTH	MOTOR HP	MOTOR V	MOTOR PH	WT	REMARKS
DAC-1	MARS	PH10	1050	42"	1/2	115	1	19	RECESSED UNIT., CONTROLLED VIA EMCS

AIR HANDLER (INDOOR) UNIT SCHEDULE

MARK	MFGR.	MODEL	CFM	COOLING MBH TOTAL	COOLING MBH db°F	COOLING MBH wb°F	WT	ELECTRICAL KW	ELECTRICAL RFS	ELECTRICAL VOLTS	ELECTRICAL PH	REMARKS
AHIU-1	FUJITSU	ASU24CI	600	23.0	80	67	40*	2.0	20	208	1	W/ T-STAT MOUNTED ON WALL, CONDENSATE PUMP.
AHIU-2	FUJITSU	ASU24CI	600	23.0	80	67	40*	2.0	20	208	1	W/ T-STAT MOUNTED ON WALL, CONDENSATE PUMP.
AHIU-3	FUJITSU	ASU24CI	600	23.0	80	67	40*	2.0	20	208	1	W/ T-STAT MOUNTED ON WALL, CONDENSATE PUMP.

CONDENSING UNIT (OUTDOOR) SCHEDULE

MARK	MFGR.	MODEL	COOLING MBH	AMB db° F	SEER	ELECTRICAL KW	ELECTRICAL RFS	ELECTRICAL VOLTS	ELECTRICAL PH	WT	REMARKS
CU-1	FUJITSU	AOU24CI	22.5	100	11	2.0	20	208	1	147*	LOW AMBIENT KIT.
CU-2	FUJITSU	AOU24CI	22.5	100	11	2.0	20	208	1	147*	LOW AMBIENT KIT.
CU-3	FUJITSU	AOU24CI	22.5	100	11	2.0	20	208	1	147*	LOW AMBIENT KIT.

EXHAUST FAN SCHEDULE

MARK	MFGR.	MODEL	CFM	ESP	MOTOR HP	MOTOR V	MOTOR PH	MOTOR NO.SPDS.	WT	REMARKS
EF-1	COOK	180ACEB	3225	0.5"	3/4	120	1	1	115	W/ ROOFCURB AND BACKDRAFT DAMPER.
EF-2	CAPTIVE AIRE	NCA14FA	2000	1.0	1/2	120	1	1	200	UPBLAST EXHAUST W/ ROOF CURB AND BACKDRAFT DAMPER

MAKE UP AIR UNIT SCHEDULE

MARK	MFGR.	MODEL	CFM	ESP	HEATING (MBH) INPUT	HEATING (MBH) OUTPUT	HEATING (MBH) FUEL	MOTOR DATA HP	MOTOR DATA VOLTS	MOTOR DATA PH	NO. SPDS.	WT	REMARKS
MUA-1	CAPTIVE AIRE	A1-1.200-G10	1600	.8"	200	160	NG	3/4	120	1	1	1000*	W/ BLOWER, EVAP. COOL SECTION, HEATER, 100% O.A., ELECTRONIC MODULATING GAS VALVE, CONTROL PANEL, INTERLOCK WITH EF-2.

KITCHEN HOOD SCHEDULE

MARK	MFGR.	MODEL	SIZE L	SIZE W	WT	DESCRIPTION
KH-1	CAPTIVEAIRE	ND	8'-0"	4'-0"	1000*	WITH PERFORATED SUPPLY PLENUM, AND ANSUL FIRE SUPPRESSION SYSTEM, CONTROL SYSTEM.

LEGEND

	NEW	EXISTING
REFRIGERANT SUCTION	RS	
REFRIGERANT LIQUID	RL	
DUCTWORK (INSULATED)		
DUCTWORK (UNINSULATED)		
MECHANICAL EQUIPMENT BELOW ROOF		
FLEXIBLE DUCT		
AIR CONDITIONING UNIT	ACU	
AIR HANDLER UNIT	AHU	
CONDENSING UNIT	CU	
EXHAUST FAN	EF	
VARIABLE AIR VOLUME UNIT	VAV	
DAMPER	D	
VOLUME DAMPER	VD	
THERMOSTAT	T	
CONTROL SWITCH	C	
CO2 SENSOR	S CO2	
NEW WORK INTERFACE		
DIFFUSER	MARK, SIZE, CFM	
KEYED SYMBOL	PARTIAL NO., SHEET NO.	

GENERAL NOTES

1. MECHANICAL CONTRACTORS ARE REQUIRED TO VISIT THE SITE PRIOR TO SUBMITTING A BID.
2. DUCT DIMENSIONS SHOWN ARE AIR PASSAGE DIMENSIONS. ALL INSULATED DUCT IS TO BE LINED OR WRAPPED AS SPECIFIED.
3. ALL THERMOSTATS AND CONTROL SWITCHES SHALL BE LOCATED 4'-0" ABOVE FINISHED FLOOR UNLESS OTHERWISE NOTED. PROVIDE A LOCKING PLASTIC THERMOSTAT COVER FOR T-STATS ONLY.
4. SHEET METAL SADDLES SHALL BE PLACED UNDER PIPE INSULATION AT ALL HANGER LOCATIONS, WHERE HANGERS CONTACT BARE COPPER PIPING PROVIDE DIELECTRIC INSULATION.
5. ALL EXPOSED SUPPORTS AND HANGERS FOR EQUIPMENT OR PIPING SHALL BE PAINTED TO MATCH SURROUNDING ROOM OR STRUCTURE.
6. ANY PLASTIC PIPING LOCATED IN A RETURN CEILING SPACE OR PLENUM SHALL BE ENCLOSED IN SHEETROCK OR WRAPED WITH 3M FIREMASTER BLANKET OR UL910 STANDARD COVER.
7. CONDENSATE LINES IN WALLS, CEILINGS OR INTERIOR SPACE SHALL BE INSULATED.
8. PROVIDE UL RATED FIRE STOPPING AT PIPE AND DUCT PENETRATIONS OF FIRE RATED STRUCTURES. PROVIDE FIRE DAMPERS ON ALL DUCTS TRAVERSING FIRE RATED WALLS, SEE ARCH. DWGS.
9. CONTRACTOR SHALL COORDINATE AND PROVIDE SUPPORT TO COMMISSION AGENT FOR THE VERIFICATION OF ALL SYSTEMS OPERATION.

The seal appearing on this document was authorized by JOSE A. BERNAL P.E. 90861, on 2/04/2016

JOSE A. BERNAL 90861 LICENSED PROFESSIONAL ENGINEER

FLUID SYSTEMS, INC.
CONSULTING MECHANICAL ENGINEERS
REGISTRATION NUMBER: F-1161
12244 RATHMORE DR. • EL PASO, TEXAS 79928
OFFICE: (915) 856-9420 FAX: (915) 856-9011

100% CONSTRUCTION DOCUMENTS

REFERENCES – BENCHMARKS

DATE	REVISIONS	BY

ARCHITECTS SEAL

FINAL DESIGN SUBMITTAL NOT FOR CONSTRUCTION

SCALE HOR: SIGNMN VER: SIGNMN

DATE 02/04/16
DESIGN BY JSL
DRAWN BY JSL
CHKD BY J.A.B.
APPD. BY J.A.B.

PROJECT NAME

NORTHGATE TRANSFER CENTER

EL PASO, TEXAS.

CITY OF EL PASO

CAPITAL IMPROVEMENT DEPARTMENT

SHEET TITLE

LEGEND, SCHEDULES AND NOTES

SHEET M100

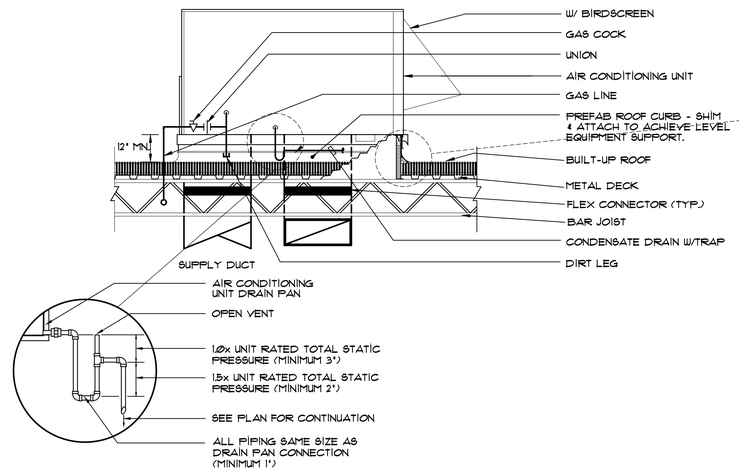

1 M101 AIR CONDITIONING UNIT DETAIL

SCALE: NTS

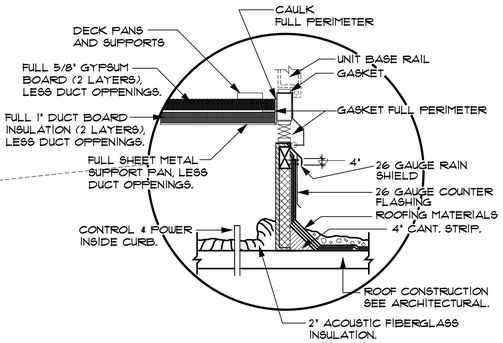

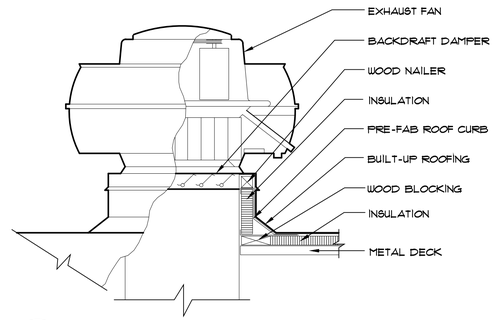

2 M101 EXHAUST FAN DETAIL

SCALE: NTS

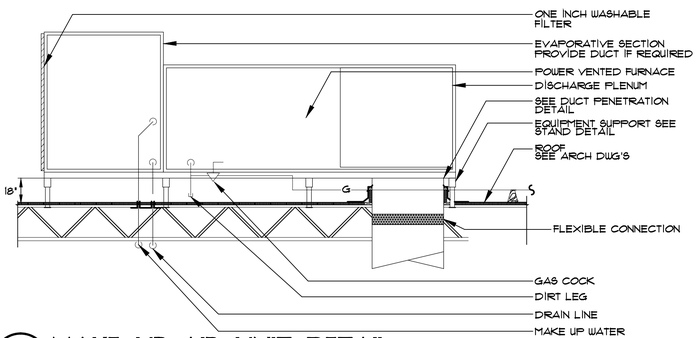

3 M101 MAKE-UP AIR UNIT DETAIL

N.T.S.

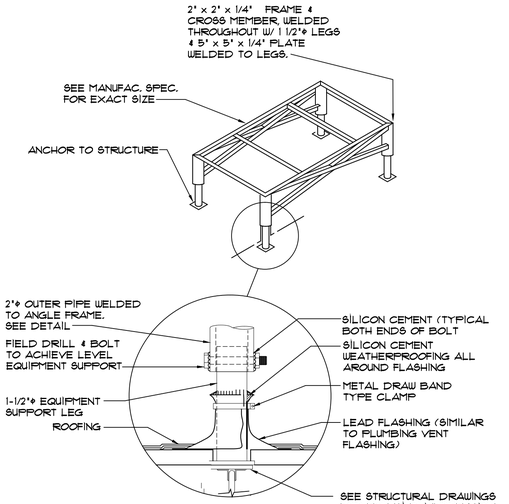

4 M101 MAKEUP AIR UNIT/STAND DETAIL

SCALE: N.T.S.

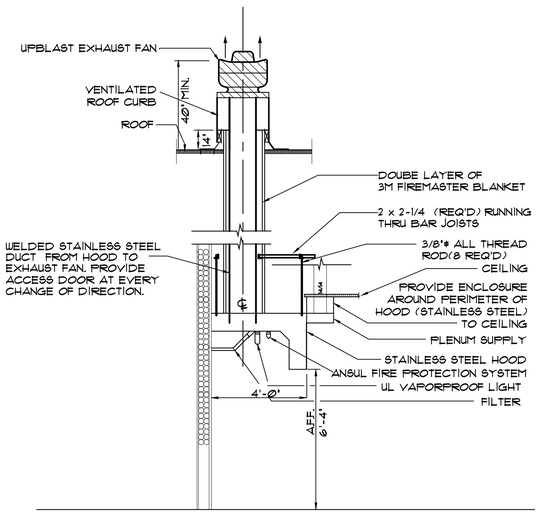

5 M101 KITCHEN HOOD SYSTEM DETAIL

SCALE: NTS

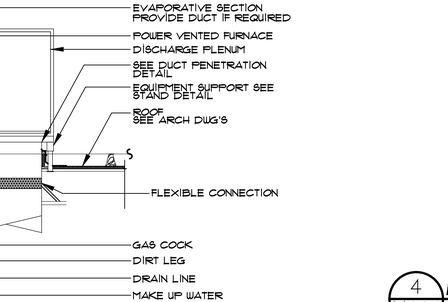

6 M101 DUCT FLASHING DETAIL

SCALE: NTS

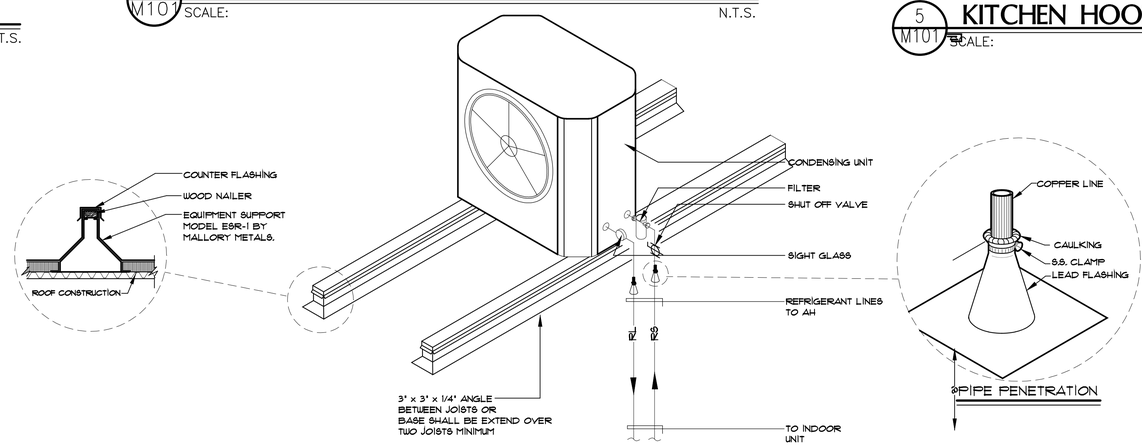

7 M101 ROOF MOUNTED CONDENSING UNIT DETAIL

SCALE: N.T.S.

The seal appearing on this document was authorized by JOSE A. BERNAL, P.E. 90861 on 2/04/2016

JOSE A. BERNAL 90861 LICENSED PROFESSIONAL ENGINEER

FLUID SYSTEMS, INC.
CONSULTING MECHANICAL ENGINEERS
REGISTRATION NUMBER: F-1161
12244 RAITHMORE DR. • EL PASO, TEXAS 79928
OFFICE: (915) 856-9420 FAX: (915) 856-9011

100% CONSTRUCTION DOCUMENTS

02/04/2016 5:12PM \\CARL\Shared Documents FSI\FSI-Projects\FSI1500\1531 NE transit terminal\1531-M101.DWG

REFERENCES – BENCHMARKS

DATE	REVISIONS	BY

ARCHITECTS SEAL

FINAL DESIGN SUBMITTAL NOT FOR CONSTRUCTION

SCALE HOR: SIGVARN VER: SIGVARN

DATE 02/04/16
DESIGN BY JSL
DRAWN BY JSL
CHKD BY J.A.B.
APPD. BY J.A.B.

PROJECT NAME

NORTHGATE TRANSFER CENTER

EL PASO, TEXAS.

CITY OF EL PASO

CAPITAL IMPROVEMENT DEPARTMENT

SHEET TITLE

MECHANICAL DETAILS

SHEET M101

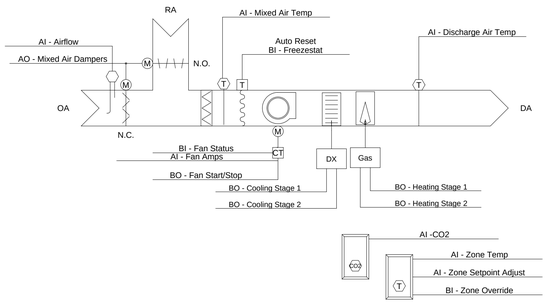

ROOFTOP AIR CONDITIONING UNITS

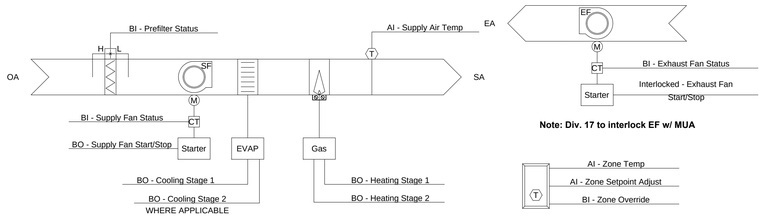

MAKE UP AIR UNIT – KITCHEN

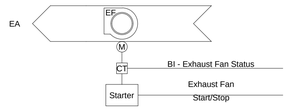

EXHAUST FANS

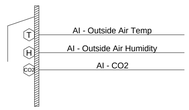

OUTSIDE AIR CONDITIONS

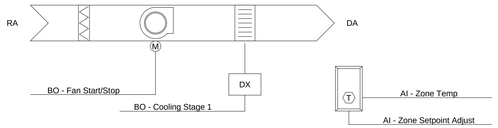

DUCTLESS SPLIT SYSTEMS

1 M102 CONTROL DIAGRAMS

SCALE: N.T.S.

The seal appearing on this document was authorized by JOSE A. BERNAL P.E. 90861 on 2/04 2016

JOSE A. BERNAL 90861 LICENSED PROFESSIONAL ENGINEER

FLUID SYSTEMS, INC.
CONSULTING MECHANICAL ENGINEERS
REGISTRATION NUMBER: F-1161
12244 RATHMORE DR. ◆ EL PASO, TEXAS 79928
OFFICE: (915) 856-9420 FAX: (915) 856-9011

100% CONSTRUCTION DOCUMENTS

02/04/2016 5:11PM \\CARL\Shared Documents FSI\FSI-Projects\FSI1500\1531 NE transit terminal\1531-M102.DWG

REFERENCES – BENCHMARKS

BY	REVISIONS	DATE

ARCHITECTS SEAL

FINAL DESIGN SUBMITTAL NOT FOR CONSTRUCTION

SCALE
HOR: SIGVAN
VER: SIGVAN

DATE	02/04/16
DESIGN BY	FSI
DRAWN BY	FSI
CHKD. BY	J.A.B.
APPD. BY	J.A.B.

PROJECT NAME

NORTHGATE TRANSFER CENTER

EL PASO, TEXAS.

CITY OF EL PASO

CAPITAL IMPROVEMENT DEPARTMENT

SHEET TITLE

CONTROL SCHEMATICS

SHEET

M102

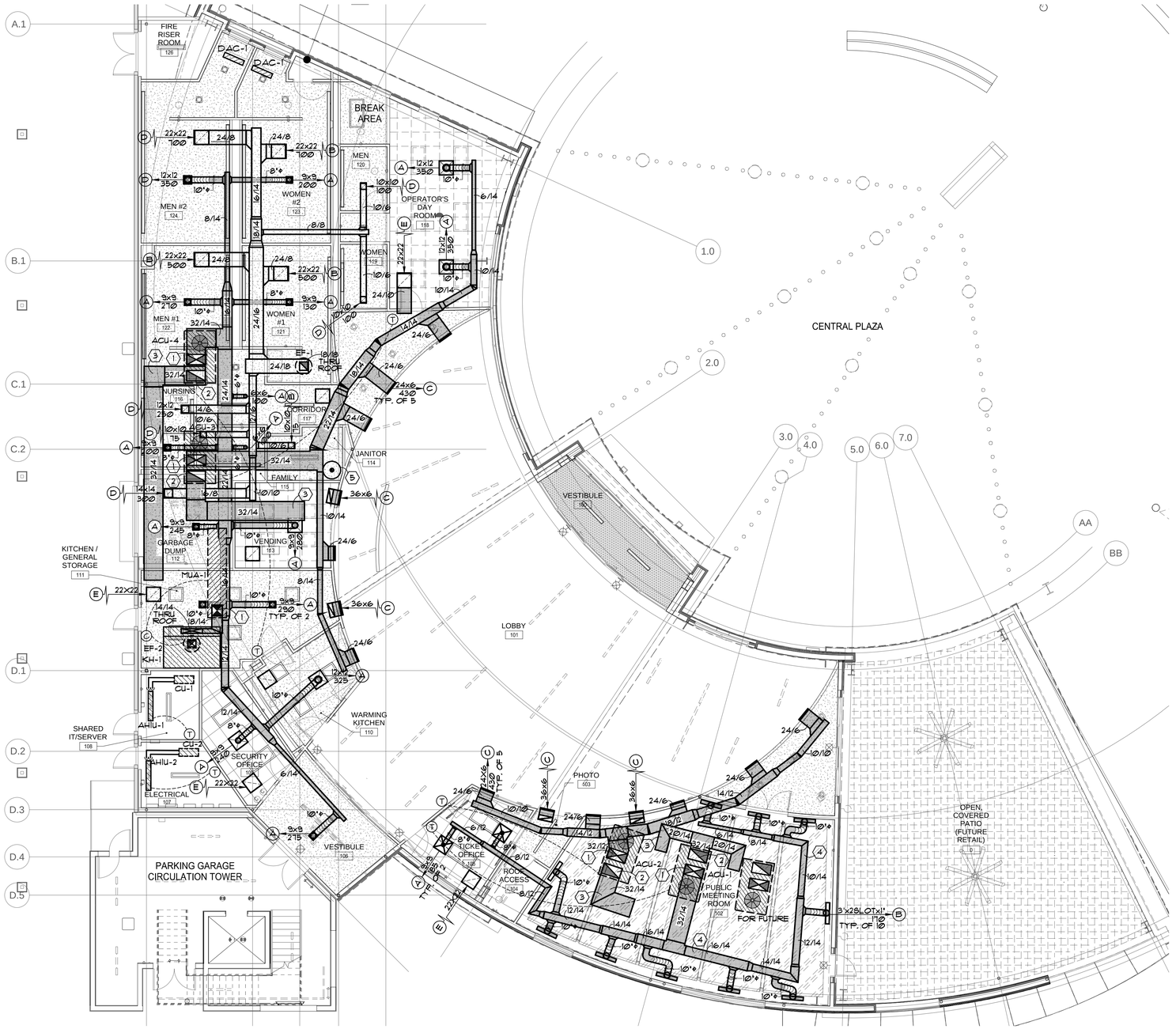

KEYED NOTES

1. PROVIDE A FULL SIZED SUPPLY AIR PENETRATION THRU ROOF FROM NEW UNIT.
2. PROVIDE A FULL SIZE RETURN AIR PENETRATION THRU ROOF FROM NEW UNIT.
3. NEW RETURN DUCT TO BE LINED WITH 1-1/2 INCH LINACOUSTIC DUCT INSULATION.
4. DUCT ABOVE TO BE PAINTED BLACK OR COLOR SELECTED BY ARCH.
5. EXTEND CONCENTRIC VENT FROM WATER HEATER THRU ROOF.

NEW MECHANICAL PLAN – TRANSIT TERMINAL

SCALE: 1/8" = 1'–0"

The seal appearing on this document was authorized by JOSE A. BERNAL, P.E. 90861 on 2/04/2016

JOSE A. BERNAL 90861 LICENSED PROFESSIONAL ENGINEER TEXAS

FLUID SYSTEMS, INC.
CONSULTING MECHANICAL ENGINEERS
REGISTRATION NUMBER: F-1161
12244 RATHMORE DR. • EL PASO, TEXAS 79928
OFFICE: (915) 856-9420 FAX: (915) 856-9011

100% CONSTRUCTION DOCUMENTS

02/04/2016 5:10PM \\CARL\Shared Documents FSI\FSI-Projects\FSI1500\1531 NE transit terminal\1531-M200.DWG

REFERENCES – BENCHMARKS

DATE	REVISIONS	BY

ARCHITECTS SEAL

FINAL DESIGN SUBMITTAL NOT FOR CONSTRUCTION

SCALE
HOR: SIGVAN
VER: SIGVAN

DATE 02/04/16
DESIGN BY FS
DRAWN BY FS
CHKD. BY J.A.B.
APPD. BY J.A.B.

PROJECT NAME

NORTHGATE TRANSFER CENTER

EL PASO, TEXAS.

CITY OF EL PASO

CAPITAL IMPROVEMENT DEPARTMENT

SHEET TITLE

MECHANICAL PLAN TRANSIT TERMINAL

SHEET M200

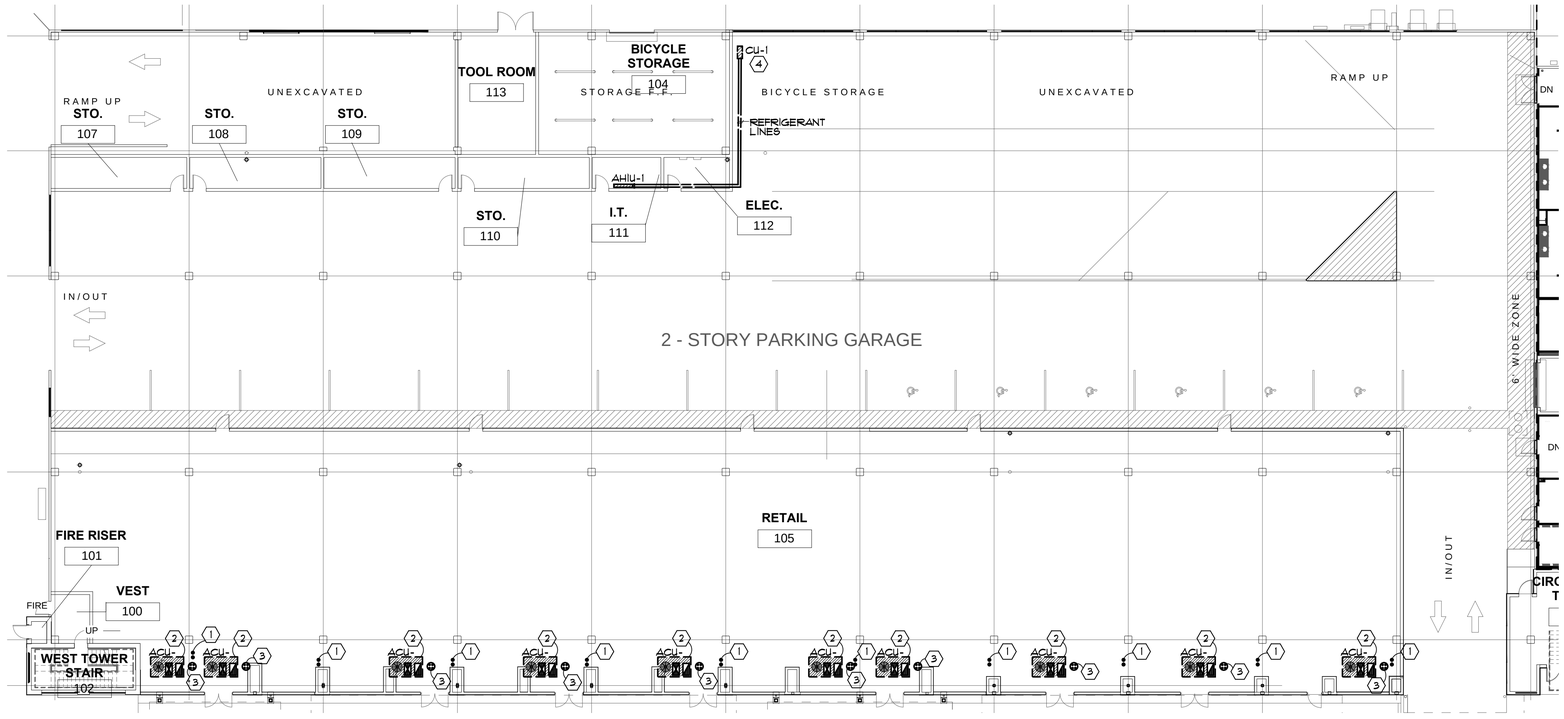

NEW MECHANICAL PLAN – PARKING GARAGE 1ST LEVEL

SCALE: 1/16" = 1'-0"

KEYED NOTES

1. 4" EXHAUST DUCT UP THRU ROOF AND WEATHER CAP WITH INSECT SCREEN. STUB DOWN IN CEILING SPACE. SECURE TO STRUCTURE. KEEP ALL FLUES AND EXHAUST CAPS A MINIMUM OF 10' AWAY OR 2' ABOVE ALL FRESH AIR INTAKES ON A/C UNITS. PROVIDE 4" DIAMETER CAPPED PLUMBING VENT FOR FUTURE EXTENSION.
2. PROVIDE TRANE NON ADJUSTABLE ROOF CURB WITH SHEET METAL CAP AS DETAILED. ROOF CURB USE WITH TRANE 4-8 TON PACKAGED ROOFTOP AIR CONDITIONING UNITS, NO SUBSTITUTIONS.
3. THIS CONTRACTOR SHALL PROVIDE A PORTALS PLUS 4-PORT. SEE DETAIL FOR INSTALATION OF PORTAL PLUS.
4. MOUNT CONDENSING UNIT 18 INCHES FROM CEILING. MOUNT ON FRAME ANCHORED TO WALL.

The seal appearing on this document was authorized by JOSE A. BERNAL P.E. 90861, on 3/04 2016

JOSE A. BERNAL 90861 LICENSED PROFESSIONAL ENGINEER TEXAS

FLUID SYSTEMS, INC.
CONSULTING MECHANICAL ENGINEERS
REGISTRATION NUMBER: F-1161
12244 RATHMORE DR. • EL PASO, TEXAS 79928
OFFICE: (915) 856-9420 FAX: (915) 856-9011

100% CONSTRUCTION DOCUMENTS

03/03/2016 4:57PM \\CARL\Shared Documents FSI\FSI-Projects\FSI1500\1531 NE transit terminal\1531-MG200.DWG

REFERENCES – BENCHMARKS

REVISIONS	DATE	BY

ARCHITECTS SEAL

SCALE HOR: SIGVAN VER: SIGVAN

DATE 03/04/16
DESIGN BY FS
DRAWN BY FS
CHKD. BY J.A.B.
APPD. BY J.A.B.

PROJECT NAME

NORTHGATE TRANSFER CENTER

EL PASO, TEXAS.

CITY OF EL PASO
CAPITAL IMPROVEMENT DEPARTMENT

SHEET TITLE

MECHANICAL PLAN PG FIRST LEVEL

SHEET MG200

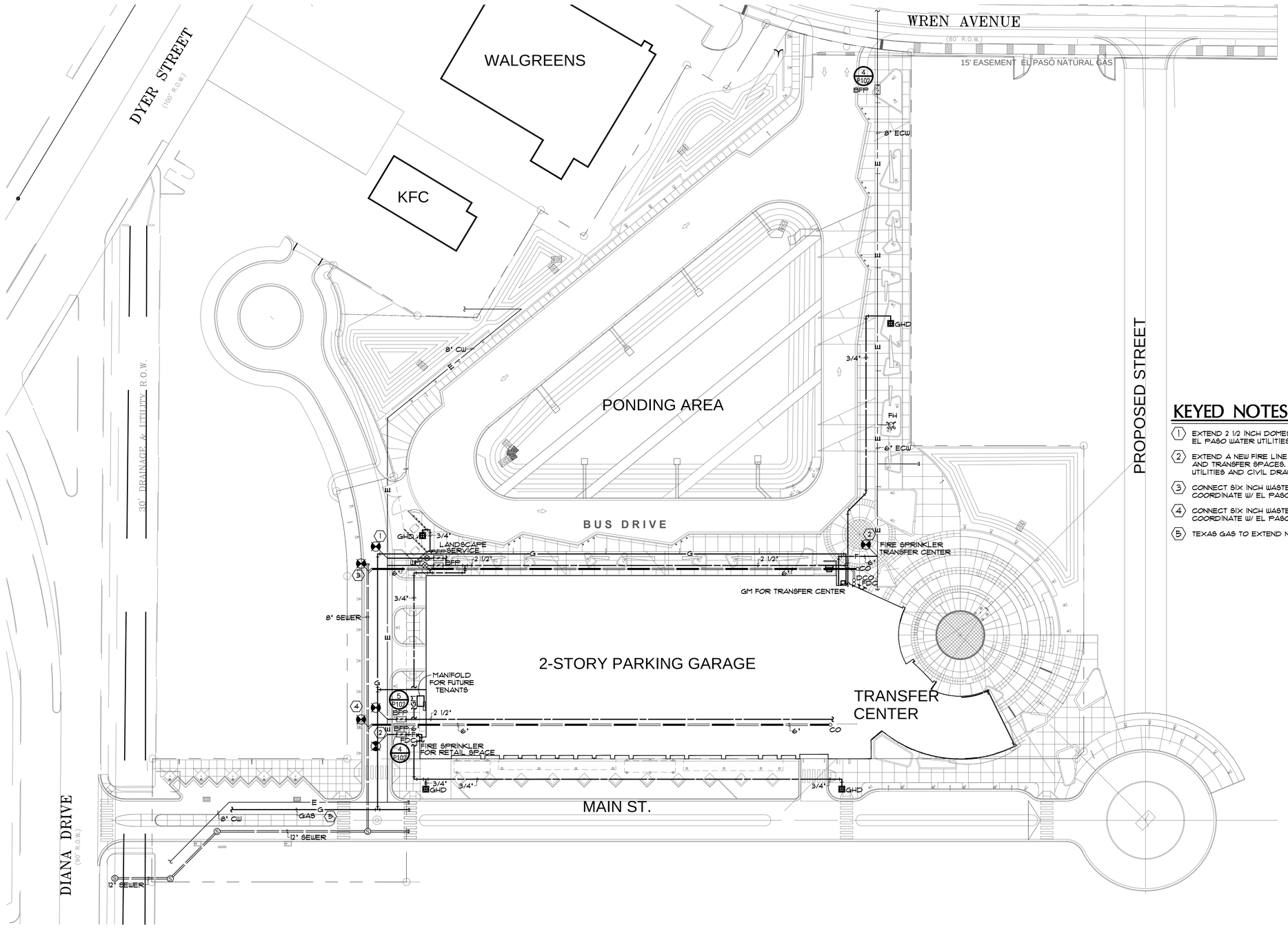

KEYED NOTES

1. EXTEND 2 1/2 INCH DOMESTIC WATER SUPPLY. COORDINATE WITH EL PASO WATER UTILITIES AND CIVIL DRAWINGS.
2. EXTEND A NEW FIRE LINE TO PROVIDE FIRE SPRINKLER TO RETAIL AND TRANSFER SPACES. COORDINATE W/ EL PASO WATER UTILITIES AND CIVIL DRAWINGS.
3. CONNECT SIX INCH WASTE LINE TO SEWER MAIN. COORDINATE W/ EL PASO WATER UTILITIES AND CIVIL DRAWINGS.
4. CONNECT SIX INCH WASTE LINE TO SEWER MAIN. COORDINATE W/ EL PASO WATER UTILITIES AND CIVIL DRAWINGS.
5. TEXAS GAS TO EXTEND NEW GAS SERVICE TO NEW BUILDING.

SITE PLAN

SCALE: 1" = 40'-0"

The seal appearing on this document was authorized by JOSE A. BERNAL, P.E. 90861 on 3/04 2016

JOSE A. BERNAL 90861 LICENSED PROFESSIONAL ENGINEER STATE OF TEXAS THE CITY OF EL PASO

FLUID SYSTEMS, INC.
CONSULTING MECHANICAL ENGINEERS
REGISTRATION NUMBER: F-1161
12244 RATHMORE DR. • EL PASO, TEXAS 79928
OFFICE: (915) 856-9420 FAX: (915) 856-9011

100% CONSTRUCTION DOCUMENTS

03/03/2016 4:12PM \\CARL\Shared Documents FSI\FSI-Projects\FSI1500\1531 NE transit terminal\1531-P100.DWG

REFERENCES -- BENCHMARKS

DATE	REVISIONS	BY

ARCHITECTS SEAL

SCALE HOR: SIGVAN VER: SIGVAN

DATE 03/04/16
DESIGN BY FSI
DRAWN BY FSI
CHKD. BY J.A.B.
APPD. BY J.A.B.

PROJECT NAME

NORTHGATE TRANSFER CENTER

EL PASO, TEXAS.

CITY OF EL PASO
CAPITAL IMPROVEMENT DEPARTMENT

SHEET TITLE

SITE PLAN

SHEET P100

WATER HEATER SCHEDULE

MARK	MFGR.	MODEL	INPUT WATTS	RECOVERY GPH@ 90° ΔT	CAPACITY GAL.	REMARKS
WH-1	A.O. SMITH	BTH-120(A)	120	154	60	W/CONCENTRIC VENT KIT & POWER VENTING, WITH EXPANSION TANK.

SUMP PUMP SCHEDULE

MARK	MFGR.	MODEL	GPM	FT-HD	ELECTRICAL HP	ELECTRICAL VOLT	ELECTRICAL PHASE	ACCESSORIES
SP-1	MYERS	WHV-5	50	20'	1/2	115	1	FLOAT SWITCH

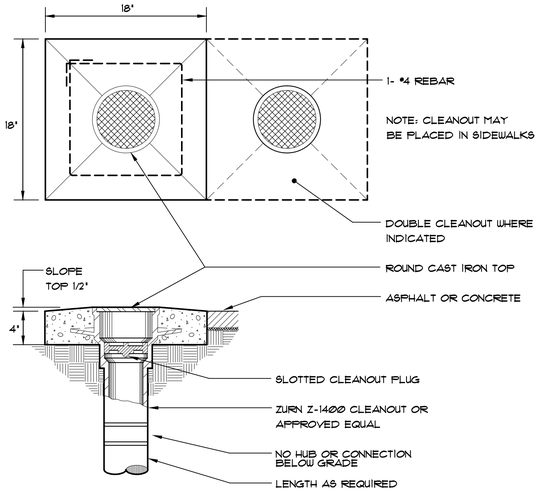

1 P101 **CLEANOUT DETAIL**
SCALE: N.T.S.

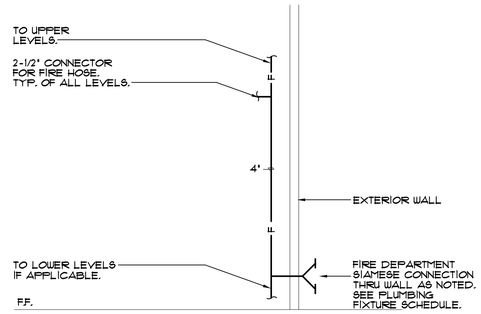

2 P101 **DRY STANDPIPE RISER DETAIL**
SCALE: N.T.S.

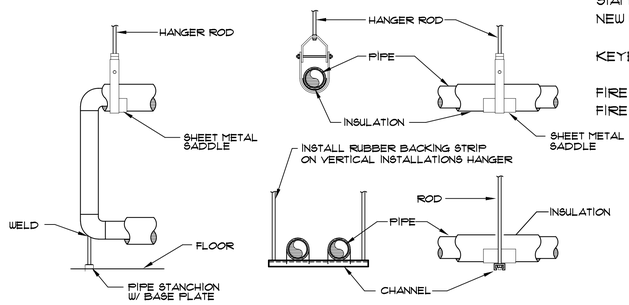

3 P101 **TYPICAL PIPE HANGER DETAIL**
SCALE: N.T.S.

LEGEND

	NEW	EXISTING
STORM DRAINAGE		
SANITARY SEWER (BURIED)		
COLD WATER LINE		E
FIRE LINE	F	EF
REFRIGERANT SUCTION	RS	ERS
REFRIGERANT LIQUID	RL	ERL
PIPE TO BE REMOVED		
MECHANICAL EQUIPMENT		
FLOOR DRAIN	FD	
TRENCH DRAIN	TD	
CLEANOUT	CO	ECO
DOMESTIC COLD WATER	DCW	
AIR HANDLING UNIT	AHU	
CONDENSING UNIT	CU	
WALL HYDRANT	WHD	
GROUND HYDRANT	GHD	
MANHOLE	MH	EMH
FIRE DEPARTMENT SIAMESE CONNECTION	FDSC	
NEW WORK INTERFACE		
KEYED SYMBOL	PARTIAL NO. / SHEET NO.	
FIRE HYDRANT	FH	EFH
FIRE DAMPER (VERTICAL)	FDR	EFDR

PLUMBING GENERAL NOTES

1. CONTRACTOR SHALL VISIT SITE PRIOR TO BID TO VERIFY THE EXACT LOCATION OF ALL EXISTING AND PROPOSED UTILITIES, AND SITE CONDITIONS PRIOR TO BEGINNING WORK. INCLUDE IN BID THE RELOCATION OF ALL EXISTING UTILITIES THAT WILL OBSTRUCT NEW CONSTRUCTION. INCLUDE IN BID ALL DEVELOPMENT FEES, DEPOSITS, MEASURING DEVICE FEES, AND ALL OTHER FEES RELATED TO THE ESTABLISHMENT OF UTILITY SERVICES FOR THE NEW STRUCTURE.
2. CONTRACTOR SHALL BE RESPONSIBLE FOR THE COMPLETE INSTALLATION OF ALL WORK RELATED TO PLUMBING UTILITIES INCLUDING: TRENCHING, BACKFILL, SUPPORTS, CLEAN-OUT PADS, SERVICE VALVES AND BOXES, SERVICE LINES, TESTING, CLEANING, AND STERILIZING.
3. CONTRACTOR SHALL COORDINATE CUTOFF OF EXISTING UTILITIES FOR NEW CONNECTIONS WITH LOCAL UTILITIES ENGINEERING OFFICIALS AND SHALL CONFORM TO THEIR REQUIREMENTS.
4. PROVIDE DIELECTRIC INSULATION FOR COPPER PIPE ANYWHERE IT CONTACTS DISSIMILAR METAL.
5. ANY WATER PIPE IN AN EXTERIOR WALL OR CEILING SPACE SHALL BE WRAPPED IN ONE INCH INSULATION TO PREVENT FREEZING, CONDENSATE DRAIN LINES IN CEILINGS, WALL OR INTERIOR SPACE SHALL BE INSULATED.
6. PROVIDE 4" THICK CONCRETE COLLARS AROUND ALL SITE CLEANOUTS (CO), AND PROVIDE SLOTTED BRASS PLUGS FOR ALL CLEANOUT TOPS.
7. PROVIDE ALL EXPOSED DOMESTIC WATER PIPING WITH INSULATION, ALUMINUM JACKETING AND HEAT TAPE AS SPECIFIED TO PREVENT FREEZING. COORDINATE WITH ELECTRICAL FOR HEAT TAPE POWER SOURCE CONNECTION POINTS.
8. PROVIDE UL RATED FIRE STOPPING AT PIPE AND DUCT PENETRATIONS OF FIRE RATED STRUCTURES. SYSTEM MUST BE RATED FOR THE STRUCTURE PENETRATED AND EQUIPMENT PENETRATING.

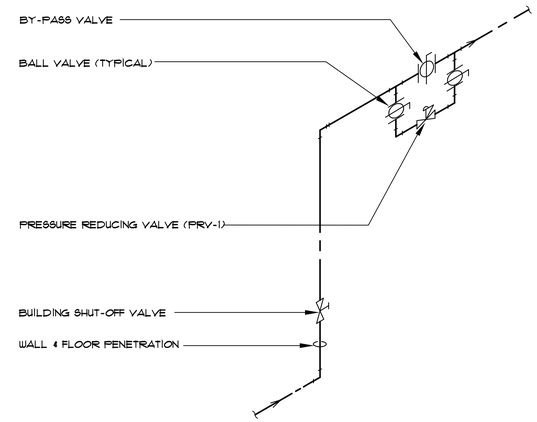

4 P101 **INCOMING WATER LINE DETAIL**
SCALE: N.T.S.

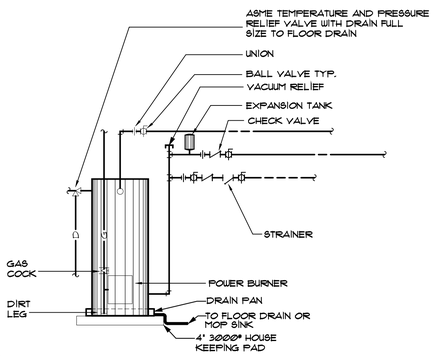

5 P101 **WATER HEATER CONNECTION DETAIL**
SCALE:

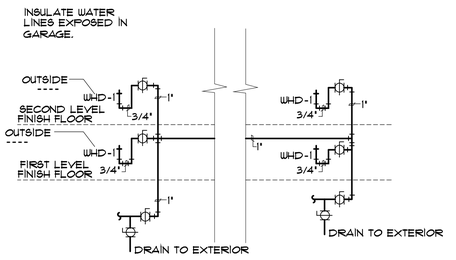

6 P101 **GARAGE WASHDOWN RISER DIAGRAM**
SCALE: N.T.S.

The seal appearing on this document was authorized by JOSE A. BERNAL P.E. 90861, on 2/04 2016

JOSE A. BERNAL 90861 LICENSED PROFESSIONAL ENGINEER

FLUID SYSTEMS, INC.
CONSULTING MECHANICAL ENGINEERS
REGISTRATION NUMBER: F-1161
12244 RATHMORE DR. • EL PASO, TEXAS 79928
OFFICE: (915) 856-9420 FAX: (915) 856-9011

100% CONSTRUCTION DOCUMENTS

REFERENCES – BENCHMARKS

REVISIONS

DATE	BY

ARCHITECTS SEAL

FINAL DESIGN SUBMITTAL NOT FOR CONSTRUCTION

SCALE
HOR: SIGVAN
VER: SIGVAN

DATE 02/04/16
DESIGN BY FSI
DRAWN BY FSI
CHKD BY J.A.B.
APPD. BY J.A.B.

PROJECT NAME

NORTHGATE TRANSFER CENTER

EL PASO, TEXAS.

CITY OF EL PASO
CAPITAL IMPROVEMENT DEPARTMENT

SHEET TITLE

LEGEND, SCHEDULES NOTES & DETAILS

SHEET
P101

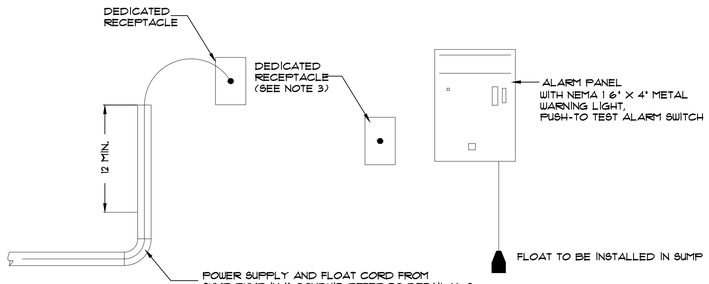

NOTES:
1. ALARM PANEL MAY BE DIRECT WIRED.
2. LABEL SUMP PUMP DEDICATED RECEPTACLE "FOR SUMP PUMP ONLY".
3. WAY LABEL ALARM PANEL RECEPTACLE "FOR ALARM PANEL ONLY".

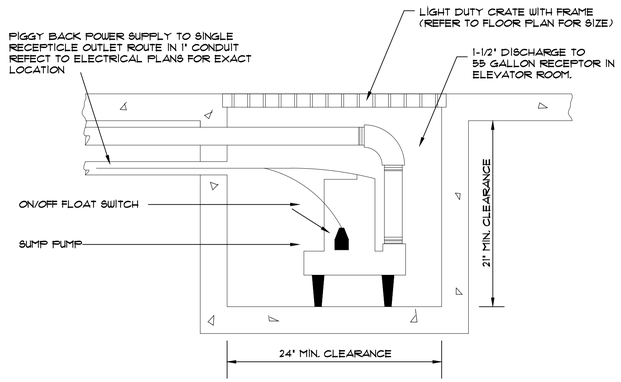

NOTE:
1. REFER TO STRUCTURAL DRAWINGS FOR BASIN DESIGN REQUIREMENTS.
2. NO PVC PIPING ALLOWED FOR PUMP DISCHARGE PIPING.

1 P102 ELEVATOR SUMP PUMP AND ALARM
SCALE: N.T.S.

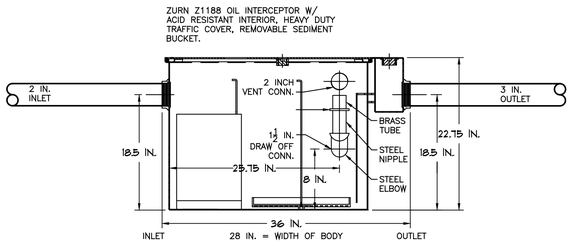

2 P102 OIL SEPARATOR DETAIL
SCALE: N.T.S.

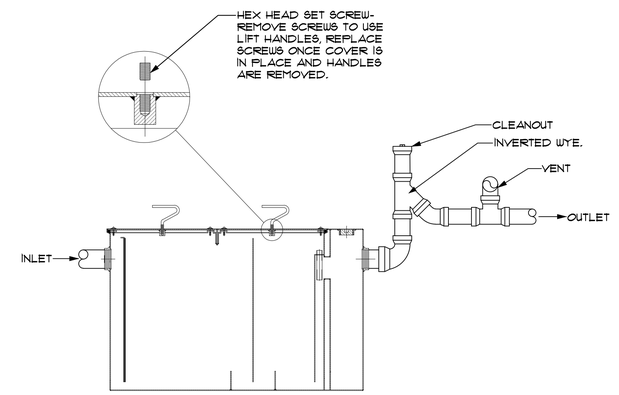

3 P102 CONCRETE GREASE INTERCEPTOR
SCALE: NTS

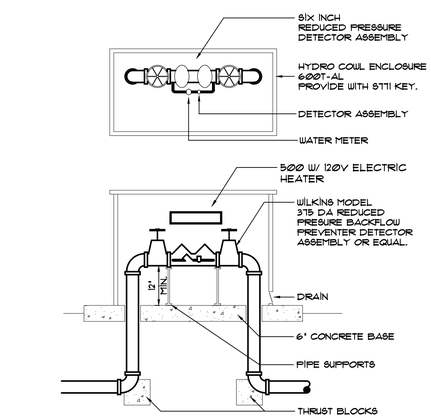

4 P102 FIRE LINE BACKFLOW PREVENTER DETAIL
SCALE: N.T.S.

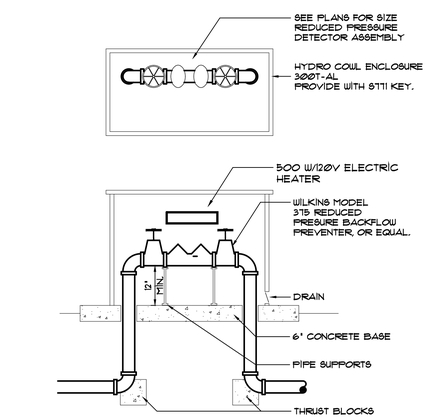

5 P102 DOMESTIC BACKFLOW PREVENTER DETAIL
SCALE: N.T.S.

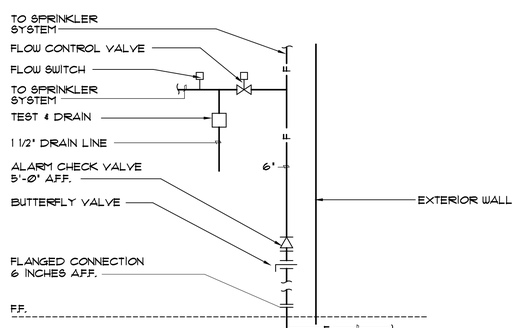

6 P102 FIRE LINE RISER DETAIL
NTS

The seal appearing on this document was authorized by JOSE A. BERNAL P.E. 90861, on 2/04/16

JOSE A. BERNAL 90861 LICENSED PROFESSIONAL ENGINEER

FLUID SYSTEMS, INC.
CONSULTING MECHANICAL ENGINEERS
REGISTRATION NUMBER: F-1161
12244 RATHMORE DR. • EL PASO, TEXAS 79928
OFFICE: (915) 856-9420 FAX: (915) 856-9011

100% CONSTRUCTION DOCUMENTS

02/04/2016 5:26PM \\CARL\Shared Documents FSI\FSI-Projects\FSI1500\1531 NE transit terminal\1531-P102.DWG

REFERENCES – BENCHMARKS

BY	REVISIONS	DATE

ARCHITECTS SEAL

FINAL DESIGN SUBMITTAL NOT FOR CONSTRUCTION

SCALE
HOR: SIGVAN
VER: SIGVAN

DATE 02/04/16
DESIGN BY FSI
DRAWN BY FSI
CHKD. BY J.A.B.
APPD. BY J.A.B.

PROJECT NAME
NORTHGATE TRANSFER CENTER
EL PASO, TEXAS.

CITY OF EL PASO
CAPITAL IMPROVEMENT DEPARTMENT

SHEET TITLE
DETAILS

SHEET
P102

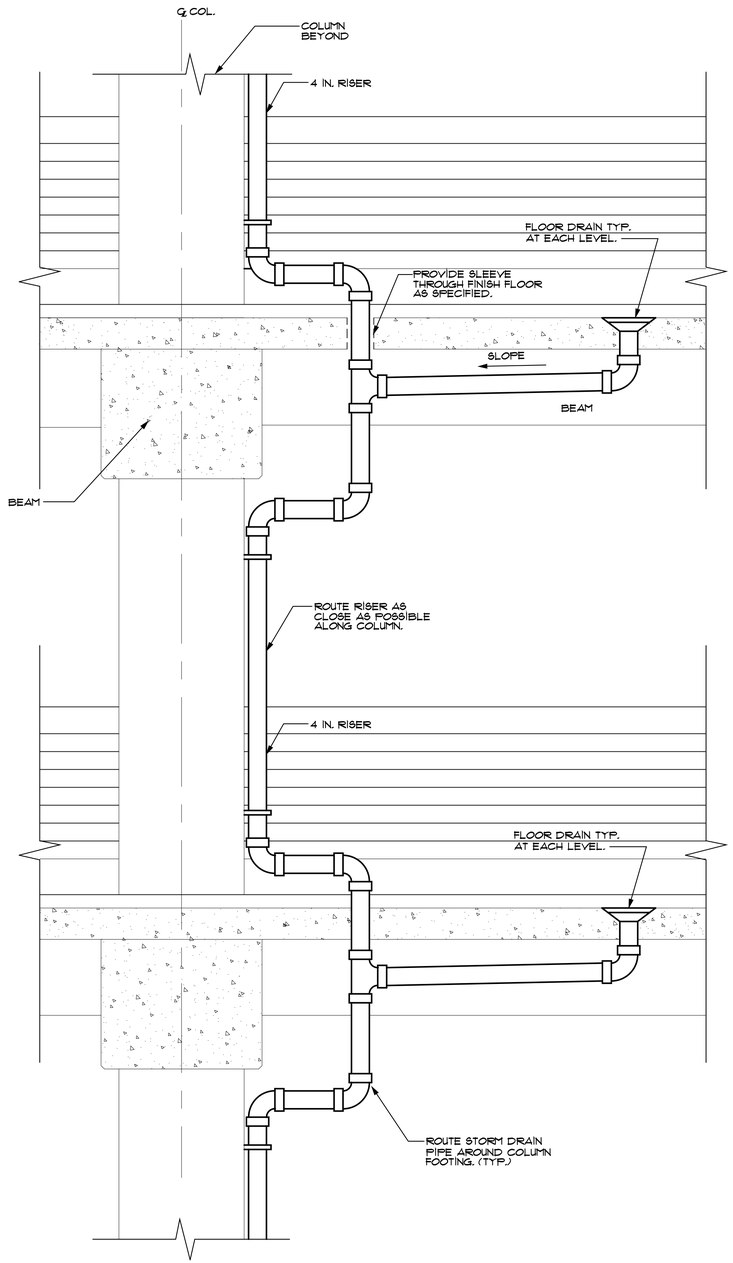

3 P103 WASH TO DRAIN SECTION DETAIL
SCALE: NTS

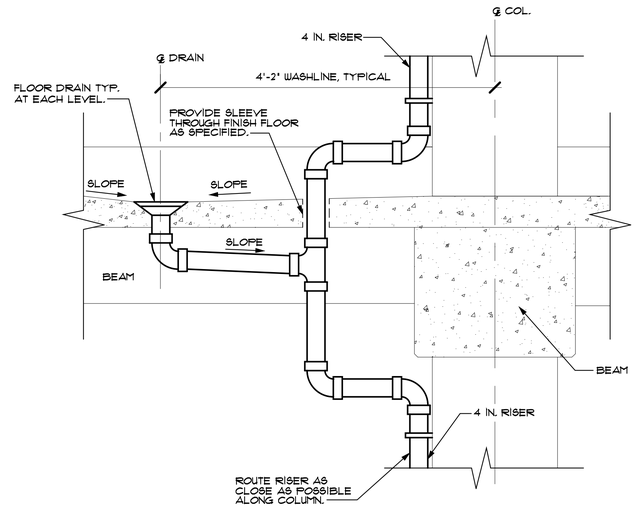

2 P103 WASH TO DRAIN SECTION DETAIL
SCALE: NTS

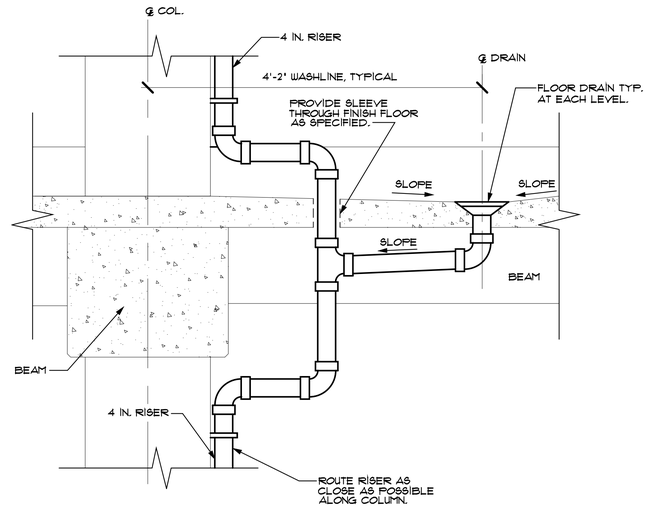

1 P103 WASH TO DRAIN SECTION DETAIL
SCALE: NTS

PLUMBING FIXTURE SCHEDULE

MARK	MFGR.	NAME	MODEL	H	C	D	V	E	ACCESSORIES
WC-1	ZURN		Z-5615-BWL	-	1"	3"	2"	-	CENTOCO MODEL 500CC38 SEAT (WHITE). ZURN Z-6000AV-DF-WS1 FLUSH VALVE, 1.28 GPF. PROVIDE DUAL FLUSH VALVE AND CARRIER.
WC-1H	ZURN		Z-5615-BWL	-	1"	3"	2"	-	CENTOCO MODEL 500CC38 SEAT (WHITE). ZURN Z-6000AV-DF-WS1 FLUSH VALVE, MOUNT CONTROLS ON WIDE SIDE, 1.28 GPF. PROVIDE DUAL FLUSH VALVE AND CARRIER.
U-1,1H	ZURN		Z-5755-U	-	-	2"	1-1/2"	-	W/ ZURN Z6003AV-ULF HIGH EFFICIENCY FLUSH VALVE, .125 GPF. MOUNTING HEIGHT REFER TO ARCHITECTURAL DRAWINGS. W/ CARRIER
L-1, 1H	ZURN		Z-5350	1/2"	1/2"	2"	1-1/2"	-	ZURN Z-81104-XL FAUCET, .5 GPM, McGUIRE 155A DRAIN, DEARBORN BRASS 751 P-TRAP, T45 B-1342 ANGLE LOOSE KEY STOPS, 9KAL GUARD, SEE ARCH. DWGS. FOR MOUNTING HEIGHT. PROVIDE W/ THERMOSTATIC MIXING VALVE.
L-2, 2H	ZURN		Z-5810	1/2"	1/2"	2"	1-1/2"	-	ZURN Z-81104-XL FAUCET, .5 GPM, McGUIRE 155A DRAIN, DEARBORN BRASS 751 P-TRAP, T45 B-1342 ANGLE LOOSE KEY STOPS, 9KAL GUARD, SEE ARCH. DWGS. FOR MOUNTING HEIGHT. PROVIDE W/ THERMOSTATIC MIXING VALVE.
L-3H	ADVANCE TABCO		7-PS-20	1/2"	1/2"	2"	1-1/2"	-	ZURN Z-83IR4 FAUCET, .5 GPM, McGUIRE 155A DRAIN, DEARBORN BRASS 751 P-TRAP, T45 B-1342 ANGLE LOOSE KEY STOPS, 9KAL GUARD, ZURN Z-1231 CONCEALED ARM CARRIER, SEE ARCH. FOR MOUNTING HEIGHT.
HB-1	CHICAGO		293	-	1/2"	-	-	–	W/ WATTS E-27 VACUUM BREAKER
CO	ZURN		ZN-1400	-	AS SHOWN			–	W/ NICKEL BRONZE TOP
EWC-1H	ELKAY		LVRCTL8WSK	-	1/2"	2"	1-1/2"	YES	8.0 GPH OF 50°F WATER @ 80°F AMBIENT, McGUIRE 155A DRAIN, DEARBORN BRASS 751 P-TRAP, McGUIRE 2165 ANGLE STOPS, ZURN Z-1225 CARRIER, 1/3 hp, 120V, 1ø. SEE ARCH. DWGS FOR MOUNTING HEIGHT. W/ BOTTLE FILLER
WHA	ZURN	SHOKTROL	Z-1700	-	-	-	-	YES	SIZE AS REQUIRED
ATP	PPP		PR-500	-	1/2"	-	-	–	W/ ADJUSTABLE FLOW CONTROL & MULTIPLE DISTRIBUTION UNIT WHERE REQUIRED. INSTALL 12"x12" ACCESS DOOR & ISOLATION VALVE AT EACH TRAP PRIMER LOCATION.
FD-1	ZURN		ZN-415	-	-	3"	2"	–	W/ NICKEL BRONZE STRAINER, AUTOMATIC TRAP PRIMER.
FD-2	ZURN		Z-534-TS	-	-	4"	-	-	TOP SECURED W/ SLOTTED SCREWS.
OS-1	ZURN		Z-1188	-	-	2"	1-1/2"	-	75 GPM CAPACITY W/ INTEGRAL STORAGE.
GHD-1	ZURN		Z1360-HD	-	3/4"	-	-	-	ENCASED, NON-FREEZE, GROUND HYDRANT W/HEAVY DUTY COVER. FLUSH W/ FINISH FLOOR, VACUUM BREAKER. EXTEND A 1/4 in. COPPER PIPE FROM DRAIN PORT TO PREVENT DAMAGE.
FDSC	CROKER		6430	-	-	-	-	-	4" x 2-1/2" x 2-1/2", FD SIAMESE CONNECTION.
WHD-1	ZURN	ECOTROL	Z1300	-	3/4"	-	-	-	ENCASED, NON-FREEZE, WALL HYDRANT W/ INTEGRAL BACKFLOW PREVENTER, FLUSH W/ FINISH FLOOR.
PRV	WILKINS		ZW-127-3B	-	2.5"	-	-	-	25 TO 75 PSI SPRING RANGE SET @ 55 PSI W/ Y-STRAINER & GAUGE.
SHR-1H	SYMMONS	SAFETYMIX	1-117-FS	1/2"	1/2"	3"	2"	-	PRESSURE BALANCING MIXING VALVE, WALL/HAND SHOWER W/FLEXIBLE METAL HOSE, IN LINE VACUUM BREAKER, WALL CONNECTION AND FLANGE, 30" SLIDE BAR AND DIVERTER VALVE. MOUNT CONTROL VALVE AS SHOWN IN ARCH DWGS. PROVIDE 1.0 GPM SHOWER HEAD.
RD	ZURN		ZC-100-C-GD	-	AS SHOWN			-	C. I. BODY & C. I. DOME, STRAINER W/ EXTENSION
DSN	ZURN		Z-199	-	AS SHOWN			-	
S-1	ELKAY	3-COMP.	RNSF83724	1/2"	1/2"	2"	1-1/2"	-	W/ DUAL LK940GN0ST4H GOOSENECK WITH WRIST BLADE HANDLES, DEARBORN BRASS 751 P-TRAP, HANDI LAV GUARD, T45 B-1342 ANGLE LOOSE KEY STOPS, AND STRAINERS. .5 GPM.
S-2	ELKAY	2-COMP.	LRAD3319	1/2"	1/2"	2"	1-1/2"	-	W/ LK800GN0ST4 GOOSENECK WITH WRIST BLADE HANDLES, DRAIN SYSTEM, DEARBORN BRASS 751 P-TRAP, HANDI LAV GUARD, T45 B-1342 ANGLE LOOSE KEY STOPS, .5 GPM.
S-3	ELKAY	1-COMP.	LRAD2219	1/2"	1/2"	2"	1-1/2"	-	W/ LK800GN0ST4 GOOSENECK WITH WRIST BLADE HANDLES, DRAIN SYSTEM, DEARBORN BRASS 751 P-TRAP, HANDI LAV GUARD, T45 B-1342 ANGLE LOOSE KEY STOPS, .5 GPM.
GT-1	ZURN		Z1172-900	-	-	3"	-	-	GREASE INTECEPTOR, 3" INLET/OUTLET, FLOW RATE 75 GPM, 65 GALLONS OF WATER AND 150 LBS OF GREASE CAPACITY.
FS-1	ZURN		Z-1910	-	-	3"	2"	–	W/ 3/4 GRATE AND ATP.
MSB	FIAT		MSB2424	-	1/2"	3"	2"	–	24"x24"x10", HOSE AND HOSE BRACKET, MOP HANGER, STAINLESS STEEL DRAIN, SERVICE FAUCET W/VACUUM BREAKER AND INTEGRAL STOPS.
HB-2	MAPA		MPH-24FP	-	1/2"	-	-	-	ROOF HOSE BIBB, NON FREEZE, NON DRAINING.

The seal appearing on this document was authorized by JOSE A. BERNAL P.E. 90861 on 2/04 2016

JOSE A. BERNAL 90861 LICENSED PROFESSIONAL ENGINEER

FLUID SYSTEMS, INC.
CONSULTING MECHANICAL ENGINEERS
REGISTRATION NUMBER: F-1161
12244 RATHMORE DR. • EL PASO, TEXAS 79928
OFFICE: (915) 856-9420 FAX: (915) 856-9011

100% CONSTRUCTION DOCUMENTS

02/04/2016 5:25PM \\CARL\Shared Documents FSI\FSI-Projects\FSI1500\1531 NE transit terminal\1531-P103.DWG

REFERENCES – BENCHMARKS

BY	REVISIONS	DATE

ARCHITECTS SEAL

FINAL DESIGN SUBMITTAL NOT FOR CONSTRUCTION

SCALE HOR: SIGVAN VER: SIGVAN
DATE 02/04/16
DESIGN BY FSI
DRAWN BY FSI
CHKD BY J.A.B.
APPD. BY J.A.B.

PROJECT NAME
NORTHGATE TRANSFER CENTER
EL PASO, TEXAS.

CITY OF EL PASO
CAPITAL IMPROVEMENT DEPARTMENT

SHEET TITLE
DETAILS & SCHEDULE

SHEET
P103

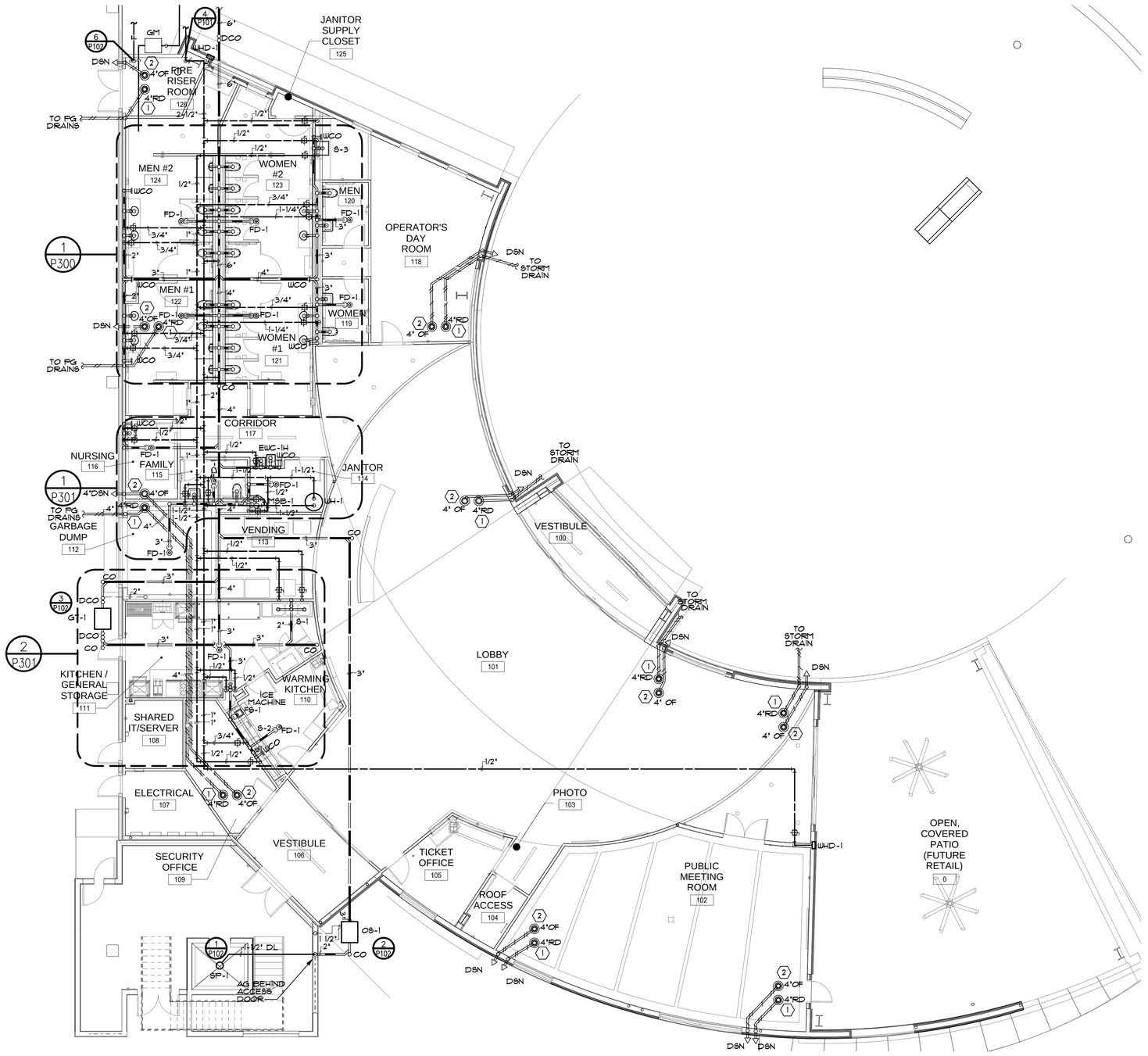

NEW PLUMBING PLAN – TRANSIT TERMINAL

SCALE: 1/8" = 1'–0"

KEYED NOTES

1. EXTEND LEADERS FROM ROOF DRAINS DOWN WALL TO STORM DRAIN PIPING. COORDINATE WITH CIVIL DRAWINGS.
2. EXTEND LEADERS FROM OVERFLOWS DOWN WALL TO DOWNSPOUT NOZZLES.

NOTES

1. NEW BUILDINGS SHALL HAVE A NFPA APPROVED FIRE SPRINKLER SYSTEM.
2. FIRE SPRINKLER HEADS SHALL BE LOCATED IN A SYMMETRICAL PATTERN RELATED TO CEILING FEATURES SUCH AS GRID BEAMS, LIGHT FIXTURES, DIFFUSERS, ETC. AND WHERE APPLICABLE HEADS SHALL BE LOCATED SYMMETRICALLY WITH THE CEILING GRID, CENTERED IN TWO DIRECTIONS.
3. SYSTEM SHALL BE INTERFACED WITH BUILDING FIRE AND SMOKE ALARM

The seal appearing on this document was authorized by JOSE A BERNAL, P.E. 90861 on 2/04 2016

JOSE A. BERNAL 90861 LICENSED PROFESSIONAL ENGINEER

FLUID SYSTEMS, INC.
CONSULTING MECHANICAL ENGINEERS
REGISTRATION NUMBER: F-1161
12244 RATHMORE DR. • EL PASO, TEXAS 79928
OFFICE: (915) 856-9420 FAX: (915) 856-9011

100% CONSTRUCTION DOCUMENTS

02/04/2016 5:24PM \\CARL\Shared Documents FSI\FSI-Projects\FSI1500\1531 NE transit terminal\1531-P200.DWG

REFERENCES – BENCHMARKS

DATE	REVISIONS	BY

ARCHITECTS SEAL

FINAL DESIGN SUBMITTAL NOT FOR CONSTRUCTION

SCALE
HOR: SHOWN
VER: SHOWN

DATE 02/04/16
DESIGN BY FSI
DRAWN BY FSI
CHECKED BY J.A.B.
APPD. BY J.A.B.

PROJECT NAME
NORTHGATE TRANSFER CENTER
EL PASO, TEXAS.

CITY OF EL PASO
CAPITAL IMPROVEMENT DEPARTMENT

SHEET TITLE
NEW PLUMBING PLAN TRANSIT TERMINAL

SHEET
P200

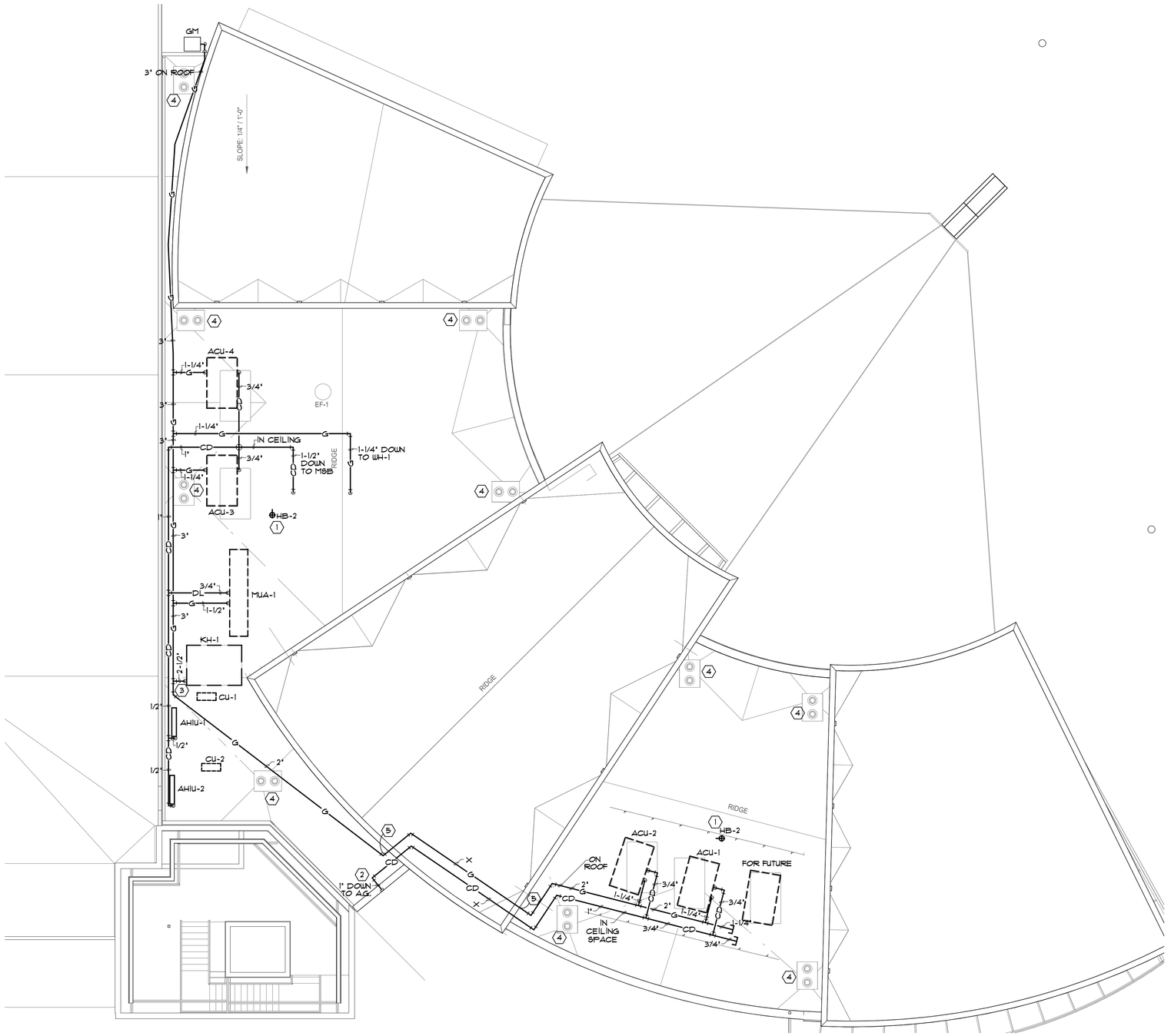

KEYED NOTES

1. PROVIDE FREEZE PROOF ROOF MOUNTED HOSE BIBB. CONNECT TO DOMESTIC COLD WATER PIPING IN CEILING SPACE.
2. PROVIDE 2in. AIR GAP WITH P-TRAP AND TRAP PRIMER BEHIND ACCESS DOOR. EXTEND TO WASTE SYSTEM.
3. EXTEND 2-1/2in. GAS TO KITCHEN EQUIPMENT. INSTALL SOLENOID VALVE AND PROVIDE 2-1/2" MANIFOLD. EXTEND 1" SUPPLY TO EQUIPMENT, SEE ARCHITECTURE DRAWINGS.
4. SEE P200 FOR ROOF DRAIN/OVERFLOW PIPE ROUTING.
5. PENETRATE WALL, RUN GAS INSIDE AND EXTEND TO OTHER ROOF.

NOTES

1. NEW BUILDINGS SHALL HAVE A NFPA APPROVED FIRE SPRINKLER SYSTEM.
2. FIRE SPRINKLER HEADS SHALL BE LOCATED IN A SYMMETRICAL PATTERN RELATED TO CEILING FEATURES SUCH AS GRID BEAMS, LIGHT FIXTURES, DIFFUSERS, ETC. AND WHERE APPLICABLE HEADS SHALL BE LOCATED SYMMETRICALLY WITH THE CEILING GRID, CENTERED IN TWO DIRECTIONS.
3. SYSTEM SHALL BE INTERFACED WITH BUILDING FIRE AND SMOKE ALARM

GAS LOAD

MARK	CFH
ACU-1	100
ACU-2	100
ACU-3	100
ACU-4	110
FUTURE	100
KITCHEN	600
WH	120
TOTAL:	1230

ROOF PLAN – TRANSIT TERMINAL

SCALE: 1/8" = 1'-0"

The seal appearing on this document was authorized by JOSE A. BERNAL P.E. 90861, on 2/04 2016

JOSE A. BERNAL 90861 LICENSED PROFESSIONAL ENGINEER

FLUID SYSTEMS, INC.
CONSULTING MECHANICAL ENGINEERS
REGISTRATION NUMBER: F-1161
12244 RATHMORE DR. • EL PASO, TEXAS 79928
OFFICE: (915) 856-9420 FAX: (915) 856-9011

100% CONSTRUCTION DOCUMENTS

02/04/2016 5:23PM \\CARL\Shared Documents FSI\FSI-Projects\FSI1500\1531 NE transit terminal\1531-P201.DWG

REFERENCES – BENCHMARKS

DATE	REVISIONS	BY

ARCHITECTS SEAL

FINAL DESIGN SUBMITTAL NOT FOR CONSTRUCTION

SCALE
HOR: SIGVARN
VER: SIGVARN

DATE	02/04/16
DESIGN BY	FSI
DRAWN BY	FSI
CHKD. BY	J.A.B.
APPD. BY	J.A.B.

PROJECT NAME

NORTHGATE TRANSFER CENTER

EL PASO, TEXAS.

CITY OF EL PASO
CAPITAL IMPROVEMENT DEPARTMENT

SHEET TITLE

ROOF PLAN
TRANSIT TERMINAL

SHEET
P201

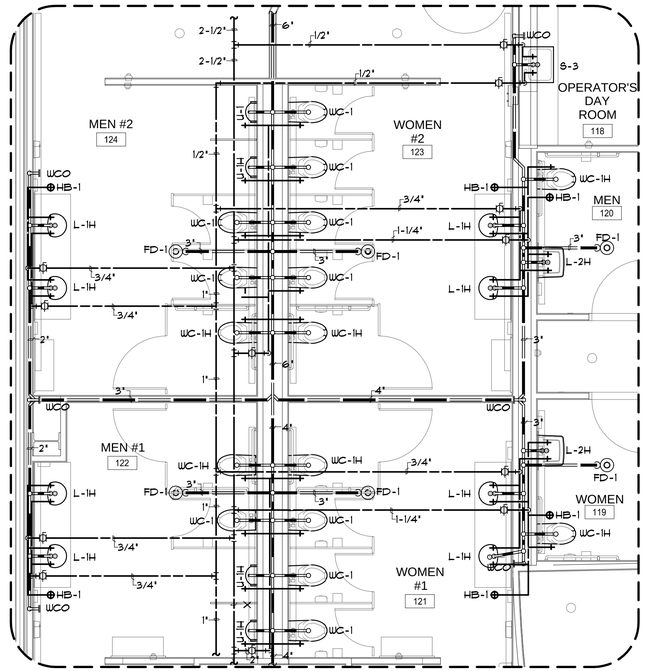

1 P300 ENLARGED PLUMBING PLAN

SCALE: 1/4" = 1'-0"

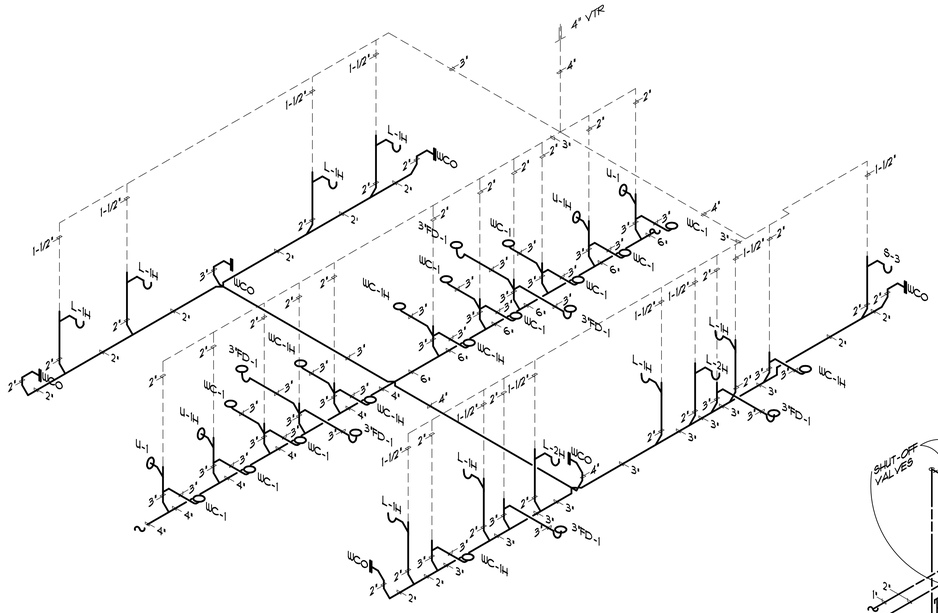

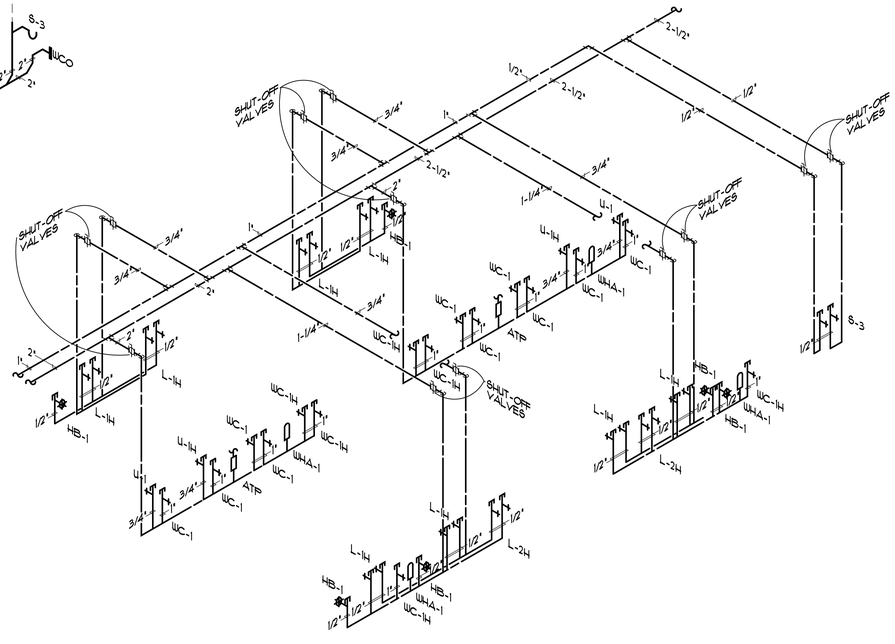

1 P300 WASTE & WATER RISER

SCALE: NTS

02/04/2016 5:22PM \\CARL\Shared Documents FSI\FSI-Projects\FSI1500\1531 NE transit terminal\1531-P300.DWG

100% CONSTRUCTION DOCUMENTS

The seal appearing on this document was authorized by JOSE A. BERNAL P.E. 90861, on 2/04 2016

JOSE A. BERNAL 90861 LICENSED PROFESSIONAL ENGINEER

FLUID SYSTEMS, INC.
CONSULTING MECHANICAL ENGINEERS
REGISTRATION NUMBER: F-1161
12244 RATHMORE DR. • EL PASO, TEXAS 79928
OFFICE: (915) 856-9420 FAX: (915) 856-9011

REFERENCES – BENCHMARKS

DATE	REVISIONS	BY

ARCHITECTS SEAL

FINAL DESIGN SUBMITTAL NOT FOR CONSTRUCTION

SCALE
HOR: SIGVAN
VER: SIGVAN

DATE	02/04/16
DESIGN BY	FSI
DRAWN BY	FSI
CHKD. BY	J.A.B.
APPD. BY	J.A.B.

PROJECT NAME

NORTHGATE TRANSFER CENTER

EL PASO, TEXAS.

CITY OF EL PASO

CAPITAL IMPROVEMENT DEPARTMENT

SHEET TITLE

ENLARGED PLUMBING, WASTE & WATER RISER DIAGRAM

SHEET

P300

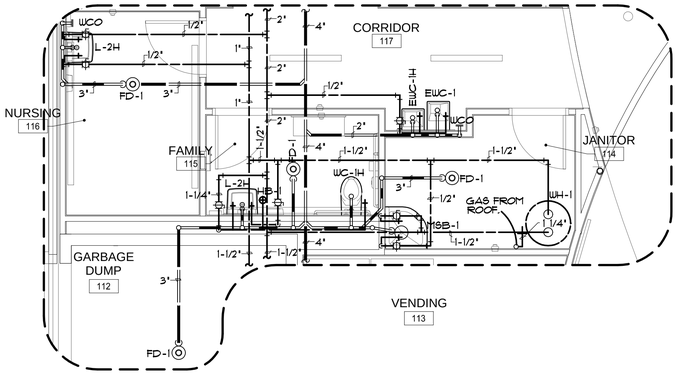

1 P301 ENLARGED PLUMBING PLAN

SCALE: 1/4" = 1'-0"

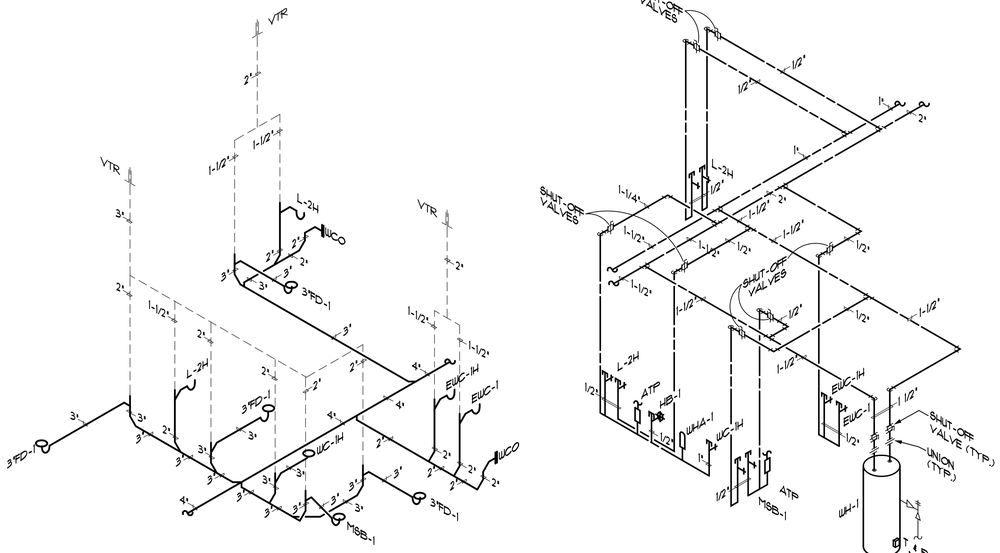

1 P301 WASTE & WATER RISER

SCALE: NTS

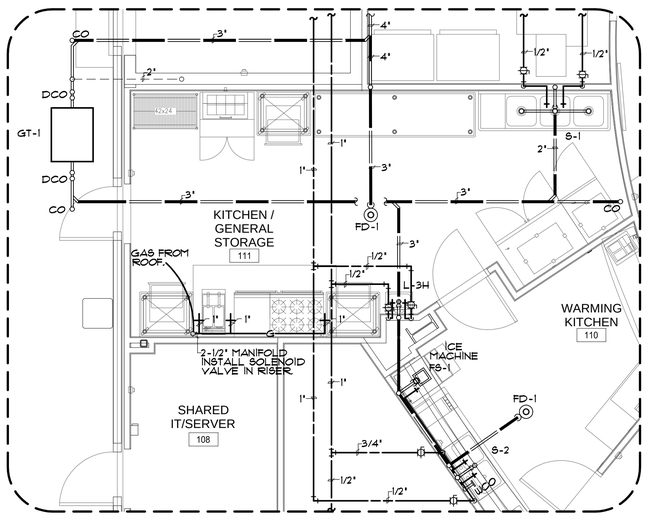

2 P301 ENLARGED PLUMBING PLAN

SCALE: 1/4" = 1'-0"

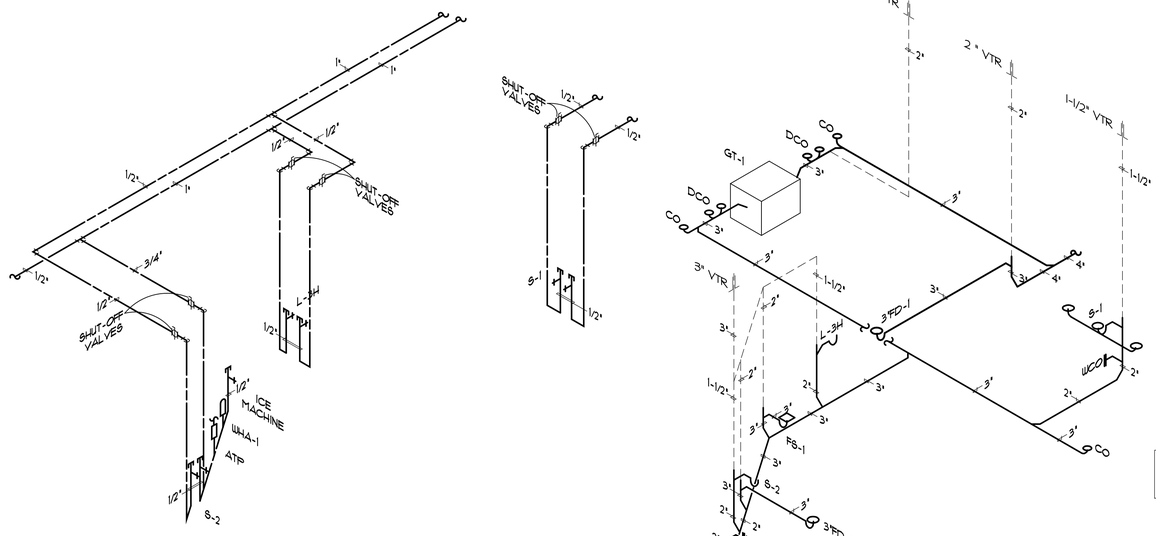

2 P301 WASTE & WATER RISER

SCALE: NTS

The seal appearing on this document was authorized by JOSE A. BERNAL P.E. 90861, on 2/04 2016

JOSE A. BERNAL 90861 LICENSED PROFESSIONAL ENGINEER

FLUID SYSTEMS, INC.
CONSULTING MECHANICAL ENGINEERS
REGISTRATION NUMBER: F-1161
12244 RATHMORE DR. ♦ EL PASO, TEXAS 79928
OFFICE: (915) 856-9420 FAX: (915) 856-9011

100% CONSTRUCTION DOCUMENTS

02/04/2016 5:20PM \\CARL\Shared Documents FSI\FSI-Projects\FSI1500\1531 NE transit terminal\1531-P301.DWG

REFERENCES – BENCHMARKS

DATE	REVISIONS	BY

ARCHITECTS SEAL

FINAL DESIGN SUBMITTAL NOT FOR CONSTRUCTION

SCALE
HOR: SIGVAN
VER: SIGVAN

DATE	02/04/16
DESIGN BY	FS
DRAWN BY	FS
CHKD. BY	LAB
APPD. BY	LAB

PROJECT NAME

NORTHGATE TRANSFER CENTER

EL PASO, TEXAS.

CITY OF EL PASO

CAPITAL IMPROVEMENT DEPARTMENT

SHEET TITLE

ENLARGED PLUMBING, WASTE & WATER RISER DIAGRAM

SHEET

P301

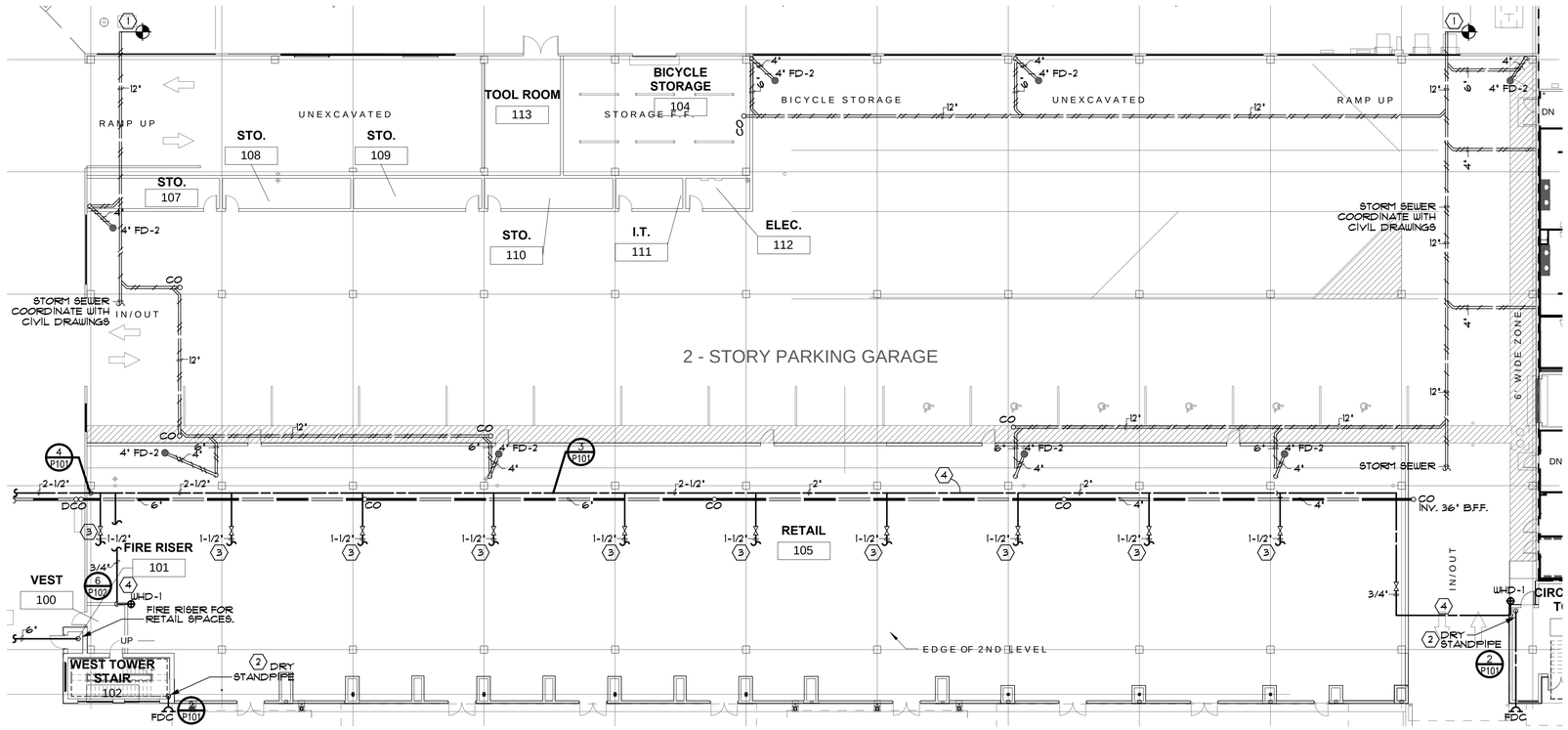

NEW PLUMBING PLAN – PARKING GARAGE 1ST LEVEL

SCALE: 1/16" = 1'-0"

FIRE PROTECTION NOTES

1. NEW BUILDING ADDITION SHALL HAVE A NFPA APPROVED FIRE SPRINKLER SYSTEM. EXTEND FIRE LINE FROM EXISTING. PROVIDE THREE INCH WATER SUPPLY TO FIRE PROTECTION SKID. SEE SPECIFICATIONS FOR ADDITIONAL REQUIREMENTS.
2. FIRE SPRINKLER HEADS SHALL BE LOCATED IN A SYMMETRICAL PATTERN RELATED TO CEILING FEATURES SUCH AS GRID BEAMS, LIGHT FIXTURES, DIFFUSERS, ETC. AND WHERE APPLICABLE HEADS SHALL BE LOCATED SYMMETRICALLY WITH THE CEILING GRID, CENTERED IN TWO DIRECTIONS.
3. SYSTEM SHALL BE INTERFACED WITH BUILDING FIRE AND SMOKE ALARM

KEYED NOTES

1. EXTEND DRAIN LINES FROM FLOOR DRAINS TO STORM DRAIN PIPING, COORDINATE WITH CIVIL DRAWINGS.
2. PROVIDE SYSTEM OF DRY STAND PIPES AS REQUIRED BY NFPA.
3. RETAIL SPACES TO BE PROVIDED WITH 1-1/2 INCH VALVED WATER SUPPLY FOR FUTURE TENANT.
4. PROVIDE HEAT TAPE AND INSULATION ON ALL COLD WATER DOMESTIC PIPES.

The seal appearing on this document was authorized by JOSE A. BERNAL, P.E. 90861, on 3/04 2016

JOSE A. BERNAL 90861 LICENSED PROFESSIONAL ENGINEER

FLUID SYSTEMS, INC.
CONSULTING MECHANICAL ENGINEERS
REGISTRATION NUMBER: F-1161
12244 RATHMORE DR. • EL PASO, TEXAS 79928
OFFICE: (915) 856-9420 FAX: (915) 856-9011

100% CONSTRUCTION DOCUMENTS

03/03/2016 4:09PM \\CARL\Shared Documents FSI\FSI-Projects\FSI1500\1531 NE transit terminal\1531-PG200.DWG

REFERENCES – BENCHMARKS

DATE	REVISIONS	BY

ARCHITECTS SEAL

SCALE HOR: SIGVAN VER: SIGVAN

DATE 03/04/16
DESIGN BY FSI
DRAWN BY FSI
CHKD. BY J.A.B.
APPD. BY J.A.B.

PROJECT NAME
NORTHGATE TRANSFER CENTER
EL PASO, TEXAS.

CITY OF EL PASO
CAPITAL IMPROVEMENT DEPARTMENT

SHEET TITLE
NEW PLUMBING PLAN
PARKING GARAGE
FIRST LEVEL

SHEET
PG200

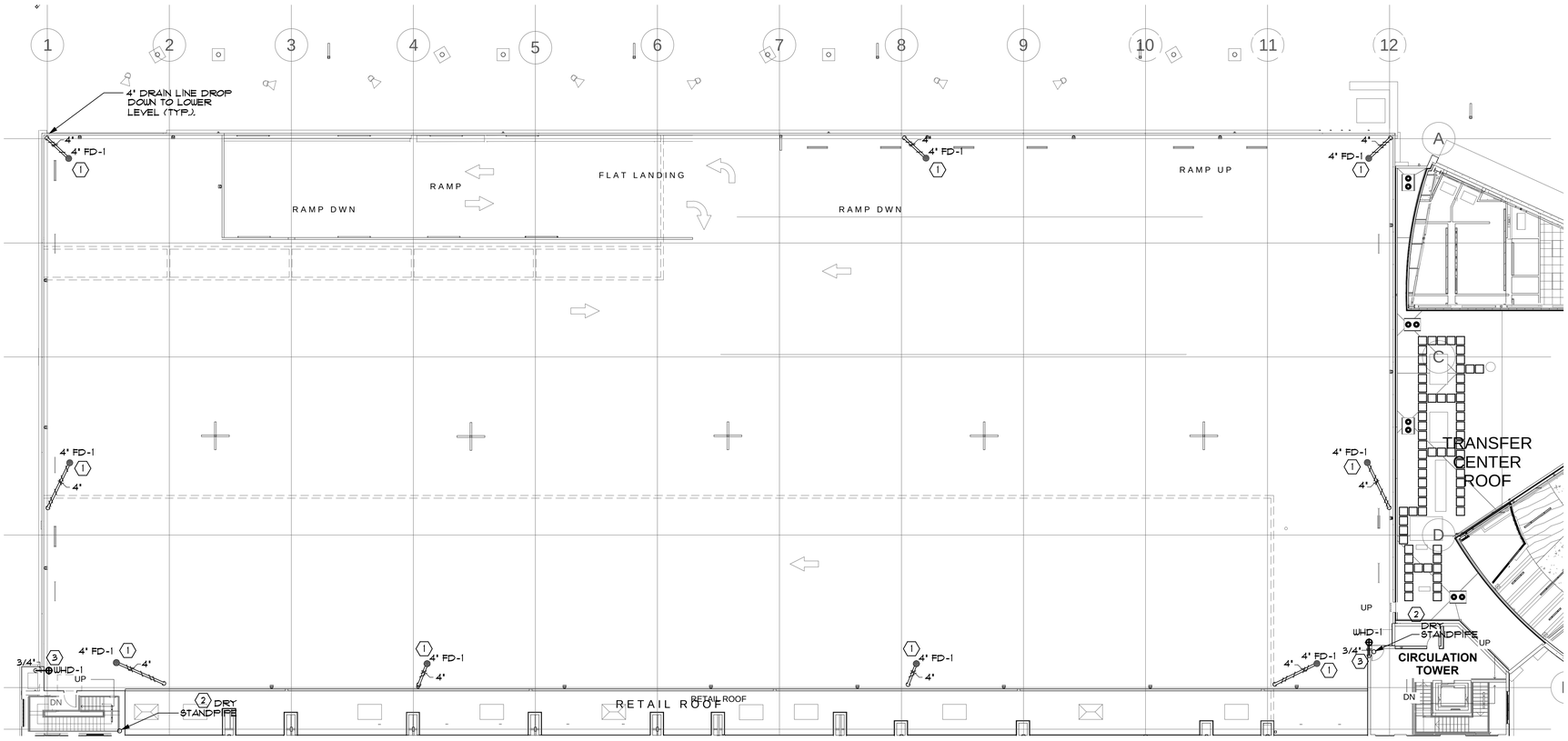

NEW PLUMBING PLAN – PARKING GARAGE 2ND LEVEL

SCALE: 1/16" = 1'-0"

KEYED NOTES

1. FLOOR DRAIN LINES TO EXTEND DOWN TO FLOOR BELOW TO STORM DRAIN.
2. PROVIDE SYSTEM OF DRY STAND PIPES AS REQUIRED BY NFPA.
3. PROVIDE HEAT TAPE AND INSULATION ON ALL COLD WATER DOMESTIC PIPES.

The seal appearing on this document was authorized by JOSE A. BERNAL, P.E. 90861, on 3/04 2016

JOSE A. BERNAL 90861 LICENSED PROFESSIONAL ENGINEER

FLUID SYSTEMS, INC.
CONSULTING MECHANICAL ENGINEERS
REGISTRATION NUMBER: F-1161
12244 RATHMORE DR. • EL PASO, TEXAS 79928
OFFICE: (915) 856-9420 FAX: (915) 856-9011

100% CONSTRUCTION DOCUMENTS

03/03/2016 4:11PM \\CARL\Shared Documents FSI\FSI-Projects\FSI1500\1531 NE transit terminal\1531-PG201.DWG

REFERENCES – BENCHMARKS

DATE	REVISIONS	BY

ARCHITECTS SEAL

SCALE HOR: SIGVAN VER: SIGVAN

DATE 03/04/16
DESIGN BY FSI
DRAWN BY FSI
CHKD. BY J.A.B.
APPD. BY J.A.B.

PROJECT NAME

NORTHGATE TRANSFER CENTER

EL PASO, TEXAS.

CITY OF EL PASO
CAPITAL IMPROVEMENT DEPARTMENT

SHEET TITLE

NEW PLUMBING PLAN PARKING GARAGE SECOND LEVEL

SHEET PG201

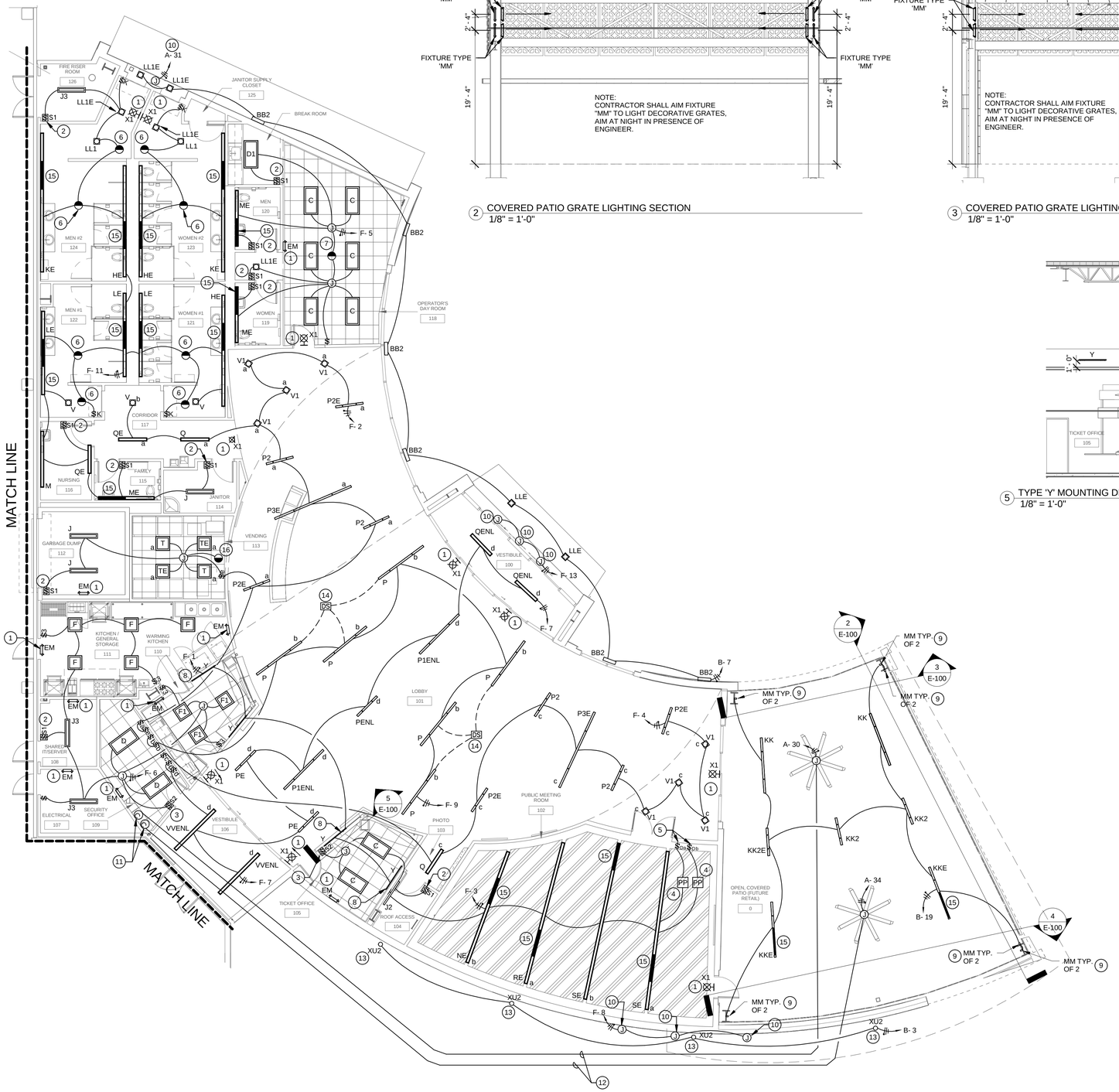

1 TRANSFER CENTER LIGHTING PLAN
1/8" = 1'-0"

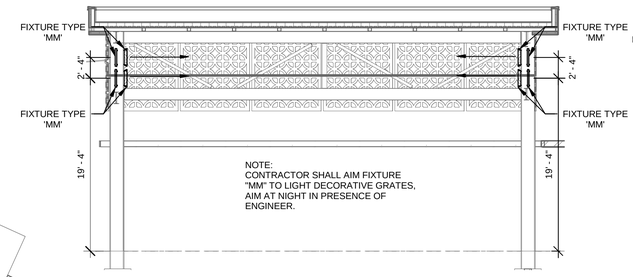

2 COVERED PATIO GRATE LIGHTING SECTION
1/8" = 1'-0"

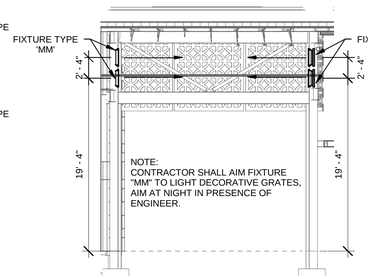

3 COVERED PATIO GRATE LIGHTING SECTION
1/8" = 1'-0"

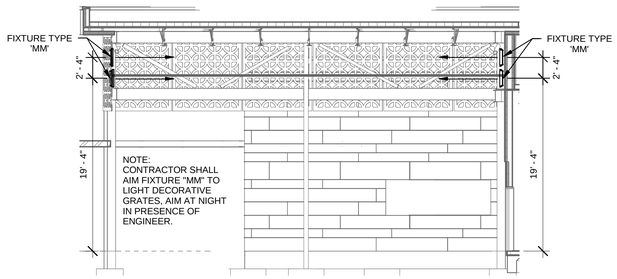

4 COVERED PATIO GRATE LIGHTING SECTION
1/8" = 1'-0"

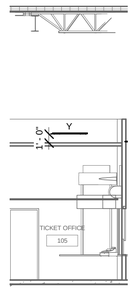

5 TYPE 'Y' MOUNTING DETAIL (TYP.)
1/8" = 1'-0"

KEYED NOTES E-100

1. ALL EXITS AND EMERGENCY LIGHTS MUST BE CONNECTED TO UNSWITCHED HOT CONDUCTOR.
2. PROVIDE AND INSTALL WALL MOUNTED DUAL TECHNOLOGY OCCUPANCY SENSOR. SENSOR TO BE HUBBELL LH MT S 1 G IV OR EQUAL. WIRE PER MANUFACTURER'S INSTALLATION INSTRUCTIONS. SEE DETAIL 1/E-500 ON SHEET E-500
3. PROVIDE AND INSTALL WALL MOUNTED DUAL TECHNOLOGY OCCUPANCY SENSOR. SENSOR TO BE HUBBELL LH MT D 2 G IV OR EQUAL. SENSOR TO BE PROVIDED WITH TWO BUTTONS. CONNECT EACH BUTTON TO ONE LEAD ON EACH LIGHT FIXTURE. ONE BUTTON SHALL CONTROL 50% OF EACH FIXTURE IN ROOM AND BE BE SET TO AUTO-ON/AUTO-OFF. OTHER BUTTON SHALL CONTROL 50% OF EACH FIXTURE IN ROOM AND BE SET TO MANUAL-ON/AUTO-OFF. SEE DETAIL 2/E-500 ON SHEET E-500 FOR OCCUPANCY SENSOR WIRING.
4. PROVIDE AND INSTALL POWER PACK ABOVE ACCESSIBLE CEILING FOR DIMMER SWITCH. POWER PACK TO BE LUTRON PP-120H OR EQUAL. MAKE CONNECTIONS TO LIGHT FIXTURES AND DIMMER. INSTALL POWER PACK INSIDE 8"X8"X4" J-BOX ABOVE CEILING. SEE DETAIL 3/E-500 ON SHEET E-500
5. PROVIDE AND INSTALL 0-10V DIMMER SWITCH. DIMMER TO BE LUTRON DIVA DVTV-IV. DIMMER SWITCH MUST BE COMPATIBLE WITH LIGHT FIXTURE. COORDINATE WITH LIGHT FIXTURE MANUFACTURER FOR COMPATIBLE DIMMERS. MAKE CONNECTIONS TO POWER PACK ABOVE CEILING. SEE DETAIL 3/E-500 ON SHEET E-500. EACH DIMMER MUST BE INSTALLED IN INDIVIDUAL BOX.
6. PROVIDE AND INSTALL CEILING MOUNTED DUAL TECHNOLOGY OCCUPANCY SENSOR. SENSOR TO BE HUBBELL OMNIDT2000BP1273 OR EQUAL. OCCUPANCY SENSOR IN RESTROOM MUST BE CONNECTED IN PARALLEL SO BOTH SENSORS CONTROL ALL LIGHTS.
7. PROVIDE AND INSTALL CEILING MOUNTED DUAL TECHNOLOGY OCCUPANCY SENSOR. SENSOR TO BE HUBBELL OMNIDT1000BP1273 OR EQUAL.
8. FIXTURE TYPE 'Y' TO BE MOUNTED ABOVE CELING OF ROOM. INSTALL ON WALL 12" ABOVE ROOM CEILING. FIXTURE MUST BE AIMED TO CEILING. MUST BE AIMED IN PRESENCE OF ENGINEER. COORDINATE WITH ARCHITECT FOR EXACT MOUNTING LOCATION BEFORE DOING ANY WORK. SEE DETAIL 5 ON THIS SHEET. (TYPICAL FOR WARMING KITCHEN AND TICKET OFFICE ROOM)
9. PROVIDE AND INSTALL TWO FIXTURES TYPE 'MM' MOUNTED ON COLUMN. ONE FIXTURE TO BE INSTALLED AT 19'-8" A.F.F. TO CENTER AND ANOTHER FIXTURE TO BE INSTALLED AT 22'-0" A.F.F. TO CENTER. SEE COVER PATIO GRATES LIGHTING SECTIONS ON THIS SHEET. COORDINATE WITH ARCHITECT BEFORE DOING ANY WORK.
10. PROVIDE AND INSTALL J-BOX WITH WEATHER PROOF COVER ON BUILDING FACADE FOR SIGN. COORDINATE WITH ARCHITECT AND OWNER FOR EXACT LOCATION BEFORE DOING ANY WORK. THIS CIRCUIT CONTROLLED BY TIMER CONTACTOR. USE 1/2" CONDUIT WITH 2-#10 CU. CONDRS. AND 1-#10 CU. GND.
11. PROVIDE AND INSTALL PATIO CEILING FAN CONTROLLER ON WALL AT 48" A.F.F. INSTALL 3/4" CONDUIT WITH 10-V CAT 5 CABLE WITH RJ45 CONNECTOR AND MAKE CONNECTIONS TO CEILING FAN IN PATIO. COORDINATE WITH FAN MANUFACTURER FOR EXACT WIRING REQUIREMENTS BEFORE DOING ANY WORK.
12. PROVIDE AND INSTALL 3/4" CONDUIT WITG 10-V CAT5 CABLE WITH RJ5 CONNECTOR FROM FAN CONTROLLER TO CEILING FAN IN PATIO. THIS ROUTE IS SHOWN ONLY FOR CLARIFICATION PURPOSES. CONTRACTOR TO FIELD VERIFY EXACT RUN AND LENGHT OF CAT5 CABLE REQUIRED.
13. FIXTURE TO BE MOUNTED FLUSH WITH PLANTER. FIXTURE TO BE 6" FROM WALL. COORDINATE EXACT MOUNTING LOCATION WITH ARCHITECT.
14. PROVIDE AND INSTALL HUBBELL DLC7 DAYLIGHTING CONTROL SENSOR. INSTALL AS PER MANUFACTURER'S INSTALLATION MANUAL. SENSOR TO CONTROL THREE FIXTURES AS SHOWN. SEE DETAIL 6/E-500 ON SHEET E-500 FOR DAYLIGHTING CONTROL WIRING. SENSOR MUST BE CALIBRATED TO SENSE LIGHTING LEVELS AT 30" A.F.F. SENSOR TO BE SET TO MAINTAIN 30 FC AVERAGE. INSTALL SENSOR MOUNTED ON J-BOX ON CEILING JOISTS.
15. THIS 4FT SECTION OF FIXTURE TO BE PROVIDED WITH EMERGENCY DRIVER.
16. PROVIDE AND INSTALL SENSOR ON CEILING TO CONTROL 1 OF 2 SWITCH LEGS. OTHER SWITCHED LEG TO TO BE CONTROLED BY SWITCH A ONLY. SENSOR TO BE ON SWITCH A AND THEN TO FIXTURE.

ALPHA ENGINEERING, INC.
ENGINEERING CONSULTANTS
1818 E. RIO GRANDE • EL PASO, TEXAS 79902
TEL. (915) 838-9900 • FAX. (915) 838-9909
REGISTRATION # F005236

2-4-2016

REFERENCES — BENCHMARKS

ARCHITECTS SEAL

DATE	REVISIONS	BY

SCALE
HOR: SHOWN
VER: SHOWN

DATE 11/20/15
DESIGNED BY Designer
DRAWN BY Author
CHKD BY Approver
APPD BY Approver

PROJECT NAME
NORTHGATE TRANSFER CENTER
EL PASO, TEXAS.

CITY OF EL PASO
CAPITAL IMPROVEMENT DEPARTMENT

SHEET TITLE
TRANSFER CENTER LIGHTING PLAN

SHEET
E-100

1 TRANSFER CENTER POWER PLAN
1/8" = 1'-0"

2 ENLARGED POWER PLAN
3/16" = 1'-0"

KEYED NOTES E-200 (#)

1 PROVIDE GFI RECEPTACLE WITH WEATHER PROOF COVER.
2 PROVIDE AND INSTALL RECEPTACLE AT 96" A.F.F. FOR POWER TO TELEVISIONS. COORDINATE WITH ARCHITECT AND OWNER FOR EXACT LOCATION.
3 MAKE CONNECTIONS TO AUTOMATIC DOOR OPENER. COORDINATE WITH ARCHITECT FOR EXACT LOCATION AND REQUIREMENTS BEFORE DOING ANY WORK.
4 PROVIDE AND INSTALL FLOOR BOX WITH TWO DUPLEX RECEPTACLES AND SEPARATE SIDE FOR COMMUNICATIONS. FLOOR BOX TO BE WIREMOLD EFB6S-OG OR EQUAL. COORDINATE WITH ARCHITECT FOR EXACT LOCATION BEFORE DOING ANY WORK.
5 APPROXIMATE LOCATION OF AHIU-1 AND AHIU-2. COORDINATE WITH MECHANICAL DRAWINGS FOR EXACT LOCATION.
6 RECEPTACLE TO BE MOUNTED AT 45" A.F.F. ON COUNTER. INSTALL RECEPTACLE HORIZONTALLY. COORDINATE WITH ARCHITECT FOR EXACT LOCATION BEFORE DOING ANY WORK.
7 RECEPTACLE TO BE MOUNTED AT 30" A.F.F. ON SIDE OF COUNTER. COORDINATE WITH ARCHITECT FOR EXACT LOCATION BEFORE DOING ANY WORK.
8 SWITCH FOR HOOD LIGHTS. MAKE CONNECTIONS TO HOOD LIGHTS AS NECESSARY. COORDINATE WITH MECHANICAL PLANS BEFOR DOING ANY WORK.
9 PROVIDE AND INSTALL GFI RECEPTACLE FOR MICROWAVE. CONTRACTOR TO VERIFY EXACT LOCATION WITH ARCHITECT BEFORE DOING ANY WORK.
10 PROVIDE AND INSTALL J-BOX AT 48" A.F.F. WITH CIRCUIT NOTED FOR POWER TO FIRE ALARM CONTROL PANEL.
11 PROVIDE AND INSTALL RECEPTACLE AT 48" A.F.F. WITH CIRCUIT NOTED FOR POWER TO INSTRUSION ALARM CONTROL PANEL (BY OTHERS). VERIFY EXACT LOCATION BEFORE DOING ANY WORK.
12 PROVIDE AND INSTALL RECEPTACLE AT 48" A.F.F. WITH CIRCUIT NOTED FOR POWER TO ACCESS CONTROL PANEL (BY OTHERS). VERIFY EXACT LOCATION BEFORE DOING ANY WORK.
13 PROVIDE AND INSTALL J-BOX AT 44" A.F.F. FOR POWER TO HOOD CONTROL PANEL. COORDINATE WITH MECHANICAL PLANS AND HOOD INSTALLER FOR EXACT HOOD CONTROL REQUIREMENTS BEFORE DOING ANY WORK. ALL HOMERUNS FOR EF-2 AND MUA-1 MUST BE TO THIS CONTROL PANEL.
14 PROVIDE AND INSTALL J-BOX AT 44" A.F.F. WITH CIRCUIT AS SHOWN FOR POWER TO FIRE SUPPRESSION SYSTEM. COORDINATE WITH MECHANICAL PLANS FOR EXACT LOCATION AND REQUIREMENTS BEFORE DOING ANY WORK.
15 PROVIDE AND INSTALL GFI RECEPTACLE FOR WATER HEATER CONTROLS. MAKE CONNECTIONS TO WATER HEATER AS NECESSARY. PROVIDE CORD AND PLUG IF NECESSARY. COORDINATE WITH MECHANICAL PLANS BEFORE DOING ANY WORK.
16 CIRCUIT BREAKER MUST BE SHUNT-TRIP. SHUNT-TRIP TO BE CONTROLLED BY FIRE ALARM SUPRESSION SYSTEM.
17 MAKE CONNECTIONS TO RECIRCULATION PUMP AS NECESSARY. PROVIDE TOGGLE SWITCH FOR DISCONNECTING MEANS. COORDINATE WITH PLUMBING PLANS FOR EXACT LOCATION AND REQUIREMENTS BEFORE DOING ANY WORK.
18 PROVIDE AND INSTALL 30A, 230V, 1PH, NEMA L6-30 TWIST-LOCK RECEPTACLE. CONTRACTOR MUST VERIFY EXACT LOCATION OF RECEPTACLE PRIOR TO ROUGH-IN WITH IT DEPARTMENT OF THE CITY OF EL PASO.
19 PROVIDE AND INSTALL 20A, 230V, 1PH, NEMA L6-20 TWIST-LOCK RECEPTACLE. CONTRACTOR MUST VERIFY EXACT LOCATION OF RECEPTACLE PRIOR TO ROUGH-IN WITH IT DEPARTMENT OF THE CITY OF EL PASO.
20 PROVIDE AND INSTALL J-BOX AT 48" A.F.F. FOR CONNECTION TO ELECTRIC HAND DRYER. COORDINATE WITH ARCHITECT FOR EXACT LOCATION BEFORE DOING ANY WORK.
21 PROVIDE AND INSTALL T-STAT AT 48" A.F.F. WITH 1/2" ENCLOSURE TO ROOF TOP UNIT. COORDINATE WITH MECHANICAL PLANS FOR EXACT LOCATION BEFORE DOING ANY WORK.
22 PROVIDE AND INSTALL TOGGLE SWITCH FOR DISCONNECTING MEANS TO AIR CURTAIN. MAKE CONNECTIONS TO AIR CURTAIN WITH WATER TIGHT FLEXIBLE CONDUIT AS NECESSARY. COORDINATE WITH MECHANICAL PLANS FOR EXACT LOCATION AND REQUIREMENTS BEFORE DOING ANY WORK.

REFERENCES — BENCHMARKS

DATE	REVISIONS	BY

ARCHITECTS SEAL

SCALE
HOR: SHOWN
VER: SHOWN

DATE 11/20/15
DESIGNED BY Designer
DRAWN BY Author
CHKD BY Principal
APPD BY Approver

PROJECT NAME
NORTHGATE TRANSFER CENTER
EL PASO, TEXAS.

CITY OF EL PASO
CAPITAL IMPROVEMENT DEPARTMENT

THE CITY OF EL PASO TEXAS

STATE OF TEXAS
FELIX R. PADILLA
56294
REGISTERED
PROFESSIONAL ENGINEER
2/4/16

ALPHA ENGINEERING, INC.
ENGINEERING CONSULTANTS
1818 E. RIO GRANDE • EL PASO, TEXAS 79902
TEL. (915) 838-9900 • FAX. (915) 838-9909
REGISTRATION # F005236

2-4-2016

SHEET TITLE
TRANSFER CENTER POWER PLAN

SHEET
E-200

1 TRANSFER CENTER SPECIAL SYSTEMS PLAN
1/8" = 1'-0"

KEYED NOTES E-300 (#)

1 PROPOSED LOCATION OF FIRE ALARM CONTROL PANEL.

2 PROVIDE AND INSTALL J-BOX FOR CCTV CAMERA. INSTALL 3/4" CONDUIT WITH PULLSTRING TO I.T. ROOM. VERIFY EXACT MOUNTING LOCATION, HEIGHT AND REQUIREMENTS WITH ARCHITECT AND OWNER BEFORE DOING ANY WORK.

3 MAKE CONNECTIONS TO SPRINKLER SERVICE TAMPER AND FLOW SWITCH. CONNECT TO FIRE ALARM CONTROL PANEL.

4 PROVIDE AND INSTALL DATA OUTLET AND TV CABLE OUTLET AT 96" A.F.F. FOR TELEVISION. VERIFY EXACT HEIGHT AND LOCATION WITH ARCHITECT BEFORE DOING ANY WORK.

5 PROVIDE AND INSTALL FLOOR BOX WITH TWO DUPLEX RECEPTACLES AND SEPRATE SIDE FOR COMMUNICATIONS. FLOOR BOX TO BE WIREMOLD EFB6S-OG OR EQUAL. COORDINATE WITH ARCHITECT FOR EXACT LOCATION BEFORE DOING ANY WORK.

6 RISE TO ABOVE CEILING WITH 1 1/2" CONDUIT WITH PILLSTRING.

7 PROVIDE AND INSTALL J-BOX ON WALL FOR INTRUSION SENSOR (BY OTHERS). INSTALL 3/4" CONDUIT WITH PULLSTRING TO ELEC. ROOM OR LOCATION OF INTRUSION ALARM (BY OTHERS). COORDINATE WITH OWNER FOR EXACT LOCATION AND HEIGHT BEFORE DOING ANY WORK.

8 PROVIDE AND INSTALL J-BOX AT 48" A.F.F. WITH 3/4" CONDUIT WITH PULLSTRING TO ACCESSIBLE CEILING FOR CARD READER. COORDINATE WITH ARCHITECT FOR EXACT LOCATION BEFORE DOING ANY WORK.

9 PROVIDE AND INSTALL J-BOX FOR PANIC ALARM (BY OTHERS). INSTALL 3/4" CONDUIT WITH PULLSTRING TO SECURITY OFFICE. COORDINATE WITH OWNER FOR EXACT LOCATION AND REQUIREMENTS BEFORE DOING ANY WORK.

10 PROVIDE AND INSTALL J-BOX ON CEILING FOR INTRUSION SENSOR (BY OTHERS). INSTALL 3/4" CONDUIT WITH PULLSTRING TO ELEC. ROOM OR LOCATION OF INTRUSION ALARM (BY OTHERS). COORDINATE WITH OWNER FOR EXACT LOCATION AND HEIGHT BEFORE DOING ANY WORK.

11 PROVIDE AND INSTALL J-BOX FOR TIME WARNER CONNECTION. COORDINATE WITH OWNER FOR EXACT LOCATION AND HEIGHT BEFORE DOING ANY WORK.

12 PROVIDE AND INSTALL 4" CONDUIT WITH PULLSTRING, BUSHINGS AND BELLCAPS UNDERGROUND FROM GROUND BOX TO I.T. ROOM IN TRANSFER CENTER FOR AT&T. VERIFY EXACT LOCATION AND REQUIREMENTS WITH OWNER AND AT&T BEFORE DOING ANY WORK.

13 PROVIDE AND INSTALL 4" CONDUIT WITH PULLSTRING, BUSHINGS AND BELLCAPS UNDERGROUND FROM I.T. ROOM IN TRANSFER CENTER TO I.T. ROOM IN GARAGE. COORDINATE WITH OWNER AND FOR EXACT LOCATION AND REQUIREMENTS BEFORE DOING ANY WORK.

14 PROVIDE AND INSTALL 4" CONDUIT WITH PULLSTRING, BUSHINGS AND BELLCAPS UNDERGROUND FROM I.T. ROOM IN TRANSFER CENTER TO TELEPHONE CABINET FOR TIME WARNER CABLE. COORDINATE WITH OWNER AND AT&T FOR EXACT LOCATION AND REQUIREMENTS BEFORE DOING ANY WORK.

15 PROVIDE AND INSTALL 2" CONDUIT WITH PULLSTRING, BUSHINGS AND BELLCAPS UNDERGROUND FROM I.T. ROOM IN TRANSFER CENTER TO CABLE/TV CABINET FOR TIME WARNER CABLE. COORDINATE WITH OWNER AND TIME WARNER FOR EXACT LOCATION AND REQUIREMENTS BEFORE DOING ANY WORK.

16 INSTALL GROUND BAR WITH 1/2" CONDUIT WITH 1-#6 CU. GND. CONDR. FROM THIS GROUND BAR BACK TO MAIN GROUND BAR IN PANEL 'M'. SEE DETAIL 4/E-500 ON SHEET E-500. COORDINATE WITH OWNER FOR EXACT LOCATION AND REQUIREMENTS BEFORE DOING ANY WORK.

17 PROVIDE AND INSTALL (2) 2" CONDUITS WITH PULLSTRING FROM I.T. ROOM TO ABOVE CEILING IN OPERATORS DAY ROOM FOR COMMUNICATIONS WIRING.

18 PROVIDE AND INSTALL (2) 2" CONDUITS WITH PULLSTRING FROM I.T. ROOM TO ABOVE CEILING IN PUBLIC MEETING ROOM FOR COMMUNICATIONS WIRING.

19 PROVIDE AND INSTALL 4" CONDUIT WITH PULLSTRING, BUSHINGS AND BELLCAPS UNDERGROUND FROM GROUND BOX TO I.T. ROOM IN TRANSFER CENTER FOR FIBER OPTIC. VERIFY EXACT LOCATION AND REQUIREMENTS WITH OWNER BEFORE DOING ANY WORK.

REFERENCES — BENCHMARKS

DATE	REVISIONS	BY

ARCHITECTS SEAL

SCALE
HOR: SHOWN
VER: SHOWN

DATE 11/20/15
DES.CH.BY Designer
DRAWN BY Author
CHKD BY Principal
APPD BY Approver

PROJECT NAME
NORTHGATE TRANSFER CENTER
EL PASO, TEXAS.

CITY OF EL PASO
CAPITAL IMPROVEMENT DEPARTMENT

THE CITY OF EL PASO TEXAS

FELIX A. PADILLA
56294
REGISTERED PROFESSIONAL ENGINEER
2/4/16

ALPHA ENGINEERING, INC.
ENGINEERING CONSULTANTS
1818 E. RIO GRANDE • EL PASO, TEXAS 79902
TEL. (915) 838-9900 • FAX. (915) 838-9909
REGISTRATION # F005236

2-4-2016

SHEET TITLE
TRANSFER CENTER SPECIAL SYSTEMS PLAN

SHEET
E-300

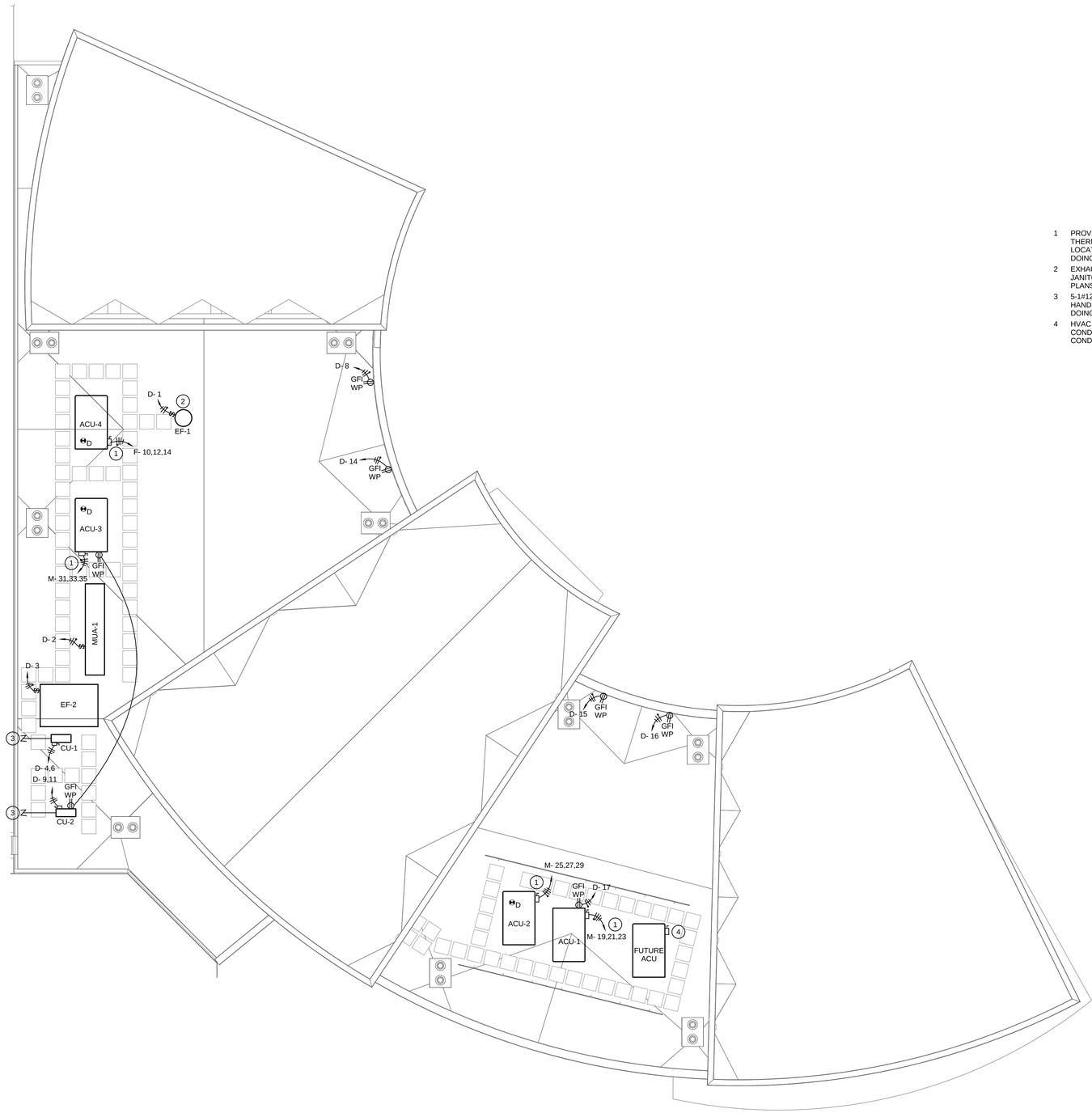

1 TRANSFER CENTER HVAC ROOF POWER PLAN
1/8" = 1'-0"

KEYED NOTES E-400

1 PROVIDE AND INSTALL 1/2" CONDUIT WITH PULLSTRING TO THERMOSTAT LOCATION. SEE TRANSFER POWER PLAN FOR LOCATION. COORDINATE WITH MECHANICAL PLANS BEFORE DOING ANY WORK.

2 EXHAUST FAN TO BE CONTROLLED THRU SWITCH IN JANITORS CLOSET 114. COORDINATE WITH MECHANICAL PLANS.

3 5-1#12 THHN CU CNDRS. FOR CONTROL WIRING TO AIR HANDLER. COORDINATE WITH MECHANICAL PLANS BEFORE DOING ANY WORK.

4 HVAC UNIT TO BE INSTALLED AT FUTURE DATE. STUBB 1" CONDUIT WITH PULLSTRING TO PANEL 'M'. STUBB (2)1/2" CONDUITS WITH PULLSTRING TO BELOW ROOF.

FELIX A. PADILLA
56294
REGISTERED
PROFESSIONAL ENGINEER
STATE OF TEXAS
2/4/16

ALPHA ENGINEERING, INC.
ENGINEERING CONSULTANTS
1818 E. RIO GRANDE • EL PASO, TEXAS 79902
TEL. (915) 838-9900 • FAX. (915) 838-9909
REGISTRATION # F005236

2-4-2016

REFERENCES — BENCHMARKS

DATE	REVISIONS	BY

ARCHITECTS SEAL

SCALE
HOR: SHOWN
VER: SHOWN

DATE 11/20/15
DES.CKD.BY Designer
DRAWN BY Author
CHKD BY Principal
APPD BY Approver

PROJECT NAME

NORTHGATE TRANSFER CENTER

EL PASO, TEXAS.

CITY OF EL PASO
CAPITAL IMPROVEMENT DEPARTMENT

THE CITY OF EL PASO TEXAS

SHEET TITLE

TRANSFER CENTER HVAC ROOF POWER PLAN

SHEET
E-400

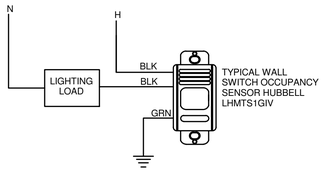

* UNIT POWERS OFF BLK HOT (LINE) CONNECTION SET TO TURN OFF AT 15 MINUTES AFTER NO MOTION IS DETECTED

SINGLE SWITCH WALL MOUNTED SENSOR WIRING DIAGRAM

1 / E-500 — NOT TO SCALE

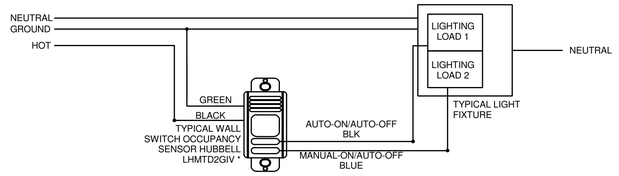

* UNIT POWERS OFF BLK HOT (LINE) CONNECTION. SET TO TURN OFF AT 15 MINUTES AFTER NO MOTION IS DETECTED.

SENSOR WIRING DIAGRAM DUAL SWITCH WALL MOUNTED

2 / E-500 — NOT TO SCALE

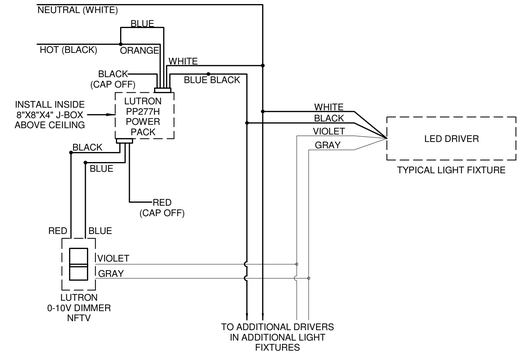

LUTRON DIMMER WIRING DIAGRAM

3 / E-500 — NOT TO SCALE

* NOTES: DIMMER SWITCH TO BE LUTRON NOVA NFTV-IV WITH LUTRON PP-277H POWER PACK. DIMMER SWITCH MUST BE LIGHT FIXTURE COMPATIBLE. COORDINATE WITH LIGHT FIXTURE MANUFACTURER FOR COMPATIBLE DIMMERS. INSTALL PP-277H POWER PACK ABOVE CEILING AND MAKE ALL NECESSARY CONNECTIONS TO LIGHT FIXTURE LED DRIVERS. EACH DIMMER MUST BE INSTALLED IN INDIVIDUAL BOXES. DIMMERS MUST NOT BE GANGED.

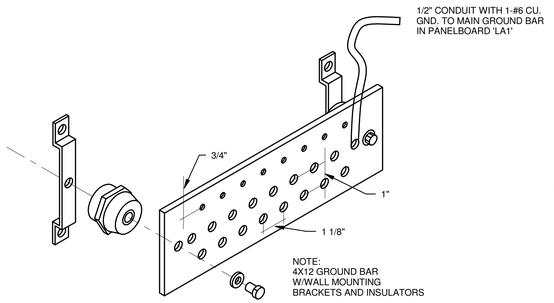

GROUND BAR DETAIL

4 / E-500 — NTS

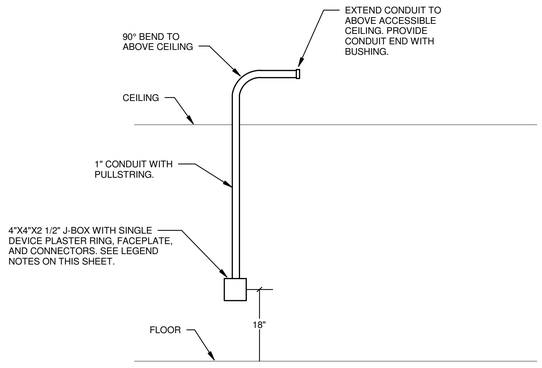

TYP. DATA DROP

5 / E-500 — NTS

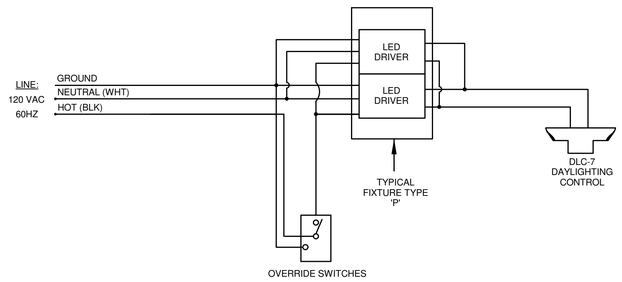

DAYLIGHTING CONTROL DIAGRAM

6 / E-500 — NTS

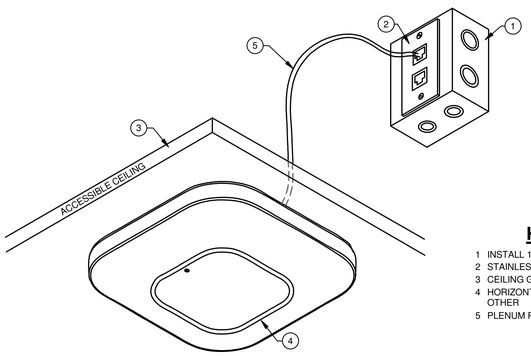

KEYED NOTES E-500 (#)

1 INSTALL 1 1/4 " CONDUIT FROM BOX TO CABLE TRAY
2 STAINLESS STEEL FACEPLATE BY OTHERS
3 CEILING GRID/LAY IN CEILING.
4 HORIZONTAL SURFACE MOUNTED WIRELESS ROUTER BY OTHER
5 PLENUM RATED PATCH CORD BY OTHERS

OMNI DIRECTIONAL WIRELESS ANTENNA DETAIL

7 / E-500 — NTS

ALPHA ENGINEERING, INC.
ENGINEERING CONSULTANTS
1818 E. RIO GRANDE • EL PASO, TEXAS 79902
TEL. (915) 838-9900 • FAX. (915) 838-9909
REGISTRATION # F005236

2-4-2016

REFERENCES — BENCHMARKS

BY	REVISIONS	DATE

ARCHITECTS SEAL

SCALE
HOR: SHOWN
VER: SHOWN

DATE 11/2015
DES.CHKBY Enrique
DRAWN BY Adrian
CHKD BY Rolando
APPD BY Approver

PROJECT NAME
NORTHGATE TRANSFER CENTER
EL PASO, TEXAS.

CITY OF EL PASO
CAPITAL IMPROVEMENT DEPARTMENT

SHEET TITLE
TRANSFER CENTER DETAILS

SHEET
E-500

ELECTRICAL SYMBOL LEGEND

SYMBOL	DESCRIPTION
"A"	FLUORESCENT FIXTURE, LETTER DENOTES TYPE
"A" "a"	FLUORESCENT FIXTURE, UPPERCASE LETTER DENOTES FIXTURE TYPE, LOWERCASE LETTER DENOTES WHICH SWITCH IS CONTROLLING FIXTURE.
"G"	WALL MOUNTED FIXTURE, LETTER DENOTES TYPE
"G"	CEILING MOUNTED FIXTURE, LETTER DENOTES TYPE
"X1"	EXIT LIGHT FIXTURE, CONNECT TO UNSWITCHED HOT CONDUCTOR.
"G"	RECESSED FIXTURE, LETTER DENOTES TYPE
"EM"	EMERGENCY LIGHTS FIXTURE, CONNECT TO UNSWITCHED HOT CONDUCTOR.
"EMX"	COMBINATION EXIT/EMERGENCY LIGHT FIXTURE, CONNECT TO UNSWITCHED HOT CONDUCTOR.
EF	EXHAUST FAN, SEE MECHANICAL PLANS
	LIGHT POLE FIXTURE, LETTER DENOTES TYPE
2	KEYED NOTE SYMBOL-ELECTRICAL
LV	LOW VOLTAGE WIRING CIRCUIT
WP	WEATHERPROOF
AFF	ABOVE FINISHED FLOOR
	BRANCH CIRCUIT IN WALLS OR CEILING.
	BRANCH CIRCUIT UNDER FLOOR.
$	SINGLE POLE WALL SWITCH, 48" TO CENTER. UNLESS OTHERWISE NOTED.
$3	THREE-WAY WALL SWITCH, 48" TO CENTER UNLESS OTHERWISE NOTED.
$4	FOUR-WAY WALL SWITCH, 48" TO CENTER. UNLESS OTHERWISE NOTED.
$D	DIMMER SWITCH, 48" TO CENTER, 1600 WATTS RATING, UNLESS OTHERWISE NOTED
	FLOOR OUTLET
	FLUSH FLOOR 2-GANG OUTLET BOX WITH RECEPTACLE FOR POWER AND COVER FOR DAT/TEL.
	FLUSH FLOOR TELEPHONE SYSTEM OUTLET.
	DATA/TEL. SYSTEM OUTLET AT 18" AFF TO CENTER UNLESS OTHERWISE NOTED., STUBB-UP TO ABOVE SUSPENDED CEILING WITH 1" COND. WITH BUSHING AND PULLSTRING.
TV	TV CABLE OUTLET, CONTRACTOR TO PRE-WIRE, INSTALL AND MAKE RECEPTACLE CONNECTIONS, 72" AFF TO CENTER
J	JUNCTION BOX
J	JUNCTION BOX INSTALLED ABOVE THE CEILING WITH FLEXIBLE CONDUIT CONNECTION TO LAY-IN FIXTURES. MAXIMUM 6'-0" LENGTH OF CONDUIT WITH REQUIRED CONDUCTORS ALONG WITH GREEN WIRE GROUND.
	DUPLEX OUTLET, 18" A.F.F. TO CENTER OF BOX, UNLESS OTHERWISE NOTED
GFI	GROUND FAULT CIRCUIT INTERRUPTING DUPLEX RECEPTACLE, 18" A.F.F., TO CENTER, UNLESS OTHERWISE NOTED
	GROUND FAULT CIRCUIT INTERRUPTING DUPLEX RECEPTACLE MOUNTED AT 44" AFF. TO CENTER, UNLESS OTHERWISE NOTED.
EWC	GFI DUPLEX RECEPTACLE OUTLET FOR ELECTRICAL WATER COOLER
	QUADRUPLEX RECEPTACLE, 125VAC-20A, NEMA 5-20R, 18" A.F.F., TO CENTER UNLESS OTHERWISE NOTED
	TELEPHONE BOARD, 5/8" PLYWOOD PAINTED WITH FIRE RESISTANT PAINT, SEE POWER PLAN
T	THERMOSTAT AT 48" A.F.F TO CENTER, PROVIDED BY MECHANICAL CONTRACTOR.
	DOOR OPENER PUSHBUTTON
	NEW PANEL BOARD. SEE PANEL SCHEDULE FOR CHARACTERISTICS.
	EXISTING PANEL BOARD TO REMAIN. NO WORK REQUIRED UNLESS NOTED.
	DISCONNECT, TO BE NEMA 3R IF INSTALLED OUTDOORS.
	MOTOR CONTROLLER, SIZE AND POLES FOR MOTOR FURNISHED.
T	TRANSFORMER AS NOTED
	METER POLE, SEE RISE DIAGRAM

FIXTURE SCHEDULE NOTES:

(1) COORDINATE WITH ARCHITECT FOR EXACT MOUNTING HEIGHT BEFORE DOING ANY WORK.
(2) THIS FIXTURE TO BE WIRED UNSWITCHED AS NIGHT LIGHT.
(3) FIXTURE TO BE PROVIDED WITH INTEGRAL OCCUPANCY MOTION SENSOR. INSTALL PER MANUFACTURER'S INSTALLATION INSTRUCTIONS. CONTRACTOR MUST SET SENSOR TO HAVE THE FOLLOWING SETTINGS.
a) SET THE HIGH MODE TO 10V FOR MAXIMUM LIGHT OUTPUT WHEN MOTION IS DETECTED.
b) SE THE LOW MODE TO 2V FOR LOWERED LIGHT OUTPUT WHEN NO MOTION IS BEING DETECTED.
c) SET THE TIME DELAY TO 10 MINUTES.
d) THE CUT OFF DELAY FEATURE SHALL BE DISABLED.
e) THE SENSATIVITY SETTING SHALL BE SET ON MAXIMUM.
f) THE SET POINT FEATURE SHALL BE ENABLED AND SET TO 5FC
ALL THESE SETTINGS MUST BE FIELD ADJUSTED AS NECESSARY TO ACCOMODATE EACH APPLICATION. CPPRDINATE WITH ENGINEER.

(4) FIXTURE TO BE MOUNTED ON CANOPY. SEE PLAZA LIGHTING PLAN.
(COORDINATE WITH ARCHITECT FOR EXACT MOUNTING LOCATION)
(5) FIXTURE TO BE MOUNTED ABOVE KITCHEN AND TICKET OFFICE CEILING.
(COORDINATE WITH ARCHITECT FOR EXACT LOCATION)
(6) CONTRACTOR TO PROVIDE ENOUGH FIXTURE ROLL TO PROVIDE LAYOUT AS SHOWN.
(COORDINATE WITH ARCHITECT FOR EXACT MOUNTING LOCATIONS)
(7) FIXTURE SHALL BE AIMED TO LIGHT FLAG ON FLAGPOLE. COORDINATE WITH ARCHITECT FOR EXACT FLAGPOLEOCATION AND HEIGHT.

FIXTURE SCHEDULE

TYPE	DESCRIPTION & MFR. CAT. No.	LAMPS & WATTS	MOUNTING	NOTES
A	CREE IG-NM-SS-J-40K-UL-WHPML/IG-JB-WH	66W LED	SURFACE	(6)
B	AXIS WETBEAM4 WBSLED B3 MF 750 80 40 S 8 FBA UNV D 1 SC	67W LED	SURFACE	
C	CREE CR24 50L-40K-S	50W LED	RECESSED	
D	CREE CR24 40LHE-40K-S	33W LED	RECESSED	
D1	CREE CR24 40LHE-40K-S/DGA24-WHT	33W LED	RECESSED	
F	VERBATIM PN22-W45-C40-010/FK24	45W LED	RECESSED	
F1	VERBATIM PN22-W45-C40-010	45W LED	RECESSED	
G	AAL KICK LARGE K54-T4-MO-18040 PS516-188-FBA GFI	4-193W LED	18FT. POLE	
G1	AAL KICK LARGE K51-T4-MO-18040 PS516-188-FBA GFI	193W LED	18FT. POLE	
HE	FINELITE HP-4R 16FT HO 4000K 120V SC SF EM	147W LED	RECESSED	
J	COLUMBIA LAW 4 40 ML E U	48W LED	SURFACE	
J1	COLUMBIA LCL8-40ML-EU	96W LED	SURFACE	
J2	COLUMBIA LAW 4 40 ML E U	48W LED	WALL @8'-0" A.F.F.	
J3	COLUMBIA LAW 4 40 ML E U	48W LED	PENDANT @9'-0" A.F.F.	
KE	FINELITE HP-4R 20FT HO 4000K 120V SC SF EM	184W LED	RECESSED	
LE	FINELITE HP-4R 12FT HO 4000K 120V SC SF EM	110W LED	RECESSED	
M	FINELITE HP-4R 8FT HO 4000K 120V SC SF	74W LED	RECESSED	
ME	FINELITE HP-4R 8FT HO 4000K 120V SC SF EM	74W LED	RECESSED	
NE	FOCAL POINT FSM4LS FL 625 40K 1C UNV LD1 EM C96 FBA 17 FT	116W LED	PENDANT @12'-0" A.F.F.	(1)
P	LUMIUM 03.3 CS LED 8' 40K CU:(D/H)(I/L)CR U 10D SC MF 55 SW W CL16' CF LENS	186W LED	PENDANT @18'-0" A.F.F.	(1)
PE	LUMIUM 03.3 CS LED 4' 40K CU:(D/H)(I/L)CR U 10D SC MF 55 SW W CL16' EMB12	93W LED	PENDANT @18'-0" A.F.F.	(1)
PENL	LUMIUM 03.3 CS LED 4' 40K CU:(D/H)(I/L)CR U 10D SC MF 55 SW W CL16' EMB12	93W LED	PENDANT @18'-0" A.F.F.	(1) (2)
P1ENL	LUMIUM 03.3 CS LED 8' 40K CU:(D/H)(I/L)CR U 10D SC MF 55 SW W CL16' EMB12	186W LED	PENDANT @18'-0" A.F.F.	(1) (2)
P2	LUMIUM 03.3 CS LED 4' 40K CU:(D/H)(I/L)CR U 10D SC MF 55 SW W CL16'	93W LED	PENDANT @14'-0" A.F.F.	(1)
P2E	LUMIUM 03.3 CS LED 4' 40K CU:(D/H)(I/L)CR U 10D SC MF 55 SW W CL16' EMB12	93W LED	PENDANT @14'-0" A.F.F.	(1)
P3E	LUMIUM 03.3 CS LED 12' 40K CU:(D/H)(I/L)CR U 10D SC MF 55 SW W CL16' EMB12	279W LED	PENDANT @14'-0" A.F.F.	(1)
Q	FINELITE HP-4 R 4FT HO 4000K 120 SC SF	37W LED	RECESSED	
QE	FINELITE HP-4 R 4FT HO 4000K 120 SC SF EM	37W LED	RECESSED	
QENL	FINELITE HP-4 R 4FT HO 4000K 120 SC SF EM	37W LED	RECESSED	(2)
RE	FOCAL POINT FSM4LS FL 625 40K 1C UNV LD1 C96 FBA 21FT	160W LED	PENDANT @12'-0" A.F.F.	(1)
SE	FOCAL POINT FSM4LS FL 625 40K 1C UNV LD1 EM C96 FBA 23FT	174W LED	PENDANT @12'-0" A.F.F.	(1)
T	CREE CR22 20L-40K-S	22W LED	RECESSED	
TE	CREE CR22 20L-40K-S EB14	22W LED	RECESSED	
V	PRESCOLITE LC6LED 120 6LCLED 5 40K 8 WH WT B6	17W LED	RECESSED	
V1	PRESCOLITE LC6LED 120 6LCLED 7 40K 8 WH WT B6	26W LED	RECESSED	
W	KIM LIGHTING LTV82FF SP 18L 4K UV SR RCA82	23W LED	IN-GRADE	
XP3	SELUX OLML F80 U L23 40 FBA 120 DS	23W LED	ON CANOPY	(4)
XU1	KIM LIGHTING LTV83FF NF 18L 4K UV SR RCA83	14W LED	IN-GRADE	
XU2	KIM LIGHTING LTV82FF SP 18L 4K UV SR RCA82	23W LED	IN-GRADE	
Y	ECOSENSE SCIS-48-40-120-CL/ INT2P-A-LDR-120-10/SCI-A-MNT-ADJ	20W LED	WALL 12" ABOVE CEILING	(5)
Z	LOUIS POULSEN LPI-MIN-CH 45W LED/4000K 120-277 NAT PAINT ALU T5 MATTE BASIC N/A	45W LED	PENDANT FROM 1/2" AIRCRAFT CABLE	(1)
AA	AAL KICK LARGE K51-T4-MO-18040 PS516-188 GFI	193W LED	18FT. POLE	
AA1	AAL KICK LARGE K51-T4-MO-18040 PS516-188 GFI	193W LED	18FT. POLE	
AA2	AAL KICK LARGE K51-T4-MO-18040 PS516-188 GFI	2-193W LED	18FT. POLE	
BB	PRISMA MIMIK 20 FLAT B 071188	24W LED	WALL @9'-0" A.F.F.	
BB1	PRISMA MIMIK 20 FLAT B 071188	24W LED	WALL @12'-0" A.F.F.	
BB2	PRISMA MIMIK 30 TYPE IV 070021	30W LED	WALL @9'-0" A.F.F.	
BB3	PRISMA MIMIK 20 FLAT B 071188	24W LED	WALL @13'-0" A.F.F.	
CC	LUMENPULSE LOG ASHRAE-120-48-40K-10X10-UMP FBA NO	20W LED	SURFACE ON CANOPY	
DD	LUMENPULSE LBM-120-40K-NF-LSLH-G2-FBA-NO	28W LED	SURFACE	
FF	LUMENPULSE LBM-120-40K-FL-ESTIMATED-G2	28W LED	SURFACE	
GG	LUMENPULSE LOG RO-120-48-40K-30X60-SI-NO	34W LED	SURFACE	
HH	LUMENPULSE LBM-120-40K-NS-LSL-ESTIMATED	28W LED	SURFACE	
JJ	LUMENPULSE LBM-120-40K-NR-ESTIMATED-G2	28W LED	SURFACE	
KK	LUMIUM 03.3 CS LED 8' 40K H U ND SC MF 55 SW W CL16' CF LENS	186W LED	PENDANT @14'-0" A.F.F.	(1)
KKE	LUMIUM 03.3 CS LED 8' 40K H U ND SC MF 55 SW W CL16' EMB12 CF LENS	186W LED	PENDANT @14'-0" A.F.F.	(1)
KK2	LUMIUM 03.3 CS LED 4' 40K H U ND SC MF 55 SW W CL16' CF LENS	93W LED	PENDANT @14'-0" A.F.F.	(1)
KK2E	LUMIUM 03.3 CS LED 4' 40K H U ND SC MF 55 SW W CL16' EMB12 CF LENS	93W LED	PENDANT @14'-0" A.F.F.	(1)
LLE	SPECTRUM SGE6SQLEDGV55L40K E 1 BH27 CA0366GV-SG	43W LED	SURFACE	
LL1	SPECTRUM SGE6SQLEDGV15L40K E 1 BH27 CA0366GV-SG-SO	14W LED	SURFACE	
LL1E	SPECTRUM SGE6SQLEDGV15L40K E 1 EM BH27 EM CA0366GVSG	14W LED	SURFACE	
MM	LUMENPULSE LOG ASHRAE-120-48-40K-10X10-UMP FBA NO	20W LED	ON STRUCTURAL COLUMNS	
NN	CALI ML2000 24"O/C LED2.7K OUTDOOR	2.5W LED PER LAMP	AIRCRAFT CABLE	
PP	LUMIUM 03.3 CS LED 4' 40K CU:(D/H)(I/L)CR U ND SC MF 55 SW W CL16'	93W LED	PENDANT @13'-0" A.F.F.	(1)
RR	HUBBELL LNC2-12LU-4K-3-CBA-PC-BBU	29W LED	WALL @3'-0" ABOVE LEVEL 2 FINISH FLOOR	
SS	RFX-RGB-50-24-WET/ XFMR-24-150/RFX-DMX-CV-DECODER/ RFX-RGB-CSS-FLEX/RFX-BASE-AL/RFX-CAP	108W LED	SURFACE	
TT	WHITEWAY CLED LL 7 UNV S 4 CBA	66W LED	SURFACE	
VVENL	FOCAL POINT FSM4L FL 825 40K 1C UNV LD1 EM WH 8FT	86W LED	RECESSED	
WW	HUBBELL LXEM2-40LW-RFA-EU	29W LED	ELEVATOR PIT	
YY	MODA LIGHT ROKO 12G2 FBA NW 15	15W LED	IN-GRADE, FLAG POLE	(7)
ZZ	KIM LIGHTING EL700S3/12L4KUV	14W LED	FLOOR/TREE LIGHT	
UL1	CSLSS3002-CBA	3W LED	STEP LIGHT	
EM	DUAL LITE EV2	INCLUDED	WALL @ 8'-0" A.F.F.	
EM1	EXITRONIX TR WB BR	INCLUDED	CEILING/WALL	
X1	EXITRONIX 902-U-WB-RC-XX-BA	INCLUDED	CEILING/WALL	
X2	DUAL LITE LN4XGRWE	INCLUDED	WALL	

GENERAL NOTES:

A. ELECTRICAL INSTALLATION MUST FOLLOW ALL NATIONAL AND LOCAL ELECTRICAL CODES. INSTALLATION MUST CONFORM TO THE LOCAL POWER COMPANY'S SPECIFICATIONS.

B. ELECTRICAL CONTRACTOR MUST COORDINATE AND VERIFY WITH MECHANICAL AND PLUMBING CONTRACTOR THE LOCATION AND ELECTRICAL REQUIREMENTS TO ALL A/C EQUIPMENT, MOTORS, PUMPS, T-STATS., INTERLOCKING WIRING, ETC.

C. ALL MATERIALS SHALL BE IN ACCORDANCE WITH THE NATIONAL ELECTRICAL MANUFACTURERS ASSOCIATION AND SHALL BE LISTED BY THE U.L.

D. ELECTRICAL CONTRACTOR MUST COORDINATE ALL POWER SERVICE ON THIS PROJECT. THE CONTRACTOR IS RESPONSIBLE FOR ALL FEES FOR TEMPORARY SERVICE.

E. ELECTRICAL CONTRACTOR IS RESPONSIBLE FOR ALL PERMIT AND INSPECTION FEES REQUIRED BY THE GOVERNING BODIES.

F. ELECTRICAL CONTRACTOR MUST COMPLY WITH THE LATEST A.D.A. REQUIREMENTS.

G. MINIMUM SIZE CONDUCTORS SHALL BE #12 THW CU. UNLESS NOTED OR SIZED BY CODE.

H. ALL WIRING MUST BE IN CONDUIT, INCLUDING ALL L.V. WIRING. THIN WALL CONDUIT (EMT) CAN BE INSTALLED CONCEALED ABOVE CEILING, IN FURRED WALLS, AND WALLS EXCEPT WHERE THOSE WALLS ARE GROUTED SOLID. USE FLEX CONDUIT FOR MOTORS AND LIGHTING FIXTURES. USE WATER TIGHT FLEX CONDUIT FOR WATER HEATERS, DISPOSALS, EXTERIOR CONNECTIONS, ETC. BOND ACCORDING TO CODE.

I. VERIFY LOCATIONS OF ALL ELECTRICAL EQUIPMENT WITH OTHER TRADES TO AVOID CONFLICTS AND INTERFERENCES.

J. CONTRACTOR TO INSTALL 3'x4'x5/8" PLYWOOD TELEPHONE BOARD.

K. CONTRACTOR TO COORDINATE NEW SERVICE WITH OWNER AND LOCAL UTILITY AS SOON AS CONTRACT IS LET.

L. CONTRACTOR MUST VISIT SITE TO BECOME FAMILIAR WITH EXISTING CONDITIONS BEFORE BIDDING ON THIS PROJECT.

M. ALL ELECTRICAL EQUIPMENT IN FIRE RATED WALLS MUST BE INSTALLED SO THAT FIRE RATING IS NOT COMPROMISED.

F.A. LEGEND

15	STROBE, NUMBER DENOTES 'cd' RATING
15	HORN/STROBE, NUMBER DENOTES 'cd' RATING
	PULL STATION WITH STOPPER
S	SMOKE DETECTOR
H	HEAT DETECTOR
D	DUCT/SMOKE DETECTOR WITH REMOTE INDICATOR
FARA	FIRE ALARM REMOTE ANNUNCIATOR
FACP	FIRE ALARM CONTROL PANEL WITH DIGITAL NOTIFIER

F.A. NOTES

A. FIRE ALARM INSTALLER TO INSTALL SYSTEM TO MEET ALL NATIONAL AND LOCAL FIRE CODES. INSTALLER TO SUBMIT TO ARCHITECT "AS BUILT".

B. FIRE ALARM INSTALLER TO COORDINATE AND CONNECT SMOKE DETECTION SYSTEM TO A/C DUCT SYSTEM.

C. FIRE ALARM INSTALLER CAN SUBSTITUTE FIRE ALARM FIXTURES FOR OTHERS OF QUAL PERFORMANCE.

D. F.A. INSTALLER MUST BE CERTIFIED BY THE STATE AND SUBMIT ALL REQUIRED PLANS AND DRAWINGS, F.A. SYSTEM CALCULATIONS AND ALL APPLICABLE SUBMITTALS TO THE GOVERNING AUTHORITIES TO OBTAIN A PERMIT.

E. THE F.A. INSTALLER MUST BID ON A COMPLETE F.A. SYSTEM THAT COMFORMS TO ALL APPLICABLE CODES.

F. FIRE ALARM PANEL MUST HAVE PHONE DIALER AND BE CONNECTED TO PHONE SYSTEM.

G. F.A. INSTALLER MUST VISIT SITE TO BECOME FAMILIAR WITH EXISTING CONDITIONS BEFORE BIDDING ON THIS PROJECT.

H. CONTRACTOR MUST VISIT SITE BEFORE BIDDING ON THIS PROJECT AND ALLOWED FOR ANY MODIFICATIONS OR ADDITIONS NEEDED TO BE DONE ON THE EXISTING FIRE ALARM PANEL TO ACCOMMODATE ALL NEW DEVICES IN THE NEW ADDITION. CONTRACTOR TO DETERMINE IF NEW FIRE ALARM CONTROL PANEL IS NEEDED AND INSTALL A FIRE ALARM CONTROL PANEL IF NEEDED. CONTRACTOR MUST MAKE ALL FINAL CONNECTION AND TEST THE SYSTEM IN THE PRESENCE OF SCHOOL PERSONNEL OR ENGINEER.

COMcheck Software Version 4.0.2.0

Interior Lighting Compliance Certificate

Section 1: Project Information

Energy Code: 2009 IECC
Project Title:
Project Type: New Construction

Construction Site: Owner/Agent: Designer/Contractor:

Section 2: Interior Lighting and Power Calculation

A Area Category	B Floor Area (ft2)	C Allowed Watts / ft2	D Allowed Watts (B x C)
Transfer Center (Transportation)	9837	1	9837
Garage (Parking Garage)	27033	0.3	8110
Garage Common (Transportation)	8010	1	8010
Total Allowed Watts =			24757

Section 3: Interior Lighting Fixture Schedule

A Fixture ID : Description / Lamp / Wattage Per Lamp / Ballast	B Lamps / Fixture	C # of Fixtures	D Fixture Watts	E (C X D)
Transfer Center (Transportation 9837 sq.ft)				
LED 1: C: LED Panel 54W:	1	8	50	400
LED 2: D: LED Panel 40W:	1	2	40	80
LED 2 copy 1: D1: LED Panel 40W:	1	2	40	80
LED 4: F,F1: LED Panel 40W:	1	8	45	360
LED 5: HE: LED Linear 33W:	1	3	147	441
LED 6: J,J3: Other:	1	7	48	336
LED 5 copy 1: KE: LED Linear 33W:	1	2	184	368
LED 5 copy 2: LE: LED Linear 33W:	1	3	110	330
LED 5 copy 3: M,ME: LED Linear 33W	1	4	74	296
LED 10: NE: Other:	1	1	116	116
LED 11: P: Other:	1	6	186	1116
LED 11 copy 1: PE: Other:	1	2	93	186
LED 11 copy 2: P,2,P2E: Other:	1	7	93	651
LED 11 copy 3: P,3E: Other:	1	2	279	558
LED 11 copy 4: P,ENL: Other:	1	1	93	93
LED 11 copy 5: P,1ENL: Other:	1	2	186	372
LED 17: LL1,LL1E: Other:	1	5	14	70
LED 5 copy 4: D,QE,QENL: LED Linear 33W:	1	6	37	222
LED 10 copy 1: RE: Other:	1	1	160	160
LED 10 copy 2: SE: Other:	1	2	174	348
LED 21: T,TE: LED Panel 19W	1	4	22	88
LED 22: V: Other:	1	3	17	51
LED 23: V1: Other:	1	8	26	208
LED 24: VVENL: Other:	1	2	86	172
LED 25: Y: Other:	1	4	20	80
Garage (Parking Garage 27033 sq.ft)				
LED 26: A: Other:	1	26	66	1716
Garage Common (Transportation 8010 sq.ft)				
LED 27: 4: Other:	1	1	66	66
LED 28: J,J2,J2: Other:	1	14	48	672
LED 29: J1: Other:	1	3	95	285
LED 30: FF: Other:	1	2	28	56
LED 31: GG: Other:	1	4	34	136
LED 32: HH: Other:	1	1	28	28
LED 33: JJ: Other:	1	1	28	28
LED 34: PP: Other:	1	16	93	1488
Total Proposed Watts =				11660

Section 4: Requirements Checklist

Interior Lighting PASSES: Design 1.3% better than code.

Lighting Wattage:
☐ 1. Total proposed watts must be less than or equal to total allowed watts.

Allowed Watts	Proposed Watts	Complies
24757	11660	YES

Controls, Switching, and Wiring:
☐ 2. Daylight zones under skylights more than 15 feet from the perimeter have lighting controls separate from daylight zones adjacent to vertical fenestration.
☐ 3. Daylight zones have individual lighting controls independent from that of the general area lighting.

Exceptions:
Contiguous daylight zones spanning no more than two orientations are allowed to be controlled by a single controlling device.
Daylight spaces enclosed by walls or ceiling height partitions and containing two or fewer light fixtures are not required to have a separate switch for general area lighting.

☐ 4. Independent controls for each space (switch/occupancy sensor).

Exceptions:
Areas designated as security or emergency areas that must be continuously illuminated.
Lighting in stairways or corridors that are elements of the means of egress.

☐ 5. Master switch at entry to hotel/motel guest room.
☐ 6. Individual dwelling units separately metered.
☐ 7. Medical task lighting or art/history display lighting claimed to be exempt from compliance has a control device independent of the control of the nonexempt lighting.
☐ 8. Each space required to have a manual control also allows for reducing the connected lighting load by at least 50 percent by either controlling all luminaires, dual switching of alternate rows of luminaires, alternate luminaires, or alternate lamps, switching the middle lamp luminaires independently of other lamps, or switching each luminaire or each lamp.

Exceptions:
Only one luminaire in space.
An occupant-sensing device controls the area.
The area is a corridor, storeroom, restroom, public lobby or sleeping unit.
Areas that use less than 0.6 Watts/sq.ft.

☐ 9. Automatic lighting shutoff control in buildings larger than 5,000 sq.ft.:

Exceptions:
Sleeping units, patient care areas; and spaces where automatic shutoff would endanger safety or security.

☐ 10. Photocell/astronomical time switch on exterior lights.

Exceptions:
Lighting intended for 24 hour use.

☐ 11. Tandem wired one-lamp and three-lamp ballasted luminaires (No single-lamp ballasts).

Exceptions:
Electronic high-frequency ballasts. Luminaires on emergency circuits or with no available pair.

ALPHA ENGINEERING, INC.
ENGINEERING CONSULTANTS
1818 E. RIO GRANDE • EL PASO, TEXAS 79902
TEL. (915) 838-9900 • FAX. (915) 838-9909
REGISTRATION # F005236

2-4-2016

REFERENCES -- BENCHMARKS

DATE	REVISIONS	BY

ARCHITECTS SEAL

SCALE
HOR: SHOWN
VER: SHOWN

DATE 11/20/15
DESIGNED BY Designer
DRAWN BY Author
CHKD BY Checker
APPD BY Approver

PROJECT NAME
NORTHGATE TRANSFER CENTER
EL PASO, TEXAS.

CITY OF EL PASO
CAPITAL IMPROVEMENT DEPARTMENT

SHEET TITLE
ELECTRICAL SCHEDULES

SHEET
E-600

PANELBOARD: M

Location: ELECTRICAL 107
Supply From:
Mounting: Surface
Enclosure: Type 1

Volts: 120/208 Wye
Phases: 3
Wires: 4

A.I.C. Rating:
Mains Type: M.L.O
Mains Rating: 600 A

CKT	Circuit Description	Trip	Poles	A		B		C		Poles	Trip	Circuit Description	CKT
1	PANEL 'A'	100 A	3	9860 VA	6457 VA					3	100 A	PANEL 'B'	2
3	--	--	--			9876 VA	6549 VA			--	--	--	4
5	--	--	--					10516...	6268 VA	--	--	--	6
7	PANEL 'C'	100 A	3	10144...	4072 VA					3	200 A	PANEL 'D'	8
9	--	--	--			8536 VA	3888 VA			--	--	--	10
11	--	--	--					9288 VA	4180 VA	--	--	--	12
13	PANEL 'F'	100 A	3	8934 VA	0 VA					--	--	SPACE	14
15	--	--	--			7802 VA	0 VA			--	--	SPACE	16
17	--	--	--					7736 VA	0 VA	--	--	SPACE	18
19	ACU-1	45 A	3	3600 VA	0 VA					--	--	SPACE	20
21	--	--	--			3600 VA	0 VA			--	--	SPACE	22
23	--	--	--					3600 VA	0 VA	--	--	SPACE	24
25	ACU-2	45 A	3	3600 VA	0 VA					--	--	SPACE	26
27	--	--	--			3600 VA	0 VA			--	--	SPACE	28
29	--	--	--					3600 VA	0 VA	--	--	SPACE	30
31	ACU-3	45 A	3	3600 VA	0 VA					--	--	SPACE	32
33	--	--	--			3600 VA	0 VA			--	--	SPACE	34
35	--	--	--					3600 VA	0 VA	--	--	SPACE	36
37	FUTURE ACU	45 A	3	3600 VA	0 VA					--	--	SPACE	38
39	--	--	--			3600 VA	0 VA			--	--	SPACE	40
41	--	--	--					3600 VA	0 VA	--	--	SPACE	42
			Total Load:	53867 VA		51051 VA		52388 VA					
			Total Amps:	451 A		425 A		438 A					

Load Classification	Total Connected Load	Demand Factor	Estimated Load	Panel Totals	
HVAC	54580 VA	100.00%	54580 VA		
Receptacle	41028 VA	50.00%	20514 VA	**Total Calculated Load:**	158451 VA
Power	29265 VA	100.00%	29265 VA	**Total Estimated Load:**	146331 VA
Lighting	17996 VA	125.00%	22494 VA	**Total Calculated Load:**	440 A
HVAC (High)	15582 VA	125.00%	19478 VA	**Total Estimated Load:**	406 A

PANELBOARD: A

Location: ELECTRICAL 107
Supply From: M
Mounting: Surface
Enclosure: Type 1

Volts: 120/208 Wye
Phases: 3
Wires: 4

A.I.C. Rating: 10 KA
Mains Type: M.L.O
Mains Rating: 125 A

CKT	Circuit Description	Trip	Poles	A		B		C		Poles	Trip	Circuit Description	CKT
1	MEN #2 & WOMEN #2 RESTROOOM OUTLETS	20 A	1	540 VA	180 VA					1	20 A	BREAK ROOM OUTLETS	2
3	BREAK ROOM OUTLETS	20 A	1			180 VA	1260 VA			1	20 A	OPERATOR'S DAY ROOM OUTLETS	4
5	CHANGE MACHINE OUTLET	20 A	1					1000 VA	720 VA	1	20 A	GARBAGE DUMP & NURSING ROOM OUTLETS	6
7	VENDING MACHINE OUTLET	20 A	1	1000 VA	400 VA					1	20 A	EWC OUTLET	8
9	VENDING MACHINE OUTLET	20 A	1			1000 VA	900 VA			1	20 A	JANITOR & WOMEN #1 RESTROOM OUTLETS	10
11	TICKET VENDING MACHINE OUTLET	20 A	1					1000 VA	900 VA	1	20 A	PUBLIC MEETING ROOM OUTLETS	12
13	VENDING MACHINE OUTLET	20 A	1	1000 VA	180 VA					1	20 A	LOBBY OUTLET	14
15	ATM OUTLET	20 A	1			1000 VA	720 VA			1	20 A	SECURITY OFFICE OUTLETS	16
17	VENDING MACHINE OUTLET	20 A	1					1000 VA	1000 VA	1	20 A	AUTOMATIC FRONT DOORS	18
19	TICKET COUNTER/OFFICE OUTLETS	20 A	1	1260 VA	1080 VA					1	20 A	SECURITY OFFICE OUTLETS	20
21	LOBBY OUTLET	20 A	1			180 VA	1000 VA			1	20 A	AUTOMATIC FRONT DOORS	22
23	LOBBY OUTLET	20 A	1					180 VA	1440 VA	1	20 A	LOBBY OUTLETS	24
25	PUBLIC MEETING ROOM OUTLETS	20 A	1	900 VA	720 VA					1	20 A	LOBBY OUTLETS	26
27	LOBBY OUTLETS	20 A	1			1260 VA	0 VA			--	--	SPACE	28
29	LOBBY COUNTER TOP OUTLETS	20 A	1					900 VA	1200 VA	1	20 A	PATIO BIG ASS FANS	30
31	RESTROOM SIGN	20 A	1	200 VA	900 VA					1	20 A	PUBLIC MEETING ROOM OUTLETS	32
33	RESTROOM DOOR 120V, 1/2HP	20 A	1			1176 VA	1200 VA			1	20 A	PATIO BIG ASS FANS	34
35	RESTROOM DOOR 120V, 1/2HP	20 A	1					1176 VA	0 VA	--	--	SPACE	36
37	MICROWAVE CONNECTION	20 A	1	1500 VA	0 VA					--	--	SPACE	38
39	SPACE	--	--			0 VA	0 VA			--	--	SPACE	40
41	SPACE	--	--					0 VA	0 VA	--	--	SPACE	42
			Total Load:	9860 VA		9876 VA		10516 VA					
			Total Amps:	82 A		82 A		88 A					

Load Classification	Total Connected Load	Demand Factor	Estimated Demand	Panel Totals	
Receptacle	21440 VA	50.00%	10720 VA		
Power	8812 VA	100.00%	8812 VA	**Total Estimated Load:**	30252 VA
				Total Calculated Load:	19532 VA
				Total Estimated Load:	84 A
				Total Calculated Load:	54 A

PANELBOARD: B

Location: ELECTRICAL 107
Supply From: M
Mounting: Surface
Enclosure: Type 1

Volts: 120/208 Wye
Phases: 3
Wires: 4

A.I.C. Rating: 10 KA
Mains Type: M.L.O
Mains Rating: 100 A

CKT	Circuit Description	Trip	Poles	A		B		C		Poles	Trip	Circuit Description	CKT
1	PLAZA STEP LIGHTS	20 A	1	27 VA	134 VA					1	20 A	PLAZA IN-GROUND LIGHTS	2
3	IN-GRADE TRANSFER LIGHTS	20 A	1			92 VA	245 VA			1	20 A	SUSPENDED AIRCRAFT CABLE PLAZA LIGHTS	4
5	COVERED PATIO OUTLET	20 A	1					180 VA	772 VA	1	20 A	PLAZA POLE LIGHT	6
7	OUTSIDE TRANSFER WALL LIGHTS	20 A	1	294 VA	1158 VA					1	20 A	MAIN STREET LIGHTS	8
9	DRIVE WAY LIGHTS (1)	20 A	1			965 VA	1500 VA			1	20 A	ENTRANCE SIGN OUTLETS	10
11	CANOPY LIGHTS	20 A	1					1079 VA	540 VA	1	20 A	SUSPENDED AIRCRAFT CABLE PLAZA LIGHTS	12
13	FLAG POLE LIGHTS	20 A	1	90 VA	579 VA					1	20 A	DRIVE WAY LIGHTS (2)	14
15	COVERED PATIO OUTLET	20 A	1			180 VA	500 VA			1	20 A	EXISTING BACKFLOW PREVENTER HEATER	16
17	DRIVE WAY ENTRANCE SIGN	20 A	1					600 VA	386 VA	1	20 A	DRIVE WAY LIGHTS (1)	18
19	COVERED PATIO LIGHTS	20 A	1	1253 VA	180 VA					1	20 A	COVERED PATIO OUTLET	20
21	BOX/HUB	20 A	1			360 VA	180 VA			1	20 A	BENCH PLAZA OUTLET	22
23	PATIO OUTLET	20 A	1					180 VA	180 VA	1	20 A	BENCH PLAZA OUTLET	24
25	BENCH PLAZA OUTLET	20 A	1	180 VA	1000 VA					1	20 A	BACKFLOW PREVENTER HEATER	26
27	BENCH PLAZA OUTLET	20 A	1			180 VA	1000 VA			1	20 A	BACKFLOW PREVENTER	28
29	BENCH PLAZA OUTLET	20 A	1					180 VA	900 VA	1	20 A	BUS STOP SIGN ON POLE	30
31	BENCH PLAZA OUTLET	20 A	1	180 VA	900 VA					1	20 A	SITE POLE OUTLETS	32
33	DRIVE WAY LIGHTS (2)	20 A	1			965 VA	569 VA			1	20 A	STREET CANOPIES AND TREE LIGHTS	34
35	MAIN ST. TREE LIGHTS	20 A	1					169 VA	1158 VA	1	20 A	DRIVE WAY LIGHTS (1)	36
37	SPACE	--	--	0 VA	180 VA					1	20 A	BENCH PLAZA OUTLET	38
39	SPACE	--	--			0 VA	0 VA			--	--	SPACE	40
41	SPACE	--	--					0 VA	0 VA	--	--	SPACE	42
			Total Load:	6636 VA		6736 VA		6323 VA					
			Total Amps:	56 A		57 A		53 A					

Load Classification	Total Connected Load	Demand Factor	Estimated Load	Panel Totals	
Receptacle	3060 VA	50.00%	1530 VA		
Power	6405 VA	100.00%	6405 VA	**Total Calculated Load:**	20252 VA
Lighting	10787 VA	125.00%	13484 VA	**Total Estimated Load:**	21419 VA
				Total Calculated Load:	56 A
				Total Estimated Load:	59 A

Notes:
(1) THIS CIRCUIT TO BE WIRED THRU CONTACTOR #1.
(2) THIS CIRCUIT TO BE WIRED THRU CONTACTOR #2.

PANELBOARD: C

Location: ELECTRICAL 107
Supply From: M
Mounting: Surface
Enclosure: Type 1

Volts: 120/208 Wye
Phases: 3
Wires: 4

A.I.C. Rating: 10 KA
Mains Type: M.L.O
Mains Rating: 125 A

CKT	Circuit Description	Trip	Poles	A		B		C		Poles	Trip	Circuit Description	CKT
1	KH-1	20 A	1	500 VA	360 VA					1	20 A	SOFT DRINK DISPENCER OUTLET	2
3	MEN RESTOOM HAND DRYER	30 A	1			1500 VA	720 VA			1	20 A	WARMING KITCHEN OUTLET	4
5	WOMEN #1 RESTROOM HAND DRYER	30 A	1					1500 VA	800 VA	1	20 A	WARMING KITCHEN OUTLET	6
7	NURSING ROOM HAND DRYER	30 A	1	1500 VA	996 VA					1	20 A	FOOD PREP TABLE OUTLET	8
9	MEN #2 RESTROOM HAND DRYER	30 A	1			1500 VA	876 VA			1	20 A	FOOD PREP TABLE OUTLET	10
11	WOMEN RESTROOM HAND DRYER	30 A	1					1500 VA	876 VA	1	20 A	REFRIGERATOR UNIT OUTLET	12
13	WOMEN #2 RESTROOM HAND DRYER	30 A	1	1500 VA	876 VA					1	20 A	WORK TABLE OUTLET	14
15	MEN #1 RESTROOM HAND DRYER	30 A	1			1500 VA	180 VA			1	20 A	WARMING KITCHEN OUTLET	16
17	FAMILY ROOM HAND DRYER	30 A	1					1500 VA	1212 VA	1	20 A	FREEZER UNIT OUTLET	18
19	FIRE ALARM CONTROL PANEL	20 A	1	200 VA	1632 VA					1	20 A	ICE MACHINE OUTLET	20
21	INTRUSION ALARM PANEL	20 A	1			200 VA	360 VA			1	20 A	RESTOOM OUTLETS	22
23	FIRE SUPPRESSION SYSTEM	20 A	1					0 VA	0 VA	1	20 A	HOOD CONTROLS	24
25	I.T. OUTLET	20 A	2	500 VA	360 VA					1	20 A	KITCHEN OUTLETS	26
27	--	--	--			500 VA	0 VA			--	--	SHUNT-TRIP	28
29	I.T. OUTLET	30 A	2					500 VA	540 VA	1	20 A	IT/SHARED ROOM OUTLET	30
31	--	--	--	500 VA	360 VA					1	20 A	IT/SHARED ROOM OUTLET	32
33	I.T. OUTLET	20 A	2			500 VA	200 VA			1	20 A	ACCESS CONTROL PANEL	34
35	--	--	--					500 VA	360 VA	1	20 A	IT/SHARED ROOM OUTLET	36
37	I.T. OUTLET	30 A	2	500 VA	360 VA					1	20 A	IT/SHARED ROOM OUTLET	38
39	--	--	--			500 VA	0 VA			--	--	SPACE	40
41	SPACE	--	--					0 VA	0 VA	--	--	SPACE	42
			Total Load:	10144 VA		8536 VA		9288 VA					
			Total Amps:	85 A		71 A		78 A					

Load Classification	Total Connected Load	Demand Factor	Estimated Load	Panel Totals	
HVAC	500 VA	100.00%	500 VA		
Receptacle	15268 VA	50.00%	7634 VA	**Total Calculated Load:**	27968 VA
Power	12200 VA	100.00%	12200 VA	**Total Estimated Load:**	20334 VA
				Total Calculated Load:	78 A
				Total Estimated Load:	56 A

ALPHA ENGINEERING, INC.
ENGINEERING CONSULTANTS
1818 E. RIO GRANDE • EL PASO, TEXAS 79902
TEL. (915) 838-9900 • FAX. (915) 838-9909
REGISTRATION # F005236

2-4-2016

REFERENCES — BENCHMARKS

DATE	REVISIONS	BY

ARCHITECT'S SEAL

SCALE
HOR: SHOWN
VER: SHOWN

DATE 11/20/15
DESIGNED BY Designer
DRAWN BY Author
CHKD BY Approver
APPD BY Approver

PROJECT NAME
NORTHGATE TRANSFER CENTER
EL PASO, TEXAS.

CITY OF EL PASO
CAPITAL IMPROVEMENT DEPARTMENT

SHEET TITLE
PANEL SCHEDULES

SHEET
E-601

PANELBOARD: D

Location: ELECTRICAL 107
Supply From: M
Mounting: Surface
Enclosure: Type 1

Volts: 120/208 Wye
Phases: 3
Wires: 4

A.I.C. Rating: 10 KA
Mains Type: M.L.O
Mains Rating: 125 A

CKT	Circuit Description	Trip	Poles	A		B		C		Poles	Trip	Circuit Description	CKT
1	EF-1	20 A	1	696 VA	1656 VA					1	20 A	MUA-1	2
3	EF-2	20 A	1			528 VA	1000 VA			2	20 A	CU-1	4
5	AHIU-1	20 A	2					1000 VA	1000 VA	--	--	--	6
7	--	--	--	1000 VA	180 VA					1	20 A	ROOF OUTLET	8
9	CU-2	20 A	2			1000 VA	1000 VA			2	20 A	AHIU-2	10
11	--	--	--					1000 VA	1000 VA	--	--	--	12
13	ROOF OUTLETS	20 A	1	360 VA	180 VA					1	20 A	ROOF OUTLET	14
15	ROOF OUTLET	20 A	1			180 VA	180 VA			1	20 A	ROOF OUTLET	16
17	ROOF OUTLETS	20 A	1					180 VA	0 VA	--	--	SPACE	18
19	SPACE	--	--	0 VA	0 VA					--	--	SPACE	20
21	SPACE	--	--			0 VA	0 VA			--	--	SPACE	22
23	SPACE	--	--					0 VA	0 VA	--	--	SPACE	24
25	SPACE	--	--	0 VA	0 VA					--	--	SPACE	26
27	SPACE	--	--			0 VA	0 VA			--	--	SPACE	28
29	SPACE	--	--					0 VA	0 VA	--	--	SPACE	30
31	SPACE	--	--	0 VA	0 VA					--	--	SPACE	32
33	SPACE	--	--			0 VA	0 VA			--	--	SPACE	34
35	SPACE	--	--					0 VA	0 VA	--	--	SPACE	36
37	SPACE	--	--	0 VA	0 VA					--	--	SPACE	38
39	SPACE	--	--			0 VA	0 VA			--	--	SPACE	40
41	SPACE	--	--					0 VA	0 VA	--	--	SPACE	42
			Total Load:	4072 VA		3888 VA		4180 VA					
			Total Amps:	34 A		32 A		35 A					

Load Classification	Total Connected Load	Demand Factor	Estimated Load	Panel Totals	
HVAC	10880 VA	100.00%	10880 VA		
Receptacle	1260 VA	50.00%	630 VA	**Total Calculated Load:**	12140 VA
				Total Estimated Load	11510 VA
				Total Calculated Load:	34 A
				Total Estimated Load	32 A

PANELBOARD: E

Location:
Supply From: G1
Mounting: Surface
Enclosure:

Volts: 120/240 Single
Phases: 1
Wires: 3

A.I.C. Rating: 10 KA
Mains Type: M.L.O
Mains Rating: 100 A

CKT	Circuit Description	Trip	Poles	A		B		Poles	Trip	Circuit Description	CKT
1	PIT LIGHT	20 A	1	29 VA	48 VA			1	20 A	MECH. RM. LIGHT	2
3	PIT SUMP PUMP	20 A	1			1500 VA	0 VA	--	--	SPACE	4
5	PIT GFI OUTLET	20 A	1	180 VA	180 VA			1	20 A	SERV. ROOM OUTLET	6
7	SPACE	--	--			0 VA	0 VA	--	--	SPACE	8
9	CAB/LIGHTS ALARM	20 A	1	500 VA	0 VA			--	--	SPACE	10
11	SPACE	--	--			0 VA	0 VA	--	--	SPACE	12
13	SPACE	--	--	0 VA	0 VA			--	--	SPACE	14
15	SPACE	--	--			0 VA	0 VA	--	--	SPACE	16
			Total Load:	937 VA		1500 VA					
			Total Amps:	8 A		13 A					

Load Classification	Total Connected Load	Demand Factor	Estimated Load	Panel Totals	
Receptacle	1860 VA	50.00%	930 VA		
Power	548 VA	100.00%	548 VA	**Total Calculated Load:**	2437 VA
Lighting	29 VA	125.00%	36 VA	**Total Estimated Load:**	1514 VA
				Total Calculated Load:	10 A
				Total Estimated Load:	6 A

PANELBOARD: F

Location: ELECTRICAL 107
Supply From: M
Mounting: Surface
Enclosure: Type 1

Volts: 120/208 Wye
Phases: 3
Wires: 4

A.I.C. Rating: 10 KA
Mains Type: M.L.O
Mains Rating: 125 A

CKT	Circuit Description	Trip	Poles	A		B		C		Poles	Trip	Circuit Description	CKT
1	TICKET AND WARMING KITCHEN UPLIGHT	20 A	1	72 VA	1020 VA					1	20 A	LOBBY LIGHTS	2
3	PUBLIC MEETING RM, TICKET/COUNTER OFFICE,...	20 A	1			767 VA	786 VA			1	20 A	LOBBY LIGHTS	4
5	OPERATOR'S DAY LIGHTS	20 A	1					490 VA	569 VA	1	20 A	GARBAGE RM, KITCHENS AND ELEC. RM LIGHTS	6
7	LOBBY EMERGENCY LIGHTS	20 A	1	888 VA	900 VA					1	20 A	TRANSFER CENTER SIGN	8
9	LOBBY LIGHTS	20 A	1			1116 VA	5194 VA			3	45 A	ACU-4	10
11	PUBLIC RESTROOMS LIGHTS	20 A	1					1510 VA	5194 VA	--	--	--	12
13	TRANSFER CENTER SIGN	20 A	1	900 VA	5194 VA					--	--	--	14
15	SPACE	--	--			0 VA	0 VA			--	--	SPACE	16
17	SPACE	--	--					0 VA	0 VA	--	--	SPACE	18
19	SPACE	--	--	0 VA	0 VA					--	--	SPACE	20
21	SPACE	--	--			0 VA	0 VA			--	--	SPACE	22
23	SPACE	--	--					0 VA	0 VA	--	--	SPACE	24
25	SPACE	--	--	0 VA	0 VA					--	--	SPACE	26
27	SPACE	--	--			0 VA	0 VA			--	--	SPACE	28
29	SPACE	--	--					0 VA	0 VA	--	--	SPACE	30
			Total Load:	8974 VA		7863 VA		7763 VA					
			Total Amps:	75 A		66 A		65 A					

Load Classification	Total Load	Demand Factor	Connected Load	Panel Totals	
Power	1848 VA	100.00%	1848 VA		
Lighting	7209 VA	125.00%	9011 VA	**Total Calculated Load**	24639 VA
HVAC (High)	15582 VA	125.00%	19478 VA	**Total Estimated Load**	30336 VA
				Total Calculated Load	68 A
				Total Estimated Load	84 A

PANELBOARD: G1

Location: ELEC. 112
Supply From:
Mounting: Surface
Enclosure: Type 1

Volts: 120/208 Wye
Phases: 3
Wires: 4

A.I.C. Rating: 10 KA
Mains Type: M.L.O
Mains Rating: 250 A

CKT	Circuit Description	Trip	Poles	A		B		C		Poles	Trip	Circuit Description	CKT
1	PANEL 'G2'	100 A	3	10240...	1188 VA					1	20 A	1st FLOOR GARAGE LIGHTS	2
3	--	--	--			10740...	224 VA			1	20 A	ROOF GRATE LIGHTS	4
5	--	--	--					10360...	1544 VA	1	20 A	2nd FLOOR GARAGE LIGHTS	6
7	PANEL 'E'	50 A	2	937 VA	528 VA					1	20 A	1st FLOOR GARAGE LIGHTS	8
9	--	--	--			1500 VA	960 VA			1	20 A	GARAGE STORAGE LIGHTS	10
11	AHIU-3	20 A	2					1000 VA	670 VA	1	20 A	GARAGE RAMP LIGHTS	12
13	--	--	--	1000 VA	1544 VA					1	20 A	2nd FLOOR GARAGE POLE LIGHTS	14
15	CU-3	20 A	2			1000 VA	665 VA			1	20 A	2nd FLOOR GARAGE LIGHTS	16
17	--	--	--					1000 VA	609 VA	1	20 A	WEST TOWER LIGHTS	18
19	ELEVATOR C.B. ENCLOSURE 208V, 3PH	150 A	3	8000 VA	965 VA					1	20 A	2nd FLOOR GARAGE POLE LIGHTS	20
21	--	--	--			8000 VA	1229 VA			1	20 A	2nd FLOOR EAST TOWER LIGHTS	22
23	--	--	--					8000 VA	600 VA	1	20 A	PARKING GARAGE ENTRY SIGN	24
25	GARAGE I.T. ROOM OUTLET	20 A	2	500 VA	300 VA					1	20 A	SUN METRO SIGN	26
27	--	--	--			500 VA	480 VA			1	20 A	GARAGE OUTSIDE LIGHTS	28
29	GARAGE I.T. ROOM OUTLET	20 A	2					500 VA	600 VA	1	20 A	ENTRANCE PARKING SIGN	30
31	--	--	--	500 VA	540 VA					1	20 A	EAST TOWER ROOF COVE LIGHTS	32
33	SUN METRO SIGN	20 A	1			300 VA	540 VA			1	20 A	WEST TOWER ROOF COVE LIGHTS	34
35	STAIRS SIGN	20 A	1					400 VA	160 VA	1	20 A	CANOPY LIGHTS	36
37	CANOPY LIGHTS	20 A	1	726 VA	6 VA					1	20 A	DMX CONTROLLER	38
39	SPACE	--	--			0 VA	0 VA			--	--	SPACE	40
41	SPACE	--	--					0 VA	0 VA	--	--	SPACE	42
			Total Load:	26974 VA		26138 VA		25443 VA					
			Total Amps:	226 A		219 A		212 A					

Load Classification	Total Load	Demand Factor	Connected Load	Panel Totals	
HVAC	4000 VA	100.00%	4000 VA		
Receptacle	17200 VA	50.00%	8600 VA	**Total Calculated Load**	78567 VA
Power	29666 VA	100.00%	29666 VA	**Total Estimated Load**	64892 VA
Lighting	11701 VA	125.00%	14626 VA	**Total Calculated Load**	218 A
Special Outlets	16000 VA	50.00%	8000 VA	**Total Estimated Load**	180 A

ALPHA ENGINEERING, INC.
ENGINEERING CONSULTANTS
1818 E. RIO GRANDE • EL PASO, TEXAS 79902
TEL. (915) 838-9900 • FAX. (915) 838-9909
REGISTRATION # F005236

2-4-2016

REFERENCES -- BENCHMARKS

ARCHITECTS SEAL

DATE	REVISIONS	BY

SCALE
HOR: SHOWN
VER: SHOWN

DATE 11/20/15
DES.CHKD BY Designer
DRAWN BY Author
CHKD BY Approver
APPD BY Approver

PROJECT NAME

NORTHGATE TRANSFER CENTER

EL PASO, TEXAS.

CITY OF EL PASO

CAPITAL IMPROVEMENT DEPARTMENT

SHEET TITLE

PANEL SCHEDULES

SHEET
E-602

PANELBOARD: G2

Location: ELEC. 112
Supply From: G1
Mounting: Surface
Enclosure: Type 1

Volts: 120/208 Wye
Phases: 3
Wires: 4

A.I.C. Rating: 10 KA
Mains Type: M.L.O
Mains Rating: 125 A

CKT	Circuit Description	Trip	Poles	A		B		C		Poles	Trip	Circuit Description	CKT
1	CAR CHARGER	40 A	2	1000 VA	1000 VA					2	40 A	CAR CHARGER	2
3	--	--	--			1000 VA	1000 VA			--	--	--	4
5	CAR CHARGER	40 A	2					1000 VA	1000 VA	2	40 A	CAR CHARGER	6
7	--	--	--	1000 VA	1000 VA					--	--	--	8
9	CAR CHARGER	40 A	2			1000 VA	1000 VA			2	40 A	CAR CHARGER	10
11	--	--	--					1000 VA	1000 VA	--	--	--	12
13	CAR CHARGER	40 A	2	1000 VA	1000 VA					2	40 A	CAR CHARGER	14
15	--	--	--			1000 VA	1000 VA			--	--	--	16
17	GARAGE I.T. ROOM OUTLET	30 A	2					500 VA	900 VA	1	20 A	1st FLOOR GARAGE OUTLETS	18
19	--	--	--	500 VA	900 VA					1	20 A	1st FLOOR GARAGE OUTLETS	20
21	1st FLOOR GARAGE OUTLETS	20 A	1			900 VA	900 VA			1	20 A	2nd FLOOR GARAGE OUTLETS	22
23	BICYCLE AND TOOL ROOM OUTLETS	20 A	1					1260 VA	900 VA	1	20 A	2nd FLOOR GARAGE OUTLETS	24
25	2nd FLOOR GARAGE OUTLETS	20 A	1	900 VA	540 VA					1	20 A	2ND FLOOR POLE MOUNTED OUTLETS	26
27	2nd FLOOR GARAGE OUTLETS	20 A	1			900 VA	1000 VA			1	20 A	EAST TOWER AUTOMATIC DOOR OPENER	28
29	2ND FLOOR POLE MOUNTED OUTLETS	20 A	1					360 VA	1000 VA	1	20 A	EAST TOWER AUTOMATIC DOOR OPENER	30
31	TOWER OUTLETS	20 A	1	360 VA	540 VA					1	20 A	GARAGE I.T. ROOM OUTLETS	32
33	EAST TOWER OUTLETS	20 A	1			540 VA	0 VA			--	--	SPACE	34
35	1st FLOOR GARAGE OUTLETS	20 A	1					1080 VA	360 VA	1	20 A	WEST TOWER OUTLETS	36
37	GARAGE I.T. ROOM OUTLET	30 A	2	500 VA	0 VA					--	--	SPACE	38
39	--	--	--			500 VA	0 VA			--	--	SPACE	40
41	SPACE	--	--					0 VA	0 VA	--	--	SPACE	42
			Total Load:	10240 VA		10740 VA		10360 VA					
			Total Amps:	85 A		90 A		86 A					

Load Classification	Total Load	Demand Factor	Connected Load	Panel Totals	
Receptacle	13340 VA	50.00%	6670 VA		
Power	2000 VA	100.00%	2000 VA	**Total Calculated Load**	31340 VA
Special Outlets	16000 VA	50.00%	8000 VA	**Total Estimated Load**	16670 VA
				Total Calculated Load	87 A
				Total Estimated Load	46 A

FUTURE LEASE SPACE
ELECTRICAL SERVICE #2 DISCONNECT 'M2' LOAD CALCULATIONS

	LOAD (VA)
LIGHTING 13,800 S.Q. F.T. X 3.5VA @ 125%	60,400
OUTLETS 13,800 S.Q. F.T. X 1VA	13,800
HVAC 13,800 S.Q. F.T. X 10VA	138,000
(8) ELECTRIC WATER HEATERS	36,000
TOTAL 248,200 VA	

I = 248,200 VA/ (208V)(1.73) = 690 AMPS
800 AMP, 120/208V, 3 PH., 3 POLE, TYPE 3R SWITCHBOARD 'M2'
FUSED AT 800 AMPS
(3) 3" CONDUITS EACH WITH 4-350 MCM CU. CONDRS.
1-3/0 CU. CONDR. FOR SERVICE GND.

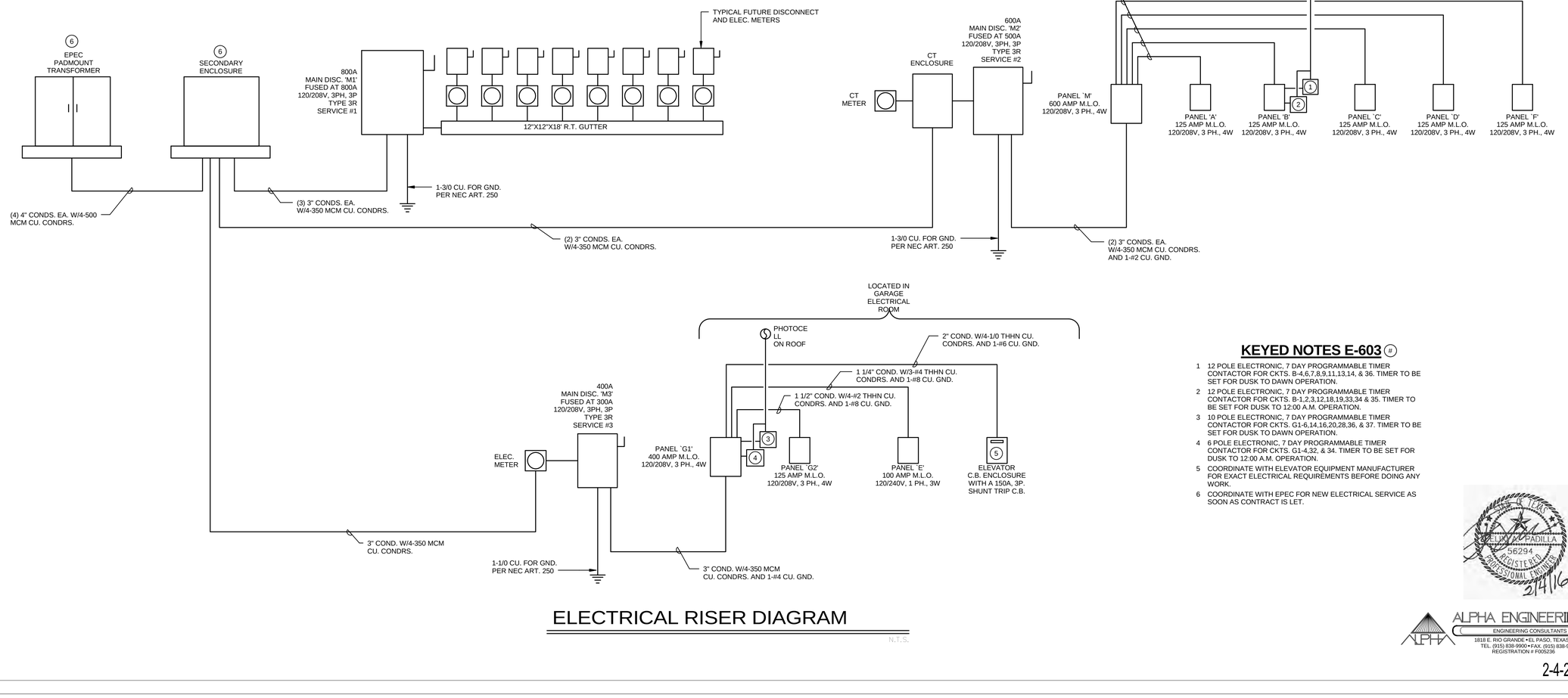

ELECTRICAL RISER DIAGRAM

N.T.S.

KEYED NOTES E-603 (#)

1. 12 POLE ELECTRONIC, 7 DAY PROGRAMMABLE TIMER CONTACTOR FOR CKTS. B-4,6,7,8,9,11,13,14, & 36. TIMER TO BE SET FOR DUSK TO DAWN OPERATION.
2. 12 POLE ELECTRONIC, 7 DAY PROGRAMMABLE TIMER CONTACTOR FOR CKTS. B-1,2,3,12,18,19,33,34 & 35. TIMER TO BE SET FOR DUSK TO 12:00 A.M. OPERATION.
3. 10 POLE ELECTRONIC, 7 DAY PROGRAMMABLE TIMER CONTACTOR FOR CKTS. G1-6,14,16,20,28,36, & 37. TIMER TO BE SET FOR DUSK TO DAWN OPERATION.
4. 6 POLE ELECTRONIC, 7 DAY PROGRAMMABLE TIMER CONTACTOR FOR CKTS. G1-4,32, & 34. TIMER TO BE SET FOR DUSK TO 12:00 A.M. OPERATION.
5. COORDINATE WITH ELEVATOR EQUIPMENT MANUFACTURER FOR EXACT ELECTRICAL REQUIREMENTS BEFORE DOING ANY WORK.
6. COORDINATE WITH EPEC FOR NEW ELECTRICAL SERVICE AS SOON AS CONTRACT IS LET.

ALPHA ENGINEERING, INC.
ENGINEERING CONSULTANTS
1818 E. RIO GRANDE • EL PASO, TEXAS 79902
TEL. (915) 838-9900 • FAX. (915) 838-9909
REGISTRATION # F005236

2-4-2016

REFERENCES — BENCHMARKS

DATE	REVISIONS	BY

ARCHITECTS SEAL

SCALE
HOR: SHOWN
VER: SHOWN

DATE 11/20/15
DESIGNED BY Designer
DRAWN BY Author
CHKD BY Approver
APPD BY Approver

PROJECT NAME
NORTHGATE TRANSFER CENTER
EL PASO, TEXAS.

CITY OF EL PASO
CAPITAL IMPROVEMENT DEPARTMENT

SHEET TITLE
PANEL SCHEDULES & RISER DIAGRAM

SHEET
E-603

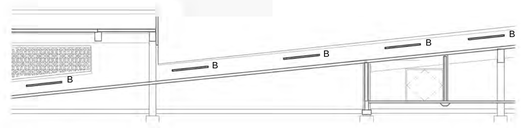

2 RAMP LIGHTING SECTION
1/16" = 1'-0"

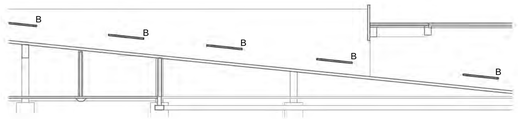

3 RAMP LIGHTING SECTION
1/16" = 1'-0"

KEYED NOTES EG-100 (#)

1 THIS CIRCUIT TO BE WIRED THRU TIMER CONTACTOR. CONTACTOR CONTROLLED BY PHOTOCELL. USE 3/4" CONDUIT WITH 2-#10 THHN CU. CONDRS. AND 1-#10 CU. GND.

2 PROVIDE AND INSTALL WP J-BOX FOR BICYCLE STORAGE ROOM. COORDINATE WITH ARCHITECT AND OWNER FOR EXACT LOCATION BEFORE DOING ANY WORK.

3 PROVIDE AND INSTALL J-BOX FOR BACKLIT GARAGE ENTRANCE SIGN. COORDINATE WITH ARCHITECT AND OWNER FOR EXACT LOCATION BEFORE DOING ANY WORK.

4 ALL EXITS AND EMERGENCY LIGHTS MUST BE CONNECTED TO UNSWITCHED HOT CONDUCTOR.

5 PROVIDE AND INSTALL WALL MOUNTED DUAL TECHNOLOGY OCCUPANCY SENSOR. SENSOR TO BE HUBBELL LH MT S 1 G IV OR EQUAL. WIRE PER MANUFACTURER'S INSTALLATION INSTRUCTIONS. SEE DETAIL 1/E-500 ON SHEET E-500

6 PROVIDE AND INSTALL CEILING MOUNTED DUAL TECHNOLOGY OCCUPANCY SENSOR. SENSOR TO BE HUBBELL OMNIDT2000BP1273 OR EQUAL. OCCUPANCY SENSOR IN RESTROOM MUST BE CONNECTED IN PARALLEL SO BOTH SENSORS CONTROL ALL LIGHTS.

7 PROVIDE AND INSTALL DMX CONTROLLER FOR FIXTURES TYPE 'SS' ON EAST AND WEST TOWERS. DMX CONTROLLER TO BE SPECIALTY LED NICOLAUDIE-STICK-KE-1 WITH POWER ADAPTER. PROVIDE DMX CABLE TO DECODERS IN EAST TOWER MECHANICAL ROOM AND WEST TOWER FIRE RISER ROOM. SEE DMX WIRING DIAGRAM ON SHEET EG-401. CONTRACTOR TO PROVIDE RECEPTACLE FOR POWER ADAPTER. COORDINATE WITH OWNER FOR EXACT LOCATION BEFORE DOING ANY WORK. CONTRACTOR SHALL PROVIDE SEVERAL SCENE OPTIONS ON CONTROLLER AS DIRECTED BY OWNER. SET CONTROLLER WITH INTEGRAL ASTRONOMICAL TIME CLOCK FOR SUNSET TO SUNRISE. OPERATION. CONTRACTOR SHALL PROVIDE COMMISSIONING FOR DMX SYSTEM AND 1 HR TRAINING SESSION TO OWNER ON OPERATION OF DMX CONTROLLER.

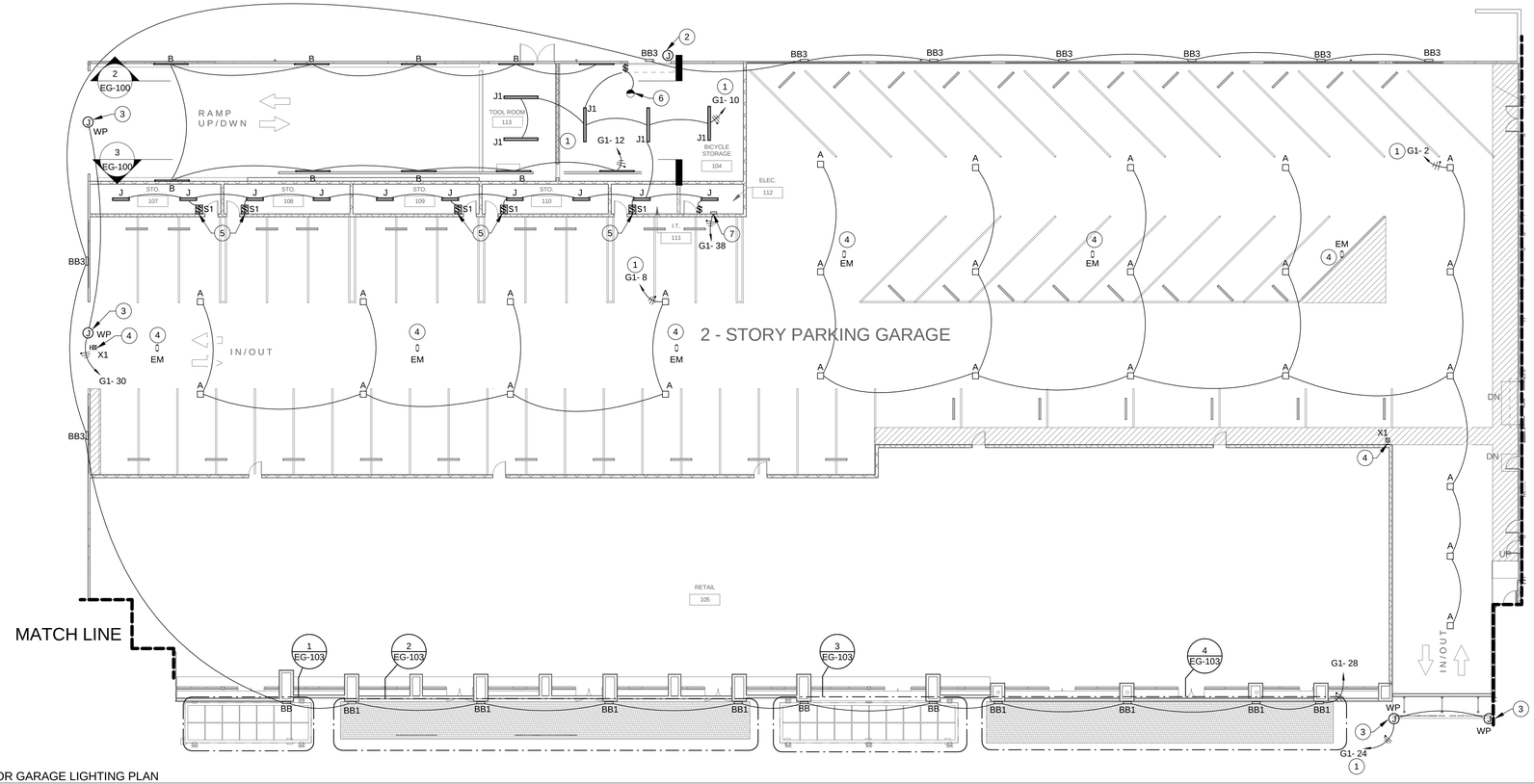

1 1st FLOOR GARAGE LIGHTING PLAN
1/16" = 1'-0"

ALPHA ENGINEERING, INC.
ENGINEERING CONSULTANTS
1818 E. RIO GRANDE • EL PASO, TEXAS 79902
TEL. (915) 838-9900 • FAX. (915) 838-9909
REGISTRATION # F005236

2-4-2016

REFERENCES — BENCHMARKS

DATE	REVISIONS	BY

ARCHITECTS SEAL

SCALE
HOR: SHOWN
VER: SHOWN

DATE 11/20/15
DES.CH.BY Designer
DRAWN BY Author
CHKD BY Principal
APPD BY Approver

PROJECT NAME

NORTHGATE TRANSFER CENTER

EL PASO, TEXAS.

CITY OF EL PASO
CAPITAL IMPROVEMENT DEPARTMENT

THE CITY OF EL PASO TEXAS

SHEET TITLE

1st FLOOR GARAGE LIGHTING PLAN

SHEET
EG-100

KEYED NOTES EG-101 (#)

1. THIS CIRCUIT TO BE WIRED THRU TIMER CONTACTOR. CONTACTOR CONTROLLED BY PHOTOCELL. USE 3/4" CONDUIT WITH 2-#10 THHN CU. CONDRS. AND 1-#10 CU. GND.
2. ALL EXITS AND EMERGENCY LIGHTS MUST BE CONNECTED TO UNSWITCHED HOT CONDUCTOR.
3. FIXTURE TO BE MOUNTED ON FLOOR, 24" AWAY FROM WALL. CONTRACTOR MUST AIM FIXTURE TOWARDS DECORATIVE GRATE. AIM AT NIGHT AS DIRECTED BY OWNER.
4. DMX SIGNAL AMPLIFIER ELATION DMX-BRANCH/4. INTALL INSIDE 24"X18"X8" WEATHER-PROOF J-BOX. LOCATED ON TOP OF RETAIL ROOF.

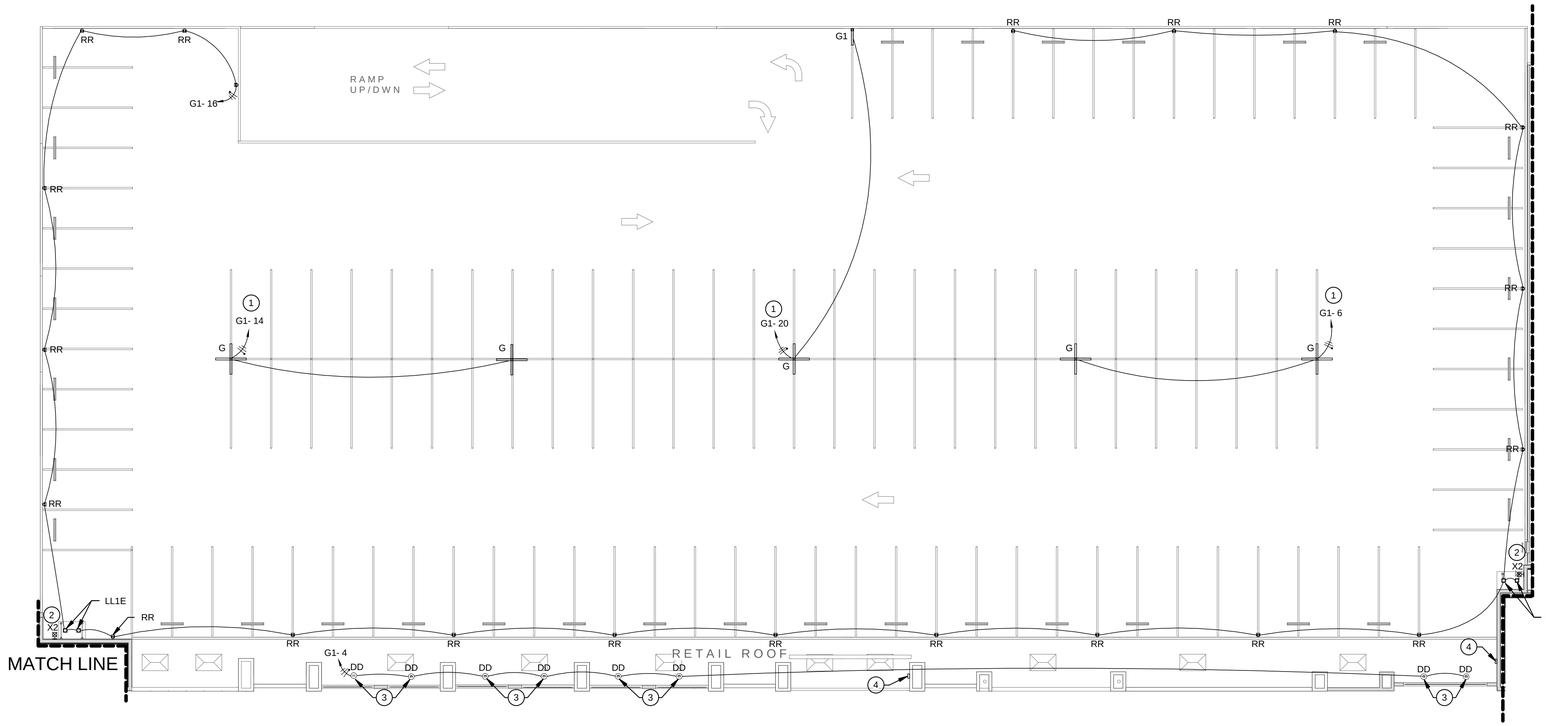

1 2nd FLOOR GARAGE LIGHTING PLAN
1/16" = 1'-0"

REFERENCES — BENCHMARKS

ARCHITECTS SEAL

SCALE
HOR: SHOWN
VER: SHOWN

DATE 11/20/15
DES.CKD.BY Designer
DRAWN BY Author
CHKD BY Principal
APPD BY Approver

REVISIONS	DATE	BY

PROJECT NAME

NORTHGATE TRANSFER CENTER

EL PASO, TEXAS.

CITY OF EL PASO
CAPITAL IMPROVEMENT DEPARTMENT

THE CITY OF EL PASO TEXAS

LUIS A. PADILLA
56294
REGISTERED PROFESSIONAL ENGINEER
STATE OF TEXAS
2/14/16

ALPHA ENGINEERING, INC.
ENGINEERING CONSULTANTS
1818 E. RIO GRANDE • EL PASO, TEXAS 79902
TEL. (915) 838-9900 • FAX. (915) 838-9909
REGISTRATION # F005236

2-4-2016

SHEET TITLE

2nd FLOOR GARAGE LIGHTING PLAN

SHEET
EG-101

KEYED NOTES EG-102 (#)

1 ALL EXITS AND EMERGENCY LIGHTS MUST BE CONNECTED TO UNSWITCHED HOT CONDUCTOR.

2 PROVIDE AND INSTALL J-BOX ON BUILDING FACADE FOR SUN METRO SIGN. COORDINATE WITH ARCHITECT FOR EXACT LOCATION BEFORE DOING ANY WORK.

3 PROVIDE AND INSTALL WALL MOUNTED DUAL TECHNOLOGY OCCUPANCY SENSOR. SENSOR TO BE HUBBELL LH MT S 1 G IV OR EQUAL. WIRE PER MANUFACTURER'S INSTALLATION INSTRUCTIONS. SEE DETAIL 1/E-900 ON THIS SHEET.

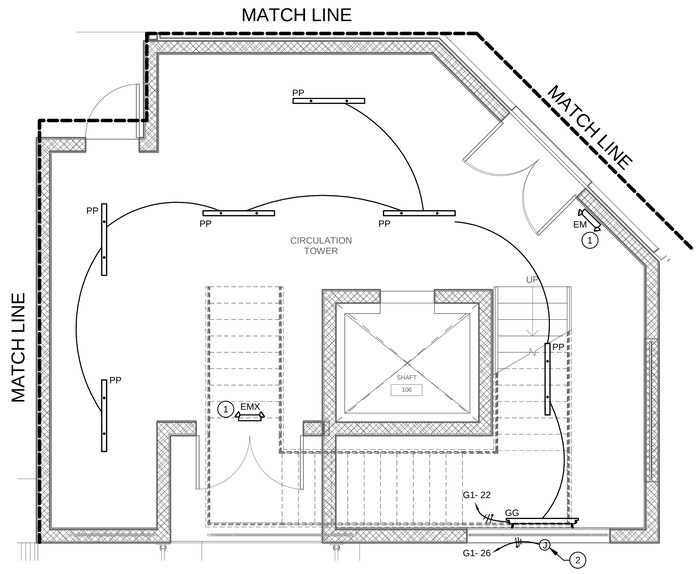

1 EAST CIRCULATION TOWER 1st FLOOR LIGHTING PLAN
1/4" = 1'-0"

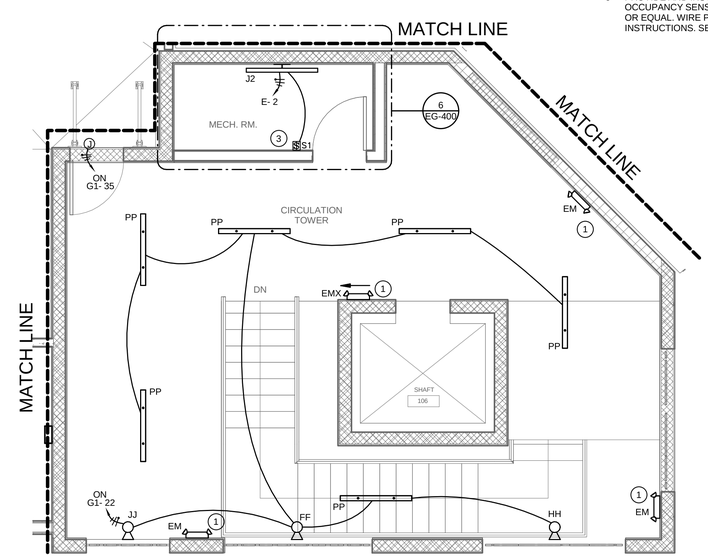

2 EAST CIRCULATION TOWER 2nd FLOOR LIGHTING PLAN
1/4" = 1'-0"

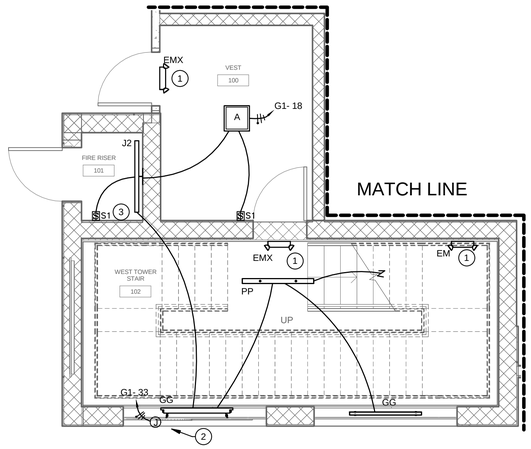

3 WEST CIRCULATION TOWER 1st FLOOR LIGHTING PLAN
1/4" = 1'-0"

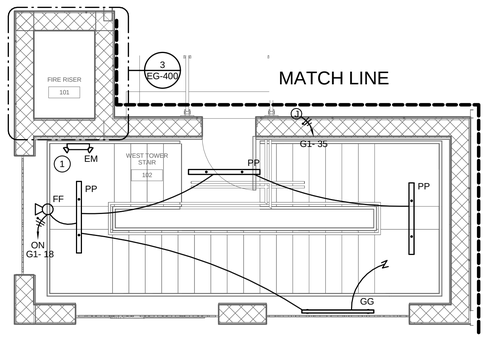

4 WEST CIRCULATION TOWER 2nd FLOOR LIGHTING PLAN
1/4" = 1'-0"

ALPHA ENGINEERING, INC.
ENGINEERING CONSULTANTS
1818 E. RIO GRANDE • EL PASO, TEXAS 79902
TEL. (915) 838-9900 • FAX. (915) 838-9909
REGISTRATION # F005236

2-4-2016

REFERENCES – BENCHMARKS

ARCHITECTS SEAL

REVISIONS	DATE	BY

SCALE
HOR: SHOWN
VER: SHOWN

DATE 11/20/15
DES.CON.BY Designer
DRAWN BY Author
CHKD BY Principal
APPD BY Approver

PROJECT NAME

NORTHGATE TRANSFER CENTER

EL PASO, TEXAS.

CITY OF EL PASO

CAPITAL IMPROVEMENT DEPARTMENT

SHEET TITLE

CIRCULATION TOWER LIGHTING PLAN

SHEET
EG-102

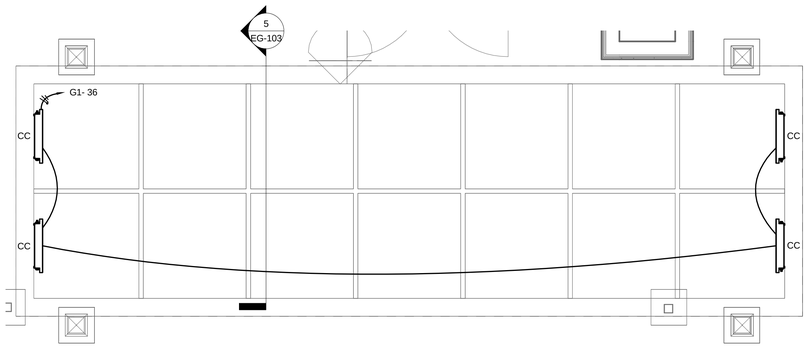

1 CANOPY #1 LIGHTING
3/8" = 1'-0"

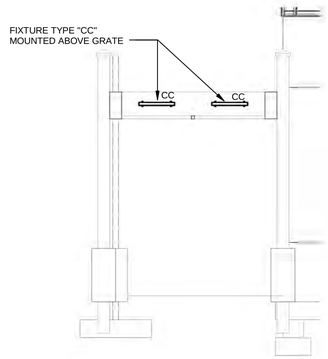

5 CANOPY #1 SECTION VIEW
1/4" = 1'-0"

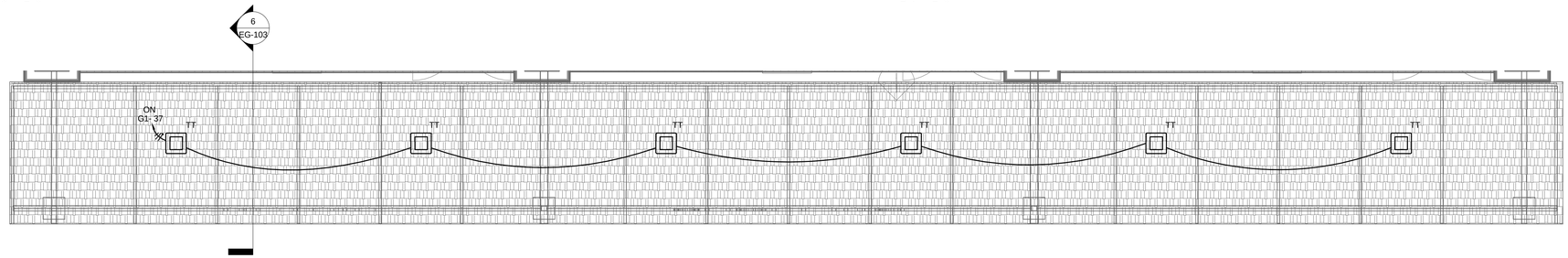

2 CANOPY #2 LIGHTING
1/4" = 1'-0"

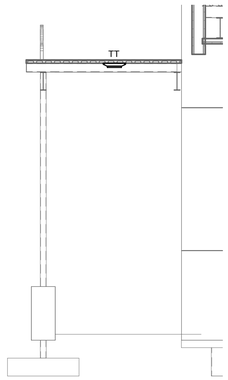

6 Canopy #2
1/4" = 1'-0"

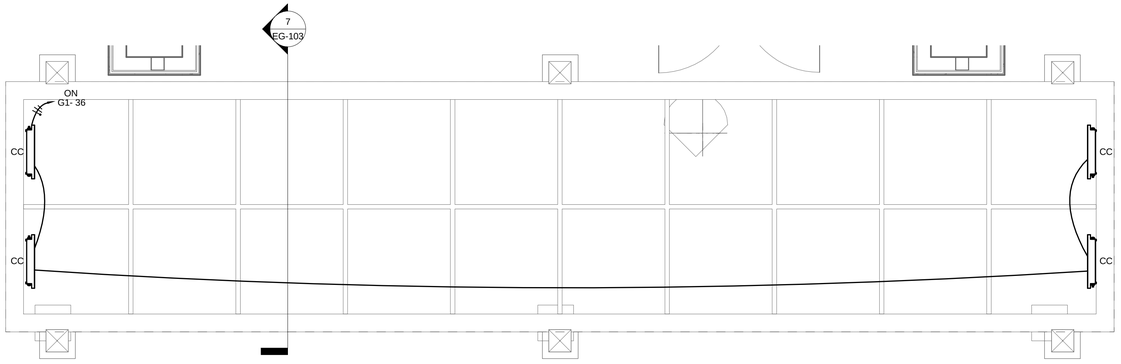

3 CANOPY #3 LIGHTING
3/8" = 1'-0"

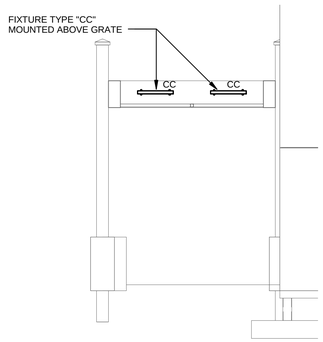

7 Canopy #3
1/4" = 1'-0"

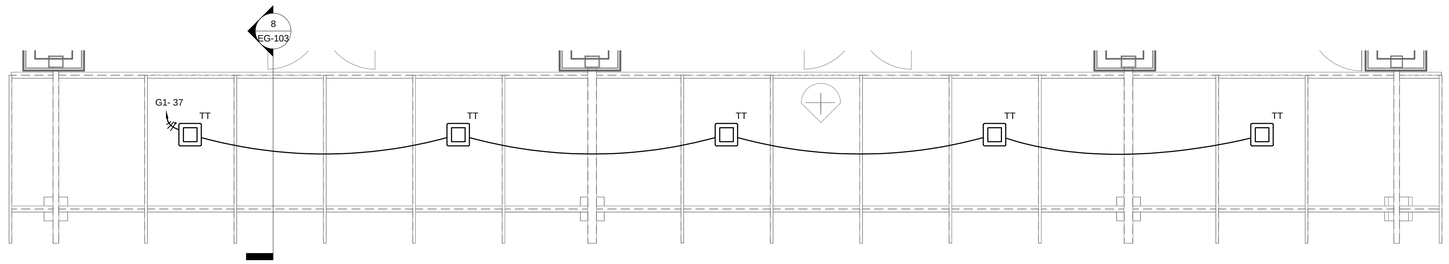

4 CANOPY #4 LIGHTING
1/4" = 1'-0"

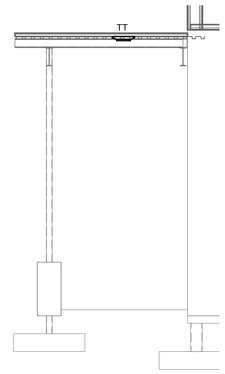

8 Canopy #4
1/4" = 1'-0"

2-4-2016

REFERENCES — BENCHMARKS

BY	REVISIONS	DATE

ARCHITECTS SEAL

SCALE
HOR: SHOWN
VER: SHOWN

DATE 11/2015
DESIGNED BY Designer
DRAWN BY Author
CHKD BY Principal
APPD BY Approver

PROJECT NAME
NORTHGATE TRANSFER CENTER
EL PASO, TEXAS.

CITY OF EL PASO
CAPITAL IMPROVEMENT DEPARTMENT

THE CITY OF EL PASO TEXAS

SHEET TITLE
CANOPIES
LIGHTING

SHEET
EG-103

ALPHA ENGINEERING, INC.
ENGINEERING CONSULTANTS
1818 E. RIO GRANDE • EL PASO, TEXAS 79902
TEL. (915) 838-9900 • FAX. (915) 838-9909
REGISTRATION # F005236

KEYED NOTES EG-200 (#)

1 PROVIDE AND INSTALL J-BOX ON BUILDING FACADE FOR TENANT SIGN. INSTALL 3/4" CONDUIT WITH PULLSTRING AND STUBB INTO FUTURE LEASE SPACE.

2 PROVIDE GFI RECEPTACLE WITH LOCKABLE WEATHER PROOF COVER.

3 PROPOSED LOCATION OF ELECTRICAL SERVICE. SEE RISER DIAGRAM ON SHEET E-601.

4 PROVIDE AND INSTALL 2" CONDUIT WITH PUILLSTRING FROM ELECTRICAL SERVICE TO FUTURE LEASE SPACES.

5 PROPOSED LOCATION OF EPECo PADMOUNT TRNSFORMER. COORDINATE WITH EPECo AS SOON AS CONTRACT IS LET FOR NEW SERVICE.

6 PROVIDE AND INSTALL 30A, 230V, 1PH, NEMA L6-30 TWIST-LOCK RECEPTACLE. CONTRACTOR MUST VERIFY EXACT LOCATION OF RECEPTACLE PRIOR TO ROUGH-IN WITH IT DEPARTMENT OF THE CITY OF EL PASO.

7 PROVIDE AND INSTALL 20A, 230V, 1PH, NEMA L6-20 TWIST-LOCK RECEPTACLE. CONTRACTOR MUST VERIFY EXACT LOCATION OF RECEPTACLE PRIOR TO ROUGH-IN WITH IT DEPARTMENT OF THE CITY OF EL PASO.

8 APPROXIMATE LOCATION OF AHIU-3. COORDINATE WITH MECHANICAL DRAWINGS FOR EXACT LOCATION.

9 5-1#12 THHN CU CNDRS. FOR CONTROL WIRING TO AIR HANDLER. COORDINATE WITH MECHANICAL PLANS BEFORE DOING ANY WORK.

10 PROPOSED LOCATION OF SECUNDARY ENCLOSURE. SEE ELECTRICAL RISER DIAGRAM ON SHEET E-603.

11 (4) 4" CONDUITS EACH WITH 4-500 MCM CU. CONDRS. FROM EPEC PADMOUNT TRANSFORMER TO SECONDARY ENCLOSURE. SEE RISER DIAGRAM ON SHEET E-603.

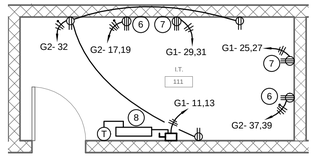

2 ENLRAGED I.T. ROOM
1/4" = 1'-0"

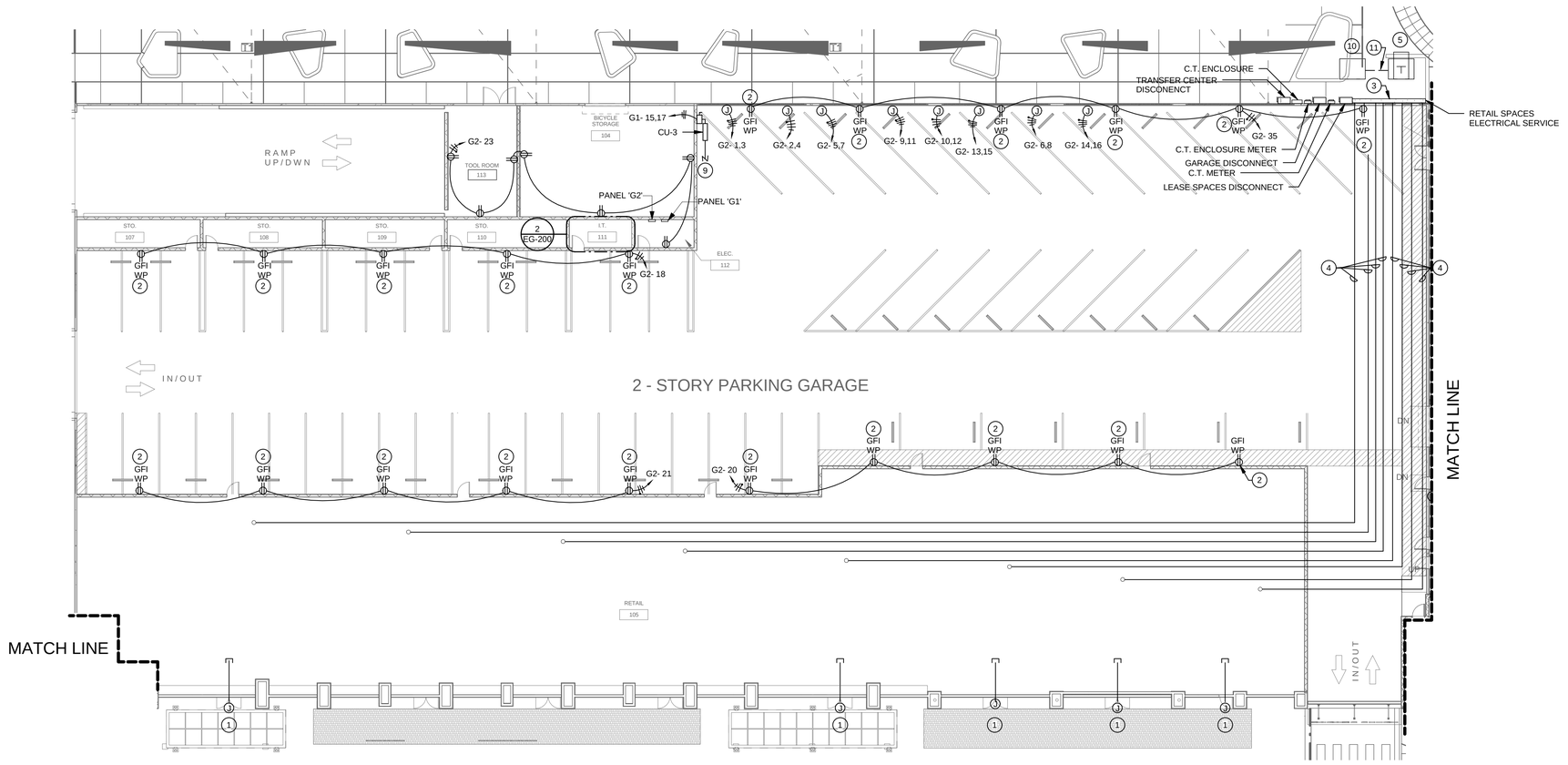

1 1st FLOOR GARAGE POWER PLAN
1/16" = 1'-0"

ALPHA ENGINEERING, INC.
ENGINEERING CONSULTANTS
1818 E. RIO GRANDE • EL PASO, TEXAS 79902
TEL. (915) 838-9900 • FAX. (915) 838-9909
REGISTRATION # F005236

2-4-2016

REFERENCES – BENCHMARKS

ARCHITECTS SEAL

DATE	REVISIONS	BY

SCALE
HOR: SHOWN
VER: SHOWN

DATE 11/20/15
DESIGNED BY Enrique
DRAWN BY Adrian
CHKD BY Rolando
APPD BY Approver

PROJECT NAME
NORTHGATE TRANSFER CENTER
EL PASO, TEXAS.

CITY OF EL PASO
CAPITAL IMPROVEMENT DEPARTMENT

SHEET TITLE
1st FLOOR GARAGE POWER PLAN

SHEET
EG-200

KEYED NOTES EG-201 (#)

1 PROVIDE GFI RECEPTACLE WITH LOCKABLE WEATHER PROOF COVER.

2 LIGHT POLE TO BE PROVIDED WITH GFI RECEPTACLE WITH WP COVER. MAKE CONNECTIONS TO RECEPTACLE ON POLE.

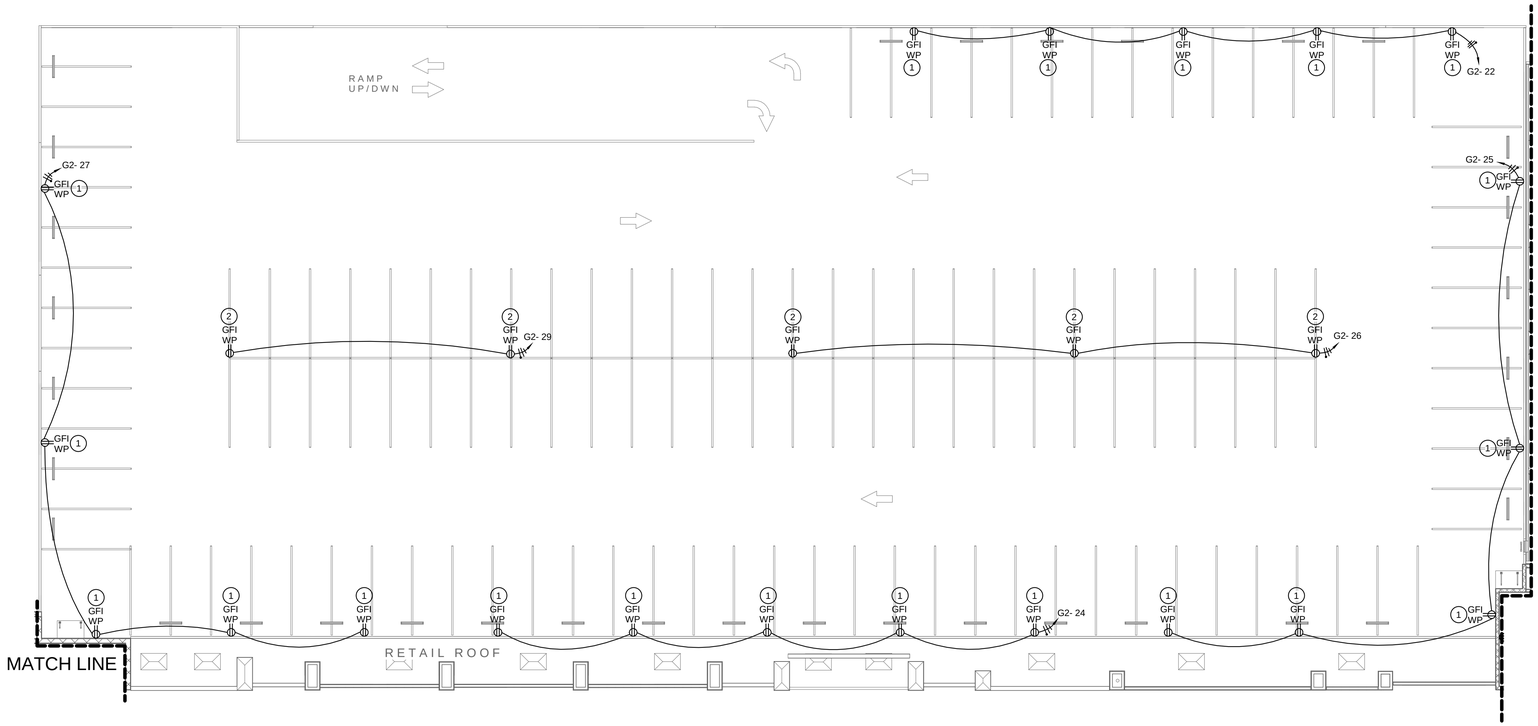

1 2nd FLOOR GARAGE POWER PLAN
1/16" = 1'-0"

REFERENCES — BENCHMARKS

DATE	REVISIONS	BY

ARCHITECTS SEAL

SCALE
HOR: SHOWN
VER: SHOWN

DATE 11/20/15
DES.CONSBY Design
DRAWN BY Author
CHKD BY Principal
APPD BY Approval

PROJECT NAME

NORTHGATE TRANSFER CENTER

EL PASO, TEXAS.

CITY OF EL PASO

CAPITAL IMPROVEMENT DEPARTMENT

THE CITY OF EL PASO TEXAS

STATE OF TEXAS
LUIS A. PADILLA
56294
REGISTERED
PROFESSIONAL ENGINEER
2/4/16

ALPHA ENGINEERING, INC.
ENGINEERING CONSULTANTS
1818 E. RIO GRANDE • EL PASO, TEXAS 79902
TEL. (915) 838-9900 • FAX. (915) 838-9909
REGISTRATION # F005236

2-4-2016

SHEET TITLE

2nd FLOOR GARAGE POWER PLAN

SHEET
EG-201

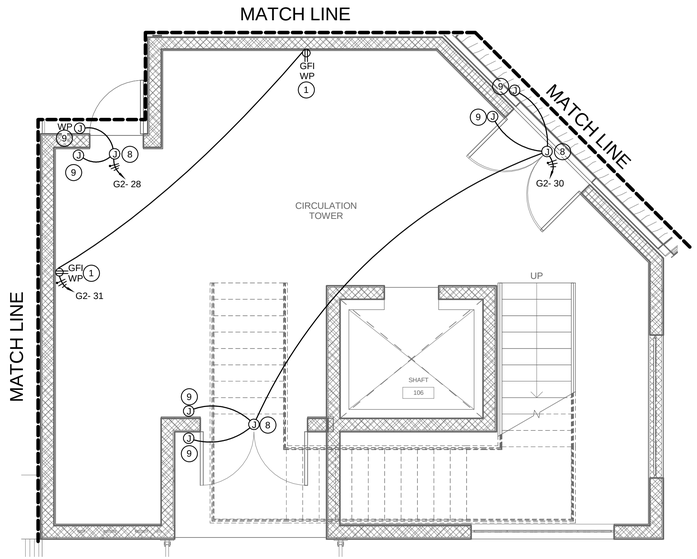

1 EAST CIRCULATION TOWER 1st FLOOR POWER PLAN
1/4" = 1'-0"

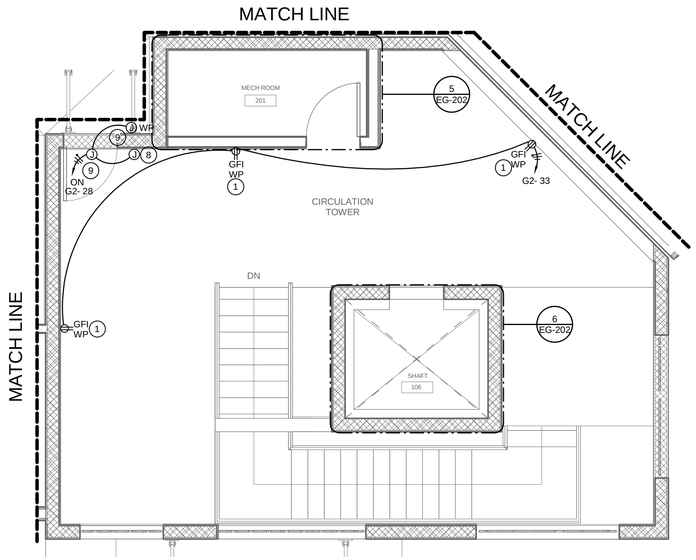

2 EAST CIRCULATION TOWER 2nd FLOOR POWER PLAN
1/4" = 1'-0"

KEYED NOTES EG-202

1 PROVIDE GFI RECEPTACLE WITH LOCKABLE WEATHER PROOF COVER.

2 F.A. INSTALLER TO CONNECT TO ELEVATOR RECALL SYSTEM. THIS SYSTEM TO INCLUDE SMOKE DETECTORS AND HEAT DETECTORS IN FIRST AND SECOND FLOOR ELEVATOR LOBBIES, SMOKE DETECTORS AND HEAT DETECTORS IN ELEVATOR SHAFT, AND IN ELEVATOR MECHANICAL ROOM. SYSTEM MUST BE CONNECTED TO F.A. CONTROL PANEL LOCATED IN ELECTRICAL ROOM. THAT MEETS ALL CODE REQUIREMENTS FOR ELEVATOR INSTALLATIONS.

3 VERIFY LOCATION OF RECEPTACLE FOR SUMP PUMP BEFORE ROUGH -IN. RECEPTACLE TO BE CONTROLLED BY SWITCH ON WALL. VERIFY EXACT LOCATION BEFORE ROUGH IN.

4 INSTALL TELEPHONE OUTLET IN MECHANICAL ROOM. VERIFY EXACT LOCATION BEFORE ROUGH-IN.

6 LOCKABLE C.B. ENCLOSURE FOR ELEVATOR CAB LIGHTS AND CONTROLLER. VERIFY EXACT LOCATION WITH ELEVATOR INSTALLER BEFORE ROUGH-IN.

7 CONNECT 1" COND. W/4-#4 THHN CU. CONDRS. AND 1-#6 CU. GND. TO C.B. ENCLOSURE WITH SHUNT TRIP 60A, 3P C.B. FED FROM 60A, 3P C.B. IN MAIN PANELBOARD 'G1'. CONTRACTOR MUST VERIFY EXACT CIRCUIT BREAKER SIZE REQUIRED WITH ELEVATOR MANUFACTURER AND INSTALLER BEFORE DOING ANY WORK.

8 PROVIDE AND INSTALL J-BOX (WITH RECEPTACLE IF REQUIRED) FOR POWER TO ADA DOOR OPENER. INSTALL 1/2" CONDUIT WITH PULLSTRING TO EACH DOOR OPENER PUSHBUTTON. COORDINATE WITH ARCHITECT FOR EXACT LOCATION AND REQUIREMENTS BEFORE DOING ANY WORK.

9 PROVIDE AND INSTALL J-BOX AT 48" A.F.F. FOR ADA PUSHBUTTON FOR DOOR OPENER. INSTALL 1/2" CONDUIT WITH PULLSTRING TO DOOR OPENER MOTOR. COORDINATE WITH ARCHITECT FOR EXACT LOCATION AND REQUIREMENTS BEFORE DOING ANY WORK.

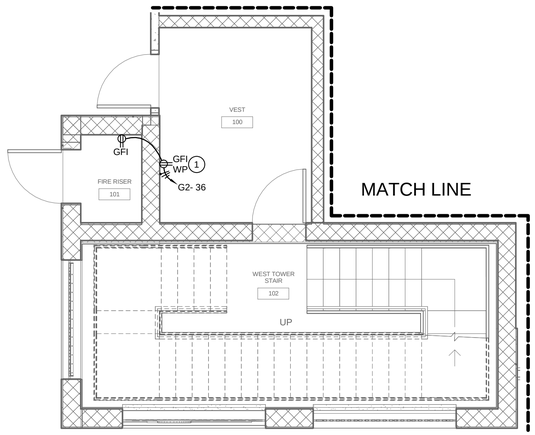

3 WEST CIRCULATION TOWER 1st FLOOR POWER PLAN
1/4" = 1'-0"

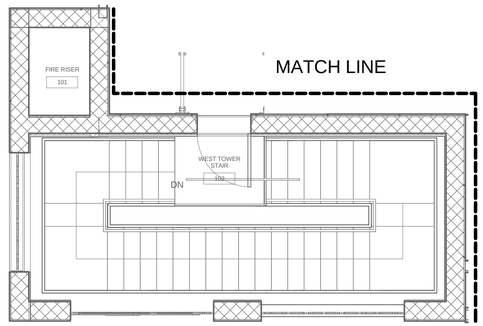

4 WEST CIRCULATION TOWER 2nd FLOOR POWER PLAN
1/4" = 1'-0"

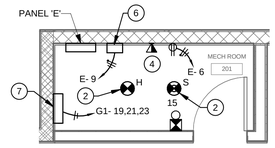

5 ENLARGED MECHANICAL ROOM PLAN
1/4" = 1'-0"

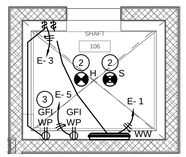

6 ELEVATOR PIT POWER PLAN
1/4" = 1'-0"

ALPHA ENGINEERING, INC.
ENGINEERING CONSULTANTS
1818 E. RIO GRANDE • EL PASO, TEXAS 79902
TEL. (915) 838-9900 • FAX. (915) 838-9909
REGISTRATION # F005236

2-4-2016

REFERENCES — BENCHMARKS

ARCHITECTS SEAL

DATE	REVISIONS	BY

SCALE
HOR: SHOWN
VER: SHOWN

DATE 11/20/15
DESIGNED BY Designer
DRAWN BY Author
CHKD BY Approver
APPD BY Approver

PROJECT NAME
NORTHGATE TRANSFER CENTER
EL PASO, TEXAS.

CITY OF EL PASO
CAPITAL IMPROVEMENT DEPARTMENT

SHEET TITLE
CIRCULATION TOWER POWER PLAN

SHEET
EG-202

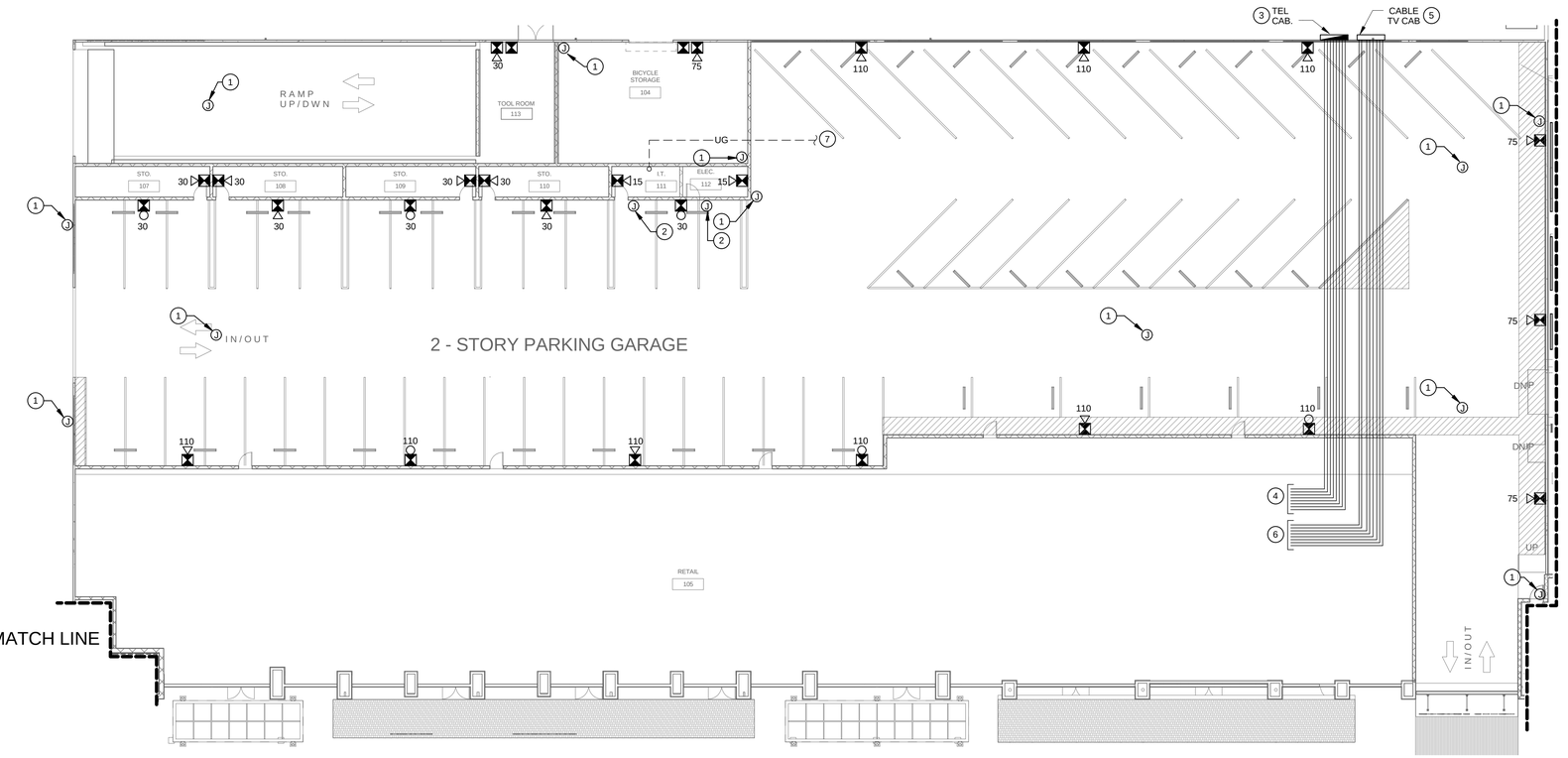

1 1st FLOOR GARAGE SPECIAL SYSTEMS PLAN
1/16" = 1'-0"

KEYED NOTES EG-300 (#)

1 PROVIDE AND INSTALL J-BOX FOR CCTV CAMERA. INSTALL 3/4" CONDUIT WITH PULLSTRING TO I.T. ROOM. VERIFY EXACT MOUNTING LOCATION, HEIGHT AND REQUIREMENTS WITH ARCHITECT AND OWNER BEFORE DOING ANY WORK.

2 PROVIDE AND INSTALL J-BOX AT 48" A.F.F. WITH 3/4" CONDUIT WITH PULLSTRING TO ACCESSIBLE CEILING FOR CARD READER. COORDINATE WITH ARCHITECT FOR EXACT LOCATION BEFORE DOING ANY WORK.

3 TELEPHONE TERMINAL CABINET 36"WX48"HX8"D RAINTIGHT, LOCKABLE CABINET. PROVIDE AND INSTALL 1" CONDUIT WITH PULLSTRING FOR EACH LEASE SPACE FROM CABINET. PROVIDE AND INSTALL 4" CONDUIT WITH PULLSTRING FROM TELEPHONE CABINET TO MAIN IT ROOM IN TRANSFER CENTER. COORDINATE WITH LOCAL TELEPHONE COMPANY BEFORE DOING ANY WORK.

4 PROVIDE AND INSTALL 1" CONDUIT WITH PULLSTRING AND BUSHINGS FOR TEL. WIRING FROM TELEPHONE CABINET TO EACH LEASE SPACE, TOTAL OF 8 LEASE SPACES. PROVIDE WITH TAGS AT BOTH ENDS. CONDUIT TO BE LABELED "TEL XXX" WHERE XXX IS THE NUMBER OF SUITE SERVED. INTERIOR CONDUITS MUST BE PERMANENTLY LABELED, VISIBLE FROM BELOW CONDUIT. COORDINATE WITH OWNER BEFORE DOING ANY WORK.

5 CABLE/TV TERMINAL CABINET 36"WX48"HX8"D RAINTIGHT, LOCKABLE CABINET. PROVIDE AND INSTALL 1" CONDUIT WITH PULLSTRING FOR EACH LEASE SPACE FROM CABINET. PROVIDE AND INSTALL 4" CONDUIT WITH PULLSTRING FROM CABLE/TV CABINET TO MAIN IT ROOM IN TRANSFER CENTER. COORDINATE WITH LOCAL CABLE/TV COMPANY BEFORE DOING ANY WORK.

6 PROVIDE AND INSTALL 1" CONDUIT WITH PULLSTRING AND BUSHINGS FOR CABLE TV WIRING FROM CABLE TV CABINET TO EACH LEASE SPACE, TOTAL OF 8 LEASE SPACES. PROVIDE WITH TAGS AT BOTH ENDS. CONDUIT TO BE LABELED "CABLE TV/SAT XXX" WHERE XXX IS THE NUMBER OF SUITE SERVED. INTERIOR CONDUITS MUST BE PERMANENTLY LABELED, VISIBLE FROM BELOW CONDUIT. COORDINATE WITH OWNER BEFORE DOING ANY WORK.

7 PROVIDE AND INSTALL 4" CONDUIT WITH PULLSTRING, BUSHINGS AND BELLCAPS UNDERGROUND FROM I.T. ROOM IN TRANSFER CENTER TO I.T. ROOM IN GARAGE. COORDINATE WITH OWNER AND FOR EXACT LOCATION AND REQUIREMENTS BEFORE DOING ANY WORK.

ALPHA ENGINEERING, INC.
ENGINEERING CONSULTANTS
1818 E. RIO GRANDE • EL PASO, TEXAS 79902
TEL. (915) 838-9900 • FAX. (915) 838-9909
REGISTRATION # F005236

2-4-2016

REFERENCES -- BENCHMARKS

ARCHITECTS SEAL

DATE	REVISIONS	BY

SCALE
HOR: SHOWN
VER: SHOWN

DATE 11/20/15
DES.CONSBY Designer
PROJ.MGR BY Author
CHKD BY Approver
APPD BY Approver

PROJECT NAME
NORTHGATE TRANSFER CENTER
EL PASO, TEXAS.

CITY OF EL PASO
CAPITAL IMPROVEMENT DEPARTMENT

SHEET TITLE
1st FLOOR GARAGE SPECIAL SYSTEMS

SHEET
EG-300

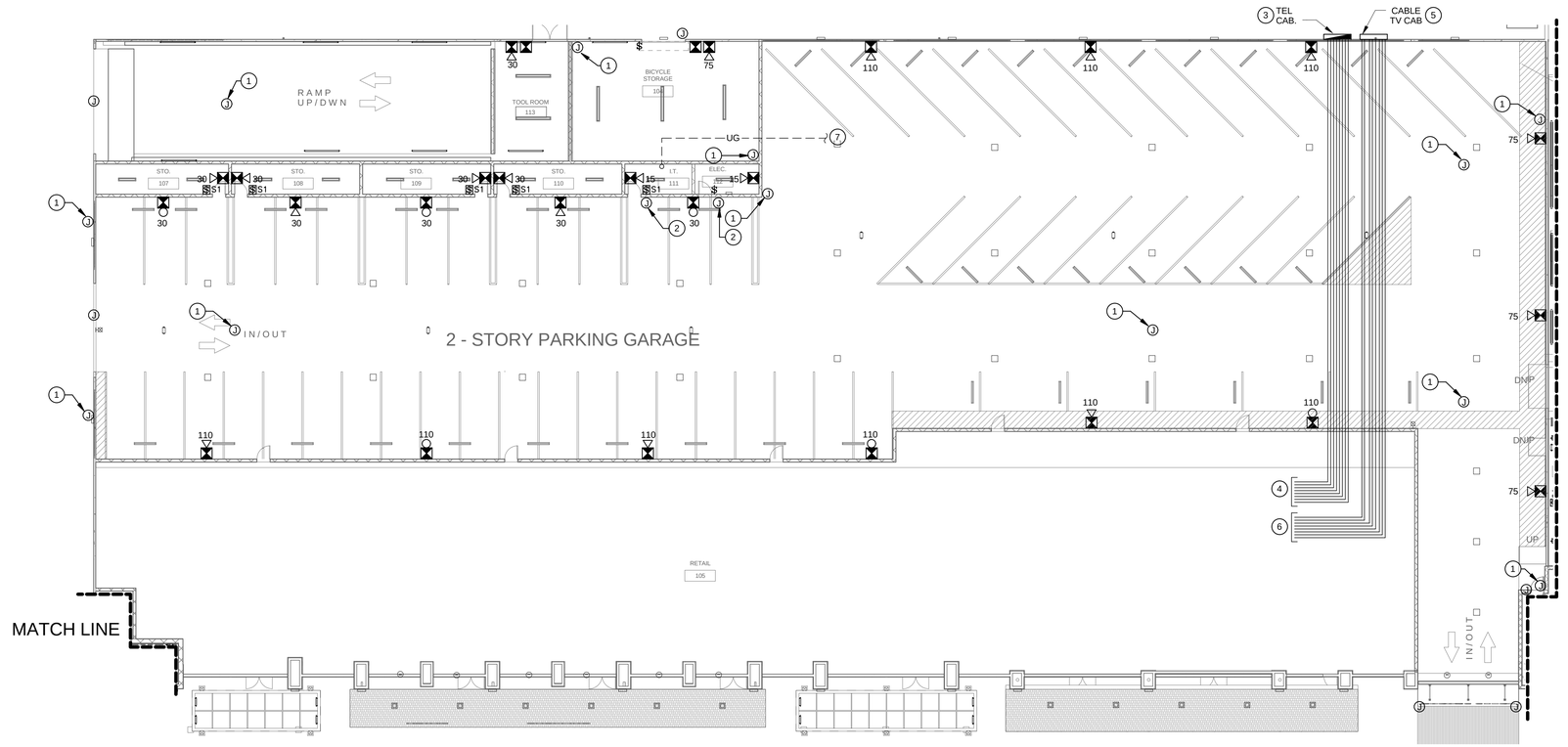

1 1st FLOOR GARAGE SPECIAL SYSTEMS PLAN
1/16" = 1'-0"

KEYED NOTES EG-300 (#)

1 PROVIDE AND INSTALL J-BOX FOR CCTV CAMERA. INSTALL 3/4" CONDUIT WITH PULLSTRING TO I.T. ROOM. VERIFY EXACT MOUNTING LOCATION, HEIGHT AND REQUIREMENTS WITH ARCHITECT AND OWNER BEFORE DOING ANY WORK.

2 PROVIDE AND INSTALL J-BOX AT 48" A.F.F. WITH 3/4" CONDUIT WITH PULLSTRING TO ACCESSIBLE CEILING FOR CARD READER. COORDINATE WITH ARCHITECT FOR EXACT LOCATION BEFORE DOING ANY WORK.

3 TELEPHONE TERMINAL CABINET 36"WX48"HX8"D RAINTIGHT, LOCKABLE CABINET. PROVIDE AND INSTALL 1" CONDUIT WITH PULLSTRING FOR EACH LEASE SPACE FROM CABINET. PROVIDE AND INSTALL 4" CONDUIT WITH PULLSTRING FROM TELEPHONE CABINET TO MAIN IT ROOM IN TRANSFER CENTER. COORDINATE WITH LOCAL TELEPHONE COMPANY BEFORE DOING ANY WORK.

4 PROVIDE AND INSTALL 1" CONDUIT WITH PULLSTRING AND BUSHINGS FOR TEL. WIRING FROM TELEPHONE CABINET TO EACH LEASE SPACE, TOTAL OF 8 LEASE SPACES. PROVIDE WITH TAGS AT BOTH ENDS. CONDUIT TO BE LABELED "TEL XXX" WHERE XXX IS THE NUMBER OF SUITE SERVED. INTERIOR CONDUITS MUST BE PERMANENTLY LABELED, VISIBLE FROM BELOW CONDUIT. COORDINATE WITH OWNER BEFORE DOING ANY WORK.

5 CABLE/TV TERMINAL CABINET 36"WX48"HX8"D RAINTIGHT, LOCKABLE CABINET. PROVIDE AND INSTALL 1" CONDUIT WITH PULLSTRING FOR EACH LEASE SPACE FROM CABINET. PROVIDE AND INSTALL 4" CONDUIT WITH PULLSTRING FROM CABLE/TV CABINET TO MAIN IT ROOM IN TRANSFER CENTER. COORDINATE WITH LOCAL CABLE/TV COMPANY BEFORE DOING ANY WORK.

6 PROVIDE AND INSTALL 1" CONDUIT WITH PULLSTRING AND BUSHINGS FOR CABLE TV WIRING FROM CABLE TV CABINET TO EACH LEASE SPACE, TOTAL OF 8 LEASE SPACES. PROVIDE WITH TAGS AT BOTH ENDS. CONDUIT TO BE LABELED "CABLE TV/SAT XXX" WHERE XXX IS THE NUMBER OF SUITE SERVED. INTERIOR CONDUITS MUST BE PERMANENTLY LABELED, VISIBLE FROM BELOW CONDUIT. COORDINATE WITH OWNER BEFORE DOING ANY WORK.

7 PROVIDE AND INSTALL 4" CONDUIT WITH PULLSTRING, BUSHINGS AND BELLCAPS UNDERGROUND FROM I.T. ROOM IN TRANSFER CENTER TO I.T. ROOM IN GARAGE. COORDINATE WITH OWNER AND FOR EXACT LOCATION AND REQUIREMENTS BEFORE DOING ANY WORK.

ALPHA ENGINEERING, INC.
ENGINEERING CONSULTANTS
1818 E. RIO GRANDE • EL PASO, TEXAS 79902
TEL. (915) 838-9900 • FAX. (915) 838-9909
REGISTRATION # F-005236

2-4-2016

REFERENCES – BENCHMARKS

ARCHITECTS SEAL

REVISIONS		
DATE		BY

SCALE
HOR: SHOWN
VER: SHOWN

DATE 11/20/15
DESIGNED BY Designer
DRAWN BY Author
CHKD BY Approver
APPD BY Approver

PROJECT NAME
NORTHGATE TRANSFER CENTER
EL PASO, TEXAS.

CITY OF EL PASO
CAPITAL IMPROVEMENT DEPARTMENT

SHEET TITLE
1st FLOOR GARAGE SPECIAL SYSTEMS

SHEET
EG-300

KEYED NOTES EG-301 (#)

1 PROVIDE AND INSTALL J-BOX FOR CCTV CAMERA AT 9' A.F.F. INSTALL 3/4" CONDUIT WITH PULLSTRING TO I.T. ROOM. VERIFY EXACT MOUNTING LOCATION, HEIGHT AND REQUIREMENTS WITH ARCHITECT AND OWNER BEFORE DOING ANY WORK.

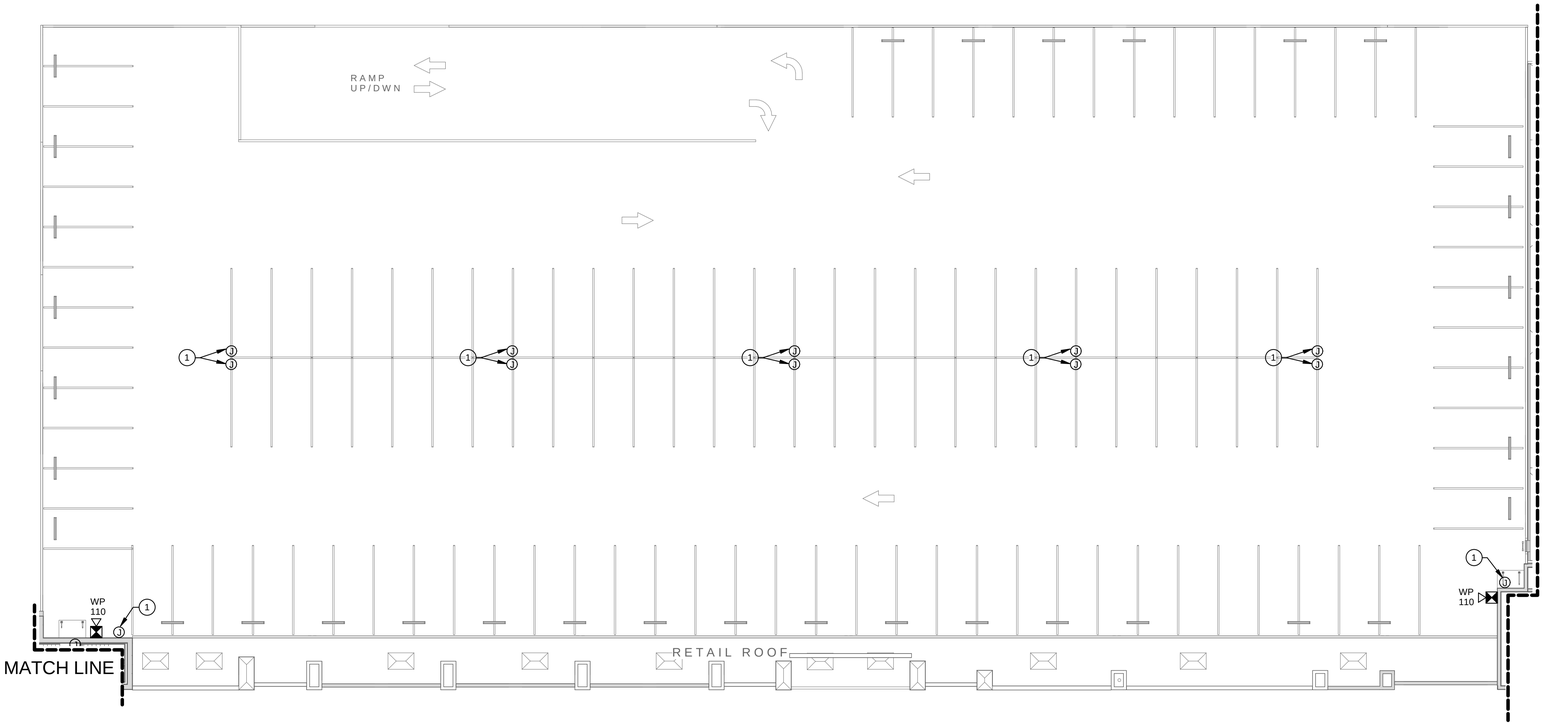

1 2nd FLOOR GARAGE SPECIAL SYSTEMS PLAN
1/16" = 1'-0"

REFERENCES — BENCHMARKS

DATE	REVISIONS	BY

ARCHITECTS SEAL

SCALE
HOR: SHOWN
VER: SHOWN

DATE 11/20/15
DES.CKD.BY Designer
DRAWN BY Author
CHKD BY Principal
APPD. BY Approver

PROJECT NAME

NORTHGATE TRANSFER CENTER

EL PASO, TEXAS.

CITY OF EL PASO

CAPITAL IMPROVEMENT DEPARTMENT

THE CITY OF EL PASO TEXAS

STATE OF TEXAS
LUKE PADILLA
56294
REGISTERED
PROFESSIONAL ENGINEER
2/14/16

ALPHA ENGINEERING, INC.
ENGINEERING CONSULTANTS
1818 E. RIO GRANDE • EL PASO, TEXAS 79902
TEL. (915) 838-9900 • FAX. (915) 838-9909
REGISTRATION # F005236

2-4-2016

SHEET TITLE

2nd FLOOR
GARAGE SPECIAL
SYSTEMS

SHEET
EG-301

KEYED NOTES EG-302 (#)

1 PROVIDE AND INSTALL J-BOX FOR CCTV CAMERA. INSTALL 3/4" CONDUIT WITH PULLSTRING TO I.T. ROOM. VERIFY EXACT MOUNTING LOCATION, HEIGHT AND REQUIREMENTS WITH ARCHITECT AND OWNER BEFORE DOING ANY WORK.

2 F.A. INSTALLER TO CONNECT TO ELEVATOR RECALL SYSTEM. THIS SYSTEM TO INCLUDE SMOKE DETECTORS AND HEAT DETECTORS IN FIRST AND SECOND FLOOR ELEVATOR LOBBIES, SMOKE DETECTORS AND HEAT DETECTORS IN ELEVATOR SHAFT, AND IN ELEVATOR MECHANICAL ROOM. SYSTEM MUST BE CONNECTED TO F.A. CONTROL PANEL LOCATED IN ELECTRICAL ROOM. THAT MEETS ALL CODE REQUIREMENTS FOR ELEVATOR INSTALLATIONS.

3 PROVIDE AND INSTALL J-BOX AT 48" A.F.F. WITH 3/4" CONDUIT WITH PULLSTRING TO ACCESSIBLE CEILING FOR CARD READER. COORDINATE WITH ARCHITECT FOR EXACT LOCATION BEFORE DOING ANY WORK.

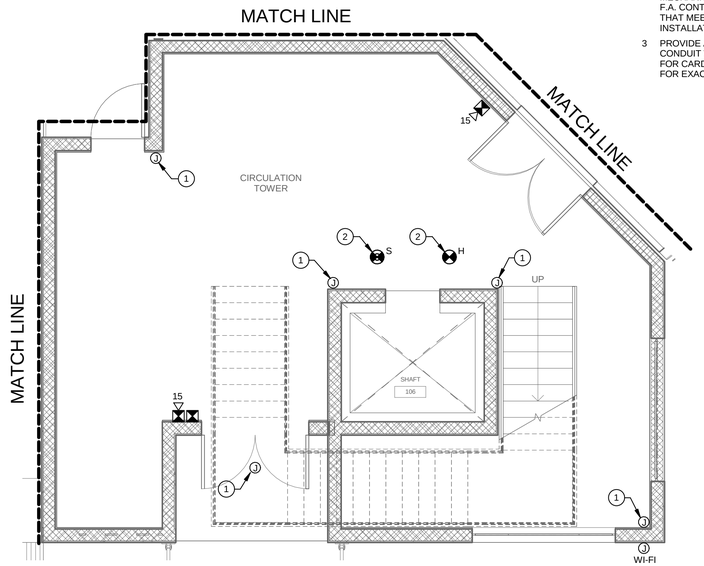

1 WEST CIRCULATION TOWER 1st FLOOR SPECIAL SYSTEMS PLAN
1/4" = 1'-0"

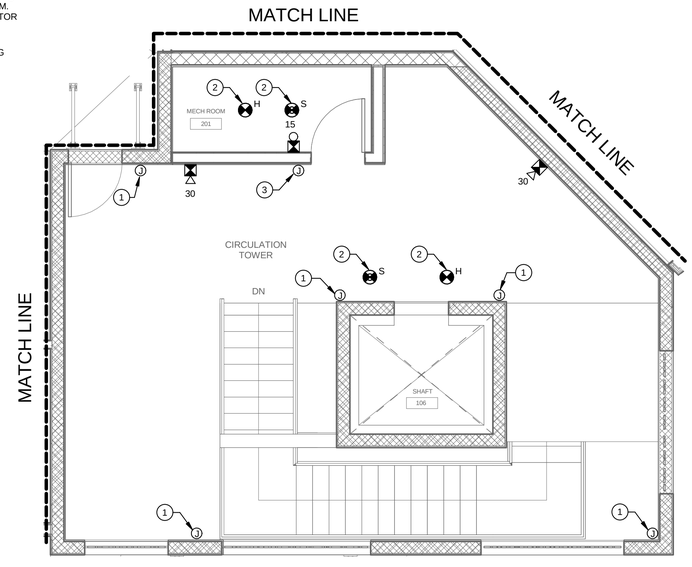

3 WEST CIRCULATION TOWER 2nd FLOOR SPECIALS SYSTEMS PLAN
1/4" = 1'-0"

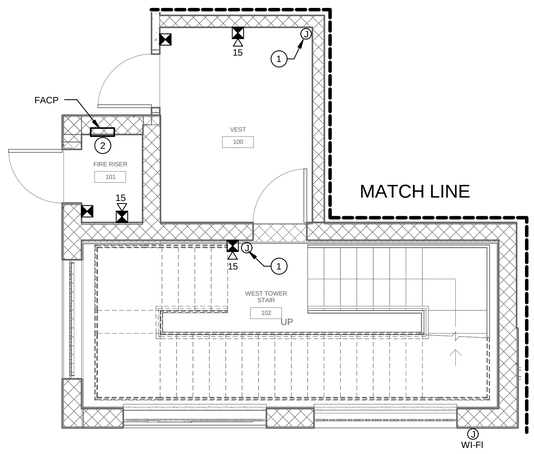

2 EAST CIRCULATION TOWER 1st FLOOR SPECIAL SYSTEMS PLAN
1/4" = 1'-0"

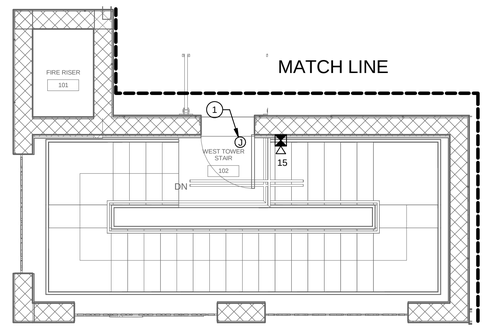

4 EAST CIRCULATION TOWER 2nd FLOOR SPECIAL SYSTEMS PLAN
1/4" = 1'-0"

REFERENCES — BENCHMARKS

DATE	REVISIONS	BY

ARCHITECTS SEAL

SCALE
HOR: SHOWN
VER: SHOWN

DATE 11/20/15
DESIGNED BY Designer
DRAWN BY Author
CHKD BY Principal
APPD BY Approver

PROJECT NAME

NORTHGATE TRANSFER CENTER

EL PASO, TEXAS.

CITY OF EL PASO

CAPITAL IMPROVEMENT DEPARTMENT

THE CITY OF EL PASO TEXAS

ALPHA ENGINEERING, INC.
ENGINEERING CONSULTANTS
1818 E. RIO GRANDE • EL PASO, TEXAS 79902
TEL. (915) 838-9900 • FAX. (915) 838-9909
REGISTRATION # F005236

2-4-2016

SHEET TITLE

CIRCULATION TOWER SPECIAL SYSTEMS PLAN

SHEET
EG-302

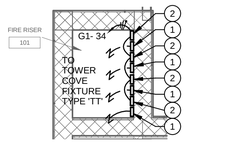

3 WEST TOWER POWER SUPPLY PLAN
1/4" = 1'-0"

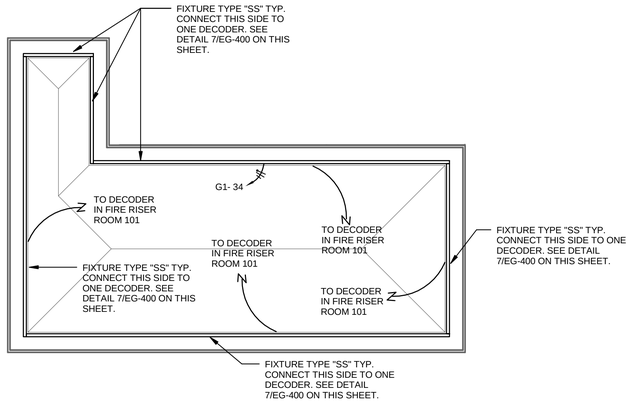

1 WEST CIRCULATION TOWER ROOF LIGHTING PLAN
1/4" = 1'-0"

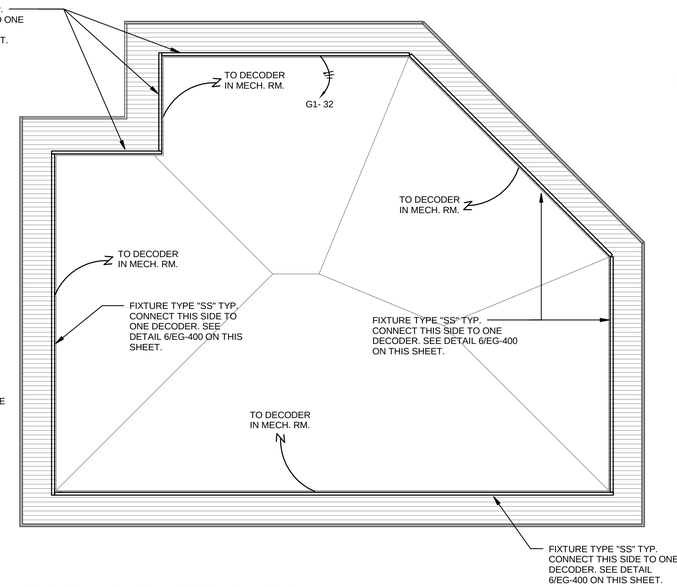

2 EAST CIRCULATION TOWER ROOF LIGHTING PLAN
1/4" = 1'-0"

KEYED NOTES EG-400

1 PROVIDE AND INSTALL SPECIALTY LED DECODER RFX-DMX-CV-DECODER FOR ROOF COVE LIGHTING

2 INSTALL POWER SUPPLY SPECILTY LED XFMR-24-150 FOR POWER TO ROOF COVE LIGHTING. MAKE CONNECTIONS TO DECODER.

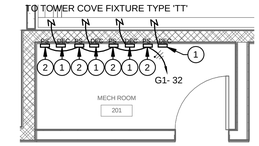

6 WEST TOWER POWER SUPPLY PLAN
1/4" = 1'-0"

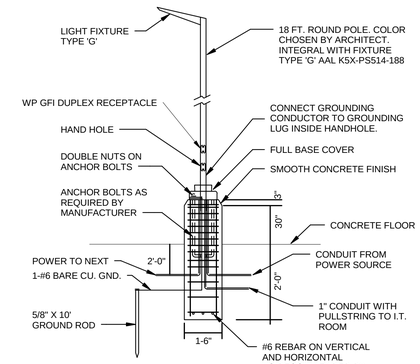

FIXTURE TYPE 'G' POLE DETAIL

3 EG-400

NTS

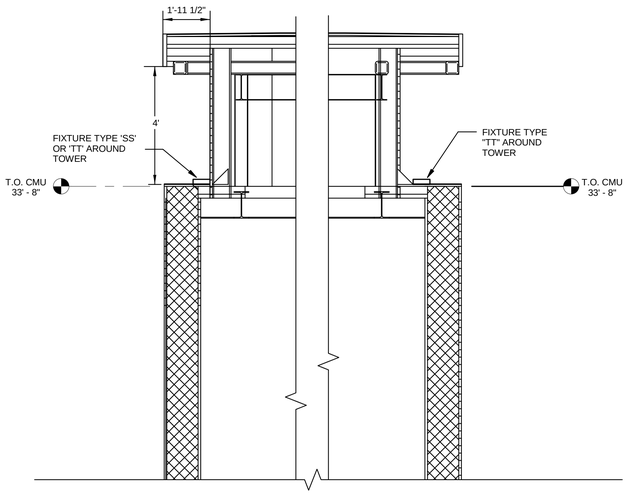

TYPICAL TOWER LIGHT FIXTURE 'SS' AND 'TT' MOUNTING DETAIL

4 EG-400

NTS

DMX WIRING DIAGRAM

5 EG-400

NOTES: CONTRACTOR MUST VERIFY EXACT INSTALLATION REQUIREMENTS WITH MANUFACTURER BEFORE DOING ANY WORK.

NTS

ALPHA ENGINEERING, INC.
ENGINEERING CONSULTANTS
1818 E. RIO GRANDE • EL PASO, TEXAS 79902
TEL. (915) 838-9900 • FAX. (915) 838-9909
REGISTRATION # F005236

2-4-2016

REFERENCES – BENCHMARKS

ARCHITECTS SEAL

DATE	REVISIONS	BY

SCALE
HOR: SHOWN
VER: SHOWN

DATE 11/20/15
DESIGNED BY Designer
DRAWN BY Author
CHKD BY Approver
APPD BY Approver

PROJECT NAME
NORTHGATE TRANSFER CENTER
EL PASO, TEXAS.

CITY OF EL PASO
CAPITAL IMPROVEMENT DEPARTMENT

SHEET TITLE
TOWERS ROOF LIGHTING AND GARAGE DETAILS

SHEET
EG-400

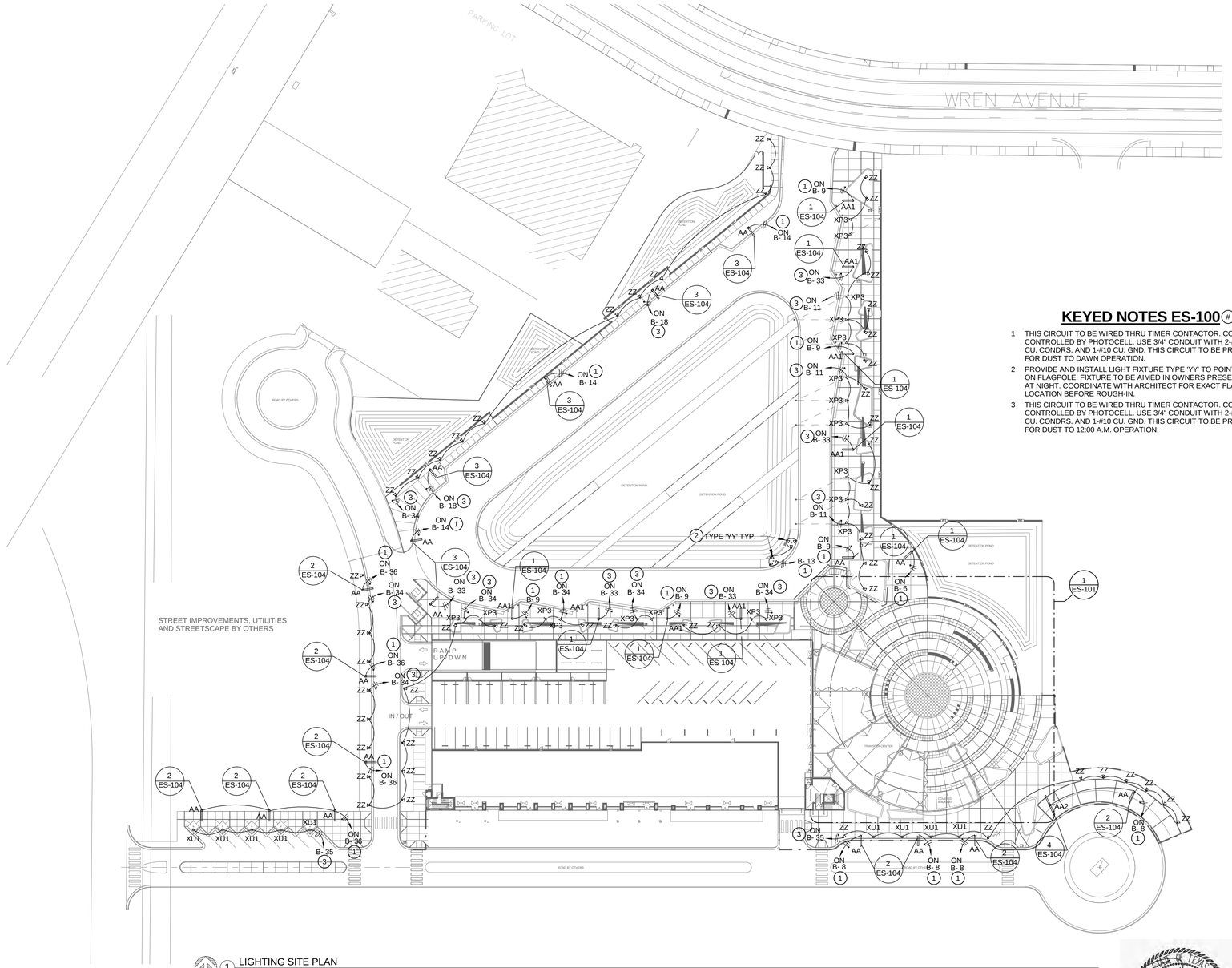

1 LIGHTING SITE PLAN
1" = 50'-0"

KEYED NOTES ES-100 (#)

1 THIS CIRCUIT TO BE WIRED THRU TIMER CONTACTOR. CONTACTOR CONTROLLED BY PHOTOCELL. USE 3/4" CONDUIT WITH 2-#10 THHN CU. CONDRS. AND 1-#10 CU. GND. THIS CIRCUIT TO BE PROGRAMED FOR DUST TO DAWN OPERATION.

2 PROVIDE AND INSTALL LIGHT FIXTURE TYPE 'YY' TO POINT AT FLAG ON FLAGPOLE. FIXTURE TO BE AIMED IN OWNERS PRESENCE AND AT NIGHT. COORDINATE WITH ARCHITECT FOR EXACT FLAGPOLE LOCATION BEFORE ROUGH-IN.

3 THIS CIRCUIT TO BE WIRED THRU TIMER CONTACTOR. CONTACTOR CONTROLLED BY PHOTOCELL. USE 3/4" CONDUIT WITH 2-#10 THHN CU. CONDRS. AND 1-#10 CU. GND. THIS CIRCUIT TO BE PROGRAMED FOR DUST TO 12:00 A.M. OPERATION.

CITY OF EL PASO OUTDOOR LIGHTING ORDINANCE

PROJECT ZONING:	C3	ORDINANCE LIGHTING ZONE:	E-4
PROJECT AREA: (ACRE)	7.37	ALLOWED LUMENS PER ACRE:	1,000,000
PERMITTED LUMENS:	7,368,457	ILLUMINATED SIGN CURFEW: A TIME CLOCK IS PROVIDED FOR THE BLDG SIGN AND THE SITE SIGN POLE	12:00 PM

OUTDOOR TOTAL LUMENS CALCULATION

MOUNTING	WATT SOURCE	LUMENS LAMP	COUNT	TOTAL LUMENS
POLE 'AA'	193W LED	19,031	17	323,527
POLE 'AA1'	193W LED	19,031	9	171,279
POLE 'AA2'	193W LED	19,031	2	38,062
POLE 'G' 'G1'	193W LED	19,031	21	399,651
WALL 'RR'	29W LED	2,291	21	48,111
RECESSED 'LL1E'	14W LED	1,110	6	6,660
RECESSED 'LLE'	43W LED	5,500	2	11,000
FLOOR 'DD'	28W LED	1,212	8	9,696
CANOPY 'XP3'	23W LED	1,526	62	94,612
IN-GRADE 'XU1'	14W LED	885	9	7,965
IN-GRADE 'XU2'	23W LED	1,647	4	6,588
IN-GRADE 'W'	23W LED	1,647	4	6,588
STEP LIGHT 'UL1'	2.5W LED	120	9	1,080
PENDANT 'Z'	45W LED	2,585	12	31,020
STRING 'NN'	2.5W LED	135	98	13,230
CANOPY 'KK' @25%	186W LED	3,895	2	7,790
CANOPY 'KK2E' @25%	186W LED	1,948	1	1,948
CANOPY 'KK2'@25%	45W LED	1,948	2	3,896
WALL 'BB', 'BB1'	24W LED	1,737	11	19,107
WALL 'BB2'	30W LED	2,606	6	15,636
WALL 'BB3'	24W LED	1,737	9	15,633
WALL 'B'	65W LED	5,976	10	59,760
CANOPY 'CC', 'MM'	30W LED	1,212	20	24,240
CANOPY 'TT'	66W LED	8,713	11	95,843
INGRADE 'ZZ'	14W LED	1,778	61	108,458
			TOTAL	1,521,380

THE TOTAL 1,521,380 LUMENS FOR THIS PROJECT IS LESS THAN THE 7,368,457 LUMENS PERMITTED THEREFORE THE PROJECT COMPLIES WITH THE EL PASO OUTDOOR ORDINANCE

REFERENCES -- BENCHMARKS

DATE	REVISIONS	BY

ARCHITECTS SEAL

SCALE
HOR: SHOWN
VER: SHOWN

DATE 11/20/15
DES.CONSBY Designer
DRAWN BY Author
CHKD BY Principal
APPD BY Approver

PROJECT NAME

NORTHGATE TRANSFER CENTER

EL PASO, TEXAS.

CITY OF EL PASO

CAPITAL IMPROVEMENT DEPARTMENT

THE CITY OF EL PASO TEXAS

STATE OF TEXAS
FELIX R. PADILLA
56294
REGISTERED PROFESSIONAL ENGINEER
2/4/16

SHEET TITLE

LIGHTING SITE PLAN

ALPHA ENGINEERING, INC.
ENGINEERING CONSULTANTS
1818 E. RIO GRANDE • EL PASO, TEXAS 79902
TEL. (915) 838-9900 • FAX. (915) 838-9909
REGISTRATION # F005236

2-4-2016

SHEET
ES-100

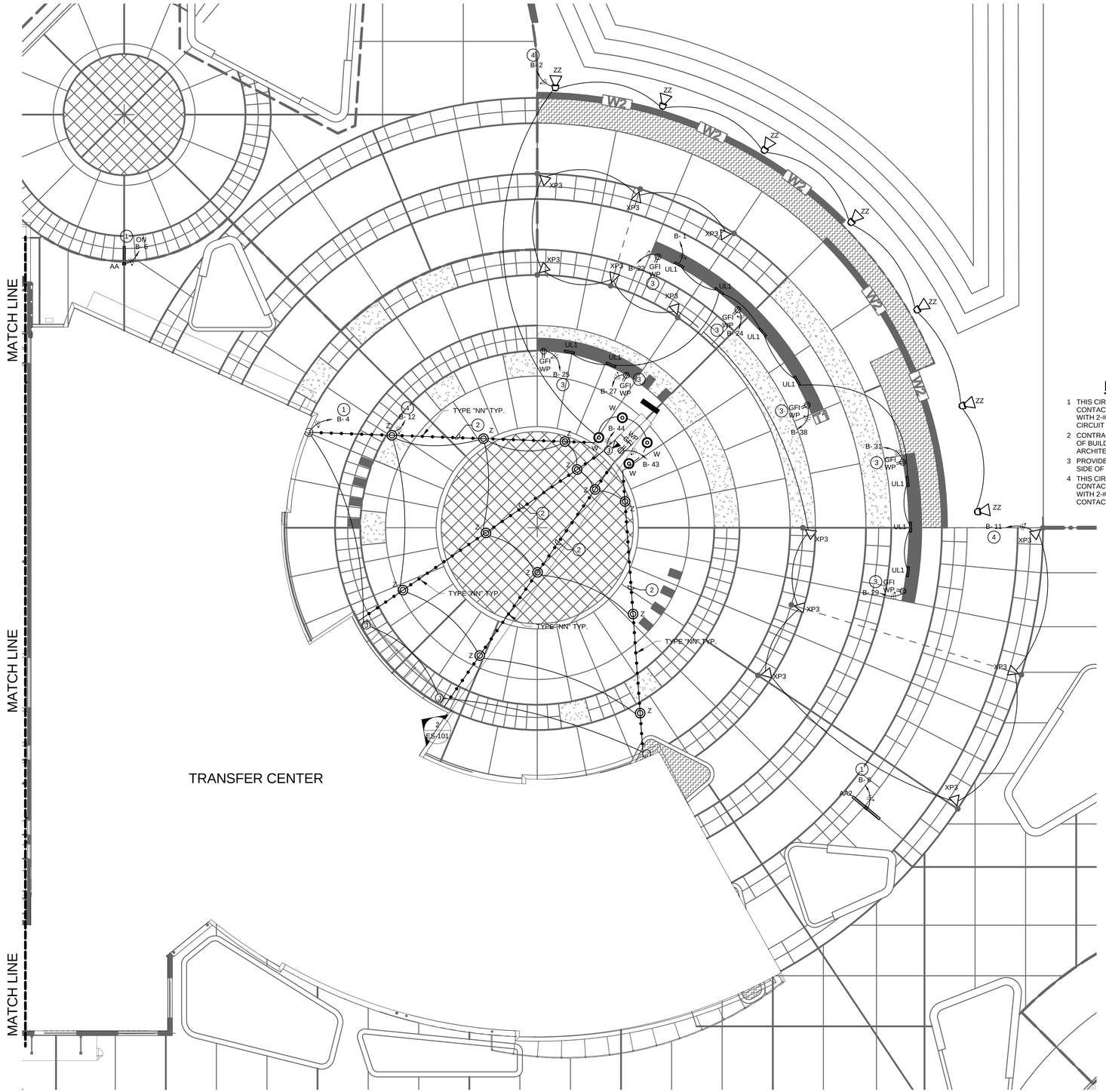

1 ENLARGED ELECTRICAL SITE PLAN
3/32" = 1'-0"

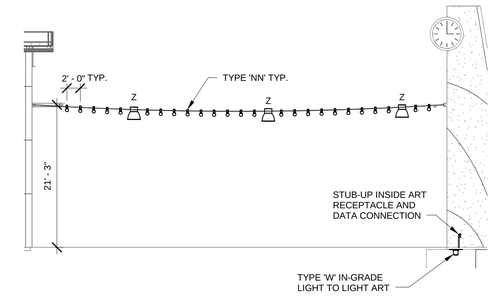

2 PLAZA AIRCRAFT SUSPENDED LIGHTING SECTION
3/32" = 1'-0"

KEYED NOTES ES-101

1 THIS CIRCUIT TO BE WIRED THRU TIMER CONTACTOR. CONTACTOR CONTROLLED BY PHOTOCELL. USE 3/4" CONDUIT WITH 2-#10 THHN CU. CONDRS. AND 1-#10 CU. GND. THIS CIRCUIT TO BE PROGRAMED FOR DUST TO DAWN OPERATION.

2 CONTRACTOR TO PROVIDE AIR CRAFT CABLE FROM CORNER OF BUILDING ROOF TO SCULPTURE. COORDINATE WITH ARCHITECT.

3 PROVIDE AND INSTALL WP/GFI RECEPTACLE AT 9" A.F.F. ON SIDE OF BENCH.

4 THIS CIRCUIT TO BE WIRED THRU TIMER CONTACTOR. CONTACTOR CONTROLLED BY PHOTOCELL. USE 3/4" CONDUIT WITH 2-#10 THHN CU. CONDRS. AND 1-#10 CU. GND. CONTACTOR TO BE SET FOR DUST TO 12:00 A.M..

2-4-2016

ALPHA ENGINEERING, INC.
ENGINEERING CONSULTANTS
1818 E. RIO GRANDE • EL PASO, TEXAS 79902
TEL. (915) 838-9900 • FAX. (915) 838-9909
REGISTRATION # F005236

REFERENCES — BENCHMARKS

BY	REVISIONS	DATE

ARCHITECTS SEAL

SCALE
HOR: SHOWN
VER: SHOWN

DATE 11/20/15
DES./CHK'BY Designer
DRAWN BY Author
CHKD. BY Approver
APPD. BY Approver

PROJECT NAME
NORTHGATE TRANSFER CENTER
EL PASO, TEXAS.

CITY OF EL PASO
CAPITAL IMPROVEMENT DEPARTMENT

SHEET TITLE
ENLARGED ELECTRICAL SITE PLAN

SHEET
ES-101

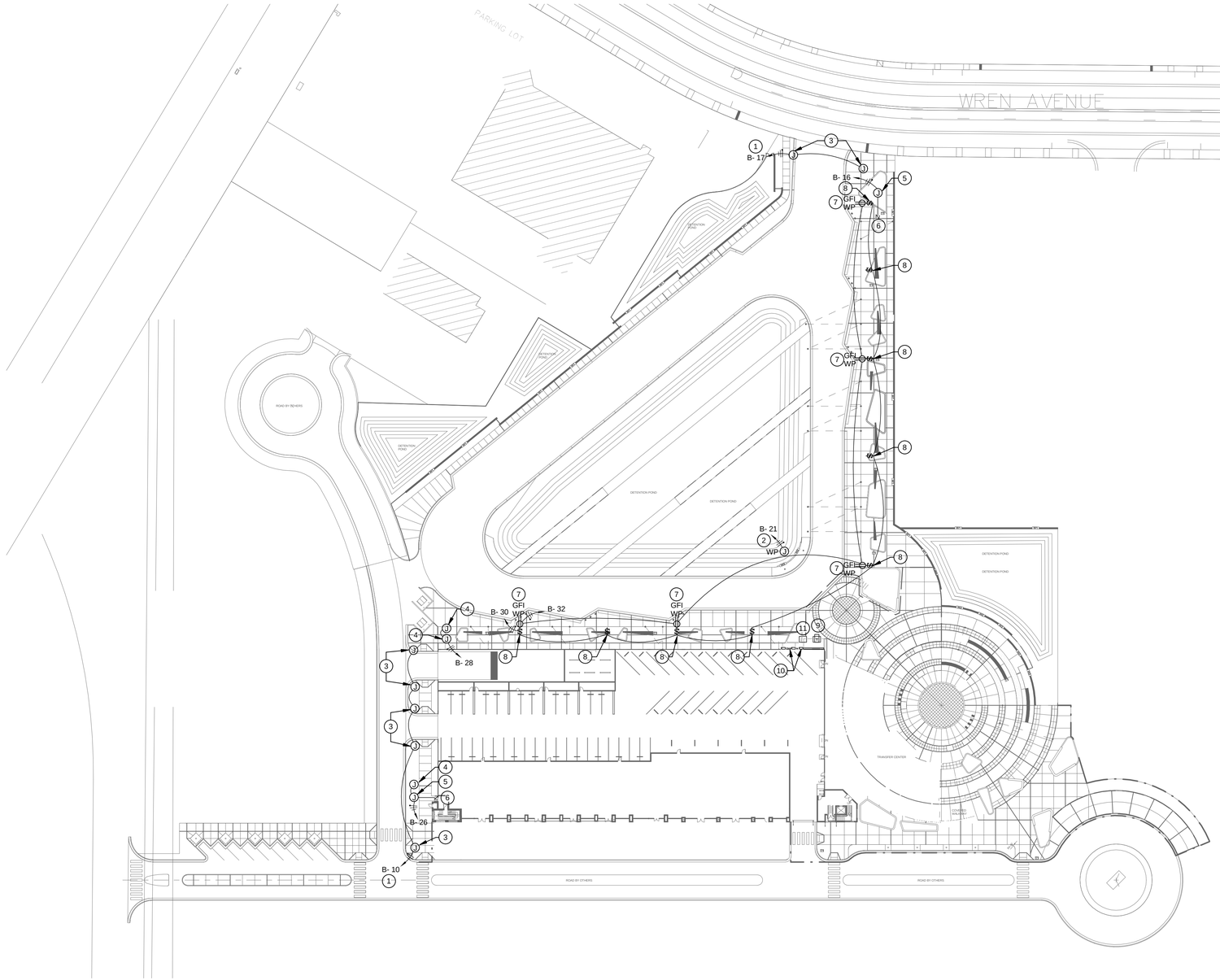

1 POWER SITE PLAN
1" = 50'-0"

KEYED NOTES ES-102 (#)

1 THIS CIRCUIT TO BE WIRED THRU TIMER CONTACTOR. CONTACTOR CONTROLLED BY PHOTOCELL. USE 3/4" CONDUIT WITH 2-#10 THHN CU. CONDRS. AND 1-#10 CU. GND.

2 PROVIDE AND INSTALL 12"X24"X12" WP J-BOX WITH TWO GFI RECEPTACLES FOR CAMERA POWER. COORDINATE WITH OWNER FOR EXACT LOCATION BEFORE DOING ANY WORK.

3 FLOOR J-BOX FOR BACKLIT PARKING ENTRANCE SIGN.

4 MAKE CONNECTIONS TO BACKFLOW PREVENTOR ELECTRIC HEATER. USE 3/4" CONDUIT WITH 2-#8 THHN CU. CONDRS. AND 1-#10 CU. GND. COORDINATE WITH PLUMBING PLANS FOR EXACT LOCATION AND REQUIREMENTS BEFORE DOING ANY WORK.

5 PROVIDE AND INSTALL 1" CONDUIT WITH REQUIRED FIRE ALARM WIRING FROM FIRE LINE BACKFLOW PREVENTOR TO FIRE ALARM CONTROL PANEL FOR MONITORING.COORDINATE WITH PLUMBING PLANS FOR EXACT LOCATION AND REQUIREMENTS BEFORE DOING ANY WORK.

6 MAKE CONNECTIONS TO FIRE LINE BACKFLOW PREVENTOR ELECTRIC HEATER. USE 3/4" CONDUIT WITH 2-#8 THHN CU. CONDRS. AND 1-#10 CU. GND. COORDINATE WITH PLUMBING PLANS FOR EXACT LOCATION AND REQUIREMENTS BEFORE DOING ANY WORK.

7 PROVIDE AND INSTALL RECEPTACLE MOUNTED ON POLE. SEE DETAL 1/ES-104 ON SHEED ES-104. SEE LIGHTING SITE PLAN FOR EXACT POLE LOCATIONS.

8 PROVIDE AND INSTALL SWITCH ON POLE WITH CIRCUIT NOTED FOR POWER TO BUS DISPLAY (BUS DISPLAY PROVIDED BY OTHERS). SEE DETAIL 1/ES-104 ON SHEET ES-104. COORDINATE WITH OWNER FOR EXACT LOCATIONS AND REQUIREMENTS BEFORE DOING ANY WORK.

9 PROPOSED LOCATION OF EPECo PADMOUNT TRNSFORMER. COORDINATE WITH EPECo AS SOON AS CONTRACT IS LET FOR NEW SERVICE.

10 PROPOSED LOCATION OF ELECTRICAL SERVICE, SEE RISER DIAGRAM ON SHEET E-603.

11 PROPOSED LOCATION OF SECUNDARY ENCLOSURE. SEE ELECTRICAL RISER DIAGRAM ON SHEET E-603.

FELIX M. PADILLA 56294 REGISTERED PROFESSIONAL ENGINEER STATE OF TEXAS 2/4/16

ALPHA ENGINEERING, INC.
ENGINEERING CONSULTANTS
1818 E. RIO GRANDE • EL PASO, TEXAS 79902
TEL. (915) 838-9900 • FAX. (915) 838-9909
REGISTRATION # F005236

2-4-2016

REFERENCES — BENCHMARKS

REVISIONS	DATE	BY

ARCHITECTS SEAL

SCALE
HOR: SHOWN
VER: SHOWN

DATE 11/2015
DES.CONSBY Enrique
DRAWN BY Adan
CHKD BY Felix
APPD BY Approve

PROJECT NAME
NORTHGATE TRANSFER CENTER
EL PASO, TEXAS.

CITY OF EL PASO
CAPITAL IMPROVEMENT DEPARTMENT

SHEET TITLE
POWER SITE PLAN

SHEET
ES-102

2 ENLARGED GROUND BOX PLAN
3/32" = 1'-0"

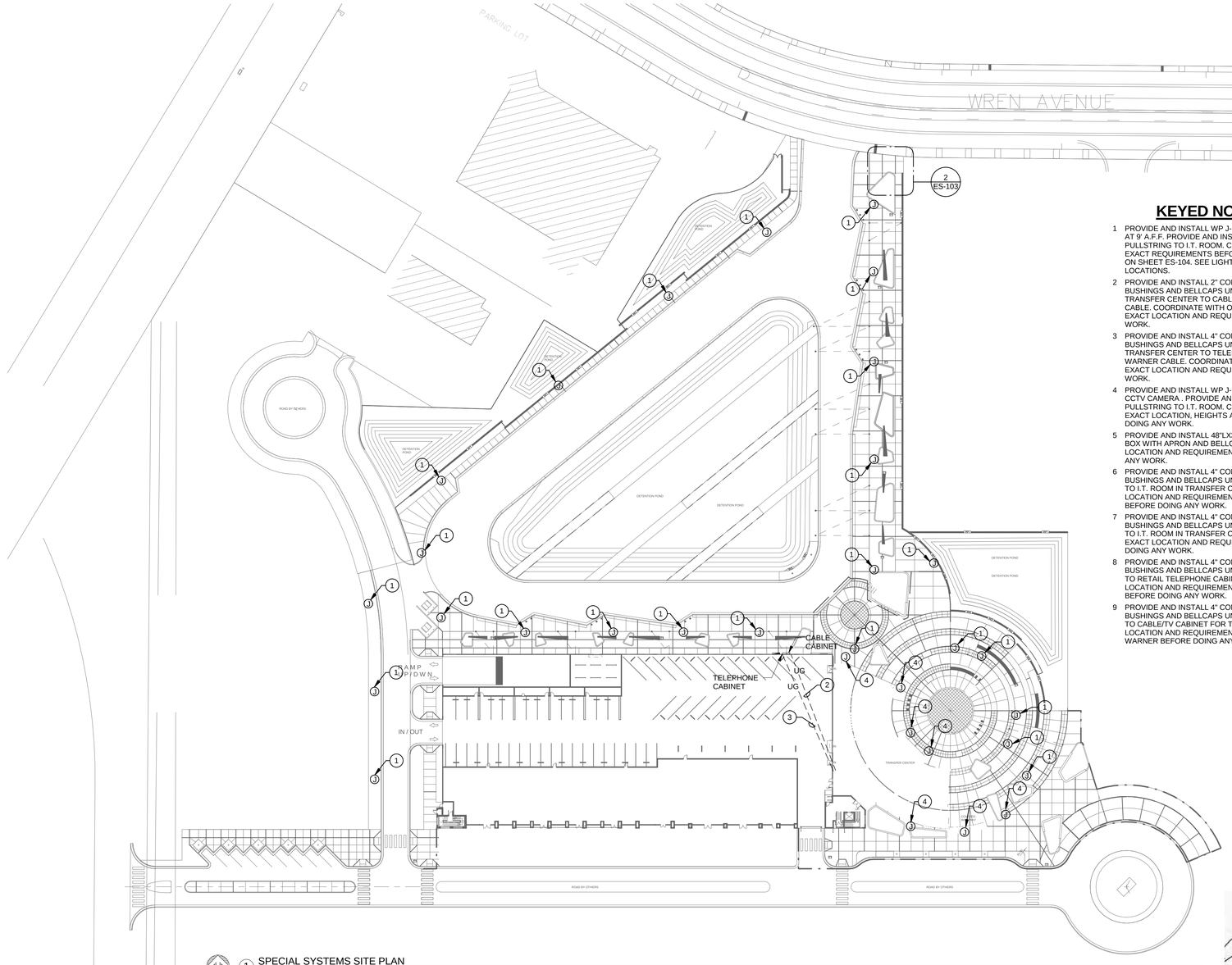

1 SPECIAL SYSTEMS SITE PLAN
1" = 50'-0"

KEYED NOTES ES-103

1 PROVIDE AND INSTALL WP J-BOX ON POLE FOR CCTV CAMERA AT 9' A.F.F. PROVIDE AND INSTALL 3/4" CONDUIT WITH PULLSTRING TO I.T. ROOM. COORDINATE WITH OWNER FOR EXACT REQUIREMENTS BEFORE DOING ANY WORK. SEE DETAIL ON SHEET ES-104. SEE LIGHTING SITE PLAN FOR EXACT POLE LOCATIONS.

2 PROVIDE AND INSTALL 2" CONDUIT WITH PULLSTRING, BUSHINGS AND BELLCAPS UNDERGROUND FROM I.T. ROOM IN TRANSFER CENTER TO CABLE/TV CABINET FOR TIME WARNER CABLE. COORDINATE WITH OWNER AND TIME WARNER FOR EXACT LOCATION AND REQUIREMENTS BEFORE DOING ANY WORK.

3 PROVIDE AND INSTALL 4" CONDUIT WITH PULLSTRING, BUSHINGS AND BELLCAPS UNDERGROUND FROM I.T. ROOM IN TRANSFER CENTER TO TELEPHONE CABINET FOR TIME WARNER CABLE. COORDINATE WITH OWNER AND AT&T FOR EXACT LOCATION AND REQUIREMENTS BEFORE DOING ANY WORK.

4 PROVIDE AND INSTALL WP J-BOX ON TRANSFER CENTER FOR CCTV CAMERA . PROVIDE AND INSTALL 3/4" CONDUIT WITH PULLSTRING TO I.T. ROOM. COORDINATE WITH OWNER FOR EXACT LOCATION, HEIGHTS AND REQUIREMENTS BEFORE DOING ANY WORK.

5 PROVIDE AND INSTALL 48"LX30"WX48" DEEP, TYPE I GROUND BOX WITH APRON AND BELLCAPS (SEAL). VERIFY EXACT LOCATION AND REQUIREMENTS WITH OWNER BEFORE DOING ANY WORK.

6 PROVIDE AND INSTALL 4" CONDUIT WITH PULLSTRING, BUSHINGS AND BELLCAPS UNDERGROUND FROM GROUND BOX TO I.T. ROOM IN TRANSFER CENTER FOR AT&T. VERIFY EXACT LOCATION AND REQUIREMENTS WITH OWNER AND AT&T BEFORE DOING ANY WORK.

7 PROVIDE AND INSTALL 4" CONDUIT WITH PULLSTRING, BUSHINGS AND BELLCAPS UNDERGROUND FROM GROUND BOX TO I.T. ROOM IN TRANSFER CENTER FOR FIBER OPTIC. VERIFY EXACT LOCATION AND REQUIREMENTS WITH OWNER BEFORE DOING ANY WORK.

8 PROVIDE AND INSTALL 4" CONDUIT WITH PULLSTRING, BUSHINGS AND BELLCAPS UNDERGROUND FROM GROUND BOX TO RETAIL TELEPHONE CABINET FOR AT&T. VERIFY EXACT LOCATION AND REQUIREMENTS WITH OWNER AND AT&T BEFORE DOING ANY WORK.

9 PROVIDE AND INSTALL 4" CONDUIT WITH PULLSTRING, BUSHINGS AND BELLCAPS UNDERGROUND FROM GROUND BOX TO CABLE/TV CABINET FOR TIME WARNER. VERIFY EXACT LOCATION AND REQUIREMENTS WITH OWNER AND TIME WARNER BEFORE DOING ANY WORK.

ALPHA ENGINEERING, INC.
ENGINEERING CONSULTANTS
1818 E. RIO GRANDE • EL PASO, TEXAS 79902
TEL. (915) 838-9900 • FAX. (915) 838-9909
REGISTRATION # F005236

2-4-2016

REFERENCES — BENCHMARKS

DATE	REVISIONS	BY

ARCHITECTS SEAL

SCALE
HOR: SHOWN
VER: SHOWN

DATE 11/2015
DES.CONSBY Designer
DRAWN BY Author
CHKD BY Approver
APPD BY Approver

PROJECT NAME
NORTHGATE TRANSFER CENTER
EL PASO, TEXAS.

CITY OF EL PASO
CAPITAL IMPROVEMENT DEPARTMENT

SHEET TITLE
SPECIAL SYSTEMS SITE PLAN

SHEET
ES-103

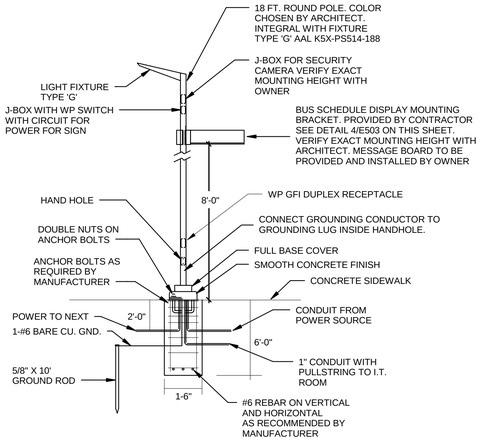

1 ES-104 FIXTURE TYPE 'AA1' POLE DETAIL

NTS

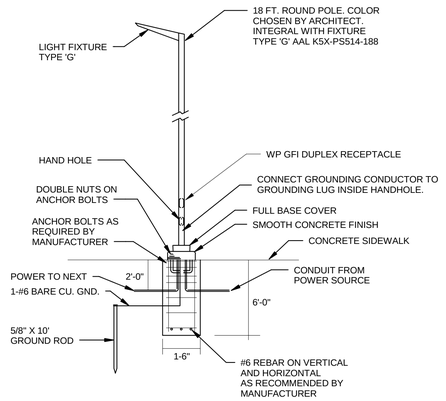

2 ES-104 FIXTURE TYPE 'AA' POLE DETAIL W/OUT CAMERA

NTS

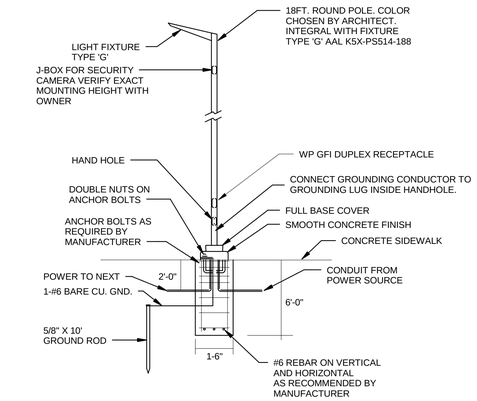

3 ES-104 FIXTURE TYPE 'AA' POLE DETAIL WITH CAMERA

NTS

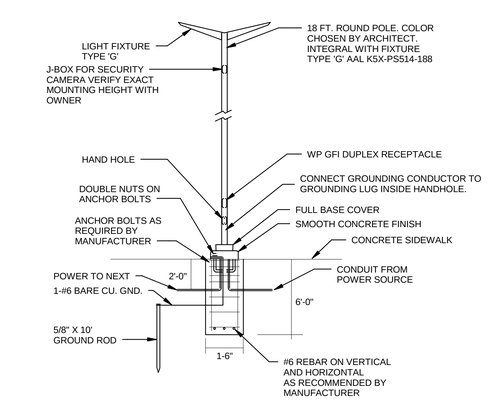

4 ES-104 FIXTURE TYPE 'AA2' POLE DETAIL WITH CAMERA

NTS

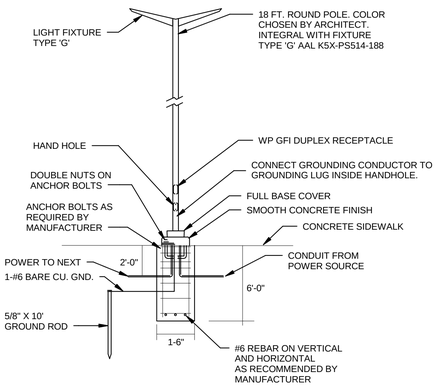

5 ES-104 FIXTURE TYPE 'AA2' POLE DETAIL W/OUT CAMERA

NTS

SIGN MOUNT:

SIGN MOUNT SHALL BE ALL ALUMINUM CONSTRUCTION CONSISTING OF A CLAMP ON L-SHAPED PLATFORM WITH DECORATIVE SCROLL TO MOUNT SIGN BY OTHERS. MOUNT TO BE AAL SIGN HOLDER WITH 2-PIECE CLAMP 09A-1897.

FINISH:

SIGN MOUNT SHALL BE FURNISHED WITH A BLACK POWDER COAT FINISH.

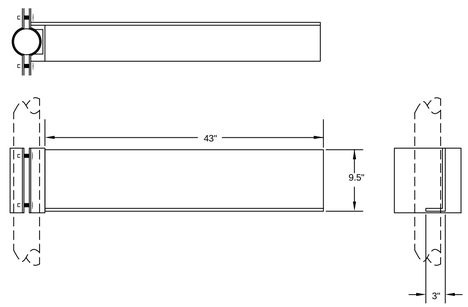

6 ES-104 BUS SCHEDULE MOUNTING BRACKET

NTS

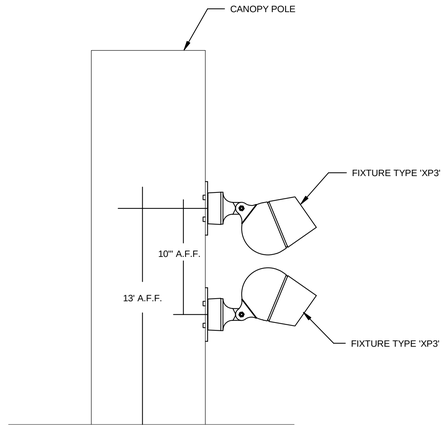

7 ES-104 FIXTURE TYPE 'XP3' MOUNTING DETAIL

NTS

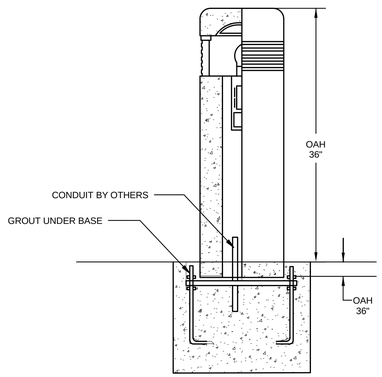

8 ES-104 BOLLARD MOUNTING DETAIL

NTS

REFERENCES – BENCHMARKS

ARCHITECTS SEAL

REVISIONS	DATE	BY

SCALE
HOR: SHOWN
VER: SHOWN

DATE 11/20/15
DESIGNED BY Designer
DRAWN BY Author
CHKD BY Approver
APPD BY Approver

PROJECT NAME
NORTHGATE TRANSFER CENTER
EL PASO, TEXAS.

CITY OF EL PASO
CAPITAL IMPROVEMENT DEPARTMENT

THE CITY OF EL PASO TEXAS

SHEET TITLE
SITE PLAN DETAILS

SHEET
ES-104

THE STATE OF TEXAS
FELIX M. PADILLA
56294
REGISTERED
PROFESSIONAL ENGINEER
2/4/16

ALPHA ENGINEERING, INC.
ENGINEERING CONSULTANTS
1818 E. RIO GRANDE • EL PASO, TEXAS 79902
TEL. (915) 838-9900 • FAX. (915) 838-9909
REGISTRATION # F005236

2-4-2016