EPIA Checked Baggage Inspection System

Solicitation No. 2016-963

City of El Paso
Purchasing and Strategic Sourcing Department
300 N. Campbell
El Paso, Texas

VOLUME 1 OF 3

All bids must be submitted

in a sealed envelope

BEFORE 2:00 P.M.

on the Bid Opening date to

CITY HALL

300 N. Campbell, El Paso, TX 79901

1st FLOOR

PURCHASING & STRATEGIC SOURCING DIVISION

CITY OF EL PASO
NOTICE

EPIA Checked Baggage Inspection System
Solicitation No. 2016-963

A NON-MANDATORY PRE-BID CONFERENCE WILL BE HELD

On June 15, 2016 at 9:30 a.m.

Location: **6701 Convair – EPIA Board Room, El Paso TX**

EVENTS	DATE AND/OR TIME
Release Bids	6/7/2016
Last Day for Bidders to Submit Written Questions	6/22/2016
Bid Due Date	7/6/2016

Answers furnished during the conference will not be official until verified in writing by the issuing office.
You may address procurement questions to the *Procurement Analyst*, *Claudia Garcia*, in writing at *garciaca2@elpasotexas.gov*. Any other communications, oral or in writing, with any person are strictly prohibited.

Attendance at the project pre-bid conference is optional for all bidders intending to submit a bid for the units and services.

Instructions to bidders: Free bid packets (Specifications, Plans and all required forms) are available online. Bidders must register in order to download bid packets from the Purchasing & Strategic Sourcing Department Website:

http://www.elpasotexas.gov/purchasing/ep-invitations.asp

Bidders must acknowledge the receipt of any and all amendments on the solicitation response. It is the bidder's responsibility to ensure that they have all pertinent information regarding solicitations, including all amendments prior to submitting their offer. Failure to acknowledge may be cause for your bid to be considered non-responsive.

TABLE OF CONTENTS

FAA FUNDED PROJECT / COMPETITIVE SEALED PROPOSAL

EPIA Checked Baggage Inspection System

SOLICITATION NO. 2016-963

VOLUME 1	SECTION	NO. PAGES
INVITATION TO BID	I-A	4
SCOPE OF WORK	I-A-a	1
INFORMATION FOR BIDDERS	I-B	34
COMPETITIVE SEALED PROPOSAL PROCUREMENT CRITERIA	I-C	8
PROPOSAL	I-C-a	2
CERTIFICATION OF NONCOLLUSION	I-C-b	1
BID BOND	I-D	3
SUPPLEMENTAL BIDDER INFORMATION	I-E	16
FEDERAL CERTIFICATIONS	I-F	9
FAA CERTIFICATIONS	I-F-a	5
VOLUME 2		
APPLICABLE WAGE RATES	I-G	14
QUALIFICATION AND FINANCIAL DISCLOSURE STATEMENT	I-H	5
CONTRACT	II-A	2
PERFORMANCE BOND	II-B	2
PAYMENT BOND	II-C	2
AGENT RESIDENT DESIGNATION	II-D	1
INSURANCE REQUIREMENTS (Certificate to be inserted by contractor)	II-E	2
CERTIFICATE OF OWNER'S ATTORNEY	II-F	1
GENERAL CONDITIONS OF CONTRACT	III-A	56
SAFETY STANDARD AND ACCIDENT PREVENTION	III-B	1
TRENCH SAFETY SYSTEM REQUIREMENTS	III-C	4
FAA MANDATORY CONTRACT PROVISIONS	III-D	28
EQUAL EMPLOYMENT OPPORTUNITY REQUIREMENTS	IV-A	6
ANTI-KICKBACK ACT	IV-B	7
TECHNICAL SPECIFICATIONS	V	1,171

CITY OF EL PASO
INVITATION FOR BID

EPIA Checked Baggage Inspection System
Solicitation No. 2016-963

Competitive Sealed Proposals will be received by the Purchasing & Strategic Sourcing Division, City of El Paso, 300 N. Campbell, El Paso, Texas 79901 or HAND DELIVERED to the Purchasing Division at City Hall, 300 N. Campbell, 1st Floor, El Paso, Texas, before 2:00 p.m., Wednesday, July 6, 2016, publicly opened and read in City Hall, 300 N. Campbell, 1st Floor, Council Chambers, unless posted otherwise, for furnishing the City with the construction of EPIA Checked Baggage Inspection System, Proposal No. 2016-963.

The City reserves the right to accept or reject any or all bids and to waive formalities. In case of ambiguity in stating the price in the bid, the City reserves the right to consider the most advantageous construction thereof or to reject any bids. Also, the City reserves the right to accept the low bid based on the tabulation of any one, combination or all of the base bid(s), alternate bid(s) and/or, optional bid(s) based on the most advantageous project bid that is desired by the City Department involved and that the City Council in their sole judgment determines is the City's best interest and benefit.

"PLEASE NOTE THE REQUIREMENTS IN SECTION 5.24 AND 5.25 OF THE CONTRACT GENERAL CONDITIONS, APPRENTICES THAT MAY APPLY TO THIS PROJECT."

Cone of Silence: Please note requirements of the City's "Cone of Silence" Policy found in section I-B, Information for Bidders, item number 26. The Cone of Silence Policy prohibits any communication except as provided in the Policy. The Cone of Silence begins on the day the bid is advertised and terminates on the day that a recommendation of contract award is placed on the City Council agenda by the Engineering & Construction Management Department.

Please note the City's experience requirements, for award of this project, in Section I-B, Information for Bidders, item No. 6, Method of Award-Competitive Sealed Proposal.

Federal Funds: Federal funds are being used in this project and the Davis-Bacon Act, Airport & Airway Improvement Act of 1982, and Executive Order 11246 will apply. In the event that federal funds are not disbursed to the City of El Paso for this project, or that federal funds disbursed are insufficient to proceed with this Project, as determined by the City of El Paso, the City of El Paso shall have no further legal obligation in connection with this project and shall have the option to terminate this project without any legal obligation for compensation or damages to the bidder. The bidder's attention is called to the following notice provisions which apply to this proposed contract:

(1) The proposed contract is under and subject to Executive Order 11246 of September 24, 1965, and to the Equal Opportunity Clause. The Bidder's (Proposer's) attention is called to the "Equal Opportunity Clause" and the "Standard Federal Equal Employment Opportunity Construction Contract Specifications" set forth in the Specifications.

(2) The Bidder (Proposer) must supply all the information required by the bid or proposal form.

(3) The successful bidder will be required to submit a Certification of Nonsegregated Facilities prior to award of the Contract, and to notify prospective subcontractors of the requirement for such a Certification where the amount of the subcontract exceeds $10,000.00. Samples of the Certifications and Notice to Subcontractors appear in the specifications.

(4) Women will be afforded equal opportunity in all areas of employment.

However, the employment of women shall not diminish the standards or requirements for the employment of minorities.

For Contracts of $50,000 or more. A contractor having 50 or more employees, and his subcontractors having 50 or more employees and who may be awarded a subcontract of $50,000 or more, will be required to maintain an affirmative action program within 120 days of the commencement of the contract.

For contracts which may result in a bid of a million or more:

(1) Preaward Equal Opportunity Compliance Reviews. Where the bid of the apparent low responsible bidder is in the amount of $1 million or more, the bidder and his known all-tier subcontractors which will be awarded subcontracts of $1 million or more will be subject to full on-site, preaward equal opportunity compliance reviews before the award of the contract for the purpose of determining whether the bidder and his subcontractors are able to comply with the provisions of the equal opportunity clause.

(2) Compliance Reports. Within 30 days after award of this contract, the contractors shall file a compliance report (Standard Form 100) if:

(a) The contractor has not submitted a complete compliance report within 12 months preceding the date of award; and

(b) The contractor is within the definition of "employer" in Paragraphs 2e(3) of the instructions included in Standard Form 100.

(3) The Contractor shall require the subcontractor on all-tier subcontracts, irrespective of dollar amount, to file Standard Form 100 within 30 days after award of the subcontract if the above two conditions apply. Standard Form 100 will be furnished upon request.
Additional Notices to the bidder:

(a) Policy. It is the policy of the Department of Transportation (DOT) that

Disadvantaged Business Enterprises (DBEs) as defined in 49 CFR Part 23 shall have the maximum opportunity to participate in the performance of contracts financed in whole or in part with Federal Funds.

(b) The proposed contract is subject to the Buy American provision under Section 9129 of the Aviation Safety and Capacity Expansion Act of 1990. Details of such requirements are contained in the specifications.

(c) All bidders and proposers shall make good faith efforts, as defined in Appendix A of 49 CFR Part 23, Regulations of the Office of the Secretary of Transportation, to subcontract zero percent (0%) of the dollar value of the prime contract to small business concerns owned and controlled by socially and economically disadvantaged individuals (DBE). In the event that the bidder for this solicitation qualifies as a DBE, the contract goal shall be deemed to have been met.

Individuals who are rebuttably presumed to be socially and economically disadvantaged include women, Blacks, Hispanics, Native Americans, Asian-Pacific Americans and Asian-Indian Americans. The apparent successful bidder (proposer) will be required to submit information concerning the DBE's that will participate in this contract. The information will include the name and address for each DBE, a description of the work to be performed by each named firm, and the dollar value of the contract (subcontract). If the bidder fails to achieve the contract goal as stated herein, it will be required to provide documentation demonstrating that it made good faith efforts in attempting to do so. A bid that fails to meet these requirements will be considered nonresponsive.

All forms in VOLUME I must be printed, completed and submitted in a sealed envelope. It is the responsibility of the bidder to submit any forms that may have been issued by amendment.

Wage Rates: Where there are similar wage rate classifications in wage determinations, the higher wage shall be paid. The contractor shall pay not less than the wage rate as determined by the Department of Labor, Wage and Hour Division and the City of El Paso.

The bidder awarded the contract for this project will be required to enter payrolls electronically using the *LCP Tracker* payroll software that the City uses to certify payrolls and generate payroll reports. The City will provide Contractor with the software.

IMPORTANT NOTICE

NOTE: ANY CHANGES IN DUE DATE OR MATERIAL CHANGES FOR ANY RFP'S/SOLICITATIONS WILL BE POSTED ON THE SOLICITATIONS PAGE OF THE CITY OF EL PASO PURCHASING & STRATEGIC SOURCING DEPARTMENT'S WEBSITE:

http://www.elpasotexas.gov/financial_services/invitations.asp

It is the bidder's responsibility to ensure that they have all pertinent information regarding

solicitations, including all amendments prior to submitting their offer. Please check the website, even after submitting a bid, to ensure that you have all amendments as they may be posted at any time, up to and including the day of bid opening.

The City of El Paso does not provide any documents (i.e. proposal, plans, specs, etc.) in paper form (hardcopy).

Federal funds: Federal funds are anticipated to be used in this project and the rules and regulations of the State of Texas and the Federal Transportation Administration of the United States Department of Transportation apply. In the event that federal funds are not disbursed to the City of El Paso for this project, or that federal funds disbursed are insufficient to proceed with this Project, as determined by the City of El Paso, the City of El Paso shall have no further legal obligations for compensation or damages to the bidder. The City has the option to terminate this project.

All contractors

The following forms are mandatory and must be submitted prior to award:

1. Federal Certifications, Section I-F-1
2. Federal Aviation Administration (FAA) Certifications, Section I-F-a

Note: Special attention is called to the "Buy America Certificate", page 1-F-a-4.

The estimated project budget is in the range of $25,000,000.00 – $30,000,000,000.00.

Bid Security: Each bid must be accompanied by a bid bond naming the City of El Paso as obligee and duly executed by the Bidder as principal and having as surety thereon a surety company approved by the Owner, in the amount of five percent (5%) of the total bid price (including base bid(s), option(s) and alternate(s). ALL BID BOND FORMS MUST CONTAIN ORIGINAL SIGNATURES (S).

The successful bidder must furnish a performance and payment bond as required by law, and the terms of this contract.

Bruce D. Collins, CPPO
Purchasing Director
Purchasing & Strategic Sourcing Department
City of El Paso

Advertised in the EL PASO TIMES Tuesday, June 7, 2016 and Tuesday, June 14, 2016.

EPIA Checked Baggage Inspection System

SOLICITATION No. 2016-963

SCOPE OF WORK

Base Bid:

The Work of the Project is defined by the Contract Documents and consists of the following:

The work includes a new addition of approximately 32,000 square feet to house a new baggage handling system, demolition of existing pavement, rerouting of underground utilities in the area of the new addition, concrete foundations, new concrete pavement, precast concrete exterior wall panels, structural steel framing, metal deck, roof system, interior and exterior finishes, plumbing, HVAC system, electrical power and lighting, fire alarm, special systems infrastructure, temporary baggage handling system, and a new baggage handling system.

The work also includes interior remodel and renovation of select office areas behind the Terminal Building's ticket airline counters.

Prior to commencement of any work, the Contractor shall submit and obtain approval from City of El Paso, Engineering & Construction Management Department, for the Sequence of Construction, Schedule of Work, and Haul/Waste Route to an approved disposal site. Traffic Control Plan must be submitted and approved, if applicable. Contractor shall provide written approved documentation from the owner or operator of the waste site.

The description of this scope of work as shown above is only a general overview of this project. Contractor shall refer to the project plans and specifications for further information.

END SCOPE OF WORK

INFORMATION FOR OFFERORS

COMPETITIVE SEALED PROPOSALS

1. RECEIPT AND OPENING OF PROPOSALS

The CITY OF EL PASO, hereinafter called the "Owner", invites proposals on the attached form hereto, all blanks of which must be appropriately filled in. Proposals will be received by the Owner at the office of the Purchasing & Strategic Sourcing Department, as specified in the "Invitation to Bid", page I-A-1, and then publicly opened and read aloud at City Hall, 300 N. Campbell, 1st Floor, Council Chambers unless otherwise posted. The envelopes containing the proposals must be sealed and addressed to: Purchasing & Strategic Sourcing Department, City Hall, 300 N. Campbell, 1st Floor, El Paso, Texas 79901 or delivered to the Purchasing & Strategic Sourcing Department, City Hall, 300 N. Campbell, 1st Floor, El Paso, Texas and designated as a proposal for:

EPIA Checked Baggage Inspection System

Solicitation No. 2016-963

N O T I C E

The Owner reserves the right to accept or reject any or all proposals and, to the extent permitted by law, to waive informalities or irregularities that are not material, such as failure to submit sufficient offer copies, literature or similar attachments or business affiliation information. All proposals are to be prepared and submitted in accordance with the provisions of the Information for Offerors, and the City reserves the right to consider any proposal, therefore, subject to rejection as being nonresponsive to the proposal request. The Owner may, in its sole discretion, determine that any non-material defect in the proposal is harmless if such defect relates to an element that is not material, mandatory or essential to the responsiveness of the proposal, and the Owner may accept the proposal in spite of the existence of a harmless non-material defect. Any proposal received after the time and date specified shall not be considered. No Offeror may withdraw a proposal within ninety (90) consecutive calendar days after the actual date of the opening thereof.

EXPIRATION NOTICE

The offeror agrees, to furnish all items [supplies or services] at the prices offered, and delivered at the designated point or points, within the time set forth in the SCHEDULE, if this offer is accepted within **NINETY [90]** consecutive days from the date set for the receipt of offers. All offers shall expire on the **90th** day after the offers are open unless the City of El Paso requests an extension of the offers in writing and the offeror agrees to extend in writing.

2. PREPARATION OF PROPOSALS

A. Format and Structure

All submissions must follow the submission guidelines below. The City reserves the

right to reject proposals not in compliance with these requirements.

1. Use fonts no smaller than Times New Roman, 10 point. Maximum length of the entire evaluation criteria should not exceed 30 pages.

2. All pages must be numbered.

3. Address qualifications criteria in the order presented Selection Criteria.

4. Major sections must have page breaks between them and the following sections.

5. Table of Contents – Identify the page location of each major section.

6. Letter of Introduction (maximum 2 pages) – Provide brief narrative of background and general qualifications of the Offeror, including any experience with services/products similar in scope and/or size to those requested in this CSP.

7. Appendices containing resumes and licenses for proposed key project staff and professional licenses, and a statement of exceptions to the proposed DBIA standard form of agreement (Documents 520, 525, and 535) terms and conditions.

B. Copies Required:

Proposal must be submitted in original form with five (5) additional copies and one electronic copy (flash drive), all contained in a single submission. All responses must be submitted in original form with:

a. Five (5) bound original copies of your proposal
b. Electronic – one (1) electronic copy on flash drive. Format of the electronic copy must be either .doc (readable by Microsoft Word 2003 or 2007) or .pdf (readable by Adobe reader 9). The content of the electronic file shall be exact submission of the hard copies of the proposals. (i.e., documents should bear signatures, where applicable and be filled out entirely). In the event of a discrepancy/conflict between the hard copy and electronic copy, hard copy will govern.

C. Additional Requirements:

EACH PROPOSAL MUST BE SUBMITTED ON THE PRESCRIBED FORM AND all blank spaces for prices must be entered in ink or typewritten**. FAILURE TO FILL IN ALL BLANK SPACES SHALL CAUSE THE PROPOSAL TO BE DEEMED NOT RESPONSIVE AND PROPOSAL WILL NOT BE CONSIDERED.** For unit price proposals line item entries shall prevail over sum total entries. When discrepancies exist between unit prices and corresponding extended prices, unit prices shall prevail. The predetermined percentage allowable for mobilization shall prevail over the total amount entered for mobilization. When discrepancies exist between the predetermined percentage allowable for mobilization and the total amount entered for mobilization, the predetermined percentage allowable shall prevail.

Each submission of proposals must be submitted in a sealed envelope/box bearing on the outside the name of the Offeror, his/her address, and the name of the project for which the proposals are being submitted. If forwarded by mail, the sealed envelope

containing the proposals must be enclosed in another envelope addressed as specified in Paragraph 1.

When applicable, Federal Certifications **must** be completed on any Federally Funded Projects and submitted with proposal by general contractor.

EACH BID MUST BE ACCOMPANIED BY THE "BUY AMERICA" CERTIFICATION. FAILURE TO SUBMIT THE REQUIRED "BUY AMERICA" CERTIFICATION IN THE SEALED BID PROPOSAL WOULD BE CAUSE TO DECLARE THE BIDDER NON-RESPONSIVE.

*** N O T I C E ***
STATE SALES TAX

The successful Offeror may be required to pay state sales tax for the purchase, rental or lease of tools, machinery and equipment used in the performance of the awarded contract and for materials purchased which are not incorporated into the completed project. It is the obligation of the Offeror to ascertain the amount of state sales tax to be paid under Chapter 151 of the Texas Tax Code and to include this amount in his/her proposal submitted to the Owner. For further information, the Offeror may wish to contact the office of the Texas Comptroller of Public Accounts at 1-800-252-5555.

3. SIGNATURE FORMALITIES

THE FULL COMPANY NAME OF THE OFFEROR SHOULD BE NOTED ON EVERY PAGE OF THE PROPOSAL AND SHALL BE SIGNED WITH THE OFFEROR'S OFFICIAL SIGNATURE. The name of the signing party or parties should be typewritten or printed under all signatures on the signature page of the proposal.

The Offeror should observe the following additional formalities specific to his/her form or ownership:

a. If a corporation, a Corporate Certificate must be completed by the Secretary or by another officer if the proposal is signed by the Secretary. In lieu of the certificate, there may be attached to the proposal, copies of as much of the records of the corporation as will show the official character and authority of the officers signing, duly certified by the Secretary or Assistant Secretary under the corporate seal to be true copies.

b. If the Offeror should be operating as a partnership, each partner should sign the proposal. If the proposal is not signed by each partner, there should be attached to the proposal a duly authenticated power of attorney evidencing the signer's authority to sign such proposal for and in behalf of the partnership.

c. If the Offeror is an individual, the trade name (if the Offeror be operating under an assumed name) should be indicated in the proposal and the proposal should be signed by such individual. If signed by one other than the Offeror, there should be attached to the proposal a duly authenticated power of attorney evidencing the signer's authority to execute such proposal for and in behalf of the Offeror.

4. SUBCONTRACTS

The Offeror is specifically advised that any person, firm, or other party to whom it is proposed to award a subcontract under this contract must meet the following requirement(s) BEFORE the contract is awarded:

a) Be acceptable to the Owner after verification of the current eligibility status.
b) Submit certification by proposed subcontractors regarding Labor Practices Certification. Approval of the proposed subcontract award cannot be given by the Owner unless and until the proposed subcontractor has submitted the certifications and/or other evidence showing that it has fully complied with any reporting requirements to which it is or was subject. Although the Bidder is not required to attach such certifications by proposed subcontractors to his/her bid, the bidder is hereby advised of this requirement so that appropriate action can be taken to prevent subsequent delay in subcontract awards.

5. USE OF PURCHASING AND STRATEGIC SOURCING DEPARTMENT EQUIPMENT

Offerors are forbidden to use any telephones or equipment, i.e., desks, calculators, etc., in the Purchasing and Strategic Sourcing Department as a whole prior to bid openings.

6. METHOD OF AWARD – COMPETITIVE SEALED PROPOSAL

The Owner shall receive, publicly open, and read aloud the names of the offerors and any monetary proposals made by the offerors.

No later than the 45th day after the date on which the proposals are opened, the Owner shall evaluate and rank each proposal submitted in relation to the selection criteria set out in this request for proposal in section I-C.

The Owner shall select the offeror that submits the proposal that offers the best value for the Owner based on the selection criteria in the request for proposal and the weighted value for those criteria in the request for proposal and the owner's ranking evaluation.

The Owner shall first attempt to negotiate a contract with the selected offeror. The Owner and its architect or engineer may discuss with the selected offeror options for a scope or time modification and any price change associated with the modification.

If the Owner is unable to negotiate a satisfactory contract with the selected offeror, the Owner shall, formally and in writing, end negotiations with that offeror and proceed to the next offeror in the order of the selection ranking until a contract is reached or all proposals are rejected.

CONDITIONAL PROPOSALS WILL NOT BE ACCEPTED

The submission or attachment of company "Quotation Forms" or any other documents containing alternative terms and / or conditions is not acceptable and may result in your bid being deemed non-responsive. Unauthorized additions, serious omissions, bids that do not contain a unit price where required or irregularities of any kind which make the bid incomplete, indefinite, or otherwise ambiguous are not acceptable and may result in your bid being deemed non-responsive.

6A. MINIMUM SPECIFICATIONS: The specifications listed are to be interpreted as meaning the minimum required by the City. Offeror commits to provide goods/services that are consistent with the City's specifications in every regard unless an exception is clearly noted. The City may accept a bid subject to an exception if, in the sole judgment of the City, the bid meets or exceeds the City's specifications. If the goods/services offered do not meet or exceed the City's specifications because of the exception, the City will consider the bid non-responsive.

SAFETY AND CAPACITY INSPECTIONS: The City reserves the right to conduct safety and capacity inspections of facilities, equipment, and staff prior to the award and periodically during the contract term. If, in the sole discretion of the City, a vendor is deemed to have inadequate safety equipment and/or procedures, has a track record of safety violations, or has insufficient capacity to honor the contract requirements then the vendor may be declared non-responsible.

EQUIPMENT, PERSONNEL AND RESPONSIBILITY DETERMINATION: Upon request, the Contractor must be willing to identify and provide the following as appropriate, 1) the primary equipment it intends to use in the execution of this contract to include quantity, brand, type, and model year; 2) the number of personnel it employs that can fulfill the contract requirements and; 3) responsibility determination (financial and technical - see end of Section B for specific information).

CONTRACTING OFFICER (CO) AND CONTRACTING OFFICER'S REPRESENTATIVE (COR)
Acceptance of services will be the responsibility of the Contracting Officer (CO), who also serves as City of Paso Purchasing Director, or designee. The Contracting Officer is responsible for final approval and acceptance of all services rendered. Upon contract execution, the Contracting Officer will delegate a Contracting Officer's Representative (COR) and Department Contracts Administrator(s) (DCAs) to assist with the administration of the resultant Contract.

CONTRACT PERFORMANCE
The Respondent shall be responsible for the completion of all work set out in the Contract and task orders. All work is subject to inspection, evaluation, and acceptance by City of El Paso. City of El Paso may employ all reasonable means to ensure that the work is progressing and being performed in compliance with the Contract.

MATERIALS AND FABRICATION: Details of construction and materials, where not otherwise specified, are left to the discretion of the manufacturer, provided that only materials and workmanship of the highest quality are to be used, and best commercial practice is adhered to in the fabrication of the unit(s). Except as otherwise specified herein, the manufacturer shall be solely responsible for design and construction of the product to meet the stated performance criteria.

REFERENCE TO BRAND NAMES: Any manufacturer names, trade names, brand names, or catalog numbers used in these specifications are for the purpose of describing and establishing minimum requirements or level of quality and design required, and are in no way intended to prohibit the bidding of other manufacturers' item of equal material and quality.

MATERIALS: The items furnished shall be new, unused or the latest model in production as offered to commercial trade and shall be of the highest quality as to materials and workmanship. Manufacturer furnishing these items shall be experienced in the design

and construction of such items and shall furnish evidence of having supplied similar items which have been in successful operation. The bidder shall be an established supplier of the items bid.

7. TIME OF AWARD

Each Contract shall be deemed as having been awarded when formal written Notice of Award shall have been duly served upon the Offeror to whom the Owner has awarded the contract by some officer or agent of the Owner duly authorized to give such notice. Upon receipt of such written notice, the Contractor will proceed to verify the availability of the required materials or equipment needed to perform the project and submit his shop drawings to the Capital Improvement Department or Owner-designated representative within (21) twenty-one calendar days from issuance of Notice to Proceed with Submittal Phase. If problems are encountered in the availability of materials or equipment, the Owner will be notified in writing immediately prior to scheduling of the Preconstruction Conference.

8. BID SECURITY

Each bid must be accompanied by an original Bid Bond prepared in the form of a Bid Bond attached hereto, naming the City of El Paso Texas as obligee and duly executed by the Offeror as principal and, having as surety thereon a surety company approved by the Owner, in the amount of five percent (5%) of the TOTAL proposal price, including the base bid(s), option(s) and alternate(s), (cash, personal checks, company checks, cashier's checks or any security other than a bid bond **will not be accepted**). The surety shall meet the requirements found in the General Conditions 5.13.2.2.1 and 5.13.2.4. Each Bid Bond submitted must be an original Bid Bond with original signatures of the principal and surety. The surety company providing the Bid Bond shall designate an agent resident who resides within the County of El Paso to whom any requisite notices may be delivered and with whom service of process may be rendered in matters arising out of the surety ship. Such bid bonds will be returned promptly after the Owner and the accepted Offeror have executed the Contract, or, if no award has been made, within ninety (90) consecutive calendar days after the date of the opening of proposals, upon demand of the Offeror at any time thereafter, so long as he/she has not been notified of the acceptance of his/her proposal.

9. LIQUIDATED DAMAGES FOR FAILURE TO ENTER INTO CONTRACT

In the event the successful Offeror fails or refuses to execute and deliver the Contract, insurance certificates, bonds and resident agent designation as required herein within fourteen (14) consecutive calendar days after successful Offeror has received notice of award, the Owner may take the necessary steps to terminate the award and seek forfeiture of successful Offeror's bid bond as liquidated damages for such failure or refusal to enter into a contract.

10. BONDING REQUIREMENTS

In accordance with Chapter 2253, Texas Government Code, the City of El Paso requires the following for all public works contracts:

a. A Performance Bond for all public works contracts in excess of $25,000. The performance bond shall be for one hundred percent (100%) of the contract price

and conditioned on the faithful performance of work in accordance with the plans, specifications, and contract documents.

b. A Payment Bond for all public works contracts in excess of $25,000. The payment bond shall be for one hundred percent (100%) of the contract price for the protection and use of the payment bond beneficiaries who have a direct contractual relationship with the prime contractor or subcontractor to supply public work labor or material.

In accordance with Section 3503.003 of the TEXAS INSURANCE CODE, the surety company providing the Payment Bond shall designate an agent who resides within the County of El Paso to whom any required notices may be delivered and on whom process may be served in matters arising out of surety ship.

In accordance with Section 3503.004 of the TEXAS INSURANCE CODE, if a Performance or Payment Bond is an amount in excess of ten percent (10%) of the surety's capital and surplus, the City of El Paso will require, as a condition to accepting the bond(s), a written certification from the surety that the surety has reinsured the portion of the risk that exceeds ten percent (10%) of the surety's capital and surplus with one or more reinsurers who are duly authorized, accredited or trusted to do business in the State of Texas. If any portion of the surety's obligation is reinsured, the amount reinsured may not exceed 10% of the reinsurer's capital and surplus.

The required bonds shall be executed only by a surety company that is authorized to write surety bonds in Texas. If the amount of the bond exceeds $100,000, the surety company must also: (a) hold a certificate of authority from the United States secretary of the treasury to qualify as a surety on obligations permitted or required under federal law; or (b) have obtained reinsurance for any liability in excess of $100,000 from a reinsurer that: (1) is an authorized reinsurer in this state; and (2) holds a certificate of authority from the United States secretary of the treasury to qualify as a surety or reinsurer on obligations permitted or required under federal law. To determine whether the surety on the bond or the reinsurer holds a certificate of authority from the United States secretary of the treasury, a party may conclusively rely on the list published in the Federal Register by the United States Department of the Treasury, covering the date on which the bond was executed, of the companies holding certificates of authority as acceptable sureties on federal bonds and as acceptable reinsuring companies.

Note: Dun & Bradstreet has the capability to obtain information on past performance on specific contractors. Accordingly, the City may require Offerors to provide a copy of a recent past performance report prepared by Dun & Bradstreet. The Past Performance Evaluation Report provided to the Offeror by Dun & Bradstreet shall be submitted, not later than 14 calendar days after request by the City. The Offeror shall be responsible for the cost of Dun & Bradstreet's preparation of the report.

11. TIME OF COMPLETION AND LIQUIDATED DAMAGES

Bidder agrees to commence work on a date to be specified in a written "Notice to Proceed" issued by the Owner. The Contract Time shall begin on the date to commence work specified in the Notice to Proceed and shall run for **six hundred (600)** additional **CONSECUTIVE CALENDAR DAYS** thereafter. Bidder shall substantially complete the project within **five hundred seventy (570)** CONSECUTIVE CALENDAR DAYS after the date to commence work in the Notice to Proceed. Bidder agrees to pay, as liquidated damages, the sum of **two thousand ten dollars and zero cents ($2,010.00)** for each consecutive calendar day after the date of Substantial Completion, as hereinafter

provided in the General Conditions. Bidder further agrees to pay as liquidated damages the sum of **one thousand seven hundred sixty dollars and zero cents ($1,760.00)** for each consecutive calendar day after the expiration of the Contract Time for Remaining Work, as provided in Paragraph 6.8.3.1 of the General Conditions. The unit price quantities of this contract are estimated.

12. CONDITIONS OF WORK

Each Offeror must inform himself/herself fully of the conditions relating to the construction of the project and the employment of labor thereon. Failure to do so will not relieve a successful Offeror of his/her obligation to furnish all material and labor necessary to carry out the provisions of his/her contract. Insofar as possible, the contractor, in carrying out his/her work, must employ such methods or means as will not cause any interruption of, or interference with, the work of any other contractor.

13. OBLIGATION OF OFFEROR

A the time of the opening of proposals, each Offeror will be presumed to have inspected the site and to have read and to be thoroughly familiar with the plans and contract documents, including all addenda. The failure or omissions of any Offeror to examine any form, instrument, General Conditions, or other document shall in no way relieve any Offeror from any obligation in respect of his/her proposal.

The undersigned Offeror represents to the City and to the other Offerors that his/her proposal, and the estimates on which it is based, has been carefully checked and contains no errors, and nothing has been omitted or overlooked in determining the amount proposal.

14. ADDENDA AND INTERPRETATIONS

No interpretation of the meaning of plans, specifications, or other pre-proposal documents will be made to any Offeror orally. Every request for such interpretation should be in writing addressed to the Purchasing and Strategic Sourcing Department, City of El Paso, 300 N. Campbell, 1st Floor, El Paso, Texas 79901. To be given consideration, the request for interpretation must be received at least seven (7) consecutive calendar days prior to the date fixed for the opening of proposals. Please check the website, even after submitting a proposal to ensure that you have all amendments as they may be posted at any time, up to and including the day of bid opening. Failure of any Offeror to acknowledge any such addendum or interpretation shall not relieve such Offeror from any obligation under his/her proposal as submitted. All addenda so issued shall become part of the contract documents and must be acknowledged on the proposal form.

15. POWER OF ATTORNEY

Attorneys-in-Fact who sign bid bonds or contract bonds must file with each bond a certified and effectively dated copy of their power of attorney.

16. NOTICE OF SPECIAL CONDITIONS

Attention is particularly called to those parts of the contract documents and specifications that deal with the following:

a. Inspection and testing of materials.

b. Insurance requirements.
c. Wage rates.

17. DISADVANTAGED BUSINESS ENTERPRISE (DBE) REQUIREMENT

The offeror's attention is particularly called to the Disadvantaged Business Enterprise (DBE) Program Requirements governing this contract. Any offerror who is not a DBE must make a good faith effort to award at least **0%** of the dollar value of the contract to DBE's. In this regard, the offeror must complete and submit the certifications contained on page I-E-2 and pages I-F-a-1 through I-F-a-3 (FAA Certificaitons) regarding the DBE program.

18. LAWS AND REGULATIONS APPLICABLE

The Offeror's attention is directed to the fact that all applicable federal laws, including but not limited to, the Immigration Reform and Control Act of 1986, state laws, municipal ordinances and the rules and regulations of all authorities having jurisdiction over construction of the project shall apply to the contract throughout and they will be deemed to be included in the contract the same as though herein written out in full.

The successful Offeror is required to provide to the Purchasing and Strategic Sourcing Department all documents necessary to fulfill local, state and federal regulations governing this project, prior to the preconstruction conference. A Notice to Proceed with the contract **will not** be issued until the appropriate City departments have received all submittals, and any such delays by the Contractor's failure to submit such requirements will not be counted against the time that the proposal must remain valid. Appropriate forms and technical assistance will be provided to the successful Offeror by the Purchasing and Strategic Sourcing Department and Owner Designee to fulfill these requirements. For information or assistance, call Purchasing and Strategic Sourcing Department at (915) 212-0043.

19. PREVAILING WAGE RATES AND WAGE RATE PENALTY

The Contractor and any subcontractor under him shall pay not less than the general prevailing wage rates contained herein, to all laborers, workmen and mechanics employed by them in the execution of this contract. When multiple wage rates are used (e.g. Federal wage rates and City wage rates) featuring similar job classifications, the higher wage within the relevant construction type shall be paid.

The general prevailing wage rates contained herein shall be posted at the construction work site in a prominent and accessible place where it can be easily seen by all laborers, workmen and mechanics employed on the project.

Pursuant to Chapter 2258, Texas Government Codes, the Contractor shall forfeit as a penalty to the City of El Paso sixty dollars ($60.00) for each laborer, workman or mechanic employed, for each calendar day, or portion thereof such laborer, workman or mechanic is paid less than the said stipulated rates for any work done under this contract, by him, or by any subcontractor under him.

20. APPRENTICES

The successful Offeror shall be required to comply with sections 5.24 and 5.25 of the General Conditions of the Construction Contract. The Offeror shall meet the

requirements of registration for a bona fide apprenticeship program, the allowable ratio of apprentices on the job site and the apprentice wage rates and fringe benefits. The Offeror shall participate in a DOL certified apprenticeship program when the work required under the contract includes work that must be performed by apprenticeable occupations and the work involving such apprenticeable occupation has a value of **fifty thousand dollars** or more. The apprenticeable occupations are those listed in Section 5.24 of the General Conditions of the Construction Contract. Noncompliance of the contract provisions concerning the apprenticeship participation may be a basis to terminate the construction contract, which shall be referred to the City Council for determination.

21. INSURANCE AND WORKER'S COMPENSATION INSURANCE

The successful Offeror will be required to furnish certificates of insurance to the Owner that will comply with Paragraphs 5.11 and 5.12 of the General Conditions of this Contract. The Offeror's attention is directed to these insurance and workers' compensation requirements. It will be presumed that each Offeror has read these requirements and that any cost associated with these requirements has been incorporated into the proposal submitted to the Owner and the successful Offeror will have no claim for compensation against the Owner.

22. OFFEROR ACKNOWLEDGEMENT AND AGREEMENT OF CONTRACT

All Offerors, by submitting a proposal hereunder acknowledge understand and agree to the following: All terms, covenants, conditions and any other provisions of the Construction Contract, shall become a part hereof for all purposes. The Offeror formally awarded this contract, shall execute the above-referenced construction contract, and shall be bound to all provisions of this contract in the performance of the project.

23. TRAFFIC CONTROL PLANS

It shall be the duty and responsibility of the contractor to submit to the Capital Improvement Department or Owner Designee for review three (3) sets of plans for traffic control for this project within twenty one (21) days of award, in accordance with paragraph 2.6, Maintenance and Protection of Traffic of the General Conditions.

The submitted plans must be sealed by a registered professional engineer who is certified to design and implement traffic control plans.

24. PROJECT PROGRESS & PAYMENT SCHEDULES

Prior to award, Contractor shall provide Owner, in an electronic format, with project progress and payment schedules created in MS Projects, to be used for optimal project coordination. Any payment schedules will be considered estimates, and will not be contractually binding insofar as all payment applications will be processed and paid for as work is completed to the Owner's satisfaction. The Contractor shall submit updated schedules monthly throughout the course of the project; however, the Owner reserves the right to request updates at any given time.

This project will be set-up for payment through electronic funds transfer. The City will process the electronic funds transfer within five (5) days of receipt of the approved pay application from the Project's Architect and Project Manager. The vendor's banking institution may assess a processing fee for ACH and wire transfer transactions. The City

reserves the right to process a manual check in the event that electronic fund processing issues arise.

NOTE: All vendors **must** accept an ACH payment effective immediately. Vendors must fill-out the attached Accounts Payable Direct Deposit Sign-Up Form located in Section I-E of this document to facilitate the Automated Clearing House (ACH) payment process.

Contract Payments
All contract payments shall be made in accordance with the Contract's invoice payment terms. The City of El Paso will make no advance payments for the goods and/or services that are subject of this solicitation, unless otherwise noted in the Form of Contract. Invoices may be submitted on no more than a monthly basis. Refer to section III-A page 51.

PROMPT PAYMENT

Unless a prompt payment discount is offered and accepted by the City of El Paso, payments will be made to the Contractor within thirty (30) days following acceptance of goods or services, or receipt of a properly prepared invoice by the City Department identified in the Invoice Instructions set forth on the Purchase Order, whichever is later. Any discount for prompt payment will be calculated from the day goods or services are accepted or when a properly prepared invoice is received. Payments will be considered to have been made on the date of mailing (postmark) of the payment check or, for an electronic funds transfer, the specified payment date. Invoices are to be submitted in single copy to the appropriate Department.

PAYMENT TERMS: Please mark appropriate block.

_____% - 10 Days ☐
_____% - 20 Days ☐
_____% - 30 Days ☐
Net - 30 Days ☐

Late Payment fees will incur at the State of Texas statutory rate.

25. ORGANIZATION CERTIFICATE, ASSUMED NAME CERTIFICATE/DBA CERTIFICATE, AND BUSINESS AFFIDAVIT

Offeror must submit with his offer a copy of the company's organization certificate issued by the Secretary of State of the State in which the Offeror was organized. If the Offeror uses a trade name other than the name under which the company was organized, Offeror must also submit a copy of the Assumed Name Certificate. Also, a DBA certificate must be provided if the Offeror uses a trade name other than the name under which the company was organized. Further, Offeror must complete and submit the affidavit at the end of section I-E, Supplemental Bidder Information, stating what names the company uses and has used in the past and attest that all such names describe the company currently submitting a proposal.

26. CONE OF SILENCE/ANTI-LOBBYING POLICY

The City's Cone of Silence/Anti Lobbying Policy was adopted to ensure a fair and competitive bidding environment by preventing communication between City officials,

employees, or representatives and parties involved in the bidding process that could create an unfair advantage to any party with respect to the award of a city contract.

The Cone of Silence period begins on the day that the request for proposal (RFP), request for qualifications (RFQ), a competitive bid, a highest qualified bid (including best value and competitive sealed proposals), design-build, public-private partnership or any other type of solicitation required by law, is advertised, or the day a source selection or the giving of a notice of a proposed project is made, and ends on the day that a recommendation of a contract award is posted by the city clerk for placement on the agenda.

For an unsolicited or competing proposal for a public-private partnership, the period in which no person or registrant shall engage in any lobbying activities with city officials and employees shall begin on the date that the City receives an unsolicited proposal and end on the date the notice of award has been posted by the city clerk for placement on the agenda.

The Cone of Silence/Anti Lobbying Policy prohibits any communication or lobbying activities during the Cone of Silence period, by any person, including but not limited to, bidders, lobbyists or consultants of bidders, service providers or potential vendors and any the following:

1. City Staff and City Consultants, including any employee of the City of El Paso, any person retained by the City of El Paso as a Consultant on the project, or any person having participated in the development, design, or review of documents related to the project.

2. City Officials, including the Mayor, Council Representatives and their respective staff.

3. Members of the City's Selection Committee, whether City employees or outside experts appointed or selected by the City.

The Cone of Silence/Anti Lobbying Policy does not apply to:

1. Questions of Process and Procedure, including oral communications with the Purchasing Director or Procurement Analyst, provided the communications are strictly limited to matters of process or procedure already contained in the solicitation document. A minimum of ten days will be provided for questions during solicitation unless otherwise stated in the Solicitation Schedule of Events in the documents.

2. Pre-Proposal/Pre-Bid Conferences, including oral communications at pre-proposal or pre-bid conferences, oral presentations before selection committees, contract negotiations, and public presentations made to the Mayor and Council Representatives during a duly noticed public meeting.

3. Written Communications, to the Procurement Analyst identified in the solicitation.

A person who knowingly or intentionally lobbies in violation of the provisions of this policy, or who shall knowingly obstruct or prevent compliance with this policy shall be guilty of a misdemeanor.

Furthermore, any person who knowingly or intentionally violates the provisions of this

policy, with respect to the solicitation or award of a discretionary contract may be prohibited by the city council from entering into any contract with the city for a period not to exceed three years.

27. NOTICE: PUBLIC DISCLOSURE OF BID INFORMATION

Offerors are cautioned that once a bid is opened, all information contained therein will be available to the **PUBLIC** unless the information is excepted from the requirements of Government Code Section 552.021 pertaining to Open Records. The exception that allows the City to protect information that, if released, would give advantage to a competitor or bidder does not apply after the bidding is complete and the contract has been awarded. *Trade secrets, commercial or financial background data and privileged or confidential information* may be excepted from public inspection. If any information contained in your offer qualifies for an exception because it falls into one of the categories above it should be clearly marked "CONFIDENTIAL" and the basis of your claim of confidentiality should be stated. Data so identified will be maintained as a protected record. Offerors who claim that information contained in a bid should be protected from public disclosure after the award of the contract may be asked to support such claim if the City receives an Open Records request for the information and requests a determination by the Attorney General. [Rev. 04-03-98]

Recommendation(s) for formal awards shall be posted on the City's website the Thursday afternoon prior to the Tuesday City Council Meeting wherein the recommendation shall be presented. Vendors are responsible for monitoring the City's website for said postings.

28. COOPERATIVE PURCHASING

This contract may be utilized for purchases by other local government entities under an interlocal cooperation agreement, Texas Government Code Chapter 791. Any contract award by the City of El Paso on behalf of another local government entity shall be contingent upon the issuance of a purchase order or execution of a separate contract by the other local government entity. The Contractor must deal directly with the local government entity concerning the placement of orders, issuance of the purchase order, insurance certificates, contractual disputes, invoicing and payment or any other terms and conditions that the other local government entity may require. The actual utilization of this contract award by the other local government entity is at the sole discretion of that other local government entity.

The City of El Paso is acting on the behalf of other local government entities for the sole purpose of complying with Texas competitive bidding requirements and shall not be held liable for any costs, damages, etc. incurred by any bidder with regard to any purchase by another local government entity. The City of El Paso shall be legally responsible only for payment for goods and services in the quantities detailed in the City's own purchase order or contract.

NOTE 1: BIDDERS ARE REQUIRED TO SUBMIT OFFERS ON THE PRESCRIBED FORM(S) (UNALTERED). OFFERS SUBMITTED ON OTHER THAN THE PRESCRIBED FORM(S) MAY BE CONSIDERED INCOMPLETE OR NON-RESPONSIVE. FAILURE TO FURNISH REQUIRED DOCUMENTATION WITH THE BID MAY RESULT IN THE BID BEING DEEMED INCOMPLETE AND NON-RESPONSIVE, RESULTING IN REJECTION.

NOTE 2: THE CITY IS NOT RESPONSIBLE FOR LOCATING OR SECURING ANY INFORMATION THAT IS NOT IDENTIFIED IN THE OFFER AND REASONABLY AVAILABLE TO THE CITY, AND THE CITY WILL NOT BE RESPONSIBLE FOR LOCATING OR SECURING INFORMATION NOT INCLUDED WITH THE OFFER. IN CONDUCTING ITS ASSESSMENT THE CITY MAY USE DATA PROVIDED BY THE BIDDER AND DATA OBTAINED FROM OTHER SOURCES, BUT WHILE THE CITY MAY ELECT TO CONSIDER DATA OBTAINED FROM OTHER SOURCES THE BURDEN OF PROVIDING THOROUGH AND COMPLETE INFORMATION RESTS WITH THE BIDDER.

NOTE 3: THE CITY MAY ACCEPT THE LOWEST RESPONSIBLE AND RESPONSIVE BID BASED ON THE TABULATION OF ANY ONE, COMBINATION OR ALL OF THE BASE BID(S), ALTERNATE BID(S), AND/OR OPTIONAL BID(S) BASED ON THE MOST ADVANTAGEOUS PROJECT BID THAT IS DESIRED BY THE CITY DEPARTMENT INVOLVED AND THAT THE CITY COUNCIL IN THEIR SOLE JUDGMENT DETERMINES IS IN THE CITY'S BEST INTEREST AND BENEFIT.

NOTE 4: AT ANY TIME DURING THE TERM OF THE CONTRACT THE PURCHASING DIRECTOR OR DESIGNATED PERSONNEL MAY INCREASE OR DECREASE THE SCOPE OF SUPPLIES AND OR SERVICES AS HE MAY FIND NECESSARY TO ACCOMPLISH THE GENERAL PURPOSE OF THE CONTRACT.

NOTE 5: ALL GOODS AND SERVICES DELIVERED SHALL COMPLY WITH THE SPECIFICATIONS SET FORTH IN SECTION B. DESCRIPTIVE LITERATURE CONTAINING SUFFICIENT INFORMATION TO DETERMINE PRODUCT COMPLIANCE WITH SPECIFICATIONS MUST ACCOMPANY BID. THE CITY OF EL PASO RESERVES THE RIGHT TO REQUEST SAMPLES FROM BIDDER(S) PRIOR TO AWARD OF CONTRACT.

NOTE 6: IN ADDITION TO ANY OTHER DISCOUNT, THE CITY IS ENTITLED TO A DEDUCTION FOR FEDERAL EXCISE TAX IF IT IS INCLUDED ON THE MANUFACTURER'S PUBLISHED PRICE LIST FOR APPLICABLE ITEMS, AND CONTRACTOR MUST INVOICE ACCORDINGLY. A FEDERAL TAX EXEMPTION CERTIFICATION WILL BE PROVIDED BY THE CITY, UPON REQUEST.

NOTE 7: BIDDER MUST SUBMIT WITH HIS OFFER A COPY OF THE COMPANY'S ORGANIZATION CERTIFICATE ISSUED BY THE SECRETARY OF STATE OF THE STATE IN WHICH THE BIDDER/PROPOSER WAS ORGANIZED. ALSO, A DBA CERTIFICATE MUST BE PROVIDED IF THE BIDDER/PROPOSER USED A TRADE NAME IN THE SOLICITATION DOCUMENTS OTHER THAN THE NAME UNDER WHICH THE COMPANY WAS ORGANIZED. FURTHER, THE BIDDER/PROPOSER MUST FILL OUT THE AFFIDAVIT IN SECTION D STATING WHAT NAMES THE COMPANY USES AND HAS USED IN THE PAST AND ATTEST THAT ALL SUCH NAMES DESCRIBE THE COMPANY CURRENTLY SUBMITTING A BID OR PROPOSAL.

NOTE 8: ACCURACY OF ESTIMATED QUANTITIES – THE CITY BELIEVES THAT THE NUMBERS USED AS ITEM QUANTITIES TO BE A REASONABLY ACCURATE ESTIMATE; HOWEVER, THE ACTUAL QUANTITY MAY BE MORE OR LESS THAN THE ESTIMATE, AND SHALL NOT BE THE BASIS FOR ANY CHANGE IN THE CONTRACT PER UNIT PRICE. ADDITIONALLY, ESTIMATES ARE MINIMUMS, BUT NOT GUARANTEED MINIMUMS, AND THE CONTRACT COST CAN INCREASE SO LONG AS THE UNIT COSTS REMAIN THE SAME AND INCREASED FUNDS ARE APPROPRIATED IN THE BUDGET.

<u>NOTE 9</u>: ANY MANUFACTURER NAMES, TRADE NAMES, BRAND NAMES, OR CATALOG NUMBERS USED IN THESE SPECIFICATIONS ARE FOR THE PURPOSE OF DESCRIBING AND ESTABLISHING MINIMUM REQUIREMENTS OR LEVEL OF QUALITY AND DESIGN REQUIRED. THEY ARE IN NO WAY INTENDED TO PROHIBIT THE BIDDING OF OTHER MANUFACTURERS' ITEMS OF EQUAL MATERIAL AND QUALITY OR MEANT TO EXCLUDE ANY OTHER MAKE AND MODEL FROM BEING CONSIDERED. VENDORS WHO WISH TO BID A FUNCTIONALLY EQUIVALENT ITEM(S) WHICH MEETS OR EXCEEDS THE SPECIFICATIONS MUST FURNISH WITH THE BID DESCRIPTIVE LITERATURE CONTAINING SUFFICIENT INFORMATION TO DETERMINE PRODUCT COMPLIANCE.

<u>NOTE 10</u>:ALL OFFERS ARE SUBJECT TO THE TERMS AND CONDITIONS OF THIS SOLICITATION. MATERIAL EXCEPTIONS TO THE TERMS AND CONDITIONS, OR FAILURE TO MEET THE CITY'S MINIMUM SPECIFICATIONS, SHALL RENDER THE OFFER NON-RESPONSIVE TO THE SOLICITATION.

<u>NOTE 11</u>:REFER TO METHOD OF AWARD SECTION I-C-A

<u>NOTE 12</u>:PROMPT PAYMENT DISCOUNTS WILL BE CONSIDERED WHEN DETERMINING THE APPARENT LOWEST BIDDER, PROVIDING THE CITY IS ALLOWED AT LEAST TEN (10) DAYS IN WHICH TO TAKE ADVANTAGE OF THE DISCOUNT.

<u>NOTE 13</u>:AS PART OF THE REQUIREMENT TO ESTABLISH THE RESPONSIBILITY OF THE OFFEROR, THE CITY OF EL PASO MAY PERFORM A PRICE ANALYSIS TO DETERMINE THE REASONABLENESS OF THE PRICE(S) AT WHICH THE SUPPLIES AND/OR SERVICES ARE OFFERED. PRICES THAT ARE SIGNIFICANTLY LOWER THAN THE MEAN OF ALL OFFERS AND THAT APPEAR TO BE UNREASONABLY LOW MAY BE DETERMINED TO BE EVIDENCE OF NON-RESPONSIBILITY, AND CAUSE THE OFFER TO BE REJECTED.

29. WAGE THEFT

The City of El Paso Code – Chapter 346

346.010 Definition

1. ***Wage Theft Adjudication*** occurs when:

1. Employer is criminally convicted as an employer pursuant to Section 61.019 of the Texas Labor Code for failure to pay wages; or

2. Injunctive relief is granted in district court under Section 61.020 of the Texas Labor Code against the employer for repeated failures to pay wages as required by Chapter 61 of the Texas Labor Code; or

3. A wage payment determination order becomes final under Section 61.055 or Section 61.060 of the Texas Labor Code; or

4. The Texas Workforce Commission assesses an administrative penalty under Section 61.053 of the Texas Labor Code against the employer for acting in bad faith in not paying wages as required by Chapter 61 of the Texas Labor Code; or

5. Employer is convicted for Theft of Service under Section 31.04 of the Texas Penal Code; or

6. Court of competent jurisdiction finds that an employer engaged in wage theft.

2. ***Employee*** and ***employer*** have the meanings by Texas Labor Code, Section 61.001.

3. ***Wages*** means compensation owed by an employer for labor or services rendered by an employee, whether computed on a time, task piece, commission or other basis.

4. ***Wage Enforcement Coordinator*** shall mean the person designated by the City Manager to receive and investigate claims of wage theft and to create, maintain a Wage Theft database.

5. ***Wage Theft Complaint*** means a written complaint filed with the Wage Theft Coordinator alleging any instance of wage theft by an employer.

Section 3.46.020 WAGE THEFT COORDINATOR

A. **Appointment.** The City Manager shall designate a Wage Theft Coordinator to perform the duties identified in this Section.

B. **Duties.** The Wage Theft Coordinator shall:

1. Wage Theft Adjudication Database- the Wage Theft Coordinator shall create and maintain a database of employers located or operating within the City of El Paso who have a Wage Theft Adjudication record. The Wage Theft Database will be created on a “complaint basis” and populated with information provided by third parties. The Wage Theft Coordinator shall be under no obligation to investigate wage theft or to prosecute complaints.

2. Substantiate whether a proposed party to a City Contract has a Wage Theft Adjudication record or part of the Wage Theft Adjudication Database.

3. Receive, review, and process wage theft complaint according to the process established in Section 3.46.040.

4. Coordinate with the Purchasing Director to ensure that the notice of the City’s Wage Theft ordinance is included in all the City’s bid documents.

5. Provide and present an annual report to City Council regarding the number of employers in the Wage Theft Adjudication Database and an

update on the status of the enforcement of the City's Wage Theft ordinance.

Section 3.46.030 WAGE THEFT ADJUDICATION DATABASE

A. Inclusion in Database. No employer shall be included in the database until the

Wage Theft Coordinator has:

1. Confirmed that an employer has a Wage Theft Adjudication record;

2. Provided written notice at the address provided by the complainant, or on the documents evidencing the wage theft adjudication of the inclusion of the employer in the Wage Theft Adjudication Database.

3. Allowed the employer thirty (30) days from the date of the notice to protest the employer's inclusion in such database and provide the Wage Theft Coordinator evidence that the employer should not be included in the Wage Theft Adjudication Database. In the case of a wage theft judgment, the Wage Theft Coordinator shall not include the employer in the Database upon proof of full payment of outstanding wage theft adjudication judgment.

B. Identity of Employer. An employer operating as a business entity shall be listed by its corporate name, address and type of business organization. If the employer is an individual, the person's name, business address, type of business or occupation shall be included.

C. Removal from Database. An employer shall be removed from the database if:

1. A Wage Theft Adjudication has been annulled, withdrawn, overturned, rescinded or abrogated, and such fact has been confirmed by the Wage Theft Coordinator; or

2. Employer provides proof of full payment of an outstanding wage theft adjudication judgment; or

3. Five (5) years or more has elapsed since the date of the employer's most recent Wage Theft Adjudication.

Section 3.46.040 WAGE THEFT COMPLAINTS PROCEDURE

A. Non- City Contracts. If no City contract is involved, the Wage Theft Coordinator shall assist persons with wage theft complaints by referring the complaint to the Texas Workforce Commission.

B. City Contracts.

1. **Filing a Complaint.** A person employed in connection with a city contract who has a good faith belief that he is the victim of wage theft may file a wage theft complaint with the Wage Theft Coordinator in writing. The complaint shall contain fact including but not limited to: identity of the employer, date(s) on or during which the wages were earned and were due to be paid, the amount of the wages alleged to have been withheld or

unpaid.

2. **Notification and Resolution of the Complaint.** The Wage Theft Coordinator shall notify the employer of the receipt of the wage theft complaint. Employer shall attempt to resolve the alleged issue with the affected employee by written agreement within thirty (30) days from the receipt of the City notification. Employer shall notify the Wage Theft Coordinator if the issue was resolved between the Employer and the affected employee.

3. **Texas Workforce Commission.**

a) If no resolution is achieved, the complainant shall be referred to the Texas Workforce Commission ("Commission").

b) The Wage Theft Coordinator shall seek to determine status of the complaint at the commission. The Wage Theft Coordinator shall place Employer in the Wage Theft Adjudication Database if it appears that the Commission has made a finding that wage theft occurred.

Section 3.46.050 RETALIATION PROHIBITED

a. No City Contractor shall retaliate against any person who has filed a wage theft complaint pursuant to this Chapter. Retaliation means action to discharge from employment, discipline, or otherwise punish an employee for filing a wage theft complaint in good faith.

b. If the Wage Theft Coordinator determines that retaliation has occurred, the Wage Theft Coordinator shall refer the matter to the City Attorney for appropriate action.

Section 3.46.060. SANCTIONS AND PENALTIES- CITY CONTRACTS

A. **Existing City Agreement.**

1. In the event the City becomes aware of the fact an Employer acting under a contract which was awarded prior to the effective date of this Ordinance has been adjudicated for wage theft, the City may terminate the contract.

2. Prior to terminating the contract the City will provide Employer with thirty (30) days' notice and opportunity to provide full proof of payment of outstanding wage theft adjudication judgment.

3. The award of future City contracts after termination of an existing contract due to an Employer's wage theft adjudication shall be managed as a New City Agreement in this section.

B. **New City Agreement.**

1. In the event the City becomes aware an Employer with a wage theft adjudication record has submitted a bid or proposal for City work prior to the award of a contract, the City shall deem the Employer non-responsible and refuse to enter into a City Agreement with such Employer for a period of five (5) years after the date of final adjudication.

2. Prior to deeming the Employer as non-responsible, the City will provide the Employer with thirty (30) days' notice and opportunity to provide full proof of payment of outstanding wage theft adjudication judgment.

TITLE VI REQUIREMENT

Title VI Contract Provisions

Subrecipients of federal financial assistance must ensure that the clauses of Appendix A of the U.S. DOT Standard Title VI Assurances are inserted in every contract subject to the Act and the Regulations and that Form FHWA-1273 be physically attached to all federal-aid construction contracts of $10,000 or more.

NOTE TO CONTRACTORS:

FORM 1273 and **Appendix A** (attached) must be inserted in all subcontractor contracts.

The successful bidder will be required to provide a copy of each of its subcontractors (all tiers) to verify that the above mentioned provisions are included.

APPENDIX A

During the performance of this contract, the contractor, for itself, its assignees and successors in interest (hereinafter referred to as the "contractor") agrees as follows:

(1) **Compliance with Regulations**: The contractor shall comply with the Regulations relative to nondiscrimination in Federally-assisted programs of the Department of Transportation (hereinafter, "DOT") Title 49, Code of Federal Regulations, Part 21, as they may be amended from time to time, (hereinafter referred to as the Regulations), which are herein incorporated by reference and made a part of this contract.

(2) **Nondiscrimination**: The Contractor, with regard to the work performed by it during the contract, shall not discriminate on the grounds of race, color, or national origin in the selection and retention of subcontractors, including procurements of materials and leases of equipment. The contractor shall not participate either directly or indirectly in the discrimination prohibited by section 21.5 of the Regulations, including employment practices when the contract covers a program set forth in Appendix B of the Regulations.

(3) **Solicitations for Subcontractors, Including Procurements of Materials and Equipment**: In all solicitations either by competitive bidding or negotiation made by the contractor for work to be performed under a subcontract, including procurements of materials or leases of equipment, each potential subcontractor or supplier shall be notified by the contractor of the contractor's obligations under this contract and the Regulations relative to nondiscrimination on the grounds of race, color, or national origin.

(4) **Information and Reports**: The contractor shall provide all information and reports required by the Regulations or directives issued pursuant thereto, and shall permit access to its books, records, accounts other sources of information, and its facilities as may be determined by the *City of El Paso* to be pertinent to ascertain compliance with such Regulations, orders and instructions. Where any information required of a contractor is in the exclusive possession of another who fails or refuses to furnish this information the contractor shall so certify to the City of El Paso, as appropriate, and shall set forth what efforts it has made to obtain the information.

(5) **Sanctions for Noncompliance**: In the event of the contractor's noncompliance with the nondiscrimination provisions of this contract, the City of El Paso shall impose such contract sanctions as it may determine to be appropriate, including but not limited to:

   a. Withholding of payments to the contractor under the contract until the contractor complies, and / or
   b. Cancellation, termination or suspension of the contract in whole or in part.

(6) **Incorporation of Provisions:** The contractor shall include the provisions of paragraphs (1) through (6) in every subcontract, including procurements of materials and leases of equipment, unless exempt by the Regulations, or directive issued pursuant thereto. The contractor shall take such action with respect to any subcontract or procurement as the City of El Paso may direct as a means of enforcing such provisions including sanctions for non-compliance: Provided, however, that in the event a contractor becomes involved in, or is threatened with litigation with a subcontractor or supplier as a result of such direction, the contractor may request the City of El Paso to enter into such litigation to protect the interests of the City of El Paso, and in addition, the contractor may request the United States to enter into such litigation to protect the interests of the United States.

REQUIRED CONTRACT PROVISIONS
FEDERAL-AID CONSTRUCTION CONTRACTS

I. General
II. Nondiscrimination
III. Nonsegregated Facilities
IV. Davis-Bacon and Related Act Provisions
V. Contract Work Hours and Safety Standards Act Provisions
VI. Subletting or Assigning the Contract
VII. Safety: Accident Prevention
VIII. False Statements Concerning Highway Projects
IX. Implementation of Clean Air Act and Federal Water Pollution Control Act
X. Compliance with Governmentwide Suspension and Debarment Requirements
XI. Certification Regarding Use of Contract Funds for Lobbying

ATTACHMENTS

A. Employment and Materials Preference for Appalachian Development Highway System or Appalachian Local Access Road Contracts (included in Appalachian contracts only)

I. GENERAL

1. Form FHWA-1273 must be physically incorporated in each construction contract funded under Title 23 (excluding emergency contracts solely intended for debris removal). The contractor (or subcontractor) must insert this form in each subcontract and further require its inclusion in all lower tier subcontracts (excluding purchase orders, rental agreements and other agreements for supplies or services).

The applicable requirements of Form FHWA-1273 are incorporated by reference for work done under any purchase order, rental agreement or agreement for other services. The prime contractor shall be responsible for compliance by any subcontractor, lower-tier subcontractor or service provider.

Form FHWA-1273 must be included in all Federal-aid design-build contracts, in all subcontracts and in lower tier subcontracts (excluding subcontracts for design services, purchase orders, rental agreements and other agreements for supplies or services). The design-builder shall be responsible for compliance by any subcontractor, lower-tier subcontractor or service provider.

Contracting agencies may reference Form FHWA-1273 in bid proposal or request for proposal documents, however, the Form FHWA-1273 must be physically incorporated (not referenced) in all contracts, subcontracts and lower-tier subcontracts (excluding purchase orders, rental agreements and other agreements for supplies or services related to a construction contract).

2. Subject to the applicability criteria noted in the following sections, these contract provisions shall apply to all work performed on the contract by the contractor's own organization and with the assistance of workers under the contractor's immediate superintendence and to all work performed on the contract by piecework, station work, or by subcontract.

3. A breach of any of the stipulations contained in these Required Contract Provisions may be sufficient grounds for withholding of progress payments, withholding of final payment, termination of the contract, suspension / debarment or any other action determined to be appropriate by the contracting agency and FHWA.

4. Selection of Labor: During the performance of this contract, the contractor shall not use convict labor for any purpose within the limits of a construction project on a Federal-aid highway unless it is labor performed by convicts who are on parole, supervised release, or probation. The term Federal-aid highway does not include roadways functionally classified as local roads or rural minor collectors.

II. NONDISCRIMINATION

The provisions of this section related to 23 CFR Part 230 are applicable to all Federal-aid construction contracts and to all related construction subcontracts of $10,000 or more. The provisions of 23 CFR Part 230 are not applicable to material supply, engineering, or architectural service contracts.

In addition, the contractor and all subcontractors must comply with the following policies: Executive Order 11246, 41 CFR 60, 29 CFR 1625-1627, Title 23 USC Section 140, the Rehabilitation Act of 1973, as amended (29 USC 794), Title VI of the Civil Rights Act of 1964, as amended, and related regulations including 49 CFR Parts 21, 26 and 27; and 23 CFR Parts 200, 230, and 633.

The contractor and all subcontractors must comply with: the requirements of the Equal Opportunity Clause in 41 CFR 60-1.4(b) and, for all construction contracts exceeding $10,000, the Standard Federal Equal Employment Opportunity Construction Contract Specifications in 41 CFR 60-4.3.

Note: The U.S. Department of Labor has exclusive authority to determine compliance with Executive Order 11246 and the policies of the Secretary of Labor including 41 CFR 60, and 29 CFR 1625-1627. The contracting agency and the FHWA have the authority and the responsibility to ensure compliance with Title 23 USC Section 140, the Rehabilitation Act of 1973, as amended (29 USC 794), and Title VI of the Civil Rights Act of 1964, as amended, and related regulations including 49 CFR Parts 21, 26 and 27; and 23 CFR Parts 200, 230, and 633.

The following provision is adopted from 23 CFR 230, Appendix A, with appropriate revisions to conform to the U.S. Department of Labor (US DOL) and FHWA requirements.

1. Equal Employment Opportunity: Equal employment opportunity (EEO) requirements not to discriminate and to take affirmative action to assure equal opportunity as set forth under laws, executive orders, rules, regulations (28 CFR 35, 29 CFR 1630, 29 CFR 1625-1627, 41 CFR 60 and 49 CFR 27) and orders of the Secretary of Labor as modified by the provisions prescribed herein, and imposed pursuant to 23 U.S.C. 140 shall constitute the EEO and specific affirmative action standards for the contractor's project activities under

this contract. The provisions of the Americans with Disabilities Act of 1990 (42 U.S.C. 12101 et seq.) set forth under 28 CFR 35 and 29 CFR 1630 are incorporated by reference in this contract. In the execution of this contract, the contractor agrees to comply with the following minimum specific requirement activities of EEO:

a. The contractor will work with the contracting agency and the Federal Government to ensure that it has made every good faith effort to provide equal opportunity with respect to all of its terms and conditions of employment and in their review of activities under the contract.

b. The contractor will accept as its operating policy the following statement:

"It is the policy of this Company to assure that applicants are employed, and that employees are treated during employment, without regard to their race, religion, sex, color, national origin, age or disability. Such action shall include: employment, upgrading, demotion, or transfer; recruitment or recruitment advertising; layoff or termination; rates of pay or other forms of compensation; and selection for training, including apprenticeship, pre-apprenticeship, and/or on-the-job training."

2. EEO Officer: The contractor will designate and make known to the contracting officers an EEO Officer who will have the responsibility for and must be capable of effectively administering and promoting an active EEO program and who must be assigned adequate authority and responsibility to do so.

3. Dissemination of Policy: All members of the contractor's staff who are authorized to hire, supervise, promote, and discharge employees, or who recommend such action, or who are substantially involved in such action, will be made fully cognizant of, and will implement, the contractor's EEO policy and contractual responsibilities to provide EEO in each grade and classification of employment. To ensure that the above agreement will be met, the following actions will be taken as a minimum:

a. Periodic meetings of supervisory and personnel office employees will be conducted before the start of work and then not less often than once every six months, at which time the contractor's EEO policy and its implementation will be reviewed and explained. The meetings will be conducted by the EEO Officer.

b. All new supervisory or personnel office employees will be given a thorough indoctrination by the EEO Officer, covering all major aspects of the contractor's EEO obligations within thirty days following their reporting for duty with the contractor.

c. All personnel who are engaged in direct recruitment for the project will be instructed by the EEO Officer in the contractor's procedures for locating and hiring minorities and women.

d. Notices and posters setting forth the contractor's EEO policy will be placed in areas readily accessible to employees, applicants for employment and potential employees.

e. The contractor's EEO policy and the procedures to implement such policy will be brought to the attention of employees by means of meetings, employee handbooks, or other appropriate means.

4. Recruitment: When advertising for employees, the contractor will include in all advertisements for employees the notation: "An Equal Opportunity Employer." All such advertisements will be placed in publications having a large circulation among minorities and women in the area from which the project work force would normally be derived.

a. The contractor will, unless precluded by a valid bargaining agreement, conduct systematic and direct recruitment through public and private employee referral sources likely to yield qualified minorities and women. To meet this requirement, the contractor will identify sources of potential minority group employees, and establish with such identified sources procedures whereby minority and women applicants may be referred to the contractor for employment consideration.

b. In the event the contractor has a valid bargaining agreement providing for exclusive hiring hall referrals, the contractor is expected to observe the provisions of that agreement to the extent that the system meets the contractor's compliance with EEO contract provisions. Where implementation of such an agreement has the effect of discriminating against minorities or women, or obligates the contractor to do the same, such implementation violates Federal nondiscrimination provisions.

c. The contractor will encourage its present employees to refer minorities and women as applicants for employment. Information and procedures with regard to referring such applicants will be discussed with employees.

5. Personnel Actions: Wages, working conditions, and employee benefits shall be established and administered, and personnel actions of every type, including hiring, upgrading, promotion, transfer, demotion, layoff, and termination, shall be taken without regard to race, color, religion, sex, national origin, age or disability. The following procedures shall be followed:

a. The contractor will conduct periodic inspections of project sites to insure that working conditions and employee facilities do not indicate discriminatory treatment of project site personnel.

b. The contractor will periodically evaluate the spread of wages paid within each classification to determine any evidence of discriminatory wage practices.

c. The contractor will periodically review selected personnel actions in depth to determine whether there is evidence of discrimination. Where evidence is found, the contractor will promptly take corrective action. If the review indicates that the discrimination may extend beyond the actions reviewed, such corrective action shall include all affected persons.

d. The contractor will promptly investigate all complaints of alleged discrimination made to the contractor in connection with its obligations under this contract, will attempt to resolve such complaints, and will take appropriate corrective action within a reasonable time. If the investigation indicates that the discrimination may affect persons other than the complainant, such corrective action shall include such other persons. Upon completion of each investigation, the contractor will inform every complainant of all of their avenues of appeal.

6. Training and Promotion:

a. The contractor will assist in locating, qualifying, and increasing the skills of minorities and women who are

applicants for employment or current employees. Such efforts should be aimed at developing full journey level status employees in the type of trade or job classification involved.

b. Consistent with the contractor's work force requirements and as permissible under Federal and State regulations, the contractor shall make full use of training programs, i.e., apprenticeship, and on-the-job training programs for the geographical area of contract performance. In the event a special provision for training is provided under this contract, this subparagraph will be superseded as indicated in the special provision. The contracting agency may reserve training positions for persons who receive welfare assistance in accordance with 23 U.S.C. 140(a).

c. The contractor will advise employees and applicants for employment of available training programs and entrance requirements for each.

d. The contractor will periodically review the training and promotion potential of employees who are minorities and women and will encourage eligible employees to apply for such training and promotion.

7. Unions: If the contractor relies in whole or in part upon unions as a source of employees, the contractor will use good faith efforts to obtain the cooperation of such unions to increase opportunities for minorities and women. Actions by the contractor, either directly or through a contractor's association acting as agent, will include the procedures set forth below:

a. The contractor will use good faith efforts to develop, in cooperation with the unions, joint training programs aimed toward qualifying more minorities and women for membership in the unions and increasing the skills of minorities and women so that they may qualify for higher paying employment.

b. The contractor will use good faith efforts to incorporate an EEO clause into each union agreement to the end that such union will be contractually bound to refer applicants without regard to their race, color, religion, sex, national origin, age or disability.

c. The contractor is to obtain information as to the referral practices and policies of the labor union except that to the extent such information is within the exclusive possession of the labor union and such labor union refuses to furnish such information to the contractor, the contractor shall so certify to the contracting agency and shall set forth what efforts have been made to obtain such information.

d. In the event the union is unable to provide the contractor with a reasonable flow of referrals within the time limit set forth in the collective bargaining agreement, the contractor will, through independent recruitment efforts, fill the employment vacancies without regard to race, color, religion, sex, national origin, age or disability; making full efforts to obtain qualified and/or qualifiable minorities and women. The failure of a union to provide sufficient referrals (even though it is obligated to provide exclusive referrals under the terms of a collective bargaining agreement) does not relieve the contractor from the requirements of this paragraph. In the event the union referral practice prevents the contractor from meeting the obligations pursuant to Executive Order 11246, as amended, and these special provisions, such contractor shall immediately notify the contracting agency.

8. Reasonable Accommodation for Applicants / Employees with Disabilities: The contractor must be familiar with the requirements for and comply with the Americans with Disabilities Act and all rules and regulations established there under. Employers must provide reasonable accommodation in all employment activities unless to do so would cause an undue hardship.

9. Selection of Subcontractors, Procurement of Materials and Leasing of Equipment: The contractor shall not discriminate on the grounds of race, color, religion, sex, national origin, age or disability in the selection and retention of subcontractors, including procurement of materials and leases of equipment. The contractor shall take all necessary and reasonable steps to ensure nondiscrimination in the administration of this contract.

a. The contractor shall notify all potential subcontractors and suppliers and lessors of their EEO obligations under this contract.

b. The contractor will use good faith efforts to ensure subcontractor compliance with their EEO obligations.

10. Assurance Required by 49 CFR 26.13(b):

a. The requirements of 49 CFR Part 26 and the State DOT's U.S. DOT-approved DBE program are incorporated by reference.

b. The contractor or subcontractor shall not discriminate on the basis of race, color, national origin, or sex in the performance of this contract. The contractor shall carry out applicable requirements of 49 CFR Part 26 in the award and administration of DOT-assisted contracts. Failure by the contractor to carry out these requirements is a material breach of this contract, which may result in the termination of this contract or such other remedy as the contracting agency deems appropriate.

11. Records and Reports: The contractor shall keep such records as necessary to document compliance with the EEO requirements. Such records shall be retained for a period of three years following the date of the final payment to the contractor for all contract work and shall be available at reasonable times and places for inspection by authorized representatives of the contracting agency and the FHWA.

a. The records kept by the contractor shall document the following:

(1) The number and work hours of minority and non-minority group members and women employed in each work classification on the project;

(2) The progress and efforts being made in cooperation with unions, when applicable, to increase employment opportunities for minorities and women; and

(3) The progress and efforts being made in locating, hiring, training, qualifying, and upgrading minorities and women;

b. The contractors and subcontractors will submit an annual report to the contracting agency each July for the duration of the project, indicating the number of minority, women, and non-minority group employees currently engaged in each work classification required by the contract work. This information is to be reported on Form FHWA-1391. The staffing data should represent the project work force on board in all or any part of the last payroll period preceding the end of July. If on-the-job training is being required by special provision, the contractor

will be required to collect and report training data. The employment data should reflect the work force on board during all or any part of the last payroll period preceding the end of July.

III. NONSEGREGATED FACILITIES

This provision is applicable to all Federal-aid construction contracts and to all related construction subcontracts of $10,000 or more.

The contractor must ensure that facilities provided for employees are provided in such a manner that segregation on the basis of race, color, religion, sex, or national origin cannot result. The contractor may neither require such segregated use by written or oral policies nor tolerate such use by employee custom. The contractor's obligation extends further to ensure that its employees are not assigned to perform their services at any location, under the contractor's control, where the facilities are segregated. The term "facilities" includes waiting rooms, work areas, restaurants and other eating areas, time clocks, restrooms, washrooms, locker rooms, and other storage or dressing areas, parking lots, drinking fountains, recreation or entertainment areas, transportation, and housing provided for employees. The contractor shall provide separate or single-user restrooms and necessary dressing or sleeping areas to assure privacy between sexes.

IV. DAVIS-BACON AND RELATED ACT PROVISIONS

This section is applicable to all Federal-aid construction projects exceeding $2,000 and to all related subcontracts and lower-tier subcontracts (regardless of subcontract size). The requirements apply to all projects located within the right-of-way of a roadway that is functionally classified as Federal-aid highway. This excludes roadways functionally classified as local roads or rural minor collectors, which are exempt. Contracting agencies may elect to apply these requirements to other projects.

The following provisions are from the U.S. Department of Labor regulations in 29 CFR 5.5 “Contract provisions and related matters” with minor revisions to conform to the FHWA-1273 format and FHWA program requirements.

1. Minimum wages

a. All laborers and mechanics employed or working upon the site of the work, will be paid unconditionally and not less often than once a week, and without subsequent deduction or rebate on any account (except such payroll deductions as are permitted by regulations issued by the Secretary of Labor under the Copeland Act (29 CFR part 3)), the full amount of wages and bona fide fringe benefits (or cash equivalents thereof) due at time of payment computed at rates not less than those contained in the wage determination of the Secretary of Labor which is attached hereto and made a part hereof, regardless of any contractual relationship which may be alleged to exist between the contractor and such laborers and mechanics.

Contributions made or costs reasonably anticipated for bona fide fringe benefits under section 1(b)(2) of the Davis-Bacon Act on behalf of laborers or mechanics are considered wages paid to such laborers or mechanics, subject to the provisions of paragraph 1.d. of this section; also, regular contributions made or costs incurred for more than a weekly period (but not less often than quarterly) under plans, funds, or programs which cover the particular weekly period, are deemed to be constructively made or incurred during such weekly period. Such laborers and mechanics shall be paid the appropriate wage rate and fringe benefits on the wage determination for the classification of work actually performed, without regard to skill, except as provided in 29 CFR 5.5(a)(4). Laborers or mechanics performing work in more than one classification may be compensated at the rate specified for each classification for the time actually worked therein: Provided, That the employer's payroll records accurately set forth the time spent in each classification in which work is performed. The wage determination (including any additional classification and wage rates conformed under paragraph 1.b. of this section) and the Davis-Bacon poster (WH–1321) shall be posted at all times by the contractor and its subcontractors at the site of the work in a prominent and accessible place where it can be easily seen by the workers.

b.(1) The contracting officer shall require that any class of laborers or mechanics, including helpers, which is not listed in the wage determination and which is to be employed under the contract shall be classified in conformance with the wage determination. The contracting officer shall approve an additional classification and wage rate and fringe benefits therefore only when the following criteria have been met:

(i) The work to be performed by the classification requested is not performed by a classification in the wage determination; and

(ii) The classification is utilized in the area by the construction industry; and

(iii) The proposed wage rate, including any bona fide fringe benefits, bears a reasonable relationship to the wage rates contained in the wage determination.

(2) If the contractor and the laborers and mechanics to be employed in the classification (if known), or their representatives, and the contracting officer agree on the classification and wage rate (including the amount designated for fringe benefits where appropriate), a report of the action taken shall be sent by the contracting officer to the Administrator of the Wage and Hour Division, Employment Standards Administration, U.S. Department of Labor, Washington, DC 20210. The Administrator, or an authorized representative, will approve, modify, or disapprove every additional classification action within 30 days of receipt and so advise the contracting officer or will notify the contracting officer within the 30-day period that additional time is necessary.

(3) In the event the contractor, the laborers or mechanics to be employed in the classification or their representatives, and the contracting officer do not agree on the proposed classification and wage rate (including the amount designated for fringe benefits, where appropriate), the contracting officer shall refer the questions, including the views of all interested parties and the recommendation of the contracting officer, to the Wage and Hour Administrator for determination. The Wage and Hour Administrator, or an authorized representative, will issue a determination within 30 days of receipt and so advise the contracting officer or

will notify the contracting officer within the 30-day period that additional time is necessary.

(4) The wage rate (including fringe benefits where appropriate) determined pursuant to paragraphs 1.b.(2) or 1.b.(3) of this section, shall be paid to all workers performing work in the classification under this contract from the first day on which work is performed in the classification.

c. Whenever the minimum wage rate prescribed in the contract for a class of laborers or mechanics includes a fringe benefit which is not expressed as an hourly rate, the contractor shall either pay the benefit as stated in the wage determination or shall pay another bona fide fringe benefit or an hourly cash equivalent thereof.

d. If the contractor does not make payments to a trustee or other third person, the contractor may consider as part of the wages of any laborer or mechanic the amount of any costs reasonably anticipated in providing bona fide fringe benefits under a plan or program, Provided, That the Secretary of Labor has found, upon the written request of the contractor, that the applicable standards of the Davis-Bacon Act have been met. The Secretary of Labor may require the contractor to set aside in a separate account assets for the meeting of obligations under the plan or program.

2. Withholding

The contracting agency shall upon its own action or upon written request of an authorized representative of the Department of Labor, withhold or cause to be withheld from the contractor under this contract, or any other Federal contract with the same prime contractor, or any other federally-assisted contract subject to Davis-Bacon prevailing wage requirements, which is held by the same prime contractor, so much of the accrued payments or advances as may be considered necessary to pay laborers and mechanics, including apprentices, trainees, and helpers, employed by the contractor or any subcontractor the full amount of wages required by the contract. In the event of failure to pay any laborer or mechanic, including any apprentice, trainee, or helper, employed or working on the site of the work, all or part of the wages required by the contract, the contracting agency may, after written notice to the contractor, take such action as may be necessary to cause the suspension of any further payment, advance, or guarantee of funds until such violations have ceased.

3. Payrolls and basic records

a. Payrolls and basic records relating thereto shall be maintained by the contractor during the course of the work and preserved for a period of three years thereafter for all laborers and mechanics working at the site of the work. Such records shall contain the name, address, and social security number of each such worker, his or her correct classification, hourly rates of wages paid (including rates of contributions or costs anticipated for bona fide fringe benefits or cash equivalents thereof of the types described in section 1(b)(2)(B) of the Davis-Bacon Act), daily and weekly number of hours worked, deductions made and actual wages paid. Whenever the Secretary of Labor has found under 29 CFR 5.5(a)(1)(iv) that the wages of any laborer or mechanic include the amount of any costs reasonably anticipated in providing benefits under a plan or program described in section 1(b)(2)(B) of the Davis-Bacon Act, the contractor shall maintain records which show that the commitment to provide such benefits is enforceable, that the plan or program is financially responsible, and that the plan or program has been communicated in writing to the laborers or mechanics affected, and records which show the costs anticipated or the actual cost incurred in providing such benefits. Contractors employing apprentices or trainees under approved programs shall maintain written evidence of the registration of apprenticeship programs and certification of trainee programs, the registration of the apprentices and trainees, and the ratios and wage rates prescribed in the applicable programs.

b.(1) The contractor shall submit weekly for each week in which any contract work is performed a copy of all payrolls to the contracting agency. The payrolls submitted shall set out accurately and completely all of the information required to be maintained under 29 CFR 5.5(a)(3)(i), except that full social security numbers and home addresses shall not be included on weekly transmittals. Instead the payrolls shall only need to include an individually identifying number for each employee (e.g. , the last four digits of the employee's social security number). The required weekly payroll information may be submitted in any form desired. Optional Form WH–347 is available for this purpose from the Wage and Hour Division Web site at http://www.dol.gov/esa/whd/forms/wh347instr.htm or its successor site. The prime contractor is responsible for the submission of copies of payrolls by all subcontractors. Contractors and subcontractors shall maintain the full social security number and current address of each covered worker, and shall provide them upon request to the contracting agency for transmission to the State DOT, the FHWA or the Wage and Hour Division of the Department of Labor for purposes of an investigation or audit of compliance with prevailing wage requirements. It is not a violation of this section for a prime contractor to require a subcontractor to provide addresses and social security numbers to the prime contractor for its own records, without weekly submission to the contracting agency..

(2) Each payroll submitted shall be accompanied by a "Statement of Compliance," signed by the contractor or subcontractor or his or her agent who pays or supervises the payment of the persons employed under the contract and shall certify the following:

(i) That the payroll for the payroll period contains the information required to be provided under §5.5 (a)(3)(ii) of Regulations, 29 CFR part 5, the appropriate information is being maintained under §5.5 (a)(3)(i) of Regulations, 29 CFR part 5, and that such information is correct and complete;

(ii) That each laborer or mechanic (including each helper, apprentice, and trainee) employed on the contract during the payroll period has been paid the full weekly wages earned, without rebate, either directly or indirectly, and that no deductions have been made either directly or indirectly from the full wages earned, other than permissible deductions as set forth in Regulations, 29 CFR part 3;

(iii) That each laborer or mechanic has been paid not less than the applicable wage rates and fringe benefits or cash equivalents for the classification of work performed, as specified in the applicable wage determination incorporated into the contract.

(3) The weekly submission of a properly executed certification set forth on the reverse side of Optional Form WH–347 shall satisfy the requirement for submission of the "Statement of Compliance" required by paragraph 3.b.(2) of this section.

(4) The falsification of any of the above certifications may subject the contractor or subcontractor to civil or criminal prosecution under section 1001 of title 18 and section 231 of title 31 of the United States Code.

c. The contractor or subcontractor shall make the records required under paragraph 3.a. of this section available for inspection, copying, or transcription by authorized representatives of the contracting agency, the State DOT, the FHWA, or the Department of Labor, and shall permit such representatives to interview employees during working hours on the job. If the contractor or subcontractor fails to submit the required records or to make them available, the FHWA may, after written notice to the contractor, the contracting agency or the State DOT, take such action as may be necessary to cause the suspension of any further payment, advance, or guarantee of funds. Furthermore, failure to submit the required records upon request or to make such records available may be grounds for debarment action pursuant to 29 CFR 5.12.

4. Apprentices and trainees

a. Apprentices (programs of the USDOL).

Apprentices will be permitted to work at less than the predetermined rate for the work they performed when they are employed pursuant to and individually registered in a bona fide apprenticeship program registered with the U.S. Department of Labor, Employment and Training Administration, Office of Apprenticeship Training, Employer and Labor Services, or with a State Apprenticeship Agency recognized by the Office, or if a person is employed in his or her first 90 days of probationary employment as an apprentice in such an apprenticeship program, who is not individually registered in the program, but who has been certified by the Office of Apprenticeship Training, Employer and Labor Services or a State Apprenticeship Agency (where appropriate) to be eligible for probationary employment as an apprentice.

The allowable ratio of apprentices to journeymen on the job site in any craft classification shall not be greater than the ratio permitted to the contractor as to the entire work force under the registered program. Any worker listed on a payroll at an apprentice wage rate, who is not registered or otherwise employed as stated above, shall be paid not less than the applicable wage rate on the wage determination for the classification of work actually performed. In addition, any apprentice performing work on the job site in excess of the ratio permitted under the registered program shall be paid not less than the applicable wage rate on the wage determination for the work actually performed. Where a contractor is performing construction on a project in a locality other than that in which its program is registered, the ratios and wage rates (expressed in percentages of the journeyman's hourly rate) specified in the contractor's or subcontractor's registered program shall be observed.

Every apprentice must be paid at not less than the rate specified in the registered program for the apprentice's level of progress, expressed as a percentage of the journeymen hourly rate specified in the applicable wage determination. Apprentices shall be paid fringe benefits in accordance with the provisions of the apprenticeship program. If the apprenticeship program does not specify fringe benefits, apprentices must be paid the full amount of fringe benefits listed on the wage determination for the applicable classification. If the Administrator determines that a different practice prevails for the applicable apprentice classification, fringes shall be paid in accordance with that determination.

In the event the Office of Apprenticeship Training, Employer and Labor Services, or a State Apprenticeship Agency recognized by the Office, withdraws approval of an apprenticeship program, the contractor will no longer be permitted to utilize apprentices at less than the applicable predetermined rate for the work performed until an acceptable program is approved.

b. Trainees (programs of the USDOL).

Except as provided in 29 CFR 5.16, trainees will not be permitted to work at less than the predetermined rate for the work performed unless they are employed pursuant to and individually registered in a program which has received prior approval, evidenced by formal certification by the U.S. Department of Labor, Employment and Training Administration.

The ratio of trainees to journeymen on the job site shall not be greater than permitted under the plan approved by the Employment and Training Administration.

Every trainee must be paid at not less than the rate specified in the approved program for the trainee's level of progress, expressed as a percentage of the journeyman hourly rate specified in the applicable wage determination. Trainees shall be paid fringe benefits in accordance with the provisions of the trainee program. If the trainee program does not mention fringe benefits, trainees shall be paid the full amount of fringe benefits listed on the wage determination unless the Administrator of the Wage and Hour Division determines that there is an apprenticeship program associated with the corresponding journeyman wage rate on the wage determination which provides for less than full fringe benefits for apprentices. Any employee listed on the payroll at a trainee rate who is not registered and participating in a training plan approved by the Employment and Training Administration shall be paid not less than the applicable wage rate on the wage determination for the classification of work actually performed. In addition, any trainee performing work on the job site in excess of the ratio permitted under the registered program shall be paid not less than the applicable wage rate on the wage determination for the work actually performed.

In the event the Employment and Training Administration withdraws approval of a training program, the contractor will no longer be permitted to utilize trainees at less than the applicable predetermined rate for the work performed until an acceptable program is approved.

c. Equal employment opportunity. The utilization of apprentices, trainees and journeymen under this part shall be in conformity with the equal employment opportunity requirements of Executive Order 11246, as amended, and 29 CFR part 30.

d. Apprentices and Trainees (programs of the U.S. DOT).

Apprentices and trainees working under apprenticeship and skill training programs which have been certified by the Secretary of Transportation as promoting EEO in connection with Federal-aid highway construction programs are not subject to the requirements of paragraph 4 of this Section IV. The straight time hourly wage rates for apprentices and trainees under such programs will be established by the particular programs. The ratio of apprentices and trainees to journeymen shall not be greater than permitted by the terms of the particular program.

5. Compliance with Copeland Act requirements. The contractor shall comply with the requirements of 29 CFR part 3, which are incorporated by reference in this contract.

6. Subcontracts. The contractor or subcontractor shall insert Form FHWA-1273 in any subcontracts and also require the subcontractors to include Form FHWA-1273 in any lower tier subcontracts. The prime contractor shall be responsible for the compliance by any subcontractor or lower tier subcontractor with all the contract clauses in 29 CFR 5.5.

7. Contract termination: debarment. A breach of the contract clauses in 29 CFR 5.5 may be grounds for termination of the contract, and for debarment as a contractor and a subcontractor as provided in 29 CFR 5.12.

8. Compliance with Davis-Bacon and Related Act requirements. All rulings and interpretations of the Davis-Bacon and Related Acts contained in 29 CFR parts 1, 3, and 5 are herein incorporated by reference in this contract.

9. Disputes concerning labor standards. Disputes arising out of the labor standards provisions of this contract shall not be subject to the general disputes clause of this contract. Such disputes shall be resolved in accordance with the procedures of the Department of Labor set forth in 29 CFR parts 5, 6, and 7. Disputes within the meaning of this clause include disputes between the contractor (or any of its subcontractors) and the contracting agency, the U.S. Department of Labor, or the employees or their representatives.

10. Certification of eligibility.

a. By entering into this contract, the contractor certifies that neither it (nor he or she) nor any person or firm who has an interest in the contractor's firm is a person or firm ineligible to be awarded Government contracts by virtue of section 3(a) of the Davis-Bacon Act or 29 CFR 5.12(a)(1).

b. No part of this contract shall be subcontracted to any person or firm ineligible for award of a Government contract by virtue of section 3(a) of the Davis-Bacon Act or 29 CFR 5.12(a)(1).

c. The penalty for making false statements is prescribed in the U.S. Criminal Code, 18 U.S.C. 1001.

V. CONTRACT WORK HOURS AND SAFETY STANDARDS ACT

The following clauses apply to any Federal-aid construction contract in an amount in excess of $100,000 and subject to the overtime provisions of the Contract Work Hours and Safety Standards Act. These clauses shall be inserted in addition to the clauses required by 29 CFR 5.5(a) or 29 CFR 4.6. As used in this paragraph, the terms laborers and mechanics include watchmen and guards.

1. Overtime requirements. No contractor or subcontractor contracting for any part of the contract work which may require or involve the employment of laborers or mechanics shall require or permit any such laborer or mechanic in any workweek in which he or she is employed on such work to work in excess of forty hours in such workweek unless such laborer or mechanic receives compensation at a rate not less than one and one-half times the basic rate of pay for all hours worked in excess of forty hours in such workweek.

2. Violation; liability for unpaid wages; liquidated damages. In the event of any violation of the clause set forth in paragraph (1.) of this section, the contractor and any subcontractor responsible therefor shall be liable for the unpaid wages. In addition, such contractor and subcontractor shall be liable to the United States (in the case of work done under contract for the District of Columbia or a territory, to such District or to such territory), for liquidated damages. Such liquidated damages shall be computed with respect to each individual laborer or mechanic, including watchmen and guards, employed in violation of the clause set forth in paragraph (1.) of this section, in the sum of $10 for each calendar day on which such individual was required or permitted to work in excess of the standard workweek of forty hours without payment of the overtime wages required by the clause set forth in paragraph (1.) of this section.

3. Withholding for unpaid wages and liquidated damages. The FHWA or the contacting agency shall upon its own action or upon written request of an authorized representative of the Department of Labor withhold or cause to be withheld, from any moneys payable on account of work performed by the contractor or subcontractor under any such contract or any other Federal contract with the same prime contractor, or any other federally-assisted contract subject to the Contract Work Hours and Safety Standards Act, which is held by the same prime contractor, such sums as may be determined to be necessary to satisfy any liabilities of such contractor or subcontractor for unpaid wages and liquidated damages as provided in the clause set forth in paragraph (2.) of this section.

4. Subcontracts. The contractor or subcontractor shall insert in any subcontracts the clauses set forth in paragraph (1.) through (4.) of this section and also a clause requiring the subcontractors to include these clauses in any lower tier subcontracts. The prime contractor shall be responsible for compliance by any subcontractor or lower tier subcontractor with the clauses set forth in paragraphs (1.) through (4.) of this section.

VI. SUBLETTING OR ASSIGNING THE CONTRACT

This provision is applicable to all Federal-aid construction contracts on the National Highway System.

1. The contractor shall perform with its own organization contract work amounting to not less than 30 percent (or a greater percentage if specified elsewhere in the contract) of the total original contract price, excluding any specialty items designated by the contracting agency. Specialty items may be performed by subcontract and the amount of any such specialty items performed may be deducted from the total original contract price before computing the amount of work required to be performed by the contractor's own organization (23 CFR 635.116).

a. The term “perform work with its own organization” refers to workers employed or leased by the prime contractor, and equipment owned or rented by the prime contractor, with or without operators. Such term does not include employees or equipment of a subcontractor or lower tier subcontractor, agents of the prime contractor, or any other assignees. The term may include payments for the costs of hiring leased employees from an employee leasing firm meeting all relevant Federal and State regulatory requirements. Leased employees may only be included in this term if the prime contractor meets all of the following conditions:

(1) the prime contractor maintains control over the supervision of the day-to-day activities of the leased employees;
(2) the prime contractor remains responsible for the quality of the work of the leased employees;
(3) the prime contractor retains all power to accept or exclude individual employees from work on the project; and
(4) the prime contractor remains ultimately responsible for the payment of predetermined minimum wages, the submission of payrolls, statements of compliance and all other Federal regulatory requirements.

b. "Specialty Items" shall be construed to be limited to work that requires highly specialized knowledge, abilities, or equipment not ordinarily available in the type of contracting organizations qualified and expected to bid or propose on the contract as a whole and in general are to be limited to minor components of the overall contract.

2. The contract amount upon which the requirements set forth in paragraph (1) of Section VI is computed includes the cost of material and manufactured products which are to be purchased or produced by the contractor under the contract provisions.

3. The contractor shall furnish (a) a competent superintendent or supervisor who is employed by the firm, has full authority to direct performance of the work in accordance with the contract requirements, and is in charge of all construction operations (regardless of who performs the work) and (b) such other of its own organizational resources (supervision, management, and engineering services) as the contracting officer determines is necessary to assure the performance of the contract.

4. No portion of the contract shall be sublet, assigned or otherwise disposed of except with the written consent of the contracting officer, or authorized representative, and such consent when given shall not be construed to relieve the contractor of any responsibility for the fulfillment of the contract. Written consent will be given only after the contracting agency has assured that each subcontract is evidenced in writing and that it contains all pertinent provisions and requirements of the prime contract.

5. The 30% self-performance requirement of paragraph (1) is not applicable to design-build contracts; however, contracting agencies may establish their own self-performance requirements.

VII. SAFETY: ACCIDENT PREVENTION

This provision is applicable to all Federal-aid construction contracts and to all related subcontracts.

1. In the performance of this contract the contractor shall comply with all applicable Federal, State, and local laws governing safety, health, and sanitation (23 CFR 635). The contractor shall provide all safeguards, safety devices and protective equipment and take any other needed actions as it determines, or as the contracting officer may determine, to be reasonably necessary to protect the life and health of employees on the job and the safety of the public and to protect property in connection with the performance of the work covered by the contract.

2. It is a condition of this contract, and shall be made a condition of each subcontract, which the contractor enters into pursuant to this contract, that the contractor and any subcontractor shall not permit any employee, in performance of the contract, to work in surroundings or under conditions which are unsanitary, hazardous or dangerous to his/her health or safety, as determined under construction safety and health standards (29 CFR 1926) promulgated by the Secretary of Labor, in accordance with Section 107 of the Contract Work Hours and Safety Standards Act (40 U.S.C. 3704).

3. Pursuant to 29 CFR 1926.3, it is a condition of this contract that the Secretary of Labor or authorized representative thereof, shall have right of entry to any site of contract performance to inspect or investigate the matter of compliance with the construction safety and health standards and to carry out the duties of the Secretary under Section 107 of the Contract Work Hours and Safety Standards Act (40 U.S.C.3704).

VIII. FALSE STATEMENTS CONCERNING HIGHWAY PROJECTS

This provision is applicable to all Federal-aid construction contracts and to all related subcontracts.

In order to assure high quality and durable construction in conformity with approved plans and specifications and a high degree of reliability on statements and representations made by engineers, contractors, suppliers, and workers on Federal-aid highway projects, it is essential that all persons concerned with the project perform their functions as carefully, thoroughly, and honestly as possible. Willful falsification, distortion, or misrepresentation with respect to any facts related to the project is a violation of Federal law. To prevent any misunderstanding regarding the seriousness of these and similar acts, Form FHWA-1022 shall be posted on each Federal-aid highway project (23 CFR 635) in one or more places where it is readily available to all persons concerned with the project:

18 U.S.C. 1020 reads as follows:

"Whoever, being an officer, agent, or employee of the United States, or of any State or Territory, or whoever, whether a person, association, firm, or corporation, knowingly makes any false statement, false representation, or false report as to the character, quality, quantity, or cost of the material used or to be used, or the quantity or quality of the work performed or to be performed, or the cost thereof in connection with the submission of plans, maps, specifications, contracts, or costs of construction on any highway or related project submitted for approval to the Secretary of Transportation; or

Whoever knowingly makes any false statement, false representation, false report or false claim with respect to the character, quality, quantity, or cost of any work performed or to be performed, or materials furnished or to be furnished, in connection with the construction of any highway or related project approved by the Secretary of Transportation; or

Whoever knowingly makes any false statement or false representation as to material fact in any statement, certificate, or report submitted pursuant to provisions of the Federal-aid Roads Act approved July 1, 1916, (39 Stat. 355), as amended and supplemented;

Shall be fined under this title or imprisoned not more than 5 years or both."

IX. IMPLEMENTATION OF CLEAN AIR ACT AND FEDERAL WATER POLLUTION CONTROL ACT

This provision is applicable to all Federal-aid construction contracts and to all related subcontracts.

By submission of this bid/proposal or the execution of this contract, or subcontract, as appropriate, the bidder, proposer, Federal-aid construction contractor, or subcontractor, as appropriate, will be deemed to have stipulated as follows:

1. That any person who is or will be utilized in the performance of this contract is not prohibited from receiving an award due to a violation of Section 508 of the Clean Water Act or Section 306 of the Clean Air Act.
2. That the contractor agrees to include or cause to be included the requirements of paragraph (1) of this Section X in every subcontract, and further agrees to take such action as the contracting agency may direct as a means of enforcing such requirements.

X. CERTIFICATION REGARDING DEBARMENT, SUSPENSION, INELIGIBILITY AND VOLUNTARY EXCLUSION

This provision is applicable to all Federal-aid construction contracts, design-build contracts, subcontracts, lower-tier subcontracts, purchase orders, lease agreements, consultant contracts or any other covered transaction requiring FHWA approval or that is estimated to cost $25,000 or more – as defined in 2 CFR Parts 180 and 1200.

1**. Instructions for Certification – First Tier Participants:**

a. By signing and submitting this proposal, the prospective first tier participant is providing the certification set out below.

b. The inability of a person to provide the certification set out below will not necessarily result in denial of participation in this covered transaction. The prospective first tier participant shall submit an explanation of why it cannot provide the certification set out below. The certification or explanation will be considered in connection with the department or agency's determination whether to enter into this transaction. However, failure of the prospective first tier participant to furnish a certification or an explanation shall disqualify such a person from participation in this transaction.

c. The certification in this clause is a material representation of fact upon which reliance was placed when the contracting agency determined to enter into this transaction. If it is later determined that the prospective participant knowingly rendered an erroneous certification, in addition to other remedies available to the Federal Government, the contracting agency may terminate this transaction for cause of default.

d. The prospective first tier participant shall provide immediate written notice to the contracting agency to whom this proposal is submitted if any time the prospective first tier participant learns that its certification was erroneous when submitted or has become erroneous by reason of changed circumstances.

e. The terms "covered transaction," "debarred," "suspended," "ineligible," "participant," "person," "principal," and "voluntarily excluded," as used in this clause, are defined in 2 CFR Parts 180 and 1200. "First Tier Covered Transactions" refers to any covered transaction between a grantee or subgrantee of Federal funds and a participant (such as the prime or general contract). "Lower Tier Covered Transactions" refers to any covered transaction under a First Tier Covered Transaction (such as subcontracts). "First Tier Participant" refers to the participant who has entered into a covered transaction with a grantee or subgrantee of Federal funds (such as the prime or general contractor). "Lower Tier Participant" refers any participant who has entered into a covered transaction with a First Tier Participant or other Lower Tier Participants (such as subcontractors and suppliers).

f. The prospective first tier participant agrees by submitting this proposal that, should the proposed covered transaction be entered into, it shall not knowingly enter into any lower tier covered transaction with a person who is debarred, suspended, declared ineligible, or voluntarily excluded from participation in this covered transaction, unless authorized by the department or agency entering into this transaction.

g. The prospective first tier participant further agrees by submitting this proposal that it will include the clause titled "Certification Regarding Debarment, Suspension, Ineligibility and Voluntary Exclusion-Lower Tier Covered Transactions," provided by the department or contracting agency, entering into this covered transaction, without modification, in all lower tier covered transactions and in all solicitations for lower tier covered transactions exceeding the $25,000 threshold.

h. A participant in a covered transaction may rely upon a certification of a prospective participant in a lower tier covered transaction that is not debarred, suspended, ineligible, or voluntarily excluded from the covered transaction, unless it knows that the certification is erroneous. A participant is responsible for ensuring that its principals are not suspended, debarred, or otherwise ineligible to participate in covered transactions. To verify the eligibility of its principals, as well as the eligibility of any lower tier prospective participants, each participant may, but is not required to, check the Excluded Parties List System website (https://www.epls.gov/), which is compiled by the General Services Administration.

i. Nothing contained in the foregoing shall be construed to require the establishment of a system of records in order to render in good faith the certification required by this clause. The knowledge and information of the prospective participant is not required to exceed that which is normally possessed by a prudent person in the ordinary course of business dealings.

j. Except for transactions authorized under paragraph (f) of these instructions, if a participant in a covered transaction knowingly enters into a lower tier covered transaction with a person who is suspended, debarred, ineligible, or voluntarily excluded from participation in this transaction, in addition to other remedies available to the Federal Government, the department or agency may terminate this transaction for cause or default.

* * * * *

2. Certification Regarding Debarment, Suspension, Ineligibility and Voluntary Exclusion – First Tier Participants:

a. The prospective first tier participant certifies to the best of its knowledge and belief, that it and its principals:

(1) Are not presently debarred, suspended, proposed for debarment, declared ineligible, or voluntarily excluded from participating in covered transactions by any Federal department or agency;

(2) Have not within a three-year period preceding this proposal been convicted of or had a civil judgment rendered against them for commission of fraud or a criminal offense in connection with obtaining, attempting to obtain, or performing a public (Federal, State or local) transaction or contract under a public transaction; violation of Federal or State antitrust statutes or commission of embezzlement, theft, forgery, bribery, falsification or destruction of records, making false statements, or receiving stolen property;

(3) Are not presently indicted for or otherwise criminally or civilly charged by a governmental entity (Federal, State or local) with commission of any of the offenses enumerated in paragraph (a)(2) of this certification; and

(4) Have not within a three-year period preceding this application/proposal had one or more public transactions (Federal, State or local) terminated for cause or default.

b. Where the prospective participant is unable to certify to any of the statements in this certification, such prospective participant shall attach an explanation to this proposal.

2. **Instructions for Certification - Lower Tier Participants:**

(Applicable to all subcontracts, purchase orders and other lower tier transactions requiring prior FHWA approval or estimated to cost $25,000 or more - 2 CFR Parts 180 and 1200)

a. By signing and submitting this proposal, the prospective lower tier is providing the certification set out below.

b. The certification in this clause is a material representation of fact upon which reliance was placed when this transaction was entered into. If it is later determined that the prospective lower tier participant knowingly rendered an erroneous certification, in addition to other remedies available to the Federal Government, the department, or agency with which this transaction originated may pursue available remedies, including suspension and/or debarment.

c. The prospective lower tier participant shall provide immediate written notice to the person to which this proposal is submitted if at any time the prospective lower tier participant learns that its certification was erroneous by reason of changed circumstances.

d. The terms "covered transaction," "debarred," "suspended," "ineligible," "participant," "person," "principal," and "voluntarily excluded," as used in this clause, are defined in 2 CFR Parts 180 and 1200. You may contact the person to which this proposal is submitted for assistance in obtaining a copy of those regulations. "First Tier Covered Transactions" refers to any covered transaction between a grantee or subgrantee of Federal funds and a participant (such as the prime or general contract). "Lower Tier Covered Transactions" refers to any covered transaction under a First Tier Covered Transaction (such as subcontracts). "First Tier Participant" refers to the participant who has entered into a covered transaction with a grantee or subgrantee of Federal funds (such as the prime or general contractor). "Lower Tier Participant" refers any participant who has entered into a covered transaction with a First Tier Participant or other Lower Tier Participants (such as subcontractors and suppliers).

e. The prospective lower tier participant agrees by submitting this proposal that, should the proposed covered transaction be entered into, it shall not knowingly enter into any lower tier covered transaction with a person who is debarred, suspended, declared ineligible, or voluntarily excluded from participation in this covered transaction, unless authorized by the department or agency with which this transaction originated.

f. The prospective lower tier participant further agrees by submitting this proposal that it will include this clause titled "Certification Regarding Debarment, Suspension, Ineligibility and Voluntary Exclusion-Lower Tier Covered Transaction," without modification, in all lower tier covered transactions and in all solicitations for lower tier covered transactions exceeding the $25,000 threshold.

g. A participant in a covered transaction may rely upon a certification of a prospective participant in a lower tier covered transaction that is not debarred, suspended, ineligible, or voluntarily excluded from the covered transaction, unless it knows that the certification is erroneous. A participant is responsible for ensuring that its principals are not suspended, debarred, or otherwise ineligible to participate in covered transactions. To verify the eligibility of its principals, as well as the eligibility of any lower tier prospective participants, each participant may, but is not required to, check the Excluded Parties List System website (https://www.epls.gov/), which is compiled by the General Services Administration.

h. Nothing contained in the foregoing shall be construed to require establishment of a system of records in order to render in good faith the certification required by this clause. The knowledge and information of participant is not required to exceed that which is normally possessed by a prudent person in the ordinary course of business dealings.

i. Except for transactions authorized under paragraph e of these instructions, if a participant in a covered transaction knowingly enters into a lower tier covered transaction with a person who is suspended, debarred, ineligible, or voluntarily excluded from participation in this transaction, in addition to other remedies available to the Federal Government, the

department or agency with which this transaction originated may pursue available remedies, including suspension and/or debarment.

* * * * *

Certification Regarding Debarment, Suspension, Ineligibility and Voluntary Exclusion--Lower Tier Participants:

1. The prospective lower tier participant certifies, by submission of this proposal, that neither it nor its principals is presently debarred, suspended, proposed for debarment, declared ineligible, or voluntarily excluded from participating in covered transactions by any Federal department or agency.

2. Where the prospective lower tier participant is unable to certify to any of the statements in this certification, such prospective participant shall attach an explanation to this proposal.

* * * * *

XI. CERTIFICATION REGARDING USE OF CONTRACT FUNDS FOR LOBBYING

This provision is applicable to all Federal-aid construction contracts and to all related subcontracts which exceed $100,000 (49 CFR 20).

1. The prospective participant certifies, by signing and submitting this bid or proposal, to the best of his or her knowledge and belief, that:

a. No Federal appropriated funds have been paid or will be paid, by or on behalf of the undersigned, to any person for influencing or attempting to influence an officer or employee of any Federal agency, a Member of Congress, an officer or employee of Congress, or an employee of a Member of Congress in connection with the awarding of any Federal contract, the making of any Federal grant, the making of any Federal loan, the entering into of any cooperative agreement, and the extension, continuation, renewal, amendment, or modification of any Federal contract, grant, loan, or cooperative agreement.

b. If any funds other than Federal appropriated funds have been paid or will be paid to any person for influencing or attempting to influence an officer or employee of any Federal agency, a Member of Congress, an officer or employee of Congress, or an employee of a Member of Congress in connection with this Federal contract, grant, loan, or cooperative agreement, the undersigned shall complete and submit Standard Form-LLL, "Disclosure Form to Report Lobbying," in accordance with its instructions.

2. This certification is a material representation of fact upon which reliance was placed when this transaction was made or entered into. Submission of this certification is a prerequisite for making or entering into this transaction imposed by 31 U.S.C. 1352. Any person who fails to file the required certification shall be subject to a civil penalty of not less than $10,000 and not more than $100,000 for each such failure.

3. The prospective participant also agrees by submitting its bid or proposal that the participant shall require that the language of this certification be included in all lower tier subcontracts, which exceed $100,000 and that all such recipients shall certify and disclose accordingly.

ATTACHMENT A - EMPLOYMENT AND MATERIALS PREFERENCE FOR APPALACHIAN DEVELOPMENT HIGHWAY SYSTEM OR APPALACHIAN LOCAL ACCESS ROAD CONTRACTS

This provision is applicable to all Federal-aid projects funded under the Appalachian Regional Development Act of 1965.

1. During the performance of this contract, the contractor undertaking to do work which is, or reasonably may be, done as on-site work, shall give preference to qualified persons who regularly reside in the labor area as designated by the DOL wherein the contract work is situated, or the subregion, or the Appalachian counties of the State wherein the contract work is situated, except:

a. To the extent that qualified persons regularly residing in the area are not available.

b. For the reasonable needs of the contractor to employ supervisory or specially experienced personnel necessary to assure an efficient execution of the contract work.

c. For the obligation of the contractor to offer employment to present or former employees as the result of a lawful collective bargaining contract, provided that the number of nonresident persons employed under this subparagraph (1c) shall not exceed 20 percent of the total number of employees employed by the contractor on the contract work, except as provided in subparagraph (4) below.

2. The contractor shall place a job order with the State Employment Service indicating (a) the classifications of the laborers, mechanics and other employees required to perform the contract work, (b) the number of employees required in each classification, (c) the date on which the participant estimates such employees will be required, and (d) any other pertinent information required by the State Employment Service to complete the job order form. The job order may be placed with the State Employment Service in writing or by telephone. If during the course of the contract work, the information submitted by the contractor in the original job order is substantially modified, the participant shall promptly notify the State Employment Service.

3. The contractor shall give full consideration to all qualified job applicants referred to him by the State Employment Service. The contractor is not required to grant employment to any job applicants who, in his opinion, are not qualified to perform the classification of work required.

4. If, within one week following the placing of a job order by the contractor with the State Employment Service, the State Employment Service is unable to refer any qualified job applicants to the contractor, or less than the number requested, the State Employment Service will forward a certificate to the contractor indicating the unavailability of applicants. Such certificate shall be made a part of the contractor's permanent project records. Upon receipt of this certificate, the contractor may employ persons who do not normally reside in the labor area to fill positions covered by the certificate, notwithstanding the provisions of subparagraph (1c) above.

5. The provisions of 23 CFR 633.207(e) allow the contracting agency to provide a contractual preference for the use of mineral resource materials native to the Appalachian region.

6. The contractor shall include the provisions of Sections 1 through 4 of this Attachment A in every subcontract for work which is, or reasonably may be, done as on-site work.

CITY OF EL PASO
COMPETITIVE SEALED PROPOSAL
SELECTION CRITERIA

EPIA Checked Baggage Inspection System
PROPOSAL No. 2016-963

Refer to Item 6 appearing in Section I-B of this solicitation entitled Method of Award Competitive Sealed Proposal.

COMPETITIVE SEALED PROPOSAL; BEST VALUE ASSESSMENT

- **<u>INSTRUCTIONS TO OFFERORS</u>: INFORMATION AND DOCUMENTATION RELATED TO ALL CRITERIA SPECIFIED WITHIN THIS SECTION MUST BE SUBMITTED WITH OFFEROR'S PROPOSAL. FAILURE TO FURNISH REQUIRED DOCUMENTATION AND INFORMATION RELATED TO THIS PROPOSAL MAY RESULT IN THE PROPOSAL BEING DEEMED INCOMPLETE, NON-RESPONSIVE OR MAY AFFECT POINT DETERMINATION.** The Owner is not responsible for locating or securing any information that is omitted from the Offerors proposal even if such information is reasonably available to the Owner.
- In conducting the Best Value assessment, the Owner (also referred to as "City") may use information provided by the Offeror and from other sources; however, the burden of providing thorough and complete information is the sole responsibility of the Offeror. **The City reserves the right to request additional information and/or verify information.**

A. Review Process

1. The Owner has determined that the Competitive Sealed Proposal method of procurement provides the best value for the Owner in this instance.
2. The Owner shall review the bid tabulation and proposal form to ensure that all proposals are responsive. Proposals that are not responsive shall not be further evaluated.
3. The owner shall evaluate all responsive proposals for responsibility. Offerors that are not responsible shall not be further evaluated.
4. Only offerors found to be both responsive and responsible shall be ranked according to the selection criteria. The offeror receiving the highest number of points shall be ranked first and each offeror thereafter shall be ranked in order of the number of points assigned to the offeror.

B. Criteria for determining Responsibility.

The City shall consider the following criteria in making its determination as to whether an Offeror or bidder (hereafter "Offeror") is responsible. Offerors the City determines not to be responsible shall not be ranked for award of contract. For purposes of this section B, "past

ten years" shall mean ten years immediately before the day the offer or bid (hereafter "offer") is submitted to the City. "Contract" shall mean any construction contract, whether completed or in progress, between Offeror and the City or any other owner within the past ten years.

1. Failure of Offeror to comply with contract requirements.
2. Default by Offeror resulting in termination of the contract by owner.
3. Insufficient qualifications, ability, capability, and skill of the Offeror to perform the contract.
4. Insufficient character, responsibility, integrity, reputation or experience of the Offeror, including but not limited to its subcontractors and project managers and superintendents.
5. Insufficient ability of Offeror to perform the contract promptly or within the time required in the contract, without delay or interference and whether the Offeror followed owner approved schedules.
6. Noncompliance by the Offeror with specification requirements relating to time of submission of specified data such as samples, models, drawings, certificates, pay applications, payrolls or other information on contracts in the last three years.
7. Overall poor performance by the Offeror on previous contracts.
8. Offeror does not have the adequate plant, equipment, and personnel to do the work properly and expeditiously.
9. Insufficient safety record and practices of the Offeror.
10. Insufficient cooperativeness and responsiveness by Offeror with owner, designer, subcontractors and suppliers of previous contacts.
11. Insufficient financial resources of Offeror that could adversely impact Offeror's ability to perform the contract or to pay subcontractors and suppliers in a timely manner.
12. Insufficient quality of performance (work, labor and materials) and quality control procedures and practices by Offeror on contracts.
13. The Offeror has insufficient financial, staffing, facility or other resources to meet the requirements of the warranty periods required in the contract for which the offer was submitted.
14. The Offeror has failed to demonstrate that he is able to comply with Owner's health insurance requirements for the proposed contract.

C. Selection Criteria:

The Offerors that are determined to be responsible shall be scored and ranked in accordance with the following criteria:

PART I – CSP Evaluation Factors

The evaluation of the Competitive Sealed Proposals for the EPIA CBIS Checked Baggage Inspection and Screening (CBIS) project will include an evaluation of the cost, qualifications and technical expertise presented in the proposals received. The evaluation of the Competitive Sealed Proposals for the CBIS is designed to award the contract to the highest ranked offeror found to be both responsive and responsible according to the selection criteria.

The Evaluation Committee will score the competitive sealed proposals based on the evaluation of the criteria indicated below to identify a recommended offeror for consideration. All proposals should be submitted and formatted sequentially to follow the factors and sub factors established in the evaluation criteria of this document. Failure to provide the requested information in the appropriate location may result in lower scores as committee members may not be able to clearly identify the responses to each of the criteria. Proposals will be evaluated based on the following Evaluation Factors:

EVALUATION FACTORS	MAXIMUM POINTS
A. Offeror's Proposed Bid	TBD
B. Offeror' s Experience and Reputation	TBD
C. Quality of the Offeror's Goods or Service	TBD
D. Proposed Key Personnel	TBD
E. Baggage Belt System Contractor Qualifications	TBD

Evaluation Factors Description

The maximum points that shall be awarded for each of the Evaluation Factors are detailed and described below.

FACTOR A - Offeror's Proposed Bid TBD

1. Offeror to provide complete bid form providing cost for base bid and all bid alternates or options if applicable. Complete bid forms must acknowledge receipt of all addenda received prior to bid date. Points will be allocated according to the calculation provided here.

Price Maximum 60 Points	Lowest Proposal Amount	Divided by Offeror's Amount	X 60	Total Points

FACTOR B — The Prime Contractor Experience and Reputation TBD

1. Evidence and documentation of prior experience that demonstrates the offeror's ability to satisfactorily perform construction required services. The offeror shall submit a minimum of **five (5) signature projects** completed by the offeror's prime firm to demonstrate the ability of the prime firm to manage and construct a project similar in complexity and cost to the CBIS within the **past five (5) years.** The project information submitted representing the project experience of the Offeror will be evaluated and scored by the committee. The offeror shall include the following information for each project:

   a) The project location

   b) Client name

   c) Key contact person, address, telephone number and email address

   d) The prime firm's role

   e) Project budget and Final construction cost

   f) Offeror to provide a detailed summary of each project. The summary will provide an explanation of how the work similar in complexity to the work required for the CBIS. Key components for the CBIS project:

      i. Building Addition on a facility that operates 24 hours a day

      ii. Airport Construction

      iii. Unforeseen Conditions (old facility)

      iv. Tying into existing utilities

      v. Tight working space

      vi. Baggage Belts Systems

      vii. Controls

   g) Providing graphic images of similar projects is encouraged.

2. **Client reference check**. For the five projects listed, client contacts will be asked to evaluate the offeror performance according to the following criteria. Offerors shall provide up-to-date Client Contact Information. The Owner will communicate with the

contacts provided in order to evaluate experience and performance. Failure to do so will result in zero points. No partial points will be awarded.

a) **Quality of Services Provided**; Did the offeror provide comprehensive and complete services to successfully meet the user needs represented in the original project scope and accommodate the requirements of owner change requests?

b) **Timeliness of Performance**; Was the offeror successful in planning and providing realistic schedules, monitoring performance, managing the completion of work in time, and implementing corrections/changes in a timely manner?

Factor C — The quality of the offeror's goods or services TBD

1. Offeror to provide a statement of their understanding of the scope of work, the methodology and approach offeror will utilize to successfully completing the project on time.

2. Offeror to provide a comprehensive Gantt type chart showing timeline of how offeror proposes to complete the project within the proposed project schedule—considering all phase sequencing and substantial/final completion dates. The timeline must incorporate at least 30 contingency days for unexpected delays in performance of the work, such as weather and unforeseen conditions. Contractor must also account for long lead items.

3. Comment on the feasibility of the project timeline and project phasing. Include details on how offeror will maintain work without impacting the airport operations.

4. Describe the offeror's team approach and tools to be utilized to manage project progression and ensure successful project completion. This may include unique or specialized unique or specialized processes like the use of Building Information Modeling (BIM) in project delivery, or other factors that distinguish the offeror from others.

5. Experience and knowledge with local conditions: Using the signature project examples provided, offeror to demonstrate their experience dealing with local issues including, but not limited to: Local bidding conditions, working with local trades and disciplines, area utilities, infrastructure, permitting and regional agency coordination. Offeror to explain how this experience will contribute to successful completion of the project on time.

Factor D - The offeror' s proposed personnel TBD

Offeror shall demonstrate relevant project experience similar in complexity and cost of the following key personnel proposed for this project:

1. Principal in Charge - Primary Point of Contact

2. Estimator

3. Project Manager
4. Construction Superintendent(s)
5. Baggage Belt subcontractor Project Manager

For the key personnel referenced above, offeror shall provide an organizational chart reflecting the position and general responsibilities, along with biographical data including; name of individual, company position, years of relevant experience, work and educational background and role and tasks to be assigned on this project. Offeror shall also provide percentage of work week to be committed to this project and on-site availability for all key personnel.

Factor E - Construction team's Baggage Belt System construction expertise TBD

Whether self-performed or subcontracted, the Baggage Belt System Contractor is the entity responsible for constructing the Baggage Belt System infrastructure including:

- All motorized Baggage Belts
- Controls
- IT/Comm Equipment
- Any other improvements as delineated in the project scope of work

The offeror and/or offeror's Baggage Belt System Contractor shall demonstrate extensive Baggage Belt System construction skills and experience, to include the successful completion of five (5), Baggage Belt System projects within the past 5 years.

For the five project examples provided, the offeror shall include:

a.The project location

b.Client name

c.Key contact person, address, telephone number and email address

d.Identification of Offeror or *Baggage Belt System Contractor*'s role in the project

e.Project budget and final construction cost

f.Schedule completion deadline and actual completion date

g.A detailed summary of each project

h.Providing graphic images of similar projects is encouraged

Baggage Belt System Contractor **qualifications** are established for this project to assure the quality of the Baggage Belt System construction necessary to perform quality work as solely determined by the Owner. The purpose of such quality assurance is to protect the

public safety and security.

***Client reference check**: For the five projects listed, client contacts will be asked to evaluate the offeror performance according to the following criteria. Offerors shall provide up-to-date Client Contact Information. The Owner will communicate with the contacts provided in order to evaluate experience and performance. Failure to do so will result in zero point for this evaluation factor. No partial points will be awarded.*

REFERENCE NOTICE

The offeror is responsible for ensuring the accuracy of the contact information for the references provided. **The City shall not contact the offeror** for replacement references and/or contact information if said e-mail addresses or telephones numbers are not valid or connected.

In addition to the above, the Offeror is encouraged to inform said references that they shall initially be contacted via e-mail at the e-mail address provided herein. If a response to the e-mail is not provided within the designated time frame, the City will attempt to contact the reference by telephone at the number provided below. If the reference does not respond after two attempts via telephone the offeror shall receive zero points for said reference.

D. Competitive Sealed Proposal Evaluation/Appeal Process.

1. **Ranking offers**. All proposals will be ranked based on section C by the City of El Paso. The final rankings will then be forwarded to the City Manager for approval.
2. **Authorization to negotiate**. The City Manager shall review the final ranking. The City will start negotiating with the highest-ranking Offeror (the "Selected Offeror") only upon authorization from the City Manager. Upon reviewing written notice from the City of El Paso said negotiations must be completed within 30 days. If negotiations cannot be completed in 30 days the City will end negotiations and negotiate in order of ranking.
3. **Notice of Initial Ranking and filing protests**. The Offerors will be notified in writing (by fax, email or regular mail) of the final ranking. The ranking shall be sent with the notice and shall show the order of the ranking and points received by each Offeror. Offerors shall have three city working days from the day of their receipt of the notice to challenge the ranking by filing a protest with the City's Purchasing Director. The protest shall state the basis for the challenge of the ranking. **All Offerors will be notified of any protests filed.**
4. **Review of protests**. The Purchasing Director will review the validity of the protest regarding the ranking and make a recommendation to the City Manager. The City Manager will review the rankings and Purchasing Director's recommendation and (1) approve the rankings and the Selected Offeror, (2) direct CIP staff to reconsider the rankings or (3) take other appropriate action in compliance with state laws and the City's purchasing policies.
5. **Notice of results of review and new ranking.** <u>All Offerors shall be given notice of the City Manager's determination upon completion of the review of the protest</u>. If

reconsideration of the ranking is not required by the City Manager, the ranking shall be final as of the date of the City Manager's determination and no further protest shall be allowed.

If reconsideration of the ranking is required, notice of the results of the reconsideration of the ranking shall be provided to all Offerors.

6. **Protesting the new ranking** All Offerors may protest the re-ranking of the Offerors following the same process as set forth above.
7. **Scope of negotiations** City staff will negotiate with the Selected Offeror and may discuss options for scope or time modifications to the proposed contract and any price change associated with the modifications.
8. **Reaching agreement or terminating selection process** If the City staff and the Selected Offeror do not reach an agreement within thirty consecutive calendar days of the date the Selected Offeror received notice of the final ranking, the Selected Offeror shall be notified in writing that negotiations are terminated and the Offeror shall not be permitted to enter into a contract with the City. The decision of the City to terminate negotiations is final and not subject to protest or appeal.
9. **City Council approval of contract**. The Capital Improvement and Purchasing & Strategic Sourcing Departments shall recommend to Council that the contract be awarded to the highest ranked Offeror with whom the City was able to reach an agreement on the terms and conditions of the negotiated contract

COMPETITIVE SEALED PROPOSAL

TO THE HONORABLE MAYOR AND CITY COUNCIL
CITY OF EL PASO
EL PASO, TEXAS

The undersigned having familiarized themselves with the local conditions affecting the cost of work and with the Contract documents consisting of Invitation to Bid, Instructions to Bidders, General Conditions, the Contractor's Bid, Special Bid Conditions, Applicable Wage Rates, the Contract Form, plans, specifications, drawings, and addenda on file in the Purchasing & Strategic Sourcing Department of the City of El Paso, hereby propose to perform everything required to be performed and to provide, furnish and install all the labor, materials, necessary tools, expendable equipment, and all utility and transportation services, and to complete in a workmanlike manner all the work required for the

EPIA Checked Baggage Inspection System

Solicitation No. 2016-963

within the specified limits and in accordance with the plans, including **Addenda numbers**

AMENDMENT	DATED	AMENDMENT	DATED	AMENDMENT	DATED	AMENDMENT	DATED
A001	_____	A002	_____	A003	_____	A004	_____
A005	_____	A006	_____	A007	_____	A008	_____

AT THE FOLLOWING LUMP SUM:

ONLY ONE OFFEROR MAY BE AWARDED THIS CONTRACT PURSUANT TO THIS PROPOSAL.

Note: The offeror who provides the best value for the owner based on the selection criteria and on its ranking evaluation (highest ranked) will be awarded the contract.

SUM TOTAL BASE BID: $_____

COMPANY NAME: _____

OFFEROR'S SIGNATURE: _____ PRINT NAME: _____

CONTRACT TIME AND LIQUIDATED DAMAGES

Offeror agrees to commence work on a date to be specified in a written "Notice to Proceed" issued by the Owner. The Contract Time shall begin on the date to commence work specified in the "Notice to Proceed" and shall run for **six hundred (600)** additional CONSECUTIVE CALENDAR DAYS thereafter. Offeror shall Substantially Complete the project within **five hundred seventy (570)** CONSECUTIVE CALENDAR DAYS after the date to commence work in the "Notice to Proceed." –Offeror agrees to pay, as liquidated damages, the sum of **two thousand ten dollars and zero cents ($2,010.00)** for each consecutive calendar day after the date of Substantial Completion, as hereinafter provided in the General Conditions. Offeror further agrees to pay as liquidated damages the sum of **one thousand seven hundred sixty dollars and zero cents ($1,760.00)** for each consecutive calendar day after the expiration of the Contract Time for Remaining Work, as provided in Paragraph 6.8.3.1 of the General Conditions.

PROPOSAL

Enclosed with this proposal is a bid bond for five percent (5%) of the TOTAL bid price including base bid(s), alternate(s) and option(s) which is agreed shall be collected and retained by the owner(s) as liquidated damages in the event this proposal is accepted by the Owner within ninety (90) consecutive calendar days after the date advised for the reception of bids and the undersigned fails to execute the contract and the required performance and payment bonds with the Owner within fourteen (14) consecutive calendar days after the date said proposal is accepted; otherwise, the said bid security shall be returned to the undersigned upon demand.

THE UNDERSIGNED OFFEROR REPRESENTS TO THE CITY AND TO THE OTHER OFFERORS THAT HIS/HER PROPOSAL, AND THE ESTIMATES ON WHICH IT IS BASED, HAS BEEN CAREFULLY CHECKED AND CONTAINS NO ERRORS, AND NOTHING HAS BEEN OMITTED OR OVERLOOKED IN DETERMINING THE AMOUNTS OFFERED.

OFFEROR'S NAME: _____
(AS IT APPEARS ON ORGANIZATION CERTIFICATE ISSUED BY STATE IN WHICH COMPANY WAS ORGANIZED)

BY: _____ _____
Signature Date

_____ _____ _____
Print Signer's name & title Telephone Fax

_____ _____
Address City, State, Zip Code

_____ _____ _____
eMail address Physical Address of Business (if different from above) City, State, Zip Code

IF THE OFFEROR BE A CORPORATION, THE FOLLOWING CERTIFICATE SHOULD BE EXECUTED:

I, _____, certify that I am the _____ Secretary of the corporation named as Offeror hereinabove; that _____, who signed the aforegoing contract on behalf of the Offeror, was then _____ of said corporation; that said proposal was duly signed for and in behalf of said corporation by authority of its governing body, and is within the scope of its corporate powers.

_____
CORPORATE SECRETARY SIGNATURE AND CORPORATE SEAL

THE STATE OF TEXAS }
COUNTY OF EL PASO }

SURETY'S NO.

BID BOND

KNOW ALL MEN BY THESE PRESENTS, that _____, (hereinafter called the Principal), as Principal, and _____ as Surety, are hereby held and firmly bound unto THE CITY OF EL PASO, as Owner/Obligee (hereafter "Owner"), in the penal sum of _____. _____for the payment of which, well and truly to be made, we hereby jointly and severally bind ourselves, our heirs, executors, administrators, successors and assigns.

SIGNED, this _____ day of _____, 20_____.

The conditions of the above obligation are such that whereas the Principal has submitted to the City of El Paso a certain bid, attached hereto and hereby made a part hereof, to enter into a contract in writing for the **EPIA Checked Baggage Inspection System, Solicitation No. 2016-963.** NOW, THEREFORE,

a) If said bid shall be rejected, or in the alternate,

b) If said bid shall be accepted and within fourteen (14) consecutive calendar days after the Principal has received notice of his acceptance, the Principal shall properly complete, execute, and deliver insurance certificates and a contract in the form approved by the Owner and shall furnish a bond for his faithful performance of said contract, and for the payment of all persons performing labor or furnishing materials in connection therewith, and shall in all other respects perform the agreement created by the acceptance of said Bid, then this obligation shall be void; otherwise the same shall remain in force and effect, it being expressly understood and agree that the liability of the Surety for any and all claims hereunder shall, in no event, exceed the penal amount of this obligation, as herein stated.

The Surety, for value received, hereby stipulates and agrees that the obligations of said Surety and its bond shall be in no way impaired or affected by any extension of the time within which the OWNER MAY ACCEPT such bid, such extension to be upon notice to the Surety by the Principal.

IN WITNESS, WHEREOF, the Principal and the Surety have hereunto set their hands and seals, and such of them as are corporations have caused their corporate seals to be hereto affixed and these presents to be signed by their proper officers, the day and year first set forth above.

_____	_____ (Seal)
Principal • Company Name	Signed by (Principal Agent)
_____	_____
Address	Principal Agent's Name (Printed or Typed)
_____	_____ _____
City, State, Zip Code	Telephone No. Fax No.
_____	_____ (Seal)
Surety • Company Name	Signed by (Surety Agent)
_____	_____
Address	Surety Agent's Name (Printed or Typed)
_____	_____ _____
City, State, Zip Code	Telephone No. Fax No.

USE BID BOND FORM ON

PAGE I-D-1

DO NOT SUBSTITUTE BID BOND FORM

NOTE:

THE BID BOND MUST BE SIGNED & SEALED

BY BOTH THE SURETY & THE PRINCIPAL

AGENT RESIDENT DESIGNATION

EPIA Checked Baggage Inspection System
SOLICITATION NO. 2016-963

SURETY INFORMATION

_____, as Surety on the Bid Bond for this contract, hereby appoints the following resident agent who resides within the County of El Paso and to whom any requisite notices may be delivered and on whom service of process may be had in matters arising out of suretyship, pursuant to Section 3503.003 of the Texas Insurance Code and Chapter 2253, Texas Government Code.

Assigned By:

_____(Seal)
Surety Agent

_____
Surety Agent's Signature

_____
Date

AGENT INFORMATION

Agent Resident: _____

Business Address:_____

_____

Telephone & Fax Nos. _____

Acknowledged By:

_____
Agent Resident's Name (Printed or Typed)

_____
Agent Resident's Signature

SUPPLEMENTAL BIDDER INFORMATION
Part I

EPIA Checked Baggage Inspection System

SOLICITATION No. 2016-963

1. The legal name and the business address of the bidder are:

_____

_____

2. The bidder is doing business as a: _____ *(Sole Proprietorship, Corporation, Joint Venture, Partnership, Limited Partnership, Limited Liability Company, etc.)* organized in the County of _____, State of _____,
(Name of State)

and is ☐ publicly / ☐ privately owned.

3. Race or ethnic group designation of bidder. Enter race or ethnic group in the appropriate line:

☐ Black ☐ Hispanic ☐ Oriental ☐ American Indian
☐ Eskimo ☐ Aleut ☐ White ☐ Pacific Islander

4. The name, title and address of the owner, partner, or officers of the bidder are:

NAME TITLE ADDRESS

_____

_____

_____

5. The names and addresses of all other persons, both natural and corporate, having a substantial interest in the bidder, and the nature of the interest are:

NAME TITLE NATURE OF INTEREST

_____

_____

_____

6. The names, addresses and trade classifications of all other building construction contractors in which the bidder has a substantial interest are:

NAME TITLE TRADE CLASSIFICATION

_____

_____

_____

SUPPLEMENTAL BIDDER INFORMATION
PART II

SUBCONTRACTOR AND/OR SUPPLIER IDENTIFICATION

EPIA Checked Baggage Inspection System

SOLICITATION No. 2016-963 **BIDDER: _____**

The Bidder shall indicate below the name of each subcontractor and/or supplier the bidder will use in the performance of the contract. The Bidder shall specify the work to be performed by the subcontractor or the materials to be provided by the supplier, the amount of the subcontract or purchase order, and the percentage of the contract the Bidder will expand throughout the life of the project. **Any changes in subcontractor and/or supplier listed below shall require additional approval prior to contract execution.**

NOTE: Subcontractors listed in Reference Section must appear on this list.

Name & Address	**Service / Supplies**	**$ Value**	**% of Contract**
	TOTAL:		
		(Dollars)	(% of Contract)

SUPPLEMENTAL BIDDERS INFORMATION
PART III

STATEMENT OF INCORPORATED MATERIALS

EPIA Checked Baggage Inspection System

SOLICITATION No. 2016-963 **BIDDER**: _____

The successful Bidder shall be required to pay state sales tax on materials not incorporated into the completed project. Materials not incorporated into the completed project include, but are not limited to, the purchase, rental or lease of tools, machinery and equipment used in the performance of the awarded contract.

The Successful Bidder may be required to pay state sales tax on consumables used in construction contracts. Consumables are items used or consumed by a contractor on a project such as, but not limited to, non-reusable concrete forms, masking tape, corrugated cardboard, natural gas, and electricity.

It is the obligation of the Bidder to ascertain the amount of state sales tax to be paid and to include this amount in his/her bid submitted to the Owner.

The Successful Bidder is not required to pay state sales tax on materials incorporated into the completed project such as mortar, bricks, nails and caulk which are annexed to and become part of the completed project.

The State of Texas requires a "separated contract" for tax exemption purposes. The Bidder must separate or identify the amount of incorporated materials to be used in the completed project that are not subject to state sales tax. This form complies with the requirement.

The amounts entered for base bids, alternates and unit prices are the agreed contract prices for *incorporated materials which are not subject to state sales tax*

Base Bid $ _____

[SEE NEXT PAGE FOR DEFINITIONS]

DEFINITIONS

SMALL BUSINESS CONCERN:
Less than $1,000,000.00 in annual receipts or fewer than one hundred [100] full time employees.

DISADVANTAGED BUSINESS ENTERPRISE:
At least fifty-one percent [51%] owned by one or more socially disadvantaged individuals, or a publicly held corporation with at least fifty-one percent [51%] of the stock owned by one or more such individuals.

WOMAN-OWNED BUSINESS:
At least fifty-one percent [51%] owned by a woman, or women, who also control and operate the business. "Control" in this context means making policy decisions. "Operate" in this context means actively carrying on day to day management

HANDICAPPED:
At least fifty-one percent [51%] owned by a person or persons with an orthopedic, otic [hearing], optic [visual], or mental impairment which substantially limits one or more of their major life activities.

LOCAL BUSINESS:
A business with a Tier 1 or Tier 2 principal place of business within the incorporated city limits of El Paso, Texas.

HUB [HISTORICALLY UNDERUTILIZED BUSINESS]
A Business Enterprise, which has been granted a Certificate by the State of Texas, as a Historically Underutilized Business. The City of El Paso utilizes information on Historically Underutilized Businesses (HUB), from the State of Texas Comptroller of Public Accounts (CPA), HUB Program, 1711 San Jacinto Ave. P.O. Box 13186, Austin, Texas 78711. The City encourages you to contact the State on the HUB program, if you feel you may qualify.

I certify that the foregoing information is a full, true and correct statement of the facts. I understand that my failure to respond to three (3) solicitations for any one class of items could cause the City of El Paso Purchasing and Strategic Sourcing Department to discontinue sending solicitations for that particular class. I also understand it is my responsibility to inform City of El Paso Purchasing and Strategic Sourcing Department in writing of any changes to this application; i.e., change of address, change of class etc. The City of El Paso does not guarantee you will receive all solicitations in your business categories. Notices of Solicitations are posted in the Purchasing and Strategic Sourcing Department, at the Chamber of Commerce, El Paso Hispanic Chamber of Commerce and at The Procurement Outreach Center, as well as being published in the official designated newspaper.

_____
Signature of Person Authorized to Sign Application

_____
Title Date

Purchasing and Strategic Sourcing Department

AFFIDAVIT

THIS IS AN OFFICIAL PURCHASING AND STRATEGIC SOURCING DEPARTMENT DOCUMENT – RETAIN WITH BID FILE

Before me, the undersigned official, on this day, personally appeared _____, a person known to me to be the person whose signature appears below, whom after being duly sworn upon his/her oath deposed and said:

1. My name is _____. I am over the age of 18, have never been convicted of a crime and am competent to make this affidavit.

2. I am an authorized representative of the following company or Firm:_____
_____

3. Listed below are all the names the company/firm uses and has used in the past and I attest that all such names describe the company currently submitting a response to Solicitation No. _____.

_____

_____

_____

_____

4. In addition to completing this Affidavit, I have included a copy of the Organization Certificate issued by the Secretary of State of the state in which the company was organized and if using a trade name in the solicitation documents other than the name under which the company was organized, a copy of the Assumed Name Certificate/DBA Certificate from the County.

5. **Note: This bidder understands that by providing false information on this Affidavit, it may be considered a non-responsible bidder on this and future solicitations and may result in discontinuation of any/all business with the City of El Paso.**

_____
Signature

SUBSCRIBED AND SWORN to before me on this _____ day of _____, _____.

_____
NOTARY PUBLIC

_____
PRINT NAME

_____
MY COMMISSION EXPIRES

City Of El Paso
Purchasing and Strategic Sourcing Department

INDEBTEDNESS AFFIDAVIT

THIS IS AN OFFICIAL PURCHASING AND STRATEGIC SOURCING DEPARTMENT DOCUMENT – RETAIN WITH PURCHASE ORDER FILE

Before me, the undersigned authority, on this day personally appeared _____ [FULL NAME] (hereafter "***Affiant***"), a person known to me to be the person whose signature appears below, whom after being duly sworn upon his/her oath deposed stated as follows:

1. Affiant is authorized and competent to give this affidavit and has personal knowledge of the facts and matters herein stated.

2. Affiant is an authorized representative of the following company or firm: _____ [*Contracting Entity's Corporate or Legal Name*] (hereafter, "***Contracting Entity***").

3. Affiant is submitting this affidavit in response to the following bid: _____ ___ [*Solicitation No. and Solicitation Name*] which is expected to be in an amount that exceeds $25,000.

4. Contracting Entity is organized as a business entity as noted below (check box as applicable):

For Profit Entity (select below):

- ☐ Sole Proprietorship
- ☐ Corporation
- ☐ Partnership
- ☐ Limited Partnership
- ☐ Joint Venture
- ☐ Limited Liability Company
- ☐ Other (Specify type in space provided below):

_____

For Non-Profit Entity (select below):

- ☐Non-Profit Corporation
- ☐Unincorporated Association

5. The information shown below is true and correct for the Contracting Entity and all owners of 5% or more of the Contracting Entity and, where the Contracting Entity is a non-profit entity, the required information has been shown for each officer. [Note: In all cases, use FULL name, business and residence addresses and telephone numbers.]

Contracting Entity:

Name	
Business Address [No./Street]	

City/State/Zip Code	
Telephone Number	
Resident Address (if applicable)	
City/State/Zip Code	
Telephone Number	
Federal Tax ID Number	
Texas Sales Tax Number	

5% Owner(s) (If none, state "None"):**

Name	
Business Address [No./Street]	
City/State/Zip Code	
Telephone Number	
Resident Address (if applicable)	
City/State/Zip Code	
Telephone Number	

**Attach additional pages if necessary to supply the required names and addresses.

6. Affiant understands that in accordance with Ordinance No. 016529 of the City of El Paso (the "***City***"), the City may refuse to award a contract to or enter into a transaction with an apparent low bidder or successful proposer that is indebted to the City.

7. Affiant understands that the term "***Debt***" shall mean any sum of money, which is owed to the City by a Contracting Entity, Owner, or Vendor, that exceeds one hundred dollars ($100.00) and that has become Delinquent, as defined hereinafter. Such Debt shall include but not be limited to: (i) property taxes; (ii) hotel/motel occupancy taxes; and (iii) license and permit fees.

8. Affiant understands that the term "***Delinquent***" shall mean any unpaid Debt that is past due for sixty (60) days or more and, which is not currently subject to challenge, protest, or appeal.

9. Affiant represents that to the best of its knowledge, the Contracting Entity is not indebted to the City in any amounts as described in Item No. 7 above, as of the date of the submittal. If the Contracting Entity is indebted to the City, the following represents the type and estimated amount of indebtedness:

   _____

   _____

10. If the Contracting Entity is indebted to the City, describe any payment arrangements that have been entered into to settle the Debt.

    _____

    _____

    _____

11. In the event that the City refuses to do business with a Contracting Entity due to any indebtedness listed above or as determined by the City Financial Services Department, the Contracting Agency may appeal this determination in accordance with the appeal regulations in Ordinance 016529.

Affiant certifies that he is duly authorized to submit the above information on behalf of the Contracting Entity, that Affiant is associated with the Contracting Entity in the capacity noted above and has personal knowledge of the accuracy of the information provided herein; and that the information provided herein is true and correct to the best of Affiant's knowledge and belief. Affiant understands that providing false information on this form shall be grounds for debarment and discontinuation of any/all business with the City of El Paso.

_____
Signature

SUBSCRIBED AND SWORN to before me on this _____ day of _____, 20_____.

_____
Notary Public

_____
Printed Name

_____
Commission Expires

Form **W-9**
(Rev. December 2014)
Department of the Treasury
Internal Revenue Service

Request for Taxpayer Identification Number and Certification

Give Form to the requester. Do not send to the IRS.

Print or type
See **Specific Instructions** on page 2.

1 Name (as shown on your income tax return). Name is required on this line; do not leave this line blank.

2 Business name/disregarded entity name, if different from above

3 Check appropriate box for federal tax classification; check only **one** of the following seven boxes:
☐ Individual/sole proprietor or single-member LLC ☐ C Corporation ☐ S Corporation ☐ Partnership ☐ Trust/estate
☐ Limited liability company. Enter the tax classification (C=C corporation, S=S corporation, P=partnership) ▶ _____
Note. For a single-member LLC that is disregarded, do not check LLC; check the appropriate box in the line above for the tax classification of the single-member owner.
☐ Other (see instructions) ▶

4 Exemptions (codes apply only to certain entities, not individuals; see instructions on page 3):
Exempt payee code (if any) _____
Exemption from FATCA reporting code (if any) _____
(Applies to accounts maintained outside the U.S.)

5 Address (number, street, and apt. or suite no.)

Requester's name and address (optional)

6 City, state, and ZIP code

7 List account number(s) here (optional)

Part I Taxpayer Identification Number (TIN)

Enter your TIN in the appropriate box. The TIN provided must match the name given on line 1 to avoid backup withholding. For individuals, this is generally your social security number (SSN). However, for a resident alien, sole proprietor, or disregarded entity, see the Part I instructions on page 3. For other entities, it is your employer identification number (EIN). If you do not have a number, see *How to get a TIN* on page 3.

Note. If the account is in more than one name, see the instructions for line 1 and the chart on page 4 for guidelines on whose number to enter.

Social security number
☐☐☐ – ☐☐ – ☐☐☐☐

or

Employer identification number
☐☐ – ☐☐☐☐☐☐☐

Part II Certification

Under penalties of perjury, I certify that:

1. The number shown on this form is my correct taxpayer identification number (or I am waiting for a number to be issued to me); and
2. I am not subject to backup withholding because: (a) I am exempt from backup withholding, or (b) I have not been notified by the Internal Revenue Service (IRS) that I am subject to backup withholding as a result of a failure to report all interest or dividends, or (c) the IRS has notified me that I am no longer subject to backup withholding; and
3. I am a U.S. citizen or other U.S. person (defined below); and
4. The FATCA code(s) entered on this form (if any) indicating that I am exempt from FATCA reporting is correct.

Certification instructions. You must cross out item 2 above if you have been notified by the IRS that you are currently subject to backup withholding because you have failed to report all interest and dividends on your tax return. For real estate transactions, item 2 does not apply. For mortgage interest paid, acquisition or abandonment of secured property, cancellation of debt, contributions to an individual retirement arrangement (IRA), and generally, payments other than interest and dividends, you are not required to sign the certification, but you must provide your correct TIN. See the instructions on page 3.

Sign Here **Signature of U.S. person ▶** **Date ▶**

General Instructions

Section references are to the Internal Revenue Code unless otherwise noted.

Future developments. Information about developments affecting Form W-9 (such as legislation enacted after we release it) is at *www.irs.gov/fw9*.

Purpose of Form

An individual or entity (Form W-9 requester) who is required to file an information return with the IRS must obtain your correct taxpayer identification number (TIN) which may be your social security number (SSN), individual taxpayer identification number (ITIN), adoption taxpayer identification number (ATIN), or employer identification number (EIN), to report on an information return the amount paid to you, or other amount reportable on an information return. Examples of information returns include, but are not limited to, the following:

- Form 1099-INT (interest earned or paid)
- Form 1099-DIV (dividends, including those from stocks or mutual funds)
- Form 1099-MISC (various types of income, prizes, awards, or gross proceeds)
- Form 1099-B (stock or mutual fund sales and certain other transactions by brokers)
- Form 1099-S (proceeds from real estate transactions)
- Form 1099-K (merchant card and third party network transactions)
- Form 1098 (home mortgage interest), 1098-E (student loan interest), 1098-T (tuition)
- Form 1099-C (canceled debt)
- Form 1099-A (acquisition or abandonment of secured property)

Use Form W-9 only if you are a U.S. person (including a resident alien), to provide your correct TIN.

If you do not return Form W-9 to the requester with a TIN, you might be subject to backup withholding. See *What is backup withholding?* on page 2.

By signing the filled-out form, you:

1. Certify that the TIN you are giving is correct (or you are waiting for a number to be issued),

2. Certify that you are not subject to backup withholding, or

3. Claim exemption from backup withholding if you are a U.S. exempt payee. If applicable, you are also certifying that as a U.S. person, your allocable share of any partnership income from a U.S. trade or business is not subject to the withholding tax on foreign partners' share of effectively connected income, and

4. Certify that FATCA code(s) entered on this form (if any) indicating that you are exempt from the FATCA reporting, is correct. See *What is FATCA reporting?* on page 2 for further information.

Note. If you are a U.S. person and a requester gives you a form other than Form W-9 to request your TIN, you must use the requester's form if it is substantially similar to this Form W-9.

Definition of a U.S. person. For federal tax purposes, you are considered a U.S. person if you are:

- An individual who is a U.S. citizen or U.S. resident alien;
- A partnership, corporation, company, or association created or organized in the United States or under the laws of the United States;
- An estate (other than a foreign estate); or
- A domestic trust (as defined in Regulations section 301.7701-7).

Special rules for partnerships. Partnerships that conduct a trade or business in the United States are generally required to pay a withholding tax under section 1446 on any foreign partners' share of effectively connected taxable income from such business. Further, in certain cases where a Form W-9 has not been received, the rules under section 1446 require a partnership to presume that a partner is a foreign person, and pay the section 1446 withholding tax. Therefore, if you are a U.S. person that is a partner in a partnership conducting a trade or business in the United States, provide Form W-9 to the partnership to establish your U.S. status and avoid section 1446 withholding on your share of partnership income.

In the cases below, the following person must give Form W-9 to the partnership for purposes of establishing its U.S. status and avoiding withholding on its allocable share of net income from the partnership conducting a trade or business in the United States:

- In the case of a disregarded entity with a U.S. owner, the U.S. owner of the disregarded entity and not the entity;
- In the case of a grantor trust with a U.S. grantor or other U.S. owner, generally, the U.S. grantor or other U.S. owner of the grantor trust and not the trust; and
- In the case of a U.S. trust (other than a grantor trust), the U.S. trust (other than a grantor trust) and not the beneficiaries of the trust.

Foreign person. If you are a foreign person or the U.S. branch of a foreign bank that has elected to be treated as a U.S. person, do not use Form W-9. Instead, use the appropriate Form W-8 or Form 8233 (see Publication 515, Withholding of Tax on Nonresident Aliens and Foreign Entities).

Nonresident alien who becomes a resident alien. Generally, only a nonresident alien individual may use the terms of a tax treaty to reduce or eliminate U.S. tax on certain types of income. However, most tax treaties contain a provision known as a "saving clause." Exceptions specified in the saving clause may permit an exemption from tax to continue for certain types of income even after the payee has otherwise become a U.S. resident alien for tax purposes.

If you are a U.S. resident alien who is relying on an exception contained in the saving clause of a tax treaty to claim an exemption from U.S. tax on certain types of income, you must attach a statement to Form W-9 that specifies the following five items:

1. The treaty country. Generally, this must be the same treaty under which you claimed exemption from tax as a nonresident alien.
2. The treaty article addressing the income.
3. The article number (or location) in the tax treaty that contains the saving clause and its exceptions.
4. The type and amount of income that qualifies for the exemption from tax.
5. Sufficient facts to justify the exemption from tax under the terms of the treaty article.

Example. Article 20 of the U.S.-China income tax treaty allows an exemption from tax for scholarship income received by a Chinese student temporarily present in the United States. Under U.S. law, this student will become a resident alien for tax purposes if his or her stay in the United States exceeds 5 calendar years. However, paragraph 2 of the first Protocol to the U.S.-China treaty (dated April 30, 1984) allows the provisions of Article 20 to continue to apply even after the Chinese student becomes a resident alien of the United States. A Chinese student who qualifies for this exception (under paragraph 2 of the first protocol) and is relying on this exception to claim an exemption from tax on his or her scholarship or fellowship income would attach to Form W-9 a statement that includes the information described above to support that exemption.

If you are a nonresident alien or a foreign entity, give the requester the appropriate completed Form W-8 or Form 8233.

Backup Withholding

What is backup withholding? Persons making certain payments to you must under certain conditions withhold and pay to the IRS 28% of such payments. This is called "backup withholding." Payments that may be subject to backup withholding include interest, tax-exempt interest, dividends, broker and barter exchange transactions, rents, royalties, nonemployee pay, payments made in settlement of payment card and third party network transactions, and certain payments from fishing boat operators. Real estate transactions are not subject to backup withholding.

You will not be subject to backup withholding on payments you receive if you give the requester your correct TIN, make the proper certifications, and report all your taxable interest and dividends on your tax return.

Payments you receive will be subject to backup withholding if:

1. You do not furnish your TIN to the requester,
2. You do not certify your TIN when required (see the Part II instructions on page 3 for details),
3. The IRS tells the requester that you furnished an incorrect TIN,
4. The IRS tells you that you are subject to backup withholding because you did not report all your interest and dividends on your tax return (for reportable interest and dividends only), or
5. You do not certify to the requester that you are not subject to backup withholding under 4 above (for reportable interest and dividend accounts opened after 1983 only).

Certain payees and payments are exempt from backup withholding. See *Exempt payee code* on page 3 and the separate Instructions for the Requester of Form W-9 for more information.

Also see *Special rules for partnerships* above.

What is FATCA reporting?

The Foreign Account Tax Compliance Act (FATCA) requires a participating foreign financial institution to report all United States account holders that are specified United States persons. Certain payees are exempt from FATCA reporting. See *Exemption from FATCA reporting code* on page 3 and the Instructions for the Requester of Form W-9 for more information.

Updating Your Information

You must provide updated information to any person to whom you claimed to be an exempt payee if you are no longer an exempt payee and anticipate receiving reportable payments in the future from this person. For example, you may need to provide updated information if you are a C corporation that elects to be an S corporation, or if you no longer are tax exempt. In addition, you must furnish a new Form W-9 if the name or TIN changes for the account; for example, if the grantor of a grantor trust dies.

Penalties

Failure to furnish TIN. If you fail to furnish your correct TIN to a requester, you are subject to a penalty of $50 for each such failure unless your failure is due to reasonable cause and not to willful neglect.

Civil penalty for false information with respect to withholding. If you make a false statement with no reasonable basis that results in no backup withholding, you are subject to a $500 penalty.

Criminal penalty for falsifying information. Willfully falsifying certifications or affirmations may subject you to criminal penalties including fines and/or imprisonment.

Misuse of TINs. If the requester discloses or uses TINs in violation of federal law, the requester may be subject to civil and criminal penalties.

Specific Instructions

Line 1

You must enter one of the following on this line; **do not** leave this line blank. The name should match the name on your tax return.

If this Form W-9 is for a joint account, list first, and then circle, the name of the person or entity whose number you entered in Part I of Form W-9.

a. **Individual.** Generally, enter the name shown on your tax return. If you have changed your last name without informing the Social Security Administration (SSA) of the name change, enter your first name, the last name as shown on your social security card, and your new last name.

Note. ITIN applicant: Enter your individual name as it was entered on your Form W-7 application, line 1a. This should also be the same as the name you entered on the Form 1040/1040A/1040EZ you filed with your application.

b. **Sole proprietor or single-member LLC.** Enter your individual name as shown on your 1040/1040A/1040EZ on line 1. You may enter your business, trade, or "doing business as" (DBA) name on line 2.

c. **Partnership, LLC that is not a single-member LLC, C Corporation, or S Corporation.** Enter the entity's name as shown on the entity's tax return on line 1 and any business, trade, or DBA name on line 2.

d. **Other entities.** Enter your name as shown on required U.S. federal tax documents on line 1. This name should match the name shown on the charter or other legal document creating the entity. You may enter any business, trade, or DBA name on line 2.

e. **Disregarded entity.** For U.S. federal tax purposes, an entity that is disregarded as an entity separate from its owner is treated as a "disregarded entity." See Regulations section 301.7701-2(c)(2)(iii). Enter the owner's name on line 1. The name of the entity entered on line 1 should never be a disregarded entity. The name on line 1 should be the name shown on the income tax return on which the income should be reported. For example, if a foreign LLC that is treated as a disregarded entity for U.S. federal tax purposes has a single owner that is a U.S. person, the U.S. owner's name is required to be provided on line 1. If the direct owner of the entity is also a disregarded entity, enter the first owner that is not disregarded for federal tax purposes. Enter the disregarded entity's name on line 2, "Business name/disregarded entity name." If the owner of the disregarded entity is a foreign person, the owner must complete an appropriate Form W-8 instead of a Form W-9. This is the case even if the foreign person has a U.S. TIN.

Line 2

If you have a business name, trade name, DBA name, or disregarded entity name, you may enter it on line 2.

Line 3

Check the appropriate box in line 3 for the U.S. federal tax classification of the person whose name is entered on line 1. Check only one box in line 3.

Limited Liability Company (LLC). If the name on line 1 is an LLC treated as a partnership for U.S. federal tax purposes, check the "Limited Liability Company" box and enter "P" in the space provided. If the LLC has filed Form 8832 or 2553 to be taxed as a corporation, check the "Limited Liability Company" box and in the space provided enter "C" for C corporation or "S" for S corporation. If it is a single-member LLC that is a disregarded entity, do not check the "Limited Liability Company" box; instead check the first box in line 3 "Individual/sole proprietor or single-member LLC."

Line 4, Exemptions

If you are exempt from backup withholding and/or FATCA reporting, enter in the appropriate space in line 4 any code(s) that may apply to you.

Exempt payee code.

- Generally, individuals (including sole proprietors) are not exempt from backup withholding.
- Except as provided below, corporations are exempt from backup withholding for certain payments, including interest and dividends.
- Corporations are not exempt from backup withholding for payments made in settlement of payment card or third party network transactions.
- Corporations are not exempt from backup withholding with respect to attorneys' fees or gross proceeds paid to attorneys, and corporations that provide medical or health care services are not exempt with respect to payments reportable on Form 1099-MISC.

The following codes identify payees that are exempt from backup withholding. Enter the appropriate code in the space in line 4.

1—An organization exempt from tax under section 501(a), any IRA, or a custodial account under section 403(b)(7) if the account satisfies the requirements of section 401(f)(2)

2—The United States or any of its agencies or instrumentalities

3—A state, the District of Columbia, a U.S. commonwealth or possession, or any of their political subdivisions or instrumentalities

4—A foreign government or any of its political subdivisions, agencies, or instrumentalities

5—A corporation

6—A dealer in securities or commodities required to register in the United States, the District of Columbia, or a U.S. commonwealth or possession

7—A futures commission merchant registered with the Commodity Futures Trading Commission

8—A real estate investment trust

9—An entity registered at all times during the tax year under the Investment Company Act of 1940

10—A common trust fund operated by a bank under section 584(a)

11—A financial institution

12—A middleman known in the investment community as a nominee or custodian

13—A trust exempt from tax under section 664 or described in section 4947

The following chart shows types of payments that may be exempt from backup withholding. The chart applies to the exempt payees listed above, 1 through 13.

IF the payment is for . . .	THEN the payment is exempt for . . .
Interest and dividend payments	All exempt payees except for 7
Broker transactions	Exempt payees 1 through 4 and 6 through 11 and all C corporations. S corporations must not enter an exempt payee code because they are exempt only for sales of noncovered securities acquired prior to 2012.
Barter exchange transactions and patronage dividends	Exempt payees 1 through 4
Payments over $600 required to be reported and direct sales over $5,000[1]	Generally, exempt payees 1 through 5[2]
Payments made in settlement of payment card or third party network transactions	Exempt payees 1 through 4

[1] See Form 1099-MISC, Miscellaneous Income, and its instructions.

[2] However, the following payments made to a corporation and reportable on Form 1099-MISC are not exempt from backup withholding: medical and health care payments, attorneys' fees, gross proceeds paid to an attorney reportable under section 6045(f), and payments for services paid by a federal executive agency.

Exemption from FATCA reporting code. The following codes identify payees that are exempt from reporting under FATCA. These codes apply to persons submitting this form for accounts maintained outside of the United States by certain foreign financial institutions. Therefore, if you are only submitting this form for an account you hold in the United States, you may leave this field blank. Consult with the person requesting this form if you are uncertain if the financial institution is subject to these requirements. A requester may indicate that a code is not required by providing you with a Form W-9 with "Not Applicable" (or any similar indication) written or printed on the line for a FATCA exemption code.

A—An organization exempt from tax under section 501(a) or any individual retirement plan as defined in section 7701(a)(37)

B—The United States or any of its agencies or instrumentalities

C—A state, the District of Columbia, a U.S. commonwealth or possession, or any of their political subdivisions or instrumentalities

D—A corporation the stock of which is regularly traded on one or more established securities markets, as described in Regulations section 1.1472-1(c)(1)(i)

E—A corporation that is a member of the same expanded affiliated group as a corporation described in Regulations section 1.1472-1(c)(1)(i)

F—A dealer in securities, commodities, or derivative financial instruments (including notional principal contracts, futures, forwards, and options) that is registered as such under the laws of the United States or any state

G—A real estate investment trust

H—A regulated investment company as defined in section 851 or an entity registered at all times during the tax year under the Investment Company Act of 1940

I—A common trust fund as defined in section 584(a)

J—A bank as defined in section 581

K—A broker

L—A trust exempt from tax under section 664 or described in section 4947(a)(1)

M—A tax exempt trust under a section 403(b) plan or section 457(g) plan

Note. You may wish to consult with the financial institution requesting this form to determine whether the FATCA code and/or exempt payee code should be completed.

Line 5

Enter your address (number, street, and apartment or suite number). This is where the requester of this Form W-9 will mail your information returns.

Line 6

Enter your city, state, and ZIP code.

Part I. Taxpayer Identification Number (TIN)

Enter your TIN in the appropriate box. If you are a resident alien and you do not have and are not eligible to get an SSN, your TIN is your IRS individual taxpayer identification number (ITIN). Enter it in the social security number box. If you do not have an ITIN, see *How to get a TIN* below.

If you are a sole proprietor and you have an EIN, you may enter either your SSN or EIN. However, the IRS prefers that you use your SSN.

If you are a single-member LLC that is disregarded as an entity separate from its owner (see *Limited Liability Company (LLC)* on this page), enter the owner's SSN (or EIN, if the owner has one). Do not enter the disregarded entity's EIN. If the LLC is classified as a corporation or partnership, enter the entity's EIN.

Note. See the chart on page 4 for further clarification of name and TIN combinations.

How to get a TIN. If you do not have a TIN, apply for one immediately. To apply for an SSN, get Form SS-5, Application for a Social Security Card, from your local SSA office or get this form online at *www.ssa.gov*. You may also get this form by calling 1-800-772-1213. Use Form W-7, Application for IRS Individual Taxpayer Identification Number, to apply for an ITIN, or Form SS-4, Application for Employer Identification Number, to apply for an EIN. You can apply for an EIN online by accessing the IRS website at *www.irs.gov/businesses* and clicking on Employer Identification Number (EIN) under Starting a Business. You can get Forms W-7 and SS-4 from the IRS by visiting IRS.gov or by calling 1-800-TAX-FORM (1-800-829-3676).

If you are asked to complete Form W-9 but do not have a TIN, apply for a TIN and write "Applied For" in the space for the TIN, sign and date the form, and give it to the requester. For interest and dividend payments, and certain payments made with respect to readily tradable instruments, generally you will have 60 days to get a TIN and give it to the requester before you are subject to backup withholding on payments. The 60-day rule does not apply to other types of payments. You will be subject to backup withholding on all such payments until you provide your TIN to the requester.

Note. Entering "Applied For" means that you have already applied for a TIN or that you intend to apply for one soon.

Caution: *A disregarded U.S. entity that has a foreign owner must use the*

Part II. Certification

To establish to the withholding agent that you are a U.S. person, or resident alien, sign Form W-9. You may be requested to sign by the withholding agent even if items 1, 4, or 5 below indicate otherwise.

For a joint account, only the person whose TIN is shown in Part I should sign (when required). In the case of a disregarded entity, the person identified on line 1 must sign. Exempt payees, see *Exempt payee code* earlier.

Signature requirements. Complete the certification as indicated in items 1 through 5 below.

1. Interest, dividend, and barter exchange accounts opened before 1984 and broker accounts considered active during 1983. You must give your correct TIN, but you do not have to sign the certification.

2. Interest, dividend, broker, and barter exchange accounts opened after 1983 and broker accounts considered inactive during 1983. You must sign the certification or backup withholding will apply. If you are subject to backup withholding and you are merely providing your correct TIN to the requester, you must cross out item 2 in the certification before signing the form.

3. Real estate transactions. You must sign the certification. You may cross out item 2 of the certification.

4. Other payments. You must give your correct TIN, but you do not have to sign the certification unless you have been notified that you have previously given an incorrect TIN. "Other payments" include payments made in the course of the requester's trade or business for rents, royalties, goods (other than bills for merchandise), medical and health care services (including payments to corporations), payments to a nonemployee for services, payments made in settlement of payment card and third party network transactions, payments to certain fishing boat crew members and fishermen, and gross proceeds paid to attorneys (including payments to corporations).

5. Mortgage interest paid by you, acquisition or abandonment of secured property, cancellation of debt, qualified tuition program payments (under section 529), IRA, Coverdell ESA, Archer MSA or HSA contributions or distributions, and pension distributions. You must give your correct TIN, but you do not have to sign the certification.

What Name and Number To Give the Requester

For this type of account:	Give name and SSN of:
1. Individual	The individual
2. Two or more individuals (joint account)	The actual owner of the account or, if combined funds, the first individual on the account[1]
3. Custodian account of a minor (Uniform Gift to Minors Act)	The minor[2]
4. a. The usual revocable savings trust (grantor is also trustee)	The grantor-trustee[1]
b. So-called trust account that is not a legal or valid trust under state law	The actual owner[1]
5. Sole proprietorship or disregarded entity owned by an individual	The owner[3]
6. Grantor trust filing under Optional Form 1099 Filing Method 1 (see Regulations section 1.671-4(b)(2)(i)(A))	The grantor*
For this type of account:	**Give name and EIN of:**
7. Disregarded entity not owned by an individual	The owner
8. A valid trust, estate, or pension trust	Legal entity[4]
9. Corporation or LLC electing corporate status on Form 8832 or Form 2553	The corporation
10. Association, club, religious, charitable, educational, or other tax-exempt organization	The organization
11. Partnership or multi-member LLC	The partnership
12. A broker or registered nominee	The broker or nominee
13. Account with the Department of Agriculture in the name of a public entity (such as a state or local government, school district, or prison) that receives agricultural program payments	The public entity
14. Grantor trust filing under the Form 1041 Filing Method or the Optional Form 1099 Filing Method 2 (see Regulations section 1.671-4(b)(2)(i)(B))	The trust

[1] List first and circle the name of the person whose number you furnish. If only one person on a joint account has an SSN, that person's number must be furnished.

[2] Circle the minor's name and furnish the minor's SSN.

[3] You must show your individual name and you may also enter your business or DBA name on the "Business name/disregarded entity" name line. You may use either your SSN or EIN (if you have one), but the IRS encourages you to use your SSN.

[4] List first and circle the name of the trust, estate, or pension trust. (Do not furnish the TIN of the personal representative or trustee unless the legal entity itself is not designated in the account title.) Also see *Special rules for partnerships* on page 2.

***Note.** Grantor also must provide a Form W-9 to trustee of trust.

Note. If no name is circled when more than one name is listed, the number will be considered to be that of the first name listed.

Secure Your Tax Records from Identity Theft

Identity theft occurs when someone uses your personal information such as your name, SSN, or other identifying information, without your permission, to commit fraud or other crimes. An identity thief may use your SSN to get a job or may file a tax return using your SSN to receive a refund.

To reduce your risk:

- Protect your SSN,
- Ensure your employer is protecting your SSN, and
- Be careful when choosing a tax preparer.

If your tax records are affected by identity theft and you receive a notice from the IRS, respond right away to the name and phone number printed on the IRS notice or letter.

If your tax records are not currently affected by identity theft but you think you are at risk due to a lost or stolen purse or wallet, questionable credit card activity or credit report, contact the IRS Identity Theft Hotline at 1-800-908-4490 or submit Form 14039.

For more information, see Publication 4535, Identity Theft Prevention and Victim Assistance.

Victims of identity theft who are experiencing economic harm or a system problem, or are seeking help in resolving tax problems that have not been resolved through normal channels, may be eligible for Taxpayer Advocate Service (TAS) assistance. You can reach TAS by calling the TAS toll-free case intake line at 1-877-777-4778 or TTY/TDD 1-800-829-4059.

Protect yourself from suspicious emails or phishing schemes. Phishing is the creation and use of email and websites designed to mimic legitimate business emails and websites. The most common act is sending an email to a user falsely claiming to be an established legitimate enterprise in an attempt to scam the user into surrendering private information that will be used for identity theft.

The IRS does not initiate contacts with taxpayers via emails. Also, the IRS does not request personal detailed information through email or ask taxpayers for the PIN numbers, passwords, or similar secret access information for their credit card, bank, or other financial accounts.

If you receive an unsolicited email claiming to be from the IRS, forward this message to *phishing@irs.gov.* You may also report misuse of the IRS name, logo, or other IRS property to the Treasury Inspector General for Tax Administration (TIGTA) at 1-800-366-4484. You can forward suspicious emails to the Federal Trade Commission at: *spam@uce.gov* or contact them at *www.ftc.gov/idtheft* or 1-877-IDTHEFT (1-877-438-4338).

Visit IRS.gov to learn more about identity theft and how to reduce your risk.

Privacy Act Notice

Section 6109 of the Internal Revenue Code requires you to provide your correct TIN to persons (including federal agencies) who are required to file information returns with the IRS to report interest, dividends, or certain other income paid to you; mortgage interest you paid; the acquisition or abandonment of secured property; the cancellation of debt; or contributions you made to an IRA, Archer MSA, or HSA. The person collecting this form uses the information on the form to file information returns with the IRS, reporting the above information. Routine uses of this information include giving it to the Department of Justice for civil and criminal litigation and to cities, states, the District of Columbia, and U.S. commonwealths and possessions for use in administering their laws. The information also may be disclosed to other countries under a treaty, to federal and state agencies to enforce civil and criminal laws, or to federal law enforcement and intelligence agencies to combat terrorism. You must provide your TIN whether or not you are required to file a tax return. Under section 3406, payers must generally withhold a percentage of taxable interest, dividend, and certain other payments to a payee who does not give a TIN to the payer. Certain penalties may also apply for providing false or fraudulent information.

CITY OF EL PASO PURCHASING & STRATEGIC SOURCING DEPARTMENT
VENDOR INFORMATION FORM
This form must be accompanied by an IRS Form W-9 and Conflict of Interest Questionnaire

City Department:_____ Telephone #_____ Name:_____
Request:
___ Add ___ Update __ Inactivate
___ Vendor ___ Contractual Employee ___ City of El Paso Employee
Vendor Sales Address: If same as W-9 check box ☐
Company Name: _____

Street:_____

City:_____State_____Zip Code_____

Contact Name & Title:_____

Telephone # (**required**) (____) _____ Fax # (____) _____

E-Mail Address:_____

Web Page:_____

VENDOR STATUS:
(Yes ___) (No ___) Small business concern (Less than 100 employees or less than $1,000,000.00 Annual Receipts)
(Yes ___) (No ___) Disadvantage business concern (At least 51% owned by one or more socially disadvantaged individuals; or, a publicly-owned business at least 51% of the stock owned by one or more of such individuals.) If your company is certified please send us a photo copy. We must have an updated copy of the certificate on file. DBES include (Please mark one:)
(___) Black Americans (____) Hispanic Americans
(___) Native Americans (____) Asian-Pacific Americans
(Yes ___) (No ___) Woman-owned business (At least 51% owned by a woman or women who also control and operate it. "Control" in this context means exercising the power to make policy decisions. "Operate" in this context means being actively involved in the day-to-day management.)
(Yes ___) No ___) Handicapped (At least 51% owned by a person or persons with an orthopedic, hearing, mental or visual impairment which substantially limits one of more of his/hers/their major life activities.)
(Yes ___) No ___) Local business enterprise (At least 51% of which is owned by a resident or residents of El Paso County and the principal place of business is in El Paso County.)
(Yes ___) No ___) Hub (Historically underutilized business) If your company is certified please send us a photo copy. We need to have an updated copy of the certificate on file.

IRS-Withholding required information – Mark one of the following which applies to the type of payment that will be made to the vendor: (Incomplete forms will be returned)

___ Wages (Withholding / Default Class 7)
___ Goods (No Withholding / No Default Class)
___ Settlement / Attorney Proceeds (Withholding / Default Class 14)
___ Medical & Healthcare (Withholding / Default Class 6)
___ Garnishment Vendor (No Withholding / No Default Class)
___ Juror (No Withholding / No Default Class)
___ Services (Withholding / Default Class 7)
___ Rental Property (Withholding / Default Class 1)
___ Stipend (No Withholding / No Default Class)
___ Corporation (No Withholding/ No Default Class)

Contractual Employees or Vendors
- Based on W-9, Individual/Sole Proprietor, Partnership, Limited Liability Company (all LLCs C=Corporation, D=Disregarded Entity, S=Corporation, P=Partnership) are marked as withholding. Corporation is not marked as withholding.
- Vendors for Rent, Medical Services, Attorney Fees are **always** marked as withholding, even if they are a Corporation

City of El Paso Employees (IRS-Withholding not required for the following items)
___Pension ___Refund ___Mileage ___Reimbursement ___Settlement ___Travel Request __Tuition Reimbursement

Send Form To: M. Suky Flores Sr. Office Assistant P - 915-212-1185 F - 915-212-0044 FloresMS@elpasotexas.gov

01/12/10

CONFLICT OF INTEREST QUESTIONNAIRE

FORM CIQ

For vendor doing business with local governmental entity

This questionnaire reflects changes made to the law by H.B. 23, 84th Leg., Regular Session.

This questionnaire is being filed in accordance with Chapter 176, Local Government Code, by a vendor who has a business relationship as defined by Section 176.001(1-a) with a local governmental entity and the vendor meets requirements under Section 176.006(a).

By law this questionnaire must be filed with the records administrator of the local governmental entity not later than the 7th business day after the date the vendor becomes aware of facts that require the statement to be filed. *See* Section 176.006(a-1), Local Government Code.

A vendor commits an offense if the vendor knowingly violates Section 176.006, Local Government Code. An offense under this section is a misdemeanor.

OFFICE USE ONLY

Date Received

1 **Name of vendor who has a business relationship with local governmental entity.**

2 ☐ **Check this box if you are filing an update to a previously filed questionnaire.**

(The law requires that you file an updated completed questionnaire with the appropriate filing authority not later than the 7th business day after the date on which you became aware that the originally filed questionnaire was incomplete or inaccurate.)

3 **Name of local government officer about whom the information in this section is being disclosed.**

_____

Name of Officer

This section (item 3 including subparts A, B, C, & D) must be completed for each officer with whom the vendor has an employment or other business relationship as defined by Section 176.001(1-a), Local Government Code. Attach additional pages to this Form CIQ as necessary.

A. Is the local government officer named in this section receiving or likely to receive taxable income, other than investment income, from the vendor?

☐ Yes ☐ No

B. Is the vendor receiving or likely to receive taxable income, other than investment income, from or at the direction of the local government officer named in this section AND the taxable income is not received from the local governmental entity?

☐ Yes ☐ No

C. Is the filer of this questionnaire employed by a corporation or other business entity with respect to which the local government officer serves as an officer or director, or holds an ownership interest of one percent or more?

☐ Yes ☐ No

D. Describe each employment or business and family relationship with the local government officer named in this section.

4

_____ _____

Signature of vendor doing business with the governmental entity Date

Adopted 8/7/2015

CERTIFICATE OF INTERESTED PARTIES

FORM 1295

Complete Nos. 1 - 4 and 6 if there are interested parties.
Complete Nos. 1, 2, 3, 5, and 6 if there are no interested parties.

OFFICE USE ONLY

1 **Name of business entity filing form, and the city, state and country of the business entity's place of business.**

2 **Name of governmental entity or state agency that is a party to the contract for which the form is being filed.**

3 **Provide the identification number used by the governmental entity or state agency to track or identify the contract, and provide a description of the goods or services to be provided under the contract.**

4

Name of Interested Party	City, State, Country (place of business)	Nature of Interest (check applicable)	
		Controlling	Intermediary

5 **Check only if there is NO Interested Party.** ☐

6 **AFFIDAVIT**

I swear, or affirm, under penalty of perjury, that the above disclosure is true and correct.

_____
Signature of authorized agent of contracting business entity

AFFIX NOTARY STAMP / SEAL ABOVE

Sworn to and subscribed before me, by the said _____, this the _____ day of _____, 20 _____, to certify which, witness my hand and seal of office.

_____
Signature of officer administering oath | Printed name of officer administering oath | Title of officer administering oath

ADD ADDITIONAL PAGES AS NECESSARY

City of El Paso
ACCOUNTS PAYABLE
DIRECT DEPOSIT SIGN-UP FORM

This form is used to collect important information to enroll, update or change your Direct Deposit request. Please complete and return to the Purchasing & Strategic Sourcing Department; see contact information provided below. For assistance, please call 915-212-1185.

Part I – Vendor / Employee Information

Name of Payee (Print) _____

Federal Taxpayer ID Number or Employee KRONOS ID# _____

Address: _____

City, State, and Zip Code _____

Telephone _____

E-mail (Print) _____

Part II – Direct Deposit Information

Action Requested: ☐ Start Direct Deposit ☐ Stop Direct Deposit ☐ Change Direct Deposit

Name of Financial Institution: _____

Routing Number (must be nine digits): _____

Bank Account Number: _____

Account Type: ☐ Checking ☐ Savings

For convenience, you may attach a voided check.
Do not use a deposit slip as some banking institutions do not display the correct routing number on deposit slips.

Part III – Terms and Conditions

I hereby authorize and request the City of El Paso to initiate credit entries and if necessary, a debit entry in accordance with National Automated Clearing House Association (NACHA) rules reversing a credit entry made in error, to my account at the financial institution named. The electronic payment is to remain in effect until withdrawn by written notification to the City of El Paso. Funds that are sent to a closed bank account are returned by the banking institutions within five (5) business days. Re-issued payments will be made when funds are returned to City of El Paso.

_____ _____
Signature **Date**

Purchasing & Strategic Sourcing Department
300 N. Campbell, 1st floor – EL PASO TX 79901
Fax 915-212-0044
Email: SilvaML@elpasotexas.gov

El Paso All-America City 2010

FEDERAL LABOR PRACTICES CERTIFICATION

TO BE SUBMITTED BY PRIME CONTRACTOR AND ALL SUBCONTRACTORS

EPIA Checked Baggage Inspection System
SOLICITATION No. 2016-963

EQUAL EMPLOYMENT OPPORTUNITY AUTHORITY

In accordance with Executive Order 11246 (30 F.R. 12319-25), the implementing rules and regulations thereof, and orders of the Secretary of Labor, a Certification regarding Equal Opportunity is required of bidders or prospective contractors and their proposed subcontractors prior to the award of contracts or subcontracts.

This form consolidates all the labor practices the City, by Federal law, must insist its contractor's follow. Your signature on this form is a pledge and assurance you have complied with, or will comply with, all terms of these regulations and is a NON-WAIVEABLE PRECONDITION OF AWARD.

CONTRACTOR'S CERTIFICATION

1. Contractor has participated in a previous contract or sub-contract subject to the Equal Opportunity Clause. _____Yes _____No

2. Compliance reports were required to be filed in connection with such previous contract or subcontract. _____Yes _____No

3. Contractor has filed all compliance reports required by Executive Order 11246 or by regulations of the Office of Federal Contract Compliance Programs issued pursuant to Title VII of the Civil Rights Act of 1964. _____Yes _____No

   If answer to item 3 is "No" please explain in detail on reverse side of this certification.

4. Dollar amount of proposed contract is $_____.

   Anticipated performance period is _____ ( ) consecutive calendar days.

   Expected total number of employees who will perform the proposed construction is _____.

   Race or ethnic group designation of bidder:

   ____ Black ____ Hispanic ____ Oriental ____ American Indian
   ____ Eskimo ____ Aleut ____ White ____ Pacific Islanders
   ____ Other:_____

_____ _____
Company Name Date

_____ _____
Signature Title

NONSEGREGATED FACILITIES

1. Notice to Prospective Federally-Assisted Construction Contractors

a. A Certification of Nonsegregated Facilities, as required by the May 9, 1967 order (32 F.R. 7439, May 19, 1967) on Elimination of Segregated Facilities, by the Secretary of Labor, must be submitted to the recipient prior to the award of a federally- assisted construction contract exceeding $10,000 which is not exempt from the provisions of the Equal Opportunity clause.

b. Contractors receiving federally-assisted construction contracts exceeding $10,000 which are not exempt from the provisions of the Equal Opportunity Clause will be required to provide for the forwarding of the following notice to prospective subcontractors for supplies and construction contracts where the subcontracts exceed $10,000 and are not exempt from the provisions of the Equal Opportunity clause.

2. Notice to Prospective Subcontractors of Requirement for Certification of Nonsegregated facilities

a. A Certification of Nonsegregated Facilities, as required by the May 9, 1967 order (32 F.R. 7439, May 19, 1967) on Elimination of Segregated Facilities, by the Secretary of Labor, must be submitted to the contractor prior to the award of a contract exceeding $10,000 which is not exempt from the provisions of the Equal Opportunity clause.

b. Contractors receiving subcontract awards exceeding $10,000 which are not exempt from the provisions of the Equal Opportunity clause will be required to provide for the forwarding of this notice to prospective subcontractors for supplies and construction contracts where the subcontracts exceed $10,000 and are not exempt from the provisions of the Equal Opportunity clause.

3. Definition

As used in this certification, the term "segregated facilities" means any waiting rooms, work areas, restrooms and wash rooms, restaurants and other eating areas, time clocks, locker rooms and other storage or dressing areas, parking lots, drinking fountains, recreation or entertainment areas, transportation, and housing facilities provided for employees which are segregated by explicit directive or are in fact segregated on the basis of race, creed, color, or national origin, because of habit, local custom, or otherwise.

CERTIFICATION OF NONSEGREGATED FACILITIES

EPIA Checked Baggage Inspection System
SOLICITATION No. 2016-963

The federally assisted construction contractor certifies that:

1. He/she does not maintain or provide for his/her employees any segregated facilities at any of his/her establishments, and
2. He/she does not permit his/her employees to perform their services at any location, under his/her control, where segregated facilities are maintained.

The federally assisted construction contractor certifies further that he/she will not:

1. Maintain or provide for his/her employees any segregated facilities at any of his/her establishments, and that
2. He/she will not permit his/her employees to perform their services at any location, under his/her control, where segregated facilities are maintained.

The federally assisted construction contractor agrees that a breach of this certification is a violation of the Equal Opportunity clause in this contract.

The federally-assisted construction contractor agrees that (except where he/she has obtained identical certifications from proposed subcontractors for specific time periods) he/she will obtain identical certifications in duplicate from proposed subcontractors prior to the award of Subcontracts exceeding $10,000 which are not exempt from the provisions of the Equal Opportunity clause, and that he/she will retain the duplicate of such certification in his/her files. The contractor will include the original in his/her Bid Package.

_____	_____
Company Name	Date
_____	_____
Signature	Title

LABOR STANDARDS AND PREVAILING WAGE REQUIREMENTS CERTIFICATION

EPIA Checked Baggage Inspection System
SOLICITATION No. 2016-963

1. The undersigned, having pledged to a contract with Sun Metro-Mass Transit Department of The City of El Paso for the construction of the above-identified projects, acknowledges that:
   a. The Labor Standards provisions are included in the aforesaid contract;
   b. Correction of any infractions of the aforesaid conditions, including infractions by any of my subcontractors and any lower tier subcontractors, is my responsibility.

2. I certify that:
   a. Neither I nor any firm, partnership or association in which I have substantial interest is designated as an ineligible contractor, by the Comptroller General of the Unites States pursuant to Section 5.6(b) of the Regulations of the Secretary of Labor, Part 5 (29 CFR, Part 5) or pursuant to Section 3 (a) of the Davis-Bacon Act, as amended [40 U.S.C. 276a-2(a)].
   b. No part of the aforementioned contract has been or will be subcontracted to any subcontractor if any firm, corporation, partnership or association in which such subcontractor has substantial interest is designated as an ineligible contractor pursuant to any of the aforementioned regulatory or statutory provisions.

3. I agree to obtain and forward to the aforementioned recipient, the City of El Paso, within ten (10) consecutive calendar days after the execution of any subcontract, including those executed by my subcontractors and any lower tier subcontractors, a Subcontractor's Certification Concerning Labor Standards and Prevailing Wage Requirements executed by the subcontractors.

4. I certify that:
   a. The legal name and the business address of the undersigned are:

   _____

   _____

   b. The undersigned is a:

   ☐ A Single Proprietorship ☐ A Corporation ☐ A Limited Partnership
   ☐ A Joint Venture ☐ Other:_____

   Organized in the County of _____, State of _____.
   (Name of State)

LABOR STANDARDS AND PREVAILING WAGE REQUIREMENTS CERTIFICATION, cont.

EPIA Checked Baggage Inspection System
SOLICITATION No. 2016-963

c. The name, title and address of the owner, partner, or officers of the undersigned are:

NAME TITLE ADDRESS

_____

_____

d. The names and address of all other persons, both natural and corporate, having a substantial interest in the undersigned, and the nature of the interest are:

_____

_____

e. The names, addresses and trade classifications of all other building construction contractors in which the undersigned has a substantial interest are:

NAME ADDRESS TRADE CLASSIFICATION

_____

_____

_____ _____
Company Name Date

_____ _____
Signature Title

EQUAL EMPLOYMENT OPPORTUNITY AGREEMENT

EPIA Checked Baggage Inspection System
SOLICITATION No. 2016-963

[I PLEDGE AND AFFIRM THAT I HAVE OR WILL CARRY OUT THE FOLLOWING]:

1. Read all terms, conditions and requirements of the Equal Employment Opportunity Agreement set forth in Section IV-A.

2. Provided for compliance with all conditions listed in this Agreement in a timely manner, including submission to the City of El Paso of an Equal Employment Opportunity Plan.

3. Contractor will not subcontract any work in connection with this project unless he/she first submits EEO Plan as described in Paragraph 2 above.

I HEREBY CERTIFY THAT ALL INFORMATION ABOVE IS TRUE AND COMPLETE TO THE BEST OF MY KNOWLEDGE AND BELIEF, AND FURTHER BIND MYSELF TO CARRY OUT ALL COMPLIANCE REQUIREMENTS SET FORTH IN THIS CONTRACT.

_____	_____
Company Name	Date
_____	_____
Signature	Title

W A R N I N G

U.S. Criminal Code, Section 1010, Title 18, U.S.C., provides in part:

"WHOEVER,....MAKES, PASSES, UTTERS OR PUBLISHES ANY STATEMENT, KNOWING THE SAME TO BE FALSE....SHALL BE FINED NOT MORE THAN $5,000 OR IMPRISONED NOT MORE THAN TWO YEARS, OR BOTH."

CERTIFICATION OF PRIMARY PARTICIPANT REGARDING DEBARMENT, SUSPENSION, AND OTHER RESPONSIBILITY MATTERS

TO BE SUBMITTED BY THE PRIME CONTRACTOR

EPIA Checked Baggage Inspection System
SOLICITATION No. 2016-963

The Bidder hereby certifies to the best of its knowledge and belief, that it and its principals:

1. Are not presently debarred, suspended, proposed for debarment, declared ineligible, or voluntarily excluded from covered transactions by any Federal department or agency;

2. Have not within a three-year period preceding this proposal been convicted of/or had a civil judgment rendered against them for commission of a fraud or a criminal offense in the connection with obtaining, attempting to obtain, or performing a public (Federal, State or local) transaction or contract under a public transaction; violation of Federal or State antitrust statutes or commission of embezzlement, theft, forgery, bribery, falsification or destruction of records, making false statements, or receiving stolen property;

3. Are not presently indicted for or otherwise criminally or civilly charged by a governmental entity (Federal, State, or local) with commission of any of the offenses enumerated in paragraph (2) of this certification; and

4. Have not within a three-year period preceding this application/proposal had one or more transactions (Federal, State or local) terminated for cause or default.

If the Bidder is unable to certify to any of the statements in this certification, the participant shall attach an explanation to this certification.

THE BIDDER HEREBY CERTIFIES OR AFFIRMS THE TRUTHFULNESS AND ACCURACY OF THE CONTENTS OF THE STATEMENTS SUBMITTED ON OR WITH THIS CERTIFICATION AND UNDERSTANDS THAT THE PROVISIONS OF 31 U.S.C. SECTIONS 3801 ET SEQ, ARE APPLICABLE THERETO.

Signature/Authorized Certifying Official	Typed Name & Title
Contractor/Subcontractor	Date Signed
Federal Identification Number	

(INSTRUCTIONS FOR COMPLIANCE OFFICER – ATTACH COPY OF EPLS TO THIS FORM)

CERTIFICATION OF LOWER-TIER PARTICIPANTS
REGARDING DEBARMENT, SUSPENSION,
AND OTHER INELIGIBILITY AND VOLUNTARY EXCLUSION

TO BE SUBMITTED BY ALL SUBCONTRACTORS

EPIA Checked Baggage Inspection System
SOLICITATION No. 2016-963

_____, certifies, by submission of this proposal, that neither it nor its principals are presently debarred, suspended, proposed for debarment, declared ineligible, or voluntarily excluded from participation in this transaction by any Federal department or agency.

_____, CERTIFIES OR AFFIRMS THE TRUTHFULNESS AND ACCURACY OF THE CONTENTS OF THE STATEMENTS SUBMITTED ON OR WITH THIS CERTIFICATION AND UNDERSTANDS THAT THE PROVISIONS OF 31 U.S.C. SECTIONS 3801 ET SEQ, ARE APPLICABLE THERETO.

If the Lower Tier Participant is unable to certify to any of the statements in this certification, such participant shall attach an explanation to this proposal.

_____ _____
Signature/Authorized Certifying Official Typed Name & Title

_____
Date Signed

_____
Federal Identification Number

(INSTRUCTIONS FOR COMPLIANCE OFFICER – ATTACH COPY OF EPLS TO THIS FORM)

CERTIFICATION REGARDING LOBBYING

Certification for Grants, Loans, and Cooperative Agreements

EPIA Checked Baggage Inspection System
SOLICITATION No. 2016-963

The undersigned certifies, to the best of his or her knowledge and belief, that:

1. No Federal appropriated funds have been paid or will be paid, by or on behalf of the undersigned, to any person for influencing or attempting to influence an officer or employee of any agency, a Member of Congress, an officer or employee of Congress, or an employee of a Member of Congress in connection with the awarding of any Federal contract, the making of any Federal grant, the making of any Federal loan, the entering into of any cooperative agreement, and the extension, continuation, renewal, amendment, or modification of any Federal contract, grant, loan, or cooperative agreement.

2. If any funds other than Federal appropriated funds have been paid or will be paid to any person for influencing or attempting to influence an officer or employee of any agency, a Member of Congress, an Officer or employee of Congress, or an employee of a Member of Congress in connection with the Federal contract, grant, loan or cooperative agreement, the undersigned shall complete and submit Standard Form LLL "Disclosure Form to Report Lobbying" in accordance with its instructions.

3. The undersigned shall require that the language in this certification be included in the award documents for all sub-awards exceeding $100,000 at all tiers (including subcontracts, sub-grants, and contracts under grants, loans, and cooperative agreements) and that all sub-recipients shall certify and disclose accordingly.

This certification is a material representation of fact upon which reliance was placed when this transaction was made or entered into. Submission of this certification is a prerequisite for making or entering into this transaction imposed by Section 1352, Title 31, U.S. Code. Any persons who fail to file the required certification shall be subject to a civil penalty of not less than $10,000 and not more than $100,000 for each such failure.

Signature/Authorized Certifying Official	Typed Name & Title
Contractor/Subcontractor	Date Signed

REQUIREMENTS UNDER THE DISADVANTAGED BUSINESS ENTERPRISE PROGRAM (DBE)

1. **General.** Executive Order 11625 required Federal agencies to develop plans and programs to encourage minority business enterprises. The Department of Transportation (DOT) regulation implementing this mandate is 49 CFR Part 26, participation by Minority Business Enterprise in Department of Transportation Programs. Disadvantage Business Enterprise (DBE) means a small business concern that is owned (at least 51%) and controlled by one or more socially and economically disadvantaged individuals, including, for purposes of this definition, women.

2. **Applicability**. All sponsors are required, as a condition or project approval, to assume certain DBE obligations as set forth in 49 CFR Part 26. In addition, there is passed onto contractors a responsibility to make good faith efforts to meet the DBE participation goals contained in Section I-B.17, Information for Bidders.

3. **Policy.** It is the policy of the FAA that DBEs as defined in 49 CFR Part 26 shall have the maximum opportunity to participate in the performance of contracts financed in whole or in part with Federal funds under this contract. Consequently, the DBE requirements of 49 CFR Part 26 apply to this contract.

4. **DBE Obligation.** The contractor agrees to ensure that DBEs as defined in 49 CFR Part 26 have the maximum opportunity to participate in the performance of contracts and subcontracts financed in whole or in part with Federal funds provided under this contract. In this regard, the contractor shall take all necessary and reasonable steps in accordance with 49 CFR Part 26 to ensure that DBEs have the maximum opportunity to compete for and perform contracts. The contractor shall not discriminate on the basis of race, color, national origin or sex in the award and performance of FAA assisted contracts.

5. Failure to carry out the requirements set forth above shall constitute a breach of contract. After notification, this may result in termination of the contract by the sponsor or such remedy as the sponsor deems appropriate.

I PLEDGE AND AFFIRM THAT I HAVE READ ALL TERMS, CONDITIONS AND REQUIREMENTS REGARDING THE DISADVANTAGED BUSINESS ENTERPRISE PROGRAM AS OUTLINED ABOVE:

_____	_____
Company Name	Date
_____	_____
Signature	Title

LETTER OF INTENT TO PERFORM AS A SUBCONTRACTOR

TO BE SUBMITTED BY ALL DBE SUBCONTRACTORS

TO: _____
Name of Prime Contractor

PROJECT: EPIA Checked Baggage Inspection System
BID NO: 2016-963

The undersigned intends to perform work in connection with the above project as (check one):

☐ A Single Proprietorship ☐ A Corporation ☐ A Limited Partnership
☐ A Joint Venture ☐ Other:_____

Organized in the County of _____, State of _____.
(Name of State)

The disadvantaged status as a DBE of the undersigned is confirmed in the most current Texas Department of Transportation DBE listing.

The undersigned is prepared to perform the following described work in connection with the above project:

_____
_____
_____

at the following price $_____.

_____% (percent) of the dollar value of the subcontract will be sublet and/or awarded to non-disadvantaged contractors and /or non-disadvantaged suppliers. The undersigned will enter into a formal agreement for the above work with you conditioned upon your execution of a contract with the City of El Paso.

_____ _____
Signature/Authorized Certifying Official Typed Name & Title

_____ _____
DBE/WBE Subcontractor Date Signed

SCHEDULE OF DBE PARTICIPATION

PROJECT: EPIA Checked Baggage Inspection System

BID NO: 2016-963

_____
Prime Contractor

ATTACH DBE CERTIFICATES FOR ALL SUBCONTRACTORS LISTED BELOW

Name of DBE Contractor	Address	Type of Work	Start/End Dates	Agreed Price	DBE Percentage

NOTE

The undersigned will enter into a formal agreement with Disadvantaged Contractors for work listed in this schedule conditioned upon the execution of a contract with the City of El Paso.

_____
Signature/Authorized Certifying Official

_____
Typed Name & Title

_____
DBE Subcontractor

_____
Date Signed

TRADE RESTRICTION CERTIFICATION

PROJECT: EPIA Checked Baggage Inspection System
BID NO: 2016-963

The Contractor or Subcontractor, by submission of an offer and/or execution of contract, certifies that it:

a. is not owned or controlled by one or more citizens or nationals of a foreign country included in the list of countries that discriminate against U.S. firms published by the Office of the United States Trade Representative (USTR);

b. has not knowingly entered into any contract or subcontract for this project with a person that is a citizen or a national of a foreign country on said list, or is owned or controlled directly or indirectly by one or more citizens or nationals of a foreign country on said list;

c. has not procured any product nor subcontracted for the supply of any product for use on the project that is produced in a foreign country on said list.

Unless the restrictions of this clause are waived by the Secretary of Transportation in accordance with 49 CFR 30.17, no contract shall be awarded to a contractor or subcontractor who is unable to certify to the above. If the contractor knowingly procures or subcontracts for the supply of any product or service of a foreign country on the said list for use on the project, the Federal Aviation Administration (FAA) may direct, through the sponsor, cancellation of the contract at no cost to the Government.

Further, the contractor agrees that, if awarded a contract resulting from this solicitation, it will incorporate this provision for certification without modification in each contract and in all lower tier subcontracts. The contractor may rely on the certification of a prospective subcontractor unless it has knowledge that the certification is erroneous.

The contractor shall provide immediate written notice to the sponsor if the contractor learns that its certification or that of a subcontractor was erroneous when submitted or has become erroneous by reason of changed circumstances. The subcontractor agrees to provide immediate written notice to the contractor, if at any time it learns that its certification was erroneous by reason of changed circumstances.

This certification is a material representation of fact upon which reliance was placed when making the award. If it is later determined that the contractor or subcontractor knowingly rendered an erroneous certification, the FAA may direct, through the sponsor, cancellation of the contract of subcontract for default at no cost to the Government.

Nothing contained in the foregoing shall be construed to require establishment of a system of records in order to render, in good faith, the certification required by this provision. The knowledge and information of a contractor is not required to exceed that which is normally possessed by a prudent person in the ordinary course of business dealings.

This certification concerns a matter within the jurisdiction of an agency of the United States of America, and the making of a false, fictitious or fraudulent certification may render the maker subject to prosecution under Title 18, United States Code, Section 1001.

Company Name	Date
Signature	Title

BUY AMERICAN CERTIFICATION

(AVIATION SAFETY AND CAPACITY EXPANSION ACT OF 1990)

PROJECT: EPIA Checked Baggage Inspection System
BID NO: 2016-963

The Contractor agrees that, with the exception for those items listed below or on a separate and clearly identified attachment to this bid, only domestic steel and manufactured products will be used by the Contractor, subcontractors, materialmen and suppliers in the performance of this contract, as defined below:

The following terms apply to this clause:

a. **Steel and Manufactured Products.** As used in this clause, steel and manufactured products include: (1) those produced in the United States, or (2) a manufactured product produced in the United States, if the cost of its components mined, produced or manufactured in the United States exceeds 60 percent of the cost of all its components and final assembly has taken place in the United States.

b. **Components.** As used in this clause, components means those articles, materials, and supplies incorporated directly into steel and manufactured products.

c. **Cost of Components.** This means the costs for production of the components, exclusive of final assembly labor costs.

PRODUCT	COUNTRY OF ORIGIN

_____ _____
Company Name Date

_____ _____
Signature Title

EPIA Checked Baggage Inspection System

Solicitation No. 2016-963

City of El Paso
Purchasing and Strategic Sourcing Department
300 N. Campbell
El Paso, Texas

VOLUME 2 OF 3

NOTICE OF CLARIFICATION
PREVAILING WAGE RATES
"BUILDING" CONSTRUCTION

EPIA Checked Baggage Inspection System

SOLICITATION No. 2016-963

Effective September 24, 2013, City Council passed a resolution adopting the City of El Paso Prevailing Wage Rates for "Building," "Highway" and "Heavy" construction in accordance with Chapter 2258.022(a)(1) of the Texas Government Code.

This Contract contains multiple sets of wage rates:

- **The City of El Paso Prevailing Wage Rates applicable to this project**
- **Federal Wage Rates applicable to this project**

Where there are similar job classifications in both the Federal Wage Rates and the City of El Paso Prevailing Hourly Wage Rates, the higher wage of the two within the relevant construction type shall be paid.

By Federal Law, amendments must be issued whenever there is a change in the Federal Wage Rates.

*****APPRENTICES MAY BE REQUIRED FOR THIS PROJECT*****

CITY OF EL PASO, TEXAS
2012 Building Construction Trades Wage Rates

CLASSIFICATION	BASE WAGE PER HOUR	TOTAL FRINGES PER HOUR	HOURLY PREVAILING WAGE RATE	PER DIEM WAGE RATE
Automatic Fire Sprinkler Fitter, Certified	25.84	16.47	42.31	338.48
Brick masons and Block masons	16.92	-	16.92	135.36
Carpenter – Rough	14.71	-	14.71	117.68
Carpenter – All Other Work	14.85	-	14.85	118.80
Caulker / Sealers	10.00	-	10.00	80.00
Door & Hardware Specialist	12.00	1.35	13.35	106.80
Drywall and Ceiling Tile Installers	12.50	-	12.50	100.00
Drywall Finishers & Tapers	14.00	-	14.00	112.00
Electrician	20.53	7.19	27.72	221.76
Electronic Technician	18.43	1.01	19.44	155.52
Elevator Installers and Repairers	31.35	15.10	46.45	371.60
Fence Erectors	9.50	-	9.50	76.00
Floor Layers–Carpet & Resilient	12.87	-	12.87	102.96
Floor Layers – Specialty	13.00	-	13.00	104.00
Floor Layers – Wood	11.50	-	11.50	92.00
Fork Lift Operator	18.00	5.83	23.83	190.64
Glaziers	10.00	-	10.00	80.00
Hazardous Materials Removal Workers	10.00	-	10.00	80.00
Heating, Air Conditioning and Refrigeration Service Technician	22.00	-	22.00	176.00
Insulation Workers – Mechanical	14.00	-	14.00	112.00
Irrigator – Landscape Certified	14.92	-	14.92	119.36
Laborer, Common	9.88	-	9.88	79.04

CLASSIFICATION	BASE WAGE PER HOUR	TOTAL FRINGES PER HOUR	HOURLY PREVAILING WAGE RATE	PER DIEM WAGE RATE
Laborer, Skilled	13.00	-	13.00	104.00
Man-lift Operator – Include with trade	12.13	-	12.13	97.04
Masons, Cement and Concrete Finishers	13.25	-	13.25	106.00
Mason, Rock	17.97	-	17.97	143.76
Mason, Stone	11.91	-	11.91	95.28
Painters	10.00	-	10.00	80.00
Paper Hanger	10.00	.50	10.50	84.00
Pipe layers	15.00	-	15.00	120.00
Pipe Fitters and Steamfitters	11.43	3.74	15.17	121.36
Plaster and Stucco Applicator	13.00	0.50	13.50	108.00
Plumbers	17.50	-	17.50	140.00
Reinforcing Iron and Rebar Workers	18.38	4.64	23.02	184.16
Roofers	16.00	-	16.00	128.00
Sheet Metal Workers	23.92	-	23.92	191.36
Structural Iron & Steel Workers	17.20	-	17.20	137.60
Tile and Marble Setters	12.50	-	12.50	100.00
Truck Drivers, Heavy and Tractor-Trailer	14.69	-	14.69	117.52
Truck Drivers, Light (under 26,000 GVW)	15.00	-	15.00	120.00

All persons required to be licensed or certified must meet those qualifications to be paid the associated rate.

General Decision Number: TX160295 03/18/2016 TX295

Superseded General Decision Number: TX20150295

State: Texas

Construction Type: Building

County: El Paso County in Texas.

BUILDING CONSTRUCTION PROJECTS (does not include single family homes or apartments up to and including 4 stories).

Note: Under Executive Order (EO) 13658, an hourly minimum wage of $10.15 for calendar year 2016 applies to all contracts subject to the Davis-Bacon Act for which the solicitation was issued on or after January 1, 2015. If this contract is covered by the EO, the contractor must pay all workers in any classification listed on this wage determination at least $10.15 (or the applicable wage rate listed on this wage determination, if it is higher) for all hours spent performing on the contract in calendar year 2016. The EO minimum wage rate will be adjusted annually. Additional information on contractor requirements and worker protections under the EO is available at www.dol.gov/whd/govcontracts.

Modification Number	Publication Date
0	01/08/2016
1	03/18/2016

BOIL0074-003 01/01/2014

	Rates	Fringes
BOILERMAKER	$ 23.14	21.55

ELEC0583-001 12/01/2014

	Rates	Fringes
ELECTRICIAN (Excludes Low Voltage Wiring and Installation of Alarms/HVAC Temperature Controls)	$ 21.56	5.25% + $6.65

ENGI0178-005 06/01/2014

	Rates	Fringes
POWER EQUIPMENT OPERATOR		
(1) Tower Crane	$ 29.00	10.60
(2) Cranes with Pile Driving or Caisson Attachment and Hydraulic Crane 60 tons and above	$ 28.75	10.60
(3) Hydraulic cranes 59 Tons and under	$ 27.50	10.60

IRON0084-011 06/01/2015

	Rates	Fringes
IRONWORKER, ORNAMENTAL	$ 23.02	6.35

PLUM0412-001 04/01/2013

	Rates	Fringes
PLUMBER (Including HVAC Pipe Installation)	$ 31.14	12.43

---

* SFTX0669-002 01/01/2016

	Rates	Fringes
SPRINKLER FITTER (Fire Sprinklers)	$ 27.43	22.52

SUTX2014-021 07/21/2014

	Rates	Fringes
BRICKLAYER	$ 16.17	0.00
CARPENTER (Drywall Finishing/Taping Only)	$ 12.81	0.00
CARPENTER, Excludes Drywall Finishing/Taping, Drywall Hanging, Form Work and Metal Stud Installation	$ 13.51	3.29
CEMENT MASON/CONCRETE FINISHER	$ 13.02	0.00
DRYWALL HANGER AND METAL STUD INSTALLER	$ 12.81	0.00
ELECTRICIAN (Alarm Installation Only)	$ 15.38	2.92
ELECTRICIAN (HVAC/Temperature Controls Installation Only)	$ 19.09	6.45
ELECTRICIAN (Low Voltage Wiring Only)	$ 15.38	2.92
FENCE ERECTOR	$ 9.93	1.83
FLOOR LAYER: Carpet	$ 12.81	0.00
FLOOR LAYER: Vinyl Flooring	$ 12.87	0.00
FORM WORKER	$ 12.57	1.03
GLAZIER	$ 15.86	1.00
INSULATOR - MECHANICAL (Duct, Pipe & Mechanical System Insulation)	$ 16.91	0.00
IRONWORKER, REINFORCING	$ 15.60	0.00
IRONWORKER, STRUCTURAL	$ 15.37	4.34
LABORER: Common or General	$ 9.30	0.00
LABORER: Driller	$ 14.12	1.01

LABORER: Mason Tender - Brick...$ 12.50 2.30

LABORER: Mason Tender - Cement/Concrete.....$ 10.82 0.96

LABORER: Pipelayer.....$ 11.00 3.47

LABORER: Roof Tearoff.....$ 10.06 0.00

LABORER: Landscape and Irrigation.....$ 10.00 0.00

OPERATOR: Backhoe/Excavator/Trackhoe.....$ 14.43 0.74

OPERATOR: Bobcat/Skid Steer/Skid Loader.....$ 13.93 0.00

OPERATOR: Bulldozer.....$ 18.29 1.31

OPERATOR: Drill.....$ 16.22 0.34

OPERATOR: Forklift.....$ 14.83 0.00

OPERATOR: Grader/Blade.....$ 19.50 1.05

OPERATOR: Loader.....$ 12.87 0.70

OPERATOR: Mechanic.....$ 17.00 0.00

OPERATOR: Paver (Asphalt, Aggregate, and Concrete).....$ 16.03 0.00

OPERATOR: Roller.....$ 12.70 0.00

PAINTER (Brush, Roller, and Spray).....$ 12.50 0.00

PIPEFITTER, Excludes HVAC Pipe Installation.....$ 18.15 0.98

ROOFER.....$ 11.42 0.00

SHEET METAL WORKER (HVAC Duct Installation Only).....$ 23.56 3.60

SHEET METAL WORKER, Excludes HVAC Duct Installation.....$ 21.13 6.53

TILE FINISHER.....$ 11.22 0.00

TILE SETTER.....$ 12.02 0.00

TRUCK DRIVER: Dump Truck.....$ 12.39 1.18

TRUCK DRIVER: Flatbed Truck.....$ 19.65 8.57

TRUCK DRIVER: Semi-Trailer Truck.....$ 12.50 0.00

TRUCK DRIVER: Water Truck.....$ 12.00 4.11

WELDERS - Receive rate prescribed for craft performing

operation to which welding is incidental.

==========

Unlisted classifications needed for work not included within the scope of the classifications listed may be added after award only as provided in the labor standards contract clauses (29CFR 5.5 (a) (1) (ii)).

The body of each wage determination lists the classification and wage rates that have been found to be prevailing for the cited type(s) of construction in the area covered by the wage determination. The classifications are listed in alphabetical order of "identifiers" that indicate whether the particular rate is a union rate (current union negotiated rate for local), a survey rate (weighted average rate) or a union average rate (weighted union average rate).

Union Rate Identifiers

A four letter classification abbreviation identifier enclosed in dotted lines beginning with characters other than "SU" or "UAVG" denotes that the union classification and rate were prevailing for that classification in the survey. Example: PLUM0198-005 07/01/2014. PLUM is an abbreviation identifier of the union which prevailed in the survey for this classification, which in this example would be Plumbers. 0198 indicates the local union number or district council number where applicable, i.e., Plumbers Local 0198. The next number, 005 in the example, is an internal number used in processing the wage determination. 07/01/2014 is the effective date of the most current negotiated rate, which in this example is July 1, 2014.

Union prevailing wage rates are updated to reflect all rate changes in the collective bargaining agreement (CBA) governing this classification and rate.

Survey Rate Identifiers

Classifications listed under the "SU" identifier indicate that no one rate prevailed for this classification in the survey and the published rate is derived by computing a weighted average rate based on all the rates reported in the survey for that classification. As this weighted average rate includes all rates reported in the survey, it may include both union and non-union rates. Example: SULA2012-007 5/13/2014. SU indicates the rates are survey rates based on a weighted average calculation of rates and are not majority rates. LA indicates the State of Louisiana. 2012 is the year of survey on which these classifications and rates are based. The next number, 007 in the example, is an internal number used in producing the wage determination. 5/13/2014 indicates the survey completion date for the classifications and rates under that identifier.

Survey wage rates are not updated and remain in effect until a new survey is conducted.

Union Average Rate Identifiers

Classification(s) listed under the UAVG identifier indicate that no single majority rate prevailed for those classifications; however, 100% of the data reported for the classifications was union data. EXAMPLE: UAVG-OH-0010 08/29/2014. UAVG indicates that the rate is a weighted union average rate. OH indicates the state. The next number, 0010 in the example, is an internal number used in producing the wage determination. 08/29/2014 indicates the survey completion date for the classifications and rates under that identifier.

A UAVG rate will be updated once a year, usually in January of each year, to reflect a weighted average of the current negotiated/CBA rate of the union locals from which the rate is based.

WAGE DETERMINATION APPEALS PROCESS

1.) Has there been an initial decision in the matter? This can be:

* an existing published wage determination
* a survey underlying a wage determination
* a Wage and Hour Division letter setting forth a position on a wage determination matter
* a conformance (additional classification and rate) ruling

On survey related matters, initial contact, including requests for summaries of surveys, should be with the Wage and Hour Regional Office for the area in which the survey was conducted because those Regional Offices have responsibility for the Davis-Bacon survey program. If the response from this initial contact is not satisfactory, then the process described in 2.) and 3.) should be followed.

With regard to any other matter not yet ripe for the formal process described here, initial contact should be with the Branch of Construction Wage Determinations. Write to:

Branch of Construction Wage Determinations
Wage and Hour Division
U.S. Department of Labor
200 Constitution Avenue, N.W.
Washington, DC 20210

2.) If the answer to the question in 1.) is yes, then an interested party (those affected by the action) can request review and reconsideration from the Wage and Hour Administrator (See 29 CFR Part 1.8 and 29 CFR Part 7). Write to:

Wage and Hour Administrator
U.S. Department of Labor
200 Constitution Avenue, N.W.
Washington, DC 20210

The request should be accompanied by a full statement of the interested party's position and by any information (wage payment data, project description, area practice material, etc.) that the requestor considers relevant to the issue.

3.) If the decision of the Administrator is not favorable, an interested party may appeal directly to the Administrative Review Board (formerly the Wage Appeals Board). Write to:

Administrative Review Board
U.S. Department of Labor
200 Constitution Avenue, N.W.
Washington, DC 20210

4.) All decisions by the Administrative Review Board are final.

==========

END OF GENERAL DECISION

2012 BUILDING DEFINITIONS

1	**Automatic Fire Sprinkler Fitter, Certified**	Installation, testing, inspecting and certifying of automatic fire suppression systems in any and all types of structures. Sprinkler Fitters specialize in piping associated with fire sprinkler systems. These types of systems are required to be installed and maintained in accordance with strict guidelines, usually National Fire Protection Association (NFPA) Standards, in order to maintain compliance with building and fire codes. Sprinkler Fitters work with a variety of pipe and materials including plastic, copper, steel, cast iron, and ductile iron. The fire suppression piping may contain water, air, antifreeze, fire retardant foam, gas or chemicals for hood systems. Sprinkler systems installed by Sprinkler Fitters can include but not limited to underground supply, standpipes, fire pumps as well as overhead piping systems.
2	**Brickmasons and Blockmasons**	Lay and bind building materials, such as brick, structural tile, concrete block, cinder block, glass block, and terra-cotta block, with mortar and other substances to construct or repair walls, partitions, arches, sewers, and other structures. Exclude "Stonemasons". Classify installers of mortarless segmental concrete masonry wall units in "Landscaping and Grounds-keeping Workers".
3	**Carpenters – Acoustical Ceiling Installation**	Construct, erect, install, or repair the structure for acoustical ceiling tile.
4	**Carpenter – Rough**	Construct, erect, install, or repair structures and fixtures made of wood, such as concrete forms; building frameworks, including partitions, joists, studding, and rafters; wood stairways, window and door frames. May also install cabinets, and siding. Include brattice builders who build doors or brattices (ventilation walls or partitions) in underground passageways to control the proper circulation of air through the passageways.
5	**Carpenter – All Other Work**	Construct, erect, install or repair cabinets and other fixtures or structures requiring a high level of workmanship. Includes Cabinetmakers and Bench Carpenters – Cut, shape, and assemble wooden articles or set up and operate a variety of woodworking machines, such as power saws, jointers, and mortisers to surface, cut or shape lumber or to fabricate parts for wood products. Perform related duties such as trim work.
6	**Caulker / Sealers**	Applies water proofing agents or caulk to a variety of structures and materials
7	**Door & Hardware Specialist**	Installs doors, hardware and accessories.
8	**Drywall and Ceiling Tile Installers**	Apply plasterboard or other wallboard to ceilings or interior walls of buildings. Apply or mount acoustical tiles or blocks, strips, or sheets of sound-absorbing materials to ceilings and walls of buildings to reduce or reflect sound. Materials may be of decorative quality. Includes metal stud framing. Exclude "Carpet Installers", "Carpenters – Acoustical Ceiling Installation", and "Tile and Marble Setters".

9	**Drywall Finishers & Tapers**	Seal joints between plasterboard or other wallboard to prepare wall surface for painting or papering.
10	**Electrician**	Plan and execute the layout and installation of electrical conduit, switch panels, buss bars, outlet boxes, electrical wires and cables, lighting standards, lighting fixtures, receptacles, switches, and other electrical devices and apparatus necessary for the complete installation of wiring systems. Includes installation of photovoltaic solar panels.
11	**Electronic Technician**	Set-up, rearrange, or remove switching and dialing equipment used in central offices. Service or repair telephones and other communication equipment on customers' property. May install equipment in new locations or install wiring and telephone jacks in buildings under construction. Install, program, maintain, and repair security and fire alarm wiring and equipment. Ensure that work is in accordance with relevant codes. Exclude "Electricians" who do a broad range of electrical wiring.
12	**Elevator Installers and Repairers**	Assemble, install, repair, or maintain electric or hydraulic freight or passenger elevators, escalators, or dumbwaiters.
13	**Fence Erectors - Include with skilled labor**	Erect and repair metal and wooden fences and fence gates around highways, industrial establishments, residences, or farms, using hand and power tools. Excludes rock & stone fences.
14	**Floor Layers – Carpet and Resilient**	Apply blocks, strips, or sheets of shock-absorbing, sound-deadening, or decorative coverings to floors. Lay and install carpet from rolls, tiles or blocks on floors. Install padding and trim flooring materials. Installs variety of soft floor materials including vinyl and PCP. Exclude wood floors and specialty floors.
15	**Floor Layers - Specialty**	Prepares surface, installs and finishes specialty floor material such as that found in a gymnasium.
16	**Floor Layers - Wood**	Install, scrape and sand wooden floors to smooth surfaces using floor scraper and floor sanding machine, and apply coats of finish.
17	**Fork Lift Operator**	Person certified to operate a fork lift. (Industrial Forklift Operator is in Group 2 in the Heavy Schedule).
18	**Glaziers**	Install glass in windows, skylights, store fronts, and display cases, or on surfaces, such as building fronts, interior walls, ceilings, and tabletops.
19	**Hazardous Materials Removal Workers**	Identify, remove, pack, transport, or dispose of hazardous materials, including asbestos, lead-based paint, waste oil, fuel, transmission fluid, radioactive materials, contaminated soil, etc. Specialized training and certification in hazardous materials handling or a confined entry permit are generally required. May operate earth-moving equipment or trucks. Includes mold.
20	**Heating, Air Conditioning and Refrigeration Service Technician**	Repair and service heating, central air conditioning, or refrigeration systems, including oil burners, hot-air furnaces, and heating stoves. (Installation of systems are performed by sheet metal worker). Includes HVAC mechanic.

21	**Insulation Workers - F1oor, Ceiling, and Wall - Include with trade**	Line and cover structures with insulating materials. May work with batt, roll, or blown insulation materials. May spray material to seal, insulate, or soundproof sections of structure.
22	**Insulation Workers – Mechanical**	Apply insulating materials, adhesive and any other bonding materials to pipes, ductwork, tanks, boilers, expansion tanks, chiller tanks, grease ducts, valves, fittings, roof drains, or other mechanical systems in order to help control temperature.
23	**Irrigator- Landscape, Certified**	Certified to install watering systems in various sizes and grades of lawn in order to maintain sufficient pressure and to insure even dispersal of water.
24	**Laborer, Common**	A general term used on construction work covering many unskilled occupations. Performs unskilled manual duties in all phases of construction. May use tools and other necessary equipment. Does not ordinarily perform work permitting exercise of independent judgment.
25	**Laborer, Skilled**	Performs manual duties in all phases of construction. May use simple tools and other necessary equipment. May assist other workers by performing a variety of duties such as furnishing materials tools and supplies and holding materials or tools during installation. May work on different phases or areas of a project or with different crafts. Is often transferred from job to job. May direct the work of the common laborer. Has the ability to work without close supervision. Degree of independent judgment required varies with the task performed. Includes tenders and hod carriers.
26	**Landscaping and Grounds-keeping Workers – include with Common Labor**	Landscape or maintain grounds of property using hand or power tools or equipment. Workers typically perform a variety of tasks, which may include any combination of the following: sod laying, mowing, trimming, planting, watering, fertilizing, digging, raking, sprinkler repair, and installation of mortarless segmental concrete masonry wall units.
27	**Lather**	Installs light iron and metal furring such as rods, channels, and other bars or systems to which metal lath, rock lath, or other materials used as a substitute for lath are to be attached. Installs metal lath, rock lath, and other materials used as a substitute for lath. Installs metal plastering accessories such as corner beads, door and window casing beads, metal picture mold, chair rails, and other metals plastering accessories which are covered and/or serve as ground or guard.
28	**Locksmith**	Self explanatory.
29	**Manlift Operator - Include with trade**	Self-explanatory.
30	**Masons, Cement and Concrete Finishers**	Smooth and finish surfaces of poured concrete, such as floors, walks, sidewalks, roads, or curbs using a variety of hand and power tools. Align forms for sidewalks, curbs, or gutters; patch voids; use saws to cut expansion joints. Classify installers of mortarless segmental concrete masonry wall units in "Landscaping and Groundskeeping Workers".

31	**Mason, Rock**	Constructs partitions, fences, walks, etc., using rock. Cutting, grouting and pointing of materials listed above which is necessary shall be part of this classification. May also build or repair rock retaining walls. cutting or placing of rock in mortar or other similar material.
32	**Mason, Stone**	Constructs partitions, fences, walks, fireplaces, chimneys, smokestacks, etc., using stone, marble, granite, slate and artificial stone. Cutting, grouting, and pointing of materials listed above which is necessary shall be part of this classification. May also build or repair stone retaining wall, cutting or placing of stone in mortar or other similar material.
33	**Mechanic**	Maintains and repairs construction tools and equipment.
34	**Medical Gas Installer, Certified**	Assemble, install, alter, and repair pipelines or pipe systems that carry medical gases or liquids. Specialized training and certification required.
35	**Metal Building Erector**	Assembles prefabricated metal buildings according to blueprint specification, using hand tools, power tools, and hoisting equipment. Erects frame of building, using hoist. Bolts steel frame members together. Attaches wire and insulating materials to framework. Bolts sheet metal panels to framework. Reads blueprint to determine location of items, such as doors, windows, ventilators, and skylights and installs items, using cutting torch, wrenches, and power drill. Trims excess sheet metal, using cutting torch, power saw, and tin snips.
36	**Millwright**	Self-explanatory.
37	**Painters - Building**	Paint walls, equipment, buildings, bridges, and other structural surfaces, using brushes, rollers, and spray guns. May remove old paint to prepare surface prior to painting. May mix colors or oils to obtain desired color or consistency. Exclude "Paperhangers."
38	**Paper Hanger**	Measures, cuts, and hangs wallpaper.
39	**Pipelayers**	Lay pipe for storm or sanitation sewers, drains, and water mains. Perform any combination of the following tasks: grade trenches or culverts, position pipe, or seal joints.
40	**Pipe Fitters and Steamfitters**	Assemble, install, alter, and repair pipelines or pipe systems that carry water, steam, air, or other liquids or gases. May install heating and cooling equipment and mechanical control systems. Includes pressurized lines and flow lines for gas, air, and oil found in industrial settings. Includes persons, not certified, who install fire sprinklers.
41	**Plaster and Stucco Applicator**	Apply interior or exterior plaster, cement, stucco, or similar materials. May also set ornamental plaster. Applies interior and exterior plastering of stone imitation or any patented materials when cast. Applies acoustical plaster or materials used as substitutes for acoustical plaster, as well as the preparatory pointing and taping of drywall surfaces to receive these finishes. Applies scratch and brown coats on walls and ceilings where tile, mosaic or terrazzo is to be applied. Molds and sets ornamental plaster and trim and runs ornamental plaster cornice and molding. Installs metal corner beads when stuck by using plastic materials.

42	**Plumbers**	Assemble, install, alter, and repair pipelines or pipe systems that carry water, steam, air, or other liquids or gases. May install heating and cooling equipment and mechanical control systems.
43	**Reinforcing Iron and Rebar Workers**	Position and secure steel bars or mesh in concrete forms in order to reinforce concrete. Includes post-tensioning. Use a variety of fasteners, rod-bending machines, blowtorches, and hand tools. Include rod busters.
44	**Roofers**	Cover roofs of structures with shingles, tile, slate, asphalt, aluminum, wood, metal and related materials. May spray roofs, sidings, and walls with material to bind or seal sections of structures. Includes metal and membrane roofs.
45	**Sheet Metal Workers**	Fabricate, assemble, install, and repair sheet metal products and equipment, such as ducts, control boxes, drainpipes, architectural sheet metal, and furnace casings. Work may involve any of the following: setting up and operating fabricating machines to cut, bend, and straighten sheet metal; shaping metal over anvils, blocks, or forms using hammer; operating soldering and welding equipment to join sheet metal parts; inspecting, assembling, and smoothing seams and joints of burred surfaces. Include sheet metal duct installers who install prefabricated sheet metal ducts used for heating, air conditioning, or other purposes.
46	**Structural Iron and Steel Workers**	Raise, place, and unite iron or steel girders, columns, and other structural members to form completed structures or structural frameworks. May erect metal storage tanks and assemble prefabricated metal buildings. Exclude "Reinforcing Iron and Rebar Workers".
47	**Tile and Marble Setters**	Apply hard tile and marble to walls, floors, and ceilings. Includes Terrazzo.
48	**Truck Drivers, Heavy and Tractor-Trailer (Greater than 26,000 GVW)**	Drive a tractor-trailer combination or a truck with a capacity of at least 26,000 GVW, to transport and deliver goods, livestock, or materials in liquid, loose, or packaged form. May be required to unload truck. May require use of automated routing equipment. Requires commercial drivers' license.
49	**53-3033.00 - Truck Drivers, Light or (Under 26,000 GVW)**	Drive a truck or van with a capacity of under 26,000 GVW, primarily to deliver or pick up merchandise or to deliver packages within a specified area. May require use of automatic routing or location software. May load and unload truck. Exclude "Couriers and Messengers".

- **Welder -** Receives rate prescribed for craft performing operation to which welding is incidental.

LETTER OF COMMITMENT

A bidder/offeror may provide a letter of commitment or other similar document signed by a duly authorized agent of a surety that meets the requirements for sureties contained in these bid documents and the general conditions of the construction contract, wherein the surety commits to issue the performance and all other bonds required by these bid documents and the general conditions of the construction contract. Said commitment document shall specify the bidder/offeror and the project that is the subject of these bid documents by name and shall commit to issuing such bonds in the full amount of the contract amount in the event the bidder/offeror is awarded the contract under the terms of these bid documents.

The letter of commitment is not a substitute for the bid bond.

A bidder/offeror who provides the above described commitment letter shall not be required to provide the financial statements that are required on the following pages.

A letter of commitment is not required at the time the bid is submitted but is required upon request by the City. The City may request the letter of commitment anytime after opening the bids/offers and before submitting the proposed award of the construction contract to the El Paso City Council. Letter of commitment must be provided within five (5) consecutive calendar days of notification by the City. If the bidder/offeror does not provide the letter of commitment, then it must provide the financial information as specified in the pages that follow.

QUALIFICATION AND FINANCIAL DISCLOSURE STATEMENT
(To be provided by Bidder/Offeror within five days of request by City Engineer)

PROJECT: EPIA Checked Baggage Inspection System
SOLICITATION NO. 2016-963
BIDDER: _____

BUSINESS ADDRESS: _____

PHONE NUMBER: _____ FAX NUMBER: _____

1. Organization

1.1 How many years has your organization been in business as a contractor?

1.2 How many years has your organization been in business under its present business name?

1.2.1 Under what other or former names has your organization operated?

1.3 If your organization is a corporation, answer the following:

1.3.1 Date of incorporation: _____

1.3.2 State of incorporation: _____

1.3.3 President's name: _____

1.3.4 Vice-president's name(s): _____

_____

1.3.5 Secretary's name: _____

1.3.6 Treasurer's name: _____

1.4 If your organization is a partnership, answer the following:

1.4.1 Date of organization: _____

1.4.2 Type of partnership: (if applicable) _____

1.4.3 Name(s) of general partner(s): _____

_____

1.5 If your organization is individually owned, answer the following:

1.5.1 Date of organization: _____

1.5.2 Name of owner: _____

1.6 If the form of your organization is other than those listed above, describe it and name the principals:

2. Licensing

2.1 List jurisdictions and trade categories in which your organization is legally qualified to do business, and indicate registration or license numbers, if applicable.

2.2 List jurisdictions in which your organization's partnership or trade name is filed.

3. Experience

3.1 List the categories of work that your organization normally performs with its own forces.

3.2 Claims and suits. (If the answer to any of the questions below is yes, please attach details.)

3.2.1 Has your organization ever failed to complete any work awarded to it?

3.2.2 Are there any judgments, claims, arbitration, proceedings or suits pending or outstanding against its officers?

3.2.3 Has your organization filed any law suits or requested arbitration with regard to construction contracts within the last five years?

3.3 Within the last five years, has any officer or principal of your organization ever been an officer or principal of another organization when it failed to complete a construction contract? (If the answer is yes, please attach details.)

3.4 On a separate sheet, list major construction projects your organization has in progress, giving the name of project, owner, phone number, architects, contract amount, percent complete, scheduled completion date, and type of work performed by your work forces. Include names and phone numbers of contact persons for each project.

3.4.1 State total worth of work in progress and under contract:

3.5 On a separate sheet, list the major projects your organization has completed in the past five years, giving the name of project, owner, architect, contract amount, date of completion, the type of work performed by your work forces,

and percentage of the cost of the work performed with your own forces. Include names and phone numbers of contact persons for each project.

3.5.1 State average annual amount of construction work performed during the past five years:

3.6 On a separate sheet, list the construction experience and present commitments of the key individuals of your organization.

4. References

4.1 Trade References:

4.2 Bank References:

4.3 Surety:

Name of Bonding Company: _____

Name of address of agent: _____

_____

_____

5. Financing

5.1 Financial Statement

5.1.1 Attach a financial statement, preferably audited, including your organization's latest balance sheet and income statement showing the following items:

a. Cash Flow Statement

b. Notes to Financial Statement

c. Auditor Statement

d. Comparison Statements, if available

e. Current Assets (e.g., cash, joint venture accounts, accounts receivable, notes receivable, accrued income, deposits, materials inventory and prepaid expenses);

f. Net Fixed Assets;

g. Other Assets;

h. Current Liabilities (e.g. accounts payable, notes payable, accrued expenses, provision for income taxes, advances, accrued salaries and accrued payroll taxes);

i. Other Liabilities (e.g., capital, capital stock, authorized and outstanding shares par values, earned surplus and retained earnings).

5.1.2 Name and address of firm preparing attached financial statement, and date thereof:

5.1.3 Is the attached financial statement for the identical organization named on page one?

5.1.4 If not, explain the relationship and financial responsibility of the organization whose financial statement is provided (e.g., parent subsidiary).

5. Financing

5.2 Will the organization whose financial statement is attached act as guarantor of the contract for construction?

6. Signature

6.1 Dated at _____ this _____ day of _____ 20____.

Name of Organization: _____

By: _____
Signature

_____
Name printed or typed

Title: _____

6.2 _____ being duly sworn deposes and says that the information provided herein is true and sufficiently complete so as not to be misleading.

Subscribed and sworn before me this _____ day of _____, 20__.

_____
Notary Public

My Commission Expires: _____

THE STATE OF TEXAS }
COUNTY OF EL PASO }

CONTRACT

THIS AGREEMENT, made this _____ day of _____, 20_____ by and between THE CITY OF EL PASO, County of El Paso, Texas, hereinafter called "Owner", acting herein through its City Manager, Tomas Gonzalez and _____ (circle one of the following: a corporation, a partnership, an individual), located in: CITY OF _____, COUNTY OF _____ and STATE OF _____, hereinafter called "Contractor".

WITNESSETH: That for and in consideration of the payments and agreements hereinafter mentioned, to be made and performed by the Owner, the Contractor hereby agrees with the Owner to commence and complete the construction described as follows:

EPIA Checked Baggage Inspection System
CONTRACT NO. 2016-963

hereinafter called the "Project", for the sum of _____ Dollars and _____Cents ($_____), and all extra work in connection therewith, under the terms as stated in the contract documents; and at Contractor(s) own proper cost and expense to furnish all the materials, supplies, machinery, equipment, tools, superintendence, labor, insurance and other accessories and services necessary to complete the said Project, in accordance with the conditions and prices stated in the Proposal, the General Conditions, Supplemental General Conditions and Special Conditions of the Contract, the plans, which include all maps, plats, blueprints and other drawings and printed or written explanatory matter thereof, the specifications and contract documents thereof as furnished by the CITY ENGINEER or designated representative, and as enumerated in Paragraph 1.5 of the General Conditions, all of which are made a part hereof and collectively evidence and constitute the Contract.

The Contractor agrees to commence work on a date to be specified in a written “Notice to Proceed” issued by the Owner. The Contract Time shall begin on the date to commence work specified in the “Notice to Proceed” and shall run thereafter for **six hundred (600) CONSECUTIVE CALENDAR DAYS**. Contractor shall Substantially Complete the project within **five hundred seventy (570) CONSECUTIVE CALENDAR DAYS** after the date to commence work in the “Notice to Proceed.” Contractor agrees to pay, as liquidated damages, the sum of **two thousand ten dollars and zero cents ($2,010.00)** for each consecutive calendar day after the date of Substantial Completion, as hereinafter provided in the General Conditions. Contractor further agrees to pay as liquidated damages the sum of **one thousand seven hundred sixty dollars and zero cents ($1,760.00)** for each consecutive calendar day after the expiration of the Contract Time for Remaining Work, as provided in Paragraph 6.8.3.1 of the General Conditions. The unit price quantities of this contract are estimated.

Base Bid : $00.00 Total Award: $00.00

CONTRACT

IN WITNESS, WHEREOF, the parties to these presents have executed this Contract on the _____ day of _____, 20____ in two (2) counterparts, each of which shall be deemed an original, in the year and day first above mentioned.

OWNER – CITY OF EL PASO

by _____
Tomás Gonzalez, City Manager

APPROVED AS TO FORM:

_____
Assistant City Attorney

APPROVED AS TO CONTENT:

_____
Department Head

Contractor:

_____

by _____

_____
Typed Name & Title

_____
Address, City, State, Zip Code

_____ _____
Telephone Number Fax Number

If the Contractor be a corporation, the following certificate should be executed:

I, _____, certify that I am the _____ Secretary of the corporation named as Bidder, hereinabove; and that _____, who signed the foregoing Contract on behalf of the Bidder was then _____ of said corporation; that said proposal was duly signed for and in behalf of said corporation by authority of its governing body, and is within the scope of its corporate powers.

_____
CORPORATE SECRETARY SIGNATURE AND CORPORATE SEAL

PERFORMANCE BOND

(Value of this Bond must be 100% of Contract amount)

KNOW ALL MEN BY THESE PRESENTS:

THAT _____, hereinafter called the "Principal", as Principal and _____, a Corporation organized and existing under the laws of the State of _____ with its principal office in the City of _____, hereinafter called the "Surety", as Surety, are held and firmly bound unto THE CITY OF EL PASO, TEXAS, hereinafter called the "Obligee", in the amount of _____ Dollars and___ Cents ($_____), for the payment whereof, the said Principal and Surety bind themselves and their heirs, administrators, executors, successors and assigns, jointly and severally, firmly by these presents.

WHEREAS, the Principal has entered into a certain written Contract with the Obligee, dated the _____day of ___**,** 20___ to construct **EPIA Checked Baggage Inspection System. Contract No. 2016-963**, which Contract is hereby referred to and made a part hereof as fully and to the same extent as if copied at length herein.

NOW, THEREFORE, THE CONDITION OF THIS OBLIGATION IS SUCH that, if the said Principal shall faithfully perform the work in accordance with the plans, specifications and contract documents, then this obligation shall be void; otherwise, to remain in full force and effect.

PROVIDED, HOWEVER, that this Bond is executed pursuant to the provisions of Chapter 2253, Texas Government Code, as amended, and all liabilities on this Bond shall be determined in accordance with the provisions of said Chapter to the same extent as if it were copied at length herein. The Surety hereby waives notice of any change, including changes of time, to the construction contract, related subcontracts and purchase orders, which is made in accordance with Section 252.048, Texas Local Government Code.

IN WITNESS, WHEREOF, the said Principal and Surety have signed and sealed this instrument this _____ day of _____, 20___.

WITNESS: _____

ATTEST: _____

_____	_____ (Seal)
Principal - Company Name	Signed By (*Principal Agent*)
_____	_____
Address	Principal Agent's Name (Printed or Typed)
_____	_____
City, State, Zip Code	
_____	_____
Telephone No.	Fax No.
_____	_____ (Seal)
Surety - Company Name	Signed By (*Surety Agent*)
_____	_____
Address	Surety Agent's Name (Printed or Typed)
_____	
City, State, Zip Code	
_____	_____
Telephone No.	Fax No.

INSERT

POWER OF ATTORNEY

AFTER

PERFORMANCE BOND

<u>NOTE:</u>

- **DO NOT SUBSTITUTE BOND FORM**
- **BOND MUST BEAR FOUR (4) SIGNATURES: (1) WITNESS, (2) ATTEST, (3) CONTRACTOR AND (4) ATTORNEY-IN-FACT**
- **DATE ON POWER OF ATTORNEY MUST BE SAME AS DATE ON BOND**
- **SEPARATE POWER OF ATTORNEY FORMS MUST BE PROVIDED FOR EACH BOND (PERFORMANCE & PAYMENT BOND)**
- **AGENT RESIDENT DESIGNATION MUST CONTAIN SURETY'S SEAL, ASSIGNMENT BY SURETY AGENT, AND ACKNOWLEDGMENT OF SUCH ASSIGNMENT BY AGENT RESIDENT.**

PAYMENT BOND

(Value of this Bond must be 100% of Contract amount)

KNOW ALL MEN BY THESE PRESENTS:

THAT _____, hereinafter called the "Principal", as Principal and _____, a Corporation organized and existing under the laws of the State of _____ with its principal office in the City of _____, hereinafter called the "Surety", as Surety, are held and firmly bound unto THE CITY OF EL PASO, TEXAS, hereinafter called the "Obligee", in the amount of _____ Dollars and____ Cents **($_____)**, for the payment whereof, the said Principal and Surety bind themselves and their heirs, administrators, executors, successors and assigns, jointly and severally, firmly by these presents.

WHEREAS, the Principal has entered into a certain written Contract with the Obligee, dated the _____ day of ____**,** 20___, to construct **EPIA Checked Baggage Inspection System,** Contract No. **2016-963,** which Contract is hereby referred to and made a part hereof as fully and to the same extent as if copied at length herein.

NOW, THEREFORE, THE CONDITION OF THIS OBLIGATION IS SUCH that, if the said Principal shall pay all claimants supplying labor and materials to him, or a subcontractor in the prosecution of the work provided for in said Contract, then this obligation shall be void; otherwise, to remain in full force and effect.

PROVIDED, HOWEVER, that this Bond is executed pursuant to the provisions of Chapter 2253, Texas Government Code, as amended, and all liabilities on this Bond shall be determined in accordance with the provisions of said Chapter to the same extent as if it were copied at length herein.

IN WITNESS, WHEREOF, the said Principal and Surety have signed and sealed this instrument this _____ day of _____, 20____.

WITNESS: _____

ATTEST: _____

_____	_____ (Seal)
Principal - Company Name	Signed By (*Principal Agent*)
_____	_____
Address	Principal Agent's Name (Printed or Typed)
_____	_____
City, State, Zip Code	
_____	_____
Telephone No.	Fax No.
_____	_____ (Seal)
Surety - Company Name	Signed By (*Surety Agent*)
_____	_____
Address	Surety Agent's Name (Printed or Typed)
_____	
City, State, Zip Code	
_____	_____
Telephone No.	Fax No.

INSERT

POWER OF ATTORNEY

AFTER

PAYMENT BOND

<u>NOTE:</u>

- **DO NOT SUBSTITUTE BOND FORM**
- **BOND MUST BEAR FOUR (4) SIGNATURES: (1) WITNESS, (2) ATTEST, (3) CONTRACTOR AND (4) ATTORNEY-IN-FACT**
- **DATE ON POWER OF ATTORNEY MUST BE SAME AS DATE ON BOND**
- **A SEPARATE POWER OF ATTORNEY FORM MUST BE PROVIDED FOR EACH BOND (PERFORMANCE & PAYMENT BOND)**
- **AGENT RESIDENT DESIGNATION MUST CONTAIN SURETY'S SEAL, ASSIGNMENT BY SURETY AGENT, AND ACKNOWLEDGMENT OF SUCH ASSIGNMENT BY AGENT RESIDENT.**

AGENT RESIDENT DESIGNATION

EPIA Checked Baggage Inspection System
Contract No. 2016-963

SURETY INFORMATION

_____, as Surety on the Performance and Payment Bonds for this contract, hereby appoints the following resident agent who resides within the County of El Paso and to whom any requisite notices may be delivered and on whom service of process may be had in matters arising out of suretyship, pursuant to Article 7.19-1 of the Texas Insurance Code and Chapter 2253, Texas Government Code.

Assigned By:

_____(Seal)
Surety Agent

_____
Surety Agent's Signature

_____
Date

AGENT INFORMATION

Agent Resident:_____

Business Address:_____

_____

Telephone & Fax Nos. _____

Acknowledged By:

_____
Agent Resident's Name (Printed or Typed)

_____
Agent Resident's Signature

NOTIFICATION TO CONSTRUCTION CONTRACTORS

INSURANCE REQUIREMENTS

Note: Refer to the Contract General Conditions, Paragraphs 5.11 through 5.12 for complete insurance requirements for this project.

1. Commercial General Liability, Property Damage Liability, and Vehicle Liability Insurance Requirements:

Commercial General Liability Bodily Injury	$1,000,000.00 each person
Property Damage	$1,000,000.00 each occurrence
General Aggregate	$2,000,000.00
Vehicle Liability <u>(Any Auto)</u> Combined Single Limit	$1,000,000.00

2. Builder's Risk Insurance (fire and extended coverage) for certain projects is required for 100% of the completed value only when designated on p. II.E.1.A

3. The City of El Paso shall be named as an *Additional Insured* on all insurance policies except Workers' Compensation Insurance Coverage shall be provided by endorsement to the policy of insurance. The project name, type, amount, class of operations covered, effective dates and dates of expiration of policies shall be shown on certificate.

4. Statutory Texas Workers' Compensation Insurance Coverage:

   Workers' Compensation policy shall be endorsed to provide that the insurer waives any right of subrogation it may require against the Owner, the Architect/Engineer of Record and Construction Manager where applicable, see General Conditions, 5.12.

5. A 30-day notice of policy cancellation or material alteration.

6. **Important:**

   The language of the cancellation notice must substantially contain the **<u>unconditional</u>** statement: "Should any of the described policies be canceled or materially altered before the expiration date, the issuing company shall provide thirty (30) days written notice to the Owner-City of El Paso by certified mail." See General Conditions 5.11 (E); the words ***"endeavor to notify"*** and ***"failure to notify shall impose no obligation or liability upon the company ..."*** **are not acceptable**.

<u>SPECIAL NOTE:</u>

Worker's Compensation, Waiver of Subrogation, City of El Paso named as an Additional Insured and the 30-day cancellation notice must all be done through endorsement by the insurer. The document may be an endorsement, a rider or an amendment to the policy and it must include the policy number.

Builder's Risk Insurance (fire and extended coverage) **IS REQUIRED** for:

EPIA Checked Baggage Inspection System

Solicitation No. 2016-963

(***100 % OF COMPLETED VALUE)***. ***As follows: TBD***

INSERT

INSURANCE CERTIFICATE

HERE

- BUILDER'S RISK COVERAGE REQUIRED FOR ALL BUILDING PROJECTS
- CITY OF EL PASO MUST BE SHOWN AS AN "ADDITIONAL INSURED" ON GENERAL LIABILITY AND AUTOMOBILE LIABILITY
- WORKERS' COMPENSATION CERTIFICATE MUST SHOW A WAIVER OF SUBROGATION AGAINST THE OWNER/CITY, ARCHITECT/ENGINEER AND CONSTRUCTION MANAGER, WHERE APPLICABLE
- ALL ENDORSEMENTS MUST CONTAIN THE FOLLOWING UNCONDITIONAL STATEMENT REGARDING CANCELLATION: "Should any of the described policies be canceled <u>or materially altered</u> before the expiration date, the issuing company shall provide thirty (30) days written notice to the Owner-City of El Paso by certified mail." See General Conditions 5.11 (E); the words *"endeavor to notify"* and *"failure to notify shall impose no obligation or liability upon the company..."* are not acceptable

CERTIFICATE OF OWNER'S ATTORNEY

EPIA Checked Baggage Inspection System

CONTRACT NO. 2016-963

I, the undersigned, as Assistant City Attorney, the duly authorized and acting legal representative of the City of El Paso, do hereby certify as follows:

I have examined the attached contract(s) and surety bonds and the manner of execution thereof, and I am of the opinion that each of the aforesaid agreements has been duly executed by the proper parties thereto, acting through their duly authorized representative; that said representatives have full power and authority to execute said agreements on behalf of the respective parties named thereon; and that the foregoing agreements constitute valid and legally binding obligations upon the parties executing the same, in accordance with the terms, conditions and provisions thereof.

This certification applies only to officials of the City of El Paso and does not purport to apply to any party entering this contract with the City.

_____
Assistant City Attorney

_____
Date

CITY OF EL PASO, TEXAS
CONSTRUCTION CONTRACT
GENERAL CONDITIONS

Table of Contents

1.0 TERMS OF CONTRACT AND DEFINITIONS

1.1 Contract and Contract Documents
1.2 Definitions
1.3 Abbreviations
1.4 Conflicting Conditions
1.5 Enumeration of Plans, Specifications & Addenda

2.0 SCOPE OF WORK

2.1 Intent of Contract
2.2 Changes and Alterations
2.3 Differing Site/Concealed Conditions
2.4 Quantities of Estimate
2.5 Change Orders and Claims for Extra Work
2.6 Maintenance and Protection of Traffic
2.7 Additional Instructions and Detail Drawings
2.8 Shop or Setting Drawings
2.9 Conformity with Plans and Specifications
2.10 Use of Premises and Removal of Debris
2.11 Clean Up
2.12 Surveys, Permits and Regulations
2.13 Land and Right-of-Way

3.0 CONTROL OF WORK

3.1 Engineering City Engineer’s Authority/ Owner's Designated Representative
3.2 Construction Management
3.3 Reports, Records and Data
3.4 Cooperation with Utilities
3.5 Cooperation between Contractors
3.6 Inspection
3.7 Acceptance of the Work

4.0 CONTROL OF MATERIALS

4.1 Source of Supply and Quality Requirement
4.2 Contractor's Title of Materials
4.3 "Or Equal" Clause
4.4 Inspection and Testing of Materials
4.5 Rights in and Use of Materials Found on the Work Site
4.6 Handling Materials

4.7 Disposal of Materials outside the Work Site
4.8 Unacceptable Materials

5.0 CONTRACTOR'S RESPONSIBILITIES AND LEGAL OBLIGATIONS

5.1 Laws to be observed
5.2 Provisions Required by Law Deemed Inserted
5.3 Patented Devices, Materials and Processes
5.4 Public Convenience and Safety
5.5 Use of Explosives
5.6 Protection of Work and Property
5.7 Protection of Work and Property - Emergency
5.8 Protection of Work and Property - Monitor Wells
5.9 Mutual Responsibility of Contractor
5.10 Indemnification
5.11 Insurance
5.12 Texas Workers' Compensation Requirements
5.13 Contract Security
5.14 Additional or Substitute Bond
5.15 Contractor's Obligations
5.16 Correction of Work
5.17 Warranty of Construction
5.18 Use and Occupancy Prior to Acceptance by Owner
5.19 Contractor's Responsibilities for Utility Property and Services
5.20 Obligation for Temporary Electrical Power
5.21 Environmental Protection
5.22 Texas Pollutant Discharge Elimination System (TPDES) Requirements
5.23 Prevailing Wage Rates and Wage Rate Penalty
5.24 Apprentices
5.25 Apprenticeship Program

6.0 PROSECUTION AND PROGRESS

6.1 Subcontracting
6.2 Notice and Service Thereof
6.3 Progress Schedule
6.4 Limitation of Operations
6.5 Character of Workmen; Methods and Equipment
6.6 Progress Photographs
6.7 Suspension of Work
6.8 Time for Completion and Liquidated Damages
6.9 Right of Owner to Terminate Contract
6.10 Default of Contract

7.0 PAYMENTS

7.1 Construction Schedule and Periodic Estimate
7.2 Progress Payments
7.3 Assignments
7.4 Acceptance of Final Payment Constitutes Release
7.5 Payrolls and Basic Records

8.0 DISPUTES AND REMEDIES

8.1 Dispute Resolution
8.2 Governing Law
8.3 Rights and Remedies
8.4 Illegality

9.0 RECORDS/AUDIT

CONSTRUCTION CONTRACT
GENERAL CONDITIONS

1.0 TERMS OF CONTRACT AND DEFINITIONS

1.1 Contract and Contract Documents

1.1.1 The Plans, Specifications and Addenda, hereinafter enumerated in Paragraph 1.5 of the General Conditions, shall form part of this contract and the provisions thereof shall be as binding upon the parties hereto as if they were herein fully set forth. The table of contents, titles, headings, running headlines and marginal notes contained herein and in said documents are solely to facilitate reference to various provisions of the contract documents and in no way affect, limit or cast light on the interpretation of the provisions to which they refer.

1.1.2 The specifications, the accompanying plans, special provisions and supplemental agreements are essential parts of this contract, and a requirement occurring in one is as binding as though occurring in all. They are intended to describe and provide for a complete project. In the event that there are differences between the contract documents, the following rules shall govern:

1.1.2.1 Written figured dimensions shall govern over scaled dimensions;

1.1.2.2 General Conditions shall govern over specific provisions;

1.1.2.3 Performance specifications shall govern over design specifications if they call for specific results;

1.1.2.4 Specifications shall govern over plans; and

1.1.2.5 Special provisions shall govern over both specifications and plans.

1.1.3 Where conflicts/differences exist, the Contractor has a duty to and shall consult with and obtain written clarification from the Design Engineer/Architect.

1.1.4 Any certificates required by a federal agency or other special funding source, and any conditions supplementing these general conditions shall be fully binding on the parties and shall supersede any contradicting provisions contained herein.

1.1.5 The Contractor shall take no advantage of any apparent error or omission in the plans or specifications. In the event the Contractor discovers such an error or omission, the City Engineer shall be promptly notified. The City Engineer will then make such corrections and interpretations as may be deemed necessary for fulfilling the intent of the plans and specifications.

1.2 Definitions

1.2.1 The following terms, as used in this contract, are respectively defined as follows:

1.2.1.1 "Contractor" - The person, firm, partnership or corporation who undertakes to perform the work specified in this contract. The Contractor is an independent contractor, and shall be solely responsible for its acts or omissions arising from or relating to its performance of this Agreement. The Contractor is not an employee or agent of the City of El Paso by reason of this Agreement or otherwise.

1.2.1.2 “Contract Time” means the number of consecutive calendar days specified in the contract immediately after the date to commence work issued by Owner in the Notice to Proceed and includes both the time allowed for completion of the work required to achieve Substantial Completion and the time allowed to complete the Remaining Work.

1.2.1.3 “Remaining Work” means the work required by the Contract, but not required for Substantial Completion, that the City Engineer determines has not been satisfactorily completed at the time of Substantial Completion and all maintenance and operating instructions, schedules, guarantees, warranties, bonds, certificates of inspection, marked-up record documents, prevailing wage compliance reports and other documents as required by the Contract. “Remaining Work” may also be referred to as “Punch List” work.

1.2.1.4 "Subcontractor" - A person, firm, partnership or corporation supplying labor and materials, or only labor, for work at the site of the project for and under separate contract or agreement with the Contractor.

1.2.1.5 "Work on/at the Project" - Work to be performed at the location of the project, including the transportation of materials and supplies to or from the location of the project by employees of the Contractor and any Subcontractor.

1.2.1.6 "Substantially Complete" - A project is substantially complete on the date when the construction is sufficiently complete, in accordance with the contract documents, so that the Owner may occupy or utilize the work or designated portion thereof for the use for which it is intended as expressed in the contract documents.

1.3 Abbreviations

Wherever the following abbreviations are used in the contract documents, they are to be construed the same as the respective expressions represented:

A.A.S.H.T.O.	American Association of State Highway and Transportation Officials
A.C.I.	American Concrete Institute
A.I.A.	American Institute of Architects
A.I.S.C.	American Institute of Steel Construction
A.N.S.I.	American National Standards Institute
C.B.R.	California Bearing Ratio
C.R.S.I.	Concrete Reinforcing Steel Institute
C.Y. or Cu. Yd .	Cubic Yard
Dia. or Diam.	Diameter
E.P.A.	Environmental Protection Agency
F.A.A.	Federal Aviation Administration
Ft.	Foot or Feet
In.	Inch or Inches
Lb.	Pound
L.F. or Lin. Ft.	Linear Foot (Feet)
L.S.	Lump Sum
N.E.C.	National Electrical Code
N.R.M.C.A.	National Ready Mixed Concrete Assoc.
O.S.H.A.	Occupational Safety and Health Administration
P.C.A.	Portland Cement Association
P.C.I.	Prestressed Concrete Institute
S.Y. or Sq. Yd.	Square Yard
T.D.O.T.	Texas Department of Transportation

1.4 Conflicting Conditions

Any provisions in any of the contract documents which may be in conflict or inconsistent with any of the paragraphs in these General Conditions shall be void to the extent of such conflict or inconsistency, except as stated in Paragraph 1.1.

1.5 Enumeration of Plans, Specifications, and Addenda *(Revised 12/3/04)*

The plans, specifications and addenda which form a part of this contract, as set forth in Paragraph 1.1 of the General Conditions, "Contract and Contract Documents", are attached hereto and incorporated herein by reference.

2.0 SCOPE OF WORK

2.1 Intent of Contract

It is the intent of the contract documents to describe a functionally complete project to be constructed to its completion in every detail of the work described. The Contractor shall furnish all labor, materials, equipment, transportation, and supplies required to complete the work in accordance with the plans, specifications, and terms and conditions of the contract.

2.2 Changes and Alterations

2.2.1 The Contractor further agrees that the Owner may make such changes and alterations as the Owner may see fit, in the line, grade, form, dimensions,

plans or materials for the work herein contemplated, or any part thereof, either before or after the beginning of construction without affecting the validity of this contract and the accompanying bond.

2.2.2 If such changes or alterations diminish the quantity of the work to be done, they shall not constitute the basis for a claim for damages, or anticipated profits on the work that may be dispensed with. If they increase the amount of work, and the increased work can fairly be classified under the specifications, such increase shall be paid according to the quantity actually done and at the unit price established for such work under this contract; otherwise, such additional work shall be paid for as provided under Paragraph 2.5, as it relates to extra work.

2.2.3.1 In case the Owner shall make such changes or alterations as shall make useless any work already done or material already furnished or used in said work, then the Owner shall recompense the Contractor for any material or labor so used and for any actual loss occasioned by such change, due to actual expenses incurred in preparation for the work, as originally planned.

2.3 Differing Site/Concealed Conditions

Should the Contractor encounter subsurface or latent conditions at the site or concealed or unknown conditions in an existing structure materially differing from those shown on the plans or indicated in the specifications, the Contractor shall immediately give notice to the Owner's designated representative of such conditions before they are disturbed. The Owner's designated representative will thereupon promptly investigate the conditions, and if he/she finds that they materially differ from those shown on the plans or indicated in the specifications, he/she will at once make such changes in the plans or specifications as he/she may find necessary, any increase or decrease of cost resulting from such changes shall be adjusted in the manner provided in Paragraph 2.5 herein.

2.4 Quantities of Estimate

Wherever the estimated quantities of work to be done and materials to be furnished under this contract are shown in any of the documents, including the proposal, they are given for use in comparing bids and the right is expressly reserved, except as herein otherwise specifically limited, to increase or diminish them as may be deemed reasonably necessary or desirable by the Owner to complete the work contemplated by this contract, and such increase or diminution shall in no way violate this contract, nor shall any such increase or diminution give cause for claims of liability for damages.

2.5 Change Orders and Claims for Extra Work

2.5.1 <u>Without invalidating the contract or the accompanying Payment or Performance Bond and without obtaining the consent of the Surety or Sureties</u>, the Owner may, in accordance with applicable state law, order extra work or make changes by altering, adding to or deducting from the work, the contract sum being adjusted accordingly. Any changes in the work ordered and approved by the Owner shall become a part of the contract work and shall be covered by the accompanying Payment and

Performance Bonds. All the work of the kind bid upon shall be paid for at the price stipulated in the proposal and **no claims for any extra work or materials shall be allowed unless the work is ordered in writing by the Owner or Owner's designated representative, acting officially for the Owner, in accordance with applicable state law, and the price is stated in such order.** Additional time for change orders or utilities delays, which affect the contractor, shall be considered estimates upon their granting. The Owner reserves the right to review the actual time utilized by the contractor in the completion of the additional work of the change order at the termination of the project. Owner shall then adjust time granted per change order to reflect the actual time required by the contractor for the completion of each change order.

2.5.2 **NO CHANGES IN THE WORK COVERED BY THE APPROVED CONTRACT SHALL BE MADE WITHOUT HAVING PRIOR WRITTEN APPROVAL OF THE OWNER OR OWNER'S DESIGNATED REPRESENTATIVE AS AFORESAID.** Charges or credits for the work covered by the approved change shall be determined by one or more, or a combination of the following methods:

2.5.2.1 Unit Bid prices previously approved.

2.5.2.2 An agreed lump sum.

2.5.2.3 The actual cost of:

2.5.2.3.1 Labor, including foreman;

2.5.2.3.2 Materials and supplies, entering permanently into the work;

2.5.2.3.3 Ownership or rental cost of construction plant and equipment during the time of use on the extra work;

2.5.2.3.4 Power and consumable supplies for the operation of power equipment;

2.5.2.3.5 Public Liability and Property Damage, Worker's Compensation and all other insurances as may be required by law or ordinances, or directed by the Owner or the Owner's Representative, or by them agreed to, and;

2.5.2.3.6 Social Security, Old Age, Unemployment Contributions and Maintenance Bonds

2.5.2.4 To the cost under subparagraph 2.5.2.3 above, there shall be added a fixed fee to be agreed upon but not to exceed fifteen percent (15%) of the actual cost of the work. The fee shall be compensation to cover the cost of supervision, overhead, bond, profit and any other general expenses.

2.5.3 **No claim for extra work or cost shall be allowed unless the same was done in pursuance of a written order of the Owner's designated representative**, approved by the Owner, as aforesaid. Upon receipt of a change order cost proposal from the contractor, the owner shall have fourteen (14) calendar days in which to respond to the proposal. When work is performed under the terms of subparagraph 2.5.2.3 above, the Contractor shall furnish satisfactory bills, payrolls and vouchers covering all items of cost and, when requested by the Owner, access to accounts relating thereto.

2.6 Maintenance and Protection of Traffic

2.6.1 The Contractor shall make all necessary precautions to guard against damages to property and injury to persons. The Contractor shall prepare a traffic control plan acceptable to and approved by the Traffic Engineer or his/her representative.

2.6.2 **Guidelines for Traffic Control Plans**. A plan, drawn to scale and with the following information, is required for any activity which requires the use of the roadway or adjacent pedestrian walkway in conjunction with any street cut permit, building permit, site development permit, drainage development permit, special privilege permit, or any roadway construction.

2.6.2.1 Activity location, right-of-way, and curb lines of the street or pedestrian walkway sought to be closed or blocked.

2.6.2.2 Area of street or pedestrian walkway to be closed

2.6.2.3 Proposed detour routes.

2.6.2.4 Location and type of all barricades, signals, signs, cones, and other warning devices

2.6.2.5 The times of the day, and the total number of days, the applicant seeks to block the streets or Pedestrian walkway.

2.6.2.6 The construction zone traffic control design and plans shall conform to the specifications and principles of the "Texas Manual of Traffic Control Devices", Part VI 1980 Edition, latest revision, issued by the Texas Department of Transportation.

2.6.3 Traffic control plans will be submitted to the Engineering Department Traffic Division for approval. Any work performed on streets or pedestrian walkways, without an approved traffic control plan, will be stopped and may be subject to any penalties as per the El Paso Municipal Codes.

2.6.4 The Contractor shall put up and maintain in good condition, sufficient warning lights at night and suitable barricades and other devices necessary to protect the public. In case the Contractor fails or neglects to take such precautions, the Owner shall notify and allow the contractor four hours in which to install or restore to working order all devices necessary to protect the public. If the Contractor does not comply, the Owner shall install lights

and barricades and the cost of the work shall be charged to the Contractor. Such action by the Owner does not relieve the Contractor of any liability incurred under these specifications or the contract.

2.6.5 The Contractor will be held responsible for all damage to the work due to failure of barricades, signs and lights to protect it, and when damage is incurred, the damaged portion shall be immediately removed and replaced by Contractor at his own cost and expense. The Contractor's responsibility for maintenance of barricades, signs and lights shall not cease until the date of issuance to Contractor of City's certificate of substantial completion of the project.

2.6.6 **Description**: These specifications shall govern for the handling of traffic around and through the area during all phases of construction and the furnishing of all barricades, flags, flagmen and other essentials necessary to complete this work as required on the plans and in this specification.

2.6.7 **Barricades, Flags, Warning Signs, etc.**: Barricades, flags, warning signs, etc., shall conform to specifications given in the latest edition of the *Texas Manual on Uniform Traffic Control Devices*, Part VI, issued by the Texas State Department of Highways and Public Transportation, hereinafter called the manual, a copy of which is on file in the office of the Traffic Engineer, Engineering Department, City of El Paso.

2.6.8 **Sequence of Operations**: Sequence of operations shall be called for on the approved plans by the Traffic Engineer.

2.6.9 Before removal of barricades and other traffic control signs, the Contractor shall notify the Traffic Engineer of the Contractor's intent. Advance warning shall be given in sufficient time to permit the Director to install traffic control devices (striping, signs, etc.) before any street is reopened to traffic.

2.6.10 **Payment:** Payment for the furnishings of barricades, flags, flares, warning signs, flagmen and other incidentals and inconveniences necessary for the accomplishment of the work and objectives stated herein will not be made directly. The cost of such devices, if any, should be included in the amount bid, but not as a separate line item.

2.7 Additional Instructions and Detail Drawings

2.7.1 The Contractor will be furnished additional instructions and detail drawings as necessary to carry out the work included in the contract. The additional drawings and instructions thus supplied to the Contractor will coordinate with the contract documents and will be so prepared that they can be reasonably interpreted as part thereof. The Contractor shall carry out the work in accordance with the additional detail drawings and instructions. The Contractor and the Owner's designated representative will prepare jointly:

2.7.2 A schedule fixing the dates at which special detail drawings will be required, such drawings, if any to be furnished by the Owner's designated

representative in accordance with said schedule; and A schedule fixing the respective dates for the submission of shop drawings, the beginning of manufacture, testing and installation of materials, supplies and equipment, and the completion of the various parts of the work; each sum schedule to be subject to change from time to time in accordance with the progress of the work.

2.8 Shop or Setting Drawings

2.8.1 The Contractor shall submit promptly to the Owner's designated representative five (5) copies of each shop or setting drawings prepared in accordance with the schedule predetermined in accordance with Paragraph 2.7 herein. After examination of such drawings by the Owner's designated representative and the return thereof, the Contractor shall make such corrections to the drawings as have been indicated and shall furnish the Owner's designated representative a minimum of four (4) sets.

2.8.2 The Contractor shall, nevertheless, be responsible for the accuracy of such drawings and for their conformity to the plans and specifications, unless he/she notifies the Owner's designated representative in writing of any deviations at the time he/she furnishes such drawings.

2.9 Conformity with Plans and Specifications

2.9.1 All work performed and all materials furnished shall conform to the lines, grades, cross sections, dimensions, and material requirements, including tolerances, shown on the plans or indicated in the specifications.

2.9.2 Plan dimensions and contract specification values are to be considered as the target values to be strived for and complied with as the design values from which any deviations are allowed. It is the intent of the specifications that the materials and workmanship shall be uniform in character and shall conform as nearly as possible to the prescribed target value or the middle portion of the tolerance range. The purpose of the tolerance range is to accommodate occasional minor variations from the median zone that are unavoidable for practical reasons. When either a maximum and minimum value or both are specified, the production and processing of the material and the performance of the work shall be so controlled that material or work will not be preponderantly of borderline quality or dimension.

2.9.3 In the event the City Engineer finds the materials furnished, work performed, or the finished product not in conformance with the plans and specifications but that acceptable work has been produced, the City Engineer shall then make a determination as to whether the work shall be accepted and remain in place. In this event, the City Engineer will document the basis of acceptance by contract modification which will provide for an appropriate adjustment in the contract price for such work or materials necessary to conform to his determination.

2.9.4 In the event the City Engineer finds the materials or the finished product in which the materials are used are not in conformance with the plans and

specifications, and have resulted in an unsatisfactory or unacceptable product, the work or materials shall be removed and replaced or otherwise corrected by and at the expense of the Contractor in a manner satisfactory to the City Engineer.

2.10 Use of Premises and Removal of Debris

2.10.1 The Contractor expressly undertakes at his/her own expense:

2.10.1.1 To take every precaution against injuries to persons or damage to property;

2.10.1.2 To store his/her apparatus, materials, supplies and equipment in such orderly fashion at the site of the work as will not unduly interfere with the progress of his/her work or the work of any other contractors;

2.10.1.3 To place upon the work or any part thereof only such loads as are consistent with the safety of that portion of the work;

2.10.1.4 To clean up frequently all refuse, rubbish, scrap materials and debris caused by his/her operations, to the end that at all times the site of the work shall present a neat, orderly and workmanlike appearance;

2.10.1.5 Before final payment to remove all surplus material, false-work temporary structures, including foundations thereof, plant of any description and debris of every nature resulting from his/her operations, and to put the site in a neat, orderly condition;

2.10.1.6 To affect all cutting, fitting or patching of his/her work required to make the same to conform to the plans and specifications and except with the consent of the Owner's designated representative, not to cut or otherwise alter the work of any other contractor.

2.11 Clean Up

The Contractor shall throughout the life of the contract keep his work and storage areas free of accumulations of waste materials, rubbish, trash, and debris. Before final inspection of the work, all waste and surplus material, trash, rubbish, debris, and equipment shall be removed from the project site, material site, and other areas occupied by him in connection with the work. All areas shall be left in a neat and presentable condition.

2.12 Surveys, Permits and Regulations

2.12.1 The Owner will establish horizontal and vertical control only. The Contractor must furnish all additional stakes for the layout and construction of the project.

2.12.2 The work to be done shall be staked out by the Contractor from line and grade control stakes furnished by the Owner or Owner's designated representative. Only the minimum number of control stakes will be furnished by the Owner or Owner's designated representative to define the lines and grades to be used by the Contractor in laying out the work.

2.12.3 The Contractor shall give the Owner at least thirty six (36) hours notice in writing before requiring that control stakes be set out.

2.12.4 The Contractor must satisfy himself before commencing work as to the meaning or correctness of all control stakes or marks, and no claims will be considered by the Owner for or on account of any alleged inaccuracies, unless the Contractor notifies the Owner thereof in writing before commencing the work thereon.

2.12.5 The Contractor will be held responsible for the preservation of all such control stakes and marks in their position, and in case any of them are lost or destroyed, all expenses incurred by the Owner in replacing same shall be charged against the Contractor and paid for by him/her before the completion and final acceptance of the work.

2.12.6 The Contractor shall procure and pay for all applicable permits, licenses, and approvals necessary for the execution of the contract. Fees for permits issued by the City's Department of Building Services will be waived for work done at facilities owned or managed by the Owner. Fees, licenses, and permits pertaining to the collection, transport, and disposal of waste materials from the project shall be paid by the Contractor.

2.12.7 The Contractor shall comply with all laws, ordinances, rules, orders and regulations relating to performance of the work, the protection of adjacent property and the maintenance of passage-ways, guard fences, lateral supports or other protective facilities.

2.13 Land and Right-of-Way

2.13.1 Prior to the start of construction, the Owner shall obtain all land and right-of-way necessary for the carrying out of and completion of work to be performed under this contract.

2.13.2 The Owner's designated representative must be notified twenty-four (24) hours in advance of any work involving the placement of curbs, pavement or storm sewers on City right-of-way.

3.0 CONTROL OF WORK

3.1 City Engineer's Authority/Owner's Designated Representative

3.1.1 The City Engineer shall give all orders and directions contemplated under this contract and specifications relative to the execution of the work. The City Engineer shall determine the amount, quality, acceptability and fitness of the several kinds of work and materials which may arise in relation to

said work and the construction thereof. The City Engineer's estimates and decisions shall be final and conclusive except as herein otherwise expressly provided. In case any questions shall arise between the parties hereto relative to this contract or specifications, the determination or decision of the City Engineer shall be a condition precedent to the right of the Contractor to receive any money or payment for work under this contract affected in any manner or to any extent by such question. The City Engineer shall decide the meaning and intent of any portion of the specifications and of any plans or drawings where the same may be found obscure or be in dispute. Any differences or conflicts in regard to their work which may arise between the Contractor under this contract and other contractors performing the work for the Owner shall be adjusted and determined by the City Engineer.

3.1.2 The City Engineer may designate, in writing, an Architect/Engineer or another competent agent to act as his/her representative in the exercise of the authority of the City Engineer as set forth in this clause.

3.2 Construction Management

3.2.1 **Authority and Duties of the Construction Engineer:**

As the direct representative of the City Engineer, the Construction Engineer has immediate charge of the engineering details of each construction project and is responsible for the administration and satisfactory completion of the project.

3.2.2 **Duties of the Inspector**:

Inspectors employed by the City of El Paso Engineering Department will be authorized to inspect all work done and materials furnished. Such inspection may extend to all or any part of the work and to the preparation, fabrication, or manufacture of the materials to be used. The Inspector will not be authorized to alter or waive the provisions of the contract. The Inspector will not be authorized to issue instructions contrary to the plans and specifications, or to act as foreman for the Contractor; however, the Inspector shall have the authority to reject work or materials until any questions at issue can be referred to and decided by the City Engineer.

3.3 Reports, Records and Data

The Contractor shall submit to the Owner or Owner's designated representative such schedule of quantities and costs, progress schedules, payrolls, reports, estimates, records and other data as the Owner or Owner's designated representative may request concerning work performed or to be performed under this contract.

3.4 Cooperation with Utilities

3.4.1 It is strongly recommended that the Contractor visit and familiarize himself with the project site prior to submitting bids.

3.4.2 The Contractor shall coordinate the construction schedule with all utilities

and all other affected agencies.

3.4.3 The Contractor shall, at no additional cost to the Owner, be responsible for the replacement of any above or below ground utility lines damaged from any of the Contractor's operation during the period of the contract. The Contractor shall comply with all federal, state and local governmental rules, regulations, laws and ordinances governing any work done under this section.

3.4.4 The Contractor will notify all utility parties affected, and endeavor to have all necessary adjustments of the public or private utility fixtures, pipelines, and other appurtenances within or adjacent to the limits of construction, made as soon as practicable.

3.4.5 Water lines, gas lines, wire lines, service connections, water and gas meter boxes, water and gas valve boxes, light standards, cableways, signals, and all other utility appurtenances within the limits of the proposed construction that are to be relocated or adjusted are to be moved by the owners at their expense, unless otherwise provided in the contract.

3.4.6 It is understood and agreed that the Contractor has considered in the bid all of the permanent and temporary utility appurtenances in their present or relocated positions as shown on the plans and that no additional compensation will be allowed for any delays, inconvenience, or damage sustained due to any interference from the said utility appurtenances or the operation of moving them.

NOTE: The technical specifications will indicate various utility items, some of which are to be relocated or adjusted by the utility owner and others that are to be relocated or adjusted by the Contractor.

3.5 Cooperation between Contractors

The Contractor shall coordinate his/her operations with those of other contractors. Cooperation will be required in the arrangement for the storage of materials and in the detailed execution of the work. The Contractor, including his/her subcontractors, shall keep informed of the progress and the detail work of other contractors and shall notify the Owner's designated representative immediately of lack of progress or defective workmanship and/or materials on the part of other contractors. Failure of the Contractor to keep informed of the work progressing on the site and failure to give notice of lack of progress or defective workmanship by others shall be construed as acceptance by him/her of the status of the work as being satisfactory for proper coordination with his/her own work.

3.6 Inspection

3.6.1 The authorized representative and agents of the City, State or Federal agencies, if applicable, shall be permitted to inspect all work, materials, payrolls, records of personnel, invoices of materials and other relevant data and records.

3.6.2 Additionally, authorized representatives and agents of the City, State or Federal agencies, if applicable, shall be permitted to interview any personnel performing work on behalf of or in relation to the project, including but not limited to, workers on the job site.

3.7 Acceptance of the Work

3.7.1 **Partial Acceptance** – If at any time during the prosecution of the project, the Contractor substantially completes a unit or distinct portion of the project, such as a structure, and intersection or a section of road or pavement, the Contractor may request the City Engineer to make a final inspection of the unit or portion of the project. If the City Engineer finds upon inspection that the unit or portion of the project has been satisfactorily completed in compliance with the contract, he may accept that unit or portion of the project as being completed provided that the Contractor shall remain responsible for completion of any Remaining Work of such unit or portion of the project. Units or portions of the project eligible for the partial acceptance allowed in this paragraph shall be identified specifically in the contract documents as eligible for partial acceptance. Such partial acceptance shall in no way void or alter any of the terms of the Contract.

3.7.2 **Final Acceptance** – Upon due notice from the Contractor of completion of the entire project, the City Engineer shall make an inspection. If all construction provided for and contemplated by the contract is found to be completed to the City Engineer's satisfaction then that inspection shall constitute the final inspection and the City Engineer shall notify the contractor in writing of final acceptance effective as of the date of the final inspection.

3.7.3 **Remaining Work after Substantial Completion**. If the City Engineer determines that the work required by the Contract is Substantially Complete during an inspection conducted pursuant to Sections 3.7.1 or 3.7.2, the Contractor shall be notified of that determination and the City Engineer shall determine if there is Remaining Work. A list of Remaining Work shall be issued only by the City Engineer and only after the City Engineer has certified Substantial Completion. The City Engineer shall give the Contractor the necessary instructions for correction or completion of the Remaining Work, and the Contractor shall immediately comply with and execute such instructions within the Contract Time. Upon completion of the Remaining Work, another inspection shall be made that shall constitute the final inspection, provided the Remaining Work has been completed to the satisfaction of the City Engineer. If the remaining work has been completed to the satisfaction of the City Engineer, the City Engineer shall make the final acceptance and notify the Contractor in writing of this acceptance as of the date of final inspection.

3.7.3.1. **Default for failure to Complete Remaining Work** In the event the Contract Time expires before the Remaining Work is completed to the satisfaction of the City Engineer, the Owner may provide notice to the Contractor that the Remaining Work shall be completed by Contractor to the satisfaction of the City Engineer within ten consecutive calendar days from the date of such notice. The failure of the Contractor to satisfactorily

complete the Remaining Work within the ten days shall entitle to Owner to declare Contractor in default and thereafter terminate the Contract. The ten-day notice provided under this paragraph shall not be construed as adding any time to the Contract Time and is a time period solely for the purposes of providing notice of default.

3.7.4 **Application for Final Payment**. After the Contractor has completed all Remaining Work to the satisfaction of the City Engineer and delivered all maintenance and operating instructions, schedules, guarantees, warranties, bonds, certificates of inspection, marked-up record documents and other documents as required by the Contract, and after the City Engineer has indicated that the work is acceptable, as provided in Section 3.7, Contractor may make application for final payment following the procedure for progress payments. The final application for payment shall be accompanied by all documentation called for in the Contract, together with complete and legally effective releases or waivers (satisfactory to the Owner) of all liens arising out of or filed in connection with the work on the project. In lieu thereof, as approved by Owner, Contractor may furnish receipts or leases in full from suppliers, subcontractors and laborers along with an affidavit of contractor that the releases and receipts include all labor, services, material and equipment for which a lien could be filed and that all payrolls material and equipment bills and other indebtedness connected with the work for which Owner or owner's property might in any be responsible, have been paid otherwise satisfied; and consent of the surety, if any to final payment.

3.7.5 **Final Payment and Acceptance**. If the City Engineer determines that the work has been completed and the Contractor's other obligations under the Contract have been fulfilled, the City Engineer shall, within ten days after receipt of the final application for payment, indicate in writing the City Engineer's recommendation of payment and present the application to Owner for payment. Thereupon the City Engineer shall prepare a Certificate of Final Completion. Otherwise, City Engineer shall return the application to Contractor indicating in writing the reasons for refusing to recommend final payment. Contractor shall make the corrections identified in the City Engineer's refusal to recommend final payment. Thirty days after presentation to Owner of the application and accompanying documentation, with the City Engineer's recommendation and notice of acceptability of the work, the amount recommended by Engineer shall become due and payable by Owner to Contractor.

4.0 CONTROL OF MATERIALS

4.1 Source of Supply and Quality Requirement

4.1.1 The materials used on the work shall meet all quality requirements of the contract. In order to expedite the inspection and testing of material, the Contractor shall notify the Owner's designated representative of his proposed sources of materials prior to delivery.

4.1.2 At the option of the Owner's designated representative, materials may be approved at the source of supply before delivery is started. If it is found

after trial that sources of supply for previously approved materials do not produce specified products, the Contractor shall furnish materials from other sources.

4.2 Contractor's Title of Materials

No materials or supplies for the work shall be purchased by the Contractor or by any subcontractor subject to any chattel mortgage or under a conditional sale contract or other agreement by which an interest is retained by the seller. The Contractor warrants that he/she has good title to all materials and supplies used by him/her in the work, free from all liens, claims or encumbrances. **PROVIDED, HOWEVER, NOTHING IN THIS PARAGRAPH SHALL PREVENT THE CITY FROM EXERCISING ALL LIEN RIGHTS THE CITY MAY HAVE IN GOODS PURCHASED BY THE CONTRACTOR WHICH ARE IDENTIFIED TO THE CONTRACT.**

4.3 "Or Equal" Clause

Whenever a material, article or piece of equipment is identified on the plans or in the specification by reference to manufacturer's or vendor's name, trade names, catalog numbers, etc., it is intended merely to establish a standard; and any material, article or equipment of other manufacturers and vendors which will perform adequately the duties imposed by the general design will be considered equally acceptable provided the material, article or equipment so proposed is, in the opinion of the Owner or Owner's designated representative, of equal substance and function. It shall not be purchased or installed by the Contractor without the Owner or Owner's designated representative's written approval.

4.4 Inspection and Testing of Materials

4.4.1 All materials and equipment used in the construction of the project shall be subject to adequate inspection and testing in accordance with accepted standards as designated by the Owner or Owner's designated representative. The Owner or Owner's designated representative shall have the right at all reasonable times to observe and test the work.

4.4.2 Contractor shall make necessary arrangement and provide proper facilities and access for such observation and testing at any location wherever work is in preparation or progress, including but not limited to, access to the project site, shops or yards where materials may be prepared or stored, and the Contractor shall provide space at the project site for safe storage and proper curing of test specimens.

4.4.3 Contractor shall ascertain the scope of any observation which may be contemplated by Owner or Owner's designated representative and shall give at least twenty-four (24) hours advance notice to the project inspector of any required laboratory work, and as to the time each part of the work will be ready for such observation.

4.4.4 Owner or Owner's designated representative may reject any work found to be defective or not in accordance with the contract documents, regardless of the stage of its completion or the time or place of discovery of such

errors, and regardless of whether Owner's designated representative has previously accepted the work through oversight or otherwise. If any work should be covered without approval or consent of the Owner, it must, if requested by Owner or Owner's designated representative, be uncovered for examination at Contractor's expense.

4.4.5 In the event that any part of the work is being fabricated or manufactured at a location where it is not convenient for Owner or Owner's designated representative to make observations of such work or require testing of said work, then in such event, owner or owner's designated representative may require Contractor to furnish Owner or Owner's designated representative with certificates of inspection, testing or approval made by persons competent to perform such tasks at the location where that part of the work is being manufactured or fabricated. All such tests will be in accordance with the methods prescribed by the American Society for Testing and Materials or such other applicable organization as may be required by law or the contract documents.

4.4.6 All geotechnical and materials testing will be paid for by the Owner. The Contractor will be assessed (billed) for any item(s) tested that did not meet the requirements set forth by the Owner or the Owner's designated representative. Payment for the tests will be made by the Owner and billed directly to the Owner by the laboratory. **The Contractor shall be responsible for payment of overtime charges of any testing laboratory personnel or City Inspectors and any standby time of any testing laboratory personnel. Overtime charges of any testing laboratory personnel or City Inspectors and any standby time of any testing laboratory personnel shall be charged to the Contractor on an as accrued basis, and shall be deducted from the next application for payment made by the Contractor.**

4.4.7 If any work which is required to be inspected, tested or approved, is covered up without written approval or consent of the Owner or Owner's designated representative, it must, if requested by the Owner or Owner's designated representative, be uncovered for observation and testing at the Contractor's expense.

4.4.8 The cost of all such inspections, tests and approvals shall be borne by the Contractor unless otherwise provided herein. Any work which fails to meet the requirements of any such tests, inspections or approval, and any work which does not meet the requirements of the contract documents, shall be considered defective. Such defective work shall be corrected at the Contractor's expense.

4.4.9 Neither observations by the Owner or Owner's designated representative, nor inspections, tests or approval made by Owner, Owner's designated representative or other persons authorized under this agreement to make such inspections, tests or approvals shall relieve the Contractor from his obligation to perform the work in accordance with the requirements of the contract documents.

4.5 Rights In and Use of Materials Found on the Work Site

4.5.1 The Contractor with the approval of the City Engineer may use on the project such stone, gravel, sand, or other material determined suitable by the City Engineer, as may be found in the excavation. The Contractor shall replace at his own expense with other acceptable material all of that portion of the excavation material so removed and used which was needed for use in the embankments, backfills, approaches, or otherwise. The Contractor shall not excavate or remove any material from within the project location which is not within the grading limits without written authorization from the City Engineer.

4.5.2 The term "select material", specified on the drawings and/or technical specifications, generally indicates that original material has to undergo some processing in order to satisfy the requirements. Processing may involve screening or blending with other material, in order to meet gradation requirements.

4.6 Handling Materials

All materials shall be handled in such manner as to preserve their quality and fitness for the work and all precautions and requirements shall be exercised, throughout transportation, loading, storage, process, application and installation.

4.7 Disposal of Materials Outside the Work Site

Unless otherwise specified, the Contractor shall make his own arrangements for disposing of waste and excess materials outside the work site and shall pay all costs incurred thereto. The Contractor shall comply with all federal, state and local governmental rules, regulations, laws and ordinances concerning such disposal of waste and excess materials. The Contractor shall dispose of waste materials on designated routes to/and sites approved by the City Engineer, or his designated representative.

4.8 Unacceptable Materials

All materials not conforming to the requirements of the specifications shall be considered as unacceptable and will be rejected and shall be removed by the Contractor immediately from the site of the work. Rejected material shall not be used until the defects have been corrected and approved by the City Engineer.

5.0 CONTRACTOR'S RESPONSIBILITIES AND LEGAL OBLIGATIONS

5.1 Laws to be observed

5.1.1 The Contractor shall keep fully informed of all federal, state, and local laws, ordinances, and regulations and all orders and decrees of bodies or tribunals having any jurisdiction or authority, which in any manner affect those engaged or employed on the work, or which any way affect the conduct of the work.

5.1.2 HE SHALL AT ALL TIMES OBSERVE AND COMPLY WITH ALL SUCH

LAWS, ORDINANCES, REGULATIONS, ORDERS AND DECREES; AND SHALL PROTECT, DEFEND AND INDEMNIFY THE CITY OF EL PASO AND ITS REPRESENTATIVES AGAINST ANY CLAIM OR LIABILITY ARISING FROM OR BASED ON THE VIOLATION OF ANY SUCH LAW, ORDINANCE, REGULATION, ORDER, OR DECREE, WHETHER BY THE CONTRACTOR OR THE CONTRACTOR'S EMPLOYEES.

5.2 **Provisions Required by Law Deemed Inserted**

Each and every provision of law and clause required by law to be inserted in this contract shall be deemed to be inserted herein and the contract shall be read and enforced as though it were included herein, and if through mistake or otherwise any such provision is not inserted, or is not correctly inserted, then upon the application of either party the contract shall forthwith be physically amended to make such insertion or correction.

5.3 **Patented Devices, Materials and Processes**

5.3.1 **The Contractor shall defend all suits or claims, hold and save the Owner and its officers, agents, servants and employees harmless from liability of any nature or kind, including cost and expenses for, or on account of, any patented or unpatented invention, process, article or appliance manufactured or used in the performance of the contract, including its use by Owner, unless otherwise specifically stipulated in the contract documents.**

5.3.2 License or Royalty Fees - License or royalty fees for the use of a process which is authorized by the Owner for the Project must be reasonable and must be paid to the holder of the patent, or to his/her authorized licensee by the Contractor.

5.3.3. If the Contractor uses any design, device or materials covered by letter, patent or copyright, he/she shall provide for such use by suitable agreement with the holder or owner of such patented or copyrighted design, device or materials. It is mutually agreed and understood that without exception, the contract prices shall include all royalties or costs arising from the use of such design, device or materials in any way involved in the work.

5.3.4 **THE CONTRACTOR AND/OR HIS/HER SURETY SHALL DEFEND ALL SUITS OR CLAIMS AND SHALL INDEMNIFY AND HOLD AND SAVE HARMLESS THE OWNER OF THE PROJECT FROM ANY AND ALL CLAIMS FOR INFRINGEMENT UPON OR VIOLATION OF ANY PATENT, COPYRIGHT, TRADE SECRET OR OTHER PROPRIETARY RIGHT AT ANY TIME DURING THE PROSECUTION OF THE WORK OR AFTER COMPLETION OF THE WORK, AND SHALL PAY ANY JUDGMENT (INCLUDING ALL COURT COSTS, EXPERT FEES, AND ATTORNEYS FEES) RENDERED AGAINST THE OWNER AS A RESULT OF SUCH CLAIMS.**

5.4 Public Convenience and Safety

The Contractor shall at all times so conduct work as to assure the least possible disruption of traffic. The safety and convenience of the general public and the residents along the project and the protection of persons and property shall be provided for by the Contractor as specified under Paragraph 2.6 herein.

5.5 Use of Explosives

5.5.1 When the use of explosives is necessary for the prosecution of the work, the Contractor shall observe all local, state and federal laws in purchasing and handling explosives, including but not limited to the acquiring of all required permits. The Contractor shall take all necessary precaution to protect completed work, neighboring property, water lines or other underground structures. Where there is danger to structures or property from blasting, the charges shall be reduced and the materials shall be covered with suitable timber, steel or rope mats.

5.5.2 The Contractor shall notify all owners of public utility property of his/her intention to use explosives at least eight (8) hours before blasting is done close to such property. Any supervision or direction of use of explosives by the Owner or Owner's designated representative does not in any way reduce the responsibility of the Contractor and/or his/her surety for damages that may be caused by such use.

5.6 Protection of Work and Property

5.6.1 In the event of temporary suspension of work, or during inclement weather, or whenever the Owner or Owner's designated representative shall direct, the Contractor will, and will cause his/her subcontractors, to protect carefully his/her and their work and materials against damage or injury from the weather.

5.6.2 If, in the opinion of the Owner or Owner's designated representative, any work or materials shall have been damaged or injured by reason of failure on the part of the Contractor or any of his/her subcontractors to so protect his work or materials, all such work or materials shall be removed or replaced at the expense of the Contractor.

5.7 Protection of Work and Property - Emergency

5.7.1 The Contractor shall at all times safely guard the Owner's property from injury or loss in connection with this contract. The Contractor shall at all times safely guard and protect his/her own work and that of adjacent property from damage.

5.7.2 In case of an emergency which threatens loss or injury of property and/or safety of life, the Contractor will be allowed to act, without previous instructions from the Owner or Owner's designated representative, in a diligent manner. However, the Contractor shall notify the Owner or Owner's designated representative immediately thereafter. Any claim for

compensation by the Contractor due to such extra work shall be promptly submitted to the Owner or Owner's designated representative for approval.

5.7.3 The safety precautions taken shall be the sole responsibility of the Contractor in his sole discretion as an Independent Contractor.

5.7.4 Inclusion of this paragraph in the Agreement, as well as any notice which may be given by the Owner or the Owner's designated representative concerning omissions under this paragraph as the work progresses, are intended as reminders to the Contractor of his duty and shall not be construed as any assumption of duty to supervise safety precautions by the Contractor or any of his subcontractors.

5.7.5 The amount of reimbursement claimed by the Contractor on account of any emergency action shall be determined in the manner provided in Paragraph 2.5 herein.

5.8 Protection of Work and Property - Monitor Wells

5.8.1. The Contractor shall be vigilant at all times for ground water monitor wells within public rights-of-way or on adjacent property which may belong to the Owner or to other agencies which have installed wells with the Owner's permission. Such wells may or may not be shown on the plans for the project.

5.8.2 The Contractor shall inspect all rights-of-way and property within the limits of the project and shall promptly report to the Owner's representative any monitor wells or devices, caps or other objects that might be monitor wells.

5.8.3 The Contractor may not disturb any monitor well in any way but shall protect them from disturbance or damage and shall schedule and carry out operations to prevent any disturbance of or damage to monitor wells.

5.8.4 Should the Contractor discover a monitor well during construction, it shall immediately be reported to the Owner's representative and shall be protected from any disturbance or from further disturbance.

5.8.5 Should it be necessary to change the elevation of a monitor well head, the Contractor shall so notify the Owner's representative who will make appropriate arrangements with a licensed well driller to adjust the well head. The Contractor shall work closely with the well driller and shall carry out the driller's instructions on behalf of the Owner.

5.9 Mutual Responsibility of Contractor

If, through acts of neglect on the part of the Contractor, any other contractor or any subcontractor shall suffer loss or damage on the work, the Contractor agrees to settle with such other contractor or subcontractor by agreement or arbitration if such other contractor or subcontractor will so settle. If such other contractor or subcontractor shall assert any claim against the Owner on account of any damage alleged to have been sustained, the Owner shall notify the Contractor, who shall indemnify and save

harmless the Owner against any such claim.

5.10 **INDEMNIFICATION**

Contractor or its insurer will INDEMNIFY, DEFEND AND HOLD the City, its officers, agents and employees, HARMLESS FOR AND AGAINST ANY AND ALL CLAIMS, CAUSES OF ACTION, LIABILITY, DAMAGES OR EXPENSE, (INCLUDING BUT NOT LIMITED TO ATTORNEY FEES AND COSTS) FOR ANY DAMAGE TO OR LOSS OF ANY PROPERTY, OR ANY ILLNESS, INJURY, PHYSICAL OR MENTAL IMPAIRMENT, LOSS OF SERVICES, OR DEATH TO ANY PERSON ARISING OUT OF OR RELATED TO THIS AGREEMENT, <u>even where such damage, injury, loss, illness, physical or mental impairment, loss of services, or death results from or involves NEGLIGENCE or allegations of negligence on the part OF THE CITY, its officers, agents, or employees</u>. Without modifying the conditions of preserving, asserting or enforcing any legal liability against the City as required by the City Charter or any law, the City will promptly forward to Contractor every demand, notice, summons or other process received by the City in any claim or legal proceeding contemplated herein. Contractor will 1) investigate or cause the investigation of accidents or occurrences involving such injuries or damages; 2) negotiate or cause to be negotiated the claim as the Contractor may deem expedient; and 3) defend or cause to be defended on behalf of the City all suits for damages even if groundless, false or fraudulent, brought because of such injuries or damages. Contractor will pay all judgments finally establishing liability of the City in actions defended by Contractor pursuant to this section along with all attorneys' fees and costs incurred by the City including interest accruing to the date of payment by Contractor, and premiums on any appeal bonds. The City, at its election will have the right to participate in any such negotiations or legal proceedings to the extent of its interest. The City will not be responsible for any loss of or damage to the Contractor's property from any cause. [Revised 04-15-99].

5.11 **Insurance**

5.11.1 The Contractor shall not commence work under this contract until he/she has obtained all the insurance required under this paragraph and such insurance has been approved by the Owner, nor shall the Contractor allow any subcontractor to commence work on his/her subcontract until the insurance required of the subcontractor has been so obtained and approved.

5.11.2 **General Insurance Requirements**.

The following requirements apply to all insurance required in this section 5.11 unless specifically stated otherwise.

5.11.2.1 **Texas Insurance Requirement:** The insurance required in this section 5.11 shall be written by an accredited insurance company under the supervision of the Board of Insurance Commissioners of the State of Texas.

5.11.2.2 **Evidence of Compliance:** Evidence of compliance with these insurance requirements shall be considered as having been met when copy of the insurance policy or a certificate of insurance has been filed with and approved by the Owner which shall be prior to the execution of the construction contract. The Contractor shall furnish Owner with documentation from the insurer showing the type, amount, class of operations covered, effective dates and date of expiration of policies.

5.11.2.3 **Additional Insured and Notice Endorsements Required:** The insurance policies shall include an endorsement that the Owner is named as an additional insured [except for worker's compensation insurance] to the full amount of the policy limits and that the Owner shall be notified at least thirty days in advance in the event the policy or policies are canceled and ten days in advance for non-payment of policy premiums. The endorsement shall contain substantially the following statement: "The insurance included within this policy shall not be cancelled or materially altered except after thirty (30) consecutive calendar days [ten (10) consecutive calendar days for non-payment of policy premiums written notice by certified mail or intent to cancel or materially alter said insurance has been provided to owner [additional insured]." Endorsements stating that the insurer will "endeavor to notify" and/or "failure to notify shall impose no obligation or liability upon the (insurance) company" are not acceptable. Failure by Contractor to provide proof of insurance coverage for itself or its subcontractors shall delay release of pending payments. The required endorsement shall be provided to the Owner in addition to the certificates of insurance prior to the execution of the construction contract.

5.11.2.4 **Maintaining Insurance:** The contractor shall maintain said insurance with a solvent insurance company authorized to do business in Texas. The policy shall provide that the insurer will defend against all claims and lawsuits which arise and will pay any final judgment of a court of competent jurisdiction against the City, its officers, agents, servants or employees and Contractor to keep the policies of insurance in full force and effect throughout the term of the permit shall be grounds for termination of the construction contract.

5.11.2.5 **Time Insurance Policies Shall Remain in Effect:** All insurance policies required herein shall remain in effect until final payment and at all times thereafter when Contractor is correcting, removing or replacing defective work in accordance with paragraph 5.16 of these General Conditions.

5.11.3 Commercial General Liability, Property Damage Liability and Vehicle Liability Insurance.

The Contractor shall procure and shall maintain during the life of this contract such

Commercial General Liability, Property Damage Liability and Vehicle Liability Insurance as shall protect him and any subcontractor performing work covered by the Contractor from claims for damages for personal injury, including accidental death, as well as from claims for property damages, which may arise from operations under this contract, whether such operations be by himself or by any subcontractor or by anyone directly or indirectly employed by either of them, and the minimum limits of liability and coverages shall be as follows:

5.11.3.1 Commercial General

Liability Bodily Injury	$1,000,000.00 each person
Property Damage	$1,000,000.00 each occurrence
General Aggregate	$2,000,000.00

5.11.3.2 Vehicle Liability

Combined Single Limit	$1,000,000.00

5.11.4 **Subcontractor's Commercial General Liability and Property Damage Insurance and Vehicle Liability Insurance**.

The Contractor shall either,

5.11.4.1 Require each of his/her subcontractors to procure and to maintain during the life of his/her subcontract, Subcontractor's Commercial General Liability and Property Damage Insurance and Vehicle Liability Insurance in the amounts specified above; or

5.11.4.2 Insure the activities on his/her policy, specified in subparagraph 5.11.2 hereof.

5.11.5 **Scope of Insurance and Special Hazards**.

The insurance required under Subparagraphs 5.11.2 and 5.11.4 hereof shall provide adequate protection for the Contractor and his/her subcontractors, respectively, against damage claims which may arise from operations under this contract whether such operations are by the insured or by anyone directly or indirectly employed by him/her, and also against any of the special hazards which may be encountered herein;

HAZARD: N / A AMOUNT: N / A

5.11.6 **Builder's Risk Insurance (Fire and Extended Coverage)**.

5.11.6.1 This insurance shall be required only for building projects, as opposed to street, bridge and drainage projects.

5.11.6.2 Until the project is completed and accepted by the Owner, the Contractor is required to maintain Builder's Risk Insurance (fire and extended coverage) on a one hundred percent (100%) completed value basis on the insurable portion of the project for the benefit of the Owner, the Contractor and subcontractor, as their interests may appear. The Contractor shall not

include any costs for Builder's Risk Insurance (fire and extended coverage) premiums during construction unless the Contractor is required to provide such insurance; however, this provision shall not release the Contractor from his/her obligation to complete, according to plans and specifications, the project covered by the contract, and the Contractor and his/her Surety shall be obligated to full performance of the Contractor's undertaking.

5.12 Texas Workers' Compensation Requirements

5.12.1 Definitions:

5.12.1.1 Certificate of coverage ("certificate") -- A copy of a certificate of insurance, a certificate of authority to self-insure issued by the Commission, or a coverage agreement (TWCC-81, TWCC-82, TWCC-83, or TWCC-84), showing statutory workers' compensation insurance coverage for the person's or entity's employees providing services on a project, for the duration of the project.

5.12.1.2 Duration of the project -- includes the time from the beginning of the work on the project until the contractor's/person's work on the project has been completed and accepted by the governmental entity.

5.12.1.3 Persons providing services on the project ("subcontractor") -- includes all persons or entities performing all or part of the services the contractor has undertaken to perform on the project, regardless of whether that person contracted directly with the contractor and regardless of whether that person has employees. This includes, without limitation, independent contractors, subcontractors, leasing companies, motor carriers, owner-operators, employees of any such entity or employees of any entity which furnishes persons to provide services on the project. "Services" include, without limitation, providing, hauling, or delivering equipment or materials, or providing labor, transportation, or other service related to a project. "Services" does not include activities unrelated to the project such as food/beverage vendors, office supply deliveries, and delivery of portable toilets.

5.12.2 The Contractor shall provide coverage, based on proper reporting of classification codes and payroll amounts and filing of any coverage agreements, which meets the statutory requirements of Texas Labor Code, Section 401.011(44) for all employees of the contractor providing services on the project, for the duration of the project.

5.12.2.1 Special Endorsement: The workers compensation policy provided by the contractor shall be endorsed to provide that the insurer waives any right of subrogation it may acquire against the owner, the Architect/Engineer of record, the Construction Manager, where applicable, by reason of any payment made in

account of injury, including death resulting there from, sustained by any employee of the insured. The contractor must provide the endorsement prior to execution of the contract.

5.12.3 The Contractor must provide a certificate of coverage to the governmental entity prior to being awarded the contract.

5.12.4 If the coverage period shown on the contractor's current certificate of coverage ends during the duration of the project, the contractor must, prior to the end of the coverage period, file a new certificate of coverage with the governmental entity showing that coverage has been extended.

5.12.5 The Contractor shall obtain from each person providing services on a project, and provide to the governmental entity:

5.12.5.1 A Certificate of coverage, prior to that person beginning work on the project, so the governmental entity will have on file certificates of coverage showing coverage for all persons providing services on the project; and

5.12.5.2 No later than seven days after receipt by the contractor, a new certificate of coverage showing extension of coverage, if the coverage period shown on the current certificate of coverage ends during the duration of the project.

5.12.6 The Contractor shall retain all required certificates of coverage for the duration of the project and for one year thereafter.

5.12.7 The Contractor shall notify the governmental entity in writing by certified mail or personal delivery, within 30 days after the contractor knew or should have known, of any change that materially affects the provision of coverage of any person providing services on the project.

5.12.8 The Contractor shall post on each project site a notice, informing all persons providing services on the project that they are required to be covered, and stating how a person may verify coverage and report failure of coverage.

5.12.9 This notice does not satisfy other posting requirements imposed by the Act or other Commission rules. This notice must be printed with a title in at least 30 point bold type and text in at least 19 point normal type, and shall be in both English and Spanish and any other language common to the worker population. The text for the notices shall be the following text provided by the Commission on the sample notice, without any additional words or changes:

REQUIRED WORKERS' COMPENSATION COVERAGE

"The law requires that each person working on this site or providing services related to this construction project must be covered by workers' compensation insurance. This includes persons providing, hauling, or

delivering equipment or materials, or providing labor or transportation or other service related to the project, regardless of the identity of their employer or status as an employee."
"Call the Texas Workers' Compensation Commission at (800) 372-7713 or (512) 804-4000 to receive information on the legal requirement for coverage, to verify whether your employer has provided the required coverage, or to report an employer's failure to provide coverage."; and

5.12.10 The Contractor shall contractually require each person with whom it contracts to provide services on a project, to:

5.12.10.1 Provide coverage, based on proper reporting of classification codes and payroll amounts and filing of any coverage agreements, which meets the statutory requirements of Texas Labor Code, Section 401.011 (44) for all of its employees providing services on the project, for the duration of the project;

5.12.10.2 Provide to the contractor, prior to that person beginning work on the project, a certificate of coverage showing that coverage is being provided for all employees of the person providing services on the project, for the duration of the project;

5.12.10.3 Include in all contracts to provide services on the project the language in Subsection 5.12.13.3 herein;

5.12.10.4 Provide the contractor, prior to the end of the coverage period, a new certificate of coverage showing extension of coverage, if the coverage period shown on the current certificate of coverage ends during the duration of the project:

5.12.10.5 Obtain from each other person with whom it contracts, and provide to the contractor:

5.12.10.5.1 A certificate of coverage, prior to the other person beginning work on the project; and

5.12.10.5.2 A new certificate of coverage showing extension of coverage, prior to the end of the coverage period, if the coverage period shown on the current certificate of coverage ends during the duration of the project;

5.12.10.6 Retain all required certificates of coverage on file for the duration of the project and for one year thereafter;

5.12.10.7 Notify the governmental entity in writing by certified mail or personal delivery, within 10 days after the person knew or should have known, of any change that materially affects the provision of coverage of any person providing services on the project; and

5.12.10.8 Contractually require each person with whom it contracts, to perform as required by Paragraphs 5.12.10.1 through 5.12.10.8,

with the certificates of coverage to be provided to the person for whom they are providing services.

5.12.11 By signing this contract or providing or causing to be provided a certificate of coverage, the contractor is representing to the governmental entity that all employees of the contractor who will provide services on the project will be covered by workers' compensation coverage for the duration of the project, that the coverage will be based on proper reporting of classification codes and payroll amounts, and that all coverage agreements will be filed with the appropriate insurance carrier or, in the case of a self-insured, with the Commission's Division of Self-Insurance Regulation. Providing false or misleading information may subject the contractor to administrative penalties, criminal penalties, civil penalties, or other civil actions.

5.12.12 The contractor's failure to comply with any of these provisions is a breach of contract by the contractor which entitles the governmental entity to declare the contract void if the contractor does not remedy the breach within ten days after receipt of notice of breach from the governmental entity.

5.12.13 A person providing services on a project, other than a contractor, shall:

5.12.13.1 Provide coverage for its employees providing services on a project, for the duration of the project based on proper reporting of classification codes and payroll amounts and filing of any coverage agreements;

5.12.13.2 Provide a certificate of coverage as required by its contract to provide services on the project, prior to beginning work on the project;

5.12.13.3 Have the following language in its contract to provide services on the project:

"By signing this contract or providing or causing to be provided a certificate of coverage, the person signing this contract is representing to the governmental entity that all employees of the person signing this contract who will provide services on the project will be covered by workers' compensation coverage for the duration of the project, that the coverage will be based on proper reporting of classification codes and payroll amounts, and that all coverage agreements will be filed with the appropriate insurance carrier or in the case of a self-insured, with the Commission's Division of Self-Insurance Regulation. Providing false or misleading information may subject the contractor to administrative penalties, criminal penalties, civil penalties, or other civil actions."

5.12.14 Provide the person for whom it is providing services on the project, prior to the end of the coverage period shown on its current certificate of coverage, a new certificate showing extension of coverage, if the coverage period shown on the certificate of

coverage ends during the duration of the project;

5.12.15 Obtain from each person providing services on a project under contract to it, and provide as required by its contract:

5.12.15.1 A certificate of coverage, prior to the other person beginning work on the project; and

5.12.15.2 Prior to the end of the coverage period, a new certificate of coverage showing extension of the coverage period, if the coverage period shown on the current certificate of coverage ends during the duration of the project;

5.12.16 Retain all required certificates of coverage on file for the duration of the project and for one year thereafter;

5.12.17 Notify the governmental entity in writing by certified mail or personal delivery, of any change that materially affects the provision of coverage of any person providing services on the project and send the notice within 30 days after the person knew or should have known of the change; and

5.12.18 Contractually require each other person with whom it contracts to:

5.12.18.1 Provide coverage based on proper reporting of classification codes and payroll amounts and filing of any coverage agreements for all of its employees providing services on the project, for the duration of the project;

5.12.18.2 Provide a certificate of coverage to it prior to that other person beginning work on the project;

5.12.18.3 Include in all contracts to provide services on the project the language in Subsection 5.12.13.3 herein.

5.12.18.4 Provide, prior to the end of the coverage period, a new certificate of coverage showing extension of the coverage period, if the coverage period shown on the current certificate of coverage ends during the duration of the project;

5.12.18.5 Obtain from each other person under contract to it to provide services on the project, and provide as required by its contract:

5.12.18.5.1 A certificate of coverage, prior to the other person beginning work on the project; and

5.12.18.5.2 Prior to the end of the coverage period, a new certificate of coverage showing extension of the coverage period, if the coverage period shown on the current certificate of coverage ends during the duration of the contract;

5.12.18.6 Retain all required certificates of coverage on file for the duration of the project and for one year thereafter;

5.12.18.7 Notify the governmental entity in writing by certified mail or personal delivery, within 30 days after the person knew or should have known, of any change that materially affects the provision of coverage of any person providing services on the project; and

5.12.18.8 Contractually require each person with whom it contracts, to perform as required by Paragraphs 5.12.1 through 5.12.9, with the certificate of coverage to be provided to the person for whom they are providing services.

5.13 **Contract Security.** In accordance with Chapter 2253, Texas Government Code, the City of El Paso requires the following for all public works contracts:

5.13.1 The Contractor shall furnish a **performance bond** in an amount at least equal to one hundred percent (100%) of the contract price as security for the faithful performance of this contract and such performance bonds shall be issued for a duration sufficient to cover all warranty periods required by the construction contract.

5.13.2 A **payment bond** in an amount not less than one hundred percent (100%) of the contract price, or in a penal sum not less than that prescribed by the state, territorial or local law, as security for the payment of all persons performing labor on the project under this contract and furnishing materials in connection with this contract.

5.13.2.1 In accordance with Section 3503.004 of the TEXAS INSURANCE CODE, if a Performance or Payment bond is in an amount of excess of ten percent (10%) of the surety's capital and surplus, the City of El Paso will require, as a condition to accepting the bond(s), a written certification from the surety that the surety has reinsured the portion of the risk that exceeds ten percent (10%) of the surety's capital and surplus with one or more reinsurers who are duly authorized, accredited or trusteed to do business in the State of Texas. If any portion of the surety's obligation is reinsured, the amount reinsured may not exceed 10% of the reinsurer's capital and surplus.

5.13.2.2 The performance bond and the payment bond shall be in a form approved by the Owner. A copy of the payment bond provided for the construction project shall clearly and prominently display on the bond or on an attachment to the bond:

(a) The name, mailing address, physical address and telephone number, including the area code, of the surety company to which any notice of claim should be sent: or

(b) The toll-free telephone number maintained by the Texas Department of Insurance under Subchapter B, Chapter 521.051 Insurance Code, and a statement that the address of the surety company to which any notice of claim should be sent may be obtained from the Texas Department of Insurance by calling the

toll-free telephone number.

5.13.2.2.1 The surety company providing the payment bond shall designate an agent resident who resides within the County of El Paso and to whom any requisite notices may be delivered and with whom service of process may be rendered in matters arising out of suretyship.

5.13.2.3 Should the surety exercise its right to take over and perform the contract in accordance with Section 6.9 of the Construction Contract General Conditions, the surety shall submit or require the contractor to submit, a payment bond and performance bond that satisfies the requirements set forth in paragraph 5.13.1 and 5.13.2 above.

5.13.2.4 A bond provided pursuant to these General Conditions may be executed only by a surety company that is authorized to write surety bonds in Texas. If the amount of the bond exceeds $100,000, the surety company must also:

(a) hold a certificate of authority from the United States secretary of the treasury to qualify as a surety on obligations permitted or required under federal law; or

(b) have obtained reinsurance for any liability in excess of $100,000 from a reinsurer that:

(1) is an authorized reinsurer in this state; and

(2) holds a certificate of authority from the United States secretary of the treasury to qualify as a surety or reinsurer on obligations permitted or required under federal law.

To determine whether the surety on the bond or the reinsurer holds a certificate of authority from the United States secretary of the treasury, a party may conclusively rely on the list published in the Federal Register by the United States Department of Treasury, covering the date on which the bond was executed, of the companies holding certificates of authority as acceptable sureties on federal bonds and as acceptable reinsuring companies.

5.14 Additional or Substitute Bond

5.14.1 If at any time the Owner, for justifiable cause, shall be or become dissatisfied with any Surety or Sureties upon the Performance or Payment Bonds, the Contractor shall within five (5) consecutive work days after notice from the Owner to do so, substitute an acceptable bond (or bonds) in such form and sum and signed by such other Surety or Sureties as may be satisfactory to the Owner. The premiums on such bond (or bonds) shall be paid by the Contractor at no additional costs to the Owner.

5.14.2 No further payments to the contractor shall be deemed due nor shall be made until the new Surety or Sureties shall have furnished such an acceptable bond to the Owner.

5.15 Contractor's Obligations

5.15.1 The Contractor shall, and will in a good workmanlike manner, do and perform all work, and provide and pay for all materials, labor, tools, equipment, machinery, water, electricity, transportation, superintendence, temporary construction and all services and facilities necessary to complete and deliver the work within the specified time, in accordance with the provisions of the contract documents, plans and drawings, and directions of the Owner's designated representative.

5.15.2 If required, the Contractor shall furnish, erect, maintain and remove temporary works or construction plant. The Contractor shall observe, comply with and be subject to all terms, conditions, requirements and limitations of the contract and specifications, and shall do, carry on and complete the entire work to the satisfaction of the Owner's designated representative and the Owner. It is expressly required that all work performed by the Contractor shall comply with any and all applicable City Building Codes.

5.15.3 The Contractor upon completion of the project shall provide to the Owner one complete set of original drawings ("As Built Plans") reflecting all changes incorporated into the project.

5.16 Correction of Work

5.16.1 All work, all materials, whether incorporated in the work or not, all processes of manufacture and all methods of construction shall be at all times and places subject to the inspection of the Owner or Owner's designated representative, who shall be the final judge of the quality and suitability of the work, materials, processes of manufacture and methods of construction for the purpose for which they are used. Should they fail to meet the Owner or Owner's designated representative's approval, they shall be forthwith reconstructed, made good, replaced and/or corrected, as the case may be, by the Contractor at his/her own expense.

5.16.2 Rejected material shall immediately be removed from the site. If in the opinion of the Owner or Owner's designated representative, it is undesirable to replace any defective or damaged materials or to construct, reconstruct, or correct any portion of the work injured or not performed in accordance with the contract documents, the compensation to be paid to the Contractor hereunder shall be reduced by such amount as in the judgment of the Owner or Owner's designated representative shall be equitable.

5.17 Warranty of Construction

5.17.1 The Contractor warrants to the Owner that materials and equipment furnished under the contract will be of good quality and new unless

otherwise required or permitted by the contract documents, that the work will be free from defects not inherent in the quality required or permitted, and that the work will conform to the requirements of the contract documents. Work not conforming to these requirements, including substitutions not properly approved and authorized, may be considered defective.

5.17.2 Neither the final certificate of payment nor any provisions in the contract documents, nor partial or entire occupancy of the premises by the Owner shall constitute an acceptance of work not done in accordance with the contract documents or relieve the Contractor of liability in respect to any express warranties or responsibility for faulty materials or workmanship. The Contractor shall remedy any defects in the work and pay for any damage to other work resulting there from which shall appear within a period of one (1) year from the date of final acceptance of the work unless a longer period is specified, The Owner will give notice of observed defects with reasonable promptness.

5.18 Use and Occupancy Prior to Acceptance by Owner

The Contractor agrees to the use and occupancy of a portion or units of the project by the Owner prior to completion and final acceptance. In doing so, the Owner will endeavor not to interfere with any work being done by the Contractor or any subcontractors employed by him. Such use and occupancy by the Owner shall not relieve the Contractor of any requirements under this Contract, including but not limited to the final cleanup of punch list items.

5.19 Contractor's Responsibilities for Utility Property and Services

5.19.1 **It is the responsibility of the contractor disturbing the earth's surface to notify the operators of the underground facilities that there is planned work in the area near those lines. Before digging, blasting, drilling, grading, pipe positioning and moving earth, it is imperative that the Contractor call the Texas Excavation Safety System (TESS) at 1-800-344-8377. However, the Contractor's responsibilities are not fulfilled solely by placement of a phone call to the notification center about intended excavation; this is merely the first step in the location process. The directions and procedures outlined in the following paragraphs must also be adhered to.**

5.19.2 **Prior to commencing work, the Contractor shall make arrangements to protect the properties of water, sewer, gas, cable, telephone, and power companies, or other property from damage that could result in considerable expense, loss, or inconvenience.**

5.19.3 **After the markings have been made, excavators are expected to maintain a minimum clearance of two feet (24 inches) plus the width of the line between marked and unexposed facilities and the cutting edge or point of any power-operated excavating or earth-moving equipment. IF EXCAVATION IS REQUIRED WITHIN THIS DISTANCE HORIZONTALLY OF ANY MARKED UTILITY, THE EXCAVATION**

SHOULD BE PERFORMED VERY CAREFULLY WITH HAND TOOLS AND WITHOUT DAMAGE.

5.19.4 **The depth of underground facilities varies due to changing soil conditions and other variables. It is the responsibility of the excavator to determine the facility's exact depth and location by safe and acceptable means within the marked facility area.**

5.19.5 **When excavation operations approach the estimated location of underground installations, the exact location of the installations shall be determined by safe and acceptable means.**

5.19.6 **While the excavation is open, underground installations shall be protected, supported or removed as necessary to safeguard employees.**

5.19.7 **The Contractor shall cooperate with the utility owners in the removal and rearrangement of any underground or overhead utility lines or facilities to minimize interruption to service and duplication of work by the utility owners.**

5.19.8 **In the event utility services are interrupted as a result of accidental breakage, the Contractor shall promptly notify the proper authorities and cooperate with them until service has been restored. Work undertaken around fire hydrants shall not commence until provisions for continued service have been made and approved by the local fire authority.**

5.20 Obligation for Temporary Electrical Power

The Contractor shall be responsible for obtaining temporary electrical power to the Project site and providing the temporary distribution system necessary to accomplish the construction of the Project. The Contractor shall be responsible for all coordination necessary with the El Paso Electric Company to secure and maintain temporary electrical power to the Project site and to ensure that any power necessary for construction is available at the time needed by the Contractor. This responsibility includes but is not limited to, the locating of and accessing to the nearest existing power source, or in the alternate, the providing of generators as required for construction. All charges for temporary electrical power shall be borne by the Contractor, including but not limited to meter deposits for temporary power, connect/disconnect charges, permit charges, service terminal, (meter loops, meter sockets, service entrance switch) and all costs of electrical energy and meter charges.

5.21 Environmental Protection

5.21.1 The Contractor shall comply with all federal, state, and local laws and regulations controlling pollution of the environment. Necessary precautions shall be taken to prevent pollution of land, soils, streams, lakes, ponds, and reservoirs with fuels, oils, bitumens, chemicals, or other harmful and hazardous materials and to prevent pollution of the atmosphere from particulate and gaseous matter.

5.21.2 Fording of live streams shall not be permitted unless the Contractor's plan for such operation meets the approval of the City Engineer and results in minimum siltation to the stream. Unless approved by the City Engineer, mechanized equipment shall not be operated in live streams except as required to construct channel changes and temporary or permanent structures that are part of the contract.

5.21.3 When work areas or pits are located in or adjacent to live streams, such areas shall be separated from the main stream by a dike or barrier to keep sediment from entering a flowing stream. Care shall be taken during the construction and removal of such barriers to minimize siltation of the stream.

5.21.4 Water from aggregate washing or other operations containing sediment shall be treated by filtration, settling basins, or other means sufficient to reduce the sediment content to not more than that of the stream or lake into which it is discharged.

5.22 Texas Pollutant Discharge Elimination System (TPDES) Requirements

5.22.1 TPDES Construction General Permit, Permit No. TXR150000 was approved, signed and became effective on **March 5, 2013**.

5.22.2 The Texas Pollutant Discharge Elimination System (TPDES) program implements the federal National Pollutant Discharge Elimination System (NPDES) program in the state of Texas. The EPA Region 6 (located in Dallas) has administered the Phase I storm water general permit for construction activities disturbing 5 or more acres within the state of Texas until the TPDES permit has been issued. On **March 5, 2013** the TCEQ became the permitting authority for these discharges. This general permit also covers storm water discharges from Phase II construction activities that disturb at least 1 acre and less than 5 acres. Further information may be obtained from the Executive Director's Response to Comments and the TXR 150000 Fact Sheet.

5.22.3 Large Construction Activity –Construction activities including clearing, grading and excavation that result in land disturbance of equal to or greater than five (5) acres of land. Large construction activity also includes the disturbance of less than five (5) acres of total land area that is part of a larger common plan of development or sale if the larger common plan will ultimately disturb equal to or greater than five (5) acres of land. Large construction activity does not include routine maintenance that is performed to maintain the original line and grade, hydraulic capacity, and original purpose of a ditch, channel, or other similar storm water conveyance. Large construction activity does not include the routine grading of existing dirt roads, asphalt overlays of existing roads, the routine clearing of existing right of ways, and similar maintenance activities. Construction projects that started after the issuance of the TPDES general permit and that will disturb 5 or more acres must be authorized under TPDES General Permit issued on **March 5, 2013** prior to commencement or construction activities.

5.22.3.1 Obtain a copy of the TCEQ CGP (TPDES Permit No. TXR150000).

5.22.3.2 Develop and implement a storm water pollution prevention plan (SWP3) and submit a copy of SWP3 as per **15.20.110 Storm Water Discharge from Construction Activities** to the City of El Paso Development Services Department for review and approval.

5.22.3.3 Complete and submit the (NOI) Notice of Intent form to the TCEQ State agency prior to the commencement of construction. Submit a copy of (NOI) form and the City of El Paso Storm Water Pollution Prevention Plan (SWP3) and application form to the City of El Paso Development Services Department along with the fee.

5.22.3.4 Submit a Notice of Termination (NOT) once the site has reached final stabilization. NOTE: This is a condition precedent to obtaining Final Payment under these contract documents. Submit a copy of the State NOT (Notice of Termination) form to the Development Services Department.

5.22.4 Small Construction activity –Construction activities including clearing, grading, and excavating that result in land disturbance of equal to or greater than one (1) acre to less than five (5) acres of land. Small construction activity also includes the disturbance of less than one (1) acre of total land area that is part of a larger common plan of development of sale if the larger common plan will ultimately disturb equal to or greater than (1) and less than (5) acres of land. Small construction activity does not include routine maintenance that is performed to maintain the original line and grade, hydraulic capacity, and original purpose of a ditch, channel, or other similar storm water conveyance. Small construction activity does not include the routine grading of existing dirt roads, asphalt overlays of existing roads, the routine clearing of existing right- of- ways, and similar maintenance activities.

5.22.4.1 Obtain a copy of TECQ CGP (TPDES Permit No. TXR 150000).

5.22.4.2 If construction site does not qualify for the time frame required for Attachment 1 of the General Permit for small construction sites, then, the operator needs to develop and implement a storm water pollution prevention plan (SWP3) and submit the SWP3 to Development Services for review and approval.

5.22.4.3 Complete and post the Construction Site Notice Attachment I or Attachment II of the General Permit. Submit a copy to the City of El Paso Development Services Department.

5.22.4.4 Before construction begins:

5.22.4.4.1 If the site qualifies, complete and submit a Low Rainfall Erosivity Waiver Form to TCEQ. Submit a copy to City of El Paso Development Services Department.

5.22.4.4.2 Complete and post the Construction Site Notice Attachment I or Attachment II of the General Permit. Submit a copy to the City of El Paso Development Services Department for review.

5.22.5 Small sites. For construction projects that will disturb less than one (1) acre and overall common plan is less than one (1) acre, no permit is required. TCEQ or the City of El Paso can also designate construction activities disturbing less than one acre for inclusion in the construction General Permit based on the potential for contributing to a violation of a water quality standard or for significant contribution of pollutants to waters of the United States.

5.22.5.1 NOTE: If the construction activity develops into a larger project, then permit coverage may be required at that time based on the total number of acres that will be disturbed: 5 or More Acres or 1 to Less Than 5 Acres.

5.23 Prevailing Wage Rates and Wage Rate Penalty

5.23.1 The Contractor and any subcontractor under him shall not pay less than the general prevailing wage rates contained herein, to all laborers, workmen and mechanics employed by them in the execution of this contract. When multiple wage rates are used (e.g. Federal wage rates and City wage rates) featuring similar job classifications, the higher wage within the relevant construction type shall be paid.

5.23.2 Pursuant to Chapter 2258, Texas Government Code, the Contractor shall forfeit as a penalty to the City of El Paso Sixty Dollars ($60.00) for each laborer, workman or mechanic employed, for each calendar day, or portion thereof such laborer, workman or mechanic is paid less than the said stipulated rates for any work done under said contract, by him, or by any subcontractor under him.

5.23.3 No worker shall be discharged by the Contractor or Subcontractor or in any other manner discriminated against because such worker has filed an inquiry or complaint, has instituted or caused to be instituted any legal or equitable proceeding or has testified or is about to testify in any such proceeding under or relating to the prevailing wage rates for this project.

5.23.4 **Withholding**

5.23.4.1 **The El Paso City Government, shall upon its own action withhold or cause to be withheld from the contractor under this contract or any other contract which is held by the same prime contractor, so much of the accrued payments or advances as may be considered necessary to pay laborers**

and mechanics, including apprentices, trainees, and helpers, employed by the contractor or any subcontractor the full amount of wages required by the contract.

5.23.4.2 **In the event of failure to pay any laborer or mechanic including any apprentice, trainee, or helper, employed or working on the site of the work all or part of the wages required by the contract, the El Paso City Government, may, after written notice to the contractor, take such action as may be necessary to cause the suspension of any further payment, advance, or guarantee of funds until such violations have ceased.**

5.24 Apprentices

5.24.1 Information relating to the apprenticeship program, use of apprentices and trades shall be submitted prior to the start of the work of the applicable occupations listed below. City construction contracts require that the construction contractors performing work for the City for such contract shall participate in a United States Department of Labor ("DOL") certified apprenticeship program when the work required under the contract includes work that must be performed by any of the apprenticeable occupations listed in the City's apprenticeship program adopted September 24, 2013, as amended, and the work involving such apprenticeable occupation has a value of **fifty thousand dollars** or more. Prior to the start of the work of the applicable apprenticeable occupations listed below the contractor or the applicable subcontractor through the prime contractor shall provide written certification to the city that it is a sponsor or participant in a DOL approved apprenticeship program.

Apprenticeable Occupations:

Bricklayer
Carpenter
Cement mason
Drywall applicator
Electrician
Glazier
Operating engineer
Painter
Pipefitter
Plasterer
Plumber
Roofer
Sheet metal worker
Structural worker/ironworker
Taper
Carpenter – Acoustical Ceilings
Cabinet Maker
HVAC
Insulation Worker
Electronic Technician
Elevator Installer & Repairer
Foor Layer

Locksmith
Tile and Marble Setter

5.24.2 Apprentices will be permitted to work at less than the predetermined rate for the work they performed when they are employed pursuant to and individually registered in a bona fide apprenticeship program registered with the U.S. Department of Labor, Employment and Training Administration, Bureau, or if a person is employed in his or her first 90 days of probationary employment as an apprentice in such an apprenticeship program, who is not individually registered in the program, but who has been certified by the Bureau of Apprenticeship & Training or a State Apprenticeship Agency (where appropriate) to be eligible for probation employment as an apprentice. The allowable ratio of apprentices to journeymen on the job site in any craft classification shall not be greater than the ratio permitted to the contractor/subcontractor as to the entire work force under the registered program.

5.24.3 The Contractor shall furnish the City's Engineering Department with sufficient information, which demonstrates that apprentices are employed pursuant to and individually registered in a bona fide apprenticeship program. Any worker listed on a payroll at an apprentice wage rate, who is not registered or otherwise employed as stated above, shall be paid not less than the applicable wage rate on the City wage determination for the classification of work actually performed. In addition, any apprentice performing work on the job site in excess of the ratio permitted under the registered program shall be paid not less than the applicable wage rate on the City wage determination for the work actually performed. Every apprentice must be paid at not less than the rates specified in the registered program for the apprentice's level of progress, expressed as a percentage of the journeyman's hourly rate specified in the City wage determination.

5.24.4 Apprentices shall be paid fringe benefits in accordance with the provisions of the apprenticeship program. If the apprenticeship program does not specify fringe benefits, apprentices must be paid the full amount of fringe benefits listed on the wage determination for the applicable classification. If the Bureau of Apprenticeship Training determines that a different practice prevails for the applicable apprentice classification, fringe benefits shall be paid in accordance with that determination. In the event the Bureau of Apprenticeship & Training, or a state apprenticeship agency recognized by the Bureau, withdraws approval of an apprenticeship program, the contractor will no longer be permitted to utilize apprentices at less than the applicable predetermined rate for the work performed until an acceptable program is approved.

5.25 Addendum to the Contract – Apprenticeship Program

5.25.1 The employment and use of apprentices to prosecute the completion of the work shall be governed by the provisions of paragraph 6.5.4 hereof and the Addendum of the Contract “Apprenticeship Program”, both of which are contained herein and incorporated herein.

5.25.2 In accordance with Resolution of the City Council of the City of El Paso, Texas regarding Apprenticeship Programs in City Projects adopted on June 1, 2010, the Contractor and each subcontractor must comply with the following:

5.25.2.1 Shall participate in a United States Department of Labor (DOL) certified apprenticeship program when the work required under the contract includes work that must be performed by apprenticeable occupations and the work involving such apprenticeable occupation has a value of *fifty thousand dollars* or more. The apprenticeable occupations are those listed in 5.24.1.

5.25.2.2 Shall hire registered apprentices enrolled in a DOL certified apprenticeship program;

5.25.2.3 Shall not substitute helpers, unregistered apprentices or other substitutes to perform apprentice level work in place of registered apprentices.

5.25.2.4 Shall pay wage rates and benefit package for apprentices as determined by the apprenticeship program/DOL;

5.25.2.5 Shall comply with DOL requirements for the ratio of apprentices to journeymen; and

5.25.2.6 Shall hire apprentices in all job classifications utilized on the project that are “apprenticeable occupations” listed in paragraph 5.24.1.

5.25.2.7 Noncompliance of the contract provisions concerning the apprenticeship participation may be a basis to terminate the construction contract, which shall be referred to the City Council for determination.

5.25.3 The Contractor shall post the prevailing wage rate schedules made part of this contract at each work site in a prominent location readily accessible to the workers through the duration of the project. In addition, the Contractor shall post a notice to be provided by the City Engineer regarding prevailing wage rates and the City of El Paso Apprenticeship Program, in English and Spanish, which shall be posted nearby the prevailing wage rates schedules.

5.25.4 The Contractor shall, in addition to all other information items to be provided to City, certify to City the names of all apprentices on the project; verification of their status as registered apprentices; and documentation as to their proper wage rates; and documentation as the journeyman-to-apprentice ratios for each trade as determined by the apprenticeship program.

5.25.5 No worker shall be discharged by the Contractor or Subcontractor or in any

other manner discriminated against because such worker has filed an inquiry or complaint, has instituted or caused to be instituted any legal or equitable proceeding or has testified or is about to testify in any such proceeding under or relating to the apprenticeship program.

5.25.6 The Contractor and every subcontractor shall allow immediate entry, into all areas of the job site, by the City Engineer and his/her agents and representatives displaying and presenting proper identification credentials to the job site superintendent or his/her representative. While on the job site the City Engineer and his/her agents and representatives may inspect for all job site and regulations, including but not limited to those concerning safety, security and fire prevention. The Contractor and each subcontractor shall allow any employee to be interviewed at random, at any time and for any reasonable duration by the City Engineer and his/her agents and representatives to determine compliance with the provisions of this contract regarding the apprenticeship program. *The Contractor and each subcontractor shall allow access to its personnel and apprenticeship books and records, at any time and for any reasonable duration by the City Engineer and his/her agents and representatives to determine compliance with the provisions of this contract regarding the apprenticeship program.*

5.25.7 The City reserves the right to terminate this Contract for cause in the Contractor and/or any subcontractor shall breach any of these provisions regarding the apprenticeship program.

5.25.8 The Contractor shall cause these and any other appropriate provisions regarding the apprenticeship program to be inserted in all subcontractor relative to the work to bind the subcontractor to the same apprenticeship program requirements as are applicable to the Contractor.

6.0 PROSECUTION AND PROGRESS

6.1 Subcontracting

6.1.1 The Contractor may utilize the services of specialty subcontractors on those parts of the work which, under normal contracting practices, are performed by specialty subcontractors.

6.1.2 The Contractor shall not award any work to any subcontractor without prior written approval of the Owner, which approval will not be given until the Contractor submits to the Owner a written statement concerning the proposed award to the subcontractor, which statement shall contain such information as the Owner may require.

6.1.3 The Contractor shall be as fully responsible to the Owner for the acts and omissions of his/her subcontractors, and of persons either directly or indirectly employed by them, as the Contractor is for the acts and omissions of persons directly employed by him/her.

6.1.4 The Contractor shall cause appropriate provisions to be inserted in all subcontracts relative to the work to bind subcontractors to the Contractor by

the terms of the General Conditions and other contract documents insofar as applicable to the work of subcontractors and to give the Contractor the same power as regards to the termination of any subcontract that the Owner may exercise over the Contractor under any provisions of the contract documents.

6.1.5 Nothing contained in this contract shall create any contractual relation between any subcontractor and the Owner.

6.1.6 The Owner shall have no responsibility to any subcontractor employed by the contractor for performance of work on the Project contemplated by these contract documents, but said subcontractors will look exclusively to the Contractor for any payments due subcontractors.

6.2 Notice and Service Thereof

Any notice to any Contractor from the Owner or Owner's designated representative relative to any part of this contract shall be in writing and considered delivered and the service thereof completed when said notice is posted, by certified or registered mail, to the said Contractor at his/her last given address, or delivered in person to said Contractor or his/her authorized representative on the work site.

6.3 Progress Schedule

6.3.1 The Contractor, when required, shall furnish the City Engineer with a "Progress Schedule" for approval. The progress schedule may be used to establish major construction operations and to check on the progress of the work. The Contractor shall provide sufficient materials, equipment, and labor to guarantee the completion of the project in accordance with the plans and specifications within the time set forth in the schedule.

6.3.2 If the Contractor falls significantly behind the submitted schedule, the Contractor shall submit a revised schedule for completion of the work within the contract time and modify the operations to provide such additional materials, equipment, and labor necessary to meet the revised schedule. Should the prosecution of the work be discontinued for any reason, the Contractor shall notify the City Engineer at least 24 hours in advance of resuming operations.

6.4 Limitation of Operations

6.4.1 Working Day - A working day shall be any day other than a Saturday, Sunday or legal holiday of the City of El Paso on which the working forces of the Contractor may proceed with regular work for at least six (6) hours toward completion of the contract. Unless work is suspended for causes beyond the Contractor's control, Saturdays, Sundays and holidays on which the Contractor's forces engage in regular work requiring the presence of a City Inspector will be considered as work days.

6.4.2 Contractor's Work Hours - Unless other days and hours of work are

specifically prescribed in the technical specifications for this project, the days and hours during which the Contractor may perform work under this contract are specifically limited, as follows:

6.4.2.1 The Contractor may not perform any work on the project, including grading, excavation, installation of materials or fabrication of subassemblies other than between the hours of 8 a.m. and 4:30 p.m. of each working day.

6.4.2.2 The Contractor may not start, warm up, or operate equipment, deliver, or handle materials or perform any other activity which might disturb adjacent residents or business prior to 7:30 a.m. of each working day.

6.4.2.3 The Contractor shall have completed all operation at the work site, stored all equipment and materials, and completed all clean up at the work site prior to 6 p.m. of each working day.

6.4.2.4 The legal holidays of the City of El Paso are:

6.4.2.4.1 New Year's Day
6.4.2.4.2 Labor Day
6.4.2.4.3 Martin Luther King's Birthday
6.4.2.4.4 Thanksgiving Day & the Friday following Thanksgiving Day (2 days)
6.4.2.4.5 Memorial Day
6.4.2.4.6 Christmas Day
6.4.2.4.7 Fourth of July

6.4.2.5 Permission to work outside the hours and days specified above may be granted by the City Engineer but will be granted only under exceptional circumstances involving the safety or convenience of the public. Such permission will not be granted to allow the Contractor to advance or recover his/her contract schedule unless the safety and convenience of the public are involved. Permission to work outside of normal hours as specified above must be requested in writing by 4:30 p.m. of a working day, no less than seven (7) work days prior to the date on which the Contractor wishes to commence overtime operations. The hours of work specified in this subparagraph are only for the purpose of ensuring that work can be inspected when performed and for minimizing disturbance to the public. They do not prescribe "normal working hours" for the purpose of compliance with legislation involving wages. In any event, if a condition should occur or arise at the site of this project, or from the work being done under this contract which is hazardous or dangerous to property or life, the Contractor shall immediately commence work, regardless of the day of the week or the time of day, to correct or alleviate such condition so that it is no longer dangerous to property or life.

6.4.2.6 When requesting to work other than normal work hours as specified herein, the Contractor will be charged for the overtime payment to the City Inspector and any testing personnel required.

6.5 Character of Workmen; Methods and Equipment

6.5.1 At the site of the work, the Contractor shall employ a qualified full-time construction superintendent or foreman who shall have full authority to act for the Contractor. It is understood that such representative shall be acceptable to the Owner or Owner's designated representative and shall be one who can continue in that capacity for the particular job involved unless he/she ceases to be on the Contractor's payroll. The use of a subcontractor's foreman as project superintendent will not be allowed.

6.5.2 The Contractor shall at all times employ sufficient labor and equipment for prosecuting the several classes of work to full completion in a manner and time required by the contract.

6.5.2.1 All workmen shall have sufficient skill and experience to perform properly the work assigned to them. Workmen engaged in special work or skilled work shall have sufficient experience in such work and in the operation of the equipment required to perform the work satisfactorily.

6.5.2.2 Any person employed by the Contractor or by any subcontractor who, in the opinion of the City Engineer, does not perform his work in a proper and skillful manner or is intemperate or disorderly shall, at the written request of the City Engineer, be removed forthwith by the Contractor or subcontractor employing such person, **and shall not be reemployed in any portion of the Project or work without the approval of the City Engineer**.

6.5.2.3 Should the Contractor fail to remove such person or persons as required above, or fail to furnish suitable and sufficient personnel for the proper prosecution of the work, the City Engineer may, by written notice, suspend the work until the Contractor complies with the provisions of this paragraph.

6.5.3 All equipment, which is proposed to be used on the work, shall be of sufficient size and in such mechanical condition as to meet requirements of the work and to produce a satisfactory quality of work. Equipment used on any portion of the project shall be such that no injury to the street, adjacent property, or other structures will result from its use.

6.5.3.1 When the methods and equipment to be used by the Contractor in accomplishing the construction are not prescribed in the contract, the Contractor is free to use any methods or equipment that will accomplish the contract work in conformity with the requirements of the contract, provided that no other provisions of the contract are violated.

6.5.4 The employment of apprentices by the Contractor may be **mandatory.** When required the Contractor shall at all times employ apprentices in U.S. Department of Labor certified apprenticeship programs, in such amounts and trades, as are set forth in the Schedule of Categories of Apprentices, which Schedule is maintained by the Office of the City Engineer. See 5.24 & 5.25 for more details.

6.6 Progress Photographs

The Contractor will furnish photographs in the number, type and state as enumerated below:

N/A

6.7 Suspension of Work

The Contractor shall have no claim for compensation or damages for compensation or damages for delay, including but not limited to lost profits or home office expenses/overhead, should the Contractor be prevented from proceeding with the work required by this contract either before or after the start of construction by any act or omission of the Owner or any reason beyond the control of the Owner. The Contractor further agrees that the Contractor shall be granted an extension of time to perform the work required by the contract but shall not be otherwise compensated for nor entitled to recover any additional costs or expenses arising from such delays.

6.8 Time for Completion and Liquidated Damages

6.8.1 It is hereby understood and mutually agreed by and between the Contractor and the Owner, that the date of beginning and the time for completion as specified in the contract of the work to be done hereunder are ESSENTIAL CONDITIONS of this contract; and it is further mutually understood and agreed that the work embraced in this contract shall be commenced on a date to be specified in the "Notice to Proceed".

6.8.2 The Contractor agrees that said work shall be prosecuted regularly, diligently and uninterruptedly at such rate of progress as will ensure completion thereof within the time specified. It is expressly understood and agreed, by and between the Contractor and Owner, that the time for the completion of work described herein is a reasonable time for the completion of the same, taking into consideration the average climatic change and conditions and usual industrial conditions prevailing in this locality.

6.8.3 **Liquidated Damages-Substantial Completion.** If the said Contractor shall neglect, fail or refuse to complete the work within the time herein specified or any proper extension thereof granted by the Owner, then the Contractor does hereby agree, as part consideration for the awarding of this contract, to pay to the Owner the amount specified in the contract, not as a penalty but as liquidated damages for each such breach of contract set forth herein, for each and every consecutive calendar day that the Contractor shall be in default after the time stipulated in the contract for substantially completing the work.

6.8.3.1 **Liquidated Damages-The Remaining Work** The Remaining Work, as such work is determined by the City Engineer pursuant to section 3.7, shall be completed within the Contract Time or any proper extension thereof granted by Owner. If the Contractor shall neglect, fail or refuse to complete the Remaining Work within the Contract Time or any proper extension thereof granted by the Owner, then the Contractor does hereby agree, as part consideration for the awarding of this contract, to pay to the Owner the amount specified in the contract, not as a penalty but as liquidated damages for the Remaining Work for each such breach of contract set forth herein for each and every consecutive calendar day that the Contractor shall be in default after expiration of the Contract Time.

6.8.4 The said amount is fixed and agreed upon by and between the Contractor and the Owner because of the impracticability and extreme difficulty of fixing and ascertaining the actual damages the Owner would in such event sustain, and said amount is agreed to be the amount of damages which the Owner would sustain and said amount shall be retained from time to time by the Owner from current periodical estimates.

6.8.5 It is further agreed that time is of essence of each and every portion of this contract and of the specifications wherein a definite and certain length of time is fixed for the performance of any act whatsoever; and where under the contract an additional time is allowed for the completion of any work, the new time limit fixed by such extension shall be of the essence of this contract. Provided, that the Contractor shall not be charged with liquidated damages or any excess cost when the Owner determines that the Contractor is without fault and the Contractor's reasons for the time extension are acceptable to the Owner; provided, further, that the Contractor shall not be charged with liquidated damages or any excess cost when the delay in completion of the work is due:

6.8.5.1 To any preference, priority, or allocation duly issued by the Government;

6.8.5.2 To unforeseeable causes beyond the control and without the fault or negligence of the Contractor. Including, but not restricted to, acts of God, or of the public enemy, acts of the Owner, acts of another Contractor in the performance of a contract with the Owner, fires, floods, epidemics, quarantine restrictions, strikes, freight embargoes and severe weather;

6.8.5.3 To any delays of subcontractors or suppliers occasioned by any of the causes specified in subparagraphs 6.8.5.1 and 6.8.5.2 of this paragraph; provided, further, that the Contractor shall, within ten (10) work days from the beginning of such delay, unless the Owner shall grant a further period of time prior to the date of the final settlement of the contract, notify the Owner, in writing, of the causes of the delay; the Owner shall ascertain the facts and extent of the delay and notify the Contractor within a reasonable time of its decision in the matter.

6.9 Right of Owner to Terminate Contract

6.9.1 In the event that any of the provisions of this contract are violated by the Contractor, or by any of his/her subcontractors, the Owner may serve written notice to contain the reasons for such intention to terminate the contract, and unless within ten (10) work days after the serving of such notice upon the Contractor, such violation or delay shall cease and satisfactory arrangement of correction be made, the contract shall, upon the expiration of said ten (10) work days, cease and terminate. The City shall have the right to immediately terminate the Contract for default if the Contractor violates any local, state, or federal laws, rules or regulations that relate to the performance of this Agreement.

6.9.1.1 In the event of such termination, the Owner shall immediately serve notice thereof upon the Surety and the Contractor, and the Surety shall have the right to take over and perform the contract, and shall execute a Take over Agreement with the Owner evidencing such intention to take over and perform the contract. Provided, however, that if the surety does not commence performance thereof within ten (10) work days from the date of the mailing of such notice to surety of termination, the Owner may take over the work and prosecute the same to completion by contract or by force, and utilize in completing the work, such materials, appliances and plant as may be on the site of the work and necessary therefore.

6.9.1.2 All costs and charges incurred by the Owner, including the costs of securing the construction site until resumption of work under the contract, together with the cost of completing the work under the contract, will be deducted from any monies due the Contractor or remaining on the contract. If such expenses exceed the sum which would have been payable under the contract, the Contractor and Surety shall be liable to the Owner for said amount.

6.9.2 The Owner may, at any time, at will and without cause, terminate any part of the work to be performed or all remaining work for any reason whatsoever by giving seven (7) days prior written notice to the Contractor. The owner shall incur no liability to the Contractor by reason of such termination, except that the Contractor shall be entitled to payment for work properly completed in accordance with this contract prior to the effective date of the termination. In the event that only part of the work is terminated, the Contractor shall continue in full force and effect as to all remaining work to be completed. <u>The owner shall not be responsible for compensation or damages for delay, damages for loss of anticipated profits on work not performed, demobilization or cancellation costs or charges on account of any termination.</u>

6.9.3 Upon a determination by a court of competent jurisdiction that a termination of the Contractor by the Owner pursuant to subparagraph (A) herein was

wrongful, such termination will be deemed converted to a termination for convenience pursuant to subparagraph (B) herein and the Contractor's remedy for wrongful termination shall be limited to the recovery permitted for termination for convenience as set forth in subparagraph (B) herein.

6.10 Default of Contract

6.10.1 The following reasons shall consist default of this contract:

6.10.1.1 If the Contractor fails to begin the work under the contract within the time specified in the Notice to Proceed, or

6.10.1.2 If the Contractor fails to perform the work with sufficient workmen and equipment or with sufficient materials to assure the prompt completion of said work, or

6.10.1.3 If the Contractor fails to perform the work in accordance with the contract requirements and/or refuses to remove and replace rejected materials or unacceptable work, or

6.10.1.4 If the Contractor discontinues the prosecution of the work, or

6.10.1.5 If the Contractor fails to resume work that has been discontinued within a reasonable time after notice to do so, or

6.10.1.6 If Contractor fails to complete any remaining punch list items for the project after notice to do so,

6.10.1.7 If the Contractor becomes insolvent or is declared bankrupt, or commits any act of bankruptcy or insolvency, or

6.10.1.8 If the Contractor allows any final judgment to remain unsatisfied for a period of 10 days, or

6.10.1.9 If the Contractor makes an assignment for the benefit of creditors, without obtaining the written consent of the Owner and the Surety or Sureties, or

6.10.1.10 If the Contractor fails to comply with contract requirements regarding minimum wage payments or EEO requirements, or

6.10.1.11 If the Contractor, for any other cause whatsoever, fails to carry on the work in an acceptable manner.

6.10.1.12 If the Contractor violates any local, state, or federal laws, rules or regulations that relate to the performance of this Agreement.

6.10.2 The City Engineer will give notice in writing to the Contractor and the Surety of such delay, neglect, or default.

6.10.3 If the Contractor or Surety, within a period of 10 days after such notice,

does not proceed in accordance therewith, then the Owner will have full power and authority without violating the contract, to take the prosecution of the work out of the hands of the Contractor. The Owner may enter into an agreement for the completion of said contract according to the terms and provisions thereof, or use such other methods as in the opinion of the Owner will be required for the completion of said contract in an acceptable manner.

6.10.4 All costs and charges incurred by the Owner, including the costs of securing the construction site until resumption of work under the contract, together with the cost of completing the work under the contract, will be deducted from any monies due or remaining on the contract. If such expense exceeds the sum which would have been payable under the contract, then the Contractor and the Surety shall be liable to the Owner for said amount.

7.0 PAYMENTS

7.1 Construction Schedule and Periodic Estimates

7.1.1 Immediately after execution and delivery of the contract, and before the first partial payment is made, the Contractor shall deliver to the Owner an estimated construction progress schedule in a form satisfactory to the Owner, showing the proposed dates of commencement and completion of each of the documents and the anticipated amount of each monthly payment that will become due the Contractor in accordance with the progress schedule. The Contractor shall also furnish, on forms to be supplied by the Owner or Owner's designated representative:

7.1.1.1 A detailed estimate giving a complete breakdown of the contract price, and

7.1.1.2 Periodic itemized estimates of work, done for the purpose of making partial payments thereon. The costs employed in making up any of these schedules will be used only for determining the basis of partial payments and will not be considered as fixing a basis for additions to or deductions from the contract price.

7.2 Progress Payments

7.2.1 The Contractor shall request a meeting, at the construction site with the appointed City Inspector and the Owner's designated representative on or about the twenty-fifth (25) of each month, to discuss progress and payment. Upon approval of the completion estimate, the Contractor shall submit an Application of Certificate for Payment, using the AIA documents G702 and G702A, accompanied by a current progress schedule. The Contractor shall submit his/her estimate not later than the first day of the month. The estimate shall indicate the amount of the work completed in percentages which was performed by subcontractors employed by the Contractor. The Owner shall have the right to review the estimate, dispute and revise the estimate based upon the Owner’s review of the progress of the work and pay the Contractor in accordance with the Owner’s findings. If the Owner

disputes the estimates, the dispute shall constitute a bona fide dispute and payment to the Contractor shall be excepted from the requirements of Chapter 2251 ("Chapter 2251") of the Texas Government Code pursuant to Section 2251.002 thereof. Upon approval of the pay request by the City Engineering Department, the following will apply:

7.2.1.1 The Owner shall make a progress payment to the Contractor in accordance with Chapter 2251, subject to applicable exceptions. Payment by the Owner will be based on the duly certified and Owner-approved estimate of the work performed during the preceding calendar month under this contract.

7.2.1.2 To ensure the proper performance of this contract, the Owner shall retain ten percent (10%) of the amount of each estimated payment for contracts in an amount of less than four hundred thousand and no/100 dollars ($400,000.00) and five percent (5%) of the amount of each estimated payment for contracts in the amount of four hundred thousand and no/100 dollars ($400,000.00) or more. The Owner may release up to fifty percent (50%) of the amount retained at the time the Owner certifies to Contractor that substantial completion has been achieved within the contract time. The remaining retainage shall not be released to Contractor until such time as the final completion and acceptance of all work covered by this contract has been achieved.

Payment of retainage for unit price contracts shall be based on the current value of the contract at the time of substantial completion.

Retainage may be reduced by Owner for deductions from the contract price, including but not limited to liquidated damages. Release of any retainage is subject to approval by the Surety providing the bonds required of the Contractor.

7.2.1.3 In preparing estimates, the material delivered on the site and preparatory work done may be taken into consideration.

7.2.1.4 All material and work covered by partial payments made shall thereupon become the sole property of the Owner, but this provision shall not be construed as relieving the Contractor from the sole responsibility for the care and protection of materials and work upon which payments have been made or the restoration of any damaged work, or stored materials stolen, nor be construed as a waiver of the right of the Owner to require the fulfillment of all of the terms of the contract.

7.2.1.5 The Owner shall, for all public works contracts in excess of $400,000, invest all retainage over five percent (5%) of payments, if any, under this contract, in interest bearing accounts and pay such interest to the Contractor upon completion of the

contract. All other applicable terms and definitions in Section 2252.032, Texas Government Code, are hereby incorporated by reference in this paragraph.

7.2.1.6 The contractor agrees that he/she will indemnify and save the owner harmless from all claims growing out of the lawful materialmen and furnishers of machinery and parts thereof, equipment, power tools, and all supplies, including commissary, incurred in the furtherance of the performance of this contract. in accordance with tex. prop. code ann. 53.231 et. seq., when the amount of this contract does not exceed $25,000 and when the owner has received a notice of an unpaid claim(s) from a person who has furnished materials or labor in connection with the performance of a public works contract, the owner may, after having served written notice on said contractor, either pay unpaid claims of which the owner has written notice thereof, or direct or withhold from the contractor's unpaid compensation a sum of money deemed reasonably sufficient to pay any and all such lawful claims until satisfactory evidence is furnished that all liabilities have been fully discharged, whereupon payment to the contractor shall be resumed, in paying any unpaid claims in accordance with Texas property code ann. 53.231 et seq., the owner shall be deemed the agent of the contractor, and any payment so made by the owner shall be considered as a payment made under the contract by the owner to the contractor.

7.3 Assignments

The Contractor shall not assign the whole or any part of the contract, or any monies due or to become due hereunder without written consent of the Owner and Surety. In case the Contractor assigns all or any part of any monies due or to become due under this contract, the instrument of assignments shall contain a clause substantially to the effect that it is agreed that the right of the assignee in and to any monies due or to become due to the Contractor shall be subject to prior claims of all persons, firms and corporations of services rendered or materials supplied for the performance of the work called for in this contract.

7.4 Acceptance of Final Payment Constitutes Release

The acceptance by the Contractor of final payment shall be, and shall operate as a release to the Owner of all claims and all liability to the Contractor for all things done or furnished in connection with this work and for every act and neglect of the Owner and others relating to or arising out of this work. No payment, however, final or otherwise, shall operate to release the Contractor or his/her sureties from any obligations under this contract or from the Performance and Payment Bonds.

7.5 Payrolls and Basic Records

7.5.1 Payrolls and basic records relating thereto shall be maintained by the Contractor during the course of the work and preserved for a period of three (3) years thereafter for all laborers and mechanics working at the site of the

work. Such records shall contain the name, address, and social security number of each such worker, the workers correct classification, hourly rates of wages paid, including rates of contributions or costs anticipated for bona fide fringe benefits or cash equivalents thereof, daily and weekly number of hours worked, deductions made and actual wages paid.

7.5.2 Whenever the City of El Paso has found that the wages of any laborer or mechanic include the amount of any costs reasonably anticipated in providing benefits under a plan or program, the Contractor shall maintain records which show that the commitment to provide such benefits is enforceable, that the plan or program is financially responsible, and the plan or program has been communicated in writing to the laborers or mechanics affected, and records which show the costs anticipated or the actual cost incurred in providing such benefits.

7.5.3 Contractors employing apprentices and trainees under approved programs shall maintain written evidence of the registration of apprenticeship programs and certification of trainee programs, the registration of the apprentices and trainees, and the ratios and wage rates prescribed in the applicable programs.

7.5.4 The Contractor shall submit weekly for each week in which any contract work is performed the original copy of all payrolls submitted shall set out accurately and completely all of the information required to be maintained. This information may be submitted in any form desired. Optional form WH-347 is available for this purpose and may be purchased from the Superintendent of Documents (Federal Stock Number 029-005-00014-1), U.S. Government Printing Office, Washington, D.C. 20402. The prime Contractor is responsible for the submission of copies of payrolls by all subcontractors.

7.5.4.1 Each payroll submitted shall be accompanied by a “Statement of Compliance”, signed by the Contractor or Subcontractor or the agent who pays or supervises the payment of the persons employed under the contract and shall certify the following:

7.5.4.1.1 That the payroll for the payroll period contains the information required, and that such information is correct and complete.

7.5.4.1.2 That each laborer or mechanic (including each helper, apprentice, and trainee), employed on the contract during the payroll period has been paid the full weekly wages earned, without rebate, either directly or indirectly, and that no deductions have been made either directly or indirectly from the full wages earned other than permissible deductions.

7.5.4.1.3 That each laborer or mechanic has been paid not less than the applicable wage rates and fringe benefits or cash equivalents for the classification of work performed, as specified in the applicable wage determination

incorporated into the contract.

7.5.4.2 The falsification of any of the above certifications may subject the Contractor or the Subcontractor to debarment.

7.5.4.3 The Contractor or Subcontractor shall make the records required under this section available for inspection, copying or transcription by authorized representatives of the El Paso City Government and/or appropriate State or Federal agency, and shall permit such representatives to interview employees during working hours on the job. If the Contractor or Subcontractor fails to submit the required records or to make them available, the City of El Paso may, after written notice to the Contractor, take such action as may be necessary to cause the suspension of any further payment, advance, or guarantee of funds. Furthermore, failure to submit the required records upon request or to make such records available may be grounds for debarment.

8.0 DISPUTES AND REMEDIES

8.1 Dispute Resolution

In the event of any controversy or claim arising out of or in any way related to this contract, the parties agree to submit the controversy or claim to a mutually agreed upon non-binding alternative dispute resolution procedure prior to the filing of a lawsuit with respect to the controversy or claim. The cost of the alternative dispute resolution procedure shall be divided and borne equally by the parties.

8.2 Governing Law

This contract shall be governed by the law of the place where the project is located.

8.3 Rights and Remedies

The duties and obligations imposed by the contract documents and the rights and remedies available there under shall be in addition to and not a limitation of any duties, obligations, rights and remedies otherwise imposed or available by law.

8.4 Illegality

If any provision of this contract or the application thereof to any person or circumstance is rendered or declared illegal for any reason or shall be invalid or unenforceable, the remainder of this contract and the application of such provision to other persons or circumstance shall not be affected thereby but shall be enforced to the extent permitted by law. The parties agree to negotiate in good faith for a proper amendment to this contract in the event any provision is declared illegal, invalid or unenforceable to reflect the original intent of the parties.

9.0 RECORDS/AUDIT

9.1 The City of El Paso, its authorized representative, and/or the appropriate State or Federal agency reserve the right to audit the Contractor's records pertaining to this

project to verify the accuracy and appropriateness of all pricing data, including data used to negotiate any Change Orders. The City of El Paso reserves the right to decrease the contract amount and/or payments made on this contract, if upon audit of the project's records, the audit discloses that false, misleading or inaccurate cost and/or pricing data has been provided.

9.2 Additionally, authorized representatives and agents of the City, State or Federal agencies, if applicable, shall be permitted to interview any personnel performing work on behalf of or in relation to the project, including but not limited to, field and office personnel.

SAFETY STANDARD AND ACCIDENT PREVENTION

With respect to all work performed under this contract, the Contractor shall:

a. Comply with the safety standards provisions of applicable laws, building and construction codes, and the "Manual of Accident Prevention in Construction" published by the Associated General Contractors of America, the requirements of the Occupational Safety and Health Act (OSHA) of 1970 (Public Law 91-596), including but not limited to OSHA Standards.

b. Maintain at his office or other well-known place at the job site, all articles necessary for giving first aid to the injured, and shall make standing arrangements for the immediate removal to a hospital or a doctor's care of person (including employees), who may be injured on the job site. In no case shall employees be permitted to work at a job site before the employer has made a standing arrangement for removal of injured persons to a hospital or a doctor's care.

c. Shall exercise proper precaution at all times for the protection of persons and property and shall be responsible for all damages to persons or property, either on or off the site, which occurs as a result of his prosecution of the works. The City of El Paso may require additional safety and health measures as it may determine to be reasonably necessary. Accident prevention measures such as safety training and education, proper illumination, fire prevention, and provisions of personal protective equipment shall comply with OSHA Standards.

An OSHA package will be furnished to the Contractor at the required preconstruction meeting before a Notice to Proceed is issued on this project.

TRENCH SAFETY SYSTEM
(FOR PROJECTS WHERE TRENCHING IS INVOLVED)

A. GENERAL DUTIES AND RESPONSIBILITIES

a) The Contractor shall be required to install a Trench Safety System to provide for the safe excavation of all trenches exceeding a depth of five feet (5'), as per Occupational Safety and Health Act (OSHA) standards.

b) It shall be the duty and responsibility of the Contractor and all its subcontractors to be familiar and comply with all requirements of Public Law 91-596, 29 U.S.C. Secs. 651 et seq., the Occupational Safety and Health Act (OSHA) of 1970, and all amendments thereto, and to enforce and comply with all the provisions of this Act. In addition, on projects in which trench excavation will exceed a depth of five feet (5'), the Contractor and all subcontractors shall comply with all requirements of 29 C.F.R. Secs. 1926.651 and 1926.652, OSHA Safety and Health Standards, which are more fully described herein, and shall require a pay item classification, a described below.

1) The Contractor will be required to submit three (3) sets of a Trench Safety System to the Deputy Director for Engineering for review within twenty-one (21) consecutive calendar days after notification that he has been awarded the contract. Submitted plans and specifications will be considered part of the bid documents and will become part of the contract documents.

2) Submitted plans must be signed and sealed by a professional registered in the State of Texas, with professional experience in Geotechnical Engineering. The Contractor is responsible for obtaining borings and soil analysis, as required for the design and preparation of the Trench Safety System. The Trench Safety System shall be designed in conformance with OSHA standards and regulations.

3) No trenching in excess of five feet (5') below existing grade will be allowed until the Trench Safety System is reviewed. Changes in the Trench Safety System after initiation of construction will not be considered as a basis for an **extension of time** or change order. Each change will require the same review process, as per the original Trench Safety System.

4) The Contractor accepts sole responsibility for compliance with all applicable safety requirements. The review is only for general conformance with OSHA safety standards; and review of the Trench Safety System does not relieve the Contractor of responsibility for any or all construction means, methods, techniques and procedures.

5) Any property damage or bodily injury, including death, that arises from use of the trench or from the Owner's failure to note exceptions to the Trench Safety System shall remain the sole responsibility and liability of the Contractor.

6) Contractors have three (3) generally accepted methods or combination thereof to meet OSHA standards for Trench Safety System:

   a) Minimum angle of repose for sloping of the sides of excavations.

   b) Utilization of trench box.

   c) Shoring, sheeting, and bracing methods.

7) Contractors electing to utilize the minimum angle of repose must submit:

   a) Soil classification according to the Unified Soil Classification System, including water content and plasticity index, a minimum angle of the slope of excavation for the trench.

   b) A detailed plan of the excavation area and the impact on existing right-of-way and infrastructure.

8) Contractors electing to utilize a trench box must submit physical dimensions, materials, position in the trench, expected loads and the strength of the box.

9) Contractors electing to utilize shoring, sheeting, and bracing must submit dimensions and materials of all uprights, stringers, cross-bracing and spacing required to meet OSHA requirements. No claims for delay will be permitted.

10) The Deputy Director for Engineering has the authority to request for review all design data, calculations and information pertinent to the Trench Safety Systems.

B. INDEMNIFICATION

THE CONTRACTOR SHALL INDEMNIFY AND HOLD HARMLESS THE OWNER, ITS EMPLOYEES AND AGENTS FROM ANY AND ALL DAMAGES, COSTS (INCLUDING, AND WITHOUT LIMITATION, LEGAL FEES, COURT COSTS AND THE COST OF INVESTIGATION), JUDGEMENTS OR CLAIMS BY ANYONE, FOR INJURY OR DEATH OF PERSONS RESULTING FROM THE COLLAPSE OR FAILURE OF TRENCHES CONSTRUCTED UNDER THE CONTRACT.

THE CONTRACTOR ACKNOWLEDGES AND AGREES THAT THIS INDEMNITY PROVISION PROVIDES INDEMNITY FOR THE OWNER IN THE EVENT THAT A CLAIM IS MADE THAT THE OWNER IS NEGLIGENT EITHER BY ACT OR OMISSION IN PROVIDING FOR TRENCH SAFETY, INCLUDING, BUT NOT LIMITED TO, INSPECTIONS, FAILURE TO ISSUE STOP WORK ORDERS, AND THE HIRING OF THE CONTRACTOR.

C. DESCRIPTION

This item shall govern the Trench Safety Systems required for the construction of all trench excavation to be utilized in the project, including all additional excavation and backfill necessitated by the safety system. The Trench Safety System shall be suitable for construction of pipelines, utilities, etc., that are installed below grade and shall be sufficient to fully protect public or private property, including other existing utilities and structures below, or above grade. Trench Safety Systems include, but are not limited to, sloping of sides of excavation, sheeting, trench boxes or trench shields, sheet piling, cribbing, bracing, shoring, dewatering or diversion of water to provide adequate drainage.

The Contractor shall be responsible for the design of Trench Safety Systems and procedures such as the use of sheet piling, shoring or other means of temporary support to protect existing buildings, streets, highways, water conveying structures or any other structures. In the case of existing utilities, the Contractor may elect to remove the utilities under the stipulated condition that the removal and subsequent replacement of these utilities shall meet with the approval of the Engineer, the Owner, the Utility Owner, and all agencies having jurisdiction of the structure or property. In all cases, the Contractor shall be fully responsible for the protection of public, or private property, and for the protection of any person or persons who, as a result of the Contractor's work, may be injured.

D. CONSTRUCTION METHODS

Trench Safety Systems shall be accomplished in accordance with the detailed specifications set out in the provisions for Excavations, Trenching, and Shoring, Federal Occupational Safety and Health Administration (OSHA) Standards, 29 CFR, Part 1926, Subpart P, as amended, including proposed Rules published in the Federal Register (Volume 52, No. 72) on Wednesday, April 15, 1987. The sections that are incorporated into these specifications by reference include Sections 1926-650 through 1926-653.

Legislation that has been enacted by the Texas Legislature (H. B. No. 662 and H. B. No. 665) with regard to Trench Safety Systems, hereby incorporated by reference, into these specifications.

E. SAFETY PROGRAM

The Contractor shall submit a safety program specifically for the construction of trench excavations together with the trench excavation plans for Trench Safety Systems. The trench safety program shall be in accordance with OSHA standards governing the presence and activities of individuals working in and around trench excavations.

F. PAY ITEM

Measurement: Trench Safety Systems shall be measured by the linear foot along the centerline of trench including manholes and other line structures.

Payment: Payment for Trench Safety Systems, measured as prescribed above, shall be made at the unit price bid per linear foot of Trench Safety Systems. Payment of all work prescribed under this item shall be full compensation for the Trench Safety Systems including all design, testing, inspection, excavation, and backfill required to furnish, install, maintain and remove all shoring, sheeting, or bracing; for dewatering or diversion of water; for all jacking and jack removal; for required compaction; and for all other labor, material, tools, equipment, and incidentals necessary to complete the Trench Safety Systems work.

G. INSPECTION

The Contractor shall provide a qualified person to make daily inspections of the Trench Safety Systems to ensure that the systems meet OSHA requirements. The Contractor shall maintain a permanent record of daily inspections, and submit a weekly report to the Deputy Director for Engineering.

If evidence of possible cave-ins or slides is apparent, all work in the trench shall cease until the necessary precautions have been taken by the Contractor to safeguard personnel entering the trench. It is the sole duty, responsibility, and prerogative of the Contractor, not the Owner or the Owner's designated representative, to determine the specific applicability of the designed Trench Safety Systems to each field condition encountered on the project.

H. EMERGENCIES

In any emergency situation which may threaten or affect the safety or welfare of persons or property, the Contractor shall act at his discretion to prevent possible damage, injury, or loss. Any additional compensation or extension of time claimed for such action shall be considered in view of the cause of the emergency and in accordance with Paragraph 5.7 of the General Conditions of the Contract, Protection of Work and Property Emergency.

FEDERAL AVIATION ADMINISTRATION (FAA) CONTRACT PROVISIONS

In this Section the term "Airport Sponsor" shall refer to the "City".

If there are any conflicts between the terms and conditions this section and the construction contract, the terms of this Section will prevail.

A. GENERAL REQUIREMENT FOR CONTRACT

1. The contractor (including all subcontractors) are required to insert these contract provisions in each contract and subcontract, and further require that the clauses be included in all subcontracts;

2. The contractor (or subcontractor) is required to incorporate applicable requirements of these contract provisions by reference for work done under any purchase orders, rental agreements and other agreements for supplies or services;

3. The contractor is responsible for compliance with these contract provisions by any subcontractor, lower-tier subcontractor or service provider; and

4. The contractor (or subcontractor) shall not modify the provisions.

Subject to the applicability criteria noted in the specific contract provisions, these contract provisions apply to all work performed on the contract.

B. FAILURE TO COMPLY

Failure to comply with the terms of these contract provisions may be sufficient grounds to:

1. Withhold progress payments or final payment,

2. Terminate the contract,

3. Seek suspension/debarment, or

4. Any other action determined to be appropriate by the Airport Sponsor or the FAA.

C. CONTRACT PROVISIONS

1. **ACCESS TO RECORDS AND REPORTS (all AIP-funded projects)**

The Contractor must maintain an acceptable cost accounting system. The Contractor agrees to provide the Sponsor, the Federal Aviation

Administration, and the Comptroller General of the United States or any of their duly authorized representatives access to any books, documents, papers, and records of the Contractor which are directly pertinent to the specific contract for the purpose of making audit, examination, excerpts and transcriptions. The Contractor agrees to maintain all books, records and reports required under this contract for a period of not less than three years after the final payment is made and all pending matters are closed.

2. **BREACH OF CONTRACT TERMS (all AIP-funded projects) (all contracts that exceed the simplified acquisition threshold as fixed at 41 USC 403(11). This threshold is presently set at $100,000.)**

Any violation or breach of terms of this contract on the part of the contractor or its subcontractors may result in the suspension or termination of this contract or such other action that may be necessary to enforce the rights of the parties of this agreement.

Owner will provide *Contractor* written notice that describes the nature of the breach and corrective actions the *Contractor* must undertake in order to avoid termination of the contract. Owner reserves the right to withhold payments to Contractor until such time the Contractor corrects the breach or the Owner elects to terminate the contract. The Owner's notice will identify a specific date by which the *Contractor* must correct the breach. Owner may proceed with termination of the contract if the *Contractor* fails to correct the breach by deadline indicated in the Owner's notice.

The duties and obligations imposed by the Contract Documents and the rights and remedies available thereunder are in addition to, and not a limitation of, any duties, obligations, rights and remedies otherwise imposed or available by law.

3. **BUY AMERICAN PREFERENCES (all AIP-funded projects)**

BUY AMERICAN CERTIFICATION

The contractor agrees to comply with 49 USC § 50101, which provides that Federal funds may not be obligated unless all steel and manufactured goods used in AIP funded projects are produced in the United States, unless the FAA has issued a waiver for the product; the product is listed as an Excepted Article, Material Or Supply in Federal Acquisition Regulation subpart 25.108; or is included in the FAA Nationwide Buy American Waivers Issued list.

A bidder or offeror must complete and submit the Buy America certification included herein with their bid or offer. The Owner will reject as nonresponsive any bid or offer that does not include a completed Certificate of Buy American Compliance.

Type of Certification is based on Type of Project:

There are two types of Buy American certifications.

- For projects for a facility, the Certificate of Compliance Based on Total Facility (Terminal or Building Project) must be submitted.
- For all other projects, the Certificate of Compliance Based on Equipment and Materials Used on the Project (Non-building construction projects such as runway or roadway construction; or equipment acquisition projects) must be submitted.

*****

Certificate of Buy American Compliance for Total Facility

(Buildings such as Terminal, SRE, ARFF, etc.)

As a matter of bid responsiveness, the bidder or offeror must complete, sign, date, and submit this certification statement with their proposal. The bidder or offeror must indicate how they intend to comply with 49 USC § 50101 by selecting one of the following certification statements. These statements are mutually exclusive. Bidder must select one or the other (i.e. not both) by inserting a checkmark (✓) or the letter "X".

☐ Bidder or offeror hereby certifies that it will comply with 49 USC. 50101 by:

a. Only installing steel and manufactured products produced in the United States; or

b. Installing manufactured products for which the FAA has issued a waiver as indicated by inclusion on the current FAA Nationwide Buy American Waivers Issued listing; or

c. Installing products listed as an Excepted Article, Material or Supply in Federal Acquisition Regulation Subpart 25.108.

By selecting this certification statement, the bidder or offeror agrees:

1. To provide to the Owner evidence that documents the source and origin of the steel and manufactured product.

2. To faithfully comply with providing US domestic products

3. To refrain from seeking a waiver request after establishment of the contract, unless extenuating circumstances emerge that the FAA determines justified.

☐ The bidder or offeror hereby certifies it cannot comply with the 100% Buy American Preferences of 49 USC § 50101(a) but may qualify for either a Type 3 or Type 4 waiver under 49 USC § 50101(b). By selecting this certification statement, the apparent bidder or offeror with the apparent low bid agrees:

1. To the submit to the Owner within 15 calendar days of the bid opening, a formal waiver request and required documentation that support the type of waiver being requested.

2. That failure to submit the required documentation within the specified timeframe is cause for a non-responsive determination may results in rejection of the proposal.

3. To faithfully comply with providing US domestic products at or above the approved US domestic content percentage as approved by the FAA.

4. To furnish US domestic product for any waiver request that the FAA rejects.

5. To refrain from seeking a waiver request after establishment of the contract, unless extenuating circumstances emerge that the FAA determines justified.

Required Documentation

Type 3 Waiver - The cost of components and subcomponents produced in the United States is more that 60% of the cost of all components and subcomponents of the "facility". The required documentation for a type 3 waiver is:

a. Listing of all manufactured products that are not comprised of 100% US domestic content (Excludes products listed on the FAA Nationwide Buy American Waivers Issued listing and products excluded by Federal Acquisition Regulation Subpart 25.108; products of unknown origin must be considered as non-domestic products in their entirety)
b. Cost of non-domestic components and subcomponents, excluding labor costs associated with final assembly and installation at project location.
c. Percentage of non-domestic component and subcomponent cost as compared to total "facility" component and subcomponent costs, excluding labor costs associated with final assembly and installation at project location.

Type 4 Waiver – Total cost of project using US domestic source product exceeds the total project cost using non-domestic product by 25%. The required documentation for a type 4 of waiver is:

a. Detailed cost information for total project using US domestic product
b. Detailed cost information for total project using non-domestic product

False Statements: Per 49 USC § 47126, this certification concerns a matter within the jurisdiction of the Federal Aviation Administration and the making of a false, fictitious or fraudulent certification may render the maker subject to prosecution under Title 18, United States Code.

Date	Signature
Company Name	Title

* * * * *

Certificate of Buy American Compliance for Manufactured Products

(Non-building construction projects, equipment acquisition projects)

As a matter of bid responsiveness, the bidder or offeror must complete, sign, date, and submit this certification statement with their proposal. The bidder or offeror must indicate how they intend to comply with 49 USC § 50101 by selecting one on the following certification statements. These statements are mutually exclusive. Bidder must select one or the other (not both) by inserting a checkmark (✓) or the letter "X".

☐ Bidder or offeror hereby certifies that it will comply with 49 USC § 50101 by:

a. Only installing steel and manufactured products produced in the United States, or;

b. Installing manufactured products for which the FAA has issued a waiver as indicated by inclusion on the current FAA Nationwide Buy American Waivers Issued listing, or;

c. Installing products listed as an Excepted Article, Material or Supply in Federal Acquisition Regulation Subpart 25.108.

By selecting this certification statement, the bidder or offeror agrees:

1. To provide to the Owner evidence that documents the source and origin of the steel and manufactured product.

2. To faithfully comply with providing US domestic product

3. To furnish US domestic product for any waiver request that the FAA rejects

4. To refrain from seeking a waiver request after establishment of the contract, unless extenuating circumstances emerge that the FAA determines justified.

☐ The bidder or offeror hereby certifies it cannot comply with the 100% Buy American Preferences of 49 USC § 50101(a) but may qualify for either a Type 3 or Type 4 waiver under 49 USC § 50101(b). By selecting this certification statement, the apparent bidder or offeror with the apparent low bid agrees:

1. To the submit to the Owner within 15 calendar days of the bid opening, a formal waiver request and required documentation that support the type of waiver being requested.

2. That failure to submit the required documentation within the specified timeframe is cause for a non-responsive determination may result in rejection of the proposal.

3. To faithfully comply with providing US domestic products at or above the approved US domestic content percentage as approved by the FAA.

4. To refrain from seeking a waiver request after establishment of the contract, unless extenuating circumstances emerge that the FAA determines justified.

Required Documentation

Type 3 Waiver - The cost of the item components and subcomponents produced in the United States is more that 60% of the cost of all components and subcomponents of the "item". The required documentation for a type 3 waiver is:

a. Listing of all product components and subcomponents that are not comprised of 100% US domestic content (Excludes products listed on the FAA Nationwide Buy American Waivers Issued listing and products excluded by Federal Acquisition Regulation Subpart 25.108; products of unknown origin must be considered as non-domestic products in their entirety)
b. Cost of non-domestic components and subcomponents, excluding labor costs associated with final assembly at place of manufacture.
c. Percentage of non-domestic component and subcomponent cost as compared to total "item" component and subcomponent costs, excluding labor costs associated with final assembly at place of manufacture.

Type 4 Waiver – Total cost of project using US domestic source product exceeds the total project cost using non-domestic product by 25%. The required documentation for a type 4 of waiver is:

a. Detailed cost information for total project using US domestic product
b. Detailed cost information for total project using non-domestic product

False Statements: Per 49 USC § 47126, this certification concerns a matter within the jurisdiction of the Federal Aviation Administration and the making of a false, fictitious or fraudulent certification may render the maker subject to prosecution under Title 18, United States Code.

Date	Signature
Company Name	Title

4. GENERAL CIVIL RIGHTS PROVISIONS (all contracts)

The contractor agrees that it will comply with pertinent statutes, Executive Orders and such rules as are promulgated to ensure that no person shall, on the grounds of race, creed, color, national origin, sex, age, or handicap be excluded from participating in any activity conducted with or benefiting from Federal assistance.

This provision binds the contractors from the bid solicitation period through the completion of the contract. This provision is in addition to that required of Title VI of the Civil Rights Act of 1964.

5. CIVIL RIGHTS-TITLE VI ASSURANCE (all projects)

Title VI Solicitation Notice:

The **City of El Paso**, in accordance with the provisions of Title VI of the Civil Rights Act of 1964 (78 Stat. 252, 42 U.S.C. §§ 2000d to 2000d-4) and the Regulations, hereby notifies all bidders that it will affirmatively ensure that any contract entered into pursuant to this advertisement, disadvantaged business enterprises will be afforded full and fair opportunity to submit bids in response to this invitation and will not be discriminated against on the grounds of race, color, or national origin in consideration for an award.

Compliance with Nondiscrimination Requirements

During the performance of this contract, the contractor, for itself, its assignees, and successors in interest (hereinafter referred to as the "contractor") agrees as follows:

1. **Compliance with Regulations:** The contractor (hereinafter includes consultants) will comply with the Title VI List of Pertinent Nondiscrimination Acts And Authorities, as they may be amended from time to time, which are herein incorporated by reference and made a part of this contract.

2. **Non-discrimination:** The contractor, with regard to the work performed by it during the contract, will not discriminate on the grounds of race, color, or national origin in the selection and retention of subcontractors, including procurements of materials and leases of equipment. The contractor will not participate directly or indirectly in the discrimination prohibited by the Nondiscrimination Acts and Authorities, including employment practices when the contract covers any activity, project, or program set forth in Appendix B of 49 CFR part 21.

3. **Solicitations for Subcontracts, Including Procurements of Materials and Equipment:** In all solicitations, either by competitive bidding, or negotiation made by the contractor for work to be performed under a subcontract, including procurements of materials, or leases of equipment, each potential subcontractor or supplier will be notified by the contractor of the contractor's obligations under this contract and the Nondiscrimination Acts And Authorities on the grounds of race, color, or national origin.

4. **Information and Reports:** The contractor will provide all information and reports required by the Acts, the Regulations, and directives issued pursuant thereto and will permit access to its books, records, accounts, other sources of information, and its facilities as may be determined by the sponsor or the Federal Aviation Administration to be pertinent to ascertain compliance with

such Nondiscrimination Acts And Authorities and instructions. Where any information required of a contractor is in the exclusive possession of another who fails or refuses to furnish the information, the contractor will so certify to the sponsor or the Federal Aviation Administration, as appropriate, and will set forth what efforts it has made to obtain the information.

5. **Sanctions for Noncompliance:** In the event of a contractor's noncompliance with the Non-discrimination provisions of this contract, the sponsor will impose such contract sanctions as it or the Federal Aviation Administration may determine to be appropriate, including, but not limited to:

a. Withholding payments to the contractor under the contract until the contractor complies; and/or

b. Cancelling, terminating, or suspending a contract, in whole or in part.

6. **Incorporation of Provisions:** The contractor will include the provisions of paragraphs one through six in every subcontract, including procurements of materials and leases of equipment, unless exempt by the Acts, the Regulations and directives issued pursuant thereto. The contractor will take action with respect to any subcontract or procurement as the sponsor or the Federal Aviation Administration may direct as a means of enforcing such provisions including sanctions for noncompliance. Provided, that if the contractor becomes involved in, or is threatened with litigation by a subcontractor, or supplier because of such direction, the contractor may request the sponsor to enter into any litigation to protect the interests of the sponsor. In addition, the contractor may request the United States to enter into the litigation to protect the interests of the United States.

Title VI List of Pertinent Nondiscrimination Acts and Authorities

During the performance of this contract, the contractor, for itself, its assignees, and successors in interest (hereinafter referred to as the "contractor") agrees to comply with the following non-discrimination statutes and authorities; including but not limited to:

☐ Title VI of the Civil Rights Act of 1964 (42 U.S.C. § 2000d *et seq*., 78 stat. 252), (prohibits discrimination on the basis of race, color, national origin);

☐ 49 CFR part 21 (Non-discrimination In Federally-Assisted Programs of The Department of Transportation—Effectuation of Title VI of The Civil Rights Act of 1964);

☐ The Uniform Relocation Assistance and Real Property Acquisition Policies Act of 1970, (42 U.S.C. § 4601), (prohibits unfair treatment of persons displaced or whose property has been acquired because of Federal or Federal-aid programs and projects);

☐ Section 504 of the Rehabilitation Act of 1973, (29 U.S.C. § 794 *et seq*.), as amended, (prohibits discrimination on the basis of disability); and 49 CFR part 27;

☐ The Age Discrimination Act of 1975, as amended, (42 U.S.C. § 6101 *et seq*.), (prohibits discrimination on the basis of age);

☐ Airport and Airway Improvement Act of 1982, (49 USC § 471, Section 47123), as amended, (prohibits discrimination based on race, creed, color, national origin, or sex);

☐ The Civil Rights Restoration Act of 1987, (PL 100-209), (Broadened the scope, coverage and applicability of Title VI of the Civil Rights Act of 1964, The Age Discrimination Act of 1975 and Section 504 of the Rehabilitation Act of 1973, by expanding the definition of the terms "programs or activities" to include all of the programs or activities of the Federal-aid recipients, sub-recipients and contractors, whether such programs or activities are Federally funded or not);

☐ Titles II and III of the Americans with Disabilities Act of 1990, which prohibit discrimination on the basis of disability in the operation of public entities, public and private transportation systems,

places of public accommodation, and certain testing entities (42 U.S.C. §§ 12131 – 12189) as implemented by Department of Transportation regulations at 49 CFR parts 37 and 38;

☐ The Federal Aviation Administration's Non-discrimination statute (49 U.S.C. § 47123) (prohibits discrimination on the basis of race, color, national origin, and sex);

☐ Executive Order 12898, Federal Actions to Address Environmental Justice in Minority Populations and Low-Income Populations, which ensures non-discrimination against minority populations by discouraging programs, policies, and activities with disproportionately high and adverse human health or environmental effects on minority and low-income populations;

☐ Executive Order 13166, Improving Access to Services for Persons with Limited English Proficiency, and resulting agency guidance, national origin discrimination includes discrimination because of limited English proficiency (LEP). To ensure compliance with Title VI, you must take reasonable steps to ensure that LEP persons have meaningful access to your programs (70 Fed. Reg. at 74087 to 74100);

☐ Title IX of the Education Amendments of 1972, as amended, which prohibits you from discriminating because of sex in education programs or activities (20 U.S.C. 1681 et seq).

6. CLEAN AIR AND WATER POLLUTION CONTROL (all AIP funded contracts that exceed $150,000)

Contractor agrees to comply with all applicable standards, orders, and regulations issued pursuant to the Clean Air Act (42 U.S.C. § 740-7671q) and the Federal Water Pollution Control Act as amended (33 U.S.C. § 1251-1387). The Contractor agrees to report any violation to the Owner immediately upon discovery. The Owner assumes responsibility for notifying the Environmental Protection Agency (EPA) and the Federal Aviation Administration.
Contractor must include this requirement in all subcontracts that exceeds $150,000.

7. CONTRACT WORKHOURS AND SAFETY STANDARDS ACT REQUIREMENTS (all AIP funded contracts that exceed $100,000)

1. Overtime Requirements.

No contractor or subcontractor contracting for any part of the contract work which may require or involve the employment of laborers or mechanics shall require or permit any such laborer or mechanic, including watchmen and guards, in any workweek in which he or she is employed on such work to work in excess of forty hours in such workweek unless such laborer or mechanic receives compensation at a rate not less than one and one-half times the basic rate of pay for all hours worked in excess of forty hours in such workweek.

2. Violation; Liability for Unpaid Wages; Liquidated Damages.

In the event of any violation of the clause set forth in paragraph (1) of this clause, the contractor and any subcontractor responsible therefor shall be liable for the unpaid wages. In addition, such contractor and subcontractor shall be liable to the United States (in the case of work done under contract for the District of Columbia or a territory, to such District or to such territory), for liquidated damages. Such liquidated damages shall be computed with respect to each individual laborer or mechanic, including watchmen and guards, employed in violation of the clause set forth in paragraph (1) of this clause, in the sum of $10 for each calendar day on which such individual

was required or permitted to work in excess of the standard workweek of forty hours without payment of the overtime wages required by the clause set forth in paragraph (1) of this clause.

3. Withholding for Unpaid Wages and Liquidated Damages.

The Federal Aviation Administration (FAA) or the Owner shall upon its own action or upon written request of an authorized representative of the Department of Labor withhold or cause to be withheld, from any moneys payable on account of work performed by the contractor or subcontractor under any such contract or any other Federal contract with the same prime contractor, or any other Federally-assisted contract subject to the Contract Work Hours and Safety Standards Act, which is held by the same prime contractor, such sums as may be determined to be necessary to satisfy any liabilities of such contractor or subcontractor for unpaid wages and liquidated damages as provided in the clause set forth in paragraph 2 of this clause.

4. Subcontractors.

The contractor or subcontractor shall insert in any subcontracts the clauses set forth in paragraphs (1) through (4) and also a clause requiring the subcontractor to include these clauses in any lower tier subcontracts. The prime contractor shall be responsible for compliance by any subcontractor or lower tier subcontractor with the clauses set forth in paragraphs (1) through (4) of this clause.

8. CERTIFICATE REGARDING DEBARMENT AND SUSPENSION (BIDDER OR OFFEROR) (all AIP funded contracts that exceed $25,000)

CERTIFICATION OF OFFERER/BIDDER REGARDING DEBARMENT

By submitting a bid/proposal under this solicitation, the bidder or offeror certifies that neither it nor its principals are presently debarred or suspended by any Federal department or agency from participation in this transaction.

CERTIFICATION OF LOWER TIER CONTRACTORS REGARDING DEBARMENT

The successful bidder, by administering each lower tier subcontract that exceeds $25,000 as a "covered transaction", must verify each lower tier participant of a "covered transaction" under the project is not presently debarred or otherwise disqualified from participation in this federally assisted project. The successful bidder will accomplish this by:

1. Checking the System for Award Management at website: http://www.sam.gov
2. Collecting a certification statement similar to the Certificate Regarding Debarment and Suspension (Bidder or Offeror), above.
3. Inserting a clause or condition in the covered transaction with the lower tier contract

If the FAA later determines that a lower tier participant failed to disclose to a higher tier participant that it was excluded or disqualified at the time it entered the covered transaction, the FAA may pursue any available remedies, including suspension and debarment of the non-compliant participant.

9. DISADVANTAGED BUSINESS ENTERPRISES (all AIP-funded projects)

Solicitation Language

The Owner's award of this contract is conditioned upon Bidder or Offeror satisfying the good faith effort requirements of 49 CFR §26.53.

As a condition of bid responsiveness, the Bidder or Offeror must submit the following information with their proposal on the forms provided herein:
(1) The names and addresses of Disadvantaged Business Enterprise (DBE) firms that will participate in the contract;

(2) A description of the work that each DBE firm will perform;

(3) The dollar amount of the participation of each DBE firm listed under (1)

(4) Written statement from Bidder or Offeror that attests their commitment to use the DBE firm(s) listed under (1) to meet the Owner's project goal;

(5) If Bidder or Offeror cannot meet the advertised project DBE goal; evidence of good faith efforts undertaken by the Bidder or Offeror as described in appendix A to 49 CFR Part 26.

The successful Bidder or Offeror must provide written confirmation of participation from each of the DBE firms the Bidder or Offeror lists in their commitment. This Bidder or Offeror must submit the DBE's written confirmation of participation ["within 5 days of receiving the Owners notice of award" or "with the proposal documents as a condition of bid responsiveness"]

DISADVANTAGED BUSINESS ENTERPRISES

Contract Assurance (§ 26.13) - The contractor or subcontractor shall not discriminate on the basis of race, color, national origin, or sex in the performance of this contract. The contractor shall carry out applicable requirements of 49 CFR Part 26 in the award and administration of DOT assisted contracts. Failure by the contractor to carry out these requirements is a material breach of this contract, which may result in the termination of this contract or such other remedy, as the recipient deems appropriate.

Prompt Payment (§26.29) - The prime contractor agrees to pay each subcontractor under this prime contract for satisfactory performance of its contract no later than ten (10) days from the receipt of each payment the prime contractor receives from Contractor. The prime contractor agrees further to return retainage payments to each subcontractor within ten (10) days after the subcontractor's work is satisfactorily completed. Any delay or postponement of payment from the above referenced time frame may occur only for good cause following written approval of the Contractor. This clause applies to both DBE and non-DBE subcontractors.

The requirements of 49 CFR part 26 apply to this contract. It is the policy of the City of El Paso to practice nondiscrimination based on race, color, sex or national origin in the award or performance of this contract. The Owner encourages participation by all firms qualifying under this solicitation regardless of business size or ownership.

10. FEDERAL FAIR LABOR STANDARDS ACT (FEDERAL MINIMUM WAGE) (all contracts)

All contracts and subcontracts that result from this solicitation incorporate by reference the provisions of 29 CFR part 201, the Federal Fair Labor Standards Act (FLSA), with the same force and effect as if given in full text. The FLSA sets minimum wage, overtime pay, recordkeeping, and child labor standards for full and part time workers.

The *contractor* has full responsibility to monitor compliance to the referenced statute or regulation. The *consultant* must address any claims or disputes that arise from this requirement directly with the U.S. Department of Labor – Wage and Hour Division

11. LOBBYING AND INFLUENCING FEDERAL EMPLOYEES (all AIP-funded Projects over $100,000)

The bidder or offeror certifies by signing and submitting this bid or proposal, to the best of his or her knowledge and belief, that:

(1) No Federal appropriated funds have been paid or will be paid, by or on behalf of the Bidder or Offeror, to any person for influencing or attempting to influence an officer or employee of an agency, a Member of Congress, an officer or employee of Congress, or an employee of a Member of Congress in connection with the awarding of any Federal contract, the making of any Federal grant, the making of any Federal loan, the entering into of any cooperative agreement, and the extension, continuation, renewal, amendment, or modification of any Federal contract, grant, loan, or cooperative agreement.

(2) If any funds other than Federal appropriated funds have been paid or will be paid to any person for influencing or attempting to influence an officer or employee of any agency, a Member of Congress, an officer or employee of Congress, or an employee of a Member of Congress in connection with this Federal contract, grant, loan, or cooperative agreement, the undersigned shall complete and submit Standard Form-LLL, "Disclosure Form to Report Lobbying," in accordance with its instructions.

(3) The undersigned shall require that the language of this certification be included in the award documents for all sub-awards at all tiers (including subcontracts, sub-grants, and contracts under grants, loans, and cooperative agreements) and that all sub-recipients shall certify and disclose accordingly.

This certification is a material representation of fact upon which reliance was placed when this transaction was made or entered into. Submission of this certification is a prerequisite for making or entering into this transaction imposed by section 1352, title 31, U.S. Code. Any person who fails to file the required certification shall be subject to a civil penalty of not less than $10,000 and not more than $100,000 for each such failure.

12. OCCUPATIONAL SAFETY AND HEALTH ACT OF 1970 (all contracts)

All contracts and subcontracts that result from this solicitation incorporate by reference the requirements of 29 CFR Part 1910 with the same force and effect as if given in full text. Contractor must provide a work environment that is free from recognized hazards that may cause death or serious physical harm to the employee. The Contractor retains full responsibility to monitor its compliance and their subcontractor's compliance with the applicable requirements of the Occupational Safety and Health Act of 1970 (20 CFR Part 1910). Contractor must address any claims or disputes that pertain to a referenced requirement directly with the U.S. Department of Labor – Occupational Safety and Health Administration.

13. TERMINATION OF CONTRACT (contracts AIP funded projects that exceed $10,000)

Termination for Convenience (Construction Services)

The Owner may terminate this contract in whole or in part at any time by providing written notice to the Contractor. Such action may be without cause and without prejudice to any other right or remedy of Owner. Upon receipt of a written notice of termination, except as explicitly directed by the Owner, the Contractor shall immediately proceed with the following obligations regardless of

any delay in determining or adjusting amounts due under this clause:

1. Contractor must immediately discontinue work as specified in the written notice.
2. Terminate all subcontracts to the extent they relate to the work terminated under the notice.
3. Discontinue orders for materials and services except as directed by the written notice.
4. Deliver to the owner all fabricated and partially fabricated parts, completed and partially completed work, supplies, equipment and materials acquired prior to termination of the work and as directed in the written notice.
5. Complete performance of the work not terminated by the notice.
6. Take action as directed by the owner to protect and preserve property and work related to this contract that Owner will take possession.

Owner agrees to pay Contractor for:

6. a) completed and acceptable work executed in accordance with the contract documents prior to the effective date of termination;
7. b) documented expenses sustained prior to the effective date of termination in performing work and furnishing labor, materials, or equipment as required by the contract documents in connection with uncompleted work;
8. c) reasonable and substantiated claims, costs and damages incurred in settlement of terminated contracts with Subcontractors and Suppliers; and
9. d) reasonable and substantiated expenses to the contractor directly attributable to Owner's termination action

Owner will not pay Contractor for loss of anticipated profits or revenue or other economic loss arising out of or resulting from the Owner's termination action.

The rights and remedies this clause provides are in addition to any other rights and remedies provided by law or under this contract.

Termination for Default (Construction Services)

Section 80-09 of FAA Advisory Circular 150/5370-10 establishes conditions, rights and remedies associated with Owner termination of this contract due default of the Contractor.

14. <u>TRADE RESTRICTION CLAUSE</u> (all AIP-funded projects)

By submission of an offer, the Offeror certifies that with respect to this solicitation and any resultant contract, the Offeror -

a. is not owned or controlled by one or more citizens of a foreign country included in the list of countries that discriminate against U.S. firms as published by the Office of the United States Trade Representative (U.S.T.R.);

b. has not knowingly entered into any contract or subcontract for this project with a person that is a citizen or national of a foreign country included on the list of countries that discriminate against U.S. firms as published by the U.S.T.R; and

c. has not entered into any subcontract for any product to be used on the Federal on the project that is produced in a foreign country included on the list of countries that discriminate against U.S. firms published by the U.S.T.R.

This certification concerns a matter within the jurisdiction of an agency of the United States of America and the making of a false, fictitious, or fraudulent certification may render the maker subject to prosecution under Title 18, United States Code, Section 1001.

The Offeror/Contractor must provide immediate written notice to the Owner if the Offeror/Contractor learns that its certification or that of a subcontractor was erroneous when submitted or has become erroneous by reason of changed circumstances. The Contractor must

require subcontractors provide immediate written notice to the Contractor if at any time it learns that its certification was erroneous by reason of changed circumstances.

Unless the restrictions of this clause are waived by the Secretary of Transportation in accordance with 49 CFR 30.17, no contract shall be awarded to an Offeror or subcontractor:

(1) who is owned or controlled by one or more citizens or nationals of a foreign country included on the list of countries that discriminate against U.S. firms published by the U.S.T.R. or

(2) whose subcontractors are owned or controlled by one or more citizens or nationals of a foreign country on such U.S.T.R. list or

(3) who incorporates in the public works project any product of a foreign country on such U.S.T.R. list;

Nothing contained in the foregoing shall be construed to require establishment of a system of records in order to render, in good faith, the certification required by this provision. The knowledge and information of a contractor is not required to exceed that which is normally possessed by a prudent person in the ordinary course of business dealings.

The Offeror agrees that, if awarded a contract resulting from this solicitation, it will incorporate this provision for certification without modification in in all lower tier subcontracts. The contractor may rely on the certification of a prospective subcontractor that it is not a firm from a foreign country included on the list of countries that discriminate against U.S. firms as published by U.S.T.R, unless the Offeror has knowledge that the certification is erroneous.

This certification is a material representation of fact upon which reliance was placed when making an award. If it is later determined that the Contractor or subcontractor knowingly rendered an erroneous certification, the Federal Aviation Administration may direct through the Owner cancellation of the contract or subcontract for default at no cost to the Owner or the FAA.

15. AFFIRMATIVE ACTION REQUIREMENT (all AIP-funded Projects over $10,000)

NOTICE OF REQUIREMENT FOR AFFIRMATIVE ACTION to ENSURE EQUAL EMPLOYMENT OPPORTUNITY

1. The Offeror's or Bidder’s attention is called to the "Equal Opportunity Clause" and the "Standard Federal Equal Employment Opportunity Construction Contract Specifications" set forth herein.
2. The goals and timetables for minority and female participation, expressed in percentage terms for the contractor's aggregate workforce in each trade on all construction work in the covered area, are as follows:

Timetables

Goals for minority participation for each trade: **57.8%**

Goals for female participation in each trade: 6.9%

These goals are applicable to all of the contractor's construction work (whether or not it is Federal or federally-assisted) performed in the covered area. If the contractor performs construction work in a geographical area located outside of the covered area, it shall apply the goals established for such geographical area where the work is actually performed. With regard to this second area, the contractor also is subject to the goals for both its federally involved and non-federally involved construction.

The Contractor's compliance with the Executive Order and the regulations in 41 CFR Part 60-4 shall be based on its implementation of the Equal Opportunity Clause, specific affirmative action obligations required by the specifications set forth in 41 CFR 60-4.3(a), and its efforts to meet the

goals. The hours of minority and female employment and training must be substantially uniform throughout the length of the contract, and in each trade, and the contractor shall make a good faith effort to employ minorities and women evenly on each of its projects. The transfer of minority or female employees or trainees from Contractor to Contractor or from project to project for the sole purpose of meeting the Contractor's goals shall be a violation of the contract, the Executive Order and the regulations in 41 CFR Part 60-4. Compliance with the goals will be measured against the total work hours performed.

3. The Contractor shall provide written notification to the Director of the Office of Federal Contract Compliance Programs (OFCCP) within 10 working days of award of any construction subcontract in excess of $10,000 at any tier for construction work under the contract resulting from this solicitation. The notification shall list the name, address, and telephone number of the subcontractor; employer identification number of the subcontractor; estimated dollar amount of the subcontract; estimated starting and completion dates of the subcontract; and the geographical area in which the subcontract is to be performed.

4. As used in this notice and in the contract resulting from this solicitation, the "covered area" is **Texas, El Paso County, City of El Paso.**

16. COPELAND "ANTI-KICKBACK" ACT (all AIP-funded projects over $2,000)

Contractor must comply with the requirements of the Copeland "Anti-Kickback" Act (18 U.S.C. 874 and 40 U.S.C. 3145), as supplemented by Department of Labor regulation 29 CFR part 3. Contractor and subcontractors are prohibited from inducing, by any means, any person employed on the project to give up any part of the compensation to which the employee is entitled. The Contractor and each Subcontractor must submit to the Owner, a weekly statement on the wages paid to each employee performing on covered work during the prior week. Owner must report any violations of the Act to the Federal Aviation Administration.

17. DAVIS-BACON REQUIREMENTS (all AIP-funded projects over $2,000)

1. Minimum Wages
(i) All laborers and mechanics employed or working upon the site of the work will be paid unconditionally and not less often than once a week, and without subsequent deduction or rebate on any account (except such payroll deductions as are permitted by the Secretary of Labor under the Copeland Act (29 CFR Part 3)), the full amount of wages and bona fide fringe benefits (or cash equivalent thereof) due at time of payment computed at rates not less than those contained in the wage determination of the Secretary of Labor which is attached hereto and made a part hereof, regardless of any contractual relationship which may be alleged to exist between the contractor and such laborers and mechanics.

Contributions made or costs reasonably anticipated for bona fide fringe benefits under section 1(b)(2) of the Davis-Bacon Act on behalf of laborers or mechanics are considered wages paid to such laborers or mechanics, subject to the provisions of paragraph (1)(iv) of this section; also, regular contributions made or costs incurred for more than a weekly period (but not less often than quarterly) under plans, funds, or programs which cover the particular weekly period, are deemed to be constructively made or incurred during such weekly period. Such laborers and mechanics shall be paid the appropriate wage rate and fringe benefits on the wage determination for the classification of work actually performed, without regard to skill, except as provided in 29 CFR Part 5.5(a)(4). Laborers or mechanics performing work in more than one classification may be

compensated at the rate specified for each classification for the time actually worked therein: *Provided*, that the employer's payroll records accurately set forth the time spent in each classification in which work is performed. The wage determination (including any additional classification and wage rates conformed under (1)(ii) of this section) and the Davis-Bacon poster (WH-1321) shall be posted at all times by the contractor and its subcontractors at the site of the work in a prominent and accessible place where it can easily be seen by the workers.

(ii)(A) The contracting officer shall require that any class of laborers or mechanics, including helpers, which is not listed in the wage determination and which is to be employed under the contract shall be classified in conformance with the wage determination. The contracting officer shall approve an additional classification and wage rate and fringe benefits therefore only when the following criteria have been met:

> (1) The work to be performed by the classification requested is not performed by a classification in the wage determination; and
> (2) The classification is utilized in the area by the construction industry; and
> (3) The proposed wage rate, including any bona fide fringe benefits, bears a reasonable relationship to the wage rates contained in the wage determination.

(B) If the contractor and the laborers and mechanics to be employed in the classification (if known), or their representatives, and the contracting officer agree on the classification and wage rate (including the amount designated for fringe benefits where appropriate), a report of the action taken shall be sent by the contracting officer to the Administrator of the Wage and Hour Division, Employment Standards Administration, U.S. Department of Labor, Washington, D.C. 20210. The Administrator, or an authorized representative, will approve, modify, or disapprove every additional classification action within 30 days of receipt and so advise the contracting officer or will notify the contracting officer within the 30-day period that additional time is necessary.

(C) In the event the contractor, the laborers or mechanics to be employed in the classification or their representatives, and the contracting officer do not agree on the proposed classification and wage rate (including the amount designated for fringe benefits where appropriate), the contracting officer shall refer the questions, including the views of all interested parties and the recommendation of the contracting officer, to the Administrator for determination. The Administrator, or an authorized representative, will issue a determination within 30 days of receipt and so advise the contracting officer or will notify the contracting officer within the 30-day period that additional time is necessary.
(D) The wage rate (including fringe benefits where appropriate) determined pursuant to subparagraphs (1)(ii) (B) or (C) of this paragraph, shall be paid to all workers performing work in the classification under this contract from the first day on which work is performed in the classification.

(iii) Whenever the minimum wage rate prescribed in the contract for a class of laborers or mechanics includes a fringe benefit which is not expressed as an hourly rate, the contractor shall either pay the benefit as stated in the wage determination or shall pay another bona fide fringe benefit or an hourly cash equivalent thereof.

(iv) If the contractor does not make payments to a trustee or other third person, the contractor may consider as part of the wages of any laborer or mechanic the amount of any costs reasonably anticipated in providing bona fide fringe benefits under a plan or program, *Provided*, That the Secretary of Labor has found, upon the written request of the contractor, that the applicable standards of the Davis-Bacon Act have been met. The Secretary of Labor may require the contractor to set aside in a separate account assets for the meeting of obligations under the plan or program.

2 Withholding.

The Federal Aviation Administration or the sponsor shall upon its own action or upon written request of an authorized representative of the Department of Labor withhold or cause to be withheld from the contractor under this contract or any other Federal contract with the same prime contractor, or any other Federally-assisted contract subject to Davis-Bacon prevailing wage requirements, which is held by the same prime contractor, so much of the accrued payments or advances as may be considered necessary to pay laborers and mechanics, including apprentices, trainees, and helpers, employed by the contractor or any subcontractor the full amount of wages required by the contract. In the event of failure to pay any laborer or mechanic, including any apprentice, trainee, or helper, employed or working on the site of work, all or part of the wages required by the contract, the Federal Aviation Administration may, after written notice to the contractor, sponsor, applicant, or owner, take such action as may be necessary to cause the suspension of any further payment, advance, or guarantee of funds until such violations have ceased.

3. Payrolls and basic records.

(i) Payrolls and basic records relating thereto shall be maintained by the contractor during the course of the work and preserved for a period of three years thereafter for all laborers and mechanics working at the site of the work. Such records shall contain the name, address, and social security number of each such worker, his or her correct classification, hourly rates of wages paid (including rates of contributions or costs anticipated for bona fide fringe benefits or cash equivalents thereof of the types described in 1(b)(2)(B) of the Davis-Bacon Act), daily and weekly number of hours worked, deductions made and actual wages paid. Whenever the Secretary of Labor has found under 29 CFR 5.5(a)(1)(iv) that the wages of any laborer or mechanic include the amount of any costs reasonably anticipated in providing benefits under a plan or program described in section 1(b)(2)(B) of the Davis-Bacon Act, the contractor shall maintain records which show that the commitment to provide such benefits is enforceable, that the plan or program is financially responsible, and that the plan or program has been communicated in writing to the laborers or mechanics affected, and records which show the costs anticipated or the actual costs incurred in providing such benefits. Contractors employing apprentices or trainees under approved programs shall maintain written evidence of the registration of apprenticeship programs and certification of trainee programs, the registration of the apprentices and trainees, and the ratios and wage rates prescribed in the applicable programs.

(ii)(A) The contractor shall submit weekly for each week in which any contract work is performed a copy of all payrolls to the Federal Aviation Administration if the agency is a party to the contract, but if the agency is not such a party, the contractor will submit the payrolls to the applicant, sponsor, or owner, as the case may be, for transmission to the Federal Aviation Administration. The payrolls submitted shall set out accurately and completely all of the information required to be maintained under 29 CFR 5.5(a)(3)(i), except that full social security numbers and home addresses shall not be included on weekly transmittals. Instead the payrolls shall only need to include an individually identifying number for each employee (*e.g.* , the last four digits of the employee's social security number). The required weekly payroll information may be submitted in any form desired. Optional Form WH–347 is available for this purpose from the Wage and Hour Division Web site at *http://www.dol.gov/esa/whd/forms/wh347instr.htm* or its successor site. The prime contractor is responsible for the submission of copies of payrolls by all subcontractors. Contractors and subcontractors shall maintain the full social security number and current address of each covered worker, and shall provide them upon request to the Federal Aviation Administration if the agency is a party to the contract, but if the agency is not such a party, the contractor will submit them to the applicant, sponsor, or owner, as the case may be, for transmission to the Federal Aviation Administration, the contractor, or the Wage and Hour Division of the Department of Labor for purposes of an investigation or audit of compliance with prevailing wage requirements. It is not a

violation of this section for a prime contractor to require a subcontractor to provide addresses and social security numbers to the prime contractor for its own records, without weekly submission to the sponsoring government agency (or the applicant, sponsor, or owner).

(B) Each payroll submitted shall be accompanied by a "Statement of Compliance," signed by the contractor or subcontractor or his or her agent who pays or supervises the payment of the persons employed under the contract and shall certify the following:

(1) That the payroll for the payroll period contains the information required to be provided under 29 CFR § 5.5(a)(3)(ii), the appropriate information is being maintained under 29 CFR § 5.5 (a)(3)(i) and that such information is correct and complete;

(2) That each laborer and mechanic (including each helper, apprentice and trainee) employed on the contract during the payroll period has been paid the full weekly wages earned, without rebate, either directly or indirectly, and that no deductions have been made either directly or indirectly from the full wages earned, other than permissible deductions as set forth in Regulations 29 CFR Part 3;

(3) That each laborer or mechanic has been paid not less than the applicable wage rates and fringe benefits or cash equivalents for the classification of work performed, as specified in the applicable wage determination incorporated into the contract.

(C) The weekly submission of a properly executed certification set forth on the reverse side of Optional Form WH-347 shall satisfy the requirement for submission of the "Statement of Compliance" required by paragraph (3)(ii)(B) of this section.

(D) The falsification of any of the above certifications may subject the contractor or subcontractor to civil or criminal prosecution under Section 1001 of Title 18 and Section 231 of Title 31 of the United States Code.

(iii) The contractor or subcontractor shall make the records required under paragraph (3)(i) of this section available for inspection, copying or transcription by authorized representatives of the sponsor, the Federal Aviation Administration or the Department of Labor, and shall permit such representatives to interview employees during working hours on the job. If the contractor or subcontractor fails to submit the required records or to make them available, the Federal agency may, after written notice to the contractor, sponsor, applicant or owner, take such action as may be necessary to cause the suspension of any further payment, advance, or guarantee of funds. Furthermore, failure to submit the required records upon request or to make such records available may be grounds for debarment action pursuant to 29 CFR 5.12.

4. Apprentices and Trainees.

(i) Apprentices. Apprentices will be permitted to work at less than the predetermined rate for the work they performed when they are employed pursuant to and individually registered in a bona fide apprenticeship program registered with the U.S. Department of Labor, Employment and Training Administration, Bureau of Apprenticeship and Training, or with a State Apprenticeship Agency recognized by the Bureau, or if a person is employed in his or her first 90 days of probationary employment as an apprentice in such an apprenticeship program, who is not individually registered in the program, but who has been certified by the Bureau of Apprenticeship and Training or a State Apprenticeship Agency (where appropriate) to be eligible for probationary employment as an apprentice. The allowable ratio of apprentices to journeymen on the job site in any craft classification shall not be greater than the ratio permitted to the contractor as to the entire work force under the registered program. Any worker listed on a payroll at an apprentice wage rate, who is not registered or otherwise employed as stated above, shall be paid not less than the applicable

wage rate on the wage determination for the classification of work actually performed. In addition, any apprentice performing work on the job site in excess of the ratio permitted under the registered program shall be paid not less than the applicable wage rate on the wage determination for the work actually performed. Where a contractor is performing construction on a project in a locality other than that in which its program is registered, the ratios and wage rates (expressed in percentages of the journeyman's hourly rate) specified in the contractor's or subcontractor's registered program shall be observed. Every apprentice must be paid at not less than the rate specified in the registered program for the apprentice's level of progress, expressed as a percentage of the journeymen hourly rate specified in the applicable wage determination. Apprentices shall be paid fringe benefits in accordance with the provisions of the apprenticeship program. If the apprenticeship program does not specify fringe benefits, apprentices must be paid the full amount of fringe benefits listed on the wage determination for the applicable classification. If the Administrator determines that a different practice prevails for the applicable apprentice classification, fringes shall be paid in accordance with that determination. In the event the Bureau of Apprenticeship and Training, or a State Apprenticeship Agency recognized by the Bureau, withdraws approval of an apprenticeship program, the contractor will no longer be permitted to utilize apprentices at less than the applicable predetermined rate for the work performed until an acceptable program is approved.

(ii) Trainees. Except as provided in 29 CFR 5.16, trainees will not be permitted to work at less than the predetermined rate for the work performed unless they are employed pursuant to and individually registered in a program which has received prior approval, evidenced by formal certification by the U.S. Department of Labor, Employment and Training Administration. The ratio of trainees to journeymen on the job site shall not be greater than permitted under the plan approved by the Employment and Training Administration. Every trainee must be paid at not less than the rate specified in the approved program for the trainee's level of progress, expressed as a percentage of the journeyman hourly rate specified in the applicable wage determination. Trainees shall be paid fringe benefits in accordance with the provisions of the trainee program. If the trainee program does not mention fringe benefits, trainees shall be paid the full amount of fringe benefits listed on the wage determination unless the Administrator of the Wage and Hour Division determines that there is an apprenticeship program associated with the corresponding journeyman wage rate on the wage determination which provides for less than full fringe benefits for apprentices. Any employee listed on the payroll at a trainee rate that is not registered and participating in a training plan approved by the Employment and Training Administration shall be paid not less than the applicable wage rate on the wage determination for the classification of work actually performed. In addition, any trainee performing work on the job site in excess of the ratio permitted under the registered program shall be paid not less than the applicable wage rate on the wage determination for the work actually performed. In the event the Employment and Training Administration withdraws approval of a training program, the contractor will no longer be permitted to utilize trainees at less than the applicable predetermined rate for the work performed until an acceptable program is approved.
(iii) Equal Employment Opportunity. The utilization of apprentices, trainees and journeymen under this part shall be in conformity with the equal employment opportunity requirements of Executive Order 11246, as amended, and 29 CFR Part 30.

5. Compliance with Copeland Act Requirements.

The contractor shall comply with the requirements of 29 CFR Part 3, which are incorporated by reference in this contract.
6. Subcontracts.

The contractor or subcontractor shall insert in any subcontracts the clauses contained in 29 CFR Part 5.5(a)(1) through (10) and such other clauses as the Federal Aviation Administration may by appropriate instructions require, and also a clause requiring the subcontractors to include these

clauses in any lower tier subcontracts. The prime contractor shall be responsible for the compliance by any subcontractor or lower tier subcontractor with all the contract clauses in 29 CFR Part 5.5.

7. Contract Termination: Debarment.

A breach of the contract clauses in paragraph 1 through 10 of this section may be grounds for termination of the contract, and for debarment as a contractor and a subcontractor as provided in 29 CFR 5.12.

8. Compliance With Davis-Bacon and Related Act Requirements.

All rulings and interpretations of the Davis-Bacon and Related Acts contained in 29 CFR Parts 1, 3, and 5 are herein incorporated by reference in this contract.

9. Disputes Concerning Labor Standards.

Disputes arising out of the labor standards provisions of this contract shall not be subject to the general disputes clause of this contract. Such disputes shall be resolved in accordance with the procedures of the Department of Labor set forth in 29 CFR Parts 5, 6 and 7. Disputes within the meaning of this clause include disputes between the contractor (or any of its subcontractors) and the contracting agency, the U.S. Department of Labor, or the employees or their representatives.

10. Certification of Eligibility.

(i) By entering into this contract, the contractor certifies that neither it (nor he or she) nor any person or firm who has an interest in the contractor's firm is a person or firm ineligible to be awarded Government contracts by virtue of section 3(a) of the Davis-Bacon Act or 29 CFR 5.12(a)(1).

(ii) No part of this contract shall be subcontracted to any person or firm ineligible for award of a Government contract by virtue of section 3(a) of the Davis-Bacon Act or 29 CFR 5.12(a)(1).

(iii) The penalty for making false statements is prescribed in the U.S. Criminal Code, 18 U.S.C. 1001.

18. DISTRACTED DRIVING (all AIP-funded Projects over $3,500)

TEXTING WHEN DRIVING

In accordance with Executive Order 13513, "Federal Leadership on Reducing Text Messaging While Driving" (10/1/2009) and DOT Order 3902.10 “Text Messaging While Driving” (12/30/2009), the FAA encourages recipients of Federal grant funds to adopt and enforce safety policies that decrease crashes by distracted drivers, including policies to ban text messaging while driving when performing work related to a grant or sub-grant.

In support of this initiative, the Owner encourages the Contractor to promote policies and initiatives for its employees and other work personnel that decrease crashes by distracted drivers, including policies that ban text messaging while driving motor vehicles while performing work activities associated with the project. The Contractor must include the substance of this clause in all sub-tier contracts exceeding $3,500 and involve driving a motor vehicle in performance of work activities associated with the project.

19. <u>ENERGY CONSERVATION REQUIREMENTS</u>(all AIP-funded Projects)

Contractor and Subcontractor agree to comply with mandatory standards and policies relating to energy efficiency as contained in the state energy conservation plan issued in compliance with the Energy Policy and Conservation Act (42 U.S.C. 6201*et seq*).

20. <u>EQUAL EMPLOYEMENT OPPORTUNITY (E.E.O.)</u> (all AIP-funded Projects over $10,000)

During the performance of this contract, the contractor agrees as follows:

(1) The contractor will not discriminate against any employee or applicant for employment because of race, color, religion, sex, or national origin. The contractor will take affirmative action to ensure that applicants are employed, and that employees are treated during employment without regard to their race, color, religion, sex, sexual orientation, gender identify or national origin. Such action shall include, but not be limited to the following: employment, upgrading, demotion, or transfer; recruitment or recruitment advertising; layoff or termination; rates of pay or other forms of compensation; and selection for training, including apprenticeship. The contractor agrees to post in conspicuous places, available to employees and applicants for employment, notices to be provided setting forth the provisions of this nondiscrimination clause.

(2) The contractor will, in all solicitations or advertisements for employees placed by or on behalf of the contractor, state that all qualified applicants will receive considerations for employment without regard to race, color, religion, sex, or national origin.

(3) The contractor will send to each labor union or representative of workers with which he has a collective bargaining agreement or other contract or understanding, a notice to be provided advising the said labor union or workers' representatives of the contractor's commitments under this section, and shall post copies of the notice in conspicuous places available to employees and applicants for employment.

(4) The contractor will comply with all provisions of Executive Order 11246 of September 24, 1965, and of the rules, regulations, and relevant orders of the Secretary of Labor.

(5) The contractor will furnish all information and reports required by Executive Order 11246 of September 24, 1965, and by rules, regulations, and orders of the Secretary of Labor, or pursuant thereto, and will permit access to his books, records, and accounts by the administering agency and the Secretary of Labor for purposes of investigation to ascertain compliance with such rules, regulations, and orders.

(6) In the event of the contractor's noncompliance with the nondiscrimination clauses of this contract or with any of the said rules, regulations, or orders, this contract may be canceled, terminated, or suspended in whole or in part and the contractor may be declared ineligible for further Government contracts or federally assisted construction contracts in accordance with procedures authorized in Executive Order 11246 of September 24, 1965, and such other sanctions may be imposed and remedies invoked as provided in Executive Order 11246 of September 24, 1965, or by rule, regulation, or order of the Secretary of Labor, or as otherwise provided by law.

(7) The contractor will include the portion of the sentence immediately preceding paragraph (1) and the provisions of paragraphs (1) through (7) in every subcontract or purchase order unless exempted by rules, regulations, or orders of the Secretary of Labor issued pursuant to section 204 of Executive Order 11246 of September 24, 1965, so that such provisions will be binding upon each subcontractor or vendor. The contractor will take such action with respect to any subcontract or

purchase order as the administering agency may direct as a means of enforcing such provisions, including sanctions for noncompliance*: Provided, however*, That in the event a contractor becomes involved in, or is threatened with, litigation with a subcontractor or vendor as a result of such direction by the administering agency the contractor may request the United States to enter into such litigation to protect the interests of the United States.

A15.3.2 EEO Specification
STANDARD FEDERAL EQUAL EMPLOYMENT OPPORTUNITY CONSTRUCTION CONTRACT SPECIFICATIONS

1. As used in these specifications:

a. "Covered area" means the geographical area described in the solicitation from which this contract resulted;

b. "Director" means Director, Office of Federal Contract Compliance Programs (OFCCP), U.S. Department of Labor, or any person to whom the Director delegates authority;

c. "Employer identification number" means the Federal social security number used on the Employer's Quarterly Federal Tax Return, U.S. Treasury Department Form 941;

d. "Minority" includes:

(1) Black (all) persons having origins in any of the Black African racial groups not of Hispanic origin);

(2) Hispanic (all persons of Mexican, Puerto Rican, Cuban, Central or South American, or other Spanish culture or origin regardless of race);

(3) Asian and Pacific Islander (all persons having origins in any of the original peoples of the Far East, Southeast Asia, the Indian Subcontinent, or the Pacific Islands); and

(4) American Indian or Alaskan native (all persons having origins in any of the original peoples of North America and maintaining identifiable tribal affiliations through membership and participation or community identification).

2. Whenever the contractor, or any subcontractor at any tier, subcontracts a portion of the work involving any construction trade, it shall physically include in each subcontract in excess of $10,000 the provisions of these specifications and the Notice which contains the applicable goals for minority and female participation and which is set forth in the solicitations from which this contract resulted.

3. If the contractor is participating (pursuant to 41 CFR 60-4.5) in a Hometown Plan approved by the U.S. Department of Labor in the covered area either individually or through an association, its affirmative action obligations on all work in the Plan area (including goals and timetables) shall be in accordance with that Plan for those trades which have unions participating in the Plan. Contractors shall be able to demonstrate their participation in and compliance with the provisions of any such Hometown Plan. Each contractor or subcontractor participating in an approved plan is individually required to comply with its obligations under the EEO clause and to make a good faith effort to achieve each goal under the Plan in each trade in which it has employees. The overall good faith performance by other contractors or subcontractors toward a goal in an approved Plan does not excuse any covered contractor's or subcontractor's failure to take good faith efforts to achieve the Plan goals and timetables.

4. The contractor shall implement the specific affirmative action standards provided in paragraphs 7a through 7p of these specifications. The goals set forth in the solicitation from which this contract resulted are expressed as percentages of the total hours of employment and training of minority and female utilization the contractor should reasonably be able to achieve in each construction trade in which it has employees in the covered area. Covered construction contractors performing construction work in a geographical area where they do not have a Federal or federally assisted

construction contract shall apply the minority and female goals established for the geographical area where the work is being performed. Goals are published periodically in the Federal Register in notice form, and such notices may be obtained from any Office of Federal Contract Compliance Programs office or from Federal procurement contracting officers. The contractor is expected to make substantially uniform progress in meeting its goals in each craft during the period specified.

5. Neither the provisions of any collective bargaining agreement nor the failure by a union with whom the contractor has a collective bargaining agreement to refer either minorities or women shall excuse the contractor's obligations under these specifications, Executive Order 11246 or the regulations promulgated pursuant thereto.

6. In order for the non-working training hours of apprentices and trainees to be counted in meeting the goals, such apprentices and trainees shall be employed by the contractor during the training period and the contractor shall have made a commitment to employ the apprentices and trainees at the completion of their training, subject to the availability of employment opportunities. Trainees shall be trained pursuant to training programs approved by the U.S. Department of Labor.

7. The contractor shall take specific affirmative actions to ensure equal employment opportunity. The evaluation of the contractor's compliance with these specifications shall be based upon its effort to achieve maximum results from its actions. The contractor shall document these efforts fully and shall implement affirmative action steps at least as extensive as the following:

a. Ensure and maintain a working environment free of harassment, intimidation, and coercion at all sites, and in all facilities at which the contractor's employees are assigned to work. The contractor, where possible, will assign two or more women to each construction project. The contractor shall specifically ensure that all foremen, superintendents, and other onsite supervisory personnel are aware of and carry out the contractor's obligation to maintain such a working environment, with specific attention to minority or female individuals working at such sites or in such facilities.

b. Establish and maintain a current list of minority and female recruitment sources, provide written notification to minority and female recruitment sources and to community organizations when the contractor or its unions have employment opportunities available, and maintain a record of the organizations' responses.

c. Maintain a current file of the names, addresses, and telephone numbers of each minority and female off-the-street applicant and minority or female referral from a union, a recruitment source, or community organization and of what action was taken with respect to each such individual. If such individual was sent to the union hiring hall for referral and was not referred back to the contractor by the union or, if referred, not employed by the contractor, this shall be documented in the file with the reason therefore along with whatever additional actions the contractor may have taken.

d. Provide immediate written notification to the Director when the union or unions with which the contractor has a collective bargaining agreement has not referred to the contractor a minority person or female sent by the contractor, or when the contractor has other information that the union referral process has impeded the contractor's efforts to meet its obligations.

e. Develop on-the-job training opportunities and/or participate in training programs for the area which expressly include minorities and women, including upgrading programs and apprenticeship and trainee programs relevant to the contractor's employment needs, especially those programs funded or approved by the Department of Labor. The contractor shall provide notice of these programs to the sources compiled under 7b above.

f. Disseminate the contractor's EEO policy by providing notice of the policy to unions and training programs and requesting their cooperation in assisting the contractor in meeting its EEO obligations; by including it in any policy manual and collective bargaining agreement; by publicizing it in the company newspaper, annual report, etc.; by specific review of the

policy with all management personnel and with all minority and female employees at least once a year; and by posting the company EEO policy on bulletin boards accessible to all employees at each location where construction work is performed.

g. Review, at least annually, the company's EEO policy and affirmative action obligations under these specifications with all employees having any responsibility for hiring, assignment, layoff, termination, or other employment decisions including specific review of these items with onsite supervisory personnel such a superintendents, general foremen, etc., prior to the initiation of construction work at any job site. A written record shall be made and maintained identifying the time and place of these meetings, persons attending, subject matter discussed, and disposition of the subject matter.

h. Disseminate the contractor's EEO policy externally by including it in any advertising in the news media, specifically including minority and female news media, and providing written notification to and discussing the contractor's EEO policy with other contractors and subcontractors with whom the contractor does or anticipates doing business.

i. Direct its recruitment efforts, both oral and written, to minority, female, and community organizations, to schools with minority and female students; and to minority and female recruitment and training organizations serving the contractor's recruitment area and employment needs. Not later than one month prior to the date for the acceptance of applications for apprenticeship or other training by any recruitment source, the contractor shall send written notification to organizations, such as the above, describing the openings, screening procedures, and tests to be used in the selection process.

j. Encourage present minority and female employees to recruit other minority persons and women and, where reasonable, provide after school, summer, and vacation employment to minority and female youth both on the site and in other areas of a contractor's workforce.

k. Validate all tests and other selection requirements where there is an obligation to do so under 41 CFR Part 60-3.

l. Conduct, at least annually, an inventory and evaluation at least of all minority and female personnel, for promotional opportunities and encourage these employees to seek or to prepare for, through appropriate training, etc., such opportunities.

m. Ensure that seniority practices, job classifications, work assignments, and other personnel practices do not have a discriminatory effect by continually monitoring all personnel and employment related activities to ensure that the EEO policy and the contractor's obligations under these specifications are being carried out.

n. Ensure that all facilities and company activities are non-segregated except that separate or single user toilet and necessary changing facilities shall be provided to assure privacy between the sexes.

o. Document and maintain a record of all solicitations of offers for subcontracts from minority and female construction contractors and suppliers, including circulation of solicitations to minority and female contractor associations and other business associations.

p. Conduct a review, at least annually, of all supervisor's adherence to and performance under the contractor's EEO policies and affirmative action obligations.

8. Contractors are encouraged to participate in voluntary associations, which assist in fulfilling one or more of their affirmative action obligations (7a through 7p). The efforts of a contractor association, joint contractor union, contractor community, or other similar groups of which the contractor is a member and participant, may be asserted as fulfilling any one or more of its obligations under 7a through 7p of these specifications provided that the contractor actively participates in the group, makes every effort to assure that the group has a positive impact on the employment of minorities and women in the industry, ensures that the concrete benefits of the program are reflected in the contractor's minority and female workforce participation, makes a good faith effort to meet its individual goals and timetables, and can provide access to documentation which demonstrates the effectiveness of actions taken on behalf of the contractor. The obligation to

comply, however, is the contractor's and failure of such a group to fulfill an obligation shall not be a defense for the contractor's noncompliance.

9. A single goal for minorities and a separate single goal for women have been established. The contractor, however, is required to provide equal employment opportunity and to take affirmative action for all minority groups, both male and female, and all women, both minority and non-minority. Consequently, if the particular group is employed in a substantially disparate manner (for example, even though the contractor has achieved its goals for women generally,) the contractor may be in violation of the Executive Order if a specific minority group of women is underutilized.

10. The contractor shall not use the goals and timetables or affirmative action standards to discriminate against any person because of race, color, religion, sex, or national origin.

11. The contractor shall not enter into any subcontract with any person or firm debarred from Government contracts pursuant to Executive Order 11246.

12. The contractor shall carry out such sanctions and penalties for violation of these specifications and of the Equal Opportunity Clause, including suspension, termination, and cancellation of existing subcontracts as may be imposed or ordered pursuant to Executive Order 11246, as amended, and its implementing regulations, by the Office of Federal Contract Compliance Programs. Any contractor who fails to carry out such sanctions and penalties shall be in violation of these specifications and Executive Order 11246, as amended.

13. The contractor, in fulfilling its obligations under these specifications, shall implement specific affirmative action steps, at least as extensive as those standards prescribed in paragraph 7 of these specifications, so as to achieve maximum results from its efforts to ensure equal employment opportunity. If the contractor fails to comply with the requirements of the Executive Order, the implementing regulations, or these specifications, the Director shall proceed in accordance with 41 CFR 60-4.8.

14. The contractor shall designate a responsible official to monitor all employment related activity to ensure that the company EEO policy is being carried out, to submit reports relating to the provisions hereof as may be required by the Government, and to keep records. Records shall at least include for each employee, the name, address, telephone number, construction trade, union affiliation if any, employee identification number when assigned, social security number, race, sex, status (e.g., mechanic, apprentice, trainee, helper, or laborer), dates of changes in status, hours worked per week in the indicated trade, rate of pay, and locations at which the work was performed. Records shall be maintained in an easily understandable and retrievable form; however, to the degree that existing records satisfy this requirement, contractors shall not be required to maintain separate records.

15. Nothing herein provided shall be construed as a limitation upon the application of other laws which establish different standards of compliance or upon the application of requirements for the hiring of local or other area residents (e.g., those under the Public Works Employment Act of 1977 and the Community Development Block Grant Program).

21. PROHIBITION OF SEGRATED FACILITIES (E.E.O.) (all AIP-funded Projects over $10,000)

(a) The Contractor agrees that it does not and will not maintain or provide for its employees any segregated facilities at any of its establishments, and that it does not and will not permit its employees to perform their services at any location under its control where segregated facilities are

maintained. The Contractor agrees that a breach of this clause is a violation of the Equal Opportunity clause in this contract.

(b) "Segregated facilities," as used in this clause, means any waiting rooms, work areas, rest rooms and wash rooms, restaurants and other eating areas, time clocks, locker rooms and other storage or dressing areas, parking lots, drinking fountains, recreation or entertainment areas, transportation, and housing facilities provided for employees, that are segregated by explicit directive or are in fact segregated on the basis of race, color, religion, sex, or national origin because of written or oral policies or employee custom. The term does not include separate or single-user rest rooms or necessary dressing or sleeping areas provided to assure privacy between the sexes.

(c) The Contractor shall include this clause in every subcontract and purchase order that is subject to the Equal Opportunity clause of this contract.

22. PROCUREMENT OF RECOVERED MATERIALS (all AIP-funded Projects)

Contractor and subcontractor agree to comply with Section 6002 of the Solid Waste Disposal Act, as amended by the Resource Conservation and Recovery Act, and the regulatory provisions of 40 CFR Part 247. In the performance of this contract and to the extent practicable, the Contractor and subcontractors are to use of products containing the highest percentage of recovered materials for items designated by the Environmental Protection Agency (EPA) under 40 CFR Part 247 whenever:

a) The contract requires procurement of $10,000 or more of a designated item during the fiscal year; or,

b) The contractor has procured $10,000 or more of a designated item using Federal funding during the previous fiscal year.

The list of EPA-designated items is available at www.epa.gov/epawaste/conserve/tools/cpg/products/.

Section 6002(c) establishes exceptions to the preference for recovery of EPA-designated products if the contractor can demonstrate the item is:

a) Not reasonably available within a timeframe providing for compliance with the contract performance schedule;
b) Fails to meet reasonable contract performance requirements; or
c) Is only available at an unreasonable price.

23. SEISMIC SAFETY (all AIP-funded Projects that involve the construction of new buildings or structural addition to existing buildings.)

Seismic Safety
In the performance of design services, the Consultant agrees to furnish a building design and associated construction specification that conform to a building code standard which provides a level of seismic safety substantially equivalent to standards as established by the National Earthquake Hazards Reduction Program (NEHRP). Local building codes that model their building code after the current version of the International Building Code (IBC) meet the NEHRP equivalency level for seismic safety. At the conclusion of the design services, the Consultant agrees

to furnish the Owner a "certification of compliance" that attests conformance of the building design and the construction specifications with the seismic standards of NEHRP or an equivalent building code.

A22.3.2 Construction Contracts
Seismic Safety

The contractor agrees to ensure that all work performed under this contract, including work performed by subcontractors, conforms to a building code standard that provides a level of seismic safety substantially equivalent to standards established by the National Earthquake Hazards Reduction Program (NEHRP). Local building codes that model their code after the current version of the International Building Code (IBC) meet the NEHRP equivalency level for seismic safety.

24. VETERAN'S PREFERENCE (all AIP-funded Projects)

In the employment of labor (excluding executive, administrative, and supervisory positions), the contractor and all sub-tier contractors must give preference to covered veterans as defined within Title 49 United States Code Section 47112. Covered veterans include Vietnam-era veterans, Persian Gulf veterans, Afghanistan-Iraq war veterans, disabled veterans, and small business concerns (as defined by 15 U.S.C. 632) owned and controlled by disabled veterans. This preference only applies when there are covered veterans readily available and qualified to perform the work to which the employment relates.

EQUAL EMPLOYMENT OPPORTUNITY REQUIREMENTS

1. **GOALS:** The goals and timetables for minority and female participation, expressed in percentage terms for the contractor's aggregate workforce in each trade on all construction work in the covered area, are as follows:

Goal For Minority Participation For Each Trade	Goals For Female Participation For Each Trade
57.8%	6.9%

These goals are applicable to all the contractor's construction work, whether or not it is federal or federally assisted, performed in the covered area and are percentages of total hours of employment.

The contractor's compliance with the Executive Order and the regulations in 41 CFR Part 60-4 shall be based on its implementation of the Equal Opportunity Clause, specific affirmative action obligations required by the specifications set forth in 41 CFR 60-4.3(a), and its efforts to meet the goals established for the covered area. The hours of minority and female employment and training must be substantially uniform throughout the length of the contract, and in each trade, and the contractor shall make a good faith effort to employ minorities and women evenly on each of its projects. The transfer of minority or female employees or trainees from contractor to contractor or from project to project for the sole purpose of meeting the contractor's goals shall be a violation of the Contract, the Executive Order and the Regulations in 41 CFR Part 60-4. Compliance with the goals will be measured against the total work hours performed.

2. **NOTICE:** The contractor shall provide written notification to the Director of the Office of Federal Contract Compliance Programs within 10 working days of award of any construction subcontract in excess of $10,000 at any tier for construction work under the contract resulting from this solicitation. The notification shall list the name, address and telephone number of the subcontractor; employer identification number; estimated dollar amount of the subcontract; estimated starting and completion dates of the subcontract; and the geographical area in which the contract is to be performed.

3. **DEFINITIONS**, as used in these specifications:

   A. "Covered Area" means the geographical area described in the solicitation from which this contract resulted, El Paso County.

   B. "Director" means Director, Office of Federal Contract Compliance Programs, United States Department of Labor, or any person to whom the Director delegates authority.

   C. "Employer Identification Number" means the federal Social Security Number used on the employer's quarterly federal tax return, U.S. Treasury Department Form 941.

   D. "Minority" includes:

(i) Black (all persons having origin in any of the Black African racial groups not of Hispanic origin);

(ii) Hispanic (all persons of Mexican, Puerto Rican, Cuban, Central or South American or other Spanish culture or origin, regardless of race);

(iii) Asian and Pacific Islander (all persons having origins in any of the original peoples of the Far East, Southeast Asia, the Indian Subcontinent, or the Pacific Islands); and

(iv) American Indian or Alaskan Native (all persons having origins in any of the original peoples of North America and maintaining identifiable tribal affiliations through membership and participation or community identification).

4. **CONTRACT DOCUMENTS:** Whenever the contractor, or any subcontractor at any tier, subcontracts a portion of the work involving any construction trade, it shall physically include in each subcontract in excess of $10,000 the provisions of these specifications and the notice which contains the applicable goals for minority and female participation and which is set forth in the solicitations from which this contract resulted.

5. **AFFIRMATIVE ACTION STEPS:** The Contractor shall implement and document the specific affirmative action standards provided in paragraphs 5a through 5p of these specifications. Contractor is expected to make substantially uniform progress toward its goal in each draft during the period specified.

a. Ensure and maintain a working environment free of harassment, intimidation, and coercion at all sites, and in all facilities at which the Contractor's employees are assigned to work. The Contractor shall specifically ensure that all foremen, superintendents, and other on-site supervisory personnel are aware of and carry out the Contractor's obligation to maintain such a working environment, with specific attention to minority or female individuals working at such sites or in such facilities.

b. Establish and maintain a current list of minority and female recruitment sources, provide written notification to minority and female recruitment sources and to community organizations when the contract or its unions have employment opportunities available, and maintain a record of the organization's responses.

c. Maintain a current file of the names, addresses and telephone numbers of each minority and female off-the-street applicant and minority or female referral from a union, a recruitment source or community organization and of what action was taken with respect to each such individual. If such individual was sent to the union hiring hall for referral and was not referred back to the contractor by the union or, if referred, not employed by the Contractor, this shall be documented in the file with the reason therefore, along with whatever additional actions the Contractor may have taken.

d. Provide immediate written notification to the Director when the union or unions with which the Contractor has a collective bargaining agreement has not referred to the Contractor a minority person or woman sent by the Contractor, or when the Contractor has other information that the union referral process has impeded the Contractor's efforts to meet its obligations.

e. Develop on-the-job training opportunities and/or participate in training programs for the area which expressly include minorities and women, including upgrading programs and apprenticeship and training programs relevant to the Contractor's employment needs, especially those programs funded or approved by the Department of Labor. The Contractor shall provide notice of these programs to the sources complied under 5b above.

f. Disseminate the Contractor's EEO Policy by providing notice of the policy to unions and training programs requesting their cooperation in assisting the Contractor in meeting it's EEO obligations; by including it in any policy manual and collective bargaining agreement; by publicizing it in the company newspaper, annual report, etc.; by specific review of the policy with all management personnel and with all minority and female employees at least once a year; and by posting the company EEO Policy on bulletin boards accessible to all employees at each location where construction work is performed.

g. Review, at least annually, the company's EEO Policy and Affirmative Action obligations under these specifications with all employees having responsibility for hiring, assignment, layoff, termination or other employment decisions including specific review of these items with on site supervisory personnel such as superintendents, general foremen, etc., prior to the initiation of construction work at any job site. A written record shall be made and maintained identifying the time and place of these meetings, persons attending, subject matter discussed, and disposition of the subject matter.

h. Disseminate the Contractor's EEO Policy externally by including it in any advertising in the news media, specifically including minority and female news media, and providing written notification to and discussing the Contractor's EEO Policy with other Contractors and Subcontractors with whom the Contractor does or anticipates doing business.

i. Direct its recruitment efforts, both oral and written, to minority, female and community organizations, to schools with minority and female students and to minority female recruitment and training organizations serving the Contractor's recruitment area and employment needs. Not later than one month prior to the date for the acceptance of applications for apprenticeship or other training by any recruitment source, the Contractor shall send written notification to organizations such as the above, describing the openings, screening procedures, and tests to be used in the selection process.

j. Encourage present minority and female employees to recruit other minority persons and women and, where reasonable, provide after school, summer and

vacation employment to minority and female youth both on the site and in other areas of a Contractor's work force.

k. Validate all tests and other selection requirements where there is an obligation to do so under 41 CFR Part 60-3.

l. Conduct, at least annually, an inventory and evaluation at least of all minority and female personnel for promotional opportunities and encourage these employees to seek or to prepare for, through appropriate training etc., such opportunities.

m. Ensure that seniority practices, job classifications, work assignments and other personnel practices do not have a discriminatory effect by continually monitoring all personnel and employment related activities to ensure that the EEO Policy and the Contractor's obligations under these specifications are being carried out.

n. Ensure that all facilities and company activities are non-segregated except that separate or single-user toilet and necessary changing facilities shall be provided to assure privacy between the sexes.

o. Document and maintain a record of all solicitations of offers for subcontractors from minority and female construction Contractors and suppliers, including circulation of solicitations to minority and female Contractor associations and other business associations.

p. Conduct a review, at least annually of all supervisors' adherence to and performance under the Contractor's EEO Policies and Affirmative Action obligations.

6. **UNION CONTRACT:** Neither the provisions of any collective bargaining agreement, nor the failure by a union with whom the Contractor has a collective bargaining agreement, to refer either the minorities or women shall excuse the Contractor's obligations under these specifications, Executive Order 11246, or the regulations promulgated pursuant thereto.

7. **TRAINEE, APPRENTICE COUNT:** In order for the nonworking training hours of apprentices and trainee to be counted in meeting the goals, such apprentices and trainees must be employed by the Contractor during the training period, and the Contractor must have made a commitment to employ the apprentices and trainees at the completion of their training, subject to the availability of employment opportunities. Trainees must be trained pursuant to training programs approved by the U.S. Department of Labor.

8. **JOINT EFFORTS:** Contractors are encouraged to participate in voluntary associations which assist in fulfilling one or more of their affirmation action obligations (3a through p). The efforts of a Contractor association joint contractor-union, contractor-community, or the similar group of which the Contractor is a member and participant, may be asserted as fulfilling any one or more of its obligations under 5a through p of these specifications provided that the Contractor actively participates in the group, makes effort to assure that the group has a positive impact on the employment of minorities and women in the

industry, ensures that the concrete benefits of the program are reflected in the Contractor's minority and female workforce participation, makes a good faith effort to meet its individual goals and timetable and can provide access to documentation which demonstrates the effectiveness of actions taken on behalf of the Contractor.

The obligation to comply, however, is the Contractor's and failure of such a group to fulfill an obligation shall not be a defense for the Contractor's noncompliance.

9. **DISPARATE HIRING:** A single goal for minorities and a separate goal for women have been established. The Contractor, however, is required to provide equal opportunity and take affirmative action for all minority groups, both male and female, and all women, both minority and non-minority. Consequently, the Contractor may be in violation of the Executive Order if a particular group is employed in a substantially disparate manner (for example, even though the Contractor has achieved it's goals for women generally, the Contractor may be in violation of the Executive Order if a specific minority group of women is underutilized).

10. **NON DISCRIMINATION:** The Contractor shall not use the goals and timetables of Affirmative Action Standards to discriminate against any person because of race, color, religion, sex, or national origin.

11. **SUBCONTRACTOR SANCTIONS:** The Contractor shall carry out such sanctions and penalties for violation of these specifications and of the Equal Opportunity Clause, including suspension, termination and cancellation of existing subcontracts as may be imposed or ordered pursuant to Executive Order 11246, as amended, and its implementing regulations, by the Office of Federal Contract Compliance Programs. Any Contractor who fails to carry out such sanctions and penalties shall be in violation of these specifications and Executive Order 11246, as amended.

12. **SANCTIONS:** If the Contractor fails to comply with the Executive Order, and implementing regulations of these specifications, the Owner may proceed in accordance with 41 CFR 60-4.8.

13. **RECORDS:** The Contractor shall designate a responsible official to monitor all employment related activity to ensure that the company EEO Policy is being carried out, to submit reports relating to the provisions hereof as may be required by the Government and to keep records. Records shall at least include for each employee: the name, address, telephone numbers, construction trade, union affiliation (if any), employee identification number (when assigned), social security number, race, sex, status (e.g., mechanic, apprentice, trainee, helper or laborer), dates of changes in status, hours worked per week in the indicated trade, rate of pay, and locations at which the work was performed.

    Records shall be maintained in an easy-to-read, retrievable form. However, to the degree that existing records satisfy this requirement, Contractors shall not be required to maintain separate records.

14. **OTHER AREAS:** Nothing herein provided shall be constructed as a limitation upon the application of other superseding laws which establish different standards of compliance.

"ANTI-KICKBACK ACT"

ATTACHMENT TO SUPPLEMENTAL CONDITIONS, PARAGRAPH SC-16

Prohibited Act Exacting Kickbacks From Public Works Employees:

Whoever, by force intimidation, or threat of procuring dismissal from employment, or by any other manner whatsoever induces any person employed in the construction, prosecution, completion or repair of any public building, public work, or building or work financed in whole or in part by loans or grants from the United States, to give up any part of the compensation to which he is entitled under his contract of employment, shall be fined not more than $5,000 or imprisoned not more than five years, or both, (18 U.S.C. Section 874).

Applicability:

All Federal or Federally assisted construction contracts of $2,000 or more, 29 C.F.R. Part 3, Section 3.3 (c), and to employees on such construction projects that have the classification of laborer or mechanic or lower, but not to immediate supervisors of such employees. [29 C.F.R. Part 3, Section 3.3 (a)].

Definitions for Enforcement of This Act:

a) The term ***"building"*** or ***"work"*** generally include construction activity as distinguished from manufacturing, furnishing of materials, or servicing and maintenance work. The terms include, without limitation, buildings, structures, and improvements of all types, such as bridges, dams, plants, highways, parkways, streets, subways, tunnels, sewers, mains, powerlines, pumping stations, railways, airports, terminals, docks, piers, wharves, ways, lighthouses, buoys, jetties, breakwaters, levees, and canals; dredging, shoring, scaffolding, drilling, blasting, excavating, clearing, and landscaping. Unless conducted in connection with and at the site of such a building or work as is described in the foregoing sentence, the manufacture or furnishing of materials articles, supplies, or equipment (whether or not a Federal or State agency acquires title to such materials, articles, supplies, or equipment during the course of the manufacture or furnishing, or owns the materials from which they are manufactured or furnished) is not a "building" or "work" within the meaning of the regulation in this part.

(b) The terms ***"construction", "prosecution", "completion"***, or ***"repair"*** mean all types of work done on a particular building or work at the site thereof, including, without limitation, altering, remodeling, painting and decorating, the transporting of materials and supplies to or from the building or work by the employees of the construction Contractor or construction Subcontractor, and the manufacturing or furnishing of materials, articles, supplies, or equipment on the site of the building or work, by persons employed at the site by the Contractor or Subcontractor.

(c) The terms ***"public building"*** or ***"public work"*** include building or work for whose construction, prosecution, completion, or repair, as defined above, a Federal Agency is a contracting party, regardless of whether title thereof is in a Federal Agency.

(d) The term ***"building or work financed in whole or in part by loans or grants from the United States"*** includes building or work for whose construction, prosecution, completion, or repair, as defined above, payment or part payment is made directly or indirectly from funds provided by loans or grants by a Federal Agency. The term does not include building or work for which Federal assistance is limited solely to loan guarantees or insurance.

(e) Every person paid by a Contractor or Subcontractor in any manner for his labor in the construction, prosecution, completion, or repair of a public building or public work or building or work financed in whole or in part by loans or grants from the United States is ***"employed"*** and receiving ***"wages"***, regardless of any contractual relationship alleged to exist between him and the real employer.

(f) The term ***"any affiliated person"*** includes a spouse, child, parent, or other close relative of the Contractor or Subcontractor; a partner or officer of the Contractor or Subcontractor; a corporation closely connected with the Contractor or Subcontractor as parent, subsidiary or otherwise, and an officer or agent of such corporation.

(g) The term ***"Federal Agency"*** means the United States, the District of Columbia, and all executive departments, independent establishments, administrative agencies, and instrumentalities of the United States and of the District of Columbia, including corporations, all or substantially all of the stock of which is beneficially owned by the United States, by the District of Columbia, or any of the foregoing departments establishments, agencies, and instrumentalities.

Permissible Ways to Pay Wages:

The payment of wages shall be by cash, negotiable instruments payable on demand, or the additional forms of compensation for which deductions are permissible under this part. **No other method of payment shall be recognized on work subject to the Copeland Act.** [29 C.F.R. Part 3, Section 3.10].

Weekly Wage Statement Required From Contractors and Subcontractors:

Each Contractor or Subcontractor engaged in the construction, prosecution, completion, or repair of any public building or public work, or building or work financed in whole or in part by loans or grants from the United States, shall furnish each week a statement with respect to the wages paid each of its employees engaged on work covered by 29 C.F.R. Parts 3 and 5 during the preceding weekly payroll period.

This statement shall be executed by the Contractor or Subcontractor or by an authorized officer or employee of the Contractor or Subcontractor who supervises the payment of wages, and shall be on form WH 348, "Statement of Compliance", or on an identical form on the back of WH 347, "Payroll (For Contractors Optional Use)" or on any form with identical wording. (Sample copies of WH 347 and WH 348 may be obtained from the Government contracting or sponsoring agency, and copies of these forms may be purchased at the Government Printing Office). [29 C.F.R. Part 3, Section 3.3(b)].

This statement must be delivered or marked within seven (7) days "after the regular payment date of the payroll period" to the Contracts Compliance Administration Office, Engineering Department of the City of El Paso, the agency contracting for the work. [29 C.F.R. Part 3, Section 3.4(a)].

Penalty For Falsifying Statement or Submitting False, Fictitious or Fraudulent Statements:

Fine of not more than $10,000 or imprisonment of not more than five (5) years or both. (18 U.S.C. 1001).

Permissible Deductions:

The following payroll deductions may be made without application to or approval of the Secretary of Labor.

(a) Any deduction made in compliance with the requirements of Federal, State, or local law, such as Federal or State withholding income taxes and Federal Social Security taxes.

(b) Any deduction of sums previously paid to the employee as a bona fide prepayment of wages when such prepayment is made without discount or interest. A "bona fide prepayment of wages" is considered to have been made only in cash or its equivalent has been advanced to the person employed in such manner as to give him complete freedom of disposition of the advanced fund.

(c) Any deduction of amounts required by court process to be paid to another, unless the deduction is in favor of the Contractor, Subcontractor or any affiliated person, or when collusion or collaboration exists.

(d) Any deduction constituting a contribution on behalf of the person employed to funds established by the employer or representatives of employees, or both, for the purpose of providing either from principal or income, or both, medical or hospital care, pensions or annuities on retirement, death benefits compensation for injuries, illness, accidents, sickness, or disability, or for insurance to provide any of the foregoing, or unemployment benefits, vacation pay, savings accounts, or similar payments for the benefit of employees, their families and dependents: Provided, however, that the following standards are met:

(1) The deduction is not otherwise prohibited by law;

(2) It is either:

(i) voluntarily consented to by the employee in writing and in advance of the periods in which the work is to be done and such consent is not a condition either for the obtaining of or for the continuation of employment, or

(ii) provided for in a bona fide collective bargaining agreement between the Contractor or Subcontractor and representatives of its employees;

(3) No profit or other benefit is otherwise obtained, directly or indirectly, by the Contractor or Subcontractor or any affiliated person in the form of commission, dividend, or otherwise; and

(4) The deductions shall serve the convenience and interest of the employee.

(e) Any deduction contributing toward the purchase of United States Defense Stamps and Bonds when voluntarily authorized by the employee.

(f) Any deduction requested by the employee to enable him to repay loans to or to purchase shares in credit unions organized and operated in accordance with Federal and State credit union statutes.

(g) Any deduction voluntarily authorized by the employee for the making of contributions to governmental or quasi-governmental agencies, such as the American Red Cross.

(h) Any deduction voluntarily authorized by the employee for the making of contributions to Community Chests, United Givers Funds, and similar charitable organizations.

(i) Any deductions to pay regular union initiation fees and membership dues, not including fines or special assessments: ***Provided, however***, that a collective bargaining agreement between the contractor or subcontractor and representatives of its employees provides for such deductions and the deductions are not otherwise prohibited by law.

(j) Any deduction not more than for the "reasonable cost" of board, lodging, or other facilities meeting the requirements of section 3(m) of the Fair Labor Standards Act of 1938, as amended, and Part 531 of this title. When such deduction is made the additional records required under 516.25(a) of this title shall be kept. [29 C.F.R. Part 3, Section 3.5].

(k) Any deduction for the cost of safety equipment of nominal value purchased by the employee as his own property for his personal protection in his work, such as safety shoes, safety glasses, safety gloves, and hard hats, if such equipment is not required by law to be furnished by the employer, if such deduction is not violative of the Fair Labor Standards Act or prohibited by other law, if the cost on which the deduction is based does not exceed the actual cost to the employer where the equipment is purchased from him and does not include any direct or indirect monetary return to the employer where the equipment is purchased from a third person, and if the deduction is either

(1) Voluntarily consented to by the employee in writing and in advance of the period in which the work is to be done and such consent is not a condition either for the obtaining of employment or its continuance; or

(2) Provided for in a bona fide collective bargaining agreement between the contractor or subcontractor and representatives of its employees.

Deductions Requiring Department of Labor Approval:

Any Contractor or Subcontractor may apply to the Secretary of Labor for permission to make any deduction not permitted under 3.5 (above). The Secretary may grant permission whenever he finds that:

(a) The Contractor, Subcontractor, or any affiliated person does not make a profit or benefit directly or indirectly from the deduction either in the form of a commission, dividend, or otherwise;

(b) The deduction is not otherwise prohibited by law;

(c) The deduction is either

(1) voluntarily consented to by the employee in writing and in advance of the period in which the work is to be done and such consent is not a condition either for the obtaining of employment or its continuance, or

(2) provided for in a bona fide collective bargaining agreement between the Contractor or Subcontractor and representatives of its employees; and

(d) The deduction serves the convenience and interest of the employee. [29 C.F.R., Part 3, Section 3.6]. Deductions not elsewhere provided by this part and which are not found to be permissible under 3.6 (above) are prohibited.

How To Get Extraordinary Deductions Approved by the Secretary of Labor:

Any application for the making of payroll deductions under 3.6 (above) shall comply with the requirements prescribed in the following paragraphs of this Section:

(a) The application shall be in writing and shall be addressed to the Secretary of Labor.

(b) The application need not identify the contract or contracts under which the work in question is to be performed. Permission will be given for deductions on all current and future contracts of the applicant for a period of 1 year. A renewal of permission to make such payroll deduction will be granted upon the submission of an application which makes reference to the original application, recites the date of the Secretary of Labor's approval of such deductions, states affirmatively that there is continued compliance with the standards set forth in the provisions of § 3.6, and specifies any conditions which have changed in regard to the payroll deductions.

(c) The application shall state affirmatively that there is compliance with the standards set forth in the provisions of 3.6. The affirmation shall be accompanied by a full statement of the facts indicating such compliance.

(d) The application shall include a description of the proposed deduction, the purpose to be served thereby, and the classes of laborers or mechanics from whose wages the proposed deduction would be made.

(e) The application shall state the name and business of any third person to whom any funds obtained from the proposed deductions are to be transmitted and the affiliation of such person, if any, with the applicant.

Required Retention of Records For Three (3) Years:

(a) Each Contractor or Subcontractor shall preserve his weekly records for a period of three years from date of completion of the contract. The payroll records shall set out accurately and completely the name and address of each laborer and mechanic, his correct classification, rate of pay, daily and weekly number of hours worked, deductions made, and actual wages paid. Such payroll records shall be made available at all times for inspection by the contracting officer or his authorized representative, and by authorized representatives of the Department of Labor.

Contractor Legally Bound To Comply:

All contracts made with respect to the construction, prosecution, completion, or repair of any public building or public work or building or work financed in whole or in part by loans or grants from the United States covered by the regulations in this part shall expressly bind the Contractor or Subcontractor to comply with such of the regulations in this part as may be applicable. In this regard, see 5.5(a) of [this subtitle]. Subtitle "A", Title 29, C.F.R., Part 3. (29 C.F.R. Part 3, Section 3.11).

Legal Authority:
These requirements are imposed by authority of the Copeland Act, 40 U.S.C. 176 c (Section 2 of the Act of June 13, 1934, as amended), and made applicable to Community Development Block Grant - funded projects by 24 C.F.R. Section 570.605, Labor Standards.

Further Information on How To Comply:

Further information on compliance procedures may be obtained from:

CITY OF EL PASO
PURCHASING & STRATEGIC SOURCING DEPT.
300 N. CAMPBELL, 1ST FLOOR
EL PASO, TX 79001-1196
Telephone No. (915) 212-0043/Fax (915) 212-0044

CITY OF EL PASO
CITY ATTORNEY
300 N. CAMPBELL, 1ST FLOOR
EL PASO, TX 79901-1196
Telephone No. (915) 212-0033/Fax (915) 212-0034

TECHNICAL SPECIFICATIONS

For

EPIA Checked Baggage Inspection System
SOLICITATION NO.2016-963

PROJECT MANUAL AND TECHNICAL SPECIFICATIONS

VOLUME 1

EL PASO INTERNATIONAL AIRPORT
CHECKED BAGGAGE INSPECTION SYSTEM (CBIS)

CITY OF EL PASO
MMA PROJECT NO. 1603

May 31, 2016

SET NO.

mijares • mora
ARCHITECTS INC.

111 N. FESTIVAL DRIVE EL PASO, TEXAS
915-542-1591 FAX-542-1594

PROJECT MANUAL AND TECHNICAL SPECIFICATIONS

EL PASO INTERNATIONAL AIRPORT
CHECKED BAGGAGE INSPECTION SYSTEM (CBIS)

CITY OF EL PASO

MMA PROJECT NO. 1603

May 31, 2016

ARCHITECT
MIJARES-MORA ARCHITECTS, INC.
111 N. Festival Drive
El Paso, Texas 79912
915.542.1591
Fax 915.542.1594

CIVIL ENGINEER
Quantum Engineering Consultants
414 Executive Center Boulevard
El Paso, Texas 79902
915-532-7272 – Fax 532-7373

STRUCTURAL ENGINEER
Zamora Engineering
7170 Westwind Dr. Suite 301
El Paso, Texas 79912
915-587-9775 – Fax 587-9785

ELECTRICAL ENGINEER
Alpha Engineering
1818 E. Rio Grande
El Paso, Texas 79902
(915) 838-9900 Fax – 838-9909

MECHANICAL ENGINEER
Alegro Engineering, Inc.
4150 Rio Bravo
El Paso, Texas 79902
915-533-0700 – Fax 533-2929

BAGGAGE HANDLING SYSTEM CONSULTANT
BNP Associates
1999 Broadway Suite 3390
Denver, Colorado 80202
720.374.4930

REGISTERED ARCHITECT
GEORGE L. MORA
12526
STATE OF TEXAS

DATE 5·31·16

VOLUME I OF II
TECHNICAL SPECIFICATIONS TABLE OF CONTENTS

009500	GEOTECHNICAL DATA REPORT	1

DIVISION 01 - GENERAL REQUIREMENTS

011000	SUMMARY	4
012500	SUBSTITUTION PROCEDURES	4
012600	CONTRACT MODIFICATION PROCEDURES	3
012900	PAYMENT PROCEDURES	4
013100	PROJECT MANAGEMENT AND COORDINATION	9
013200	CONSTRUCTION PROGRESS DOCUMENTATION	4
013300	SUBMITTAL PROCEDURES	9
013516	ALTERATION PROJECT PROCEDURES	7
015000	TEMPORARY FACILITIES AND CONTROLS	9
015723	TEMPORARY STORMWATER POLLUTION CONTROL	5
017300	EXECUTION REQUIREMENTS	5
017329	CUTTING AND PATCHING	4
017700	CLOSEOUT PROCEDURES	6
017823	OPERATION AND MAINTENANCE DATA	8
017839	PROJECT RECORD DOCUMENTS	3
017900	DEMONSTRATION AND TRAINING	4

DIVISION 02 – EXISTING CONDITIONS

024113	SELECTIVE SITE DEMOLITION	4
024119	SELECTIVE STRUCTURE DEMOLITION	6

DIVISION 03 -

033000	CAST IN PLACE CONCRETE……..	16
034713	TILT UP CONCRETE…….	4

DIVISION 05 - METALS

051223	STRUCTURAL STEEL FOR BUILDING……	6
052100	STEEL JOIST FRAMING……..……..	3
053100	STEEL DECKING…….……..…….	4
054100	STRUCTURAL METAL STUD FRAMING……	3
055000	METAL FABRICATIONS.....	10
055213	PIPE AND TUBE RAILINGS	9

DIVISION 06 - WOOD, PLASTICS, AND COMPOSITES

061000	ROUGH CARPENTRY	6
064116	PLASTIC-LAMINATE-FACED ARCHITECTURAL CABINETS.....	9

DIVISION 07 - THERMAL AND MOISTURE PROTECTION

072100	THERMAL INSULATION.....	3
072413	POLYMER-BASED EXTERIOR INSULATION AND FINISH SYSTEM (EIFS)	11
075419	POLYVINYL CHLORIDE (PVC) MEMBRANE ROOFING	11
076200	SHEET METAL FLASHING AND TRIM.....	10
077200	ROOF ACCESSORIES	6
078100	APPLIED FIREPROOFING	7
078123	INTUMESCENT FIREPROOFING.....	6
078446	FIRE RESISTIVE JOINT SYSTEMS…….…….	5
079200	JOINT SEALANTS.....	10
079500	EXPANSION CONTROL.....	6

DIVISION 08 - OPENINGS

081113	HOLLOW METAL DOORS AND FRAMES	10
081416	FLUSH WOOD DOORS…….	6
083323	OVERHEAD COILING DOORS……	8
084113	ALUMINUM FRAMED ENTRANCES & STOREFRONTS……	8
087100	DOOR HARDWARE……..	19
088000	GLAZING.....	11

DIVISION 09 - FINISHES

092216	NON-STRUCTURAL METAL FRAMING.....	6
092900	GYPSUM BOARD.....	9
095113	ACOUSTICAL PANEL CEILINGS	7

096513	RESILIENT BASE AND ACCESSORIES	5
096519	RESILIENT TILE FLOORING	5
096813	TILE CARPETING	10
098433	SOUND ABSORBING WALL UNITS	5
098436	SOUND ABSORBING CEILING UNITS	5
099113	EXTERIOR PAINTING	8
099123	INTERIOR PAINTING	10
099653	ELASTOMERIC COATINGS	7
DIVISION 10 - SPECIALTIES		
101400	SIGNAGE	7
104413	FIRE PROTECTION CABINETS	5
104416	FIRE EXTINGUISHERS	3
105113	METAL LOCKERS	7
DIVISION 12 - FURNISHINGS		
122113	HORIZONTAL LOUVER BLINDS	5
DIVISION 21 – FIRE PROTECTION		
210500	COMMON WORK RESULTS FOR FIRE SUPPRESSION	8
210516	EXPANSION FITTINGS AND LOOPS FOR FIRE SUPPRESSION PIPING	4
211313	WET-PIPE SPRINKLER SYSTEMS	4
DIVISION 22 – PLUMBING		
220500	COMMON WORK REQUIREMENTS FOR PLUMBING	21
221300	FACILITY SANITARY SEWERAGE	6

END OF TABLE OF CONTENTS

SECTION 009500 – Geotechnical Data

1.01 Soil and Site Conditions

A. Soils consultants have made test boring and field boring investigations for the Owner's design use within the approximate area of construction for this project. Copies or reasonable duplications of those soli-boring results are included in the Project Manual for bidder's information. Prior to submission of bids, Bidder's should visit the site and make their own visual investigations to satisfy themselves as to soil, site and surface conditions. This data is included in the Project Manual for the Bidder's information and is offered separate from and is not a part of the Contract Documents.

B. No representation or warranties of accuracy or continuity of subsurface conditions indicated in the soil boring reports is made or intended. It is expressly understood that the Architect and Owner will not be responsible for interpretations or conclusions drawn from reports by the Contractor. Actual soil conditions may not be reflective of conditions indicated in attached reports and any differing conditions discovered may not be used as a basis for future claims for additional compensation.

1.02 Boring Reports

A. The soil boring reports found on the following pages have been taken from the Owner's records and were prepared by Professional Services Industries (PSI), El Paso, Texas.

Report of

Geotechnical Engineering Services

EPIA - Checked Baggage Inspection System
6701 Convair Road
El Paso, Texas 79925

Prepared for

Mijares Mora Architects
111 N. Festival Drive
El Paso, TX

Prepared by

Professional Service Industries, Inc.
4601 Ripley Drive
El Paso, TX 79922

May 27, 2016

PSI Project 06251116

DRAFT

May 27, 2016

Mijares Mora Architects
111 N. Festival Drive
El Paso, TX

Attention: Mr. Jorge Mora, AIA

Subject: Geotechnical Engineering Services Report
EPIA – Checked Baggage Inspection System
6701 Convair Road
El Paso, Texas 79925
PSI Project No. 06251116

Dear Mr. Mora:

Professional Service Industries, Inc. (PSI) performed the geotechnical engineering site exploration for the above referenced project. PSI provided its services in general accordance with PSI Proposal No. 0625-149119R1 dated August 28, 2015.

PSI thanks you for choosing us as your consultant for this project. Please contact us at 915-584-1317 if you have any questions or we may be of further service.

Respectfully Submitted,

PROFESSIONAL SERVICE INDUSTRIES, INC.
Texas Firm Registration No. F-03307

Ruben Barrientos, Jr., EIT
Project Manager

William H. Kingsley P.E.
Principal Consultant

Danny R. Anderson, P.E.
Senior Engineer

DRAFT

TABLE OF CONTENTS

1 PROJECT INFORMATION 2
1.1 PROJECT AUTHORIZATION 2
1.2 PROJECT DESCRIPTION 2
1.3 PURPOSE AND SCOPE OF SERVICES 2
2 SITE AND SUBSURFACE CONDITIONS 3
2.1 SITE AND LOCATION DESCRIPTION 3
2.2 SUBSURFACE CONDITIONS 4
2.3 GROUNDWATER INFORMATION 4
3 EVALUATION AND RECOMMENDATIONS 4
3.1 GEOTECHNICAL DISCUSSION 4
3.2 POTENTIAL VERTICAL RISE 5
3.3 SITE PREPARATION 5
3.4 FOUNDATION RECOMMENDATIONS 7
3.5 FLOOR SLAB RECOMMENDATIONS 10
3.6 SEISMIC SITE CLASS AND SITE COEFFICIENTS 10
3.7 PAVEMENT RECOMMENDATIONS 11
4 CONSTRUCTION CONSIDERATIONS 13
4.1 MOISTURE SENSITIVE SOILS/WEATHER CONCERNS 13
4.2 DRAINAGE AND WATER CONCERNS 13
4.3 EXCAVATIONS 13
4.4 RECOMMENDED MINIMUM SAMPLING AND TESTING FREQUENCIES 14
5 REPORT LIMITATIONS 15

FIGURES

FIGURE 1 – VICINITY MAP
FIGURE 2 – BORING PLAN

LIST OF APPENDICES

APPENDIX A – BORING LOGS
APPENDIX B – KEY TO TERMS

DRAFT

1 PROJECT INFORMATION

1.1 PROJECT AUTHORIZATION

Professional Service Industries, Inc. (PSI) has completed a geotechnical exploration for the proposed Checked Baggage Inspection System at the El Paso International Airport (EPIA) located in El Paso, TX. The services were authorized by Mr. Mora by signing PSI Proposal No. 0625-149199R1 on April 26, 2016.

1.2 PROJECT DESCRIPTION

The subject property is located at 6701 Convair Road, in the El Paso International Airport. PSI understands that the proposed project will consist of a new single story, building enclosure that will serve as an inspection system with multiple conveyer lines. The size of the enclosure is estimated to be approximately 25,000 square feet. The new building enclosure will be attached to the existing airport wing on the east side of the airport

Detailed site grading information was not available at the time of this report and, as such, the recommendations in this report are based on finished grade being within two (2) feet of existing site grades. Structural loading information provided by Mr. Larry Zamora with Zamora Engineering indicated maximum column loads not exceeding seventy-five (75) kips and wall loads on the order of two (2) kips per linear foot.

If the information referenced above is not correct, we should be contacted to confirm the recommendations presented in this report or to provide revised recommendations in a supplemental letter.

The geotechnical recommendations presented in this report are based on the available project information, structure locations, parking and drive areas and the subsurface materials described in this report. PSI will not be responsible for the implementation of its recommendations when it is not notified of changes in the project.

1.3 PURPOSE AND SCOPE OF SERVICES

The purpose of this study was to explore the subsurface conditions at the subject site by drilling and sampling materials that will be supporting the proposed structures. The subsurface information was obtained from auger boring and Standard Penetration testing and sampling. Seven (7) test borings were advanced to a depth of approximately twenty-one and one half (21½) feet within the proposed building footprint. The approximate boring locations are shown on the Boring Plan (Figure 2) in the appendix of this report. The number, depths and locations of the borings were selected by PSI.

The borings were advanced utilizing hollow stem auger drilling methods and soil samples were routinely obtained during the drilling process. During the sampling operation Standard Penetration Tests (SPT) were performed in accordance with ASTM D1586. The SPT for soil borings is performed by driving a 2-inch diameter split-spoon sampler into the undisturbed formation located at the bottom of the advanced borehole with repeated blows of a 140-pound hammer falling a vertical distance of 30-inches. The number of blows required to drive the sampler the last 12-inches of an 18-inch penetration depth is a measure of the soil consistency.

DRAFT

The borings were backfilled with soil cuttings derived from the auger drilling process following completion of the drilling operations.

Soil samples were generally obtained beginning at the one half (½) foot depth followed by the two and one half (2½) foot depth and then at two and one half (2½) foot intervals to a depth of approximately ten (10) feet below the existing ground surface. Below a depth of approximately ten (10) feet, soil samples were obtained at approximately five (5) foot intervals to the total explored depth. The samples were sealed in plastic bags at the site to prevent loss of moisture during shipment to our laboratory.

This report briefly outlines the testing procedures, presents project information, describes the site and subsurface conditions and presents recommendations regarding the following:

- subsurface soil conditions, including depth and consistency of soil strata;
- groundwater levels as observed during field work, excluding quantitative determinations of flow or dewatering rates;
- recommendations for treatment and/or removal of unsuitable bearing soils, if encountered;
- recommendations for foundations suitable for the planned development including allowable soil bearing and uplift capacities and estimated movements;
- slab-on-grade construction;
- seismic site class in accordance with IBC 2009;
- suitability of on-site material for engineered structural fill;
- recommendations for engineered structural fill; and
- flexible and rigid pavement recommendations.

Our scope of services did not include an environmental assessment for determining the presence or absence of wetlands, or hazardous or toxic materials in the soil, bedrock, surface water, groundwater, or air on or below, or around this site. Any statements in this report or on the boring logs regarding odors, colors, and unusual or suspicious items or conditions are strictly for informational purposes. Prior to development of this site, an environmental assessment is advised.

2 SITE AND SUBSURFACE CONDITIONS

2.1 SITE AND LOCATION DESCRIPTION

As previously stated, the site is located within the El Paso International Airport. The project area is located near the southeast airfield apron, directly north of the ticket counters. The area is primarily comprised of asphaltic concrete and appears to be relatively level.

DRAFT

2.2 SUBSURFACE CONDITIONS

Ground surface elevations at the test boring locations were not provided. Therefore, references to depth of the various strata encountered are from existing grade at the time of our drilling operations (May 9-10, 2016).

Select soil samples were tested in our laboratory to determine material properties for our evaluation. Laboratory testing was generally accomplished in accordance with ASTM procedures. The soils encountered consisted of Silty, or, Clayey to Poorly Graded Sands (SM, SC) within the upper seven and one half (7½) feet, underlain by Lean to Fat Clays to a depth of fifteen (15) feet. Below a depth of fifteen (15) feet, the soils encountered consisted of Silty to Poorly Graded Sands (SM, SP-SM) to boring termination. The sandy soils at the site exhibited loose to medium dense relative density conditions and the clay soils were in a stiff condition. The soils were found to be in a moist condition.

The above subsurface descriptions are of a generalized nature to highlight the major subsurface stratification features and material characteristics. The boring logs included in the Appendix should be reviewed for specific information at the boring locations. These records include soil descriptions, stratifications, penetration resistances, locations of the samples and laboratory test data. The stratifications shown on the boring logs represent the conditions only at the actual boring locations. Variations may occur and should be expected between boring locations. The stratifications represent the approximate boundary between subsurface materials and the actual transition may be gradual. Water level information obtained during field operations is also shown on the boring logs. The samples that were not altered by laboratory testing will be retained for 60 days from the date of this report and then discarded.

2.3 GROUNDWATER INFORMATION

The borings were dry while drilling and immediately following completion of drilling, indicating that the continuous groundwater level at the site at the time of the exploration was either below the terminated depths of the borings, or, that the soils encountered are relatively impermeable. Although groundwater was not encountered at this time, it is possible for a groundwater table to be present within the depths explored during other times of the year depending on climatic and rainfall conditions. Additionally, discontinuous zones of perched water may exist within the overburden materials and/or at the contact with clay lenses.

3 EVALUATION AND RECOMMENDATIONS

3.1 GEOTECHNICAL DISCUSSION

The following design recommendations have been developed based on the previously described project characteristics and subsurface conditions encountered. If there are any changes in the project criteria, including project location on the site, a review must be made by PSI to determine if any modifications in the recommendations will be required. The findings of such a review should be presented in a supplemental report. Once final design plans and specifications are available, a general review by PSI is recommended as a means to check that the conditions idealized in the project description are correct and that the earthwork and foundation recommendations are properly interpreted and implemented.

DRAFT

3.2 POTENTIAL VERTICAL RISE

Laboratory testing was performed and compared with the qualitative examinations. The laboratory test results indicate that the sub-soils in the area of the observed slab movement have a relatively high potential for expansion. It is estimated that the soils at the site have a potential for vertical movement of approximately four (4) inches. Because of the low hydraulic conductivity of the soils the calculated amount may or may not actually occur, but, the potential for the movement exists. This estimation was calculated using the Texas Department of Transportation Method TEX-124E and utilizes the moisture contents and Atterberg Limit test results of the soils within the seasonally active zone plus the thickness of soil that could be exposed to elevated moisture conditions.

The PVR value represents the vertical rise which can be experienced by dry sub-soils if they are subjected to conditions which allow them to become saturated; poor surface drainage, or, damaged water lines, would be examples. The actual movement of the sub-soils is dependent on their degree of increased moisture content. Although PSI considers it unlikely at this site, significant drying of the moisture sensitive clays can also cause shrinkage which will reduce the volume change and subsequent vertical movement. Differential vertical movements can potentially be equal to the expected total movements.

3.3 SITE PREPARATION

We recommend that the pavement at the project site be removed within the building footprint and, if any, trash and other deleterious materials in the construction areas. Deleterious material should be removed and disposed of off the site.

Due to the expansive clays encountered at the project site, a conventional slab on grade/shallow foundation system is not recommended. The following site improvements are intended to prepare the site for a drilled shaft supported grade beam and two-way slab flooring and foundation system which will be further discussed in Section 3.4 of this report.

General Soil Surface Preparation

To properly prepare the native soils to receive fill, over-excavated soil that can be used as engineered structural fill, as defined below, should be stockpiled on the site. The intent of this recommendation is to provide a suitable foundation and slab support material where possible without imported soils from offsite.

After excavation or preparation of the existing ground, the site should be proof-rolled with a loaded tandem axle dump truck, water truck or equivalent. Soils which are observed to rut or deflect excessively (greater than 1 inch) under the moving load should be undercut and replaced with properly compacted fill. The proof-rolling activities should be witnessed by a representative of the Geotechnical Engineer and should be performed during a period of dry weather.

After excavating and proof-rolling, the exposed subgrade, should be scarified to a depth of approximately eight (8) inches, be uniformly moisture conditioned to near optimum moisture content throughout the scarified section and then be compacted to at least 95 percent of the soil's maximum dry density per ASTM D1557 (modified proctor method). Engineered structural fill placement, if required to bring the site to proper grade, may then begin. The first layer of engineered structural fill should be placed in a uniform horizontal lift and be adequately keyed into

DRAFT

the stripped and scarified subgrade soils. The compacted engineered fill may then be brought to finished grade in lifts not to exceed six (6) inches in compacted thickness as required.

Structural Fill

Materials to be used for engineered structural fill should be free of organic or other deleterious materials and should have a maximum particle size less than three (3) inches. Soils proposed to be used as engineered structural fill material should be classified in accordance with procedures stated in ASTM D2487. The on-site soils meeting the following criteria could be reused as engineered structural fill. Soils will be considered satisfactory for engineered structural fill when classified as follows:

GW, GP, GC, GM, GC-GM, GP-GM, GP-GC

SW, SP, SC, SM, SC-SM, SP-SM, SP-SC

Soils will be considered unsatisfactory for engineered structural fill materials when classified as follows:

PT, OL, OH, MH, ML, CL and CH or

where the plasticity index exceeds 15.

The resulting engineered structural fill must produce a stable, uniform and consistent compacted fill body. Fill material should be placed in maximum lifts of 8 inches of loose material and should be compacted within the range of 2 percentage points below to 2 percentage points above the optimum moisture content value (-2% to +2% of OMC) for cohesionless soils and at optimum to 3 percentage points above optimum (0 to +3% of OMC) for cohesive soils, as determined by the Laboratory Compaction Characteristics of Soil Using Modified Effort (ASTM D1557, modified proctor). It is considered unlikely, however, that the on-site materials meet the above criteria for Engineered Fill.

Compaction of the fill material should be performed with appropriate types of power, pneumatic or tamping equipment. Each lift of fill should be compacted to a density which is not less than 95 percent of maximum dry density. Maximum dry density should be determined in accordance with ASTM D1557. Monitoring of the backfilling should include sufficient compaction testing by the Geotechnical Engineering representative to document that each lift of fill has been compacted to the required density. If any lift or portion of a lift does not conform to the density requirements, the lift should be thoroughly scarified and re-compacted until the required density is obtained. If water must be added, it should be uniformly applied and thoroughly mixed into the soil by disking or scarifying. Each lift of compacted engineered fill should be tested by a representative of the Geotechnical Engineer prior to placement of subsequent lifts. Care should be taken to apply compactive effort throughout the fill and fill slope areas. The moisture content and the degree of compaction of the structural fill soils should be maintained until the construction of the structures within the area.

Non-Structural Site Infrastructure

Subgrade material below exterior flatwork, and other non-structural elements beyond the exterior walls of the buildings should be treated beginning with proof-rolling, scarification, moisture treatment and compaction as described above. Where fill material is required to bring the site to grade, the material should be compacted and meet the requirements of structural fill as outlined below.

DRAFT

Below Pavements

Below pavements, native subgrade material should be treated beginning with proof-rolling, scarification, moisture treatment and compaction as described previously. Fill may then be placed as required. Where fill is required to bring the site to subgrade elevation, it should meet the requirements of structural fill as outlined below and compacted.

3.4 FOUNDATION RECOMMENDATIONS

Deep Foundation Recommendations

PSI recommends that the grade beams and columns be supported by straight drilled shaft deep foundation elements. We present the following static compression and tension values for static axial design and LPILE parameters for lateral load evaluation.

The axial load carrying capacity of drilled shafts can be computed using the static method of analysis. According to this method, axial capacity, Q, at a given penetration is taken as the sum of the side shear on the side of the shaft, Q_s, and the end or point bearing at the shaft tip, Q_P, so that:

$$Q = Q_S + Q_P = fA_S + qA_p$$

Where, A_S and A_p represent, respectively, the embedded surface area (excluding any exclusion zones noted in this report) and the end area of the shaft; f and q represent, respectively, the unit side shear and the unit end or point bearing.

The total allowable axial capacity in compression will be the summation of the allowable frictional capacity and the allowable end bearing capacity. The total allowable axial capacity in tension will be the allowable frictional capacity alone, neglecting end bearing component, plus the weight of the pier. We recommend that the side shear capacity be reduced by 30 percent when computing tension capacity.

Axial Capacity

For the site, based on the evaluation of the soil conditions, field and laboratory test results, the recommended allowable unit side shear and end bearing values shown in Table 1 should be used while designing drilled shaft elements below grade. The design values presented in the table are allowable values based on a factor of safety of 2. PSI recommends the drilled shafts be embedded at a depth no shallower then fifteen (15) feet below existing grade. Once the design is finalized, PSI should be given the opportunity to check the final length, embedment depth and bearing elevation.

DRAFT

Table 1: Recommended Allowable Side Shear and End Bearing Values

Stratum (USCS Symbol)	Depth Below Grade (ft)	Axial Compression Unit Side Shear (psf)	End Bearing (psf)
Silty Sand (SM), Clayey Sand (SC) and Poorly Graded Sands (SP, SP-SM)	0 – 7.5	0	Not Recommended to Bear Above the 15' Depth
Lean to Fat Clay (CL, CH)	7.5 - 15	0	Not Recommended to Bear Above the 15' Depth
Silty Sand (SM), Clayey Sand (SC) and Poorly Graded Sands (SP, SP-SM)	15 - 20	250	8,500

We recommend that side shear capacity be neglected to a minimum depth of fifteen (15) feet below grade or depth where lateral deflection is equal to or less than ¼ inch, whichever depth is greater.

Where pier groups may be required the spacing between individual piers should be a minimum three times the selected diameter center-to-center. Drilled shaft elements with center-to-center spacing less than 10 feet should not be installed within 24 hours following completion of adjacent elements.

Settlement

An isolated drilled shaft having a diameter of less than 60 inches when designed as discussed, is not anticipated to settle greater than approximately ½-inch. A detailed group settlement analysis was not performed, as the actual configurations are not known at this time. If a group settlement analysis is desired, PSI should be contacted to perform such a settlement analysis.

Lateral Capacity

The soil as well as the rigidity of the shaft resists the lateral loads on the shaft. Once the locations, loads and other pertinent information are provided, PSI can assist in performing lateral load analysis based on methods ranging from chart solutions to the 'p-y' approach utilizing computer programs such as LPILE or COM 624, upon request. The lateral loads on the shaft can be designed based on the criteria provided in FHWA-Drilled Shaft Manual.

The lateral design information regarding the 'p-y' data is provided in Table 2. Appropriate factors of safety should be incorporated into the design. The relationship between the soil resistance (p) and pile deflection (y) is commonly referred as 'p-y'. Along the depth of shaft, soil resistance (p) is expressed as a non-linear function of lateral shaft deflection (y). Various researchers developed 'p-y' criteria for different kind of soils. The 'p-y' curves can be automatically generated utilizing the

DRAFT

computer program LPILE. The LPILE was developed by Lymon Reese and Shin-Tower Wang, Ensoft, Inc. 'p-y' parameters for LPILE analyses are provided for the analyses of individual shafts. Appropriate factors of safety should be incorporated into the lateral shaft capacity.

Table 2: Lateral Drilled Shaft Design Parameters

Stratum (USCS Symbol)	Depth Interval (feet below grade)	Wet Unit Weight (pcf)	Assumed Internal Angle of Friction (degrees) or, Cohesion (psf)	K (pci)	ε_{50}
Silty Sand (SM), Clayey Sand (SC) and Poorly Graded Sands (SP, SP-SM)	0 – 7.5	115	28˚	75	-
Lean to Fat Clay (CL, CH)	7.5 - 15	120	500 psf	125	.005
Silty Sand (SM), Clayey Sand (SC) and Poorly Graded Sands (SP, SP-SM)	15 - 20	125	30˚	125	-

The successful completion of drilled shaft excavations will depend, to a large extent, on the suitability of the drilling equipment together with the skill of the operator. The sequence operations should be scheduled so that each shaft can be drilled, reinforcing steel placed, and the concrete placed in a continuous, rapid, and orderly manner to reduce the time that the excavation is open.

The upper fifteen (15) feet of the drilled shafts should be cased with a "frictionless" sleeve to limit the potential for side shaft uplift (attributed to negative skin friction) should the clay swell.

Shafts should be clean and be free of all loose materials and water prior to placement of concrete. The drilled shafts should be installed in accordance with the guidelines provided in FHWA-IF-99-025. We recommend a PSI representative should verify the bearing stratum, bearing depth, bearing soil condition, and bearing area and that the drilled shaft installation procedures meet the specifications.

Detailed inspection of drilled shaft construction should be made to verify that the shafts are vertical and founded in the proper bearing stratum, and to verify that all loose materials have been removed prior to concrete placement.

Any accumulated water must be removed prior to the placement of concrete. A hopper and tremie should be utilized during concrete placement to control the maximum free fall of the wet concrete to less than 5 feet unless the mix is designed so that it does not segregate during free fall and provided the shaft excavation is dry.

Concrete placed in drilled shafts should not be placed at slumps less than 6 inches unless it is consolidated with a vibrator or by other means. Concrete that is placed in shafts at a slump less than

DRAFT

6 inches increases the potential for honeycombing. Concrete used in shafts should be designed to achieve the required strength at the higher slumps as referenced above. For any given shaft, excavation, placement of steel and concreting should be completed within the same workday. Where water inflow or caving soils are encountered, excavation of shafts and placement of concrete within a very short time frame will frequently aid in proper shaft construction.

3.5 FLOOR SLAB RECOMMENDATIONS

The floor slab should be designed as a two-way structural slab supported with the grade beams above the subgrade. The elevation should be slightly greater than the predicted potential swell. PSI recommends that the void space below the slab be designed to allow a minimum of five (5) inches of clear space between the subgrade surface and the bottom of the slab.

To construct the new structural elevated slab, the concrete should be placed on compressible void forms. The void forms should be made of cellular corrugated paper such as those manufactured by SureVoid Products or other equivalent material that will lose strength after the concrete has cured and the void form material becomes saturated with moisture from the soil.

Void forms should be installed in accordance with the manufacturers' guidelines and recommendations in order to maintain warranties.

A structural engineer should be engaged to design the structural slab system. The geotechnical engineer should review the final design to verify it considers the elements referred to in these recommendations.

3.6 SEISMIC SITE CLASS AND SITE COEFFICIENTS

We understand that the project is governed by the International Building Code (IBC), 2009 edition. As part of this code, the design of structures must consider dynamic forces resulting from seismic events. These forces are dependent on the magnitude of the seismic event as well as the properties of the soils that underlie the site.

Part of the IBC code procedure to evaluate seismic forces requires the evaluation of the Seismic Site Class, which categorizes the site based upon the characteristics of the subsurface profile within the upper 100 feet of the ground surface.

To define the Seismic Site Class for this project, we have interpreted the results of our soil test borings drilled within the project site and estimated appropriate soil properties below the bottom of the boring to a depth of 100 feet, as permitted by the code. The estimated soil properties were based on data available in published geologic reports as well as our experience with subsurface conditions in the general site area.

Based upon our evaluation, it is our opinion that the subsurface conditions within the site are consistent with the characteristics of the Specific Site Class D as defined by the building code. The USGS-NEHRP probabilistic ground motion values for the site latitude 31.79962° N and longitude *-106.39508°*W which were obtained from the USGS geohazards web page (http://earthquake.usgs.gov/designmaps/us/application.php) are as follows:

DRAFT

Table 1: Ground Motion Values*

Period (sec)	Mapped MCE Spectral Response Acceleration** (g)		Site Coefficients		Adjusted MCE Spectral Response Acceleration (g)		Design Spectral Response Acceleration (g)	
0.2	S_s	0.336	F_a	1.532	S_{Ms}	0.514	S_{Ds}	0.343
1.0	S_1	0.108	F_v	2.367	S_{M1}	0.256	S_{D1}	0.171

**2% Probability of Exceedance in 50 years for Latitude 31.79962° and Longitude - 106.39508°*
***At B-C interface (i.e. top of bedrock).*
MCE = Maximum Considered Earthquake

If a thorough evaluation of the Seismic Site Class is desired, PSI can conduct a Refraction Microtremor (ReMi) study of the site to evaluate the shear wave velocity profile to a depth of 100 feet below the surface. This study involves the placement of geophones on the ground surface and recording vibrations. Through integration of the data, the characteristic shear wave velocity of each below-grade stratum can be interpreted and used to determine the Site Class in accordance with the provisions of the International Building Code 2009.

3.7 PAVEMENT RECOMMENDATIONS

The existing pavement at the site ranged from of 1½ to 6 inches of asphaltic concrete over 6 inches of graded gravel base. The existing asphalt concrete has longitudinal cracking with visible cracks ranging from ½" to 1 inch in width throughout the project site. A pavement evaluation was not included in the scope of the project, however, based on field observation and our experience in the area, it is recommended that a new pavement replace the existing surfacing. It is our opinion that the existing pavement has reached and exceeded the functional life and should be replaced. If a new pavement will be constructed, the pavement subgrade should be treated as previously discussed in the Site Preparation section of this report (Section 3.3).

The recommended pavement thicknesses presented below are considered typical and minimum for the assumed parameters in the general site area. We understand that budgetary considerations sometimes warrant thinner pavement sections than those presented. However, the client and the project designers should be aware that thinner pavement sections may result in increased maintenance costs and lower than anticipated pavement life. The pavement subgrade should be prepared as discussed in the site preparation section of this report. We have estimated the subgrade soils will be prepared to achieve a minimum CBR of 10.

The design thickness of a pavement will depend on the magnitude of axle loads and the number of load repetitions. The anticipated traffic on the proposed pavement is not known at this time. Therefore, we have included a pavement design thickness that is typical to the one proposed. In addition, the capacity in equivalent single axle loads (ESALs) that the design section can sustain is also illustrated in the following table. The capacities of these design sections are computed based on AASHTO design methods.

Based on anticipated traffic, the design engineer should compute the number of ESALs that will be subjected to the pavement during its lifetime. The pavement should be designed based on the computed ESALs. If the computed ESALs are less than the ESALs shown in the tables, then

DRAFT

the sections given on the tables should be considered as the minimum pavement thickness to be provided.

Table 2: Flexible Pavement Design Thickness

Pavement Material(s)	Life Expectancy, ESALs		
	25,000	**50,000**	**100,000**
Hot Mix Asphalt Concrete (a_1 = 0.44) Item 340*, TXDOT – Type D (Fine Surface)	2.0 inches	2.5 inches	2.5 inches
Crushed Limestone Base (a_2=0.14, CBR= 50) Item 247*, TXDOT – Type A, Grade 3 or Better	6.0 inches	8.0 inches	8.0 inches
Subgrade	8 inches Moisture Conditioned and Compacted Placed as Described Above		

*** TxDOT Standard Specifications for Construction and Maintenance of Highways, Streets, and Bridges 2014**

Table 3: Rigid Pavement Design Thickness

Pavement Material(s)	Life Expectancy, ESALs		
	37,500	**75,000**	**150,000**
Portland Cement Concrete (4,000 psi)	6.0 inches	6.0 inches	6.5 inches
Subgrade	8 inches Moisture Conditioned and Compacted Placed as Described Above		

All related civil design factors such as drainage, cross-sectional configurations, surface elevations and environmental factors which will significantly affect the service life of the pavement must be included in the preparation of the construction drawings and specifications. Concrete pavement slabs should be provided with adequate steel reinforcement. Proper finishing of concrete pavements requires the use of sawed and sealed joints, which should be designed in accordance with current Portland Cement Association guidelines. Joint spacing is recommended at maximum 12-foot intervals for reinforced concrete. Dowel bars should be used to transfer loads at the transverse joints and planned expansion joints. Periodic maintenance will be required to achieve the noted capacities.

Crushed limestone base materials in flexible pavement areas should be placed in maximum eight (8) inch loose lifts and shall be compacted to at least 100 percent of the maximum dry density as determined by the modified proctor method (ASTM D 1557). The moisture content of the base materials should be maintained near the optimum moisture content.

Rigid concrete pavement consisting of seven (7) inches of concrete underlain by four (4) inches of crushed limestone base is recommended where trash dumpsters or semi-trailers are to be parked on the pavement or where a considerable load is transferred from relatively small steel wheels, such as truck dollies. This should provide better distribution of surface loads to the subgrade and reduce deformation of the pavement surface.

Water should not be allowed to pond behind curbs and saturate the pavement base. In down grade areas the base should extend through the slope to allow any water entering the base a path to exit.

DRAFT

4 CONSTRUCTION CONSIDERATIONS

4.1 MOISTURE SENSITIVE SOILS/WEATHER CONCERNS

Some of the soils encountered at this site are expected to be sensitive to disturbances caused by construction traffic and changes in moisture content. During wet weather periods, increases in the moisture content of the soil can cause significant reduction in the soil strength and support capabilities. In addition, soils which become wet may be slow to dry and thus significantly retard the progress of grading and compaction activities. It will, therefore, be advantageous to perform earthwork and foundation construction activities during dry weather.

4.2 DRAINAGE AND WATER CONCERNS

It is extremely important at this site that water be controlled. Ideally, the moisture content of the subgrade materials should remain as constant as possible during the construction of this project. The control of moisture will limit future movement of the expansive soils.

Water should not be allowed to collect in the foundation excavation or on prepared subgrade of the construction area either during or after construction. Undercut or excavated areas should be sloped toward one corner to facilitate removal of any collected rainwater, groundwater, or surface runoff. Positive site surface drainage should be provided to reduce infiltration of surface water around the perimeter of the building. The grades should be sloped away from the building and surface drainage should be collected and discharged such that water is not permitted to infiltrate the backfill areas of the building.

As previously discussed, groundwater was not encountered at the time the field exploration was accomplished. However, it is possible that seasonal variations will cause fluctuations, or a water table to be present in the upper soils at a later time. Additionally, perched water may be encountered in discontinuous zones within the overburden and/or near the contact with clay lenses and bedrock. Any water accumulation should be removed from excavations by pumping. Should excessive and uncontrolled amounts of seepage occur, the Geotechnical Engineer should be consulted.

4.3 EXCAVATIONS

In Federal Register, Volume 54, No. 209 (October 1989), the United States Department of Labor, Occupational Safety and Health Administration (OSHA) amended its "Construction Standards for Excavations, 29 CFR, part 1926, Subpart P". This document was issued to better insure the safety of workmen entering trenches or excavations. It is mandated by this federal regulation that excavations, whether they be utility trenches, basement excavation or footing excavations, be constructed in accordance with the new OSHA guidelines. It is our understanding that these regulations are being strictly enforced and if they are not closely followed the owner and the contractor could be liable for substantial penalties.

The contractor is solely responsible for designing and constructing stable, temporary excavations and should shore, slope, or bench the sides of the excavations as required to maintain stability of both the excavation sides and bottom. The contractor's "responsible person", as defined in 29 CFR Part 1926, should evaluate the soil exposed in the excavations as part of the contractor's safety procedures. In no case should slope height, slope inclination, or excavation depth,

DRAFT

including utility trench excavation depth, exceed those specified in local, state, and federal safety regulations.

We are providing this information solely as a service to our client. PSI does not assume responsibility for construction site safety or the contractor's or other parties' compliance with local, state, and federal safety or other regulations.

4.4 RECOMMENDED MINIMUM SAMPLING AND TESTING FREQUENCIES

It is recommended that PSI be retained to provide observation and testing of construction activities involved in the foundations, earthwork, and related activities of this project. PSI cannot accept any responsibility for any conditions that deviate from those described in this report, nor for the performance of the foundations if not engaged to also provide construction observation and testing for this project. The following are recommended minimum sampling and testing frequencies.

Earthwork:

- At least one (1) moisture-density (Proctor) test, Atterberg limits test and percent finer than #200 sieve test should be performed per soils type for subgrade, backfill, fill and base materials.

- In building and pavement areas, at least one (1) density and moisture content test per 2,500 square feet of surface area should be performed on the subgrade soils for each compacted 6-inch thickness of fill. Testing of backfilled trenches should be at least one (1) density and moisture content test per 100 linear feet of trench per 8-inch compacted fill thickness.

- At least three (3) densities and moisture content tests should be performed in the building area on the subgrade soils, and at least 3 densities and moisture content tests should be performed per 6-inch compacted thickness of fill in the building area. Testing of backfilled trenches should be at least one (1) density and moisture content test per 100 linear feet of trench per 6-inch compacted fill thickness.

Concrete:

- At least one (1) slump, air content and temperature test should be performed per 30 cubic yards of each type of concrete placed each day including when the concrete test cylinders are molded.

- At least one (1) set of four (4) concrete test cylinders should be molded for each type of concrete per 100 cubic yards or fraction thereof placed in a day.

- Each set of cylinders should be tested for compressive strength with two (2) of the cylinders tested at seven (7) days and two (2) of the cylinders tested at 28 days.

- Reinforcing steel should be checked for size and placement prior to concrete placement.

DRAFT

5 REPORT LIMITATIONS

The recommendations submitted, in this report, are based on the available subsurface information obtained by PSI and a preliminary site plan provided by the client. If there are any revisions to the plans for this project, or if deviations from the subsurface conditions noted in this report are encountered during construction, PSI should be notified immediately to determine if changes in the foundation recommendations are required. If PSI is not notified of such changes, PSI will not be responsible for the impact of those changes on the project.

The Geotechnical Engineer warrants that the findings, recommendations, specifications, or professional advice contained herein have been made in accordance with generally accepted professional Geotechnical Engineering practices in the local area. No other warranties are implied or expressed.

After the plans and specifications are more complete, the Geotechnical Engineer should be retained and provided the opportunity to review the final design plans and specifications to check that our engineering recommendations have been properly incorporated into the design documents. At that time, it may be necessary to submit supplementary recommendations. If PSI is not retained to perform these functions, PSI will not be responsible for the impact of those conditions on the project. This report has been prepared for the exclusive use of Darden Restaurants, Inc., its subsidiaries and affiliates can rely upon the report under the same terms as if it was originally prepared for them, for the specific application to the EPIA Baggage Claim Inspection System, located at 6701 Convair Road in El Paso, TX.

DRAFT

FIGURES

DRAFT

psi Information To Build On Engineering • Consulting • Testing	PSI 4601 Ripley Drive El Paso, Texas 79922	**PROJECT NAME:** EPIA – Checked Baggage Inspection System 6701 Convair Road El Paso, TX PSI Project No. 06251116	**FIGURE 1** **Vicinity Map**

PSI
Information To Build On
Engineering • Consulting • Testing

PSI
4601 Ripley Drive
El Paso, Texas 79922

PROJECT NAME: EPIA – Checked Baggage Inspection System
6701 Convair Road
El Paso, TX
PSI Project No. 06251116

FIGURE 2
BORING PLAN
Approximate Boring Location
NOT TO SCALE

N

APPENDIX A – BORING LOGS

DRAFT

FIGURE: 1

BORING B1

DATE STARTED:	5/9/16	**DRILL COMPANY:**	PSI, Inc.
DATE COMPLETED:	5/9/16	**DRILLER:** AB	**LOGGED BY:** AF/JLR
COMPLETION DEPTH	21.5 ft	**DRILL RIG:**	CME-85
BENCHMARK:	N/A	**DRILLING METHOD:**	Hollow Stem Auger
ELEVATION:	N/A	**SAMPLING METHOD:**	2-in SS
LATITUDE:	31.79967°	**HAMMER TYPE:**	Automatic
LONGITUDE:	-106.39517°	**EFFICIENCY**	N/A
STATION: N/A	**OFFSET:** N/A	**REVIEWED BY:**	William H. Kingsley, P.E.

REMARKS: None

Water

While Drilling	None	feet
Upon Completion	None	feet
Delay		N/A

BORING LOCATION:
see attached Boring Plan, Figure 2

Elevation (feet)	Depth, (feet)	Graphic Log	Sample Type	Sample No.	Recovery (inches)	MATERIAL DESCRIPTION	USCS Classification	SPT Blows per 6-inch (SS)	Moisture, %	Additional Remarks
	0			SS1	18	**ASPHALT** - 3 inches thick **GRAVEL BASE** - 6 inches thick **POORLY GRADED SAND** - with silt, brown, medium dense, moist multicolored	SP-SM	6-10-13 N=23	6	Fines=9.5%
				SS2	18			6-11-3 N=24	3	
	5			SS3	18	**POORLY GRADED SAND** - multicolored, very loose, dry	SP	3-2-2 N=4	2	Fines=2.8%
				SS4	18			2-2-2 N=4		
	10			SS5	18	**CLAYEY SAND** - with gravel, brown, stiff, moist	SC	3-2-8 N=10	16	LL = 56 PL = 21 Fines=37.7%
	15			SS6	18	very stiff		9-10-15 N=25	11	Fines=33.6%
	20			SS7	18	**POORLY GRADED SAND** - with gravel, multicolored, very dense, dry	SP	17-40-45 N=85	2	Fines=5.1%
						Boring terminated at 21.5 feet below grade				

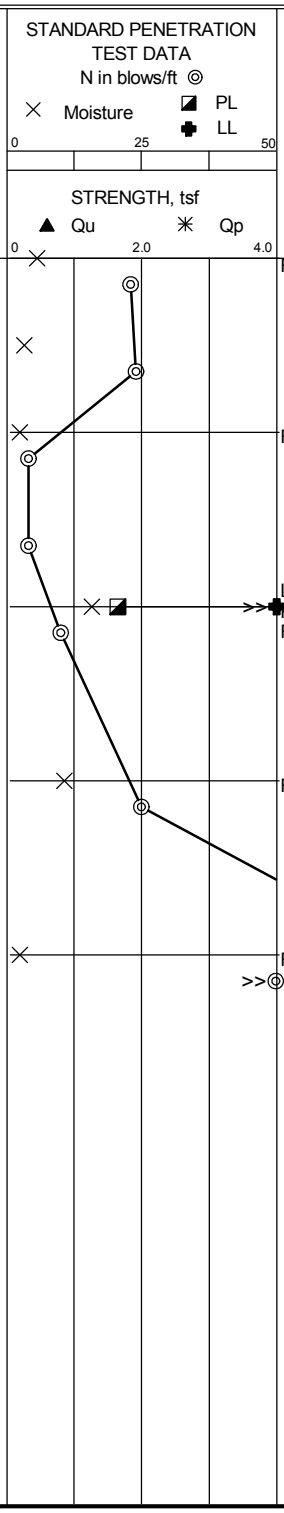

Professional Service Industries, Inc.
4601 Ripley Drive
El Paso, TX 79922
Telephone: (915) 584-1317

PROJECT NO.: 06251116
PROJECT: TSA Checked Baggage Inspection System
LOCATION: 6701 Convair Road
El Paso, TX

The stratification lines represent approximate boundaries. The transition may be gradual.

FIGURE: 2

BORING B2

DATE STARTED:	5/10/16	**DRILL COMPANY:**	PSI, Inc.
DATE COMPLETED:	5/10/16	**DRILLER:** AB	**LOGGED BY:** AF/JLR
COMPLETION DEPTH	21.5 ft	**DRILL RIG:**	CME-85
BENCHMARK:	N/A	**DRILLING METHOD:**	Hollow Stem Auger
ELEVATION:	N/A	**SAMPLING METHOD:**	2-in SS
LATITUDE:	31.79973°	**HAMMER TYPE:**	Automatic
LONGITUDE:	-106.39465°	**EFFICIENCY**	N/A
STATION: N/A	**OFFSET:** N/A	**REVIEWED BY:**	William H. Kingsley, P.E.

REMARKS: None

Water

While Drilling	None	feet
Upon Completion	None	feet
Delay	N/A	

BORING LOCATION:
see attached Boring Plan, Figure 2

Elevation (feet)	Depth, (feet)	Graphic Log	Sample Type	Sample No.	Recovery (inches)	MATERIAL DESCRIPTION	USCS Classification	SPT Blows per 6-inch (SS)	Moisture, %	Additional Remarks
	0			SS1	18	**ASPHALT** - 4.5 inches thick **GRAVEL BASE** - 6 inches thick **SILTY SAND** - multicolored, medium dense, dry		16-10-10 N=20	3	
				SS2	18	redish, moist	SM	6-9-11 N=20	6	Fines=17.4%
	5			SS3	18	**SANDY LEAN CLAY** - tan, very stiff, wet	CL	5-10-6 N=16	23	LL = 43 PL = 28 Fines=60.0%
				SS4	18	**FAT CLAY** - brown, firm, wet, with traces of carbonate cementation CCI - 1 ("Caliche")		3-3-5 N=8	29	LL = 106 PL = 26 Fines=89.9%
	10			SS5	18		CH	2-5-6 N=11	32	LL = 154 PL = 34 Fines=93.0%
	15			SS6	18	**SILTY SAND** - brown, dense, moist	SM	8-17-16 N=33	7	Fines=26.1%
	20			SS7	18	multicolored, with gravel		15-15-15 N=30	7	
						Boring terminated at 21.5 feet below grade				

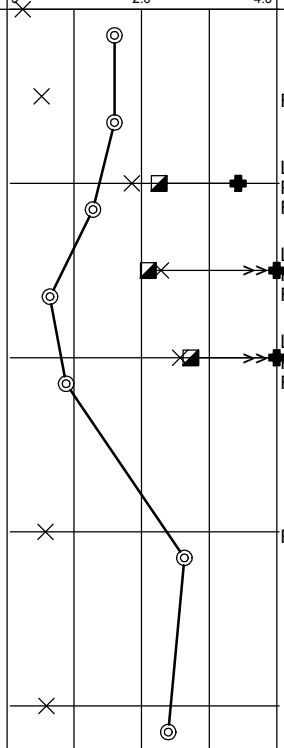

Professional Service Industries, Inc.
4601 Ripley Drive
El Paso, TX 79922
Telephone: (915) 584-1317

PROJECT NO.: 06251116
PROJECT: TSA Checked Baggage Inspection System
LOCATION: 6701 Convair Road
El Paso, TX

The stratification lines represent approximate boundaries. The transition may be gradual.

FIGURE: 3

BORING B3

DATE STARTED:	5/10/16	**DRILL COMPANY:**	PSI, Inc.
DATE COMPLETED:	5/10/16	**DRILLER:** AB	**LOGGED BY:** AF/JLR
COMPLETION DEPTH	21.5 ft	**DRILL RIG:**	CME-85
BENCHMARK:	N/A	**DRILLING METHOD:**	Hollow Stem Auger
ELEVATION:	N/A	**SAMPLING METHOD:**	2-in SS
LATITUDE:	31.79958°	**HAMMER TYPE:**	Automatic
LONGITUDE:	-106.39475°	**EFFICIENCY**	N/A
STATION: N/A	**OFFSET:** N/A	**REVIEWED BY:**	William H. Kingsley, P.E.

REMARKS: None

Water

While Drilling	None	feet
Upon Completion	None	feet
Delay	N/A	

BORING LOCATION:
see attached Boring Plan, Figure 2

Elevation (feet)	Depth, (feet)	Graphic Log	Sample Type	Sample No.	Recovery (inches)	MATERIAL DESCRIPTION	USCS Classification	SPT Blows per 6-inch (SS)	Moisture, %	Additional Remarks
	0			SS1	18	**ASPHALT** - 1.5 inches thick **GRAVEL BASE** - 6 inches thick **SILTY SAND** - redish, medium dense, moist	SM	16-10-11 N=21	6	
				SS2	18			12-11-9 N=20	6	Fines=18.4%
	5			SS3	18	**CLAYEY SAND** - brown, medium dense, moist	SC	3-9-8 N=17	10	LL = 28 PL = 18 Fines=25.3%
				SS4	18	loose		4-5-5 N=10		
	10			SS5	18	tan, medium dense, with traces of carbonate cementation CCI - 1 ("Caliche")		5-7-8 N=15	19	LL = 42 PL = 26 Fines=34.3%
	15			SS6	18			7-18-16 N=34	19	
	20			SS7	18	**POORLY GRADED SAND** - with gravel, multicolored, dense, dry	SP	10-17-26 N=43	2	Fines=3.6%
						Boring terminated at 21.5 feet below grade				

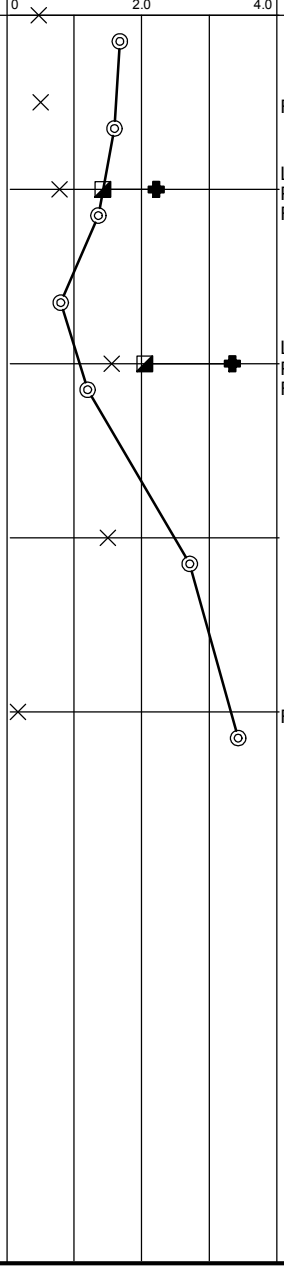

Professional Service Industries, Inc.
4601 Ripley Drive
El Paso, TX 79922
Telephone: (915) 584-1317

PROJECT NO.: 06251116
PROJECT: EPIA Checked Baggage Inspection System
LOCATION: 6701 Convair Road
El Paso, TX

The stratification lines represent approximate boundaries. The transition may be gradual.

FIGURE: 4

BORING B4

DATE STARTED:	5/10/16	**DRILL COMPANY:**	PSI, Inc.
DATE COMPLETED:	5/10/16	**DRILLER:** AB	**LOGGED BY:** AF/JLR
COMPLETION DEPTH	21.5 ft	**DRILL RIG:**	CME-85
BENCHMARK:	N/A	**DRILLING METHOD:**	Hollow Stem Auger
ELEVATION:	N/A	**SAMPLING METHOD:**	2-in SS
LATITUDE:	31.79941°	**HAMMER TYPE:**	Automatic
LONGITUDE:	-106.39459°	**EFFICIENCY**	N/A
STATION: N/A	**OFFSET:** N/A	**REVIEWED BY:**	William H. Kingsley, P.E.

REMARKS: None

Water

While Drilling	None	feet
Upon Completion	None	feet
Delay	N/A	

BORING LOCATION:
see attached Boring Plan, Figure 2

Elevation (feet)	Depth, (feet)	Graphic Log	Sample Type	Sample No.	Recovery (inches)	MATERIAL DESCRIPTION	USCS Classification	SPT Blows per 6-inch (SS)	Moisture, %	Additional Remarks
	0			SS1	18	**ASPHALT** - 2.75 inches thick **GRAVEL BASE** - 6 inches thick **SILTY SAND** - redish, medium dense, moist	SM	6-8-7 N=15	11	
				SS2	18	**CLAYEY SAND** - brown, loose, moist	SC	4-5-5 N=10	9	LL = 25 PL = 16 Fines=26.3%
	5			SS3	18			3-4-5 N=9	16	
				SS4	18	**FAT CLAY** - with sand, brown, stiff, wet	CH	2-4-7 N=11	27	LL = 89 PL = 22 Fines=83.8%
	10			SS5	18	**FAT CLAY** - brown, stiff, wet		3-4-7 N=11	31	LL = 111 PL = 29 Fines=92.2%
	15			SS6	18	**SILTY SAND** - brown, medium dense, moist	SM	6-10-13 N=23	6	Fines=16.2%
	20			SS7	18	with gravel, multicolored, dense, dry		13-23-26 N=49	2	

Boring terminated at 21.5 feet below grade

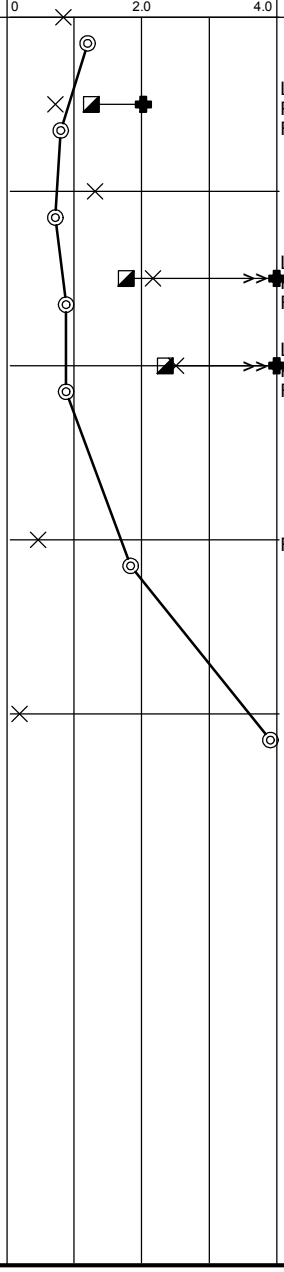

Professional Service Industries, Inc.
4601 Ripley Drive
El Paso, TX 79922
Telephone: (915) 584-1317

PROJECT NO.: 06251116
PROJECT: EPIA Checked Baggage Inspection System
LOCATION: 6701 Convair Road
El Paso, TX

The stratification lines represent approximate boundaries. The transition may be gradual.

FIGURE: 5

BORING B5

DATE STARTED:	5/9/16	**DRILL COMPANY:**	PSI, Inc.
DATE COMPLETED:	5/9/16	**DRILLER:** AB	**LOGGED BY:** AF/JLR
COMPLETION DEPTH	21.5 ft	**DRILL RIG:**	CME-85
BENCHMARK:	N/A	**DRILLING METHOD:**	Hollow Stem Auger
ELEVATION:	N/A	**SAMPLING METHOD:**	2-in SS
LATITUDE:	31.79951°	**HAMMER TYPE:**	Automatic
LONGITUDE:	-106.39474°	**EFFICIENCY**	N/A
STATION: N/A	**OFFSET:** N/A	**REVIEWED BY:**	William H. Kingsley, P.E.

REMARKS: None

Water

While Drilling	None	feet
Upon Completion	None	feet
Delay	N/A	

BORING LOCATION:
see attached Boring Plan, Figure 2

Elevation (feet)	Depth, (feet)	Graphic Log	Sample Type	Sample No.	Recovery (inches)	MATERIAL DESCRIPTION	USCS Classification	SPT Blows per 6-inch (SS)	Moisture, %	Additional Remarks
	0			SS1	18	**ASPHALT** - 1.5 inches thick **GRAVEL BASE** - 6 inches thick **POORLY GRADED SAND** - with silt, brown, medium dense, moist	SP-SM	11-7-5 N=12	5	
				SS2	18	**CLAYEY SAND** - brown, medium dense, moist		3-3-14 N=17		
	5			SS3	18	loose	SC	3-4-3 N=7	11	LL = 31 PL = 20 Fines=28.4%
				SS4	18			6-7-5 N=12	19	LL = 98 PL = 25 Fines=49.8%
	10			SS5	18	**FAT CLAY** - brown, stiff, wet	CH	3-5-6 N=11	32	LL = 126 PL = 28 Fines=95.0%
	15			SS6	18	**CLAYEY SAND** - brown, dense, moist	SC	5-12-24 N=36	11	
	20			SS7	18	**POORLY GRADED SAND** - with gravel, multicolored, very dense, moist	SP	10-23-34 N=57		
						Boring terminated at 21.5 feet below grade				

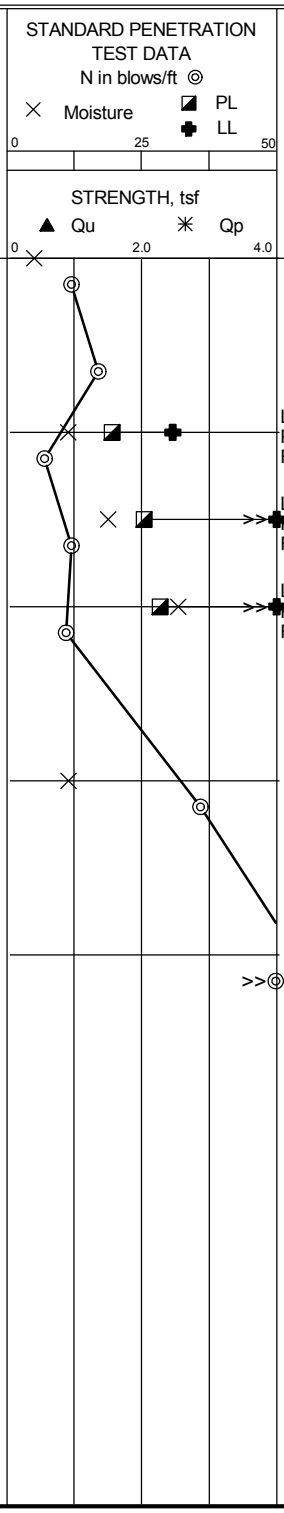

Professional Service Industries, Inc.
4601 Ripley Drive
El Paso, TX 79922
Telephone: (915) 584-1317

PROJECT NO.: 06251116
PROJECT: EPIA Checked Baggage Inspection System
LOCATION: 6701 Convair Road
El Paso, TX

The stratification lines represent approximate boundaries. The transition may be gradual.

FIGURE: 6

BORING B6

DATE STARTED:	5/9/16	**DRILL COMPANY:**	PSI, Inc.
DATE COMPLETED:	5/9/16	**DRILLER:** AB	**LOGGED BY:** AF/JLR
COMPLETION DEPTH	21.5 ft	**DRILL RIG:**	CME-85
BENCHMARK:	N/A	**DRILLING METHOD:**	Hollow Stem Auger
ELEVATION:	N/A	**SAMPLING METHOD:**	2-in SS
LATITUDE:	31.79951°	**HAMMER TYPE:**	Automatic
LONGITUDE:	-106.395°	**EFFICIENCY**	N/A
STATION: N/A	**OFFSET:** N/A	**REVIEWED BY:**	William H. Kingsley, P.E.

REMARKS: None

Water

While Drilling	None	feet
Upon Completion	None	feet
Delay	N/A	

BORING LOCATION:
see attached Boring Plan, Figure 2

Elevation (feet)	Depth, (feet)	Graphic Log	Sample Type	Sample No.	Recovery (inches)	MATERIAL DESCRIPTION	USCS Classification	SPT Blows per 6-inch (SS)	Moisture, %	Additional Remarks
	0			SS1	18	**ASPHALT** - 3.5 inches thick **GRAVEL BASE** - 6 inches thick **SILTY SAND** - brown, loose, moist	SM	6-5-3 N=8	12	LL = 36 PL = 20 Fines=37.3%
				SS2	18	**CLAYEY SAND** - tan, medium dense, moist	SC	3-9-16 N=25		
	5			SS3	18			6-6-5 N=11		
				SS4	18	**SANDY LEAN CLAY** - brown, medium dense, moist, with traces of carbonate cementation	CL	6-5-7 N=12	18	LL = 46 PL = 20 Fines=62.2%
	10			SS5	18			3-6-9 N=15	15	
	15			SS6	18	**CLAYEY SAND** - brown, dense, moist	SC	12-13-19 N=32	11	LL = 26 PL = 17 Fines=37.3%
	20			SS7	18	**POORLY GRADED SAND** - with gravel, multicolored, dense, dry	SP	7-15-29 N=44	2	Fines=3.2%
						Boring terminated at 21.5 feet below grade				

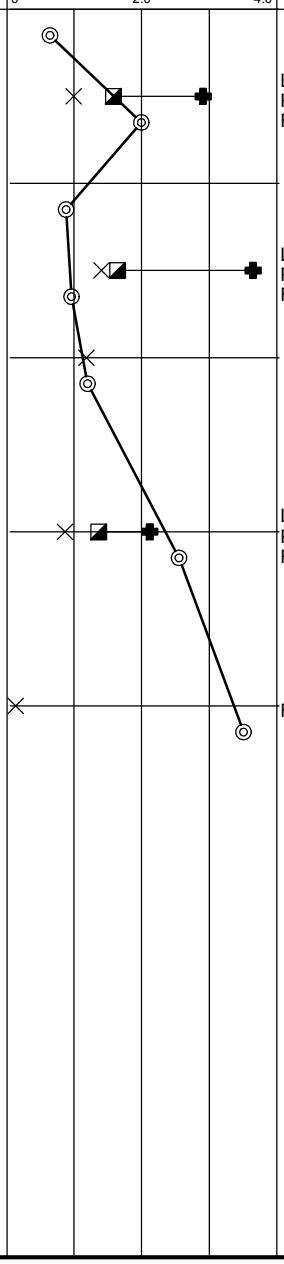

Professional Service Industries, Inc.
4601 Ripley Drive
El Paso, TX 79922
Telephone: (915) 584-1317

PROJECT NO.: 06251116
PROJECT: EPIA Checked Baggage Inspection System
LOCATION: 6701 Convair Road
El Paso, TX

The stratification lines represent approximate boundaries. The transition may be gradual.

FIGURE: 7

BORING B7

DATE STARTED:	5/9/16	**DRILL COMPANY:**	PSI, Inc.
DATE COMPLETED:	5/9/16	**DRILLER:** AB	**LOGGED BY:** AF/JLR
COMPLETION DEPTH	21.5 ft	**DRILL RIG:**	CME-85
BENCHMARK:	N/A	**DRILLING METHOD:**	Hollow Stem Auger
ELEVATION:	N/A	**SAMPLING METHOD:**	2-in SS
LATITUDE:	31.79446°	**HAMMER TYPE:**	Automatic
LONGITUDE:	-106.39526°	**EFFICIENCY**	N/A
STATION: N/A	**OFFSET:** N/A	**REVIEWED BY:**	William H. Kingsley, P.E.

REMARKS: None

Water

While Drilling	None	feet
Upon Completion	None	feet
Delay	N/A	

BORING LOCATION:
see attached Boring Plan, Figure 2

Elevation (feet)	Depth, (feet)	Graphic Log	Sample Type	Sample No.	Recovery (inches)	MATERIAL DESCRIPTION	USCS Classification	SPT Blows per 6-inch (SS)	Moisture, %	Additional Remarks
	0			SS1	18	**ASPHALT** - 6 inches thick **GRAVEL BASE** - 8 inches thick **SILTY SAND** - brown, medium dense, moist		12-11-12 N=23	4	
				SS2	18	loose	SM	6-3-3 N=6	6	Fines=19.5%
	5			SS3	18	**CLAYEY SAND** - brown, stiff, moist	SC	5-6-9 N=15	12	LL = 49 PL = 26 Fines=30.9%
				SS4	18	**POORLY GRADED SAND** - multicolored, medium dense, dry		8-7-8 N=15	3	Fines=4.2%
	10			SS5	18		SP	8-8-9 N=17		
	15			SS6	18	**CLAYEY SAND** - brown, medium dense, moist, with traces of carbonate cementation CCI - 1 ("Caliche")	SC	6-8-15 N=23	7	Fines=27.0%
	20			SS7	18	**POORLY GRADED SAND** - with gravel, multicolored, dense, dry	SP	12-16-26 N=42	2	Fines=3.1%
						Boring terminated at 21.5 feet below grade				

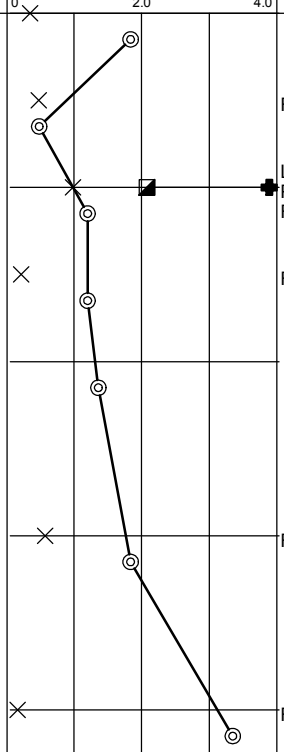

Professional Service Industries, Inc.
4601 Ripley Drive
El Paso, TX 79922
Telephone: (915) 584-1317

PROJECT NO.: 06251116
PROJECT: TSA Checked Baggage Inspection System
LOCATION: 6701 Convair Road
El Paso, TX

The stratification lines represent approximate boundaries. The transition may be gradual.

APPENDIX B – KEY TO TERMS

DRAFT

TERMS DESCRIBING CONSISTENCY OR CONDITION

COARSE GRAINED SOILS (major portion retained on #200 sieve)
Includes (1) clean gravels and sands described as fine, medium or coarse, depending on distribution of grain sizes and (2) silty or clayey gravels and sands. Condition is rated according to relative density, as determined by laboratory tests or estimated from resistance to sampler.

PENETRATION RESISTANCE BLOWS / FOOT*	DESCRIPTIVE TERM	RELATIVE DENSITY**
0 – 10	Loose	0 – 40 %
11 – 30	Medium dense	40 – 70 %
31 – 50	Dense	70 – 90 %
Over 50	Very dense	90 – 100 %

* 140 pound hammer, 30 inch drop.
** From tests on undisturbed sand sample.

FINE GRAINED SOILS (major portion passing #200 sieve)
Includes (1) inorganic and organic silts and clays, (2) gravelly, sandy, or silty clays, and (3) clayey silts. Consistency is rated according to shearing strength, as indicated by penetrometer readings or by unconfined compression tests.

DESCRIPTIVE TERM	COMPRESSIVE STRENGTH tons/sq. ft.	DESCRIPTIVE TERM	COMPRESSIVE STRENGTH tons/sq. ft.
Very Soft	Less than 0.25	Stiff	1.00 to 2.00
Soft	0.25 to 0.50	Very Stiff	2.00 to 4.00
Firm	0.50 to 1.00	Hard	4.00 & higher

NOTE: Slickensided and fissured clays may have lower unconfined compressive strengths than shown above, because of planes of weakness or shrinkage cracks in the soil. The consistency ratings of such soils are bade on penetrometer readings.

TERMS CHARACTERIZING SOIL STRUCTURE

Slickensided – having inclined planes of weakness that are slick and glassy in appearance.
Fissured – containing shrinkage cracks, frequently filled with fine sand or silt; usually more or less vertical.
Sensitive – pertaining to cohesive soils that are subject to appreciable loss of strength when remolded.
Laminated – composed of thin layers of varying colors and texture.
Interbedded – composed of alternate layers of different soil types.
Calcareous – containing appreciable quantities of calcium carbonate.
Well Graded – having wide range in grain sizes and substantial amounts of all intermediate particle sizes.
Poorly Graded – predominantly of one grain size, or having a range of sizes with some intermediate size missing.

SECTION 011000 - SUMMARY

PART 1 - GENERAL

1.1 RELATED DOCUMENTS

A. Drawings and general provisions of the Contract, including General and Supplementary Conditions and other Division 01 Specification Sections, apply to this Section.

1.2 SUMMARY

A. Section Includes:

1. Project information.
2. Work covered by Contract Documents.
3. Work under separate contracts.
4. Access to site.
5. Work restrictions.
6. Specification and drawing conventions.
7. Miscellaneous provisions.

B. Related Requirements:

1. Section 015000 "Temporary Facilities and Controls" for limitations and procedures governing temporary use of Owner's facilities.

1.3 PROJECT INFORMATION

A. Project Identification: EPIA-Checked Baggage Inspection System (CBIS) Project

B. Project Location: 6701 Convair Road
El Paso, Texas 79925

C. Owner: City of El Paso
218 N. Campbell St., Second Floor
El Paso, Texas 79901

1. Owner's Representative: Ms. Shane Brooks

D. Architect: Mijares-Mora Architects, Inc.
111 N. Festival
El Paso, Texas 79912

1.4 WORK COVERED BY CONTRACT DOCUMENTS

A. The Work of the Project is defined by the Contract Documents and consists of the following:

The work includes a new addition of approximately 32,000 square feet to house a new baggage handling system, demolition of existing pavement, rerouting of underground utilities in the area of the new addition, concrete foundations, new concrete pavement, precast concrete exterior wall panels, structural steel framing, metal deck, roof system, interior and exterior finishes, plumbing, HVAC system, electrical power and lighting, special systems infrastructure, new baggage handling system.

The work also includes interior remodel and renovation of select office areas behind the Terminal Building's ticket airline counters.

1.5 PHASED CONSTRUCTION

A. The Work shall be conducted in phases, with each phase substantially complete as indicated on the drawings.
1. Phase 1 consists of installing a Temporary Checked Baggage Handling System and associated architectural, structural, mechanical, and electrical work inside and outside of the west end of the Terminal Building, at the area of Bag Belt 1 (incoming baggage). Phase 1 will be complete upon certification, commissioning, and acceptance by the Transportation Security Administration and El Paso International Airport
2. Phase 2 consists of the remainder of the work after Phase I work is complete and the temporary baggage handling system, and associated work, is operational.
3. Phases 1, 2, 3, 4, and 5 are further described in Specification Section 347716 as they apply to the Baggage Handling System.
4. The Temporary Checked Baggage Handling System, and associated work, shall be removed in its entirety after completion of the permanent baggage handling system, all building and site improvements have been completed, and the new baggage handling system has been completed, certified, commissioned and accepted by the Transportation Security Administration and El Paso International Airport.

B. Before commencing Work of each phase, submit an updated copy of Contractor's construction schedule showing the sequence, commencement and completion dates**,** and move-out and -in dates of Owner's personnel for all phases of the Work.

C. Type of Contract:

1. Project will be constructed under a single prime contract.

1.6 WORK UNDER SEPARATE CONTRACTS

A. General: Cooperate fully with separate contractors so work on those contracts may be carried out smoothly, without interfering with or delaying work under this Contract or other contracts. Coordinate the Work of this Contract with work performed under separate contracts.

B. Concurrent Work: Owner will award separate contract(s), not limited to, for the following construction operations at Project site. Those operations will be conducted simultaneously with work under this Contract.

1. Installation of IT related systems such as IT cabling, access control, and security (CCTV).

C. Concurrently, the Transportation Security Administration will also have equipment delivered to the site and have its own respective Contractor installing its equipment and interfacing TSA's security screening system with the baggage handling system, for the temporary baggage handling system and for the final baggage handling system. Required coordination efforts are further described in Section 347716.

1.7 ACCESS TO SITE

A. General: Contractor shall have use of Project site for construction operations during construction period. Contractor's use of Project site is limited only by Owner's right to perform work or to retain other contractors on portions of Project.

B. Use of Site: Limit use of Project site to work in areas indicated. Do not disturb portions of Project site beyond areas in which the Work is indicated.

C. The airport will remain operational and the contractor is made aware that construction may be stopped at any time due to any incident that could potentially be a hazard to the contractor employees, airport employees, the public, and passengers.

D. Owner Limited Occupancy of Completed Areas of Construction: Owner reserves the right to occupy and to place and install equipment in completed portions of the Work, prior to Substantial Completion of the Work, provided such occupancy does not interfere with completion of the Work. Such placement of equipment and limited occupancy shall not constitute acceptance of the total Work.

1. Architect will prepare a Certificate of Substantial Completion for each specific portion of the Work to be occupied prior to Owner acceptance of the completed Work.
2. Obtain a Certificate of Occupancy from authorities having jurisdiction before limited Owner occupancy.
3. Before limited Owner occupancy, mechanical and electrical systems shall be fully operational, and required tests and inspections shall be successfully completed. On occupancy, Owner will operate and maintain mechanical and electrical systems serving occupied portions of Work.
4. On occupancy, Owner will assume responsibility for maintenance and custodial service for occupied portions of Work.

1.8 WORK RESTRICTIONS

A. Work Restrictions, General: Comply with restrictions on construction operations.

1. Comply with limitations on use of public streets and with other requirements of authorities having jurisdiction.

B. Nonsmoking Building: Smoking is not permitted within the building or within 25 feet (8 m) of entrances, operable windows, or outdoor-air intakes.

C. Controlled Substances: Use of tobacco products and other controlled substances on Project site is not permitted.

1.9 SPECIFICATION AND DRAWING CONVENTIONS

A. Specification Content: The Specifications use certain conventions for the style of language and the intended meaning of certain terms, words, and phrases when used in particular situations. These conventions are as follows:

1. Imperative mood and streamlined language are generally used in the Specifications. The words "shall," "shall be," or "shall comply with," depending on the context, are implied where a colon (:) is used within a sentence or phrase.
2. Specification requirements are to be performed by Contractor unless specifically stated otherwise.

B. Division 01 General Requirements: Requirements of Sections in Division 01 apply to the Work of all Sections in the Specifications.

C. Drawing Coordination: Requirements for materials and products identified on Drawings are described in detail in the Specifications. One or more of the following are used on Drawings to identify materials and products:

1. Terminology: Materials and products are identified by the typical generic terms used in the individual Specifications Sections.
2. Abbreviations: Materials and products are identified by abbreviations published as part of the U.S. National CAD Standard and scheduled on Drawings.
3. Keynoting: Materials and products are identified by reference keynotes referencing Specification Section numbers found in this Project Manual.

1.10 MISCELLANEOUS PROVISIONS

PART 2 - PRODUCTS (Not Used)

PART 3 - EXECUTION (Not Used)

END OF SECTION 011000

SECTION 012500 - SUBSTITUTION PROCEDURES

PART 1 - GENERAL

1.1 RELATED DOCUMENTS

A. Drawings and general provisions of the Contract, including General and Supplementary Conditions and other Division 01 Specification Sections, apply to this Section.

1.2 SUMMARY

A. Section includes administrative and procedural requirements for substitutions.

B. Related Sections:
1. Division 01 Section "Product Requirements" for requirements for submitting comparable product submittals for products by listed manufacturers.
2. Divisions 02 through 49 Sections for specific requirements and limitations for substitutions.

1.3 DEFINITIONS

A. Substitutions: Changes in products, materials, equipment, and methods of construction from those required by the Contract Documents and proposed by Contractor.

1. Substitutions for Cause: Changes proposed by Contractor that are required due to changed Project conditions, such as unavailability of product, regulatory changes, or unavailability of required warranty terms.
2. Substitutions for Convenience: Changes proposed by Contractor or Owner that are not required in order to meet other Project requirements but may offer advantage to Contractor or Owner.

1.4 SUBMITTALS

A. Substitution Requests: Submit three copies of each request for consideration. Identify product or fabrication or installation method to be replaced. Include Specification Section number and title and Drawing numbers and titles.

1. Documentation: Show compliance with requirements for substitutions and the following, as applicable:

a. Statement indicating why specified product or fabrication or installation cannot be provided, if applicable.
b. Coordination information, including a list of changes or modifications needed to other parts of the Work and to construction performed by Owner and separate contractors that will be necessary to accommodate proposed substitution.

c. Detailed comparison of significant qualities of proposed substitution with those of the Work specified. Include annotated copy of applicable specification section. Significant qualities may include attributes such as performance, weight, size, durability, visual effect, sustainable design characteristics, warranties, and specific features and requirements indicated. Indicate deviations, if any, from the Work specified.
d. Product Data, including drawings and descriptions of products and fabrication and installation procedures.
e. Samples, where applicable or requested.
f. Certificates and qualification data, where applicable or requested.
g. List of similar installations for completed projects with project names and addresses and names and addresses of architects and owners.
h. Material test reports from a qualified testing agency indicating and interpreting test results for compliance with requirements indicated.
i. Research reports evidencing compliance with building code in effect for Project, from ICC-ES.
j. Detailed comparison of Contractor's construction schedule using proposed substitution with products specified for the Work, including effect on the overall Contract Time. If specified product or method of construction cannot be provided within the Contract Time, include letter from manufacturer, on manufacturer's letterhead, stating date of receipt of purchase order, lack of availability, or delays in delivery.
k. Cost information, including a proposal of change, if any, in the Contract Sum.
l. Contractor's certification that proposed substitution complies with requirements in the Contract Documents except as indicated in substitution request, is compatible with related materials, and is appropriate for applications indicated.
m. Contractor's waiver of rights to additional payment or time that may subsequently become necessary because of failure of proposed substitution to produce indicated results.

2. Architect's Action: If necessary, Architect will request additional information or documentation for evaluation within seven days of receipt of a request for substitution. Architect will notify Contractor of acceptance or rejection of proposed substitution within 15 days of receipt of request, or seven days of receipt of additional information or documentation, whichever is later.

a. Forms of Acceptance: Change Order, Construction Change Directive, or Architect's Supplemental Instructions for minor changes in the Work.
b. Use product specified if Architect does not issue a decision on use of a proposed substitution within time allocated.

1.5 QUALITY ASSURANCE

A. Compatibility of Substitutions: Investigate and document compatibility of proposed substitution with related products and materials. Engage qualified testing agency to perform compatibility tests recommended by manufacturers.

1.6 PROCEDURES

A. Coordination: Modify or adjust affected work as necessary to integrate work of the approved substitutions.

PART 2 - PRODUCTS

2.1 SUBSTITUTIONS

A. Substitutions for Cause: Submit requests for substitution immediately upon discovery of need for change, but not later than 30 days prior to time required for preparation and review of related submittals.

1. Conditions: Architect will consider Contractor's request for substitution when the following conditions are satisfied. If the following conditions are not satisfied, Architect will return requests without action, except to record noncompliance with these requirements:

a. Requested substitution is consistent with the Contract Documents and will produce indicated results.
b. Substitution request is fully documented and properly submitted.
c. Requested substitution will not adversely affect Contractor's construction schedule.
d. Requested substitution has received necessary approvals of authorities having jurisdiction.
e. Requested substitution is compatible with other portions of the Work.
f. Requested substitution has been coordinated with other portions of the Work.
g. Requested substitution provides specified warranty.
h. If requested substitution involves more than one contractor, requested substitution has been coordinated with other portions of the Work, is uniform and consistent, is compatible with other products, and is acceptable to all contractors involved.

B. Substitutions for Convenience: Architect will consider requests for substitution if received within 60 days after the Notice to Proceed. Requests received after that time may be considered or rejected at discretion of Architect.

1. Conditions: Architect will consider Contractor's request for substitution when the following conditions are satisfied. If the following conditions are not satisfied, Architect will return requests without action, except to record noncompliance with these requirements:

a. Requested substitution offers Owner a substantial advantage in cost, time, energy conservation, or other considerations, after deducting additional responsibilities Owner must assume. Owner's additional responsibilities may include compensation to Architect for redesign and evaluation services, increased cost of other construction by Owner, and similar considerations.
b. Requested substitution does not require extensive revisions to the Contract Documents.
c. Requested substitution is consistent with the Contract Documents and will produce indicated results.

d. Substitution request is fully documented and properly submitted.
e. Requested substitution will not adversely affect Contractor's construction schedule.
f. Requested substitution has received necessary approvals of authorities having jurisdiction.
g. Requested substitution is compatible with other portions of the Work.
h. Requested substitution has been coordinated with other portions of the Work.
i. Requested substitution provides specified warranty.
j. If requested substitution involves more than one contractor, requested substitution has been coordinated with other portions of the Work, is uniform and consistent, is compatible with other products, and is acceptable to all contractors involved.

PART 3 - EXECUTION (Not Used)

END OF SECTION 012500

SECTION 012600 - CONTRACT MODIFICATION PROCEDURES

PART 1 - GENERAL

1.1 RELATED DOCUMENTS

A. Drawings and general provisions of the Contract, including General and Supplementary Conditions and other Division 01 Specification Sections, apply to this Section.

1.2 SUMMARY

A. This Section specifies administrative and procedural requirements for handling and processing Contract modifications.

B. Related Sections include the following:

1. Division 01 Section "Product Requirements" for administrative procedures for handling requests for substitutions made after Contract award.

1.3 MINOR CHANGES IN THE WORK

A. Contractor will issue supplemental instructions authorizing Minor Changes in the Work, not involving adjustment to the Contract Sum or the Contract Time, on AIA Document G710, "Architect's Supplemental Instructions."

1.4 PROPOSAL REQUESTS

A. Owner-Initiated Proposal Requests: Architect will issue a detailed description of proposed changes in the Work that may require adjustment to the Contract Sum or the Contract Time. If necessary, the description will include supplemental or revised Drawings and Specifications.

1. Proposal Requests issued by Architect are for information only. Do not consider them instructions either to stop work in progress or to execute the proposed change.
2. Contractor shall, within time specified in Proposal Request but not less than 20 days after receipt of Proposal Request, submit a quotation estimating cost adjustments to the Contract Sum and the Contract Time necessary to execute the change.

a. Include a list of quantities of products required or eliminated and unit costs, with total amount of purchases and credits to be made. If requested, furnish survey data to substantiate quantities.
b. Indicate applicable taxes, delivery charges, equipment rental, and amounts of trade discounts.
c. Include costs of labor and supervision directly attributable to the change.
d. Include an updated Contractor's Construction Schedule that indicates the effect of the change, including, but not limited to, changes in activity duration, start and

finish times, and activity relationship. Use available total float before requesting an extension of the Contract Time.

B. Contractor-Initiated Proposals: If latent or unforeseen conditions require modifications to the Contract, Contractor may propose changes by submitting a request for a change to Architect.

1. Include a statement outlining reasons for the change and the effect of the change on the Work. Provide a complete description of the proposed change. Indicate the effect of the proposed change on the Contract Sum and the Contract Time.
2. Include a list of quantities of products required or eliminated and unit costs, with total amount of purchases and credits to be made. If requested, furnish survey data to substantiate quantities.
3. Indicate applicable taxes, delivery charges, equipment rental, and amounts of trade discounts.
4. Include costs of labor and supervision directly attributable to the change.
5. Include an updated Contractor's Construction Schedule that indicates the effect of the change, including, but not limited to, changes in activity duration, start and finish times, and activity relationship. Use available total float before requesting an extension of the Contract Time.
6. Comply with requirements in Division 01 Section "Product Requirements" if the proposed change requires substitution of one product or system for product or system specified.

C. Proposal Request Form: Use AIA Document G709 for Proposal Requests.

1.5 CHANGE ORDER PROCEDURES

A. On Owner's approval of a Proposal Request, Architect will issue a Change Order for signatures of Owner and Contractor on AIA Document G701.

1.6 CONSTRUCTION CHANGE DIRECTIVE

A. Construction Change Directive: Architect may issue a Construction Change Directive on AIA Document G714. Construction Change Directive instructs Contractor to proceed with a change in the Work, for subsequent inclusion in a Change Order.

1. Construction Change Directive contains a complete description of change in the Work. It also designates method to be followed to determine change in the Contract Sum or the Contract Time.

B. Documentation: Maintain detailed records on a time and material basis of work required by the Construction Change Directive.

1. After completion of change, submit an itemized account and supporting data necessary to substantiate cost and time adjustments to the Contract.

PART 2 - PRODUCTS (Not Used)

PART 3 - EXECUTION (Not Used)

END OF SECTION 012600

SECTION 012900 - PAYMENT PROCEDURES

PART 1 - GENERAL

1.1 RELATED DOCUMENTS

A. Drawings and general provisions of the Contract, including General and Supplementary Conditions and other Division 01 Specification Sections, apply to this Section.

1.2 SUMMARY

A. This Section specifies administrative and procedural requirements necessary to prepare and process Applications for Payment.

B. Related Sections include the following:

1. Division 01 Section "Contract Modification Procedures" for administrative procedures for handling changes to the Contract.
2. Division 01 Section "Construction Progress Documentation" for administrative requirements governing preparation and submittal of Contractor's Construction Schedule and Submittals Schedule.

1.3 DEFINITIONS

A. Schedule of Values: A statement furnished by Contractor allocating portions of the Contract Sum to various portions of the Work and used as the basis for reviewing Contractor's Applications for Payment.

1.4 SCHEDULE OF VALUES

A. Coordination: Coordinate preparation of the Schedule of Values with preparation of Contractor's Construction Schedule.

1. Correlate line items in the Schedule of Values with other required administrative forms and schedules, including the following:

a. Application for Payment forms with Continuation Sheets.
b. Submittals Schedule.
c. Contractor's Construction Schedule.

2. Submit the Schedule of Values to Architect at earliest possible date but no later than seven days before the date scheduled for submittal of initial Applications for Payment.
3. Subschedules: Where the Work is separated into phases requiring separately phased payments, provide subschedules showing values correlated with each phase of payment.

B. Format and Content: Use the Project Manual table of contents as a guide to establish line items for the Schedule of Values. Provide at least one line item for each Specification Section.

1. Identification: Include the following Project identification on the Schedule of Values:

   a. Project name and location.
   b. Name of Architect.
   c. Architect's project number.
   d. Contractor's name and address.
   e. Date of submittal.

2. Submit draft of AIA Document G703 Continuation Sheets.
3. Provide a breakdown of the Contract Sum in enough detail to facilitate continued evaluation of Applications for Payment and progress reports. Coordinate with the Project Manual table of contents. Provide several line items for principal subcontract amounts, where appropriate
4. Round amounts to nearest whole dollar; total shall equal the Contract Sum.
5. Provide a separate line item in the Schedule of Values for each part of the Work where Applications for Payment may include materials or equipment purchased or fabricated and stored, but not yet installed.

   a. Differentiate between items stored on-site and items stored off-site. Include evidence of insurance or bonded warehousing.

6. Each item in the Schedule of Values and Applications for Payment shall be complete. Include total cost and proportionate share of general overhead and profit for each item.

   a. Temporary facilities and other major cost items that are not direct cost of actual work-in-place may be shown either as separate line items in the Schedule of Values or distributed as general overhead expense, at Contractor's option.

7. Schedule Updating: Update and resubmit the Schedule of Values before the next Applications for Payment when Change Orders or Construction Change Directives result in a change in the Contract Sum.

1.5 APPLICATIONS FOR PAYMENT

A. Each Application for Payment shall be consistent with previous applications and payments as certified by Architect and paid for by Owner.

1. Initial Application for Payment, Application for Payment at time of Substantial Completion, and final Application for Payment involve additional requirements.

B. Payment Application Times: The date for each progress payment is indicated in the Agreement between Owner and Contractor. The period of construction Work covered by each Application for Payment is the period indicated in the Agreement.

C. Payment Application Forms: Use AIA Document G702 and AIA Document G703 Continuation Sheets as form for Applications for Payment.

D. Application Preparation: Complete every entry on form. Notarize and execute by a person authorized to sign legal documents on behalf of Contractor. Architect will return incomplete applications without action.

1. Entries shall match data on the Schedule of Values and Contractor's Construction Schedule. Use updated schedules if revisions were made.
2. Include amounts of Change Orders and Construction Change Directives issued before last day of construction period covered by application.

E. Transmittal: Submit 3 signed and notarized original copies of each Application for Payment to Architect by a method ensuring receipt within 24 hours. One copy shall include waivers of lien and similar attachments.

1. Transmit each copy with a transmittal form listing attachments and recording appropriate information about application.

F. Waivers of Mechanic's Lien: With each Application for Payment, submit waivers of mechanic's liens from subcontractors, sub-subcontractors, and suppliers for construction period covered by the previous application.

1. Submit partial waivers on each item for amount requested in previous application, after deduction for retainage, on each item.
2. When an application shows completion of an item, submit final or full waivers.
3. Owner reserves the right to designate which entities involved in the Work must submit waivers.
4. Submit final Application for Payment with or preceded by final waivers from every entity involved with performance of the Work covered by the application who is lawfully entitled to a lien.
5. Waiver Forms: Submit waivers of lien on forms, executed in a manner acceptable to Owner.

G. Initial Application for Payment: Administrative actions and submittals that must precede or coincide with submittal of first Application for Payment include the following:

1. List of subcontractors.
2. Schedule of Values.
3. Contractor's Construction Schedule (preliminary if not final).
4. Products list.
5. Schedule of unit prices.
6. Submittals Schedule (preliminary if not final).
7. List of Contractor's staff assignments.
8. List of Contractor's principal consultants.
9. Copies of building permits.
10. Copies of authorizations and licenses from authorities having jurisdiction for performance of the Work.
11. Initial progress report.
12. Report of preconstruction conference.
13. Certificates of insurance and insurance policies.
14. Performance and payment bonds.
15. Data needed to acquire Owner's insurance.
16. Initial settlement survey and damage report if required.

H. Application for Payment at Substantial Completion: After issuing the Certificate of Substantial Completion, submit an Application for Payment showing 100 percent completion for portion of the Work claimed as substantially complete.

1. Include documentation supporting claim that the Work is substantially complete and a statement showing an accounting of changes to the Contract Sum.
2. This application shall reflect Certificates of Partial Substantial Completion issued previously for Owner occupancy of designated portions of the Work.

I. Final Payment Application: Submit final Application for Payment with releases and supporting documentation not previously submitted and accepted, including, but not limited, to the following:

1. Evidence of completion of Project closeout requirements.
2. Insurance certificates for products and completed operations where required and proof that taxes, fees, and similar obligations were paid.
3. Updated final statement, accounting for final changes to the Contract Sum.
4. AIA Document G706, "Contractor's Affidavit of Payment of Debts and Claims."
5. AIA Document G706A, "Contractor's Affidavit of Release of Liens."
6. AIA Document G707, "Consent of Surety to Final Payment."
7. Evidence that claims have been settled.
8. Final meter readings for utilities, a measured record of stored fuel, and similar data as of date of Substantial Completion or when Owner took possession of and assumed responsibility for corresponding elements of the Work.
9. Final, liquidated damages settlement statement.

PART 2 - PRODUCTS (Not Used)

PART 3 - EXECUTION (Not Used)

END OF SECTION 012900

SECTION 013100 - PROJECT MANAGEMENT AND COORDINATION

PART 1 - GENERAL

1.1 RELATED DOCUMENTS

A. Drawings and general provisions of the Contract, including General and Supplementary Conditions and other Division 01 Specification Sections, apply to this Section.

1.2 SUMMARY

A. Section includes administrative provisions for coordinating construction operations on Project including, but not limited to, the following:

1. General coordination procedures.
2. Coordination drawings.
3. Requests for Information (RFIs).
4. Project meetings.

B. Each contractor shall participate in coordination requirements. Certain areas of responsibility are assigned to a specific contractor.

C. Related Requirements:
1. Section 013200 "Construction Progress Documentation" for preparing and submitting Contractor's construction schedule.
2. Section 017300 "Execution" for procedures for coordinating general installation and field-engineering services, including establishment of benchmarks and control points.
3. Section 017700 "Closeout Procedures" for coordinating closeout of the Contract.

1.3 DEFINITIONS

A. RFI: Request from Owner, Architect, or Contractor seeking information required by or clarifications of the Contract Documents.

1.4 INFORMATIONAL SUBMITTALS

A. Subcontract List: Prepare a written summary identifying individuals or firms proposed for each portion of the Work, including those who are to furnish products or equipment fabricated to a special design. Include the following information in tabular form:

1. Name, address, and telephone number of entity performing subcontract or supplying products.
2. Number and title of related Specification Section(s) covered by subcontract.
3. Drawing number and detail references, as appropriate, covered by subcontract.

B. Key Personnel Names: Within15 days of starting construction operations, submit a list of key personnel assignments, including superintendent and other personnel in attendance at Project site. Identify individuals and their duties and responsibilities; list addresses and telephone numbers, including home, office, and cellular telephone numbers and e-mail addresses. Provide names, addresses, and telephone numbers of individuals assigned as alternates in the absence of individuals assigned to Project.

1. Post copies of list in project meeting room, in temporary field office, and by each temporary telephone. Keep list current at all times.

1.5 GENERAL COORDINATION PROCEDURES

A. Coordination: Coordinate construction operations included in different Sections of the Specifications to ensure efficient and orderly installation of each part of the Work. Coordinate construction operations, included in different Sections, that depend on each other for proper installation, connection, and operation.

1. Schedule construction operations in sequence required to obtain the best results where installation of one part of the Work depends on installation of other components, before or after its own installation.
2. Coordinate installation of different components to ensure maximum performance and accessibility for required maintenance, service, and repair.
3. Make adequate provisions to accommodate items scheduled for later installation.

B. Prepare memoranda for distribution to each party involved, outlining special procedures required for coordination. Include such items as required notices, reports, and list of attendees at meetings.

1. Prepare similar memoranda for Owner and separate contractors if coordination of their Work is required.

C. Administrative Procedures: Coordinate scheduling and timing of required administrative procedures with other construction activities to avoid conflicts and to ensure orderly progress of the Work. Such administrative activities include, but are not limited to, the following:

1. Preparation of Contractor's construction schedule.
2. Preparation of the schedule of values.
3. Installation and removal of temporary facilities and controls.
4. Delivery and processing of submittals.
5. Progress meetings.
6. Preinstallation conferences.
7. Project closeout activities.
8. Startup and adjustment of systems.

1.6 COORDINATION DRAWINGS

A. Coordination Drawings, General: Prepare coordination drawings according to requirements in individual Sections, and additionally where installation is not completely shown on Shop Drawings, where limited space availability necessitates coordination, or if coordination is

required to facilitate integration of products and materials fabricated or installed by more than one entity.

1. Content: Project-specific information, drawn accurately to a scale large enough to indicate and resolve conflicts. Do not base coordination drawings on standard printed data. Include the following information, as applicable:

    a. Use applicable Drawings as a basis for preparation of coordination drawings. Prepare sections, elevations, and details as needed to describe relationship of various systems and components.
    b. Indicate functional and spatial relationships of components of architectural, structural, civil, mechanical, and electrical systems.
    c. Indicate space requirements for routine maintenance and for anticipated replacement of components during the life of the installation.
    d. Show location and size of access doors required for access to concealed dampers, valves, and other controls.
    e. Indicate required installation sequences.
    f. Indicate dimensions shown on the Drawings. Specifically note dimensions that appear to be in conflict with submitted equipment and minimum clearance requirements. Provide alternate sketches to Architect indicating proposed resolution of such conflicts. Minor dimension changes and difficult installations will not be considered changes to the Contract.

B. Coordination Drawing Organization: Organize coordination drawings as follows:

1. Floor Plans and Reflected Ceiling Plans: Show architectural and structural elements, and mechanical, plumbing, fire-protection, fire-alarm, and electrical Work. Show locations of visible ceiling-mounted devices relative to acoustical ceiling grid. Supplement plan drawings with section drawings where required to adequately represent the Work.
2. Plenum Space: Indicate subframing for support of ceiling and wall systems, mechanical and electrical equipment, and related Work. Locate components within ceiling plenum to accommodate layout of light fixtures indicated on Drawings. Indicate areas of conflict between light fixtures and other components.
3. Mechanical Rooms: Provide coordination drawings for mechanical rooms showing plans and elevations of mechanical, plumbing, fire-protection, fire-alarm, and electrical equipment.
4. Structural Penetrations: Indicate penetrations and openings required for all disciplines.
5. Slab Edge and Embedded Items: Indicate slab edge locations and sizes and locations of embedded items for metal fabrications, sleeves, anchor bolts, bearing plates, angles, door floor closers, slab depressions for floor finishes, curbs and housekeeping pads, and similar items.
6. Mechanical and Plumbing Work: Show the following:

    a. Sizes and bottom elevations of ductwork, piping, and conduit runs, including insulation, bracing, flanges, and support systems.
    b. Dimensions of major components, such as dampers, valves, diffusers, access doors, cleanouts and electrical distribution equipment.
    c. Fire-rated enclosures around ductwork.

7. Electrical Work: Show the following:

a. Runs of vertical and horizontal conduit 1-1/4 inches (32 mm) in diameter and larger.
b. Light fixture, exit light, emergency battery pack, smoke detector, and other fire-alarm locations.
c. Panel board, switch board, switchgear, transformer, busway, generator, and motor control center locations.
d. Location of pull boxes and junction boxes, dimensioned from column center lines.

8. Fire-Protection System: Show the following:

a. Locations of standpipes, mains piping, branch lines, pipe drops, and sprinkler heads.

9. Review: Architect will review coordination drawings to confirm that the Work is being coordinated, but not for the details of the coordination, which are Contractor's responsibility. If Architect determines that coordination drawings are not being prepared in sufficient scope or detail, or are otherwise deficient, Architect will so inform Contractor, who shall make changes as directed and resubmit.
10. Coordination Drawing Prints: Prepare coordination drawing prints according to requirements in Section 013300 "Submittal Procedures."

1.7 REQUESTS FOR INFORMATION (RFIs)

A. General: Immediately on discovery of the need for additional information or interpretation of the Contract Documents, Contractor shall prepare and submit an RFI in the form specified.

1. Architect will return RFIs submitted to Architect by other entities controlled by Contractor with no response.
2. Coordinate and submit RFIs in a prompt manner so as to avoid delays in Contractor's work or work of subcontractors.

B. Content of the RFI: Include a detailed, legible description of item needing information or interpretation and the following:

1. Project name.
2. Project number.
3. Date.
4. Name of Contractor.
5. Name of Architect.
6. RFI number, numbered sequentially.
7. RFI subject.
8. Specification Section number and title and related paragraphs, as appropriate.
9. Drawing number and detail references, as appropriate.
10. Field dimensions and conditions, as appropriate.
11. Contractor's suggested resolution. If Contractor's suggested resolution impacts the Contract Time or the Contract Sum, Contractor shall state impact in the RFI.
12. Contractor's signature.
13. Attachments: Include sketches, descriptions, measurements, photos, Product Data, Shop Drawings, coordination drawings, and other information necessary to fully describe items needing interpretation.

a. Include dimensions, thicknesses, structural grid references, and details of affected materials, assemblies, and attachments on attached sketches.

C. RFI Forms**:** Software-generated form with substantially the same content as indicated above, acceptable to Architect.

1. Attachments shall be electronic files in Adobe Acrobat PDF format.

D. Architect's Action: Architect will review each RFI, determine action required, and respond. Allow seven working days for Architect's response for each RFI. RFIs received by Architect after 1:00 p.m. will be considered as received the following working day.

1. The following Contractor-generated RFIs will be returned without action:

a. Requests for approval of submittals.
b. Requests for approval of substitutions.
c. Requests for approval of Contractor's means and methods.
d. Requests for coordination information already indicated in the Contract Documents.
e. Requests for adjustments in the Contract Time or the Contract Sum.
f. Requests for interpretation of Architect's actions on submittals.
g. Incomplete RFIs or inaccurately prepared RFIs.

2. Architect's action may include a request for additional information, in which case Architect's time for response will date from time of receipt of additional information.
3. Architect's action on RFIs that may result in a change to the Contract Time or the Contract Sum may be eligible for Contractor to submit Change Proposal according to Section 012600 "Contract Modification Procedures."

a. If Contractor believes the RFI response warrants change in the Contract Time or the Contract Sum, notify Architect in writing within10 days of receipt of the RFI response.

E. RFI Log: Prepare, maintain, and submit a tabular log of RFIs organized by the RFI number. Submit log weekly.

1. Project name.
2. Name and address of Contractor.
3. Name and address of Architect.
4. RFI number including RFIs that were returned without action or withdrawn.
5. RFI description.
6. Date the RFI was submitted.
7. Date Architect's response was received.

F. On receipt of Architect's action, update the RFI log and immediately distribute the RFI response to affected parties. Review response and notify Architect within **seven** days if Contractor disagrees with response.

1.8 PROJECT MEETINGS

A. General: Schedule and conduct meetings and conferences at Project site unless otherwise indicated.

1. Attendees: Inform participants and others involved, and individuals whose presence is required, of date and time of each meeting. Notify Owner and Architect of scheduled meeting dates and times.
2. Agenda: Prepare the meeting agenda. Distribute the agenda to all invited attendees.
3. Minutes: Entity responsible for conducting meeting will record significant discussions and agreements achieved. Distribute the meeting minutes to everyone concerned, including Owner and Architect, within three days of the meeting.

B. Preconstruction Conference: Architect will schedule and conduct a preconstruction conference before starting construction, at a time convenient to Owner and Architect, but no later than 15 days after execution of the Agreement.

1. Conduct the conference to review responsibilities and personnel assignments.
2. Attendees: Authorized representatives of Owner**,** Architect, and their consultants; Contractor and its superintendent; major subcontractors; suppliers; and other concerned parties shall attend the conference. Participants at the conference shall be familiar with Project and authorized to conclude matters relating to the Work.
3. Agenda: Discuss items of significance that could affect progress, including the following:

a. Tentative construction schedule.
b. Phasing.
c. Critical work sequencing and long-lead items.
d. Designation of key personnel and their duties.
e. Lines of communications.
f. Procedures for processing field decisions and Change Orders.
g. Procedures for RFIs.
h. Procedures for testing and inspecting.
i. Procedures for processing Applications for Payment.
j. Distribution of the Contract Documents.
k. Submittal procedures.
l. Preparation of record documents.
m. Use of the premises.
n. Work restrictions.
o. Working hours.
p. Owner's occupancy requirements.
q. Responsibility for temporary facilities and controls.
r. Procedures for moisture and mold control.
s. Procedures for disruptions and shutdowns.
t. Construction waste management and recycling.
u. Parking availability.
v. Office, work, and storage areas.
w. Equipment deliveries and priorities.
x. First aid.
y. Security.
z. Progress cleaning.

4. Minutes: Entity responsible for conducting meeting will record and distribute meeting minutes.

C. Preinstallation Conferences: Contractor shall conduct a preinstallation conference at Project site before each construction activity that requires coordination with other construction.

1. Attendees: Installer and representatives of manufacturers and fabricators involved in or affected by the installation and its coordination or integration with other materials and installations that have preceded or will follow, shall attend the meeting. Advise Architect of scheduled meeting dates.
2. Agenda: Review progress of other construction activities and preparations for the particular activity under consideration, including requirements for the following:

   a. Contract Documents.
   b. Options.
   c. Related RFIs.
   d. Related Change Orders.
   e. Purchases.
   f. Deliveries.
   g. Submittals.
   h. Review of mockups.
   i. Possible conflicts.
   j. Compatibility requirements.
   k. Time schedules.
   l. Weather limitations.
   m. Manufacturer's written instructions.
   n. Warranty requirements.
   o. Compatibility of materials.
   p. Acceptability of substrates.
   q. Temporary facilities and controls.
   r. Space and access limitations.
   s. Regulations of authorities having jurisdiction.
   t. Testing and inspecting requirements.
   u. Installation procedures.
   v. Coordination with other work.
   w. Required performance results.
   x. Protection of adjacent work.
   y. Protection of construction and personnel.

3. Record significant conference discussions, agreements, and disagreements, including required corrective measures and actions.
4. Reporting: Distribute minutes of the meeting to each party present and to other parties requiring information.
5. Do not proceed with installation if the conference cannot be successfully concluded. Initiate whatever actions are necessary to resolve impediments to performance of the Work and reconvene the conference at earliest feasible date.

D. Project Closeout Conference: Schedule and conduct a project closeout conference, at a time convenient to Owner and Architect, but no later than 90 days prior to the scheduled date of Substantial Completion.

1. Conduct the conference to review requirements and responsibilities related to Project closeout.
2. Attendees: Authorized representatives of Owner, Architect, and their consultants; Contractor and its superintendent; major subcontractors; suppliers; and other concerned parties shall attend the meeting. Participants at the meeting shall be familiar with Project and authorized to conclude matters relating to the Work.
3. Agenda: Discuss items of significance that could affect or delay Project closeout, including the following:

    a. Preparation of record documents.
    b. Procedures required prior to inspection for Substantial Completion and for final inspection for acceptance.
    c. Submittal of written warranties.
    d. Requirements for preparing operations and maintenance data.
    e. Requirements for delivery of material samples, attic stock, and spare parts.
    f. Requirements for demonstration and training.
    g. Preparation of Contractor's punch list.
    h. Procedures for processing Applications for Payment at Substantial Completion and for final payment.
    i. Submittal procedures.
    j. Coordination of separate contracts.
    k. Owner's partial occupancy requirements.
    l. Installation of Owner's furniture, fixtures, and equipment.
    m. Responsibility for removing temporary facilities and controls.

4. Minutes: Entity conducting meeting will record and distribute meeting minutes.

E. Progress Meetings: Conduct progress meetings at regular intervals.

1. Coordinate dates of meetings with preparation of payment requests.
2. Attendees: In addition to representatives of Owner and Architect, each contractor, subcontractor, supplier, and other entity concerned with current progress or involved in planning, coordination, or performance of future activities shall be represented at these meetings. All participants at the meeting shall be familiar with Project and authorized to conclude matters relating to the Work.
3. Agenda: Review and correct or approve minutes of previous progress meeting. Review other items of significance that could affect progress. Include topics for discussion as appropriate to status of Project.

    a. Contractor's Construction Schedule: Review progress since the last meeting. Determine whether each activity is on time, ahead of schedule, or behind schedule, in relation to Contractor's construction schedule. Determine how construction behind schedule will be expedited; secure commitments from parties involved to do so. Discuss whether schedule revisions are required to ensure that current and subsequent activities will be completed within the Contract Time.

        1) Review schedule for next period.

    b. Review present and future needs of each entity present, including the following:

        1) Interface requirements.

2) Sequence of operations.
3) Status of submittals.
4) Deliveries.
5) Off-site fabrication.
6) Access.
7) Site utilization.
8) Temporary facilities and controls.
9) Progress cleaning.
10) Quality and work standards.
11) Status of correction of deficient items.
12) Field observations.
13) Status of RFIs.
14) Status of proposal requests.
15) Pending changes.
16) Status of Change Orders.
17) Pending claims and disputes.
18) Documentation of information for payment requests.

4. Minutes: Entity responsible for conducting the meeting will record and distribute the meeting minutes to each party present and to parties requiring information.

   a. Schedule Updating: Revise Contractor's construction schedule after each progress meeting where revisions to the schedule have been made or recognized. Issue revised schedule concurrently with the report of each meeting.

PART 2 - PRODUCTS (Not Used)

PART 3 - EXECUTION (Not Used)

END OF SECTION 013100

SECTION 013200 - CONSTRUCTION PROGRESS DOCUMENTATION

PART 1 - GENERAL

1.1 RELATED DOCUMENTS

A. Drawings and general provisions of the Contract, including General and Supplementary Conditions and other Division 1 Specification Sections, apply to this Section.

1.2 SUMMARY

A. This Section includes administrative and procedural requirements for documenting the progress of construction during performance of the Work, including the following:

1. Preliminary Construction Schedule.

2. Contractor's Construction Schedule.

3. Submittals Schedule.

4. Daily construction reports.

5. Material location reports.

6. Field condition reports.

7. Special reports.

B. Related Sections include the following:

1. Division 1 Section "Project Management and Coordination" for submitting and distributing meeting and conference minutes.

2. Division 1 Section "Submittal Procedures" for submitting schedules and reports.

1.3 SUBMITTALS

A. Submittals Schedule: Submit three copies of schedule. Arrange the following information in a tabular format:

1. Scheduled date for first submittal.

2. Specification Section number and title.

3. Submittal category (action or informational).

4. Name of subcontractor.

5. Description of the Work covered.

6. Scheduled date for Architect's final release or approval.

B. Preliminary Construction Schedule: Submit four opaque copies.

1. Approval of cost-loaded preliminary construction schedule will not constitute approval of Schedule of Values for cost-loaded activities.

C. Contractor's Construction Schedule: Submit four opaque copies of initial schedule, large enough to show entire schedule for entire construction period.

D. Daily Construction Reports: Submit four copies at weekly intervals.

E. Field Condition Reports: Submit four copies at time of discovery of differing conditions.

F. Special Reports: Submit four copies at time of unusual event.

1.4 COORDINATION

A. Coordinate preparation and processing of schedules and reports with performance of construction activities and with scheduling and reporting of separate contractors.

B. Coordinate Contractor's Construction Schedule with the Schedule of Values, list of subcontracts, Submittals Schedule, progress reports, payment requests, and other required schedules and reports.

1. Secure time commitments for performing critical elements of the Work from parties involved.

PART 2 - PRODUCTS

2.1 SUBMITTALS SCHEDULE

A. Preparation: Submit a schedule of submittals, arranged in chronological order by dates required by construction schedule. Include time required for review, resubmittal, ordering, manufacturing, fabrication, and delivery when establishing dates.

1. Coordinate Submittals Schedule with list of subcontracts, the Schedule of Values, and Contractor's Construction Schedule.

2. Initial Submittal: Submit concurrently with preliminary bar-chart schedule. Include submittals required during the first 60 days of construction. List those required to maintain orderly progress of the Work and those required early because of long lead time for manufacture or fabrication.

3. Final Submittal: Submit concurrently with the first complete submittal of Contractor's Construction Schedule.

2.2 CONTRACTOR'S CONSTRUCTION SCHEDULE, GENERAL

A. Procedures: Comply with procedures contained in AGC's "Construction Planning & Scheduling."

B. Cost Correlation: At the head of schedule, provide a cost correlation line, indicating planned and actual costs. On the line, show dollar volume of the Work performed as of dates used for preparation of payment requests.

1. Each activity cost shall reflect an accurate value subject to approval by Architect.

2. Total cost assigned to activities shall equal the total Contract Sum.

C. Contract Modifications: For each proposed contract modification and concurrent with its submission, prepare a time-impact analysis to demonstrate the effect of the proposed change on the overall project schedule.

2.3 CONSTRUCTION SCHEDULE

A. Bar-Chart Schedule: Submit horizontal bar-chart-type construction schedule within seven days of date established for the Notice to Proceed.

B. Preparation: Indicate each significant construction activity separately. Identify first workday of each week with a continuous vertical line. Outline significant construction activities for entire project.

2.4 REPORTS

A. Daily Construction Reports: Prepare a daily construction report recording the following information concerning events at Project site:

1. List of subcontractors at Project site.

2. List of separate contractors at Project site.

3. Approximate count of personnel at Project site.

4. Equipment at Project site.

5. Material deliveries.

6. High and low temperatures and general weather conditions.

7. Accidents.

8. Meetings and significant decisions.

9. Unusual events (refer to special reports).

10. Stoppages, delays, shortages, and losses.

11. Meter readings and similar recordings.

12. Emergency procedures.

13. Orders and requests of authorities having jurisdiction.

14. Change Orders received and implemented.

15. Work Change Directives received and implemented.

16. Services connected and disconnected.

17. Equipment or system tests and startups.

18. Partial Completions and occupancies.

19. Substantial Completions authorized.

B. Field Condition Reports: Immediately on discovery of a difference between field conditions and the Contract Documents, prepare and submit a detailed report. Submit with a request for interpretation. Include a detailed description of the differing conditions, together with recommendations for changing the Contract Documents.

2.5 SPECIAL REPORTS

A. General: Submit special reports directly to Owner within one day(s) of an occurrence. Distribute copies of report to parties affected by the occurrence.

B. Reporting Unusual Events: When an event of an unusual and significant nature occurs at Project site, whether or not related directly to the Work, prepare and submit a special report. List chain of events, persons participating, response by Contractor's personnel, evaluation of results or effects, and similar pertinent information. Advise Owner in advance when these events are known or predictable.

PART 3 - EXECUTION

3.1 CONTRACTOR'S CONSTRUCTION SCHEDULE

A. Contractor's Construction Schedule Updating: At monthly intervals, update schedule to reflect actual construction progress and activities.

1. Revise schedule immediately after each meeting or other activity where revisions have been recognized or made. Issue updated schedule concurrently with the report of each such meeting.

2. As the Work progresses, indicate Actual Completion percentage for each activity.

B. Distribution: Distribute copies of approved schedule to Architect, Owner, separate contractors, testing and inspecting agencies, and other parties identified by Contractor with a need-to-know schedule responsibility.

END OF SECTION 013200

SECTION 013300 - SUBMITTAL PROCEDURES

PART 1 - GENERAL

1.1 RELATED DOCUMENTS

A. Drawings and general provisions of the Contract, including General and Supplementary Conditions and other Division 1 Specification Sections, apply to this Section.

1.2 SUMMARY

A. This Section includes administrative and procedural requirements for submitting Shop Drawings, Product Data, Samples, and other miscellaneous submittals.

B. Related Sections include the following:

1. Division 1 Section "Closeout Procedures" for submitting warranties, Project Record Documents and operation and maintenance manuals.

1.3 DEFINITIONS

A. Action Submittals: Written and graphic information that requires Architect's responsive action.

B. Informational Submittals: Written information that does not require Architect's approval. Submittals may be rejected for not complying with requirements.

1.4 SUBMITTAL PROCEDURES

A. General: Electronic copies of CAD Drawings of the Contract Drawings will not be provided by Architect for Contractor's use in preparing submittals.

B. Coordination: Coordinate preparation and processing of submittals with performance of construction activities.

1. Coordinate each submittal with fabrication, purchasing, testing, delivery, other submittals, and related activities that require sequential activity.

2. Coordinate transmittal of different types of submittals for related parts of the Work so processing will not be delayed because of need to review submittals concurrently for coordination.

a. Architect reserves the right to withhold action on a submittal requiring coordination with other submittals until related submittals are received.

C. Submittals Schedule: Comply with requirements in Division 1 Section "Construction Progress Documentation" for list of submittals and time requirements for scheduled performance of related construction activities.

D. Processing Time: Allow enough time for submittal review, including time for resubmittals, as follows. Time for review shall commence on Architect’s receipt of submittal.

1. Initial Review: Allow 15 days for initial review of each submittal. Allow additional time if processing must be delayed to permit coordination with subsequent submittals. Architect will advise Contractor when a submittal being processed must be delayed for coordination.

2. Concurrent Review: Where concurrent review of submittals by Architect's consultants, Owner, or other parties is required, allow 21 days for initial review of each submittal.

3. Direct Transmittal to Consultant: Where the Contract Documents indicate that submittals may be transmitted directly to Architect's consultants, provide duplicate copy of transmittal to Architect. Submittal will be returned to Architect before being returned to Contractor.

4. If intermediate submittal is necessary, process it in same manner as initial submittal.

5. Allow 15 days for processing each re-submittal.

6. No extension of the Contract Time will be authorized because of failure to transmit submittals enough in advance of the Work to permit processing.

E. Identification: Place a permanent label or title block on each submittal for identification.

1. Indicate name of firm or entity that prepared each submittal on label or title block.

2. Include the following information on label for processing and recording action taken:

a. Project name.

b. Date.

c. Name and address of Architect.

d. Name and address of Contractor.

e. Name and address of subcontractor.

f. Name and address of supplier.

g. Name of manufacturer.

h. Unique identifier, including revision number.

i. Number and title of appropriate Specification Section.

j. Drawing number and detail references, as appropriate.

k. Other necessary identification.

F. Deviations: Highlight, encircle, or otherwise identify deviations from the Contract Documents on submittals.

G. Additional Copies: Unless additional copies are required for final submittal, and unless Architect observes noncompliance with provisions of the Contract Documents, initial submittal may serve as final submittal.

1. Submit one copy of submittal to concurrent reviewer in addition to specified number of copies to Architect.

2. Additional copies submitted for maintenance manuals will not be marked with action taken and will be returned.

H. Transmittal: Package each submittal individually and appropriately for transmittal and handling. Transmit each submittal using a transmittal form. Architect will discard submittals received from sources other than Contractor.

1. On an attached separate sheet, prepared on Contractor's letterhead, record relevant information, requests for data, revisions other than those requested by Architect on previous submittals, and deviations from requirements of the Contract Documents, including minor variations and limitations. Include the same label information as the related submittal.

2. Include Contractor's certification stating that information submitted complies with requirements of the Contract Documents.

3. Transmittal Form: Provide locations on form for the following information:

a. Project name.

b. Date.

c. Destination (To:).

d. Source (From:).

e. Names of subcontractor, manufacturer, and supplier.

f. Category and type of submittal.

g. Submittal purpose and description.

h. Submittal and transmittal distribution record.

i. Remarks.

j. Signature of transmitter.

I. Distribution: Furnish copies of final submittals to manufacturers, subcontractors, suppliers, fabricators, installers, authorities having jurisdiction, and others as necessary for performance of construction activities. Show distribution on transmittal forms.

J. Use for Construction: Use only final submittals with mark indicating action taken by Architect in connection with construction.

PART 2 - PRODUCTS

2.1 ACTION SUBMITTALS

A. General: Prepare and submit Action Submittals required by individual Specification Sections.

1. Number of Copies: Submit 3 more copies than number Contractor will need for his purposes . Mark up and retain one returned copy as a Project Record Document.

B. Product Data: Collect information into a single submittal for each element of construction and type of product or equipment.

1. If information must be specially prepared for submittal because standard printed data are not suitable for use, submit as Shop Drawings, not as Product Data.

2. Mark each copy of each submittal to show which products and options are applicable.

3. Include the following information, as applicable:

a. Manufacturer's written recommendations.

b. Manufacturer's product specifications.

c. Manufacturer's installation instructions.

d. Standard color charts.

e. Manufacturer's catalog cuts.

f. Wiring diagrams showing factory-installed wiring.

g. Printed performance curves.

h. Operational range diagrams.

i. Mill reports.

j. Standard product operating and maintenance manuals.

k. Compliance with recognized trade association standards.

l. Compliance with recognized testing agency standards.

m. Application of testing agency labels and seals.

n. Notation of coordination requirements.

C. Shop Drawings: Prepare Project-specific information, drawn accurately to scale. Do not base Shop Drawings on reproductions of the Contract Documents or standard printed data.

1. Preparation: Include the following information, as applicable:

a. Dimensions.

b. Identification of products.

c. Fabrication and installation drawings.

d. Roughing-in and setting diagrams.

e. Wiring diagrams showing field-installed wiring, including power, signal, and control wiring.

f. Shopwork manufacturing instructions.

g. Templates and patterns.

h. Schedules.

i. Design calculations.

j. Compliance with specified standards.

k. Notation of coordination requirements.

l. Notation of dimensions established by field measurement.

2. Wiring Diagrams: Differentiate between manufacturer-installed and field-installed wiring.

3. Sheet Size: Except for templates, patterns, and similar full-size drawings, submit Shop Drawings on sheets at least 8-1/2 by 11 inches (215 by 280 mm) but no larger than 30 by 40 inches (750 by 1000 mm).

4. Number of Copies: Submit one correctable, translucent, reproducible print and 3 blue- or black-line print of each submittal. Architect will return the reproducible print.

D. Samples: Prepare physical units of materials or products, including the following:

1. Samples for Initial Selection: Submit manufacturer's color charts consisting of units or sections of units showing the full range of colors, textures, and patterns available.

2. Samples for Verification: Submit full-size units or Samples of size indicated, prepared from the same material to be used for the Work, cured and finished in manner specified, and physically identical with the product proposed for use, and that show full range of color and texture variations expected. Samples include, but are not limited to, the following: partial sections of manufactured or fabricated components; small cuts or containers of materials; complete units of repetitively used materials; swatches showing color, texture, and pattern; color range sets; and components used for independent testing and inspection.

3. Preparation: Mount, display, or package Samples in manner specified to facilitate review of qualities indicated. Prepare Samples to match Architect's sample where so indicated. Attach label on unexposed side that includes the following:

a. Generic description of Sample.

b. Product name or name of manufacturer.

c. Sample source.

4. Additional Information: On an attached separate sheet, prepared on Contractor's letterhead, provide the following:

a. Size limitations.

b. Compliance with recognized standards.

c. Availability.

d. Delivery time.

5. Submit Samples for review of kind, color, pattern, and texture for a final check of these characteristics with other elements and for a comparison of these characteristics between final submittal and actual component as delivered and installed.

a. If variation in color, pattern, texture, or other characteristic is inherent in the product represented by a Sample, submit at least three sets of paired units that show approximate limits of the variations.

b. Refer to individual Specification Sections for requirements for Samples that illustrate workmanship, fabrication techniques, details of assembly, connections, operation, and similar construction characteristics.

6. Number of Samples for Initial Selection: Submit one full set of available choices where color, pattern, texture, or similar characteristics are required to be selected from manufacturer's product line. Architect will return submittal with options selected.

7. Disposition: Maintain sets of approved Samples at Project site, available for quality-control comparisons throughout the course of construction activity. Sample sets may be used to determine final acceptance of construction associated with each set.

a. Samples that may be incorporated into the Work are indicated in individual Specification Sections. Such Samples must be in an undamaged condition at time of use.

b. Samples not incorporated into the Work, or otherwise designated as Owner's property, are the property of Contractor.

E. Product Schedule or List: Prepare a written summary indicating types of products required for the Work and their intended location. Include the following information in tabular form:

1. Type of product. Include unique identifier for each product.

2. Number and name of room or space.

3. Location within room or space.

F. Subcontract List: Prepare a written summary identifying individuals or firms proposed for each portion of the Work, including those who are to furnish products or equipment fabricated to a special design. Include the following information in tabular form:

1. Name, address, and telephone number of entity performing subcontract or supplying products.

2. Number and title of related Specification Section(s) covered by subcontract.

3. Drawing number and detail references, as appropriate, covered by subcontract.

2.2 INFORMATIONAL SUBMITTALS

A. General: Prepare and submit Informational Submittals required by other Specification Sections.

1. Number of Copies: Submit two copies of each submittal, unless otherwise indicated. Architect will not return copies.

2. Certificates and Certifications: Provide a notarized statement that includes signature of entity responsible for preparing certification. Certificates and certifications shall be signed by an officer or other individual authorized to sign documents on behalf of that entity.

3. Test and Inspection Reports: Comply with requirements in individual sections.

B. Contractor's Construction Schedule: Comply with requirements in Owner’s General Conditions.

C. Qualification Data: Prepare written information that demonstrates capabilities and experience of firm or person. Include lists of completed projects with project names and addresses, names and addresses of architects and owners, and other information specified.

D. Product Certificates: Prepare written statements on manufacturer's letterhead certifying that product complies with requirements.

E. Welding Certificates: Prepare written certification that welding procedures and personnel comply with requirements. Submit record of Welding Procedure Specification (WPS) and Procedure Qualification Record (PQR) on AWS forms. Include names of firms and personnel certified.

F. Installer Certificates: Prepare written statements on manufacturer's letterhead certifying that Installer complies with requirements and, where required, is authorized for this specific Project.

G. Manufacturer Certificates: Prepare written statements on manufacturer's letterhead certifying that manufacturer complies with requirements. Include evidence of manufacturing experience where required.

H. Material Certificates: Prepare written statements on manufacturer's letterhead certifying that material complies with requirements.

I. Material Test Reports: Prepare reports written by a qualified testing agency, on testing agency's standard form, indicating and interpreting test results of material for compliance with requirements.

J. Preconstruction Test Reports: Prepare reports written by a qualified testing agency, on testing agency's standard form, indicating and interpreting results of tests performed before installation of product, for compliance with performance requirements.

K. Compatibility Test Reports: Prepare reports written by a qualified testing agency, on testing agency's standard form, indicating and interpreting results of compatibility tests performed before installation of product. Include written recommendations for primers and substrate preparation needed for adhesion.

L. Field Test Reports: Prepare reports written by a qualified testing agency, on testing agency's standard form, indicating and interpreting results of field tests performed either during installation of product or after product is installed in its final location, for compliance with requirements.

M. Product Test Reports: Prepare written reports indicating current product produced by manufacturer complies with requirements. Base reports on evaluation of tests performed by manufacturer and witnessed by a qualified testing agency, or on comprehensive tests performed by a qualified testing agency.

N. Research/Evaluation Reports: Prepare written evidence, from a model code organization acceptable to authorities having jurisdiction, that product complies with building code in effect for Project. Include the following information:

1. Name of evaluation organization.

2. Date of evaluation.

3. Time period when report is in effect.

4. Product and manufacturers' names.

5. Description of product.

6. Test procedures and results.

7. Limitations of use.

O. Maintenance Data: Prepare written and graphic instructions and procedures for operation and normal maintenance of products and equipment. Comply with requirements in Division 1 Section "Closeout Procedures”.

P. Design Data: Prepare written and graphic information, including, but not limited to, performance and design criteria, list of applicable codes and regulations, and calculations. Include list of assumptions and other performance and design criteria and a summary of loads. Include load diagrams if applicable. Provide name and version of software, if any, used for calculations. Include page numbers.

Q. Manufacturer's Instructions: Prepare written or published information that documents manufacturer's recommendations, guidelines, and procedures for installing or operating a product or equipment. Include name of product and name, address, and telephone number of manufacturer. Include the following, as applicable:

1. Preparation of substrates.

2. Required substrate tolerances.

3. Sequence of installation or erection.

4. Required installation tolerances.

5. Required adjustments.

6. Recommendations for cleaning and protection.

R. Manufacturer's Field Reports: Prepare written information documenting factory-authorized service representative's tests and inspections. Include the following, as applicable:

1. Name, address, and telephone number of factory-authorized service representative making report.

2. Statement on condition of substrates and their acceptability for installation of product.

3. Statement that products at Project site comply with requirements.

4. Summary of installation procedures being followed, whether they comply with requirements and, if not, what corrective action was taken.

5. Results of operational and other tests and a statement of whether observed performance complies with requirements.

6. Statement whether conditions, products, and installation will affect warranty.

7. Other required items indicated in individual Specification Sections.

S. Insurance Certificates and Bonds: Prepare written information indicating current status of insurance or bonding coverage. Include name of entity covered by insurance or bond, limits of coverage, amounts of deductibles, if any, and term of the coverage.

T. Material Safety Data Sheets: Submit information directly to Owner. If submitted to Architect, Architect will not review this information but will return it with no action taken.

PART 3 - EXECUTION

3.1 CONTRACTOR'S REVIEW

A. Review each submittal and check for compliance with the Contract Documents. Note corrections and field dimensions. Mark with approval stamp before submitting to Architect.

B. Approval Stamp: Stamp each submittal with a uniform, approval stamp. Include Project name and location, submittal number, Specification Section title and number, name of reviewer, date of Contractor's approval, and statement certifying that submittal has been reviewed, checked, and approved for compliance with the Contract Documents.

3.2 ARCHITECT'S ACTION

A. General: Architect will not review submittals that do not bear Contractor's approval stamp and will return them without action.

B. Action Submittals: Architect will review each submittal, make marks to indicate corrections or modifications required, and return it. Architect will stamp each submittal with an action stamp and will mark stamp appropriately to indicate action taken, as follows:

C. Action Stamp: The Architect will stamp each submittal with a uniform, action stamp. The Architect will mark the stamp appropriately to indicate the action taken, as follows:

1. Final Unrestricted Release: When the Architect marks a submittal "Reviewed, No Exceptions Taken," the Work covered by the submittal may proceed provided it complies with requirements of the Contract Documents. Final payment depends on that compliance.

2. Final-But-Restricted Release: When the Architect marks a submittal "Reviewed, Exceptions as Noted," the Work covered by the submittal may proceed provided it complies with notations or corrections on the submittal and requirements of the Contract Documents. Final payment depends on that compliance.

3. Returned for Resubmittal: When the Architect marks a submittal "Reviewed, Not Acceptable, Revise and Resubmit," do not proceed with Work covered by the submittal, including purchasing, fabrication, delivery, or other activity. Revise or prepare a new submittal according to the notations; resubmit without delay. Repeat if necessary to obtain different action mark.

a. Do not use, or allow others to use, submittals marked "Not Acceptable, Revise and Resubmit" at the Project Site or elsewhere where Work is in progress.

D. Informational Submittals: Architect will review each submittal and will not return it, or will reject and return it if it does not comply with requirements. Architect will forward each submittal to appropriate party.

E. Submittals not required by the Contract Documents will not be reviewed and may be discarded.

END OF SECTION 013300

SECTION 013516 - ALTERATION PROJECT PROCEDURES

PART 1 - GENERAL

1.1 RELATED DOCUMENTS

A. Drawings and general provisions of the Contract, including General and Supplementary Conditions and Division 01 Specification Sections, apply to this Section.

1.2 SUMMARY

A. Section includes special procedures for alteration work.

1.3 DEFINITIONS

A. Alteration Work: This term includes remodeling, renovation, repair, and maintenance work performed within existing spaces or on existing surfaces as part of the Project.

B. Consolidate: To strengthen loose or deteriorated materials in place.

C. Design Reference Sample: A sample that represents the Architect's prebid selection of work to be matched; it may be existing work or work specially produced for the Project.

D. Dismantle: To remove by disassembling or detaching an item from a surface, using gentle methods and equipment to prevent damage to the item and surfaces; disposing of items unless indicated to be salvaged or reinstalled.

E. Match: To blend with adjacent construction and manifest no apparent difference in material type, species, cut, form, detail, color, grain, texture, or finish; as approved by Architect.

F. Refinish: To remove existing finishes to base material and apply new finish to match original, or as otherwise indicated.

G. Repair: To correct damage and defects, retaining existing materials, features, and finishes. This includes patching, piecing-in, splicing, consolidating, or otherwise reinforcing or upgrading materials.

H. Replace: To remove, duplicate, and reinstall entire item with new material. The original item is the pattern for creating duplicates unless otherwise indicated.

I. Replicate: To reproduce in exact detail, materials, and finish unless otherwise indicated.

J. Reproduce: To fabricate a new item, accurate in detail to the original, and from either the same or a similar material as the original, unless otherwise indicated.

K. Retain: To keep existing items that are not to be removed or dismantled.

L. Strip: To remove existing finish down to base material unless otherwise indicated.

1.4 COORDINATION

A. Alteration Work Subschedule: A construction schedule coordinating the sequencing and scheduling of alteration work for entire Project, including each activity to be performed, and based on Contractor's Construction Schedule. Secure time commitments for performing critical construction activities from separate entities responsible for alteration work.

1. Schedule construction operations in sequence required to obtain best Work results.
2. Coordinate sequence of alteration work activities to accommodate the following:

a. Owner's continuing occupancy of portions of existing building.
b. Owner's partial occupancy of completed Work.
c. Other known work in progress.
d. Tests and inspections.

3. Detail sequence of alteration work, with start and end dates.
4. Utility Services: Indicate how long utility services will be interrupted. Coordinate shutoff, capping, and continuation of utility services.
5. Use of elevator and stairs.
6. Equipment Data: List gross loaded weight, axle-load distribution, and wheel-base dimension data for mobile and heavy equipment proposed for use in existing structure. Do not use such equipment without certification from Contractor's professional engineer that the structure can support the imposed loadings without damage.

B. Pedestrian and Vehicular Circulation: Coordinate alteration work with circulation patterns within Project building and site. Some work is near circulation patterns and adjacent to restricted areas. Circulation patterns cannot be closed off entirely and in places can be only temporarily redirected around small areas of work. Access to restricted areas may not be obstructed. Plan and execute the Work accordingly.

1.5 MATERIALS OWNERSHIP

A. Historic items, relics, and similar objects including, but not limited to, cornerstones and their contents, commemorative plaques and tablets, antiques, and other items of interest or value to Owner that may be encountered or uncovered during the Work, regardless of whether they were previously documented, remain Owner's property.

1. Carefully dismantle and salvage each item or object in a manner to prevent damage and protect it from damage, then promptly deliver it to Owner where directed.

1.6 INFORMATIONAL SUBMITTALS

A. Alteration Work Subschedule:

1. Submit alteration work subschedule within seven [7] days of date established for commencement of alteration work.

B. Preconstruction Documentation: Show preexisting conditions of adjoining construction and site improvements that are to remain, including finish surfaces, that might be misconstrued as damage caused by Contractor's alteration work operations.

C. Fire-Prevention Plan: Submit 15 days before work begins.

1.7 QUALITY ASSURANCE

A. Show compliance with indicated methods and procedures specified in this and other Sections. Coordinate this whole-Project alteration work program with specific requirements of programs required in other alteration work Sections.

1. Dust and Noise Control: Include locations of proposed temporary dust- and noise-control partitions and means of egress from occupied areas coordinated with continuing on-site operations and other known work in progress.
2. Debris Hauling: Include plans clearly marked to show debris hauling routes, turning radii, and locations and details of temporary protective barriers.

B. Fire-Prevention Plan: Prepare a written plan for preventing fires during the Work, including placement of fire extinguishers, fire blankets, rag buckets, and other fire-control devices during each phase or process. Coordinate plan with Owner's fire-protection equipment and requirements. Include fire-watch personnel's training, duties, and authority to enforce fire safety.

C. Safety and Health Standard: Comply with ANSI/ASSE A10.6.

1.8 STORAGE AND HANDLING OF SALVAGED MATERIALS

A. Salvaged Materials:

1. Clean loose dirt and debris from salvaged items unless more extensive cleaning is indicated.
2. Pack or crate items after cleaning; cushion against damage during handling. Label contents of containers.
3. Store items in a secure area until delivery to Owner.
4. Transport items to Owner's storage area designated by Owner.
5. Protect items from damage during transport and storage.

B. Salvaged Materials for Reinstallation:

1. Repair and clean items for reuse as indicated.
2. Pack or crate items after cleaning and repairing; cushion against damage during handling. Label contents of containers.
3. Protect items from damage during transport and storage.
4. Reinstall items in locations indicated. Comply with installation requirements for new materials and equipment unless otherwise indicated. Provide connections, supports, and miscellaneous materials to make items functional for use indicated.

C. Existing Materials to Remain: Protect construction indicated to remain against damage and soiling from construction work. Where permitted by Architect, items may be dismantled and taken to a suitable, protected storage location during construction work and reinstalled in their original locations after alteration and other construction work in the vicinity is complete.

D. Storage: Catalog and store items within a weathertight enclosure where they are protected from moisture, weather, condensation, and freezing temperatures.

1. Identify each item for reinstallation with a nonpermanent mark to document its original location. Indicate original locations on plans, elevations, sections, or photographs by annotating the identifying marks.
2. Secure stored materials to protect from theft.
3. Control humidity so that it does not exceed 85 percent. Maintain temperatures 5 deg F (3 deg C) or more above the dew point.

E. Storage Space:

1. Owner will arrange for limited on-site location(s) for free storage of salvaged material. This storage space does not include security for stored material.
2. Arrange for off-site locations for storage and protection of salvaged material that cannot be stored and protected on-site.

1.9 FIELD CONDITIONS

A. Survey of Existing Conditions: Record existing conditions that affect the Work by use of measured drawing, preconstruction photographs and preconstruction videotapes.

B. Discrepancies: Notify Architect of discrepancies between existing conditions and Drawings before proceeding with removal and dismantling work.

C. Owner's Removals: Before beginning alteration work, verify in correspondence with Owner that the following items have been removed:

1. Items indicated to be removed by Owner.

D. Size Limitations in Existing Spaces: Materials, products, and equipment used for performing the Work and for transporting debris, materials, and products shall be of sizes that clear surfaces within existing spaces, areas, rooms, and openings, including temporary protection, by 12 inches (300 mm) or more.

PART 2 - PRODUCTS - (Not Used)

PART 3 - EXECUTION

3.1 PROTECTION

A. Protect persons, motor vehicles, surrounding surfaces of building, building site, plants, and surrounding buildings from harm resulting from alteration work.

1. Use only proven protection methods, appropriate to each area and surface being protected.
2. Provide temporary barricades, barriers, and directional signage to exclude the public from areas where alteration work is being performed.
3. Erect temporary barriers to form and maintain fire-egress routes.
4. Erect temporary protective covers over walkways and at points of pedestrian and vehicular entrance and exit that must remain in service during alteration work.
5. Contain dust and debris generated by alteration work, and prevent it from reaching the public or adjacent surfaces.
6. Provide shoring, bracing, and supports as necessary. Do not overload structural elements.
7. Protect floors and other surfaces along hauling routes from damage, wear, and staining.

B. Temporary Protection of Materials to Remain:

1. Protect existing materials with temporary protections and construction. Do not remove existing materials unless otherwise indicated.
2. Do not attach temporary protection to existing surfaces except as indicated as part of the alteration work program.

C. Comply with each product manufacturer's written instructions for protections and precautions. Protect against adverse effects of products and procedures on people and adjacent materials, components, and vegetation.

D. Utility and Communications Services:

1. Notify Owner, Architect, authorities having jurisdiction, and entities owning or controlling wires, conduits, pipes, and other services affected by alteration work before commencing operations.
2. Disconnect and cap pipes and services as required by authorities having jurisdiction, as required for alteration work.
3. Maintain existing services unless otherwise indicated; keep in service, and protect against damage during operations. Provide temporary services during interruptions to existing utilities.

E. Existing Drains: Prior to the start of work in an area, test drainage system to ensure that it is functioning properly. Notify Architect immediately of inadequate drainage or blockage. Do not begin work in an area until the drainage system is functioning properly.

1. Prevent solids such as adhesive or mortar residue or other debris from entering the drainage system. Clean out drains and drain lines that become sluggish or blocked by sand or other materials resulting from alteration work.
2. Protect drains from pollutants. Block drains or filter out sediments, allowing only clean water to pass.

F. Existing Roofing: Prior to the start of work in an area, install roofing protection to protect areas of existing roof to remain.

3.2 PROTECTION FROM FIRE

A. General: Follow fire-prevention plan and the following:

1. Comply with NFPA 241 requirements unless otherwise indicated.[**Perform** duties titled "Owner's Responsibility for Fire Protection."]
2. Remove and keep area free of combustibles, including rubbish, paper, waste, and chemicals, unless necessary for the immediate work.

    a. If combustible material cannot be removed, provide fire blankets to cover such materials.

B. Heat-Generating Equipment and Combustible Materials: Comply with the following procedures while performing work with heat-generating equipment or combustible materials, including welding, torch-cutting, soldering, brazing, removing paint with heat, or other operations where open flames or implements using high heat or combustible solvents and chemicals are anticipated:

1. Obtain Owner's approval for operations involving use of open-flame or welding or other high-heat equipment. Notify Owner at least 72 hours before each occurrence, indicating location of such work.
2. As far as practicable, restrict heat-generating equipment to shop areas or outside the building.
3. Do not perform work with heat-generating equipment in or near rooms or in areas where flammable liquids or explosive vapors are present or thought to be present. Use a combustible gas indicator test to ensure that the area is safe.
4. Use fireproof baffles to prevent flames, sparks, hot gases, or other high-temperature material from reaching surrounding combustible material.
5. Prevent the spread of sparks and particles of hot metal through open windows, doors, holes, and cracks in floors, walls, ceilings, roofs, and other openings.
6. Fire Watch: Before working with heat-generating equipment or combustible materials, station personnel to serve as a fire watch at each location where such work is performed. Fire-watch personnel shall have the authority to enforce fire safety. Station fire watch according to NFPA 51B, NFPA 241, and as follows:

    a. Train each fire watch in the proper operation of fire-control equipment and alarms.
    b. Prohibit fire-watch personnel from other work that would be a distraction from fire-watch duties.
    c. Cease work with heat-generating equipment whenever fire-watch personnel are not present.
    d. Have fire-watch personnel perform final fire-safety inspection each day beginning no sooner than 30 minutes after conclusion of work in each area to detect hidden or smoldering fires and to ensure that proper fire prevention is maintained.
    e. Maintain fire-watch personnel at each area of Project site until 60 minutes after conclusion of daily work.

C. Fire-Control Devices: Provide and maintain fire extinguishers, fire blankets, and rag buckets for disposal of rags with combustible liquids. Maintain each as suitable for the type of fire risk in each work area. Ensure that nearby personnel and the fire-watch personnel are trained in fire-extinguisher and blanket use.

D. Sprinklers: Where sprinkler protection exists and is functional, maintain it without interruption while operations are being performed. If operations are performed close to sprinklers, shield them temporarily with guards.

1. Remove temporary guards at the end of work shifts, whenever operations are paused, and when nearby work is complete.

3.3 PROTECTION DURING APPLICATION OF CHEMICALS

A. Protect motor vehicles, surrounding surfaces of building, building site, plants, and surrounding buildings from harm or spillage resulting from applications of chemicals and adhesives.

B. Cover adjacent surfaces with protective materials that are proven to resist chemicals selected for Project unless chemicals being used will not damage adjacent surfaces as indicated in alteration work program. Use covering materials and masking agents that are waterproof and UV resistant and that will not stain or leave residue on surfaces to which they are applied. Apply protective materials according to manufacturer's written instructions. Do not apply liquid masking agents or adhesives to painted or porous surfaces. When no longer needed, promptly remove protective materials.

C. Do not apply chemicals during winds of sufficient force to spread them to unprotected surfaces.

D. Neutralize alkaline and acid wastes and legally dispose of off Owner's property.

E. Collect and dispose of runoff from chemical operations by legal means and in a manner that prevents soil contamination, soil erosion, undermining of paving and foundations, damage to landscaping, or water penetration into building interior.

3.4 GENERAL ALTERATION WORK

A. Have specialty work performed only by qualified specialists.

B. Ensure that supervisory personnel are present when work begins and during its progress.

C. Perform surveys of Project site as the Work progresses to detect hazards resulting from alterations.

D. Notify Architect of visible changes in the integrity of material or components whether from environmental causes including biological attack, UV degradation, freezing, or thawing or from structural defects including cracks, movement, or distortion.

1. Do not proceed with the work in question until directed by Architect.

END OF SECTION 013516

SECTION 015000 - TEMPORARY FACILITIES AND CONTROLS

PART 1 - GENERAL

1.1 RELATED DOCUMENTS

A. Drawings and general provisions of the Contract, including General and Supplementary Conditions and other Division 01 Specification Sections, apply to this Section.

1.2 SUMMARY

A. Section includes requirements for temporary utilities, support facilities, and security and protection facilities.

B. Related Sections:

1. Division 01 Section "Summary" for work restrictions and limitations on utility interruptions.
2. Division 32 Section "Concrete Paving" for construction and maintenance of cement concrete pavement for temporary roads and paved areas.

1.3 USE CHARGES

A. General: Installation and removal of and use charges for temporary facilities shall be included in the Contract Sum unless otherwise indicated. Allow other entities to use temporary services and facilities without cost, including, but not limited to Architect, testing agencies, and authorities having jurisdiction. Use of Owner’s existing water and electric power service will be permitted.

B. Water Service: Use of Owner's existing water service facilities will be permitted, as long as facilities are cleaned and maintained in a condition acceptable to Owner.

C. Electric Power Service: Use of Owner's existing electric power service will be permitted, as long as facilities are cleaned and maintained in a condition acceptable to Owner.

1.4 INFORMATIONAL SUBMITTALS

A. Site Plan: Show temporary facilities, utility hookups, staging areas, and parking areas for construction personnel.

B. Erosion- and Sedimentation-Control Plan: Show compliance with requirements of EPA Construction General Permit or authorities having jurisdiction, using the most stringent.

C. Moisture-Protection Plan: Describe procedures and controls for protecting materials and construction from water absorption and damage, including delivery, handling, and storage provisions for materials subject to water absorption or water damage, discarding water-damaged

materials, protocols for mitigating water intrusion into completed Work, and replacing water damaged Work.

1. Indicate sequencing of work that requires water, such as sprayed fire-resistive materials, plastering, and terrazzo grinding, and describe plans for dealing with water from these operations. Show procedures for verifying that wet construction has dried sufficiently to permit installation of finish materials.

1.5 QUALITY ASSURANCE

A. Electric Service: Comply with NECA, NEMA, and UL standards and regulations for temporary electric service. Install service to comply with NFPA 70.

B. Tests and Inspections: Arrange for authorities having jurisdiction to test and inspect each temporary utility before use. Obtain required certifications and permits.

C. Accessible Temporary Egress: Comply with applicable provisions in the U.S. Architectural & Transportation Barriers Compliance Board's ADA-ABA Accessibility Guidelines and ICC/ANSI A117.1.

1.6 PROJECT CONDITIONS

A. Temporary Use of Permanent Facilities: Engage installer of each permanent service to assume responsibility for operation, maintenance, and protection of each permanent service during its use as a construction facility before Owner's acceptance, regardless of previously assigned responsibilities.

PART 2 - PRODUCTS

2.1 MATERIALS

A. Chain-Link Fencing: Minimum 2-inch (50-mm), 0.148-inch- (3.8-mm-) thick, galvanized steel, chain-link fabric fencing; minimum 6 feet (1.8 m) high with galvanized steel pipe posts; minimum 2-3/8-inch- (60-mm-) OD line posts and 2-7/8-inch- (73-mm-) OD corner and pull posts, with galvanized barbed-wire top strand.

B. Portable Chain-Link Fencing: Minimum 2-inch (50-mm), 0.148-inch- (3.8-mm-) thick, galvanized steel, chain-link fabric fencing; minimum 6 feet (1.8 m) high with galvanized steel pipe posts; minimum 2-3/8-inch- (60-mm-) OD line posts and 2-7/8-inch-(73-mm-) OD corner and pull posts, with 1-5/8-inch- (42-mm-) OD top and bottom rails. Provide galvanized steel bases for supporting posts.

C. Wood Enclosure Fence: Plywood, 6 feet (1.8 m) high, framed with four 2-by-4-inch (50-by-100-mm) rails, with preservative-treated wood posts spaced not more than 8 feet (2.4 m) apart.

D. Polyethylene Sheet: Reinforced, fire-resistive sheet, 10 mils (0.25 mm) minimum thickness, with flame-spread rating of 15 or less per ASTM E 84.

E. Dust Control Adhesive-Surface Walk-off Mats: Provide mats minimum 36 by 60 inches (914 by 1624 mm).

F. Insulation: Unfaced mineral-fiber blanket, manufactured from glass, slag wool, or rock wool; with maximum flame-spread and smoke-developed indexes of 25 and 50, respectively.

2.2 TEMPORARY FACILITIES

A. Field Office: El Paso International Airport (EPIA) will provide temporary office space within the existing Terminal Building. The field office may be relocated during the construction period as Airport Operations demand.

B. Field Office: Keep office clean and orderly. Furnish and equip offices as follows:

1. Furniture required for Project-site documents including file cabinets, plan tables, plan racks, and bookcases.
2. Drinking water and private toilet.
3. Coffee machine and supplies.
4. Heating and cooling equipment necessary to maintain a uniform indoor temperature of 68 to 72 deg F (20 to 22 deg C).
5. Lighting fixtures capable of maintaining average illumination of 20 fc (215 lx) at desk height.

C. Storage and Fabrication Sheds: Provide sheds sized, furnished, and equipped to accommodate materials and equipment for construction operations.

1. Store combustible materials apart from building.

2.3 EQUIPMENT

A. Fire Extinguishers: Portable, UL rated; with class and extinguishing agent as required by locations and classes of fire exposures.

B. HVAC Equipment: Unless Owner authorizes use of permanent HVAC system, provide vented, self-contained, liquid-propane-gas or fuel-oil heaters with individual space thermostatic control.

1. Use of gasoline-burning space heaters, open-flame heaters, or salamander-type heating units is prohibited.
2. Heating Units: Listed and labeled for type of fuel being consumed, by a testing agency acceptable to authorities having jurisdiction, and marked for intended use.
3. Permanent HVAC System: If Owner authorizes use of permanent HVAC system for temporary use during construction, provide filter with MERV of 8 at each return air grille in system and remove at end of construction and clean HVAC system as required in Division 01 Section "Closeout Procedures".

PART 3 - EXECUTION

3.1 INSTALLATION, GENERAL

A. Locate facilities where they will serve Project adequately and result in minimum interference with performance of the Work. Relocate and modify facilities as required by progress of the Work.

1. Locate facilities to limit site disturbance as specified in Division 01 Section "Summary."

B. Provide each facility ready for use when needed to avoid delay. Do not remove until facilities are no longer needed or are replaced by authorized use of completed permanent facilities.

3.2 TEMPORARY UTILITY INSTALLATION

A. General: Install temporary service or connect to existing service.

1. Arrange with utility company, Owner, and existing users for time when service can be interrupted, if necessary, to make connections for temporary services.

B. Water Service: Use of Owner's existing water service facilities will be permitted, as long as facilities are cleaned and maintained in a condition acceptable to Owner. At Substantial Completion, restore these facilities to condition existing before initial use.

1. Where installations below an outlet might be damaged by spillage or leakage, provide a drip pan of suitable size to minimize water damage. Drain accumulated water promptly from pans.

C. Sanitary Facilities: Provide temporary toilets, wash facilities, and drinking water for use of construction personnel. Comply with requirements of authorities having jurisdiction for type, number, location, operation, and maintenance of fixtures and facilities.

D. Heating: Provide temporary heating required by construction activities for curing or drying of completed installations or for protecting installed construction from adverse effects of cold temperatures.

E. Ventilation and Humidity Control: Provide temporary ventilation required by construction activities for curing or drying of completed installations or for protecting installed construction from adverse effects of high humidity. Select equipment that will not have a harmful effect on completed installations or elements being installed. Coordinate ventilation requirements to produce ambient condition required and minimize energy consumption.

1. Provide dehumidification systems when required to reduce substrate moisture levels to level required to allow installation or application of finishes.

A. Electric Power Service: Use of Owner's existing electric power service will be permitted, as long as facilities are cleaned and maintained in a condition acceptable to Owner. At Substantial Completion, restore these facilities to condition existing before initial use.

B. Lighting: Provide temporary lighting with local switching that provides adequate illumination for construction operations, observations, inspections, and traffic conditions.

1. Install and operate temporary lighting that fulfills security and protection requirements without operating entire system.

C. Telephone Service: Provide temporary telephone service in common-use facilities for use by all construction personnel. Install one telephone line(s) for each field office.

1. At each telephone, post a list of important telephone numbers.

a. Police and fire departments.
b. Ambulance service.
c. Contractor's home office.
d. Architect's office.
e. Engineers' offices.
f. Owner's office.
g. Principal subcontractors' field and home offices.

2. Provide superintendent with cellular telephone or portable two-way radio for use when away from field office.

D. Data: Contractor shall coordinate internet connectivity with EPIA to ensure security.

3.3 SUPPORT FACILITIES INSTALLATION

A. General: Comply with the following:

1. Provide construction for temporary offices, shops, and sheds located within construction area or within 30 feet (9 m) of building lines that is noncombustible according to ASTM E 136. Comply with NFPA 241.
2. Maintain support facilities until Architect schedules Substantial Completion inspection. Remove before Substantial Completion. Personnel remaining after Substantial Completion will be permitted to use permanent facilities, under conditions acceptable to Owner.

B. Temporary Roads and Paved Areas: Construct and maintain temporary roads and paved areas adequate for construction operations. Locate temporary roads and paved areas within construction limits indicated on Drawings.

1. Provide dust-control treatment that is nonpolluting and nontracking. Reapply treatment as required to minimize dust.

C. Traffic Controls: Comply with requirements of authorities having jurisdiction.

1. Maintain access for fire-fighting equipment and access to fire hydrants.

D. Parking: Provide temporary parking areas for construction personnel.

E. Dewatering Facilities and Drains: Comply with requirements of authorities having jurisdiction. Maintain Project site, excavations, and construction free of water.

1. Dispose of rainwater in a lawful manner that will not result in flooding Project or adjoining properties nor endanger permanent Work or temporary facilities.
2. Remove snow and ice as required to minimize accumulations.

F. Project Signs: Provide Project signs as indicated. Unauthorized signs are not permitted.

1. Identification Signs: Provide Project identification signs as indicated on Drawings.
2. Temporary Signs: Provide other signs as indicated and as required to inform public and individuals seeking entrance to Project.

a. Provide temporary, directional signs for construction personnel and visitors.

3. Maintain and touchup signs so they are legible at all times.

G. Waste Disposal Facilities: Comply with requirements specified in Division 01 Section "Construction Waste Management and Disposal."

H. Lifts and Hoists: Provide facilities necessary for hoisting materials and personnel.

1. Truck cranes and similar devices used for hoisting materials are considered "tools and equipment" and not temporary facilities.

3.4 SECURITY AND PROTECTION FACILITIES INSTALLATION

A. Environmental Protection: Provide protection, operate temporary facilities, and conduct construction as required to comply with environmental regulations and that minimize possible air, waterway, and subsoil contamination or pollution or other undesirable effects.

1. Comply with work restrictions specified in Division 01 Section "Summary."

B. Temporary Erosion and Sedimentation Control: Provide measures to prevent soil erosion and discharge of soil-bearing water runoff and airborne dust to undisturbed areas and to adjacent properties and walkways, according to erosion- and sedimentation-control Drawings and requirements of 2003 EPA Construction General Permit or authorities having jurisdiction, whichever is more stringent.

1. Verify that flows of water redirected from construction areas or generated by construction activity do not enter or cross tree- or plant- protection zones.
2. Inspect, repair, and maintain erosion- and sedimentation-control measures during construction until permanent vegetation has been established.
3. Clean, repair, and restore adjoining properties and roads affected by erosion and sedimentation from the project site during the course of the project.
4. Remove erosion and sedimentation controls and restore and stabilize areas disturbed during removal.

C. Stormwater Control: Comply with requirements of authorities having jurisdiction. Provide barriers in and around excavations and subgrade construction to prevent flooding by runoff of stormwater from heavy rains.

D. Pest Control: Engage pest-control service to recommend practices to minimize attraction and harboring of rodents, roaches, and other pests and to perform extermination and control procedures at regular intervals so Project will be free of pests and their residues at Substantial Completion. Obtain extended warranty for Owner. Perform control operations lawfully, using environmentally safe materials.

E. Site Enclosure Fence: Before construction operations begin, furnish and install site enclosure fence in a manner that will prevent people and animals from easily entering site except by entrance gates.

1. Extent of Fence: As required to enclose entire Project site or portion determined sufficient to accommodate construction operations.
2. Maintain security by limiting number of keys and restricting distribution to authorized personnel. Furnish one set of keys to Owner.

F. Security Enclosure and Lockup: Install temporary enclosure around partially completed areas of construction. Provide lockable entrances to prevent unauthorized entrance, vandalism, theft, and similar violations of security. Lock entrances at end of each work day.

G. Barricades, Warning Signs, and Lights: Comply with requirements of authorities having jurisdiction for erecting structurally adequate barricades, including warning signs and lighting.

H. Temporary Enclosures: Provide temporary enclosures for protection of construction, in progress and completed, from exposure, foul weather, other construction operations, and similar activities. Provide temporary weathertight enclosure for building exterior.

1. Where heating or cooling is needed and permanent enclosure is not complete, insulate temporary enclosures.

I. Temporary Fire Protection: Install and maintain temporary fire-protection facilities of types needed to protect against reasonably predictable and controllable fire losses. Comply with NFPA 241.

1. Prohibit smoking in construction areas.
2. Supervise welding operations, combustion-type temporary heating units, and similar sources of fire ignition according to requirements of authorities having jurisdiction.
3. Develop and supervise an overall fire-prevention and -protection program for personnel at Project site. Review needs with local fire department and establish procedures to be followed. Instruct personnel in methods and procedures. Post warnings and information.

3.5 MOISTURE AND MOLD CONTROL

A. Contractor's Moisture-Protection Plan: Avoid trapping water in finished work. Document visible signs of mold that may appear during construction.

B. Exposed Construction Phase: Before installation of weather barriers, when materials are subject to wetting and exposure and to airborne mold spores, protect as follows:

1. Protect porous materials from water damage.
2. Protect stored and installed material from flowing or standing water.

3. Keep porous and organic materials from coming into prolonged contact with concrete.
4. Remove standing water from decks.
5. Keep deck openings covered or dammed.

C. Partially Enclosed Construction Phase: After installation of weather barriers but before full enclosure and conditioning of building, when installed materials are still subject to infiltration of moisture and ambient mold spores, protect as follows:

1. Do not load or install drywall or other porous materials or components, or items with high organic content, into partially enclosed building.
2. Keep interior spaces reasonably clean and protected from water damage.
3. Periodically collect and remove waste containing cellulose or other organic matter.
4. Discard or replace water-damaged material.
5. Do not install material that is wet.
6. Discard, replace or clean stored or installed material that begins to grow mold.
7. Perform work in a sequence that allows any wet materials adequate time to dry before enclosing the material in drywall or other interior finishes.

D. Controlled Construction Phase of Construction: After completing and sealing of the building enclosure but prior to the full operation of permanent HVAC systems, maintain as follows:

1. Control moisture and humidity inside building by maintaining effective dry-in conditions.
2. Use permanent HVAC system to control humidity.
3. Comply with manufacturer's written instructions for temperature, relative humidity, and exposure to water limits.

   a. Hygroscopic materials that may support mold growth, including wood and gypsum-based products, that become wet during the course of construction and remain wet for 48hours are considered defective.
   b. Measure moisture content of materials that have been exposed to moisture during construction operations or after installation. Record daily readings over a forty-eight hour period. Identify materials containing moisture levels higher than allowed. Report findings in writing to Architect.
   c. Remove materials that can not be completely restored to their manufactured moisture level within 48 hours.

3.6 OPERATION, TERMINATION, AND REMOVAL

A. Supervision: Enforce strict discipline in use of temporary facilities. To minimize waste and abuse, limit availability of temporary facilities to essential and intended uses.

B. Maintenance: Maintain facilities in good operating condition until removal.

1. Maintain operation of temporary enclosures, heating, cooling, humidity control, ventilation, and similar facilities on a 24-hour basis where required to achieve indicated results and to avoid possibility of damage.

C. Temporary Facility Changeover: Do not change over from using temporary security and protection facilities to permanent facilities until Substantial Completion.

D. Termination and Removal: Remove each temporary facility when need for its service has ended, when it has been replaced by authorized use of a permanent facility, or no later than Substantial Completion. Complete or, if necessary, restore permanent construction that may have been delayed because of interference with temporary facility. Repair damaged Work, clean exposed surfaces, and replace construction that cannot be satisfactorily repaired.

1. Materials and facilities that constitute temporary facilities are property of Contractor. Owner reserves right to take possession of Project identification signs.
2. Remove temporary roads and paved areas not intended for or acceptable for integration into permanent construction. Where area is intended for landscape development, remove soil and aggregate fill that do not comply with requirements for fill or subsoil. Remove materials contaminated with road oil, asphalt and other petrochemical compounds, and other substances that might impair growth of plant materials or lawns. Repair or replace street paving, curbs, and sidewalks at temporary entrances, as required by authorities having jurisdiction.
3. At Substantial Completion, repair, renovate, and clean permanent facilities used during construction period. Comply with final cleaning requirements specified in Division 01 Section "Closeout Procedures."

END OF SECTION 015000

SECTION 015723 – TEMPORARY STORMWATER POLLUTION CONTROL

I. SILT FENCE

A. DESIGN CRITERIA

1. Silt fences are appropriate at the following general locations:

   a. Immediately upstream of the point(s) of runoff discharge from a site before flow becomes concentrated (maximum design flow rate should not exceed 0.5 cubic feet per second).

   b. Below disturbed areas where runoff may occur in the form of overland flow.

2. Ponding should not be allowed behind silt fences since they will collapse under high pressure; the design should provide sufficient outlets to prevent overtopping.

3. The drainage area should not exceed 0.25 acre per 100 feet of trench length.

4. For slopes between 1:50 (V):(H) and 1:5, the maximum allowable upstream flow path length to the fence is 100 feet; for slopes of 1:2 and steeper, the maximum is 20 feet.

5. The maximum upslope grade perpendicular to the fence line should not exceed 1:1.

6. Synthetic silt fences should be designed for 6 months of service; burlap is only acceptable for period of up to 60 days.

B. MATERIALS

1. Synthetic filter fabric should be a previous sheet of polypropylene, nylon, polyester or polyethylene yarn conforming to the requirements in Table 1 below.

TABLE 1 – SYNTHETIC FILTER FABRIC REQUIREMENTS

PHYSICAL PROPERTY	REQUIREMENTS
Filtering Efficiency	75% - 85% (minimum)
Tensile Strength at 20% (maximum elongations)	Standard Strength – 30 lb/linear inch (minimum) Extra Strength – 50 lb/linear inch (minimum)
Slurry Flow Rate	0.3 gal/ft^2/min (minimum)

2. Synthetic filter fabric should contain ultraviolet ray inhibitors and stabilizers to provide a minimum of 6 months of expected usable construction life at a temperature range of 0 to 120 degrees Fahrenheit.

3. Burlap of 10 ounces per square yard of fabric can also be used.

4. The filter fabric should be purchased in a continuous roll to avoid joints.

5. While not required, wire fencing may be used as a backing to reinforce standard strength filter fabric. The wire fence (14 gauge minimum) should be at 22-48 inches should have a maximum mesh spacing of 6 inches.

6. Posts should be 2-4 feet long and should be composed of either 2” x 2-4” pine (or equivalent) or 1.00 to 1.33 lb/linear ft. Steel posts should have projections for fastening wire and fabric to them.

C. CONSTRUCTION SPECIFICATIONS

1. The maximum height of the filter fence should range between 18 and 36 inches above the ground surface depending on the amount of upslope ponding expected.

2. Posts should be spaced 8 to 10 feet apart when a wire mesh support fence may be fastened to the upslope side of the posts using 1 inch heavy duty wire staples, tie wires, or hog rings. Extend the wire mesh support to the bottom of the trench. The filter fabric should then be stapled or wired to the fence, and 8 to 20 inches of the fabric should extend into the trench.

3. A trench should be excavated 4 to 8 inches wide and 4 to 12 inches deep along the upslope side of the line of posts.

4. If standard strength filter fabric is to be used, the optional wire mesh support fence may be fastened to the upslope side of the posts using 1 inch heavy duty wire staples, tie wires, or hog rings. Extend the wire mesh support to the bottom of the trench. The filter fabric should then be stapled or wired to the fence, and 8 to 20 inches of the fabric should extend into the trench.

5. Extra strength filter fabric does not require a wire mesh support fence. Staple or wire the filter fabric directly to the posts and extend 8 to 20 inches of the fabric into the trench.

6. Where joints in the fabric are required, the filter cloth should be spliced together only at a support post, with a minimum 6 inch overlap, and securely sealed.

7. Do not attach filter fabric to trees.

8. Backfill the trench with compacted soil or 0.75 inch minimum diameter gravel placed over the filter fabric.

D. MAINTENANCE

1. Inspect filter fences daily during periods of prolonged rainfall, immediately after each rainfall event, and weekly during periods of no rainfall. Make any required repairs immediately.

2. Sediment must be removed when it reaches one-third to one-half the height of the filter fence. Take care to avoid damaging the fence during cleanout.

3. Filter fences should not be removed until the upslope has been permanently stabilized. Any sediment deposits remaining in place after the filter fence has been removed should be dressed to conform with the existing grade, prepared, and seeded.

II. TEMPORARY SEDIMENT TRAP

A. DESIGN CRITERIA

1. Temporary sediment traps are appropriate in the following locations:

   a. At the outlet of the perimeter controls installed during the first stage of construction.

   b. At the outlet of any structure which concentrates sediment-laden runoff, the discharge point of diversions, channels, slope drains, or other conveyances.

   c. Above a stormwater inlet that is in line to receive sediment-laden runoff.

2. Temporary sediment traps may be constructed by excavation alone or by excavation in combination with an embankment.

3. Temporary sediment traps are often used in conjunction with a diversion dike or swale.

4. The drainage area for the sediment trap should not exceed 5 distributed acres.

5. The trap must be accessible for ease of regular maintenance, which is critical to its functioning properly.

6. Sediment traps are temporary measures and should not be planned to remain in place longer than between 18 and 24 months.

7. The capacity of the sedimentation pool should provide storage volume for 3.600 cubic feet/acre drainage area.

8. The outlet should be designed to provide a 2 foot settling depth and an additional sediment storage area 1-1/2-foot deep at the bottom of the trap.

9. The embankment may not exceed 5 feet in height.

10. The recommended minimum width at the top of the embankment is between 2 feet and 5 feet.

11. Table 2 illustrates the typical relationship between the embankment height, the height of the outlet (H_o) and the width (W) at the top of the embankment.

TABLE 2 – EMBANKMENT HEIGHT VS. OUTLET HEIGHT AND WIDTH

H	H_o	W
1.5	0.5	2.0
2.0	1.0	2.0
2.5	1.5	2.5
3.0	2.0	2.5
3.5	2.5	3.0
4.0	3.0	3.0
4.5	3.5	4.0
5.0	4.0	4.5

B. MATERIALS

1. Filter fabric (see fabric requirement for silt fence)

2. Coarse aggregate or riprap 2 inches to 14 inches in diameter.

3. Washed gravel 3/4 to 1-1/2 inches in diameter.

4. Line the outlet area with filter fabric prior to placing stone or gravel.

5. Construct the gravel outlet using heavy stones between 6 inches and 14 inches in diameter and face the upstream side with a 12 inch layer of 3/4 inch to 1-1/2 inch washed gravel on the upstream side.

6. Seed and mulch the embankment as soon as possible to ensure stabilization.

C. MAINTENANCE

1. Inspect regularly and after every storm. Make any repairs necessary to ensure the measure is in good working order.

2. Frequent removal of sediment is critical to the functioning of this measure. At a minimum, sediment should be removed and the trap restored to its original volume when sediment reaches 1/3 of the original volume.

3. Sediment removed from the trap must be properly disposed.

4. Check the embankment regularly to make sure it is structurally sound.

III. FILTER SOCKS

This work shall consist of furnishing, installing, maintaining and dispersing of sand filled socks, to contain contaminants, sediment and debris from water moving downstream towards area inlets.

A. DESIGN CRITERIA AND MATERIALS

1. The socks will be used as a form of sediment, pollutant and debris removal.

2. The socks will be placed at locations indicated on the Project Documents or as directed by the Project Engineer.

3. Standard size of the socks for normal protection should be 12” diameter. In severe flow situations, the Project Engineer may recommend larger socks of 18” or 24” diameter. The socks can be stacked one on top of the other, if additional height is required.

4. The socks shall be constructed of a 3 or 5 mil continuous, tubular, HDPE 3/8” (9.38 mm) knitted mesh netting material and filled with sand material approved by the Project Engineer.

5. Socks shall either be made on-site or delivered to the jobsite.

B. MAINTENANCE

1. If the socks become clogged with debris and sediment, they shall be maintained so as to assure proper drainage and water flow into the area inlets.

2. The Contractor shall maintain the socks in a functional condition at all times and it shall be routinely inspected.

3. The Contractor shall remove sediments collected at the base of the socks when they reach 1/3 of the exposed height of the socks, or as directed by the Project Engineer.

4. If the socks require repair, deteriorates or fails, it will be repaired or replaced as necessary.

5. The socks may be removed or dispersed once the street and drainage improvements are complete. The netting material will be disposed of in normal trash containers or removed by the Contractor.

END OF SECTION 015723

SECTION 017300 - EXECUTION

PART 1 - GENERAL

1.1 RELATED DOCUMENTS

A. Drawings and general provisions of the Contract, including General and Supplementary Conditions and other Division 1 Specification Sections, apply to this Section.

1.2 SUMMARY

A. This Section includes general procedural requirements governing execution of the Work including, but not limited to, the following:

1. Construction layout.

2. General installation of products.

3. Progress cleaning.

4. Protection of installed construction.

5. Correction of the Work.

B. Related Sections include the following:

1. Division 1 Section "Project Management and Coordination" for procedures for coordinating field engineering with other construction activities.

2. Division 1 Section "Submittal Procedures" for submitting surveys.

3. Division 1 Section "Closeout Procedures" for submitting final property survey with Project Record Documents, recording of Owner-accepted deviations from indicated lines and levels, and final cleaning.

PART 2 - PRODUCTS (Not Used)

PART 3 - EXECUTION

3.1 EXAMINATION

A. Existing Conditions: The existence and location of site improvements and other construction indicated as existing are not guaranteed. Before beginning work, investigate and verify the existence and location of mechanical and electrical systems and other construction affecting the Work.

B. Existing Utilities: The existence and location of underground and other utilities and construction indicated as existing are not guaranteed. Before beginning sitework, investigate and verify the existence and location of underground utilities and other construction affecting the Work.

1. Before construction, verify the location and invert elevation at points of connection of sanitary sewer, storm sewer, and water-service piping; and underground electrical services.

C. Acceptance of Conditions: Examine substrates, areas, and conditions, with Installer or Applicator present where indicated, for compliance with requirements for installation tolerances and other conditions affecting performance. Record observations.

1. Written Report: Where a written report listing conditions detrimental to performance of the Work is required by other Sections, include the following:

a. Description of the Work.

b. List of detrimental conditions, including substrates.

c. List of unacceptable installation tolerances.

d. Recommended corrections.

2. Verify compatibility with and suitability of substrates, including compatibility with existing finishes or primers.

3. Proceed with installation only after unsatisfactory conditions have been corrected. Proceeding with the Work indicates acceptance of surfaces and conditions.

3.2 PREPARATION

A. Field Measurements: Take field measurements as required to fit the Work properly. Recheck measurements before installing each product. Where portions of the Work are indicated to fit to other construction, verify dimensions of other construction by field measurements before fabrication. Coordinate fabrication schedule with construction progress to avoid delaying the Work.

B. Space Requirements: Verify space requirements and dimensions of items shown diagrammatically on Drawings.

C. Review of Contract Documents and Field Conditions: Immediately on discovery of the need for clarification of the Contract Documents, submit a request for information to Architect. Include a detailed description of problem encountered, together with recommendations for changing the Contract Documents.

3.3 CONSTRUCTION LAYOUT

A. Verification: Before proceeding to lay out the Work, verify layout information shown on Drawings, in relation to the property survey and existing benchmarks. If discrepancies are discovered, notify Architect promptly.

B. Site Improvements: Locate and lay out site improvements, including pavements, grading, fill and topsoil placement, utility slopes, and invert elevations.

C. Record Log: Maintain a log of layout control work. Record deviations from required lines and levels. Include beginning and ending dates and times of surveys, weather conditions, name and

duty of each survey party member, and types of instruments and tapes used. Make the log available for reference by Architect.

3.4 FIELD ENGINEERING

A. Reference Points: Locate existing permanent benchmarks, control points, and similar reference points before beginning the Work. Preserve and protect permanent benchmarks and control points during construction operations.

1. Replace lost or destroyed permanent benchmarks and control points promptly. Base replacements on the original survey control points.

B. Benchmarks: Establish and maintain a minimum of two permanent benchmarks on Project site, referenced to data established by survey control points. Comply with authorities having jurisdiction for type and size of benchmark.

1. Record benchmark locations, with horizontal and vertical data, on Project Record Documents.

2. Where the actual location or elevation of layout points cannot be marked, provide temporary reference points sufficient to locate the Work.

3. Remove temporary reference points when no longer needed. Restore marked construction to its original condition.

3.5 INSTALLATION

A. General: Locate the Work and components of the Work accurately, in correct alignment and elevation, as indicated.

1. Make vertical work plumb and make horizontal work level.

2. Where space is limited, install components to maximize space available for maintenance and ease of removal for replacement.

3. Conceal pipes, ducts, and wiring in finished areas, unless otherwise indicated.

B. Comply with manufacturer's written instructions and recommendations for installing products in applications indicated.

C. Install products at the time and under conditions that will ensure the best possible results. Maintain conditions required for product performance until Substantial Completion.

D. Conduct construction operations so no part of the Work is subjected to damaging operations or loading in excess of that expected during normal conditions of occupancy.

E. Tools and Equipment: Do not use tools or equipment that produce harmful noise levels.

F. Templates: Obtain and distribute to the parties involved templates for work specified to be factory prepared and field installed. Check Shop Drawings of other work to confirm that adequate provisions are made for locating and installing products to comply with indicated requirements.

G. Anchors and Fasteners: Provide anchors and fasteners as required to anchor each component securely in place, accurately located and aligned with other portions of the Work.

1. Mounting Heights: Where mounting heights are not indicated, mount components at heights directed by Architect.

2. Coordinate installation of anchorages. Furnish setting drawings, templates, and directions for installing anchorages, including sleeves, concrete inserts, anchor bolts, and items with integral anchors, that are to be embedded in concrete or masonry. Deliver such items to Project site in time for installation.

H. Joints: Make joints of uniform width. Where joint locations in exposed work are not indicated, arrange joints for the best visual effect. Fit exposed connections together to form hairline joints.

I. Hazardous Materials: Use products, cleaners, and installation materials that are not considered hazardous.

3.6 PROGRESS CLEANING

A. General: Clean Project site and work areas daily, including common areas. Coordinate progress cleaning for joint-use areas where more than one installer has worked. Enforce requirements strictly. Dispose of materials lawfully.

1. Comply with requirements in NFPA 241 for removal of combustible waste materials and debris.

2. Do not hold materials more than 7 days during normal weather or 3 days if the temperature is expected to rise above 80 deg F (27 deg C).

3. Containerize hazardous and unsanitary waste materials separately from other waste. Mark containers appropriately and dispose of legally, according to regulations.

B. Site: Maintain Project site free of waste materials and debris.

C. Work Areas: Clean areas where work is in progress to the level of cleanliness necessary for proper execution of the Work.

1. Remove liquid spills promptly.

D. Installed Work: Keep installed work clean. Clean installed surfaces according to written instructions of manufacturer or fabricator of product installed, using only cleaning materials specifically recommended. If specific cleaning materials are not recommended, use cleaning materials that are not hazardous to health or property and that will not damage exposed surfaces.

E. Waste Disposal: Burying or burning waste materials on-site will not be permitted. Washing waste materials down sewers or into waterways will not be permitted.

F. During handling and installation, clean and protect construction in progress and adjoining materials already in place. Apply protective covering where required to ensure protection from damage or deterioration at Substantial Completion.

G. Clean and provide maintenance on completed construction as frequently as necessary through the remainder of the construction period. Adjust and lubricate operable components to ensure operability without damaging effects.

H. Limiting Exposures: Supervise construction operations to assure that no part of the construction, completed or in progress, is subject to harmful, dangerous, damaging, or otherwise deleterious exposure during the construction period.

3.7 PROTECTION OF INSTALLED CONSTRUCTION

A. Provide final protection and maintain conditions that ensure installed Work is without damage or deterioration at time of Substantial Completion.

B. Comply with manufacturer's written instructions for temperature and relative humidity.

3.8 CORRECTION OF THE WORK

A. Repair or remove and replace defective construction. Restore damaged substrates and finishes.

1. Repairing includes replacing defective parts, refinishing damaged surfaces, touching up with matching materials, and properly adjusting operating equipment.

B. Restore permanent facilities used during construction to their specified condition.

C. Remove and replace damaged surfaces that are exposed to view if surfaces cannot be repaired without visible evidence of repair.

D. Repair components that do not operate properly. Remove and replace operating components that cannot be repaired.

END OF SECTION 017300

SECTION 017329 - CUTTING AND PATCHING

PART 1 - GENERAL

1.1 RELATED DOCUMENTS

A. Drawings and general provisions of the Contract, including General and Supplementary Conditions and other Division 1 Specification Sections, apply to this Section.

1.2 SUMMARY

A. This Section includes procedural requirements for cutting and patching.

B. Related Sections include the following:

a. Divisions 2 through 16 Sections for specific requirements and limitations applicable to cutting and patching individual parts of the Work.

b. Requirements in this Section apply to mechanical and electrical installations. Refer to Divisions 15 and 16 Sections for other requirements and limitations applicable to cutting and patching mechanical and electrical installations.

1.3 DEFINITIONS

A. Cutting: Removal of existing construction necessary to permit installation or performance of other Work.

B. Patching: Fitting and repair work required to restore surfaces to original conditions after installation of other Work.

1.4 QUALITY ASSURANCE

A. Structural Elements: Do not cut and patch structural elements in a manner that could change their load-carrying capacity or load-deflection ratio.

B. Operational Elements: Do not cut and patch the following operating elements and related components in a manner that results in reducing their capacity to perform as intended or that results in increased maintenance or decreased operational life or safety.

1. Primary operational systems and equipment.
2. Air or smoke barriers.
3. Fire-protection systems.
4. Control systems.
5. Communication systems.
6. Conveying systems.
7. Electrical wiring systems.
8. Operating systems of special construction in Division 13 Sections.

C. Miscellaneous Elements: Do not cut and patch the following elements or related components in a manner that could change their load-carrying capacity, that results in reducing their capacity

to perform as intended, or that results in increased maintenance or decreased operational life or safety.

1. Water, moisture, or vapor barriers.
2. Membranes and flashings.
3. Equipment supports.
4. Piping, ductwork, vessels, and equipment.
5. Noise- and vibration-control elements and systems.

D. Visual Requirements: Do not cut and patch construction in a manner that results in visual evidence of cutting and patching. Do not cut and patch construction exposed on the exterior or in occupied spaces in a manner that would, in Architect's opinion, reduce the building's aesthetic qualities. Remove and replace construction that has been cut and patched in a visually unsatisfactory manner.

1. If possible, retain original Installer or fabricator to cut and patch exposed Work listed below. If it is impossible to engage original Installer or fabricator, engage another recognized, experienced, and specialized firm.
   a. Ornamental metal.
   b. Roofing.
   c. Firestopping.
   d. HVAC enclosures, cabinets, or covers.

1.5 WARRANTY

A. Warranties: Remove, replace, patch, and repair materials and surfaces cut or damaged during cutting and patching operations, by methods and with materials so as not to void warranties.

PART 2 - PRODUCTS

2.1 MATERIALS

A. General: Comply with requirements specified in other Sections of these Specifications.

B. Existing Materials: Use materials identical to existing materials. For exposed surfaces, use materials that visually match existing adjacent surfaces to the fullest extent possible.
   1. If identical materials are unavailable or cannot be used, use materials that, when installed, will match the visual and functional performance of existing materials.

PART 3 - EXECUTION

3.1 EXAMINATION

A. Examine surfaces to be cut and patched and conditions under which cutting and patching are to be performed.

1. Compatibility: Before patching, verify compatibility with and suitability of substrates, including compatibility with existing finishes or primers.

2. Proceed with installation only after unsafe or unsatisfactory conditions have been corrected.

3.2 PREPARATION

A. Temporary Support: Provide temporary support of Work to be cut.

B. Protection: Protect existing construction during cutting and patching to prevent damage. Provide protection from adverse weather conditions for portions of Project that might be exposed during cutting and patching operations.

C. Adjoining Areas: Avoid interference with use of adjoining areas or interruption of free passage to adjoining areas.

3.3 PERFORMANCE

A. General: Employ skilled workers to perform cutting and patching. Proceed with cutting and patching at the earliest feasible time, and complete without delay.

1. Cut existing construction to provide for installation of other components or performance of other construction, and subsequently patch as required to restore surfaces to their original condition.

B. Cutting: Cut existing construction by sawing, drilling, breaking, chipping, grinding, and similar operations, including excavation, using methods least likely to damage elements retained or adjoining construction. If possible, review proposed procedures with original Installer; comply with original Installer's written recommendations.

1. In general, use hand or small power tools designed for sawing and grinding, not hammering and chopping. Cut holes and slots as small as possible, neatly to size required, and with minimum disturbance of adjacent surfaces. Temporarily cover openings when not in use.
2. Existing Finished Surfaces: Cut or drill from the exposed or finished side into concealed surfaces.
3. Masonry: Cut using a cutting machine, such as an abrasive saw or a diamond-core drill.
4. Excavating and Backfilling: Comply with requirements in applicable Division 2 Sections where required by cutting and patching operations.
5. Mechanical and Electrical Services: Cut off pipe or conduit in walls or partitions to be removed. Cap, valve, or plug and seal remaining portion of pipe or conduit to prevent entrance of moisture or other foreign matter after cutting.
6. Proceed with patching after construction operations requiring cutting are complete.

C. Patching: Patch construction by filling, repairing, refinishing, closing up, and similar operations following performance of other Work. Patch with durable seams that are as invisible as possible. Provide materials and comply with installation requirements specified in other Sections of these Specifications.

1. Inspection: Where feasible, test and inspect patched areas after completion to demonstrate integrity of installation.

2. Exposed Finishes: Restore exposed finishes of patched areas and extend finish restoration into retained adjoining construction in a manner that will eliminate evidence of patching and refinishing.
3. Floors and Walls: Where walls or partitions that are removed extend one finished area into another, patch and repair floor and wall surfaces in the new space. Provide an even surface of uniform finish, color, texture, and appearance. Remove existing floor and wall coverings and replace with new materials, if necessary, to achieve uniform color and appearance.

    a. Where patching occurs in a painted surface, apply primer and intermediate paint coats over the patch and apply final paint coat over entire unbroken surface containing the patch. Provide additional coats until patch blends with adjacent surfaces.

4. Ceilings: Patch, repair, or re-hang existing ceilings as necessary to provide an even-plane surface of uniform appearance.
5. Exterior Building Enclosure: Patch components in a manner that restores enclosure to a weather tight condition.

END OF SECTION 017329

SECTION 017700 - CLOSEOUT PROCEDURES

PART 1 - GENERAL

1.1 RELATED DOCUMENTS

A. Drawings and general provisions of the Contract, including General and Supplementary Conditions and other Division 1 Specification Sections, apply to this Section.

1.2 SUMMARY

A. This Section includes administrative and procedural requirements for contract closeout, including, but not limited to, the following:

1. Inspection procedures.

2. Warranties.

3. Final cleaning.

B. Related Sections include the following:

1. Division 1 Section "Project Record Documents" for submitting Record Drawings, Record Specifications, and Record Product Data.

2. Division 1 Section "Operation and Maintenance Data" for operation and maintenance manual requirements.

3. Division 1 Section "Execution Requirements" for requirements for instructing Owner's personnel.

4. Divisions 2 through 16 Sections for specific closeout and special cleaning requirements for the Work in those Sections.

1.3 SUBSTANTIAL COMPLETION

A. Preliminary Procedures: Before requesting inspection for determining date of Substantial Completion, complete the following. List items below that are incomplete in request.

1. Prepare a list of items to be completed and corrected (punch list), the value of items on the list, and reasons why the Work is not complete.

2. Advise Owner of pending insurance changeover requirements.

3. Submit specific warranties, workmanship bonds, maintenance service agreements, final certifications, and similar documents.

4. Obtain and submit releases permitting Owner unrestricted use of the Work and access to services and utilities. Include occupancy permits, operating certificates, and similar releases.

5. Prepare and submit Project Record Documents, operation and maintenance manuals, Final Completion construction photographs, damage or settlement surveys, property surveys, and similar final record information.

6. Deliver tools, spare parts, extra materials, and similar items to location designated by Owner. Label with manufacturer's name and model number where applicable.

7. Make final changeover of permanent locks and deliver keys to Owner. Advise Owner's personnel of changeover in security provisions.

8. Complete startup testing of systems.

9. Submit test/adjust/balance records.

10. Terminate and remove temporary facilities from Project site, along with mockups, construction tools, and similar elements.

11. Advise Owner of changeover in heat and other utilities.

12. Submit changeover information related to Owner's occupancy, use, operation, and maintenance.

13. Complete final cleaning requirements, including touchup painting.

14. Touch up and otherwise repair and restore marred exposed finishes to eliminate visual defects.

B. Inspection: Submit a written request for inspection for Substantial Completion. On receipt of request, Architect will either proceed with inspection or notify Contractor of unfulfilled requirements. Architect will prepare the Certificate of Substantial Completion after inspection or will notify Contractor of items, either on Contractor's list or additional items identified by Architect, that must be completed or corrected before certificate will be issued.

1. Reinspection: Request reinspection when the Work identified in previous inspections as incomplete is completed or corrected. The Architect will conduct no more than two (2) inspections to establish Substantial Completion. The costs associated with any additional inspections required to establish Substantial Completion shall be paid for by the Contractor.

2. Results of completed inspection will form the basis of requirements for Final Completion.

1.4 FINAL COMPLETION

A. Preliminary Procedures: Before requesting final inspection for determining date of Final Completion, complete the following:

1. Submit a final Application for Payment according to Division 1 Section "Payment Procedures."

2. Submit certified copy of Architect's Substantial Completion inspection list of items to be completed or corrected (punch list), endorsed and dated by Architect. The certified copy

of the list shall state that each item has been completed or otherwise resolved for acceptance.

3. Submit evidence of final, continuing insurance coverage complying with insurance requirements.

4. Submit pest-control final inspection report and warranty.

5. Instruct Owner's personnel in operation, adjustment, and maintenance of products, equipment, and systems.

B. Inspection: Submit a written request for final inspection for acceptance. On receipt of request, Architect will either proceed with inspection or notify Contractor of unfulfilled requirements. Architect will prepare a final Certificate for Payment after inspection or will notify Contractor of construction that must be completed or corrected before certificate will be issued.

1. Reinspection: Request reinspection when the Work identified in previous inspections as incomplete is completed or corrected. The Architect will conduct no more than one (1) inspections to establish Final Completion. The costs associated with any additional inspections required to establish Final Completion shall be paid for by the Contractor.

C. LIST OF INCOMPLETE ITEMS (PUNCH LIST)

1. Preparation: Submit three copies of list. Include name and identification of each space and area affected by construction operations for incomplete items and items needing correction including, if necessary, areas disturbed by Contractor that are outside the limits of construction.

2. Organize list of spaces in sequential order, starting with exterior areas first and proceeding from lowest floor to highest floor.

3. Organize items applying to each space by major element, including categories for ceiling, individual walls, floors, equipment, and building systems.

4. Include the following information at the top of each page:

a. Project name.

b. Date.

c. Name of Architect.

d. Name of Contractor.

e. Page number.

1.5 WARRANTIES

A. Submittal Time: Submit written warranties on request of Architect for designated portions of the Work where commencement of warranties other than date of Substantial Completion is indicated.

B. Partial Occupancy: Submit properly executed warranties within 15 days of completion of designated portions of the Work that are completed and occupied or used by Owner during construction period by separate agreement with Contractor.

C. Organize warranty documents into an orderly sequence based on the table of contents of the Project Manual.

1. PDF electronic file. Assemble each warranty manual into a composite electronically indexed file. Submit on digital media acceptable to Architect.

a. Name each indexed document file in composite electronic index with applicable item name. Include a complete electronically linked operation and maintenance directory.
b. Enable inserted reviewer comments on draft submittals.

2. Bind paper copies of warranties and bonds in heavy-duty, 3-ring, vinyl-covered, loose-leaf binders, thickness as necessary to accommodate contents, and sized to receive 8-1/2-by-11-inch (215-by-280-mm) paper.

3. Provide heavy paper dividers with plastic-covered tabs for each separate warranty. Mark tab to identify the product or installation. Provide a typed description of the product or installation, including the name of the product and the name, address, and telephone number of Installer.

4. Identify each binder on the front and spine with the typed or printed title "WARRANTIES," Project name, and name of Contractor.

D. Provide additional copies of each warranty to include in operation and maintenance manuals.

PART 2 - PRODUCTS

2.1 MATERIALS

A. Cleaning Agents: Use cleaning materials and agents recommended by manufacturer or fabricator of the surface to be cleaned. Do not use cleaning agents that are potentially hazardous to health or property or that might damage finished surfaces.

PART 3 - EXECUTION

3.1 FINAL CLEANING

A. General: Provide final cleaning. Conduct cleaning and waste-removal operations to comply with local laws and ordinances and Federal and local environmental and antipollution regulations.

B. Cleaning: Employ experienced workers or professional cleaners for final cleaning. Clean each surface or unit to condition expected in an average commercial building cleaning and maintenance program. Comply with manufacturer's written instructions.

1. Complete the following cleaning operations before requesting inspection for certification of Substantial Completion for entire Project or for a portion of Project:

a. Clean Project site, yard, and grounds, in areas disturbed by construction activities, including landscape development areas, of rubbish, waste material, litter, and other foreign substances.

b. Sweep paved areas broom clean. Remove petrochemical spills, stains, and other foreign deposits.

c. Remove tools, construction equipment, machinery, and surplus material from Project site.

d. Clean exposed exterior and interior hard-surfaced finishes to a dirt-free condition, free of stains, films, and similar foreign substances. Avoid disturbing natural weathering of exterior surfaces. Restore reflective surfaces to their original condition.

e. Remove debris and surface dust from limited access spaces, including roofs, plenums, shafts, trenches, equipment vaults, manholes, attics, and similar spaces.

f. Sweep concrete floors broom clean in unoccupied spaces.

g. Vacuum carpet and similar soft surfaces, removing debris and excess nap; shampoo if visible soil or stains remain.

h. Clean transparent materials, including mirrors and glass in doors and windows. Remove glazing compounds and other noticeable, vision-obscuring materials. Replace chipped or broken glass and other damaged transparent materials. Polish mirrors and glass, taking care not to scratch surfaces.

i. Remove labels that are not permanent.

j. Touch up and otherwise repair and restore marred, exposed finishes and surfaces. Replace finishes and surfaces that cannot be satisfactorily repaired or restored or that already show evidence of repair or restoration.

   1) Do not paint over "UL" and similar labels, including mechanical and electrical nameplates.

k. Wipe surfaces of mechanical and electrical equipment, elevator equipment, and similar equipment. Remove excess lubrication, paint and mortar droppings, and other foreign substances.

l. Replace parts subject to unusual operating conditions.

m. Clean plumbing fixtures to a sanitary condition, free of stains, including stains resulting from water exposure.

n. Replace disposable air filters and clean permanent air filters. Clean exposed surfaces of diffusers, registers, and grills.

o. Clean ducts, blowers, and coils if units were operated without filters during construction.

p. Clean light fixtures, lamps, globes, and reflectors to function with full efficiency. Replace burned-out bulbs, and those noticeably dimmed by hours of use, and defective and noisy starters in fluorescent and mercury vapor fixtures to comply with requirements for new fixtures.

q. Leave Project clean and ready for occupancy.

C. Pest Control: Engage an experienced, licensed exterminator to make a final inspection and rid Project of rodents, insects, and other pests. Prepare a report.

D. Comply with safety standards for cleaning. Do not burn waste materials. Do not bury debris or excess materials on Owner's property. Do not discharge volatile, harmful, or dangerous materials into drainage systems. Remove waste materials from Project site and dispose of lawfully.

END OF SECTION 017700

SECTION 017823 - OPERATION AND MAINTENANCE DATA

PART 1 - GENERAL

1.1 RELATED DOCUMENTS

A. Drawings and general provisions of the Contract, including General and Supplementary Conditions and other Division 1 Specification Sections, apply to this Section.

1.2 SUMMARY

A. This Section includes administrative and procedural requirements for preparing operation and maintenance manuals, including the following:

1. Operation and maintenance documentation directory.

2. Operation manuals for systems, subsystems, and equipment.

3. Maintenance manuals for the care and maintenance of products, materials, and finishes.

B. Related Sections include the following:

1. Division 1 Section "Submittal Procedures" for submitting copies of submittals for operation and maintenance manuals.

2. Division 1 Section "Closeout Procedures" for submitting operation and maintenance manuals.

3. Division 1 Section "Project Record Documents" for preparing Record Drawings for operation and maintenance manuals.

4. Divisions 2 through 16 Sections for specific operation and maintenance manual requirements for the Work in those Sections.

1.3 DEFINITIONS

A. System: An organized collection of parts, equipment, or subsystems united by regular interaction.

B. Subsystem: A portion of a system with characteristics similar to a system.

1.4 SUBMITTALS

A. Initial Submittal: Submit 2 draft copies of each manual at least 15 days before requesting inspection for Substantial Completion. Include a complete operation and maintenance directory. Architect will return of draft and mark whether general scope and content of manual are acceptable. Correct or modify each manual to comply with Architect's comments

B. Final Submittal: Submit 3 copies of each corrected manual within 15 days of receipt of Architect's comments.

1.5 COORDINATION

A. Where operation and maintenance documentation includes information on installations by more than one factory-authorized service representative, assemble and coordinate information furnished by representatives and prepare manuals.

PART 2 - PRODUCTS

2.1 OPERATION AND MAINTENANCE DOCUMENTATION DIRECTORY

A. Organization: Include a section in the directory for each of the following:

1. List of documents.

2. List of systems.

3. List of equipment.

4. Table of contents.

B. List of Systems and Subsystems: List systems alphabetically. Include references to operation and maintenance manuals that contain information about each system.

C. List of Equipment: List equipment for each system, organized alphabetically by system. For pieces of equipment not part of system, list alphabetically in separate list.

D. Tables of Contents: Include a table of contents for each operation and maintenance manual.

E. Identification: In the documentation directory and in each operation and maintenance manual, identify each system, subsystem, and piece of equipment with same designation used in the Contract Documents. If no designation exists, assign a designation according to ASHRAE Guideline 4, "Preparation of Operating and Maintenance Documentation for Building Systems."

2.2 MANUALS, GENERAL

A. Organization: Unless otherwise indicated, organize each manual into a separate section for each system and subsystem, and a separate section for each piece of equipment not part of a system. Each manual shall contain the following materials, in the order listed:

1. Title page.

2. Table of contents.

3. Manual contents.

B. Title Page: Enclose title page in transparent plastic sleeve. Include the following information:

1. Subject matter included in manual.

2. Name and address of Project.

3. Name and address of Owner.

4. Date of submittal.

5. Name, address, and telephone number of Contractor.

6. Name and address of Architect.

7. Cross-reference to related systems in other operation and maintenance manuals.

C. Table of Contents: List each product included in manual, identified by product name, indexed to the content of the volume, and cross-referenced to Specification Section number in Project Manual.

1. If operation or maintenance documentation requires more than one volume to accommodate data, include comprehensive table of contents for all volumes in each volume of the set.

D. Manual Contents: Organize into sets of manageable size. Arrange contents alphabetically by system, subsystem, and equipment. If possible, assemble instructions for subsystems, equipment, and components of one system into a single binder.

E. Manuals, Electronic Files: Submit manuals in the form of a multiple file composite electronic PDF file for each manual type required.

1. Electronic Files: Use electronic files prepared by manufacturer where available. Where scanning of paper documents is required, configure scanned file for minimum readable file size.
2. File Names and Bookmarks: Enable bookmarking of individual documents based on file names. Name document files to correspond to system, subsystem, and equipment names used in manual directory and table of contents. Group documents for each system and subsystem into individual composite bookmarked files, then create composite manual, so that resulting bookmarks reflect the system, subsystem, and equipment names in a readily navigated file tree. Configure electronic manual to display bookmark panel on opening file.

F. Manual, Paper Copy: Submit manuals in the form of hard copy, bound and labeled volumes.

1. Binders: Heavy-duty, 3-ring, vinyl-covered, loose-leaf binders, in thickness necessary to accommodate contents, sized to hold 8-1/2-by-11-inch (215-by-280-mm) paper; with clear plastic sleeve on spine to hold label describing contents and with pockets inside covers to hold folded oversize sheets.

a. If two or more binders are necessary to accommodate data of a system, organize data in each binder into groupings by subsystem and related components. Cross-reference other binders if necessary to provide essential information for proper operation or maintenance of equipment or system.

b. Identify each binder on front and spine, with printed title "OPERATION AND MAINTENANCE MANUAL," Project title or name, and subject matter of contents. Indicate volume number for multiple-volume sets.

2. Dividers: Heavy-paper dividers with plastic-covered tabs for each section. Mark each tab to indicate contents. Include typed list of products and major components of equipment included in the section on each divider, cross-referenced to Specification Section number and title of Project Manual.

3. Protective Plastic Sleeves: Transparent plastic sleeves designed to enclose diagnostic software diskettes for computerized electronic equipment.

4. Supplementary Text: Prepared on 8-1/2-by-11-inch (215-by-280-mm) white bond paper.

5. Drawings: Attach reinforced, punched binder tabs on drawings and bind with text.

   a. If oversize drawings are necessary, fold drawings to same size as text pages and use as foldouts.

   b. If drawings are too large to be used as foldouts, fold and place drawings in labeled envelopes and bind envelopes in rear of manual. At appropriate locations in manual, insert typewritten pages indicating drawing titles, descriptions of contents, and drawing locations.

2.3 OPERATION MANUALS

A. Content: In addition to requirements in this Section, include operation data required in individual Specification Sections and the following information:

1. System, subsystem, and equipment descriptions.

2. Performance and design criteria if Contractor is delegated design responsibility.

3. Operating standards.

4. Operating procedures.

5. Operating logs.

6. Wiring diagrams.

7. Control diagrams.

8. Piped system diagrams.

9. Precautions against improper use.

10. License requirements including inspection and renewal dates.

B. Descriptions: Include the following:

1. Product name and model number.

2. Manufacturer's name.

3. Equipment identification with serial number of each component.

4. Equipment function.

5. Operating characteristics.

6. Limiting conditions.

7. Performance curves.

8. Engineering data and tests.

9. Complete nomenclature and number of replacement parts.

C. Operating Procedures: Include the following, as applicable:

1. Startup procedures.

2. Equipment or system break-in procedures.

3. Routine and normal operating instructions.

4. Regulation and control procedures.

5. Instructions on stopping.

6. Normal shutdown instructions.

7. Seasonal and weekend operating instructions.

8. Required sequences for electric or electronic systems.

9. Special operating instructions and procedures.

D. Systems and Equipment Controls: Describe the sequence of operation, and diagram controls as installed.

E. Piped Systems: Diagram piping as installed, and identify color-coding where required for identification.

2.4 PRODUCT MAINTENANCE MANUAL

A. Content: Organize manual into a separate section for each product, material, and finish. Include source information, product information, maintenance procedures, repair materials and sources, and warranties and bonds, as described below.

B. Source Information: List each product included in manual, identified by product name and arranged to match manual's table of contents. For each product, list name, address, and telephone number of Installer or supplier and maintenance service agent, and cross-reference Specification Section number and title in Project Manual.

C. Product Information: Include the following, as applicable:

1. Product name and model number.

2. Manufacturer's name.

3. Color, pattern, and texture.

4. Material and chemical composition.

5. Reordering information for specially manufactured products.

D. Maintenance Procedures: Include manufacturer's written recommendations and the following:

1. Inspection procedures.

2. Types of cleaning agents to be used and methods of cleaning.

3. List of cleaning agents and methods of cleaning detrimental to product.

4. Schedule for routine cleaning and maintenance.

5. Repair instructions.

E. Repair Materials and Sources: Include lists of materials and local sources of materials and related services.

F. Warranties and Bonds: Include copies of warranties and bonds and lists of circumstances and conditions that would affect validity of warranties or bonds.

1. Include procedures to follow and required notifications for warranty claims.

2.5 SYSTEMS AND EQUIPMENT MAINTENANCE MANUAL

A. Content: For each system, subsystem, and piece of equipment not part of a system, include source information, manufacturers' maintenance documentation, maintenance procedures, maintenance and service schedules, spare parts list and source information, maintenance service contracts, and warranty and bond information, as described below.

B. Source Information: List each system, subsystem, and piece of equipment included in manual, identified by product name and arranged to match manual's table of contents. For each product, list name, address, and telephone number of Installer or supplier and maintenance service agent, and cross-reference Specification Section number and title in Project Manual.

C. Manufacturers' Maintenance Documentation: Manufacturers' maintenance documentation including the following information for each component part or piece of equipment:

1. Standard printed maintenance instructions and bulletins.

2. Drawings, diagrams, and instructions required for maintenance, including disassembly and component removal, replacement, and assembly.

3. Identification and nomenclature of parts and components.

4. List of items recommended to be stocked as spare parts.

D. Maintenance Procedures: Include the following information and items that detail essential maintenance procedures:

1. Test and inspection instructions.

2. Troubleshooting guide.

3. Precautions against improper maintenance.

4. Disassembly; component removal, repair, and replacement; and reassembly instructions.

5. Aligning, adjusting, and checking instructions.

6. Demonstration and training videotape, if available.

E. Maintenance and Service Schedules: Include service and lubrication requirements, list of required lubricants for equipment, and separate schedules for preventive and routine maintenance and service with standard time allotment.

1. Scheduled Maintenance and Service: Tabulate actions for daily, weekly, monthly, quarterly, semiannual, and annual frequencies.

2. Maintenance and Service Record: Include manufacturers' forms for recording maintenance.

F. Spare Parts List and Source Information: Include lists of replacement and repair parts, with parts identified and cross-referenced to manufacturers' maintenance documentation and local sources of maintenance materials and related services.

G. Maintenance Service Contracts: Include copies of maintenance agreements with name and telephone number of service agent.

H. Warranties and Bonds: Include copies of warranties and bonds and lists of circumstances and conditions that would affect validity of warranties or bonds.

1. Include procedures to follow and required notifications for warranty claims.

PART 3 - EXECUTION

3.1 MANUAL PREPARATION

A. Product Maintenance Manual: Assemble a complete set of maintenance data indicating care and maintenance of each product, material, and finish incorporated into the Work. Submit in electronic form and paper copy.

B. Operation and Maintenance Manuals: Assemble a complete set of operation and maintenance data indicating operation and maintenance of each system, subsystem, and piece of equipment not part of a system. Submit in electronic form and paper copy.

1. Engage a factory-authorized service representative to assemble and prepare information for each system, subsystem, and piece of equipment not part of a system.

2. Prepare a separate manual for each system and subsystem, in the form of an instructional manual for use by Owner's operating personnel.

C. Manufacturers' Data: Where manuals contain manufacturers' standard printed data, include only sheets pertinent to product or component installed. Mark each sheet to identify each product or component incorporated into the Work. If data include more than one item in a tabular format, identify each item using appropriate references from the Contract Documents. Identify data applicable to the Work and delete references to information not applicable. Submit in electronic form and paper copy.

1. Prepare supplementary text if manufacturers' standard printed data are not available and where the information is necessary for proper operation and maintenance of equipment or systems.

D. Drawings: Prepare drawings supplementing manufacturers' printed data to illustrate the relationship of component parts of equipment and systems and to illustrate control sequence and flow diagrams. Coordinate these drawings with information contained in Record Drawings to ensure correct illustration of completed installation. Submit in electronic form and paper copy.

1. Do not use original Project Record Documents as part of operation and maintenance manuals.

2. Comply with requirements of newly prepared Record Drawings in Division 1 Section "Project Record Documents."

E. Comply with Division 1 Section "Closeout Procedures" for schedule for submitting operation and maintenance documentation.

END OF SECTION 017823

SECTION 017839 - PROJECT RECORD DOCUMENTS

PART 1 - GENERAL

1.1 RELATED DOCUMENTS

A. Drawings and general provisions of the Contract, including General and Supplementary Conditions and other Division 1 Specification Sections, apply to this Section.

1.2 SUMMARY

A. This Section includes administrative and procedural requirements for Project Record Documents, including the following:

1. Record Drawings.

2. Record Specifications.

3. Record Product Data.

B. Related Sections include the following:

1. Division 1 Section "Closeout Procedures" for general closeout procedures.

2. Division 1 Section "Operation and Maintenance Data" for operation and maintenance manual requirements.

3. Divisions 2 through 16 Sections for specific requirements for Project Record Documents of the Work in those Sections.

1.3 SUBMITTALS

A. Record Drawings: Comply with the following:

1. Number of Copies: Submit one set of marked-up Record Prints.

B. Record Specifications: Submit one copy of Project's Specifications, including addenda and contract modifications.

C. Record Product Data: Submit one copy of each Product Data submittal.

1. Where Record Product Data is required as part of operation and maintenance manuals, submit marked-up Product Data as an insert in manual instead of submittal as Record Product Data.

PART 2 - PRODUCTS

2.1 RECORD DRAWINGS

A. Record Prints: Maintain one set of blue- or black-line white prints of the Contract Drawings and Shop Drawings.

1. Preparation: Mark Record Prints to show the actual installation where installation varies from that shown originally. Require individual or entity who obtained record data, whether individual or entity is Installer, subcontractor, or similar entity, to prepare the marked-up Record Prints.

    a. Give particular attention to information on concealed elements that would be difficult to identify or measure and record later.

    b. Accurately record information in an understandable drawing technique.

    c. Record data as soon as possible after obtaining it. Record and check the markup before enclosing concealed installations.

2. Content: Types of items requiring marking include, but are not limited to, the following:

    a. Dimensional changes to Drawings.

    b. Revisions to details shown on Drawings.

    c. Depths of foundations below first floor.

    d. Locations and depths of underground utilities.

    e. Revisions to routing of piping and conduits.

    f. Revisions to electrical circuitry.

    g. Actual equipment locations.

    h. Duct size and routing.

    i. Locations of concealed internal utilities.

    j. Changes made by Change Order or Change Directive.

    k. Changes made following Architect's written orders.

    l. Details not on the original Contract Drawings.

    m. Field records for variable and concealed conditions.

    n. Record information on the Work that is shown only schematically.

3. Mark the Contract Drawings or Shop Drawings, whichever is most capable of showing actual physical conditions, completely and accurately. If Shop Drawings are marked, show cross-reference on the Contract Drawings.

4. Mark record sets with erasable, red-colored pencil. Use other colors to distinguish between changes for different categories of the Work at same location.

5. Mark important additional information that was either shown schematically or omitted from original Drawings.

6. Note Construction Change Directive numbers, alternate numbers, Change Order numbers, and similar identification, where applicable.

2.2 RECORD SPECIFICATIONS

A. Preparation: Mark Specifications to indicate the actual product installation where installation varies from that indicated in Specifications, addenda, and contract modifications.

1. Mark copy with the proprietary name and model number of products, materials, and equipment furnished, including substitutions and product options selected.

2. Record the name of manufacturer, supplier, Installer, and other information necessary to provide a record of selections made.

2.3 MISCELLANEOUS RECORD SUBMITTALS

A. Assemble miscellaneous records required by other Specification Sections for miscellaneous record keeping and submittal in connection with actual performance of the Work. Bind or file miscellaneous records and identify each, ready for continued use and reference.

PART 3 - EXECUTION

3.1 RECORDING AND MAINTENANCE

A. Recording: Maintain one copy of each submittal during the construction period for Project Record Document purposes. Post changes and modifications to Project Record Documents as they occur; do not wait until the end of Project.

B. Maintenance of Record Documents and Samples: Store Record Documents and Samples in the field office apart from the Contract Documents used for construction. Do not use Project Record Documents for construction purposes. Maintain Record Documents in good order and in a clean, dry, legible condition, protected from deterioration and loss. Provide access to Project Record Documents for Architect's reference during normal working hours.

END OF SECTION 017839

SECTION 017900 - DEMONSTRATION AND TRAINING

PART 1 - GENERAL

1.1 RELATED DOCUMENTS

A. Drawings and general provisions of the Contract, including General and Supplementary Conditions and other Division 1 Specification Sections, apply to this Section.

1.2 SUMMARY

A. This Section includes administrative and procedural requirements for instructing Owner's personnel, including the following:

1. Demonstration of operation of systems, subsystems, and equipment.

2. Training in operation and maintenance of systems, subsystems, and equipment.

3. Demonstration and training videotapes.

B. Related Sections include the following:

1. Divisions 2 through 16 Sections for specific requirements for demonstration and training for products in those Sections.

1.3 SUBMITTALS

A. Instruction Program: Submit four copies of outline of instructional program for demonstration and training, including a schedule of proposed dates, times, length of instruction time, and instructors' names for each training module. Include learning objective and outline for each training module.

1. At completion of training, submit two complete training manual(s) for Owner's use.

B. Qualification Data: For instructor.

C. Attendance Record: For each training module, submit list of participants and length of instruction time.

1.4 QUALITY ASSURANCE

A. Instructor Qualifications: A factory-authorized service representative, complying with requirements in Division 1 Section "Quality Requirements," experienced in operation and maintenance procedures and training.

B. Preinstruction Conference: Conduct conference at Project site to comply with requirements in Division 1 Section "Project Management and Coordination." Review methods and procedures related to demonstration and training including, but not limited to, the following:

1. Inspect and discuss locations and other facilities required for instruction.

2. Review and finalize instruction schedule and verify availability of educational materials, instructors' personnel, audiovisual equipment, and facilities needed to avoid delays.

3. Review required content of instruction.

4. For instruction that must occur outside, review weather and forecasted weather conditions and procedures to follow if conditions are unfavorable.

1.5 COORDINATION

A. Coordinate instruction schedule with Owner's operations. Adjust schedule as required to minimize disrupting Owner's operations.

B. Coordinate instructors, including providing notification of dates, times, length of instruction time, and course content.

C. Coordinate content of training modules with content of approved emergency, operation, and maintenance manuals. Do not submit instruction program until operation and maintenance data has been reviewed and approved by Architect.

PART 2 - PRODUCTS

2.1 INSTRUCTION PROGRAM

A. Program Structure: Develop an instruction program that includes individual training modules for each system and equipment not part of a system, as required by individual Specification Sections, and as follows:

1. Equipment.
2. Fire-protection systems, including fire alarm, and fire-extinguishing systems.
3. Intrusion detection systems.
4. Heat generation, including boilers, pumps, and water distribution piping.
5. HVAC systems, including air-handling equipment, air distribution systems, and terminal equipment and devices.
6. HVAC instrumentation and controls.
7. Electrical service and distribution, including transformers, switchboards, panelboards, uninterruptible power supplies, and motor controls.
8. Lighting equipment and controls.
9. Communication systems, including intercommunication, surveillance clocks, and programming voice and data and television equipment.

B. Training Modules: Develop a learning objective and teaching outline for each module. Include a description of specific skills and knowledge that participant is expected to master. For each module, include instruction for the following:

1. Basis of System Design, Operational Requirements, and Criteria: Include the following:
   a. System, subsystem, and equipment descriptions.
   b. Performance and design criteria if Contractor is delegated design responsibility.
   c. Operating standards.
   d. Regulatory requirements.
   e. Equipment function.
   f. Operating characteristics.
   g. Limiting conditions.
   h. Performance curves.
2. Documentation: Review the following items in detail:
   a. Emergency manuals.
   b. Operations manuals.
   c. Maintenance manuals.

d. Project Record Documents.

e. Identification systems.

f. Warranties and bonds.

g. Maintenance service agreements and similar continuing commitments.

3. Emergencies: Include the following, as applicable:

a. Instructions on meaning of warnings, trouble indications, and error messages.

b. Instructions on stopping.

c. Shutdown instructions for each type of emergency.

d. Operating instructions for conditions outside of normal operating limits.

e. Sequences for electric or electronic systems.

f. Special operating instructions and procedures.

4. Operations: Include the following, as applicable:

a. Startup procedures.

b. Equipment or system break-in procedures.

c. Routine and normal operating instructions.

d. Regulation and control procedures.

e. Control sequences.

f. Safety procedures.

g. Instructions on stopping.

h. Normal shutdown instructions.

i. Operating procedures for emergencies.

j. Operating procedures for system, subsystem, or equipment failure.

k. Seasonal and weekend operating instructions.

l. Required sequences for electric or electronic systems.

m. Special operating instructions and procedures.

5. Adjustments: Include the following:

a. Alignments.

b. Checking adjustments.

c. Noise and vibration adjustments.

d. Economy and efficiency adjustments.

6. Troubleshooting: Include the following:

a. Diagnostic instructions.

b. Test and inspection procedures.

7. Maintenance: Include the following:

a. Inspection procedures.

b. Types of cleaning agents to be used and methods of cleaning.

c. List of cleaning agents and methods of cleaning detrimental to product.

d. Procedures for routine cleaning

e. Procedures for preventive maintenance.

f. Procedures for routine maintenance.

g. Instruction on use of special tools.

8. Repairs: Include the following:

a. Diagnosis instructions.

b. Repair instructions.

c. Disassembly; component removal, repair, and replacement; and reassembly instructions.

d. Instructions for identifying parts and components.

e. Review of spare parts needed for operation and maintenance.

PART 3 - EXECUTION

3.1 PREPARATION

A. Assemble educational materials necessary for instruction, including documentation and training module. Assemble training modules into a combined training manual.

B. Set up instructional equipment at instruction location.

3.2 INSTRUCTION

A. Engage qualified instructors to instruct Owner's personnel to adjust, operate, and maintain systems, subsystems, and equipment not part of a system.

B. Scheduling: Provide instruction at mutually agreed on times. For equipment that requires seasonal operation, provide similar instruction at start of each season.

1. Schedule training with Owner**,** through Architect, with at least seven days' advance notice.

C. Cleanup: Collect used and leftover educational materials and remove from Project site. Remove instructional equipment. Restore systems and equipment to condition existing before initial training use.

END OF SECTION 017900

SECTION 024113 – SELECTIVE SITE DEMOLITION

PART 1 GENERAL

A. SUMMARY:

1. This section requires the selective breaking up, dismantling and/or removal and subsequent offsite disposal of the following:

   a. Concrete;

   b. Concrete Curbing;

   c. Posts and Signs;

   d. Debris;

   e. Miscellaneous or Concrete Structures/Pads;

   f. Asphaltic Pavement; and

   g. Fences/Walls.

B. SUBMITTALS

1. Schedule indicating proposed sequence of operations for selective demolition work to Engineer for review prior to start of work. Include coordination for shutoff, capping, and continuation of utility services as required, together with details for dust and noise control protection. Should temporary utility services be required, Contractor shall make provisions for and coordinate with all utility companies for these services at no additional cost to the Owner.

2. Provide detailed sequence of demolition and removal work to ensure uninterrupted progress of possible on-site operations.

3. Photographs of existing conditions of structure surfaces, equipment, and adjacent improvements that might be misconstrued as damage related to removal or relocation operations. File with the El Paso International Airport (EPIA), City of El Paso, Project Architect or designated representative prior to start of work.

C. JOB CONDITIONS

1. Condition of structures: The Owner assumes no responsibility for actual condition of items to be demolished.

2. Conditions existing at time of inspection of bidding purposes will be maintained by the Owner insofar as practicable. However, minor variations within this project may occur by removal and salvage operations prior to start of selective demolition work.

3. Partial Demolition and Removal: Items indicated to be removed out of salvageable value is the property of the Owner.

4. Protections: Provide temporary barricades and other forms of protection to protect Contractor's personnel and general public from injury due to selective demolition work.

5. Provide protective measures as required to provide free and safe passage of Contractor's personnel and general public.

6. Protect from damage existing pipes or structures that are to remain in place and become exposed during demolition operations.

7. Construct temporary insulated dustproof partitions where required to separate areas where noisy or extensive dirt or dust operations are performed.

8. Damages: Promptly repair damages caused to pipes or structures by demolition work.

9. Traffic: Conduct selective demolition operations and debris removal to ensure minimum interference with roads, streets, walks, and other adjacent occupied or used facilities.

10. Do not close, block, or otherwise obstruct streets, walks, drives, aprons, or other occupied or used facilities without written permission from EPIA, the City of El Paso, Texas, or any other authorities having jurisdiction. Obtain permits for operations requiring closure of the walks and portions of the streets from authorities having jurisdiction. Provide alternate routes around closed or obstructed traffic ways if required by governing regulations. Contractor to submit a Pedestrian and Traffic Control Plan for approval prior to initiation of any work.

11. Flame Cutting: Do not use cutting torches for removal until work area is cleared of flammable materials. At concealed spaces, such as interior of ducts and pipe spaces, verify condition of hidden space before starting flame-cutting operations. Maintain portable fire suppressing devices during flame-cutting operations.

12. Utility Services: Maintain existing utilities indicated to remain in service and protect them against damage during demolition operations.

13. Do not interrupt utilities serving occupied or used facilities, except when authorized in writing by authorities having jurisdiction. Provide temporary services during interruptions to existing utilities, as acceptable to governing authorities.

14. Maintain fire protection services during selective demolition operations.

15. Environmental Controls: Use water sprinkling and other methods to limit dust and dirt migration. Comply with governing regulations pertaining to environmental protection.

16. Do not use water when it may create hazardous or objectionable conditions such as ice, flooding, and pollution.

II. MATERIALS

Not to be used.

III. EXECUTION

A. PREPARATION

It shall be the Contractor's responsibility to contact El Paso International Airport officials and all utility companies for the exact location of underground utilities including utilities not shown on the plans. The Contractor shall protect existing underground structures and utilities during construction.

B. DEMOLITION

1. General: Perform selective demolition work in a systematic manner. Use such methods as required to complete work indicated on Drawings in accordance with demolition schedule and governing regulations.

2. Existing concrete shall be broken into pieces not greater than 18 inches in any dimension by air-driven machinery or other suitable means. Existing concrete can consist of, but is not limited to sidewalks, driveways, curb and gutter, concrete drainage structures, rip-rap, foundations, footings and slabs.

3. In projects where only a portion of the existing concrete is to be removed, Contractor shall take special care to avoid damaging concrete that will remain. Contractor shall adhere to the neat lines shown on plans and/or established by the Project Engineer in cutting the existing concrete. Any concrete beyond the established neat lines which is damaged by these operations shall be replaced at the Contractor’s expense.

4. Provide services for effective air and water pollution controls as required by local authorities having jurisdiction.

5. If unanticipated mechanical, electrical, or structural elements that conflict with intended function or design are encountered, investigate and measure both nature and extent of the conflict. Submit report to the Engineer in written, accurate detail. Pending receipt of directive from the Engineer, rearrange selective demolition schedule as necessary to continue overall job progress without undue delay.

C. SALVAGED MATERIALS

1. Salvaged Items: Carefully remove salvageable items, clean, store, and turn over to the Owner and obtain receipt. The Owner reserves the right to identify salvageable items - until such time demolition operations are completed. If items are deemed not salvageable, the Contractor shall properly dispose of these items in accordance with all local, state and/or federal regulations at an approved offsite location.

2. Historic artifacts, including cornerstones and their contents, commemorative plaques and tablets, antiques, and other articles of historic significance, remain property of the City of El Paso and/or EPIA. Notify the Engineer if such items are encountered and obtain acceptance regarding method of removal and salvage to EPIA and/or City of El Paso.

D. DISPOSAL OF DEMOLISHED MATERIALS

1. Remove from site debris, rubbish, and other materials resulting from demolition operations. Transport and legally dispose off site.

2. Existing concrete, which is removed, as indicated on plans, shall be hauled and disposed of at designated points approved by the City of El Paso Texas, EPIA and/or designated representative. Existing concrete, not to be salvaged, shall be disposed of by the Contractor at locations obtained by him, and the provision that the concrete be broken into pieces no greater than 18 inches in any dimensions will not apply.

3. If hazardous materials are encountered during demolition operations, comply with applicable regulations, laws, and ordinances concerning removal, handling, and protection against exposure or environmental pollution.

4. Burning of removed materials is not permitted on project site.

E. CLEANUP AND REPAIR

1. General: Upon completion of demolition work, remove tools, equipment, and demolished materials from site.

2. Repair demolition performed in excess of that required. Return elements of construction and surfaces to remain to condition existing prior to start operations. Repair adjacent construction or surfaces soiled or damaged by selective demolition work.

END OF SECTION 024113

SECTION 024119 - SELECTIVE STRUCTURE DEMOLITION

PART 1 - GENERAL

1.1 RELATED DOCUMENTS

A. Drawings and general provisions of the Contract, including General and Supplementary Conditions and other Division 01 Specification Sections, apply to this Section.

1.2 SUMMARY

A. This Section includes the following:

1. Demolition and removal of selected portions of building or structure.

B. Related Sections include the following:

1. Division 01 Section "Summary" for use of premises, and phasing, and Owner-occupancy requirements.
2. Division 01 Section "Temporary Facilities and Controls" for temporary construction and environmental-protection measures for selective demolition operations.
3. Division 01 Section "Cutting and Patching" for cutting and patching procedures.

1.3 DEFINITIONS

A. Remove: Detach items from existing construction and legally dispose of them off-site, unless indicated to be removed and salvaged or removed and reinstalled.

B. Existing to Remain: Existing items of construction that are not to be removed and that are not otherwise indicated to be removed, removed and salvaged, or removed and reinstalled.

1.4 SUBMITTALS

A. Schedule of Selective Demolition Activities: Indicate the following:

1. Detailed sequence of selective demolition and removal work, with starting and ending dates for each activity. Ensure Owner's on-site operations are un-interrupted.
2. Interruption of utility services. Indicate how long utility services will be interrupted.
3. Coordination for shutoff, capping, and continuation of utility services.
4. Use of stairs.
5. Locations of proposed dust- and noise-control temporary partitions and means of egress.
6. Coordination of Owner's continuing occupancy of portions of existing building and of Owner's partial occupancy of completed Work.
7. Means of protection for items to remain and items in path of waste removal from building.

B. Pre-demolition Photographs: Show existing conditions of adjoining construction and site improvements, including finish surfaces that might be misconstrued as damage caused by selective demolition operations. Submit before Work begins.

C. Landfill Records: Indicate receipt and acceptance of hazardous wastes by a landfill facility licensed to accept hazardous wastes.

1.5 QUALITY ASSURANCE

A. Demolition Firm Qualifications: An experienced firm that has specialized in demolition work similar in material and extent to that indicated for this Project.

B. Regulatory Requirements: Comply with governing EPA notification regulations before beginning selective demolition. Comply with hauling and disposal regulations of authorities having jurisdiction.

C. Standards: Comply with ANSI A10.6 and NFPA 241.

D. Pre-demolition Conference: Conduct conference at Project site to comply with requirements in Division 01 Section "Project Management and Coordination."

1.6 PROJECT CONDITIONS

A. Notify Architect of discrepancies between existing conditions and Drawings before proceeding with selective demolition.

B. Hazardous Materials: It is not expected that hazardous materials will be encountered in the Work.

1. If materials suspected of containing hazardous materials are encountered, do not disturb; immediately notify Architect and Owner. Owner will remove hazardous materials under a separate contract.

C. Storage or sale of removed items or materials on-site is not permitted.

D. Utility Service: Maintain existing utilities indicated to remain in service and protect them against damage during selective demolition operations.

1. Maintain fire-protection facilities in service during selective demolition operations.

1.7 WARRANTY

A. Existing Warranties: Remove, replace, patch, and repair materials and surfaces cut or damaged during selective demolition, by methods and with materials so as not to void existing warranties.

PART 2 - PRODUCTS (Not Used)

PART 3 - EXECUTION

3.1 EXAMINATION

A. Verify that utilities have been disconnected and capped.

B. Survey existing conditions and correlate with requirements indicated to determine extent of selective demolition required.

C. Inventory and record the condition of items to be removed and reinstalled and items to be removed and salvaged.

D. When unanticipated mechanical, electrical, or structural elements that conflict with intended function or design are encountered, investigate and measure the nature and extent of conflict. Promptly submit a written report to Architect.

E. Survey of Existing Conditions: Record existing conditions by use of pre-construction photographs or pre-construction videotapes.

1. Before selective demolition or removal of existing building elements that will be reproduced or duplicated in final Work, make permanent record of measurements, materials, and construction details required to make exact reproduction.

F. Perform surveys as the Work progresses to detect hazards resulting from selective demolition activities.

3.2 UTILITY SERVICES AND MECHANICAL/ELECTRICAL SYSTEMS

A. Existing Services/Systems: Maintain services/systems indicated to remain and protect them against damage during selective demolition operations.

1. Comply with requirements for existing services/systems interruptions specified in Division 01 Section "Summary."

B. Service/System Requirements: Locate, identify, disconnect, and seal or cap off indicated utility services and mechanical/electrical systems serving areas to be selectively demolished.

1. Owner will arrange to shut off indicated services/systems when requested by Contractor.
2. Arrange to shut off indicated utilities with utility companies.
3. If services/systems are required to be removed, relocated, or abandoned, before proceeding with selective demolition provide temporary services/systems that bypass area of selective demolition and that maintain continuity of services/systems to other parts of building.
4. Cut off pipe or conduit in walls or partitions to be removed. Cap, valve, or plug and seal remaining portion of pipe or conduit after bypassing.

a. Where entire wall is to be removed, existing services/systems may be removed with removal of the wall.

3.3 PREPARATION

A. Site Access and Temporary Controls: Conduct selective demolition and debris-removal operations to ensure minimum interference with roads, streets, walks, walkways, and other adjacent occupied and used facilities.

1. Comply with requirements for access and protection specified in Division 01 Section "Temporary Facilities and Controls."

B. Temporary Facilities: Provide temporary barricades and other protection required to prevent injury to people and damage to adjacent buildings and facilities to remain.

1. Provide protection to ensure safe passage of people around selective demolition area and to and from occupied portions of building.
2. Provide temporary weather protection, during interval between selective demolition of existing construction on exterior surfaces and new construction, to prevent water leakage and damage to structure and interior areas.
3. Protect walls, ceilings, floors, and other existing finish work that are to remain or that are exposed during selective demolition operations.
4. Cover and protect furniture, furnishings, and equipment that have not been removed.
5. Comply with requirements for temporary enclosures, dust control, heating, and cooling specified in Division 01 Section "Temporary Facilities and Controls."

C. Temporary Shoring: Provide and maintain shoring, bracing, and structural supports as required to preserve stability and prevent movement, settlement, or collapse of construction and finishes to remain, and to prevent unexpected or uncontrolled movement or collapse of construction being demolished.

1. Strengthen or add new supports when required during progress of selective demolition.

3.4 SELECTIVE DEMOLITION, GENERAL

A. General: Demolish and remove existing construction only to the extent required by new construction and as indicated. Use methods required to complete the Work within limitations of governing regulations and as follows:

1. Proceed with selective demolition systematically, from higher to lower level. Complete selective demolition operations above each floor or tier before disturbing supporting members on the next lower level.
2. Neatly cut openings and holes plumb, square, and true to dimensions required. Use cutting methods least likely to damage construction to remain or adjoining construction. Use hand tools or small power tools designed for sawing or grinding, not hammering and chopping, to minimize disturbance of adjacent surfaces. Temporarily cover openings to remain.
3. Cut or drill from the exposed or finished side into concealed surfaces to avoid marring existing finished surfaces.

4. Do not use cutting torches until work area is cleared of flammable materials. At concealed spaces, such as duct and pipe interiors, verify condition and contents of hidden space before starting flame-cutting operations. Maintain fire watch and portable fire-suppression devices during flame-cutting operations.
5. Maintain adequate ventilation when using cutting torches.
6. Remove decayed, vermin-infested, or otherwise dangerous or unsuitable materials and promptly dispose of off-site.
7. Remove structural framing members and lower to ground by method suitable to avoid free fall and to prevent ground impact or dust generation.
8. Locate selective demolition equipment and remove debris and materials so as not to impose excessive loads on supporting walls, floors, or framing.
9. Dispose of demolished items and materials promptly.

B. Removed and Salvaged Items:

1. Clean salvaged items.
2. Pack or crate items after cleaning. Identify contents of containers.
3. Store items in a secure area until delivery to Owner.
4. Transport items to Owner's storage area off-site designated by Owner.
5. Protect items from damage during transport and storage.

C. Removed and Reinstalled Items:

1. Clean and repair items to functional condition adequate for intended reuse. Paint equipment to match new equipment.
2. Pack or crate items after cleaning and repairing. Identify contents of containers.
3. Protect items from damage during transport and storage.
4. Reinstall items in locations indicated. Comply with installation requirements for new materials and equipment. Provide connections, supports, and miscellaneous materials necessary to make item functional for use indicated.

D. Existing Items to Remain: Protect construction indicated to remain against damage and soiling during selective demolition. When permitted by Architect, items may be removed to a suitable, protected storage location during selective demolition and cleaned and reinstalled in their original locations after selective demolition operations are complete.

3.5 SELECTIVE DEMOLITION PROCEDURES FOR SPECIFIC MATERIALS

A. Concrete: Demolish in small sections. Cut concrete to a depth of at least 3/4 inch (19 mm) at junctures with construction to remain, using power-driven saw. Dislodge concrete from reinforcement at perimeter of areas being demolished, cut reinforcement, and then remove remainder of concrete indicated for selective demolition. Neatly trim openings to dimensions indicated.

B. Masonry: Demolish in small sections. Cut masonry at junctures with construction to remain, using power-driven saw, then remove masonry between saw cuts.

C. Concrete Slabs-on-Grade: Saw-cut perimeter of area to be demolished, then break up and remove.

D. Resilient Floor Coverings: Remove floor coverings and adhesive according to recommendations in RFCI-WP and its Addendum.

1. Remove residual adhesive and prepare substrate for new floor coverings by one of the methods recommended by RFCI.

3.6 DISPOSAL OF DEMOLISHED MATERIALS

A. General: Except for items or materials indicated to be reused, salvaged, reinstalled, or otherwise indicated to remain Owner's property, remove demolished materials from Project site and legally dispose of them in an EPA-approved landfill.

1. Do not allow demolished materials to accumulate on-site.
2. Remove and transport debris in a manner that will prevent spillage on adjacent surfaces and areas.

B. Burning: Do not burn demolished materials.

C. Disposal: Transport demolished materials off Owner's property and legally dispose of them.

3.7 CLEANING

A. Clean adjacent structures and improvements of dust, dirt, and debris caused by selective demolition operations. Return adjacent areas to condition existing before selective demolition operations began.

END OF SECTION 024119

SECTION 033000 - CAST-IN-PLACE CONCRETE

PART 1 - GENERAL

1.1 RELATED DOCUMENTS

A. Drawings and general provisions of Contract, including General and Supplementary Conditions and Division 01 Specification Sections, apply to this Section.

1.2 SUMMARY

A. This Section specifies cast-in place concrete, including formwork, reinforcing, mix design, placement procedures, and finishes.

1.3 SUBMITTALS

A. General: Submit the following in accordance with Conditions of Contract and Division 1 Specification Sections.

B. Product data for proprietary materials and items, including reinforcement and forming accessories, admixtures, patching compounds, curing compounds, and others as requested by Architect.

C. Design Mixtures: For each concrete mixture. Submit alternate design mixtures when characteristics of materials, Project conditions, weather, test results, or other circumstances warrant adjustments.

1. Indicate amounts of mixing water to be withheld for later addition at Project site

D. Shop drawings for reinforcement, prepared by registered Professional Engineer for fabrication, bending, and placement of concrete reinforcement. Comply with ACI SP-66 (88), "ACI Detailing Manual," showing bar schedules, stirrup spacing, diagrams of bent bars, and arrangement of concrete reinforcement. Include special reinforcement required for openings through concrete structures.

E. Laboratory test reports for concrete materials and mix design test.

F. Materials certificates in lieu of materials laboratory test reports when permitted by Architect. Materials certificates shall be signed by manufacturer and Contractor, certifying that each material item complies with or exceeds specified requirements. Provide certification from admixture manufacturers that chloride content complies with specification requirements.

1.4 QUALITY ASSURANCE

A. Codes and Standards: Comply with provisions of following codes, specifications, and standards, except where more stringent requirements are shown or specified:

1. ACI 318, "Building Code Requirements for Reinforced Concrete."

2. Concrete Reinforcing Steel Institute (CRSI), "Manual of Standard Practice."

B. Materials and installed work may require testing and retesting at any time during progress of work. Tests, including retesting of rejected materials for installed work, shall be done at Contractor's expense.

PART 2 - PRODUCTS

2.1 FORM MATERIALS

A. Forms for Exposed Finish Concrete: Plywood, metal, metal-framed plywood faced, or other acceptable panel-type materials, to provide continuous, straight, smooth, exposed surfaces. Furnish in largest practicable sizes to minimize number of joints and to conform to joint system shown on drawings.

B. Forms for Unexposed Finish Concrete: Plywood, lumber, metal, or other acceptable material. Provide lumber dressed on at least 2 edges and one side for tight fit.

C. Form Coatings: Provide commercial formulation form-coating compounds with a maximum VOC of 350 mg/l that will not bond with, stain, or adversely affect concrete surfaces and will not impair subsequent treatments of concrete surfaces.

D. Form Ties: Factory-fabricated, adjustable-length, removable or snap-off metal form ties, designed to prevent form deflection and to prevent spalling concrete upon removal. Provide units that will leave no metal closer than 1-1/2 inches to exposed surface.

1. Provide ties that, when removed, will leave holes not larger than 1-inch diameter in concrete surface.

2.2 REINFORCING MATERIALS

A. Recycled Content of Steel Products: Postconsumer recycled content plus one-half of preconsumer recycled content not less than 25 percent.

B. Reinforcing Bars: ASTM A 615, Grade 60, deformed.

C. Steel Wire: ASTM A 82, plain, cold-drawn steel.

D. Welded Wire Fabric: ASTM A 185, welded steel wire fabric.

E. Supports for Reinforcement: Bolsters, chairs, spacers, and other devices for spacing, supporting, and fastening reinforcing bars and welded wire fabric in place. Use wire-bar-type supports complying with CRSI specifications.

1. For slabs-on-grade, use supports with sand plates or horizontal runners where base material will not support chair legs.

2. For exposed-to-view concrete surfaces, where legs of supports are in contact with forms, provide supports with legs that are plastic protected (CRSI, Class 1) or stainless steel protected (CRSI, Class 2).

2.4 CONCRETE MATERIALS

A. Portland Cement: ASTM C 150, Type I.

1. Use one brand of cement throughout project unless otherwise acceptable to Architect.

B. Fly Ash: ASTM C 618, Type C or Type F.

C. Normal Weight Aggregates: ASTM C 33 and as herein specified. Provide aggregates from a single source for exposed concrete.

1. For exterior exposed surfaces, do not use fine or coarse aggregates containing spalling-causing deleterious substances.

2. Local aggregates not complying with ASTM C 33 but that special tests or actual service have shown to produce concrete of adequate strength and durability may be used when acceptable to Architect.

D. Water: Drinkable.

E. Admixtures, General: Provide admixtures for concrete that contain not more than 0.1 percent chloride ions.

F. Air-Entraining Admixture: ASTM C 260, certified by manufacturer to be compatible with other required admixtures.

1. Available Products: Subject to compliance with requirements, products that may be incorporated in the work include, but are not limited to, the following:
(1) "Air-Tite," Cormix.
(2) "Air-Mix" or "Perma-Air," Euclid Chemical Co.
(3) "Darex AEA" or "Daravair," W.R. Grace & Co.
(4) "MB-VR" or "Micro-Air," Master Builders, Inc.
(5) "Sealtight AEA," W.R. Meadows, Inc.
(6) "Sika AER," Sika Corp.

G. Water-Reducing Admixture: ASTM C 494, Type A.

1. Available Products: Subject to compliance with requirements, products that may be incorporated in the work include, but are not limited to, the following:

(1) "Chemtard," ChemMasters Corp.
(2) "PSI N," Cormix.
(3) "Eucon WR-75," Euclid Chemical Co.
(4) "WRDA," W.R. Grace & Co.
(5) "Pozzolith Normal" or "Polyheed," Master Builders, Inc.
(6) "Prokrete-N," Prokrete Industries.
(7) "Plastocrete 161," Sika Corp.

H. High-Range Water-Reducing Admixture (Super Plasticizer): ASTM C 494, Type F or Type G.
1. Available Products: Subject to compliance with requirements, products that may be incorporated in the work include, but are not limited to, the following:

(1) "Super P," Anti-Hydro Co., Inc.
(2) "PSI Super," Cormix.
(3) "Eucon 37," Euclid Chemical Co.
(4) "WRDA 19" or "Daracem," W.R. Grace & Co.
(5) "Rheobuild," Master Builders, Inc.
(6) "PSP," Prokrete Industries.
(7) "Sikament 300," Sika Corp.

I. Water-Reducing, Accelerating Admixture: ASTM C 494, Type E.

1. Available Products: Subject to compliance with requirements, products that may be incorporated in the work include, but are not limited to, the following:

(1) "Q-Set," Conspec Marketing & Manufacturing Co.
(2) "Gilco Accelerator," Cormix.
(3) "Accelguard 80," Euclid Chemical Co.
(4) "Daraset," W.R. Grace & Co.
(5) "Pozzutec 20," Master Builders, Inc.

J. Water-Reducing, Retarding Admixture: ASTM C 494, Type D.

1. Available Products: Subject to compliance with requirements, products that may be incorporated in the work include, but are not limited to, the following:

(1) "PSI-R Plus," Cormix.
(2) "Eucon Retarder 75," Euclid Chemical Co.
(3) "Daratard-17," W.R. Grace & Co.
(4) "Pozzolith R," Master Builders, Inc.
(5) "Protard," Prokrete Industries.
(6) "Plastiment," Sika Corporation.

2.5 RELATED MATERIALS

A. Absorptive Cover: Burlap cloth made from jute or kenaf, weighing approximately 9 oz. per sq. yd., complying with AASHTO M 182, Class 2.

B. Moisture-Retaining Cover: One of the following, complying with ASTM C 171.

1. Waterproof paper.

2. Polyethylene film.

3. Polyethylene-coated burlap.

C. Liquid Membrane-Forming Curing Compound: Liquid-type membrane forming curing compound complying with ASTM C 309, Type I, Class A. Moisture loss not more than 0.055 gr./sq. cm. when applied at 200 sq. ft./gal.

1. Available Products: Subject to compliance with requirements, products that may be incorporated in the work include, but are not limited to, the following:

(1) "A-H 3 Way Sealer," Anti-Hydro Co., Inc.
(2) "Spartan-Cote," The Burke Co.
(3) "Conspec #1," Conspec Marketing & Mfg. Co.
(4) "Hardtop," Cormix.
(5) "Day-Chem Cure and Seal," Dayton Superior Corp.
(6) "Eucocure," Euclid Chemical Co.
(7) "Horn Clear Seal," A.C. Horn, Inc.
(8) "L&M Cure," L & M Construction Chemicals, Inc.
(9) "Masterkure," Master Builders, Inc.
(10) "CS-309," W.R. Meadows, Inc.
(11) "LR-151," Prokrete Industries.
(12) "Kure-N-Seal," Sonneborn-Rexnord.
(13) "Stontop CS2," Stonhard, Inc.

D. Water-Based Acrylic Membrane Curing Compound: ASTM C 309, Type I, Class B.

1. Available Products: Subject to compliance with requirements, products that may be incorporated in the work include, but are not limited to, the following:
(1) "Highseal," Conspec Marketing and Mfg. Co.
(2) "Safe Cure and Seal," Dayton Superior Corp.
(3) "Aqua-Cure," Euclid Chemical Co.
(4) "Dress & Seal #18WB," L&M Construction Chemicals, Inc.
(5) "Masterseal W," Master Builders, Inc.
(6) "Intex," W.R. Meadows, Inc.
(7) "Sika Membrane," Sika Corp.

E. Evaporation Control: Monomolecular film-forming compound applied to exposed concrete slab surfaces for temporary protection from rapid moisture loss.

1. Available Products: Subject to compliance with requirements, products that may be incorporated in the work include, but are not limited to, the following:

(1) "Aquafilm," Ardex, Inc.
(2) "Eucobar," Euclid Chemical Co.
(3) "E-Con," L&M Construction Chemicals, Inc.
(4) "Confilm," Master Builders, Inc.

2.6 PROPORTIONING AND DESIGN OF MIXES

A. Prepare design mixes for each type and strength of concrete by either laboratory trial batch or field experience methods as specified in ACI 301. If trial batch method used, use an independent testing facility acceptable to Architect for preparing and reporting proposed mix designs. The testing facility shall not be the same as used for field quality control testing.

1. Limit use of fly ash to not exceed 25 percent of cement content by weight.

B. Submit written reports to Architect of each proposed mix for each class of concrete at least 15 days prior to start of work. Do not begin concrete production until proposed mix designs have been reviewed by Architect.

C. Design mixes to provide normal weight concrete with the following properties, as indicated on drawings and schedules:

1. 3000-psi, 28-day compressive strength; W/C ratio, 0.46 maximum

D. Adjustment to Concrete Mixes: Mix design adjustments may be requested by Contractor when characteristics of materials, job conditions, weather, test results, or other circumstances warrant, as accepted by Architect. Laboratory test data for revised mix design and strength results must be submitted to and accepted by Architect before using in work.

2.7 ADMIXTURES

A. Use water-reducing admixture or high-range water-reducing admixture (Superplasticizer) in concrete as required for placement and workability.

B. Use nonchloride accelerating admixture in concrete slabs placed at ambient temperatures below 50 deg F (10 deg C).

C. Use high-range water-reducing admixture (HRWR) in pumped concrete, concrete for industrial slabs, architectural concrete, parking structure slabs, concrete required to be watertight, and concrete with water/cement ratios below 0.50.

D. Use air-entraining admixture in all concrete. Add air-entraining admixture at manufacturer's prescribed rate to result in concrete at point of placement having total air content with a tolerance of plus or minus 1-1/2 percent within following limits:
(1) 6.0 percent 3/4-inch to 1-1/2-inch max. aggregate.

E. Use admixtures for water reduction and set control in strict compliance with manufacturer's directions.

F. Slump Limits: Proportion and design mixes to result in concrete slump at point of placement as follows:

1. Ramps, slabs, and sloping surfaces: Not more than 3 inches.

2. Reinforced foundation systems: Not less than 1 inch and not more than 3 inches.

3. Concrete containing HRWR admixture (Superplasticizer): Not more than 8 inches after addition of HRWR to site-verified 2-inch to 3-inch slump concrete.

4. Other concrete: Not more than 4 inches.

2.8 CONCRETE MIXING

A. Ready-Mix Concrete: Comply with requirements of ASTM C 94, and as specified.

1. When air temperature is between 85 deg F (30 deg C) and 90 deg F (32 deg C), reduce mixing and delivery time from 1-1/2 hours to 75 minutes, and when air temperature is above 90 deg F (32 deg C), reduce mixing and delivery time to 60 minutes.

PART 3 - EXECUTION

3.1 GENERAL

A. Coordinate the installation of joint materials with placement of forms and reinforcing steel.

3.2 FORMS

A. General: Design, erect, support, brace, and maintain formwork to support vertical and lateral, static and dynamic loads that might be applied until concrete structure can support such loads. Construct formwork so concrete members and structures are of correct size, shape, alignment, elevation, and position. Maintain formwork construction tolerances complying with ACI 347.

B. Construct forms to sizes, shapes, lines, and dimensions shown and to obtain accurate alignment, location, grades, level, and plumb work in finished structures. Provide for openings, offsets, sinkages, keyways, recesses, moldings, rustications, reglets, chamfers, blocking, screeds, bulkheads, anchorages and inserts, and other features required in work. Use selected materials to obtain required finishes. Solidly butt joints and provide backup at joints to prevent leakage of cement paste.

C. Fabricate forms for easy removal without hammering or prying against concrete surfaces. Provide crush plates or wrecking plates where stripping may damage cast concrete surfaces. Provide top forms for inclined surfaces where slope is too steep to place concrete with bottom forms only. Kerf wood inserts for forming keyways, reglets, recesses, and the like, for easy removal.

D. Provide temporary openings where interior area of formwork is inaccessible for cleanout, for inspection before concrete placement, and for placement of concrete. Securely brace temporary openings and set tightly to forms to prevent loss of concrete mortar. Locate temporary openings in forms at inconspicuous locations.

E. Chamfer exposed corners and edges as indicated, using wood, metal, PVC, or rubber chamfer strips fabricated to produce uniform smooth lines and tight edge joints.

F. Provisions for Other Trades: Provide openings in concrete formwork to accommodate work of other trades. Determine size and location of openings, recesses, and chases from trades providing such items. Accurately place and securely support items built into forms.

G. Cleaning and Tightening: Thoroughly clean forms and adjacent surfaces to receive concrete. Remove chips, wood, sawdust, dirt, or other debris just before concrete is placed. Retighten forms and bracing before concrete placement as required to prevent mortar leaks and maintain proper alignment.

3.4 PLACING REINFORCEMENT

A. General: Comply with Concrete Reinforcing Steel Institute's recommended practice for "Placing Reinforcing Bars," for details and methods of reinforcement placement and supports and as herein specified.

1. Avoiding cutting or puncturing vapor retarder during reinforcement placement and concreting operations.

B. Clean reinforcement of loose rust and mill scale, earth, ice, and other materials that reduce or destroy bond with concrete.

C. Accurately position, support, and secure reinforcement against displacement. Locate and support reinforcing by metal chairs, runners, bolsters, spacers, and hangers, as approved by Architect.

D. Place reinforcement to obtain at least minimum coverages for concrete protection. Arrange, space, and securely tie bars and bar supports to hold reinforcement in position during concrete placement operations. Set wire ties so ends are directed into concrete, not toward exposed concrete surfaces.

E. Install welded wire fabric in as long lengths as practicable. Lap adjoining pieces at least one full mesh and lace splices with wire. Offset laps of adjoining widths to prevent continuous laps in either direction.

3.5 JOINTS

A. Construction Joints: Locate and install construction joints as indicated or, if not indicated, locate so as not to impair strength and appearance of the structure, as acceptable to Architect.

B. Provide keyways at least 1-1/2 inches deep in construction joints in walls and slabs and between walls and footings. Accepted bulkheads designed for this purpose may be used for slabs.

C. Place construction joints perpendicular to main reinforcement. Continue reinforcement across construction joints.

3.6 INSTALLATION OF EMBEDDED ITEMS

A. General: Set and build into work anchorage devices and other embedded items required for other work that is attached to or supported by cast-in-place concrete. Use setting drawings, diagrams, instructions, and directions provided by suppliers of items to be attached thereto.

B. Forms for Slabs: Set edge forms, bulkheads, and intermediate screed strips for slabs to obtain required elevations and contours in finished surfaces. Provide and secure units to support screed strips using strike-off templates or compacting- type screeds.

3.8 PREPARATION OF FORM SURFACES

A. General: Coat contact surfaces of forms with an approved, nonresidual, low-VOC, form-coating compound before reinforcement is placed.

B. Do not allow excess form-coating material to accumulate in forms or to come into contact with in-place concrete surfaces against which fresh concrete will be placed. Apply in compliance with manufacturer's instructions.

3.9 CONCRETE PLACEMENT

A. Inspection: Before placing concrete, inspect and complete formwork installation, reinforcing steel, and items to be embedded or cast in. Notify other crafts to permit installation of their work; cooperate with other trades in setting such work.

B. General: Comply with ACI 304, "Recommended Practice for Measuring, Mixing, Transporting, and Placing Concrete," and as herein specified.

C. Deposit concrete continuously or in layers of such thickness that no concrete will be placed on concrete that has hardened sufficiently to cause the formation of seams or planes of weakness. If a section cannot be placed continuously, provide construction joints as herein specified. Deposit concrete to avoid segregation at its final location.

D. Placing Concrete in Forms: Deposit concrete in forms in horizontal layers not deeper than 24 inches and in a manner to avoid inclined construction joints. Where placement consists of several layers, place each layer while preceding layer is still plastic to avoid cold joints.

1. Consolidate placed concrete by mechanical vibrating equipment supplemented by hand-spading, rodding, or tamping. Use equipment and procedures for consolidation of concrete in accordance with ACI 309.

2. Do not use vibrators to transport concrete inside forms. Insert and withdraw vibrators vertically at uniformly spaced locations not farther than visible effectiveness of machine. Place vibrators to rapidly penetrate placed layer and at least 6 inches into preceding layer. Do not insert vibrators into lower layers of concrete that have begun to set. At each insertion limit duration of vibration to time necessary to consolidate concrete and complete embedment of reinforcement and other embedded items without causing segregation of mix.

E. Placing Concrete Slabs: Deposit and consolidate concrete slabs in a continuous operation, within limits of construction joints, until the placing of a panel or section is completed.

1. Consolidate concrete during placing operations so that concrete is thoroughly worked around reinforcement and other embedded items and into corners.

2. Bring slab surfaces to correct level with straightedge and strike off. Use bull floats or darbies to smooth surface, free of humps or hollows. Do not disturb slab surfaces prior to beginning finishing operations.

3. Maintain reinforcing in proper position during concrete placement.

F. Cold-Weather Placing: Comply with provisions of ACI 306 and as follows. Protect concrete work from physical damage or reduced strength that could be caused by frost, freezing actions, or low temperatures.

G. When air temperature has fallen to or is expected to fall below 40 deg F (4 deg C), uniformly heat water and aggregates before mixing to obtain a concrete mixture temperature of not less than 50 deg F (10 deg C) and not more than 80 deg F (27 deg C) at point of placement.

1. Do not use frozen materials or materials containing ice or snow. Do not place concrete on frozen subgrade or on subgrade containing frozen materials.

2. Do not use calcium chloride, salt, and other materials containing antifreeze agents or chemical accelerators unless otherwise accepted in mix designs.

H. Hot-Weather Placing: When hot weather conditions exist that would seriously impair quality and strength of concrete, place concrete in compliance with ACI 305 and as herein specified.

1. Cool ingredients before mixing to maintain concrete temperature at time of placement below 90 deg F (32 deg C). Mixing water may be chilled, or chopped ice may be used to control temperature provided water equivalent of ice is calculated to total amount of mixing water. Use of liquid nitrogen to cool concrete is Contractor's option.

2. Cover reinforcing steel with water-soaked burlap if it becomes too hot, so that steel temperature will not exceed the ambient air temperature immediately before embedment in concrete.

3. Fog spray forms, reinforcing steel, and subgrade just before concrete is placed.

4. Use water-reducing retarding admixture when required by high temperatures, low humidity, or other adverse placing conditions, when acceptable to Architect.

3.10 FINISH OF FORMED SURFACES

A. Rough Form Finish: For formed concrete surfaces not exposed to view in the finish work or concealed by other construction. This is the concrete surface having texture imparted by form-facing material used, with tie holes and defective areas repaired and patched and fins and other projections exceeding 1/4 inch in height rubbed down or chipped off.

B. Smooth Form Finish: For formed concrete surfaces exposed to view or to be covered with a coating material applied directly to concrete, or a covering material applied directly to concrete, such as waterproofing, dampproofing, veneer plaster, painting, or other similar system. This is an as-cast concrete surface obtained with selected form-facing material, arranged in an orderly and symmetrical manner with a minimum of seams. Repair and patch defective areas with fins and other projections completely removed and smoothed.

C. Grout-Cleaned Finish: Provide grout-cleaned finish to scheduled concrete surfaces that have received smooth form finish treatment.

1. Combine one part portland cement to 1-1/2 parts fine sand by volume, and a 50:50 mixture of acrylic or styrene butadiene- based bonding admixture and water to consistency of thick

paint. Blend standard portland cement and white portland cement, amounts determined by trial patches, so that final color of dry grout will match adjacent surfaces.

2. Thoroughly wet concrete surfaces, apply grout to coat surfaces, and fill small holes. Remove excess grout by scraping and rubbing with clean burlap. Keep damp by fog spray for at least 36 hours after rubbing.

D. Related Unformed Surfaces: At tops of walls, horizontal offsets, and similar unformed surfaces occurring adjacent to formed surfaces, strike-off smooth and finish with a texture matching adjacent formed surfaces. Continue final surface treatment of formed surfaces uniformly across adjacent unformed surfaces unless otherwise indicated.

3.11 MONOLITHIC SLAB FINISHES

A. Float Finish: Apply float finish to monolithic slab surfaces to receive trowel finish and other finishes as hereinafter specified; slab surfaces to be covered with membrane or elastic waterproofing, membrane or elastic roofing, or sand-bed terrazzo; and as otherwise indicated.

1. After screeding, consolidating, and leveling concrete slabs, do not work surface until ready for floating. Begin floating, using float blades or float shoes only, when surface water has disappeared, when concrete has stiffened sufficiently to permit operation of power-driven floats, or both. Consolidate surface with power-driven floats or by hand-floating if area is small or inaccessible to power units. Check and level surface plane to tolerances of Ff 18 - Fl 15. Cut down high spots and fill low spots. Uniformly slope surfaces to drains. Immediately after leveling, refloat surface to a uniform, smooth, granular texture.

B. Trowel Finish: Apply trowel finish to monolithic slab surfaces to be exposed to view and slab surfaces to be covered with resilient flooring, carpet, ceramic or quarry tile, paint, or other thin film finish coating system.

1. After floating, begin first trowel finish operation using a power-driven trowel. Begin final troweling when surface produces a ringing sound as trowel is moved over surface. Consolidate concrete surface by final hand-troweling operation, free of trowel marks, uniform in texture and appearance, and with surface leveled to tolerances of Ff 20 - Fl 17. Grind smooth surface defects that would telegraph through applied floor covering system.

C. Trowel and Fine Broom Finish: Where ceramic or quarry tile is to be installed with thin-set mortar, apply trowel finish as specified, then immediately follow with slightly scarifying surface by fine brooming.

D. Nonslip Broom Finish: Apply nonslip broom finish to exterior concrete platforms, steps, and ramps, and elsewhere as indicated.

1. Immediately after float finishing, slightly roughen concrete surface by brooming with fiber-bristle broom perpendicular to main traffic route. Coordinate required final finish with Architect before application.

3.12 CONCRETE CURING AND PROTECTION

A. General: Protect freshly placed concrete from premature drying and excessive cold or hot temperatures. In hot, dry, and windy weather, protect concrete from rapid moisture loss before and during finishing operations with an evaporation-control material. Apply in accordance with manufacturer's instructions after screeding and bull floating, but before power floating and troweling.

B. Start initial curing as soon as free water has disappeared from concrete surface after placing and finishing. Weather permitting, keep continuously moist for not less than 7 days.

C. Curing Methods: Perform curing of concrete by curing and sealing compound, by moist curing, by moisture-retaining cover curing, and by combinations thereof, as herein specified.

D. Provide moisture curing by following methods.

1. Keep concrete surface continuously wet by covering with water.

2. Use continuous water-fog spray.

3. Cover concrete surface with specified absorptive cover, thoroughly saturate cover with water, and keep continuously wet. Place absorptive cover to provide coverage of concrete surfaces and edges, with 4-inch lap over adjacent absorptive covers.

E. Provide moisture-cover curing as follows:

1. Cover concrete surfaces with moisture-retaining cover for curing concrete, placed in widest practicable width with sides and ends lapped at least 3 inches and sealed by waterproof tape or adhesive. Immediately repair any holes or tears during curing period using cover material and waterproof tape.

F. Provide curing and sealing compound to exposed interior slabs and to exterior slabs, walks, and curbs as follows:

1. Apply specified curing and sealing compound to concrete slabs as soon as final finishing operations are complete (within 2 hours and after surface water sheen has disappeared). Apply uniformly in continuous operation by power spray or roller in accordance with manufacturer's directions. Recoat areas subjected to heavy rainfall within 3 hours after initial application. Maintain continuity of coating and repair damage during curing period.

2. Use membrane curing compounds that will not affect surfaces to be covered with finish materials applied directly to concrete.

G. Curing Formed Surfaces: Cure formed concrete surfaces, including underside of beams, supported slabs, and other similar surfaces, by moist curing with forms in place for full curing period or until forms are removed. If forms are removed, continue curing by methods specified above, as applicable.

H. Curing Unformed Surfaces: Cure unformed surfaces, such as slabs, floor topping, and other flat surfaces, by application of appropriate curing method.

I. Final cure concrete surfaces to receive liquid floor hardener or finish flooring by use of moisture-retaining cover, unless otherwise directed.

3.13 REMOVAL OF FORMS

A. General: Formwork not supporting weight of concrete, such as sides of beams, walls, columns, and similar parts of the work, may be removed after cumulatively curing at not less than 50 deg F (10 deg C) for 24 hours after placing concrete, provided concrete is sufficiently hard to not be damaged by form-removal operations, and provided curing and protection operations are maintained.

B. Formwork supporting weight of concrete, such as beam soffits, joists, slabs, and other structural elements, may not be removed in less than 14 days and until concrete has attained at least 75 percent of design minimum compressive strength at 28 days. Determine potential compressive strength of in-place concrete by testing field-cured specimens representative of concrete location or members.

C. Form-facing material may be removed 4 days after placement only if shores and other vertical supports have been arranged to permit removal of form-facing material without loosening or disturbing shores and supports.

3.14 REUSE OF FORMS

A. Clean and repair surfaces of forms to be reused in work. Split, frayed, delaminated, or otherwise damaged form-facing material will not be acceptable for exposed surfaces. Apply new form-coating compound as specified for new formwork.

B. When forms are extended for successive concrete placement, thoroughly clean surfaces, remove fins and laitance, and tighten forms to close joints. Align and secure joint to avoid offsets. Do not use "patched" forms for exposed concrete surfaces except as acceptable to Architect.

3.15 MISCELLANEOUS CONCRETE ITEMS

A. Filling In: Fill in holes and openings left in concrete structures for passage of work by other trades, unless otherwise shown or directed, after work of other trades is in place. Mix, place, and cure concrete as herein specified, to blend with in- place construction. Provide other miscellaneous concrete filling shown or required to complete work.

B. Reinforced Masonry: Provide concrete grout for reinforced masonry lintels and bond beams where indicated on drawings and as scheduled. Maintain accurate location of reinforcing steel during concrete placement.

3.16 CONCRETE SURFACE REPAIRS

A. Patching Defective Areas: Repair and patch defective areas with cement mortar immediately after removal of forms, when acceptable to Architect.

1. Cut out honeycomb, rock pockets, voids over 1/4 inch in any dimension, and holes left by tie rods and bolts, down to solid concrete but in no case to a depth of less than 1 inch. Make edges of cuts perpendicular to the concrete surface. Thoroughly clean, dampen with water, and brush- coat the area to be patched with specified bonding agent. Place patching mortar before bonding compound has dried.

2. For exposed-to-view surfaces, blend white portland cement and standard portland cement so that, when dry, patching mortar will match color surrounding. Provide test areas at inconspicuous location to verify mixture and color match before proceeding with patching. Compact mortar in place and strike-off slightly higher than surrounding surface.

B. Repair of Formed Surfaces: Remove and replace concrete having defective surfaces if defects cannot be repaired to satisfaction of Architect. Surface defects, as such, include color and texture irregularities, cracks, spalls, air bubbles, honeycomb, rock pockets, fins and other projections on surface, and stains and other discolorations that cannot be removed by cleaning. Flush out form tie holes, fill with dry-pack mortar, or precast cement cone plugs secured in place with bonding agent.

1. Repair concealed formed surfaces, where possible, that contain defects that affect the durability of concrete. If defects cannot be repaired, remove and replace concrete.

C. Repair of Unformed Surfaces: Test unformed surfaces, such as monolithic slabs, for smoothness and verify surface plane to tolerances specified for each surface and finish. Correct low and high areas as herein specified. Test unformed surfaces sloped to drain for trueness of slope and smoothness by using a template having required slope.

1. Repair finished unformed surfaces that contain defects that affect durability of concrete. Surface defects, as such, include crazing and cracks in excess of 0.01 inch wide or that penetrate to reinforcement or completely through nonreinforced sections regardless of width, spalling, popouts, honeycomb, rock pockets, and other objectionable conditions.

2. Correct high areas in unformed surfaces by grinding after concrete has cured at least 14 days.

3. Correct low areas in unformed surfaces during or immediately after completion of surface finishing operations by cutting out low areas and replacing with patching compound. Finish repaired areas to blend into adjacent concrete. Proprietary underlayment compounds may be used when acceptable to Architect.

4. Repair defective areas, except random cracks and single holes not exceeding 1 inch in diameter, by cutting out and replacing with fresh concrete. Remove defective areas to sound concrete with clean, square cuts and expose reinforcing steel with at least 3/4-inch clearance all around. Dampen concrete surfaces in contact with patching concrete and apply bonding compound. Mix patching concrete of same materials to provide concrete of same type or class as original concrete. Place, compact, and finish to blend with adjacent finished concrete. Cure in same manner as adjacent concrete.

D. Repair isolated random cracks and single holes not over 1 inch in diameter by dry-pack method. Groove top of cracks and cut out holes to sound concrete and clean of dust, dirt, and loose particles. Dampen cleaned concrete surfaces and apply bonding compound. Mix dry-pack, consisting of one part portland cement to 2-1/2 parts fine aggregate passing a No. 16 mesh sieve, using only enough water as required for handling and placing. Place dry-pack before bonding compound has dried. Compact dry-pack mixture in place and finish to match adjacent concrete. Keep patched area continuously moist for not less than 72 hours.

E. Perform structural repairs with prior approval of Architect for method and procedure, using specified epoxy adhesive and mortar.

F. Repair methods not specified above may be used, subject to acceptance of Architect.

3.17 QUALITY CONTROL TESTING DURING CONSTRUCTION

A. General: The Owner will employ a testing laboratory to perform tests and to submit test reports.

B. Sampling and testing for quality control during placement of concrete may include the following, as directed by Architect.

C. Sampling Fresh Concrete: ASTM C 172, except modified for slump to comply with ASTM C 94.

1. Slump: ASTM C 143; one test at point of discharge for each day's pour of each type of concrete; additional tests when concrete consistency seems to have changed.

2. Air Content: ASTM C 173, volumetric method for lightweight or normal weight concrete; ASTM C 231 pressure method for normal weight concrete; one for each day's pour of each type of air-entrained concrete.

3. Concrete Temperature: Test hourly when air temperature is 40 deg F (4 deg C) and below, when 80 deg F (27 deg C) and above, and each time a set of compression test specimens is made.

4. Compression Test Specimen: ASTM C 31; one set of 4 standard cylinders for each compressive strength test, unless otherwise directed. Mold and store cylinders for laboratory-cured test specimens except when field-cure test specimens are required.

5. Compressive Strength Tests: ASTM C 39; one set for each day's pour exceeding 5 cu. yds. plus additional sets for each 50 cu. yds. more than the first 25 cu. yds. of each concrete class placed in any one day; one specimen tested at 7 days, two specimens tested at 28 days, and one specimen retained in reserve for later testing if required.

6. When frequency of testing will provide fewer than 5 strength tests for a given class of concrete, conduct testing from at least 5 randomly selected batches or from each batch if fewer than 5 are used.

7. When total quantity of a given class of concrete is less than 50 cu. yds., Architect may waive strength test if adequate evidence of satisfactory strength is provided.

8. When strength of field-cured cylinders is less than 85 percent of companion laboratory-cured cylinders, evaluate current operations and provide corrective procedures for protecting and curing the in-place concrete.

9. Strength level of concrete will be considered satisfactory if averages of sets of three consecutive strength test results equal or exceed specified compressive strength, and no individual strength test result falls below specified compressive strength by more than 500 psi.

D. Test results will be reported in writing to Architect, Structural Engineer, Ready-Mix Producer, and Contractor within 24 hours after tests. Reports of compressive strength tests shall contain the project identification name and number, date of concrete placement, name of concrete testing service, concrete type and class, location of concrete batch in structure, design compressive strength at 28 days, concrete mix proportions and materials, compressive breaking strength, and type of break for both 7-day tests and 28-day tests.

E. Nondestructive Testing: Impact hammer, sonoscope, or other nondestructive device may be permitted but shall not be used as the sole basis for acceptance or rejection.

F. Additional Tests: The testing service will make additional tests of in-place concrete when test results indicate specified concrete strengths and other characteristics have not been attained in the structure, as directed by Architect. Testing service may conduct tests to determine adequacy of concrete by cored cylinders complying with ASTM C 42, or by other methods as directed. Contractor shall pay for such tests when unacceptable concrete is verified.

END OF SECTION 033000

SECTION 034713 - TILT-UP CONCRETE

PART 1 - GENERAL

1.1 RELATED DOCUMENTS:

A. Drawings and general provisions of the Contract, including General and Supplementary Conditions and Division-1 Specification sections, apply to work specified of this section.

B. Requirements of Section "Concrete Work" apply to work of this section.

1.2 SUMMARY:

A. Extent of tilt-up concrete construction is shown on drawings.

1.3 SUBMITTALS:

A. In addition to requirements of Section "Concrete Work," submit following:

B. Shop Drawings: Submit shop drawings indicating panel dimensions, openings, reinforcement and connection details, locations of items cast into panels, lifting devices, and other pertinent information.

C. Clearly identify additional reinforcement provided for handling units.

D. Furnish information concerning method and sequence of erection.

1.4 QUALITY ASSURANCE:

A. Following are in addition to Quality Assurance provisions of Section "Concrete Work."

B. Erector Qualifications: Have at least 2 years of successful experience in erection of tilt-up wall panels, similar to size and amount as required for this project.

C. Job Mock-Up: After acceptance of material samples, construct full- size panel to include representative items encountered in work. Cast, finish, cure, and erect job mock-up panel in same manner as will be employed in work. Job mock-up panel may be incorporated in structure when acceptable to Architect.

D. Construction Loads: Design and construct tilt-up wall panels to withstand construction loads which may occur during lifting, bracing, and impact by adjoining panels.

PART 2 - PRODUCTS

2.1 MATERIALS:

A. Tilt-up concrete construction materials are specified in Section "Concrete Work."

B. The following are in addition to requirements specified in Section "Concrete Work."

C. Bond Breaker: Polymerized solution containing no oils, waxes, paraffins, or other material which could affect bond of subsequent finishes or natural appearance of exposed concrete surfaces.

D. Anchors and Inserts: Provide inserts, dowels, bolts, nuts, washers and other items shown to be cast in panels or required for connecting panels to adjacent work, including inserts required for pick-up.

E. Structural Steel Shapes: ASTM A 36.

F. Forms: Wood, metal, or other substantial material to maintain forms in good alignment and produce required finish. Provide external bracing to prevent form displacement during casting operations.

G. Reinforcement: Comply with requirements of Section "Concrete Work."

2.2 CONCRETE MIX DESIGN:

A. Comply with requirements of Section "Concrete Work."

2.3 FABRICATION TOLERANCES:

A. Casting tolerances: Over-all height and width measured at face adjacent to mold when cast:

B. Panels 10 ft. or under, plus or minus 1/8".

C. Panels 10 ft. to 20 ft., plus 1/8" and minus 3/16".

D. Panels 20 ft. to 30 ft., plus 1/8" and minus 1/4".

E. Each additional 10 ft., plus or minus 1/16" per 10 ft.

F. Panel thickness, plus 1/4" and minus 1/8".

G. Openings (cast within one member), plus or minus 1/4".

H. Out of square (diagonal measure), 1/8" per 6 ft. or 1/4" total.

I. Location tolerances: Cast-in items:

J. Inserts, pipe sleeves, bolts, etc., plus or minus 3/8".

K. Electrical outlets, hose bibs, etc., plus or minus 1/2".

PART 3 - EXECUTION

3.1 CASTING PANELS:

A. Coordinate installation of inserts and anchorages required to be set into concrete slabs prior to casting panels.

B. Curing Base Casting Slabs: Cure concrete surfaces upon which wall panels are to be cast in same manner called for under Section "Concrete Work", except do not use paper or other curing sheet. At completion of 48 hour fog spray curing, use varnish base type of "curing compound" certified to have qualities as a "bond breaker" (parting compound), applied in accordance with manufacturer's instructions.

C. Forms: Place forms carefully to prevent damage to casting slab surfaces. Erect and brace forms to receive reinforcing steel anchors, inserts and other items to be cast into wall panels.

D. Reinforcing and Inserts: Set and tie reinforcing steel as specified in Section "Concrete Work". Locate and secure anchorages and inserts and other cast-in-place items.

E. After placing reinforcing steel for panels, check casting slab surfaces for continuity of bond breaker film. Touch-up or recoat worn or damaged areas, taking particular care to prevent application of coating on reinforcing steel and inserts.

F. Casting: Cast panels individually on building floor slab, or temporary casting platform, at Contractor's option. Comply with the applicable requirements of Section "Concrete Work."

G. Vibrate concrete thoroughly to produce maximum density throughout entire panel thickness without voids. Take care not to displace reinforcement or inserts, or to score forms, liners, or casting slab.

H. Finish: Match Architect's sample for color and texture. Cracks, voids, protrusions, spalls, or nonuniform color or texture will not be acceptable.

I. Curing: As specified in Section "Concrete Work."

3.2 ERECTION AND INSTALLATION:

A. General: Use erection equipment with care to prevent damage to floor slabs. Repair damage as directed.

B. Sequence of Erection: Coordinate panel erection sequence and adhere to special lifting sequences as may be required.

C. Erection: Do not erect panels until at least 75 percent of specified 28-day compressive strength has been verified.

D. Carefully tilt and lift panels from casting slab and erect plumb in accurate location and alignment. Anchor in place as shown. Use wedges where required to correctly position panels.

Provide concrete mortar, grout and drypack as required to fill joints between panels and foundation system.

E. After placing, provide temporary braces and supports to securely hold panels in position. Maintain braces and supports in place, undisturbed until closures, columns or other supporting structures have been installed and are capable of receiving panels.

F. Installation Tolerances: Offsets in alignment of adjacent members at any point, 1/4" maximum.

G. Weld panels to supports where indicated on drawings. Comply with requirements of AWS D1.1 for welded steel connections and D1.4 for welded reinforcing bars.

3.3 PATCHING:

A. Patch holes in panel surfaces caused by lifting and bracing devices. Comply with concrete surface repair requirements of Section "Concrete Work."

B. Repair of other defective or damaged surfaces will be permitted only on acceptance of Architect. Remove and replace panels which are not acceptable for surface repairs.

3.4 FIELD QUALITY CONTROL:

A. Comply with requirements of Section "Concrete Work."

END OF SECTION 034713

SECTION 051223 - STRUCTURAL STEEL FOR BUILDING

PART 1 - GENERAL

1.1 RELATED DOCUMENTS

A. Drawings and general provisions of Contract, including General and Supplementary Conditions and Division 01 Specification Sections, apply to this Section.

1.2 SUMMARY

A. This Section includes fabrication and erection of structural steel work, as shown on drawings including schedules, notes, and details showing size and location of members, typical connections, and types of steel required.

1. Structural steel is that work defined in American Institute of Steel Construction (AISC) "Code of Standard Practice" and as otherwise shown on drawings.

2. Miscellaneous Metal Fabrications are specified elsewhere in Division 5.

3. Refer to Division 3 for anchor bolt installation in concrete, Division 4 for anchor bolt installation in masonry.

1.3 SUBMITTALS

A. General: Submit the following in accordance with Conditions of Contract and Division 01 Specification Sections.

B. Product data or manufacturer's specifications and installation instructions for following products. Include laboratory test reports and other data to show compliance with specifications (including specified standards).

1. Structural steel (each type), including certified copies of mill reports covering chemical and physical properties.

2. High-strength bolts (each type), including nuts and washers.

3. Shrinkage-resistant grout.

C. Shop drawings prepared under supervision of a licensed Structural Engineer, including complete details and schedules for fabrication and assembly of structural steel members, procedures, and diagrams.

1. Include details of cuts, connections, camber, holes, and other pertinent data. Indicate welds by standard AWS symbols and show size, length, and type of each weld.

2. Provide setting drawings, templates, and directions for installation of anchor bolts and other anchorages to be installed as work of other sections.

1.4 QUALITY ASSURANCE

A. Codes and Standards: Comply with provisions of following, except as otherwise indicated:

1. American Institute of Steel Construction (AISC) "Code of Standard Practice for Steel Buildings and Bridges."

(1) Paragraph 4.2.1 of the above code is hereby modified by deletion of the following sentence:

(a) "This approval constitutes the owner's acceptance of all responsibility for the design adequacy of any detail configuration of connections developed by the fabricator as a part of his preparation of these shop drawings."

2. AISC "Specifications for Structural Steel Buildings," including "Commentary."

3. "Specifications for Structural Joints using ASTM A 325 or A 490 Bolts" approved by the Research Council on Structural Connections.

4. American Welding Society (AWS) D1.1 "Structural Welding Code - Steel."

5. ASTM A 6 "General Requirements for Delivery of Rolled Steel Plates, Shapes, Sheet Piling and Bars for Structural Use."

B. Qualifications for Welding Work: Qualify welding procedures and welding operators in accordance with AWS "Qualification" requirements.

1. Provide certification that welders to be employed in work have satisfactorily passed AWS qualification tests.

2. If recertification of welders is required, retesting will be Contractor's responsibility.

1.5 DELIVERY, STORAGE, AND HANDLING

A. Deliver materials to site at such intervals to ensure uninterrupted progress of work.

B. Deliver anchor bolts and anchorage devices, which are to be embedded in cast-in-place concrete or masonry, in ample time to not to delay work.

C. Store materials to permit easy access for inspection and identification. Keep steel members off ground by using pallets, platforms, or other supports. Protect steel members and packaged materials from erosion and deterioration. If bolts and nuts become dry or rusty, clean and relubricate before use.

1. Do not store materials on structure in a manner that might cause distortion or damage to members or supporting structures. Repair or replace damaged materials or structures as directed.

PART 2 - PRODUCTS

2.1 MATERIALS

A. Recycled Content of Steel Products: Postconsumer recycled content plus one-half of preconsumer recycled content not less than 25 percent.

B. Metal Surfaces, General: For fabrication of work that will be exposed to view, use only materials that are smooth and free of surface blemishes including pitting, rust and scale seam marks, roller marks, rolled trade names, and roughness. Remove such blemishes by grinding, or by welding and grinding, prior to cleaning, treating, and applying surface finishes.

C. Structural Steel Shapes, Plates, and Bars: ASTM A 36.

D. Cold Formed Steel Tubing: ASTM A 501.

E. Hot Formed Steel Tubing: ASTM A 500, Grade B.

F. Steel Pipe: ASTM A 53, Type E or S, Grade B; or ASTM A 501.

1. Finish: Black, except where indicated to be galvanized.

G. Anchor Bolts: ASTM A 307, nonheaded type unless otherwise indicated.

H. Unfinished Threaded Fasteners: ASTM A 307, Grade A, regular low- carbon steel bolts and nuts.

1. Provide hexagonal heads and nuts for all connections.

I. High-Strength Threaded Fasteners: Heavy hexagon structural bolts, heavy hexagon nuts, and hardened washers, as follows:

1. Quenched and tempered medium-carbon steel bolts, nuts, and washers, complying with ASTM A 325.

J. Electrodes for Welding: Comply with AWS Code.

K. Nonmetallic Shrinkage-Resistant Grout: Premixed, nonmetallic, noncorrosive, nonstaining product containing selected silica sands, Portland cement, shrinkage compensating agents, plasticizing and water-reducing agents, complying with CE-CRD- C621.

1. Available Products: Subject to compliance with requirements, products that may be incorporated in the work include, but are not limited to, the following:

(1) 100 Non-Shrink Grout (Non-Metallic); Conspec, Inc.
(2) Supreme Grout; Cormix, Inc.
(3) Sure Grip Grout; Dayton Superior.

(4) Euco N.S.; Euclid Chemical Co.
(5) Crystex; L & M Construction Chemicals, Inc.
(6) Masterflow 713; Master Builders.
(7) Sealtight 588 Grout; W. R. Meadows.
(8) Propak; Protex Industries, Inc.
(9) Set Non-Shrink; Set Products, Inc.
(10) Five Star Grout; U.S. Grout Corp.

2.2 FABRICATION

A. Shop Fabrication and Assembly: Fabricate and assemble structural assemblies in shop to greatest extent possible. Fabricate items of structural steel in accordance with AISC Specifications and as indicated on final shop drawings. Provide camber in structural members where indicated.

1. Properly mark and match-mark materials for field assembly. Fabricate for delivery sequence that will expedite erection and minimize field handling of materials.

2. Where finishing is required, complete assembly, including welding of units, before start of finishing operations. Provide finish surfaces of members exposed in final structure free of markings, burrs, and other defects.

B. Connections: Weld or bolt shop connections, as indicated.

C. Bolt field connections, except where welded connections or other connections are indicated.
1. Provide high-strength threaded fasteners for all bolted connections.

D. High-Strength Bolted Construction: Install high-strength threaded fasteners in accordance with AISC "Specifications for Structural Joints using ASTM A 325 or A 490 Bolts."

E. Welded Construction: Comply with AWS Code for procedures, appearance and quality of welds, and methods used in correcting welding work.

F. Holes for Other Work: Provide holes required for securing other work to structural steel framing and for passage of other work through steel framing members, as shown on final shop drawings.

G. Provide threaded nuts welded to framing and other specialty items as indicated to receive other work.

H. Cut, drill, or punch holes perpendicular to metal surfaces. Do not flame-cut holes or enlarge holes by burning. Drill holes in bearing plates.

I. Painting: Provide a one-coat, shop-applied paint system complying with Steel Structures Painting Council (SSPC) Paint System Guide No. 7.00.

2.3 SOURCE QUALITY CONTROL

A. General: Materials and fabrication procedures are subject to inspection and tests in mill, shop, and field, conducted by a qualified inspection agency. Such inspections and tests will not relieve Contractor of responsibility for providing materials and fabrication procedures in compliance with specified requirements.

1. Promptly remove and replace materials or fabricated components that do not comply.

B. Design of Members and Connections: Details shown are typical; similar details apply to similar conditions, unless otherwise indicated. Verify dimensions at site whenever possible without causing delay in the work.

1. Promptly notify Architect whenever design of members and connections for any portion of structure are not clearly indicated.

PART 3 - EXECUTION

3.1 ERECTION

A. Temporary Shoring and Bracing: Provide temporary shoring and bracing members with connections of sufficient strength to bear imposed loads. Remove temporary members and connections when permanent members are in place and final connections are made. Provide temporary guy lines to achieve proper alignment of structures as erection proceeds.

B. Temporary Planking: Provide temporary planking and working platforms as necessary to effectively complete work.

C. Setting Bearing Plates: Clean concrete and masonry bearing surfaces of bond-reducing materials and roughen to improve bond to surfaces. Clean bottom surface of bearing plates.

1. Set loose and attached base plates and bearing plates for structural members on wedges or other adjusting devices.

2. Tighten anchor bolts after supported members have been positioned and plumbed. Do not remove wedges or shims, but if protruding, cut off flush with edge of base or bearing plate prior to packing with grout.

3. Pack grout solidly between bearing surfaces and bases or plates to ensure that no voids remain. Finish exposed surfaces, protect installed materials, and allow to cure.

4. For proprietary grout materials, comply with manufacturer's instructions.

D. Field Assembly: Set structural frames accurately to lines and elevations indicated. Align and adjust various members forming part of complete frame or structure before permanently fastening. Clean bearing surfaces and other surfaces that will be in permanent contact before assembly. Perform necessary adjustments to compensate for discrepancies in elevations and alignment.

E. Level and plumb individual members of structure within specified AISC tolerances.

F. Splice members only where indicated and accepted on shop drawings.

G. Erection Bolts: On exposed welded construction, remove erection bolts, fill holes with plug welds, and grind smooth at exposed surfaces.

1. Comply with AISC Specifications for bearing, adequacy of temporary connections, alignment, and removal of paint on surfaces adjacent to field welds.

2. Do not enlarge unfair holes in members by burning or by using drift pins, except in secondary bracing members. Ream holes that must be enlarged to admit bolts.

H. Gas Cutting: Do not use gas cutting torches in field for correcting fabrication errors in primary structural framing. Cutting will be permitted only on secondary members that are not under stress, as acceptable to Architect. Finish gas-cut sections equal to a sheared appearance when permitted.

3.2 QUALITY CONTROL

A. Owner will engage an independent testing and inspection agency to inspect high-strength bolted connections and welded connections and to perform tests and prepare test reports.

B. Testing agency shall conduct and interpret tests, state in each report whether test specimens comply with requirements, and specifically state any deviations therefrom.

C. Provide access for testing agency to places where structural steel work is being fabricated or produced so that required inspection and testing can be accomplished.

D. Testing agency may inspect structural steel at plant before shipment.

E. Correct deficiencies in structural steel work that inspections and laboratory test reports have indicated to be not in compliance with requirements. Perform additional tests, at Contractor's expense, as necessary to reconfirm any noncompliance of original work and to show compliance of corrected work.

END OF SECTION 051223

SECTION 052100 - STEEL JOIST FRAMING

PART 1 - GENERAL

1.1 RELATED DOCUMENTS

A. Drawings and general provisions of Contract, including General and Supplementary Conditions and Division 01 Specification Sections, apply to this Section.

1.2 SUMMARY

A. This Section includes steel joists for roof framing. Types of joists required include the following:

1. K-Series Open Web Steel Joists.

1.3 SUBMITTALS

A. General: Submit the following in accordance with Conditions of Contract and Division 01 Specification Sections.

B. Product data and installation instructions for each type of joist and accessories.

1. Include manufacturer's certification that joists comply with SJI "Specifications."

C. Shop drawings showing layout of joist members, special connections, joining and accessories. Include mark, number, type, location and spacing of joists and bridging.

1.4 QUALITY ASSURANCE

A. General: Provide joists fabricated in compliance with Steel Joist Institute (SJI) "Standard Specifications, Load Tables and Weight Tables for Steel Joists and Joist Girders."

B. Qualification of Field Welding: Qualify welding processes and welding operators in accordance with American Welding Society (AWS) "Structural Welding Code - Steel," AWS D1.1.

C. Inspection: Inspect joists in accordance with SJI "Specifications."

1.5 DELIVERY, STORAGE AND HANDLING

A. Deliver, store and handle steel joists as recommended in SJI "Specifications." Handle and store joists in a manner to avoid deforming members and to avoid excessive stresses.

PART 2 - PRODUCTS

2.1 MATERIALS

A. Steel: Comply with SJI "Specifications" for chord and web sections.

B. Steel Bearing Plates: ASTM A 36.

C. Unfinished Threaded Fasteners: ASTM A 307, Grade A, regular hexagon type, low carbon steel.

D. Steel Prime Paint: Manufacturer's standard.

2.2 FABRICATION

A. General: Fabricate steel joists in accordance with SJI "Specification."

B. Holes in Chord Members: Provide holes in chord members where shown for securing other work to steel joists; however, deduct area of holes from the area of chord when calculating strength of member.

C. Extended End: Provide extended ends on joists where indicated, complying with SJI "Specifications" and load tables.

D. Bridging: Provide horizontal or diagonal type bridging for joists, complying with SJI "Specifications."

1. Provide bridging anchors for ends of bridging lines terminating at walls or beams.

E. Supply ceiling extensions, either extended bottom chord elements or a separate extension unit of sufficient strength to support ceiling construction. Extend ends to within 1/2" of finished wall surface, unless otherwise indicated.

F. End Anchorage: Provide end anchorages, including steel bearing plates, to secure joists to adjacent construction, complying with SJI "Specifications."

G. Shop Painting: Remove loose scale, heavy rust, and other foreign materials from fabricated joists and accessories before application of shop paint.

1. Apply one shop coat of steel prime paint to joists and accessories, by spraying, dipping, or other method to provide a continuous dry paint film thickness of not less than 0.50 mil.

PART 3 - EXECUTION

3.1 ERECTION

A. Place and secure steel joists in accordance with SJI "Specifications," final shop drawings, and as herein specified.

B. Anchors: Furnish steel bearing plates and other devices to be built into concrete and masonry construction.

C. Placing Joists: Do not start placement of steel joists until supporting work is in place and secured. Place joists on supporting work, adjust and align in accurate locations and spacing before permanently fastening.

D. Provide temporary bridging, connections, and anchors to ensure lateral stability during construction.

E. Where "open-web" joist lengths are 40 feet and longer, install a center row of bolted bridging to provide lateral stability before slackening of hoisting lines.

F. Bridging: Install bridging simultaneously with joist erection, before construction loads are applied. Anchor ends of bridging lines at top and bottom chords where terminating at walls or beams.

G. Fastening Joists: Comply with the following:

1. Field weld joists to supporting steel framework and steel bearing plates where indicated in accordance with SJI "Specifications" for type of joists used. Coordinate welding sequence and procedure with placing of joists.

H. Touch-Up Painting: After joist installation, wire brush welded areas, abraded or rusty surfaces, and clean with solvent. Paint field-applied bolt heads and nuts and prepared surfaces on joists and steel supporting members. Use same type of paint as used for shop painting.

END OF SECTION 052100

SECTION 053100 - STEEL DECKING

PART 1 - GENERAL

1.1 RELATED DOCUMENTS

A. Drawings and general provisions of Contract, including General and Supplementary Conditions and Division 01 Specification Sections, apply to this section.

1.2 SUMMARY

A. This Section includes the following:

1. Acccoustical steel roof deck

B. Related Sections include the following:

1. Division 07 Section “Thermal Insulation” for sound absorbing insulation.

1.3 SUBMITTALS

A. Product data including manufacturer's specifications and installation instructions for decking and accessories.

B. Shop drawings showing layout of deck units, anchorage details, cut openings, special jointing, and other accessories.

1.4 QUALITY ASSURANCE

A. Codes and Standards: Comply with provisions of the following codes and standards, except as otherwise indicated:

1. American Iron and Steel Institute (AISI), "Specification for the Design of Cold-Formed Steel Structural Members."

2. American Welding Society (AWS), D1.3 "Structural Welding Code - Sheet Steel."

3. Steel Deck Institute (SDI), "Design Manual for Composite Decks, Form Decks and Roof Decks."

B. Qualification of Field Welding: Use qualified welding processes and welding operators in accordance with "Welder Qualification" procedures of AWS.

C. Welded decking in place is subject to inspection and testing. Owner will bear expense of removing and replacing portions of decking for testing purposes if welds are found to be satisfactory. Remove work found to be defective and replace with new acceptable work.

1.5 PRODUCT DELIVERY, STORAGE AND HANDLING

A. Steel Deck

1. Do not bend or mar decking.

2. Store off ground with one end elevated for drainage

3. Cover with waterproof material, ventilated to avoid condensation

B. Thermal Insulation

1. Store in enclosed area protected from weather.

1.6 COORDINATION

A. Coordinate installation of sound absorbing insulation strips in topside ribs of acoustical deck with roofing installation specified in Division 07 “Thermal Insulation” to ensure protection of insulation strips against damage from effects of weather and other causes.

PART 2 - PRODUCTS

2.1 MANUFACTURERS

A. Available Manufacturers: Subject to compliance with requirements, manufacturers offering products that may be incorporated in the work include but are not limited to the following:

1. Bowman Metal Deck Div., Cyclops Corp.
2. Consolidated Systems, Inc.
3. Epic Metals Corp.
4. Marlyn Steel Products, Inc.
5. H. H. Robertson Co.
6. Roll Form Products, Inc.
7. Roof Deck, Inc.
8. United Steel Deck, Inc.
9. Vulcraft Div., Nucor Corp.
10. Wheeling Corrugating Co.

2.2 MATERIALS

A. Recycled Content of Steel Products: Postconsumer recycled content plus one-half of preconsumer recycled content not less than 25 percent.

B. Steel for Painted Metal Deck Units: ASTM A 611, grade as required to comply with SDI specifications.

C. Miscellaneous Steel Shapes: ASTM A 36.

D. Sheet Metal Accessories: ASTM A 526, commercial quality, galvanized.
E. Galvanizing: ASTM A 525, G60.

F. Paint: Manufacturer's baked-on, rust-inhibitive paint, for application to metal surfaces that have been chemically cleaned and phosphate chemical treated.

2.3 FABRICATION

A. General: Form deck units in lengths to span three or more supports, with flush, telescoped, or nested 2-inch laps at ends and interlocking or nested side laps, of metal thickness, depth, and width as indicated.

B. Roof Deck Units: Provide deck configurations that comply with SDI "Specifications and Commentary for Steel Roof Deck", of metal thickness, depth and section properties as shown.

C. Ridge and Valley Plates: Fabricate from single piece of 0.036 inch minimum (20 gage) galvanized sheet steel. Minimum width of plate shall be 12 inches.

PART 3 - EXECUTION

3.1 INSTALLATION

A. General: Install deck units and accessories in accordance with manufacturer's recommendations, shop drawings, and as specified herein.

B. Place deck units on supporting steel framework and adjust to final position with ends accurately aligned and bearing on supporting members before being permanently fastened. Do not stretch or contract side lap interlocks.

C. Place deck units flat and square, secured to adjacent framing without warp or deflection.

D. Coordinate and cooperate with structural steel erector in locating decking bundles to prevent overloading of structural members.

E. Do not use floor deck units for storage or working platforms until permanently secured.

F. Fastening Deck Units:

1. Fasten roof deck units to steel supporting members as noted and detailed on the drawings.

2. Comply with AWS requirements and procedures for manual shielded metal arc welding, appearance and quality of welds, and methods used in correcting welding work.

(1) Use welding washers where recommended by deck manufacturer.

3. Mechanically fasten side laps of adjacent deck units between supports, at center of deck span, using self-tapping No. 8 or larger machine screws.

G. Cutting and Fitting: Cut and neatly fit deck units and accessories around other work projecting through or adjacent to the decking, as shown.

H. Reinforcement at Openings: Provide additional metal reinforcement and closure pieces as

required for strength, continuity of decking, and support of other work shown.

I. Touch-Up Painting: After decking installation, wire brush, clean, and paint scarred areas, welds, and rust spots on top and bottom surfaces of decking units and supporting steel members.

1. Touch-up painted surfaces with same type of shop paint used on adjacent surfaces.

2. In areas where shop-painted surfaces are to be exposed, apply touch-up paint to blend into adjacent surfaces.

J. Sound-Absorbing Insulation: Installation into topside ribs of deck as specified in Division 07 Section “Thermal Insulation”.

END OF SECTION 053100

SECTION 054100-STRUCTURAL METAL STUD FRAMING

PART 1 - GENERAL

1.1 RELATED DOCUMENTS

A. Drawings and general provisions of Contract, including General and Supplementary Conditions and Division 01 Specification Sections, apply to this section.

1.2 SUMMARY

A. Types of cold-formed metal framing units include the following:

1. C-shaped steel studs.

1.3 SUBMITTALS

A. General: Submit the following in accordance with Conditions of Contract and Division 01 Specification Sections.

B. Product data and installation instructions for each item of cold- formed metal framing and accessories.

C. Shop drawings for special components and installations not fully dimensioned or detailed in manufacturer's product data.

1. Include placing drawings for framing members showing size and gage designations, number, type, location, and spacing. Indicate supplemental strapping, bracing, splices, bridging, accessories, and details required for proper installation.

1.4 QUALITY ASSURANCE

A. Component Design: Calculate structural properties of studs in accordance with American Iron and Steel Institute (AISI) "Specification for Design of Cold-Formed Steel Structural Members."

B. Welding: Use qualified welders and comply with American Welding Society (AWS) D1.3, "Structural Welding Code - Sheet Steel."

PART 2 - PRODUCTS

2.1 MANUFACTURERS

A. Available Manufacturers: Subject to compliance with requirements, manufacturers offering products that may be incorporated in the work include but are not limited to the following:

1. Alabama Metal Industries Corp.
2. Dale Industries, Inc.
3. Dietrich Industries, Inc.
4. Marino Industries, Inc.
5. Superior Steel Studs, Inc.

6. USG Industries
7. United States Steel
8. Wheeling Corrugating Co.

2.2 MATERIALS

A. Recycled Content of Steel Products: Postconsumer recycled content plus one-half of preconsumer recycled content not less than 25 percent.

2.3 METAL FRAMING

A. System Components: Manufacturers' standard galvanized steel studs of type, size, shape, and gage as indicated. With each type of metal framing required, provide manufacturer's standard steel runners (tracks), blocking, lintels, clip angles, shoes, reinforcements, fasteners, and accessories for applications indicated, as needed to provide a complete metal framing system.

B. Materials and Finishes:

1. For 18-gage and lighter units, fabricate metal framing components of commercial quality steel sheet with a minimum yield point of 33,000 psi; ASTM A 446, A 570, or A 611.

2. Provide galvanized finish to metal framing components complying with ASTM A 525 for minimum G 60 coating.

(1) Finish of installation accessories to match that of main framing components, unless otherwise indicated.

3. Fasteners: Provide nuts, bolts, washers, screws, and other fasteners with corrosion-resistant plated finish.

4. Electrodes for Welding: Comply with AWS Code and as recommended by stud manufacturer.

C. Galvanizing Repair: Where galvanized surfaces are damaged, prepare surfaces and repair in accordance with procedures specified in ASTM A 780.

2.4 FABRICATION

A. General: Framing components may be prefabricated into assemblies before erection. Fabricate panels plumb, square, true to line, and braced against racking with joints welded. Perform lifting of prefabricated units to prevent damage or distortion.

B. Fabricate units in jig templates to hold members in proper alignment and position and to assure consistent component placement.

C. Fastenings: Attach similar components by welding. Attach dissimilar components by welding, bolting, or screw fasteners, as standard with manufacturer.

1. Wire tying of framing components is not permitted.

D. Fabrication Tolerances: Fabricate units to a maximum allowable tolerance variation from plumb, level, and true to line of 1/8 inch in 10 feet.

PART 3 - EXECUTION

3.1 INSTALLATION

A. General: Install metal framing systems in accordance with manufacturer's printed or written instructions and recommendations.

B. Runner Tracks: Install continuous tracks sized to match studs. Align tracks accurately to layout at base and tops of studs. Unless noted otherwise, secure tracks as recommended by stud manufacturer for type of construction involved, except do not exceed 24 inches o.c. spacing for nail or power-driven fasteners or 16 inches o.c. for other types of attachment. Provide fasteners at corners and ends of tracks.

C. Installation of Wall Studs: Secure studs to top and bottom runner tracks by either welding or screw fastening at both inside and outside flanges.

D. Set studs plumb, except as needed for diagonal bracing or required for nonplumb walls or warped surfaces and similar requirements.

E. Install supplementary framing, blocking, and bracing in metal framing system wherever walls or partitions are indicated to support fixtures, equipment, services, casework, heavy trim and furnishings, and similar work requiring attachment to the wall or partition. Where type of supplementary support is not otherwise indicated, comply with stud manufacturer's recommendations and industry standards in each case, considering weight or loading resulting from item supported.

F. Frame wall openings larger than 2 feet square with double stud at each jamb of frame except where more than two are either shown or indicated in manufacturer's instructions. Install runner tracks and jack studs above and below wall openings. Anchor tracks to jamb studs with stud shoes or by welding, and space jack studs same as full-height studs of wall. Secure stud system wall opening frame in manner indicated.

G. Install horizontal stiffeners in stud system, spaced (vertical distance) at not more than 54 inches o.c, unless otherwise noted. Weld at each intersection.

H. Erection Tolerances: Bolt or weld panels (at both horizontal and vertical junctures) to produce flush, even, true- to-line joints.

1. Maximum variation in plane and true position between prefabricated assemblies should not exceed 1/16 inch.

I. Field Painting: Touch-up damaged shop-applied protective coatings. Use galvanizing repair system for galvanized surfaces.

END OF SECTION 054100

SECTION 055000 - METAL FABRICATIONS

PART 1 - GENERAL

1.1 RELATED DOCUMENTS

A. Drawings and general provisions of the Contract, including General and Supplementary Conditions and Division 01 Specification Sections, apply to this Section.

1.2 SUMMARY

A. This Section includes the following:
1. Steel framing and supports for overhead doors.
2. Steel framing and supports for mechanical and electrical equipment.
3. Steel framing and supports for applications where framing and supports are not specified in other Sections.
4. Loose bearing and leveling plates.
5. Steel weld plates and angles for casting into concrete not specified in other Sections.
6. Metal ladders (roof scuttle and parapet types).
7. Metal bollards.
8. Metal floor plate and supports.
9. Abrasive metal stair nosings

B. Products furnished, but not installed, under this Section include the following:

1. Loose steel lintels.
2. Anchor bolts, steel pipe sleeves, and wedge-type inserts indicated to be cast into concrete or built into unit masonry.

C. Related Sections include the following:

1. Division 03 Section "Cast-in-Place Concrete" for installing anchor bolts, steel pipe sleeves, wedge-type inserts and other items indicated to be cast into concrete.
2. Division 05 Section "Structural Steel Framing."
3. Division 05 Section "Metal Stairs."
4. Division 05 Section "Pipe and Tube Railings."

1.3 PERFORMANCE REQUIREMENTS

A. Structural Performance of Ladders: Provide ladders capable of withstanding the effects of loads and stresses within limits and under conditions specified in ANSI A14.3.

B. Thermal Movements: Provide exterior metal fabrications that allow for thermal movements resulting from the following maximum change (range) in ambient and surface temperatures by preventing buckling, opening of joints, overstressing of components, failure of connections, and other detrimental effects. Base engineering calculation on surface temperatures of materials due to both solar heat gain and nighttime-sky heat loss.

1. Temperature Change (Range): 120 deg F (67 deg C), ambient; 180 deg F (100 deg C), material surfaces.

1.4 SUBMITTALS

A. Product Data: For the following:
1. Paint products.
2. Grout.

B. Shop Drawings: Show fabrication and installation details for metal fabrications.

1. Include plans, elevations, sections, and details of metal fabrications and their connections. Show anchorage and accessory items.
2. Provide templates for anchors and bolts specified for installation under other Sections.

C. Samples for Verification: For each type and finish of extruded nosing.

D. Welding certificates.

1.5 QUALITY ASSURANCE

A. Welding: Qualify procedures and personnel according to the following:

1. AWS D1.1, "Structural Welding Code--Steel."

1.6 PROJECT CONDITIONS

A. Field Measurements: Verify actual locations of walls and other construction contiguous with metal fabrications by field measurements before fabrication and indicate measurements on Shop Drawings.

1. Established Dimensions: Where field measurements cannot be made without delaying the Work, establish dimensions and proceed with fabricating metal fabrications without field measurements. Coordinate wall and other contiguous construction to ensure that actual dimensions correspond to established dimensions.
2. Provide allowance for trimming and fitting at site.

1.7 COORDINATION

A. Coordinate installation of anchorages for metal fabrications. Furnish setting drawings, templates, and directions for installing anchorages, including sleeves, concrete inserts, anchor bolts, and items with integral anchors, that are to be embedded in concrete or masonry. Deliver such items to Project site in time for installation.

B. Coordinate installation of steel weld plates and angles for casting into concrete that are specified in this Section but required for work of another Section. Deliver such items to Project site in time for installation.

PART 2 - PRODUCTS

2.1 MANUFACTURERS

A. In other Part 2 articles where titles below introduce lists, the following requirements apply to product selection:

1. Available Products: Subject to compliance with requirements, products that may be incorporated into the Work include, but are not limited to, products specified.
2. Available Manufacturers: Subject to compliance with requirements, manufacturers offering products that may be incorporated into the Work include, but are not limited to, manufacturers specified.

2.2 METALS, GENERAL

A. Metal Surfaces, General: Provide materials with smooth, flat surfaces, unless otherwise indicated. For metal fabrications exposed to view in the completed Work, provide materials without seam marks, roller marks, rolled trade names, or blemishes.

2.3 FERROUS METALS

A. Steel Plates, Shapes, and Bars: ASTM A 36/A 36M.

B. Steel Tubing: ASTM A 500, cold-formed steel tubing.

C. Steel Pipe: ASTM A 53/A 53M, standard weight (Schedule 40), unless another weight is indicated or required by structural loads.

D. Slotted Channel Framing: Cold-formed metal channels with continuous slot complying with MFMA-3.

1. Size of Channels: 1-5/8 by 1-5/8 inches (41 by 41 mm).
2. Material: Steel complying with ASTM A 1008/A 1008M, commercial steel, Type B; 0.0677-inch (1.7-mm) minimum thickness; coated with rust-inhibitive, baked-on, acrylic enamel.

E. Cast Iron: ASTM A 48/A 48M, Class 30, unless another class is indicated or required by structural loads.

2.4 NONFERROUS METALS

A. Aluminum Extrusions: ASTM B 221 (ASTM B 221M), Alloy 6063-T6.

2.5 FASTENERS

A. General: Unless otherwise indicated, provide Type 304 stainless-steel fasteners for exterior use and zinc-plated fasteners with coating complying with ASTM B 633, Class Fe/Zn 5, at exterior

walls. Provide stainless-steel fasteners for fastening aluminum. Select fasteners for type, grade, and class required.

B. Steel Bolts and Nuts: Regular hexagon-head bolts, ASTM A 307, Grade A (ASTM F 568M, Property Class 4.6); with hex nuts, ASTM A 563 (ASTM A 563M); and, where indicated, flat washers.

C. Stainless-Steel Bolts and Nuts: Regular hexagon-head annealed stainless-steel bolts, nuts and, where indicated, flat washers; ASTM F 593 (ASTM F 738M) for bolts and ASTM F 594 (ASTM F 836M) for nuts, Alloy Group 2 (A4).

D. Anchor Bolts: ASTM F 1554, Grade 36.

1. Provide hot-dip or mechanically deposited, zinc-coated anchor bolts where item being fastened is indicated to be galvanized.

E. Eyebolts: ASTM A 489.

F. Machine Screws: ASME B18.6.3 (ASME B18.6.7M).

G. Lag Bolts: ASME B18.2.1 (ASME B18.2.3.8M).

H. Wood Screws: Flat head, ASME B18.6.1.

I. Plain Washers: Round, ASME B18.22.1 (ASME B18.22M).

J. Lock Washers: Helical, spring type, ASME B18.21.1 (ASME B18.21.2M).

K. Cast-in-Place Anchors in Concrete: Anchors capable of sustaining, without failure, a load equal to four times the load imposed, as determined by testing according to ASTM E 488, conducted by a qualified independent testing agency.

1. Threaded or wedge type; galvanized ferrous castings, either ASTM A 47/A 47M malleable iron or ASTM A 27/A 27M cast steel. Provide bolts, washers, and shims as needed, hot-dip galvanized per ASTM A 153/A 153M.

L. Expansion Anchors: Anchor bolt and sleeve assembly with capability to sustain, without failure, a load equal to six times the load imposed when installed in unit masonry and four times the load imposed when installed in concrete, as determined by testing according to ASTM E 488, conducted by a qualified independent testing agency.

1. Material for Anchors in Interior Locations: Carbon-steel components zinc-plated to comply with ASTM B 633, Class Fe/Zn 5.
2. Material for Anchors in Exterior Locations: Alloy Group 2 (A4) stainless-steel bolts complying with ASTM F 593 (ASTM F 738M) and nuts complying with ASTM F 594 (ASTM F 836M).

2.6 MISCELLANEOUS MATERIALS

A. Welding Rods and Bare Electrodes: Select according to AWS specifications for metal alloy welded.

B. Shop Primers: Provide primers that comply with Division 09 painting Sections.

C. Universal Shop Primer: Fast-curing, lead- and chromate-free, universal modified-alkyd primer complying with MPI#79.

1. Use primer with a VOC content of 420 g/L (3.5 lb/gal.) or less when calculated according to 40 CFR 59, Subpart D (EPA Method 24).
2. Use primer containing pigments that make it easily distinguishable from zinc-rich primer.

D. Zinc-Rich Primer: Complying with SSPC-Paint 20 or SSPC-Paint 29 and compatible with topcoat.

1. Use primer with a VOC content of 420 g/L (3.5 lb/gal.) or less when calculated according to 40 CFR 59, Subpart D (EPA Method 24).
2. Available Products:

a. Benjamin Moore & Co.; Epoxy Zinc-Rich Primer CM18/19.
b. Carboline Company; Carbozinc 621.
c. ICI Devoe Coatings; Catha-Coat 313.
d. International Coatings Limited; Interzinc 315 Epoxy Zinc-Rich Primer.
e. PPG Architectural Finishes, Inc.; Aquapon Zinc-Rich Primer 97-670.
f. Sherwin-Williams Company (The); Corothane I GalvaPac Zinc Primer.
g. Tnemec Company, Inc.; Tneme-Zinc 90-97.

E. Galvanizing Repair Paint: High-zinc-dust-content paint for regalvanizing welds in steel, complying with SSPC-Paint 20.

F. Bituminous Paint: Cold-applied asphalt emulsion complying with ASTM D 1187.

G. Nonshrink, Nonmetallic Grout: Factory-packaged, nonstaining, noncorrosive, nongaseous grout complying with ASTM C 1107. Provide grout specifically recommended by manufacturer for interior and exterior applications.

H. Concrete Materials and Properties: Comply with requirements in Division 03 Section "Cast-in-Place Concrete" for normal-weight, air-entrained, ready-mix concrete with a minimum 28-day compressive strength of 3000 psi (20 MPa), unless otherwise indicated.

2.7 FABRICATION, GENERAL

A. Shop Assembly: Preassemble items in the shop to greatest extent possible. Disassemble units only as necessary for shipping and handling limitations. Use connections that maintain structural value of joined pieces. Clearly mark units for reassembly and coordinated installation.

B. Cut, drill, and punch metals cleanly and accurately. Remove burrs and ease edges to a radius of approximately 1/32 inch (1 mm), unless otherwise indicated. Remove sharp or rough areas on exposed surfaces.

C. Form bent-metal corners to smallest radius possible without causing grain separation or otherwise impairing work.

D. Form exposed work true to line and level with accurate angles and surfaces and straight edges.

E. Weld corners and seams continuously to comply with the following:

1. Use materials and methods that minimize distortion and develop strength and corrosion resistance of base metals.
2. Obtain fusion without undercut or overlap.
3. Remove welding flux immediately.
4. At exposed connections, finish exposed welds and surfaces smooth and blended so no roughness shows after finishing and contour of welded surface matches that of adjacent surface.

F. Form exposed connections with hairline joints, flush and smooth, using concealed fasteners where possible. Where exposed fasteners are required, use Phillips flat-head (countersunk) screws or bolts, unless otherwise indicated. Locate joints where least conspicuous.

G. Fabricate seams and other connections that will be exposed to weather in a manner to exclude water. Provide weep holes where water may accumulate.

H. Cut, reinforce, drill, and tap metal fabrications as indicated to receive finish hardware, screws, and similar items.

I. Provide for anchorage of type indicated; coordinate with supporting structure. Space anchoring devices to secure metal fabrications rigidly in place and to support indicated loads.

1. Where units are indicated to be cast into concrete or built into masonry, equip with integrally welded steel strap anchors, 1/8 by 1-1/2 inches (3.2 by 38 mm), with a minimum 6-inch (150-mm) embedment and 2-inch (50-mm) hook, not less than 8 inches (200 mm) from ends and corners of units and 24 inches (600 mm) o.c., unless otherwise indicated.

2.8 MISCELLANEOUS FRAMING AND SUPPORTS

A. General: Provide steel framing and supports not specified in other Sections as needed to complete the Work.

B. Fabricate units from steel shapes, plates, and bars of welded construction, unless otherwise indicated. Fabricate to sizes, shapes, and profiles indicated and as necessary to receive adjacent construction retained by framing and supports. Cut, drill, and tap units to receive hardware, hangers, and similar items.

1. Furnish inserts if units are installed after concrete is placed.

C. Prime exterior miscellaneous framing and supports with zinc-rich primer where required or indicated.

2.9 LOOSE STEEL LINTELS

A. Fabricate loose steel lintels from steel angles and shapes of size indicated for openings and recesses in masonry walls and partitions at locations indicated. Weld adjoining members together to form a single unit where indicated.

B. Size loose lintels to provide bearing length at each side of openings equal to 1/12 of clear span but not less than 8 inches (200 mm), unless otherwise indicated.

C. Prime loose steel lintels located in exterior walls with zinc-rich primer.

2.10 LOOSE BEARING AND LEVELING PLATES

A. Provide loose bearing and leveling plates for steel items bearing on masonry or concrete construction. Drill plates to receive anchor bolts and for grouting.

B. Prime plates with zinc-rich primer.

2.11 STEEL WELD PLATES AND ANGLES

A. Provide steel weld plates and angles not specified in other Sections, for items supported from concrete construction as needed to complete the Work. Provide each unit with not less than two integrally welded steel strap anchors for embedding in concrete.

2.12 METAL LADDERS

A. General:

1. Comply with ANSI A14.3, unless otherwise indicated.
2. Space side rails 18 inches (457 mm) apart, unless otherwise indicated.
3. Support each ladder with welded or bolted brackets, made from same metal as ladder.

B. Steel Ladders:

1. Side rails: Continuous, 3/8-by-2-1/2-inch (9.5-by-64-mm) steel flat bars, with eased edges.
2. Rungs: 3/4-inch- (19-mm-) diameter steel bars.
3. Fit rungs in centerline of side rails; plug-weld and grind smooth on outer rail faces.
4. Provide nonslip surfaces on top of each rung, either by coating rung with aluminum-oxide granules set in epoxy-resin adhesive or by using a type of manufactured rung filled with aluminum-oxide grout.
5. Galvanize exterior ladders, including brackets and fasteners.
6. Prime interior ladders, where indicated, including brackets and fasteners, with universal shop primer.

2.13 METAL BOLLARDS

A. Fabricate metal bollards from Schedule 40 steel pipe.

B. Fabricate sleeves for bollard anchorage from steel pipe with 1/4-inch- (6.4-mm-) thick steel plate welded to bottom of sleeve. Make sleeves not less than 8 inches (200 mm) deep and 3/4 inch (19 mm) larger than OD of bollard.

C. Prime coat bollards with zinc-rich primer.

2.14 METAL FLOOR PLATE

A. Fabricate from galvanized checkered rolled-steel floor plate of thickness indicated below:

1. Thickness: 1/4 inch (6.4 mm) or as indicated.

B. Provide steel angle supports as indicated.

2.15 FINISHES, GENERAL

A. Comply with NAAMM's "Metal Finishes Manual for Architectural and Metal Products" for recommendations for applying and designating finishes.

B. Finish metal fabrications after assembly.

2.16 STEEL AND IRON FINISHES

A. Galvanizing: Hot-dip galvanize items as indicated to comply with applicable standard listed below:

1. ASTM A 123/A 123M, for galvanizing steel and iron products.
2. ASTM A 153/A 153M, for galvanizing steel and iron hardware.

B. Preparation for Shop Priming: Prepare uncoated ferrous-metal surfaces to comply with minimum requirements indicated below for SSPC surface preparation specifications and environmental exposure conditions of installed metal fabrications:

1. Exteriors (SSPC Zone 1B) and Items Indicated to Receive Zinc-Rich Primer: SSPC-SP 6/NACE No. 3, "Commercial Blast Cleaning."
2. Interiors (SSPC Zone 1A): SSPC-SP 3, "Power Tool Cleaning."

C. Shop Priming: Apply shop primer to uncoated surfaces of metal fabrications, except those with galvanized finishes and those to be embedded in concrete, sprayed-on fireproofing, or masonry, unless otherwise indicated. Comply with SSPC-PA 1, "Paint Application Specification No. 1: Shop, Field, and Maintenance Painting of Steel," for shop painting.

1. Stripe paint corners, crevices, bolts, welds, and sharp edges.

2.17 ALUMINUM FINISHES

A. Finish designations prefixed by AA comply with the system established by the Aluminum Association for designating aluminum finishes.

B. As-Fabricated Finish: AA-M10 (Mechanical Finish: as fabricated, unspecified).

PART 3 - EXECUTION

3.1 INSTALLATION, GENERAL

A. Cutting, Fitting, and Placement: Perform cutting, drilling, and fitting required for installing metal fabrications. Set metal fabrications accurately in location, alignment, and elevation; with edges and surfaces level, plumb, true, and free of rack; and measured from established lines and levels.

B. Fit exposed connections accurately together to form hairline joints. Weld connections that are not to be left as exposed joints but cannot be shop welded because of shipping size limitations. Do not weld, cut, or abrade surfaces of exterior units that have been hot-dip galvanized after fabrication and are for bolted or screwed field connections.

C. Field Welding: Comply with the following requirements:

1. Use materials and methods that minimize distortion and develop strength and corrosion resistance of base metals.
2. Obtain fusion without undercut or overlap.
3. Remove welding flux immediately.
4. At exposed connections, finish exposed welds and surfaces smooth and blended so no roughness shows after finishing and contour of welded surface matches that of adjacent surface.

D. Fastening to In-Place Construction: Provide anchorage devices and fasteners where metal fabrications are required to be fastened to in-place construction. Provide threaded fasteners for use with concrete and masonry inserts, toggle bolts, through bolts, lag bolts, wood screws, and other connectors.

E. Provide temporary bracing or anchors in formwork for items that are to be built into concrete, masonry, or similar construction.

F. Corrosion Protection: Coat concealed surfaces of aluminum that will come into contact with grout, concrete, masonry, wood, or dissimilar metals with a heavy coat of bituminous paint.

3.2 INSTALLING MISCELLANEOUS FRAMING AND SUPPORTS

A. General: Install framing and supports to comply with requirements of items being supported, including manufacturers' written instructions and requirements indicated on Shop Drawings.

B. Anchor supports for operable partitions securely to and rigidly brace from building structure.

C. Install pipe columns on concrete footings with grouted baseplates. Position and grout column baseplates as specified in "Installing Bearing and Leveling Plates" Article.

3.3 INSTALLING BEARING AND LEVELING PLATES

A. Clean concrete and masonry bearing surfaces of bond-reducing materials, and roughen to improve bond to surfaces. Clean bottom surface of plates.

B. Set bearing and leveling plates on wedges, shims, or leveling nuts. After bearing members have been positioned and plumbed, tighten anchor bolts. Do not remove wedges or shims but, if protruding, cut off flush with edge of bearing plate before packing with grout.

1. Use nonshrink grout, either metallic or nonmetallic, in concealed locations where not exposed to moisture; use nonshrink, nonmetallic grout in exposed locations, unless otherwise indicated.
2. Pack grout solidly between bearing surfaces and plates to ensure that no voids remain.

3.4 INSTALLING METAL BOLLARDS

A. Anchor bollards in place with concrete footings. Center and align bollards in holes 3 inches (75 mm) above bottom of excavation. Place concrete and vibrate or tamp for consolidation. Support and brace bollards in position until concrete has cured.

B. Fill bollards solidly with concrete, mounding top surface to shed water.

3.5 INSTALLING NOSINGS, TREADS, AND THRESHOLDS

A. For nosings embedded in concrete steps or curbs, align nosings flush with riser faces and level with tread surfaces.

3.6 ADJUSTING AND CLEANING

A. Touchup Painting: Immediately after erection, clean field welds, bolted connections, and abraded areas. Paint uncoated and abraded areas with the same material as used for shop painting to comply with SSPC-PA 1 for touching up shop-painted surfaces.

1. Apply by brush or spray to provide a minimum 2.0-mil (0.05-mm) dry film thickness.

B. Galvanized Surfaces: Clean field welds, bolted connections, and abraded areas and repair galvanizing to comply with ASTM A 780.

END OF SECTION 055000

SECTION 055213 - PIPE AND TUBE RAILINGS

PART 1 - GENERAL

1.1 RELATED DOCUMENTS

A. Drawings and general provisions of the Contract, including General and Supplementary Conditions and Division 01 Specification Sections, apply to this Section.

1.2 SUMMARY

A. Section Includes:

1. Steel pipe and tube railings.

B. Related Requirements:

1. Section 055100 "Metal Stairs" for steel tube railings associated with metal stairs.
2. 061000 “Rough Carpentry” for wood blocking for anchoring railings.
3. Section 096900 "Access Flooring" for railings included with access flooring.

1.3 COORDINATION

A. Coordinate selection of shop primers with topcoats to be applied over them. Comply with paint and coating manufacturers' written recommendations to ensure that shop primers and topcoats are compatible with one another.

B. Coordinate installation of anchorages for railings. Furnish setting drawings, templates, and directions for installing anchorages, including sleeves, concrete inserts, anchor bolts, and items with integral anchors, that are to be embedded in concrete or masonry. Deliver such items to Project site in time for installation.

C. Schedule installation so wall attachments are made only to completed walls. Do not support railings temporarily by any means that do not satisfy structural performance requirements.

1.4 ACTION SUBMITTALS

A. Product Data: For the following:

1. Manufacturer's product lines of mechanically connected railings.
2. Railing brackets.
3. Grout, anchoring cement, and paint products.

B. Shop Drawings: Include plans, elevations, sections, details, and attachments to other work.

C. Samples: For each type of exposed finish required.

1. Sections of each distinctly different linear railing member, including handrails, top rails, posts, and balusters.
2. Fittings and brackets.

D. Delegated-Design Submittal: For railings, including analysis data signed and sealed by the qualified professional engineer responsible for their preparation.

1.5 INFORMATIONAL SUBMITTALS

A. Qualification Data: For testing agency.

B. Welding certificates.

C. Paint Compatibility Certificates: From manufacturers of topcoats applied over shop primers certifying that shop primers are compatible with topcoats.

D. Product Test Reports: For pipe and tube railings, for tests performed by a qualified testing agency, according to ASTM E 894 and ASTM E 935.

E. Evaluation Reports: For post-installed anchors, from ICC-ES.

1.6 QUALITY ASSURANCE

A. Welding Qualifications: Qualify procedures and personnel according to the following:

1. AWS D1.1/D1.1M, "Structural Welding Code - Steel."
2. AWS D1.2/D1.2M, "Structural Welding Code - Aluminum."
3. AWS D1.6/D1.6M, "Structural Welding Code - Stainless Steel."

1.7 DELIVERY, STORAGE, AND HANDLING

A. Protect mechanical finishes on exposed surfaces from damage by applying a strippable, temporary protective covering before shipping.

1.8 FIELD CONDITIONS

A. Field Measurements: Verify actual locations of walls and other construction contiguous with metal fabrications by field measurements before fabrication.

PART 2 - PRODUCTS

2.1 MANUFACTURERS

A. Steel Pipe and Tube Railings:

1. Manufacturers: Subject to compliance with requirements, available manufacturers offering products that may be incorporated into the Work include, but are not limited to the following:

   a. Wagner, R & B, Inc.

B. Source Limitations: Obtain each type of railing from single source from single manufacturer.

2.2 PERFORMANCE REQUIREMENTS

A. Delegated Design: Engage a qualified professional engineer, as defined in Section 014000 "Quality Requirements," to design railings, including attachment to building construction.

B. Structural Performance: Railings, including attachment to building construction, shall withstand the effects of gravity loads and the following loads and stresses within limits and under conditions indicated:

1. Handrails and Top Rails of Guards:

   a. Uniform load of 50 lbf/ ft. (0.73 kN/m) applied in any direction.
   b. Concentrated load of 200 lbf (0.89 kN) applied in any direction.
   c. Uniform and concentrated loads need not be assumed to act concurrently.

2. Infill of Guards:

   a. Concentrated load of 50 lbf (0.22 kN) applied horizontally on an area of 1 sq. ft. (0.093 sq. m).
   b. Infill load and other loads need not be assumed to act concurrently.

C. Thermal Movements: Allow for thermal movements from ambient and surface temperature changes.

1. Temperature Change: 120 deg F (67 deg C), ambient; 180 deg F (100 deg C, material surfaces).

2.3 METALS, GENERAL

A. Metal Surfaces, General: Provide materials with smooth surfaces, without seam marks, roller marks, rolled trade names, stains, discolorations, or blemishes.

B. Brackets, Flanges, and Anchors: Cast or formed metal of same type of material and finish as supported rails unless otherwise indicated.

2.4 STEEL AND IRON

A. Tubing: ASTM A 500 (cold formed) orASTM A 513.

B. Pipe: ASTM A 53/A 53M, Type F or Type S, Grade A, Standard Weight (Schedule 40), unless another grade and weight are required by structural loads.

1. Provide galvanized finish for exterior installations and where indicated.

C. Plates, Shapes, and Bars: ASTM A 36/A 36M.

D. Cast Iron: Either gray iron, ASTM A 48/A 48M, or malleable iron, ASTM A 47/A 47M, unless otherwise indicated.

E. Expanded Metal: ASTM F 1267, Type II (expanded and flattened), Class 1 (uncoated).

1. Style Designation: 3/4 number 13.

2.5 FASTENERS

A. General: Provide the following:

1. Ungalvanized-Steel Railings: Plated steel fasteners complying with ASTM B 633 or ASTM F 1941 (ASTM F 1941M), Class Fe/Zn 5 for zinc coating.
2. Hot-Dip Galvanized Railings: Type 304 stainless-steel or hot-dip zinc-coated steel fasteners complying with ASTM A 153/A 153M or ASTM F 2329 for zinc coating.
3. Provide exposed fasteners with finish matching appearance, including color and texture, of railings.

B. Fasteners for Anchoring Railings to Other Construction: Select fasteners of type, grade, and class required to produce connections suitable for anchoring railings to other types of construction indicated and capable of withstanding design loads.

C. Fasteners for Interconnecting Railing Components:
1. Provide concealed fasteners for interconnecting railing components and for attaching them to other work, unless exposed fasteners are unavoidable or are the standard fastening method for railings indicated.

D. Post-Installed Anchors: Torque-controlled expansion anchors capable of sustaining, without failure, a load equal to 6 times the load imposed when installed in unit masonry and 4 times the load imposed when installed in concrete, as determined by testing according to ASTM E 488/E 488M, conducted by a qualified independent testing agency.

1. Material for Interior Locations: Carbon-steel components zinc-plated to comply with ASTM B 633 or ASTM F 1941 (ASTM F 1941M), Class Fe/Zn 5, unless otherwise indicated.

2.6 MISCELLANEOUS MATERIALS

A. Welding Rods and Bare Electrodes: Select according to AWS specifications for metal alloy welded.

B. Etching Cleaner for Galvanized Metal: Complying with MPI#25.

C. Galvanizing Repair Paint: High-zinc-dust-content paint complying with SSPC-Paint 20 and compatible with paints specified to be used over it.

D. Shop Primers: Provide primers that comply with Section 099113 "Exterior Painting" and Section 099123 "Interior Painting."

E. Universal Shop Primer: Fast-curing, lead- and chromate-free, universal modified-alkyd primer complying with MPI#79 and compatible with topcoat.

1. Use primer containing pigments that make it easily distinguishable from zinc-rich primer.

F. Epoxy Zinc-Rich Primer: Complying with MPI#20 and compatible with topcoat.

G. Shop Primer for Galvanized Steel: Primer formulated for exterior use over zinc-coated metal and compatible with finish paint systems indicated.

H. Intermediate Coats and Topcoats: Provide products that comply with Section 099113 "Exterior Painting" and Section 099123 "Interior Painting."

I. Epoxy Intermediate Coat: Complying with MPI #77 and compatible with primer and topcoat.

J. Polyurethane Topcoat: Complying with MPI #72 and compatible with undercoat.

K. Bituminous Paint: Cold-applied asphalt emulsion complying with ASTM D 1187/D 1187M.

L. Anchoring Cement: Factory-packaged, nonshrink, nonstaining, hydraulic-controlled expansion cement formulation for mixing with water at Project site to create pourable anchoring, patching, and grouting compound.

1. Water-Resistant Product: At exterior locations provide formulation that is resistant to erosion from water exposure without needing protection by a sealer or waterproof coating and that is recommended by manufacturer for exterior use.

2.7 FABRICATION

A. General: Fabricate railings to comply with requirements indicated for design, dimensions, member sizes and spacing, details, finish, and anchorage, but not less than that required to support structural loads.

B. Shop assemble railings to greatest extent possible to minimize field splicing and assembly. Disassemble units only as necessary for shipping and handling limitations. Clearly mark units for reassembly and coordinated installation. Use connections that maintain structural value of joined pieces.

C. Cut, drill, and punch metals cleanly and accurately. Remove burrs and ease edges to a radius of approximately 1/32 inch (1 mm) unless otherwise indicated. Remove sharp or rough areas on exposed surfaces.

D. Form work true to line and level with accurate angles and surfaces.

E. Fabricate connections that are exposed to weather in a manner that excludes water. Provide weep holes where water may accumulate.

F. Cut, reinforce, drill, and tap as indicated to receive finish hardware, screws, and similar items.

G. Connections: Fabricate railings with welded connections unless otherwise indicated.

H. Welded Connections: Cope components at connections to provide close fit, or use fittings designed for this purpose. Weld all around at connections, including at fittings.

1. Use materials and methods that minimize distortion and develop strength and corrosion resistance of base metals.
2. Obtain fusion without undercut or overlap.
3. Remove flux immediately.
4. At exposed connections, finish exposed surfaces smooth and blended so no roughness shows after finishing and welded surface matches contours of adjoining surfaces.

I. Nonwelded Connections: Connect members with concealed mechanical fasteners and fittings. Fabricate members and fittings to produce flush, smooth, rigid, hairline joints.

1. Fabricate splice joints for field connection using an epoxy structural adhesive if this is manufacturer's standard splicing method.

J. Form Changes in Direction as Follows:
1. By bending orby inserting prefabricated elbow fittings.

K. For changes in direction made by bending, use jigs to produce uniform curvature for each repetitive configuration required. Maintain cross section of member throughout entire bend without buckling, twisting, cracking, or otherwise deforming exposed surfaces of components.

L. Close exposed ends of railing members with prefabricated end fittings.

M. Provide wall returns at ends of wall-mounted handrails unless otherwise indicated. Close ends of returns unless clearance between end of rail and wall is 1/4 inch (6 mm) or less.

N. Brackets, Flanges, Fittings, and Anchors: Provide wall brackets, flanges, miscellaneous fittings, and anchors to interconnect railing members to other work unless otherwise indicated.

O. Provide inserts and other anchorage devices for connecting railings to concrete or masonry work. Fabricate anchorage devices capable of withstanding loads imposed by railings. Coordinate anchorage devices with supporting structure.

P. For railing posts set in concrete, provide steel sleeves not less than 6 inches (150 mm) long with inside dimensions not less than 1/2 inch (13 mm) greater than outside dimensions of post, with metal plate forming bottom closure.

Q. For removable railing posts, fabricate slip-fit sockets from steel tube or pipe whose ID is sized for a close fit with posts; limit movement of post without lateral load, measured at top, to not more than one-fortieth of post height. Provide socket covers designed and fabricated to resist being dislodged.

1. Provide chain with eye, snap hook, and staple across gaps formed by removable railing sections at locations indicated. Fabricate from same metal as railings.

R. Toe Boards: Where indicated, provide toe boards at railings around openings and at edge of open-sided floors and platforms. Fabricate to dimensions and details indicated.

2.8 STEEL AND IRON FINISHES

A. Galvanized Railings:

1. Hot-dip galvanize exterior steel railings, including hardware, after fabrication.
2. Comply with ASTM A 123/A 123M for hot-dip galvanized railings.
3. Comply with ASTM A 153/A 153M for hot-dip galvanized hardware.
4. Do not quench or apply post galvanizing treatments that might interfere with paint adhesion.
5. Fill vent and drain holes that are exposed in the finished Work, unless indicated to remain as weep holes, by plugging with zinc solder and filing off smooth.

B. For galvanized railings, provide hot-dip galvanized fittings, brackets, fasteners, sleeves, and other ferrous components.

C. Preparing Galvanized Railings for Shop Priming: After galvanizing, thoroughly clean railings of grease, dirt, oil, flux, and other foreign matter, and treat with etching cleaner.

D. For nongalvanized-steel railings, provide nongalvanized ferrous-metal fittings, brackets, fasteners, and sleeves; however, galvanize anchors to be embedded in exterior concrete or masonry.

E. Primer Application: Apply shop primer to prepared surfaces of railings unless otherwise indicated. Comply with requirements in SSPC-PA 1, "Shop, Field, and Maintenance Painting of Steel," for shop painting. Primer need not be applied to surfaces to be embedded in concrete or masonry.
1. Do not apply primer to galvanized surfaces.

F. Shop-Painted Finish: Comply with Section 099113 "Exterior Painting."

1. Color: As selected by Architect from manufacturer's full range.

PART 3 - EXECUTION

3.1 EXAMINATION

3.2 INSTALLATION, GENERAL

A. Fit exposed connections together to form tight, hairline joints.

B. Perform cutting, drilling, and fitting required for installing railings. Set railings accurately in location, alignment, and elevation; measured from established lines and levels and free of rack.

1. Do not weld, cut, or abrade surfaces of railing components that are coated or finished after fabrication and that are intended for field connection by mechanical or other means without further cutting or fitting.
2. Set posts plumb within a tolerance of 1/16 inch in 3 feet (2 mm in 1 m).

3. Align rails so variations from level for horizontal members and variations from parallel with rake of steps and ramps for sloping members do not exceed 1/4 inch in 12 feet (6 mm in 3.5 m).

C. Control of Corrosion: Prevent galvanic action and other forms of corrosion by insulating metals and other materials from direct contact with incompatible materials.

1. Coat, with a heavy coat of bituminous paint, concealed surfaces of aluminum that are in contact with grout, concrete, masonry, wood, or dissimilar metals.

D. Adjust railings before anchoring to ensure matching alignment at abutting joints.

E. Fastening to In-Place Construction: Use anchorage devices and fasteners where necessary for securing railings and for properly transferring loads to in-place construction.

3.3 RAILING CONNECTIONS

A. Nonwelded Connections: Use mechanical or adhesive joints for permanently connecting railing components. Seal recessed holes of exposed locking screws using plastic cement filler colored to match finish of railings.

B. Welded Connections: Use fully welded joints for permanently connecting railing components. Comply with requirements for welded connections in "Fabrication" Article whether welding is performed in the shop or in the field.

C. Expansion Joints: Install expansion joints at locations indicated but not farther apart than required to accommodate thermal movement. Provide slip-joint internal sleeve extending 2 inches (50 mm) beyond joint on either side, fasten internal sleeve securely to one side, and locate joint within 6 inches (150 mm) of post.

3.4 ANCHORING POSTS

A. Use metal sleeves preset and anchored into concrete for installing posts. After posts are inserted into sleeves, fill annular space between post and sleeve with nonshrink, nonmetallic grout, mixed and placed to comply with anchoring material manufacturer's written instructions.

B. Cover anchorage joint with flange of same metal as post, attached to post with set screws.

C. Anchor posts to metal surfaces with oval flanges, angle type, or floor type as required by conditions, connected to posts and to metal supporting members as follows:
1. For steel pipe railings, weld flanges to post and bolt to metal supporting surfaces.

D. Install removable railing sections, where indicated, in slip-fit metal sockets cast in concrete.

3.5 ATTACHING RAILINGS

A. Attach railings to wall with wall brackets, except where end flanges are used. Locate brackets as indicated or, if not indicated, at spacing required to support structural loads.

B. Secure wall brackets and railing end flanges to building construction as follows:

1. For concrete and solid masonry anchorage, use drilled-in expansion shields and hanger or lag bolts.
2. For hollow masonry anchorage, use toggle bolts.
3. For wood stud partitions, use hanger or lag bolts set into studs or wood backing between studs. Coordinate with carpentry work to locate backing members.

3.6 ADJUSTING AND CLEANING

A. Touchup Painting: Immediately after erection, clean field welds, bolted connections, and abraded areas of shop paint, and paint exposed areas with the same material as used for shop painting to comply with SSPC-PA 1 requirements for touching up shop-painted surfaces.

1. Apply by brush or spray to provide a minimum 2.0-mil (0.05-mm) dry film thickness.

B. Galvanized Surfaces: Clean field welds, bolted connections, and abraded areas, and repair galvanizing to comply with ASTM A 780/A 780M.

3.7 PROTECTION

A. Protect finishes of railings from damage during construction period with temporary protective coverings approved by railing manufacturer. Remove protective coverings at time of Substantial Completion.

END OF SECTION 055213

SECTION 061000 - ROUGH CARPENTRY

PART 1 - GENERAL

1.1 RELATED DOCUMENTS

A. Drawings and general provisions of the Contract, including General and Supplementary Conditions and Division 01 Specification Sections, apply to this Section.

1.2 SUMMARY

A. Section Includes:
1. Wood blocking and nailers.
2. Plywood backing panels.

1.3 DEFINITIONS

A. Exposed Framing: Framing not concealed by other construction.

B. Dimension Lumber: Lumber of 2 inches nominal (38 mm actual) or greater but less than 5 inches nominal (114 mm actual) in least dimension.

C. Lumber grading agencies, and the abbreviations used to reference them, include the following:

1. NeLMA: Northeastern Lumber Manufacturers' Association.
2. NLGA: National Lumber Grades Authority.
3. RIS: Redwood Inspection Service.
4. SPIB: The Southern Pine Inspection Bureau.
5. WCLIB: West Coast Lumber Inspection Bureau.
6. WWPA: Western Wood Products Association.

1.4 ACTION SUBMITTALS

A. Product Data: For each type of process and factory-fabricated product. Indicate component materials and dimensions and include construction and application details.

1. Include data for wood-preservative treatment from chemical treatment manufacturer and certification by treating plant that treated materials comply with requirements. Indicate type of preservative used and net amount of preservative retained.
2. Include data for fire-retardant treatment from chemical treatment manufacturer and certification by treating plant that treated materials comply with requirements. Include physical properties of treated materials based on testing by a qualified independent testing agency.
3. For fire-retardant treatments, include physical properties of treated lumber both before and after exposure to elevated temperatures, based on testing by a qualified independent testing agency according to ASTM D 5664.

4. For products receiving a waterborne treatment, include statement that moisture content of treated materials was reduced to levels specified before shipment to Project site.
5. Include copies of warranties from chemical treatment manufacturers for each type of treatment.

1.5 INFORMATIONAL SUBMITTALS

A. Material Certificates: For dimension lumber specified to comply with minimum allowable unit stresses. Indicate species and grade selected for each use and design values approved by the ALSC Board of Review.

B. Evaluation Reports: For the following, from ICC-ES:

1. Wood-preservative-treated wood.
2. Fire-retardant-treated wood.

1.6 QUALITY ASSURANCE

A. Testing Agency Qualifications: For testing agency providing classification marking for fire-retardant treated material, an inspection agency acceptable to authorities having jurisdiction that periodically performs inspections to verify that the material bearing the classification marking is representative of the material tested.

1.7 DELIVERY, STORAGE, AND HANDLING

A. Stack lumber flat with spacers beneath and between each bundle to provide air circulation. Protect lumber from weather by covering with waterproof sheeting, securely anchored. Provide for air circulation around stacks and under coverings.

PART 2 - PRODUCTS

2.1 WOOD PRODUCTS, GENERAL

A. Lumber: DOC PS 20 and applicable rules of grading agencies indicated. If no grading agency is indicated, provide lumber that complies with the applicable rules of any rules-writing agency certified by the ALSC Board of Review. Provide lumber graded by an agency certified by the ALSC Board of Review to inspect and grade lumber under the rules indicated.

1. Factory mark each piece of lumber with grade stamp of grading agency.
2. Where nominal sizes are indicated, provide actual sizes required by DOC PS 20 for moisture content specified. Where actual sizes are indicated, they are minimum dressed sizes for dry lumber.
3. Provide dressed lumber, S4S, unless otherwise indicated.

2.2 WOOD-PRESERVATIVE-TREATED LUMBER

A. Preservative Treatment by Pressure Process: AWPA U1; Use Category UC2 for interior construction not in contact with the ground, Use Category UC3b for exterior construction not in contact with the ground, and Use Category UC4a for items in contact with the ground.

1. Preservative Chemicals: Acceptable to authorities having jurisdiction and containing no arsenic or chromium. Do not use inorganic boron (SBX) for sill plates.
2. For exposed items indicated to receive a stained or natural finish, use chemical formulations that do not require incising, contain colorants, bleed through, or otherwise adversely affect finishes.

B. Kiln-dry lumber after treatment to a maximum moisture content of 19 percent. Do not use material that is warped or that does not comply with requirements for untreated material.

C. Mark lumber with treatment quality mark of an inspection agency approved by the ALSC Board of Review.

D. Application: Treat items indicated on Drawings, and the following:

1. Wood cants, nailers, curbs, equipment support bases, blocking, stripping, and similar members in connection with roofing, flashing, vapor barriers, and waterproofing.
2. Wood blocking, furring, and similar concealed members in contact with masonry or concrete.
3. Wood framing and furring attached directly to the interior of below-grade exterior masonry or concrete walls.

2.3 FIRE-RETARDANT-TREATED MATERIALS

A. General: Where fire-retardant-treated materials are indicated, use materials complying with requirements in this article, that are acceptable to authorities having jurisdiction, and with fire-test-response characteristics specified as determined by testing identical products per test method indicated by a qualified testing agency.

B. Fire-Retardant-Treated Lumber and Plywood by Pressure Process: Products with a flame spread index of 25 or less when tested according to ASTM E 84, and with no evidence of significant progressive combustion when the test is extended an additional 20 minutes, and with the flame front not extending more than 10.5 feet (3.2 m) beyond the centerline of the burners at any time during the test.

1. Use treatment that does not promote corrosion of metal fasteners.
2. Exterior Type: Treated materials shall comply with requirements specified above for fire-retardant-treated lumber and plywood by pressure process after being subjected to accelerated weathering according to ASTM D 2898. Use for exterior locations and where indicated.
3. Interior Type A: Treated materials shall have a moisture content of 28 percent or less when tested according to ASTM D 3201 at 92 percent relative humidity. Use where exterior type is not indicated.

4. Design Value Adjustment Factors: Treated lumber shall be tested according ASTM D 5664 and design value adjustment factors shall be calculated according to ASTM D 6841.

C. Identify fire-retardant-treated wood with appropriate classification marking of qualified testing agency.

D. Application: Treat items indicated on Drawings, and the following:
1. Concealed blocking.
2. Plywood backing panels.

2.4 MISCELLANEOUS LUMBER

A. General: Provide miscellaneous lumber indicated and lumber for support or attachment of other construction, including the following:

1. Blocking.
2. Nailers.
3. Rooftop equipment bases and support curbs.
4. Cants.
5. Furring.
6. Grounds.

B. For items of dimension lumber size, provide Construction or No. 2 grade lumber and any of the following species:

1. Hem-fir (north); NLGA.
2. Mixed southern pine; SPIB.
3. Spruce-pine-fir; NLGA.
4. Hem-fir; WCLIB or WWPA.
5. Spruce-pine-fir (south); NeLMA, WCLIB, or WWPA.
6. Western woods; WCLIB or WWPA.
7. Northern species; NLGA.
8. Eastern softwoods; NeLMA.

C. For blocking and nailers used for attachment of other construction, select and cut lumber to eliminate knots and other defects that will interfere with attachment of other work.

D. For furring strips for installing plywood or hardboard paneling, select boards with no knots capable of producing bent-over nails and damage to paneling.

2.5 PLYWOOD BACKING PANELS

A. Telephone, IT, and electrical equipment Backing Panels: DOC PS 1, Exposure 1, C-D Plugged, fire-retardant treated, in thickness indicated or, if not indicated, not less than 3/4-inch (19-mm) nominal thickness.

1. Plywood shall comply with the testing and product requirements of the California Department of Health Services' "Standard Practice for the Testing of Volatile Organic Emissions from Various Sources Using Small-Scale Environmental Chambers."

2.6 FASTENERS

A. General: Provide fasteners of size and type indicated that comply with requirements specified in this article for material and manufacture.

1. Where rough carpentry is exposed to weather, in ground contact, pressure-preservative treated, or in area of high relative humidity, provide fasteners with hot-dip zinc coating complying with ASTM A 153/A 153M.

B. Nails, Brads, and Staples: ASTM F 1667.

C. Power-Driven Fasteners: NES NER-272.

D. Wood Screws: ASME B18.6.1.

E. Lag Bolts: ASME B18.2.1 (ASME B18.2.3.8M).

F. Bolts: Steel bolts complying with ASTM A 307, Grade A (ASTM F 568M, Property Class 4.6); with ASTM A 563 (ASTM A 563M) hex nuts and, where indicated, flat washers.

G. Expansion Anchors: Anchor bolt and sleeve assembly of material indicated below with capability to sustain, without failure, a load equal to six times the load imposed when installed in unit masonry assemblies and equal to four times the load imposed when installed in concrete as determined by testing per ASTM E 488 conducted by a qualified independent testing and inspecting agency.

1. Material: Carbon-steel components, zinc plated to comply with ASTM B 633, Class Fe/Zn 5.

PART 3 - EXECUTION

3.1 INSTALLATION, GENERAL

A. Set rough carpentry to required levels and lines, with members plumb, true to line, cut, and fitted. Fit rough carpentry to other construction; scribe and cope as needed for accurate fit. Locate nailers, blocking, grounds, and similar supports to comply with requirements for attaching other construction.

B. Install plywood backing panels over gypsum board by fastening to studs; coordinate locations with utilities requiring backing panels. Install fire-retardant treated plywood backing panels with classification marking of testing agency exposed to view.

C. Provide fire blocking in furred spaces, stud spaces, and other concealed cavities as indicated and as follows:

D. Comply with AWPA M4 for applying field treatment to cut surfaces of preservative-treated lumber.

1. Use inorganic boron for items that are continuously protected from liquid water.
2. Use copper naphthenate for items not continuously protected from liquid water.

E. Securely attach rough carpentry work to substrate by anchoring and fastening as indicated, complying with the following:

1. NES NER-272 for power-driven fasteners.
2. Table 2304.9.1, "Fastening Schedule," in ICC's International Building Code.
3. Table R602.3(1), "Fastener Schedule for Structural Members," and Table R602.3(2), "Alternate Attachments," in ICC's International Residential Code for One- and Two-Family Dwellings.

F. Use steel common nails for blocking and nailers. Attach plywood backing panels with screws. Select fasteners of size that will not fully penetrate members where opposite side will be exposed to view or will receive finish materials. Make tight connections between members. Install fasteners without splitting wood. Drive nails snug but do not countersink nail heads unless otherwise indicated.

G. For exposed work, arrange fasteners in straight rows parallel with edges of members, with fasteners evenly spaced, and with adjacent rows staggered.

3.2 PROTECTION

A. Protect wood that has been treated with inorganic boron (SBX) from weather. If, despite protection, inorganic boron-treated wood becomes wet, apply EPA-registered borate treatment. Apply borate solution by spraying to comply with EPA-registered label.

B. Protect rough carpentry from weather. If, despite protection, rough carpentry becomes **wet**, apply EPA-registered borate treatment. Apply borate solution by spraying to comply with EPA-registered label.

END OF SECTION 061000

SECTION 064116 - PLASTIC-LAMINATE-FACED ARCHITECTURAL CABINETS

PART 1 - GENERAL

1.1 RELATED DOCUMENTS

A. Drawings and general provisions of the Contract, including General and Supplementary Conditions and Division 01 Specification Sections, apply to this Section.

1.2 SUMMARY

A. Section Includes:

1. Plastic-laminate-faced architectural cabinets.
2. Wood furring, blocking, shims, and hanging strips for installing plastic-laminate-faced architectural cabinets unless concealed within other construction before cabinet installation.

B. Related Requirements:

1. Section 061000 "Rough Carpentry" for wood furring, blocking, shims, and hanging strips required for installing cabinets and concealed within other construction before cabinet installation.

1.3 PREINSTALLATION MEETINGS

A. Preinstallation Conference: Conduct conference at Project site.

1.4 ACTION SUBMITTALS

A. Product Data: For each type of product, including panel products high-pressure decorative laminate adhesive for bonding plastic laminate fire-retardant-treated materials andcabinet hardware and accessories.

1. Include data for fire-retardant treatment from chemical-treatment manufacturer and certification by treating plant that treated materials comply with requirements.

B. Shop Drawings: Show location of each item, dimensioned plans and elevations, large-scale details, attachment devices, and other components.

1. Show details full size.
2. Show locations and sizes of furring, blocking, and hanging strips, including concealed blocking and reinforcement specified in other Sections.
3. Show locations and sizes of cutouts and holes for electrical switches and outlets and other items installed in architectural plastic-laminate cabinets.
4. Apply AWI Quality Certification Program label to Shop Drawings.

C. Samples for Initial Selection:

1. Plastic laminates.
2. PVC edge material.
3. Thermoset decorative panels.

D. Samples for Verification:

1. Plastic laminates, 12 by 12 inches (300 by 300 mm), for each type, color, pattern, and surface finish, with one sample applied to core material and specified edge material applied to one edge.
2. Wood-grain plastic laminates, 12 by 24 inches (300 by 600 mm), for each type, pattern and surface finish, with one sample applied to core material and specified edge material applied to one edge.
3. Thermoset decorative panels, 8 by 10 inches (200 by 250 mm), for each color, pattern, and surface finish, with edge banding on one edge.
4. Corner pieces as follows:

   a. Cabinet-front frame joints between stiles and rails, as well as exposed end pieces, 18 inches (450 mm) high by 18 inches (450 mm) wide by 6 inches (150 mm) deep.
   b. Miter joints for standing trim.

5. Exposed cabinet hardware and accessories, one unit for each type and finish.

1.5 INFORMATIONAL SUBMITTALS

A. Qualification Data: For Installer and fabricator.

B. Product Certificates: For each type of product. the following:

1. Composite wood and agrifiber products.
2. Thermoset decorative panels.
3. High-pressure decorative laminate.
4. Adhesives.

C. Woodwork Quality Standard Compliance Certificates: AWI Quality Certification Program certificates.

D. Evaluation Reports: For fire-retardant-treated materials, from ICC-ES.

1.6 QUALITY ASSURANCE

A. Fabricator Qualifications: Shop that employs skilled workers who custom fabricate products similar to those required for this Project and whose products have a record of successful in-service performance. Shop is a certified participant in AWI's Quality Certification Program.

B. Testing Agency Qualifications: For testing agency providing classification marking for fire-retardant-treated material, an inspection agency acceptable to authorities having jurisdiction that periodically performs inspections to verify that the material bearing the classification marking is representative of the material tested.

C. Mockups: Build mockups to verify selections made under Sample submittals and to demonstrate aesthetic effects and set quality standards for materials and execution.

1. Build mockups of typical plastic-laminate cabinets as shown on Drawings.
2. Subject to compliance with requirements, approved mockups may become part of the completed Work if undisturbed at time of Substantial Completion.

1.7 DELIVERY, STORAGE, AND HANDLING

A. Do not deliver cabinets until painting and similar operations that could damage woodwork have been completed in installation areas. If cabinets must be stored in other than installation areas, store only in areas where environmental conditions comply with requirements specified in "Field Conditions" Article.

1.8 FIELD CONDITIONS

A. Environmental Limitations: Do not deliver or install cabinets until building is enclosed, wet work is complete, and HVAC system is operating and maintaining temperature and relative humidity at occupancy levels during the remainder of the construction period.

B. Field Measurements: Where cabinets are indicated to fit to other construction, verify dimensions of other construction by field measurements before fabrication, and indicate measurements on Shop Drawings. Coordinate fabrication schedule with construction progress to avoid delaying the Work.

1. Locate concealed framing, blocking, and reinforcements that support cabinets by field measurements before being enclosed, and indicate measurements on Shop Drawings.

C. Established Dimensions: Where cabinets are indicated to fit to other construction, establish dimensions for areas where cabinets are to fit. Provide allowance for trimming at site, and coordinate construction to ensure that actual dimensions correspond to established dimensions.

1.9 COORDINATION

A. Coordinate sizes and locations of framing, blocking, furring, reinforcements, and other related units of Work specified in other Sections to ensure that cabinets can be supported and installed as indicated.

B. Hardware Coordination: Distribute copies of approved hardware schedule specified in Section 087111 "Door Hardware (Descriptive Specification)" to fabricator of architectural woodwork; coordinate Shop Drawings and fabrication with hardware requirements.

PART 2 - PRODUCTS

2.1 PLASTIC-LAMINATE-FACED ARCHITECTURAL CABINETS

A. Quality Standard: Unless otherwise indicated, comply with the "Architectural Woodwork Standards" for grades of architectural plastic-laminate cabinets indicated for construction, finishes, installation, and other requirements.

1. Provide labels and certificates from AWI certification program indicating that woodwork, including installation, complies with requirements of grades specified.

B. Grade: Custom.

C. Regional Materials: Wood products shall be manufactured within 500 miles (800 km) of Project site.

D. Type of Construction: Face frame.

E. Cabinet, Door, and Drawer Front Interface Style: Flush overlay.

F. Reveal Dimension: 1/2 inch (13 mm).

G. High-Pressure Decorative Laminate: NEMA LD 3, grades as indicated or if not indicated, as required by woodwork quality standard.

1. Manufacturers: Subject to compliance with requirements, available manufacturers offering products that may be incorporated into the Work include, but are not limited to the following:

a. Abet Laminati Inc.
b. Formica Corporation.
c. Lamin-Art, Inc.
d. Pionite; a Panolam Industries International, Inc. brand.
e. Wilsonart.
f. Nevamar Company, LLC; Decorative Products Div.

H. Laminate Cladding for Exposed Surfaces:

1. Horizontal Surfaces: Grade HGS.
2. Postformed Surfaces: Grade HGP.
3. Vertical Surfaces: Grade VGS.
4. Edges: PVC edge banding, 0.12 inch (3 mm) thick, matching laminate in color, pattern, and finish.
5. Pattern Direction: Vertically for doors and fixed panels, horizontally for drawer fronts.

I. Materials for Semiexposed Surfaces:

1. Surfaces Other Than Drawer Bodies: Thermoset decorative panels.

a. Edges of Plastic-Laminate Shelves: PVC edge banding, 0.12 inch (3 mm) thick, matching laminate in color, pattern, and finish.

b. Edges of Thermoset Decorative Panel Shelves: PVC or polyester edge banding.
c. For semiexposed backs of panels with exposed plastic-laminate surfaces, provide surface of high-pressure decorative laminate, NEMA LD 3, Grade VGS.

2. Drawer Sides and Backs: Thermoset decorative panels with PVC or polyester edge banding.
3. Drawer Bottoms: Thermoset decorative panels.

J. Concealed Backs of Panels with Exposed Plastic-Laminate Surfaces: High-pressure decorative laminate, NEMA LD 3, Grade BKL.

K. Drawer Construction: Fabricate with exposed fronts fastened to subfront with mounting screws from interior of body.

1. Join subfronts, backs, and sides with glued dovetail joints.

L. Colors, Patterns, and Finishes: Provide materials and products that result in colors and textures of exposed laminate surfaces complying with the following requirements:
1. As selected by Architect from laminate manufacturer's full range in the following categories:

a. Solid colors, mattefinish.
b. Solid colors with core same color as surface, mattefinish.
c. Wood grains, mattefinish.
d. Patterns, mattefinish.

2.2 MATERIALS

A. Wood Products: Provide materials that comply with requirements of referenced quality standard for each type of woodwork and quality grade specified unless otherwise indicated.

1. Wood Moisture Content: **4 to 9** percent.

B. Composite Wood and Agrifiber Products: Provide materials that comply with requirements of referenced quality standard for each type of woodwork and quality grade specified unless otherwise indicated.
1. Thermoset Decorative Panels: Particleboard or medium-density fiberboard finished with thermally fused, melamine-impregnated decorative paper and complying with requirements of NEMA LD 3, Grade VGL, for test methods 3.3, 3.4, 3.6, 3.8, and 3.10.

2.3 CABINET HARDWARE AND ACCESSORIES

A. General: Provide cabinet hardware and accessory materials associated with architectural cabinets except for items specified in Section 087111 "Door Hardware (Descriptive Specification)."

B. Butt Hinges: 2-3/4-inch (70-mm), five-knuckle steel hinges made from 0.095-inch- (2.4-mm-) thick metal, and as follows:

1. Semiconcealed Hinges for Flush Doors: BHMA A156.9, B01361.

2. Semiconcealed Hinges for Overlay Doors: BHMA A156.9, B01521.

C. Frameless Concealed Hinges (European Type): BHMA A156.9, B01602, 135 degrees of opening, self-closing.

D. Back-Mounted Pulls: BHMA A156.9, B02011.

E. Wire Pulls: Back mounted, solid metal, 4 inches (100 mm) long, 5/16 inch (8 mm) in diameter.

F. Catches: Magnetic catches, BHMA A156.9, B03141.

G. Adjustable Shelf Standards and Supports: Knape and Vogt No. 255 standards and No. 256 shelf supports.

H. Drawer Slides: BHMA A156.9.
1. Grade 1HD-100 and Grade 1HD-200: Side mounted; full-extension type; zinc-plated-steel ball-bearing slides.
2. For drawers not more than 3 inches (75 mm) high and not more than 24 inches (600 mm) wide, provide Grade 1.
3. For drawers more than 3 inches (75 mm) high but not more than 6 inches (150 mm) high and not more than 24 inches (600 mm) wide, provide Grade 1HD-100.
4. For drawers more than 6 inches (150 mm) high or more than 24 inches (600 mm) wide, provide Grade 1HD-200.
5. For computer keyboard shelves, provide Grade 1HD-100.

I. Aluminum Slides for Sliding Glass Doors: BHMA A156.9, B07063.

J. Door Locks: BHMA A156.11, E07121.

K. Drawer Locks: BHMA A156.11, E07041.

L. Door and Drawer Silencers: BHMA A156.16, L03011.

M. Exposed Hardware Finishes: For exposed hardware, provide finish that complies with BHMA A156.18 for BHMA finish number indicated.
1. Satin Stainless Steel: BHMA 630.

N. For concealed hardware, provide manufacturer's standard finish that complies with product class requirements in BHMA A156.9.

2.4 MISCELLANEOUS MATERIALS

A. Furring, Blocking, Shims, and Hanging Strips: Softwood or hardwood lumber, kiln dried to less than 15 percent moisture content.

B. Anchors: Select material, type, size, and finish required for each substrate for secure anchorage. Provide metal expansion sleeves or expansion bolts for post-installed anchors. Use nonferrous-metal or hot-dip galvanized anchors and inserts at inside face of exterior walls and at floors.

C. Do not use adhesives that contain urea formaldehyde.

D. Adhesive for Bonding Plastic Laminate: at woodworker's option.

2.5 FABRICATION

A. Sand fire-retardant-treated wood lightly to remove raised grain on exposed surfaces before fabrication.

B. Fabricate cabinets to dimensions, profiles, and details indicated.

C. Complete fabrication, including assembly and hardware application, to maximum extent possible before shipment to Project site. Disassemble components only as necessary for shipment and installation. Where necessary for fitting at site, provide ample allowance for scribing, trimming, and fitting.

1. Notify Architect seven days in advance of the dates and times woodwork fabrication will be complete.
2. Trial fit assemblies at fabrication shop that cannot be shipped completely assembled. Install dowels, screws, bolted connectors, and other fastening devices that can be removed after trial fitting. Verify that various parts fit as intended and check measurements of assemblies against field measurements before disassembling for shipment.

D. Shop-cut openings to maximum extent possible to receive hardware, appliances, electrical work, and similar items. Locate openings accurately and use templates or roughing-in diagrams to produce accurately sized and shaped openings. Sand edges of cutouts to remove splinters and burrs.

2.6 PLASTIC-LAMINATE COUNTERTOPS

A. Grade: Custom.

B. High-Pressure Decorative Laminate Grade: HGS.

C. Colors, Patterns, and Finishes: Provide materials and products that result in colors and textures of exposed laminate surfaces complying with the following requirements:

1. As selected by Architect from manufacturer's full range in the following categories:

a. Solid colors, matte finish.
b. Patterns, matte finish.

D. Edge Treatment: Same as laminate cladding on horizontal surfaces.

E. Core Material: Particleboard made with exterior glue.

F. Core Material at Sinks: Particleboard made with exterior glue.

G. Backer Sheet: Provide plastic-laminate backer sheet, Grade BKL, on underside of countertop substrate.

2.7 CLOSET AND UTILITY SHELVING

A. Grade: Custom.

B. Shelf Material: particle board, 3/4-inch (19-mm) or 1-inch if span exceeds 36 inches, thermoset decorative panel with PVC edge banding, 0.12 inch (3 mm) thick.

C. Cleats: 3/4 inch thick Particle board, finished with thermoset decorative panel.

PART 3 - EXECUTION

3.1 PREPARATION

A. Before installation, condition cabinets to average prevailing humidity conditions in installation areas.

B. Before installing cabinets, examine shop-fabricated work for completion and complete work as required.

3.2 INSTALLATION

A. Grade: Install cabinets to comply with same grade as item to be installed.

B. Assemble cabinets and complete fabrication at Project site to the extent that it was not completed in the shop.

C. Install cabinets level, plumb, true, and straight. Shim as required with concealed shims. Install level and plumb to a tolerance of 1/8 inch in 96 inches (3 mm in 2400 mm).

D. Scribe and cut cabinets to fit adjoining work, refinish cut surfaces, and repair damaged finish at cuts.

E. Anchor cabinets to anchors or blocking built in or directly attached to substrates. Secure with countersunk, concealed fasteners and blind nailing. Use fine finishing nails or finishing screws for exposed fastening, countersunk and filled flush with woodwork.

1. Use filler matching finish of items being installed.

F. Cabinets: Install without distortion so doors and drawers fit openings properly and are accurately aligned. Adjust hardware to center doors and drawers in openings and to provide unencumbered operation. Complete installation of hardware and accessory items as indicated.

1. Install cabinets with no more than 1/8 inch in 96-inch (3 mm in 2400-mm) sag, bow, or other variation from a straight line.
2. Fasten wall cabinets through back, near top and bottom, and at ends not more than 16 inches (400 mm) o.c. with No. 10 wafer-head sheet metal screws through metal backing or metal framing behind wall finish.

3.3 ADJUSTING AND CLEANING

A. Repair damaged and defective cabinets, where possible, to eliminate functional and visual defects; where not possible to repair, replace woodwork. Adjust joinery for uniform appearance.

B. Clean, lubricate, and adjust hardware.

C. Clean cabinets on exposed and semiexposed surfaces.

END OF SECTION 064116

SECTION 072100 - THERMAL INSULATION

PART 1 - GENERAL

1.1 RELATED DOCUMENTS

A. Drawings and general provisions of the Contract, including General and Supplementary Conditions and Division 01 Specification Sections, apply to this Section.

1.2 SUMMARY

A. Section Includes:
   1. Glass-fiber blanket insulation.

B. Related Sections:
   1. Section 075216 "Styrene-Butadiene-Styrene (SBS) Modified Bituminous Membrane Roofing" for insulation specified as part of roofing construction.
   2. Section 092116.23 "Gypsum Board Shaft Wall Assemblies for installation in wood- and metal-framed assemblies of insulation specified by referencing this Section.

1.3 ACTION SUBMITTALS

A. Product Data: For each type of product indicated.

1.4 INFORMATIONAL SUBMITTALS

A. Product Test Reports: Based on evaluation of comprehensive tests performed by a qualified testing agency, for each product.

1.5 QUALITY ASSURANCE

A. Surface-Burning Characteristics: As determined by testing identical products according to ASTM E 84 by a qualified testing agency. Identify products with appropriate markings of applicable testing agency.

1.6 DELIVERY, STORAGE, AND HANDLING

A. Protect insulation materials from physical damage and from deterioration due to moisture, soiling, and other sources. Store inside and in a dry location. Comply with manufacturer's written instructions for handling, storing, and protecting during installation.

PART 2 - PRODUCTS

2.1 GLASS-FIBER BLANKET INSULATION

A. Manufacturers: Subject to compliance with requirements, available manufacturers offering products that may be incorporated into the Work include, but are not limited to, the following:

1. CertainTeed Corporation.
2. Guardian Building Products, Inc.
3. Johns Manville.
4. Knauf Insulation.
5. Owens Corning.

B. Unfaced, Glass-Fiber Blanket Insulation: ASTM C 665, Type I; with maximum flame-spread and smoke-developed indexes of 25 and 50, respectively, per ASTM E 84; passing ASTM E 136 for combustion characteristics; in thickness indicated on the drawings.

PART 3 - EXECUTION

3.1 PREPARATION

A. Clean substrates of substances that are harmful to insulation or that interfere with insulation attachment.

3.2 INSTALLATION, GENERAL

A. Comply with insulation manufacturer's written instructions applicable to products and applications indicated.

B. Install insulation that is undamaged, dry, and unsoiled and that has not been left exposed to ice, rain, or snow at any time.

C. Extend insulation to envelop entire area to be insulated. Cut and fit tightly around obstructions and fill voids with insulation. Remove projections that interfere with placement.

D. Provide sizes to fit applications indicated and selected from manufacturer's standard thicknesses, widths, and lengths. Apply single layer of insulation units to produce thickness indicated unless multiple layers are otherwise shown or required to make up total thickness.

3.3 INSTALLATION OF INSULATION FOR FRAMED CONSTRUCTION

A. Apply insulation units to substrates by method indicated, complying with manufacturer's written instructions. If no specific method is indicated, bond units to substrate with adhesive or use mechanical anchorage to provide permanent placement and support of units.

B. Glass-Fiber Blanket Insulation: Install in cavities formed by framing members according to the following requirements:

1. Use insulation widths and lengths that fill the cavities formed by framing members. If more than one length is required to fill the cavities, provide lengths that will produce a snug fit between ends.
2. Place insulation in cavities formed by framing members to produce a friction fit between edges of insulation and adjoining framing members.
3. Maintain 3-inch (76-mm) clearance of insulation around recessed lighting fixtures not rated for or protected from contact with insulation.
4. For metal-framed wall cavities where cavity heights exceed 96 inches (2438 mm), support unfaced blankets mechanically and support faced blankets by taping flanges of insulation to flanges of metal studs.

3.4 PROTECTION

A. Protect installed insulation from damage due to harmful weather exposures, physical abuse, and other causes. Provide temporary coverings or enclosures where insulation is subject to abuse and cannot be concealed and protected by permanent construction immediately after installation.

END OF SECTION 072100

SECTION 072413 - POLYMER-BASED EXTERIOR INSULATION AND FINISH SYSTEM (EIFS)

PART 1 - GENERAL

1.1 RELATED DOCUMENTS

A. Drawings and general provisions of the Contract, including General and Supplementary Conditions and Division 1 Specification Sections, apply to this Section.

1.2 SUMMARY

A. Section Includes:

1. Exterior insulation and finish system (EIFS) applied over concrete.

B. Related Sections:

1. Division 07 Section "Joint Sealants" for sealing joints in EIFS with elastomeric joint sealants.

1.3 SYSTEM DESCRIPTION

A. Class PB EIFS: A non-load-bearing, exterior wall cladding system that consists of an insulation board attached adhesively, mechanically, or both to the substrate; an integrally reinforced base coat; and a textured protective finish coat.

1.4 PERFORMANCE REQUIREMENTS

A. EIFS Performance: Comply with the following:

1. Bond Integrity: Free from bond failure within EIFS components or between system and supporting wall construction, resulting from exposure to fire, wind loads, weather, or other in-service conditions.
2. Weathertightness: Resistant to water penetration from exterior into EIFS and assemblies behind it or through them into interior of building that results in deterioration of thermal-insulating effectiveness or other degradation of EIFS and assemblies behind it, including substrates, supporting wall construction, and interior finish.

B. Class PB EIFS: Provide EIFS having physical properties and structural performance that comply with the following:

1. Abrasion Resistance: Sample consisting of 1-inch- (25.4-mm-) thick EIFS mounted on 1/2-inch- (12.7-mm-) thick gypsum board; cured for a minimum of 28 days; and showing no cracking, checking, or loss of film integrity after exposure to 528 quarts (500 L) of sand when tested per ASTM D 968, Method A.

2. Absorption-Freeze Resistance: No visible deleterious effects and negligible weight loss after 60 cycles per EIMA 101.01.
3. Accelerated Weathering: Five samples per ICC-ES AC219 showing no cracking, checking, crazing, erosion, rusting, blistering, peeling, delamination, or other characteristics that might affect performance as a wall cladding after testing for 2000 hours when viewed under 5 times magnification per ASTM G 153 or ASTM G 154.
4. Freeze-Thaw: No surface changes, cracking, checking, crazing, erosion, rusting, blistering, peeling, or delamination, or indications of delamination between components when viewed under 5 times magnification after 60 cycles per EIMA 101.01.
5. Mildew Resistance of Finish Coat: Sample applied to 2-by-2-inch (50.8-by-50.8-mm) clean glass substrate, cured for 28 days, and showing no growth when tested per ASTM D 3273 and evaluated according to ASTM D 3274.
6. Salt-Spray Resistance: No deleterious affects when tested according to ICC-ES AC219.
7. Tensile Adhesion: No failure in the EIFS, adhesive, base coat, or finish coat when tested per EIMA 101.03.
8. Water Penetration: Sample consisting of 1-inch- (25.4-mm-) thick EIFS mounted on 1/2-inch- (12.7-mm-)thick gypsum board, cured for 28 days, and showing no water penetration into the plane of the base coat to expanded-polystyrene board interface of the test specimen after 15 minutes at 6.24 lbf/sq. ft. (299 Pa) of air pressure difference or 20 percent of positive design wind pressure, whichever is greater, across the specimen during a test period when tested per EIMA 101.02.
9. Water Resistance: Three samples, each consisting of 1-inch- (25.4-mm-) thick EIFS mounted on 1/2-inch- (12.7-mm-) thick gypsum board; cured for 28 days; and showing no cracking, checking, crazing, erosion, rusting, blistering, peeling, or delamination after testing for 14 days per ASTM D 2247.
10. Wind-Driven-Rain Resistance: Resist wind-driven rain according to ICC-ES AC219.
11. Impact Resistance: Sample consisting of 1-inch- (25.4-mm-) thick EIFS when constructed, conditioned, and tested per EIMA 101.86; and meeting or exceeding the following:

    a. Standard Impact Resistance: 25 to 49 inch-lb (2.8 to 5.6 J).Parapets only.
    b. High Impact Resistance: 90 to 150 inch-lb (10.2 to 17 J). All other locations than parapets.

12. Structural Performance Testing: EIFS assembly and components shall comply with ICC-ES AC219 when tested per ASTM E 330.

1.5 SUBMITTALS

A. Product Data: For each type and component of EIFS indicated.

B. Shop Drawings: For EIFS. Include plans, elevations, sections, details of components, details of penetration and termination, flashing details, joint locations and configurations, fastening and anchorage details, and connections and attachments to other work.

C. Samples for Initial Selection: For each type of finish-coat color and texture indicated.

1. Include similar Samples of joint sealants and exposed accessories involving color selection.

D. Samples for Verification: 24-inch- (600-mm-) square panels for each type of finish-coat color and texture indicated, prepared using same tools and techniques intended for actual work including a typical control joint filled with sealant of color selected.

1. Include sealants and exposed accessory samples to verify color selected.

E. Qualification Data: For Installer.

F. Manufacturer Certificates: Signed by manufacturers certifying that EIFS and joint sealants] comply with requirements.

G. Product Test Reports: Based on evaluation of comprehensive tests performed by a qualified testing agency, for each insulation, reinforcing mesh, joint sealant, and coating.

H. Field quality-control reports.

I. Maintenance Data: For EIFS to include in maintenance manuals.

1.6 QUALITY ASSURANCE

A. Installer Qualifications: An installer who is certified in writing by EIFS manufacturer as qualified to install manufacturer's system using trained workers.

B. Source Limitations: Obtain EIFS from single source from single EIFS manufacturer and from sources approved by EIFS manufacturer as compatible with system components.

C. Fire-Test-Response Characteristics: Provide EIFS and system components with the following fire-test-response characteristics as determined by testing identical EIFS and system components per test method indicated below by UL or another testing and inspecting agency acceptable to authorities having jurisdiction. Identify products with appropriate markings of applicable testing agency.

1. Fire-Resistance Characteristics: Provide materials and construction tested for fire resistance per ASTM E 119.
2. Radiant Heat Exposure: No ignition of EIFS when tested according to NFPA 268.
3. Potential Heat: Acceptable level when tested according to NFPA 259.
4. Surface-Burning Characteristics: Provide insulation board, adhesives, base coats, and finish coats with flame-spread index of 25 or less and smoke-developed index of 450 or less, per ASTM E 84.

D. Mockups: Build mockups to verify selections made under sample submittals and to demonstrate aesthetic effects and set quality standards for materials and execution and set quality standards for fabrication and installation.

1. Approved mockups may become part of the completed Work if undisturbed at time of Substantial Completion.

E. Pre-installation Conference: Conduct conference at Project site.

1.7 DELIVERY, STORAGE, AND HANDLING

A. Deliver materials in original, unopened packages with manufacturers' labels intact and clearly identifying products.

B. Store materials inside and under cover; keep them dry and protected from weather, direct sunlight, surface contamination, aging, corrosion, damaging temperatures, construction traffic, and other causes.

1. Stack insulation board flat and off the ground.
2. Protect plastic insulation against ignition at all times. Do not deliver plastic insulating materials to Project site before installation time.
3. Complete installation and concealment of plastic materials as rapidly as possible in each area of construction.

1.8 PROJECT CONDITIONS

A. Weather Limitations: Maintain ambient temperatures above 40 deg F (4.4 deg C) for a minimum of 24 hours before, during, and after adhesives or coatings are applied. Do not apply EIFS adhesives or coatings during rainfall. Proceed with installation only when existing and forecasted weather conditions and ambient outdoor air, humidity, and substrate temperatures permit EIFS to be applied, dried, and cured according to manufacturers' written instructions and warranty requirements.

1.9 COORDINATION

A. Coordinate installation of EIFS with related Work specified in other Sections to ensure that wall assemblies, including sheathing, flashing, trim, joint sealants, windows, and doors, are protected against damage from the effects of weather, age, corrosion, moisture, and other causes. Do not allow water to penetrate behind flashing and barrier coating of EIFS.

PART 2 - PRODUCTS

2.1 MANUFACTURERS

A. Manufacturers: Subject to compliance with requirements, available manufacturers offering products that may be incorporated into the Work include, but are not limited to, the following:

1. Acrocrete, Inc.
2. Corev America, Inc.
3. Dryvit Systems, Inc.
4. El Rey Stucco Company, Inc.; a brand of ParexLahabra, Inc.
5. Finestone; Degussa Wall Systems, Inc.
6. Master Wall, Inc.
7. Omega Products International, Inc.
8. Parex, Inc.; a brand of ParexLahabra, Inc.
9. Pleko LLC.

10. Senergy; Degussa Wall Systems, Inc.
11. SonoWall; Degussa Wall Systems, Inc.
12. Sto Corp.
13. Stuc-O-Flex International, Inc.
14. TEC; an H. B. Fuller company.
15. Total Wall Inc.

2.2 MATERIALS

A. Compatibility: Provide adhesive, fasteners, board insulation, reinforcing meshes, base- and finish-coat systems, sealants, and accessories that are compatible with one another and with substrates and approved for use by EIFS manufacturer for Project.

B. Waterproof Air/Weathertight Membrane Coat: Apply over surfaces of sheathing in accordance with manufacturer’s instructions to provide weatherproof coating on surface of sheathing. Sheathing joints shall be covered with grid tape prior to application of weatherproof membrane.

C. Flexible-Membrane Flashing: Cold-applied, fully self-adhering, self-healing, rubberized-asphalt and polyethylene-film composite sheet or tape and primer; EIFS manufacturer's standard or product recommended in writing by EIFS manufacturer.

D. Insulation Adhesive: EIFS manufacturer's standard formulation designed for indicated use; compatible with substrate; with VOC content of 50 g/L or less when calculated according to 40 CFR 59, Subpart D (EPA Method 24); and complying with the following:

1. Factory-mixed non-cementitious formulation designed for adhesive attachment of insulation to substrates of type indicated, as recommended by EIFS manufacturer.

E. Molded, Rigid Cellular Polystyrene Board Insulation: Comply with ASTM C 578, Type I; EIFS manufacturer's requirements; and EIMA's "EIMA Guideline Specification for Expanded Polystyrene (EPS) Insulation Board" for most stringent requirements for material performance and qualities of insulation, including dimensions and permissible variations, and the following:

1. Aging: Before cutting and shipping, age insulation in block form by air drying for not less than six weeks or by another method approved by EIMA that produces equivalent results.
2. Flame-Spread and Smoke-Developed Indexes: 25 and 450 or less, respectively, per ASTM E 84.
3. Dimensions: Provide insulation boards not more than 24 by 48 inches (610 by 1219 mm) and in thickness indicated, but not more than 4 inches (102 mm) thick or less than thickness allowed by ASTM C 1397.
4. Foam Shapes: Provide with profiles and dimensions indicated on Drawings.

F. Reinforcing Mesh: Balanced, alkali-resistant, open-weave, glass-fiber mesh treated for compatibility with other EIFS materials, made from continuous multiend strands with retained mesh tensile strength of not less than 120 lbf/in. (21 dN/cm) per ASTM E 2098; complying with ASTM D 578 and the following:

1. High-Impact Reinforcing Mesh: Not less than 15 oz./sq. yd. (509 g/sq. m).

2. Strip Reinforcing Mesh: Not less than 3.75 oz./sq. yd. (127 g/sq. m).
3. Detail Reinforcing Mesh: Not less than 4.0 oz./sq. yd. (136 g/sq. m).
4. Corner Reinforcing Mesh: Not less than 7.2 oz./sq. yd. (244 g/sq. m).

G. Waterproof Adhesive/Base-Coat Materials: EIFS manufacturer's standard waterproof formulation with VOC content of 50 g/L or less when calculated according to 40 CFR 59, Subpart D (EPA Method 24) complying with the following:

1. Job-combined formulation of manufacturer's standard polymer-emulsion adhesive and manufacturer's standard dry mix containing portland cement.

H. Primer: EIFS manufacturer's standard factory-mixed, elastomeric-polymer primer for preparing base-coat surface for application of finish coat.

I. Finish-Coat Materials: EIFS manufacturer's siliconized acrylic-based coating complying with the following:

1. Factory-mixed formulation of polymer-emulsion binder, colorfast mineral pigments, sound stone particles, and fillers.
2. Sealer: Manufacturer's waterproof, clear acrylic-based sealer for protecting finish coat.
3. Colors: To match existing.

J. Water: Potable.

K. Trim Accessories: Type as designated or required to suit conditions indicated and to comply with EIFS manufacturer's written instructions; manufactured from UV-stabilized PVC; and complying with ASTM D 1784, manufacturer's standard Cell Class for use intended, and ASTM C 1063.

1. Casing Bead: Prefabricated, one-piece type for attachment behind insulation, of depth required to suit thickness of coating and insulation, with face leg perforated for bonding to coating and back leg.
2. Drip Screed/Track: Prefabricated, one-piece type for attachment behind insulation with face leg extended to form a drip, of depth required to suit thickness of coating and insulation, with face leg perforated for bonding to coating and back leg.
3. Expansion Joint: Prefabricated, one-piece V profile; designed to relieve stress of movement.

2.3 ELASTOMERIC SEALANTS

A. Elastomeric Sealant Products: Provide EIFS manufacturer's listed and recommended chemically curing, elastomeric sealant that is compatible with joint fillers, joint substrates, and other related materials, and complies with requirements for products and testing indicated in ASTM C 1481 and with requirements in Division 07 Section "Joint Sealants" for products corresponding to description indicated below:

1. Single-component, nonsag, neutral-curing silicone sealant.
2. Provide sealants, used inside the weatherproofing system, with a VOC content of 250 g/L or less when calculated according to 40 CFR 59, Subpart D (EPA Method 24).

B. Sealant Color: As selected by Architect from manufacturer's full range.

2.4 MIXING

A. General: Comply with EIFS manufacturer's requirements for combining and mixing materials. Do not introduce admixtures, water, or other materials except as recommended by EIFS manufacturer. Mix materials in clean containers. Use materials within time period specified by EIFS manufacturer or discard.

PART 3 - EXECUTION

3.1 EXAMINATION

A. Examine substrates, areas, and conditions, with Installer present, for compliance with requirements for installation tolerances and other conditions affecting performance of EIFS.

B. Examine roof edges, wall framing, flashings, openings, substrates, and junctures at other construction for suitable conditions where EIFS will be installed.

C. Proceed with installation only after unsatisfactory conditions have been corrected.

1. Begin coating application only after surfaces are dry.
2. Application of coating indicates acceptance of surfaces and conditions.

3.2 PREPARATION

A. Protect contiguous work from moisture deterioration and soiling caused by application of EIFS. Provide temporary covering and other protection needed to prevent spattering of exterior finish coats on other work.

B. Protect EIFS, substrates, and wall construction behind them from inclement weather during installation. Prevent penetration of moisture behind EIFS and deterioration of substrates.

C. Prepare and clean substrates to comply with EIFS manufacturer's written instructions to obtain optimum bond between substrate and adhesive for insulation.

1. Concrete Substrates: Provide clean, dry, neutral-pH substrate for insulation installation. Verify suitability of substrate by performing bond and moisture tests recommended by EIFS manufacturer.

3.3 EIFS INSTALLATION, GENERAL

A. Comply with ASTM C 1397 and EIFS manufacturer's written instructions for installation of EIFS as applicable to each type of substrate indicated.

3.4 SUBSTRATE PROTECTION APPLICATION

A. Waterproof Air/Weathertight Membrane Coat: Apply over surfaces of sheathing and where indicated on drawings to protect substrates from degradation and provide weather resistant surface on sheathing in accordance with EIFS manufacturer's written instructions and details. Install grid tape over all joints in sheathing prior to application of weather resistant membrane coating.

B. Flexible-Membrane Flashing: Install over weather-resistive barrier, applied and lapped to shed water; seal at openings, penetrations, terminations, and where indicated by EIFS manufacturer's written instructions to protect wall assembly from degradation. Prime substrates, if required, and install flashing to comply with EIFS manufacturer's written instructions and details.

3.5 TRIM INSTALLATION

A. Trim: Apply trim accessories at perimeter of EIFS, at expansion joints, and elsewhere as indicated, according to EIFS manufacturer's written instructions. Coordinate with installation of insulation.

1. Drip Screed/Track: Use at bottom edges of EIFS unless otherwise indicated.
2. Expansion Joint: Use where indicated on Drawings.
3. Casing Bead: Use at other locations.

3.6 INSULATION INSTALLATION

A. Board Insulation: Adhesively attach insulation to substrate in compliance with ASTM C 1397, EIFS manufacturer's written instructions, and the following:

1. Apply adhesive to insulation by notched-trowel method with notches running vertically in a manner that results in coating the entire surface of sheathing with adhesive once insulation is adhered to sheathing. Apply adhesive to a thickness of not less than 1/4 inch (6.4 mm) for factory mixed and not less than 3/8 inch (9.6 mm) for field mixed, measured from surface of insulation before placement.
2. Press and slide insulation into place. Apply pressure over the entire surface of insulation to accomplish uniform contact, high initial grab, and overall level surface.
3. Allow adhered insulation to remain undisturbed for period recommended by EIFS manufacturer, but not less than 24 hours, before beginning rasping and sanding insulation, or applying base coat and reinforcing mesh.
4. Apply insulation over dry substrates in courses with long edges of boards oriented horizontally.
5. Begin first course of insulation from screed/track and work upward. Work from perimeter casing beads toward interior of panels if possible.
6. Stagger vertical joints of insulation boards in successive courses to produce running bond pattern. Locate joints so no piece of insulation is less than 12 inches (300 mm) wide or 6 inches (150 mm) high. Offset joints not less than 6 inches (150 mm) from corners of window and door openings and not less than 4 inches (100 mm) from aesthetic reveals.

    a. Adhesive Attachment: Offset joints of insulation not less than 6 inches (150 mm) from horizontal and 4 inches (100 mm) from vertical joints in sheathing.

7. Interlock ends at internal and external corners.
8. Abut insulation tightly at joints within and between each course to produce flush, continuously even surfaces without gaps or raised edges between boards. If gaps greater than 1/16 inch (1.6 mm) occur, fill with insulation cut to fit gaps exactly; insert insulation without using adhesive or other material.
9. Cut insulation to fit openings, corners, and projections precisely and to produce edges and shapes complying with details indicated.
10. Rasp or sand flush entire surface of insulation to remove irregularities projecting more than 1/32 inch (0.8 mm) from surface of insulation and to remove yellowed areas due to sun exposure; do not create depressions deeper than 1/16 inch (1.6 mm).
11. Cut aesthetic reveals in outside face of insulation with high-speed router and bit configured to produce grooves, rabbets, and other features that comply with profiles and locations indicated. Do not reduce insulation thickness at aesthetic reveals to less than 3/4 inch (19 mm).
12. Install foam shapes and attach to sheathing.
13. Interrupt insulation for expansion joints where indicated.
14. Form joints for sealant application by leaving gaps between adjoining insulation edges and between insulation edges and dissimilar adjoining surfaces. Make gaps wide enough to produce joint widths indicated after encapsulating joint substrates with base coat and reinforcing mesh.
15. After installing insulation and before applying reinforcing mesh, fully wrap board edges with strip reinforcing mesh. Cover edges of board and extend encapsulating mesh not less than 2-1/2 inches (64 mm) over front and back face unless otherwise indicated on Drawings.
16. Treat exposed edges of insulation as follows:

    a. Except for edges forming substrates of sealant joints, encapsulate with base coat, reinforcing mesh, and finish coat.
    b. Encapsulate edges forming substrates of sealant joints within EIFS or between EIFS and other work with base coat and reinforcing mesh.
    c. At edges trimmed by accessories, extend base coat, reinforcing mesh, and finish coat over face leg of accessories.

17. Coordinate installation of flashing and insulation to produce wall assembly that does not allow water to penetrate behind flashing and EIFS protective-coating lamina.

B. Expansion Joints: Install at locations indicated, where required by EIFS manufacturer, and as follows:

1. At expansion joints in substrates behind EIFS.
2. Where EIFS adjoin dissimilar substrates, materials, and construction, including other EIFS.
3. Where wall height or building shape changes.
4. Where EIFS manufacturer requires joints in long continuous elevations.

3.7 BASE-COAT INSTALLATION

A. Base Coat: Apply to exposed surfaces of insulation and foam shapes in minimum thickness recommended in writing by EIFS manufacturer, but not less than 1/16-inch (1.6-mm) dry-coat thickness.

B. Reinforcing Mesh: Embed type indicated below in wet base coat to produce wrinkle-free installation with mesh continuous at corners and overlapped not less than 2-1/2 inches (64 mm) or otherwise treated at joints to comply with ASTM C 1397 and EIFS manufacturer's written instructions. Do not lap reinforcing mesh within 8 inches (204 mm) of corners. Completely embed mesh, applying additional base-coat material if necessary, so reinforcing-mesh color and pattern are not visible.

1. Standard-impact reinforcing mesh at inside of parapet walls surfaces..
2. High-impact reinforcing mesh at all locations other that parapets noted above.

C. Additional Reinforcing Mesh: Apply strip reinforcing mesh around openings extending 4 inches (100 mm) beyond perimeter. Apply additional 9-by-12-inch (230-by-300-mm) strip reinforcing mesh diagonally at corners of openings (re-entrant corners). Apply 8-inch- (200-mm-) wide strip reinforcing mesh at both inside and outside corners unless base layer of mesh is lapped not less than 4 inches (100 mm) on each side of corners.

1. At aesthetic reveals, apply strip reinforcing mesh not less than 8 inches (200 mm) wide.
2. Embed strip reinforcing mesh in base coat before applying first layer of reinforcing mesh.

D. Foam Shapes: Fully embed reinforcing mesh in base coat.

3.8 FINISH-COAT INSTALLATION

A. Primer: Apply over dry base coat according to EIFS manufacturer's written instructions.

B. Finish Coat: Apply over drybase coat, maintaining a wet edge at all times for uniform appearance, in thickness required by EIFS manufacturer to produce a uniform finish of color and texture matching approved sample and free of cold joints, shadow lines, and texture variations.

1. Texture: Smooth to match existing.

C. Sealer Coat: Apply over dry finish coat, in number of coats and thickness required by EIFS manufacturer.

3.9 INSTALLATION OF JOINT SEALANTS

A. Prepare joints and apply sealants, of type and at locations indicated, to comply with applicable requirements in Division 07 Section "Joint Sealants" and in ASTM C 1481.

1. Apply joint sealants after base coat has cured but before applying finish coat.
2. Clean surfaces to receive sealants to comply with indicated requirements and EIFS manufacturer's written instructions.
3. Apply primer recommended in writing by sealant manufacturer for surfaces to be sealed.
4. Install sealant backing to control depth and configuration of sealant joint and to prevent sealant from adhering to back of joint.
5. Apply masking tape to protect areas adjacent to sealant joints. Remove tape immediately after tooling joints, without disturbing joint seal.

6. Recess sealant sufficiently from surface of EIFS so an additional sealant application, including cylindrical sealant backing, can be installed without protruding beyond EIFS surface.

3.10 FIELD QUALITY CONTROL

A. Special Inspections: Engage a qualified special inspector to perform the following special inspections:

1. According to ICC-ES AC219.

B. EIFS Tests and Inspections: For the following:

1. According to ICC-ES AC219.

C. Remove and replace EIFS where test results indicate that EIFS do not comply with specified requirements.

D. Prepare test and inspection reports.

3.11 CLEANING AND PROTECTION

A. Remove temporary covering and protection of other work. Promptly remove coating materials from window and door frames and other surfaces outside areas indicated to receive EIFS coatings.

END OF SECTION 072413

SECTION 075419 – POLYVINYL CHLORIDE (PVC) MEMBRANE ROOFING

PART 1 - GENERAL

1.1 SECTION INCLUDES

A. PVC Adhered membrane roofing system.

B. Cover board.

C. Roof insulation.

1.2 RELATED SECTIONS:

A. Division 05 Section "Steel Decking" for furnishing acoustical deck rib insulation.

B. Division 06 Section "Miscellaneous Rough Carpentry" for wood nailers, cants, curbs, and blocking [and for wood-based, structural-use roof deck panels].

C. Division 07 Section "Sheet Metal Flashing and Trim" for metal roof penetration flashings, flashings, and counterflashings.

D. Division 22 Section "Storm Drainage Piping Specialties" for roof drains.

1.3 REFERENCES

A. Roofing Terminology: Refer to the following publications for definitions of roofing work related terms used in this Section:

1. ASTM D 1079 “Terminology Relating to Roofing and Waterproofing.”
2. Glossary of NRCA's "The NRCA Roofing Manual."
3. Roof Consultants Institute “Glossary of Roofing Terms.”

B. Sheet Metal Terminology and Techniques: SMACNA “Architectural Sheet Metal Manual.”

1.4 PERFORMANCE REQUIREMENTS

A. General Performance: Installed membrane roofing and base flashings shall withstand specified uplift pressures, thermally induced movement, and exposure to weather without failure due to defective manufacture, fabrication, installation, or other defects in construction. Membrane roofing and base flashings shall remain watertight.

B. Material Compatibility: Provide roofing materials that are compatible with one another under conditions of service and application required, as demonstrated by membrane roofing manufacturer based on testing and field experience.

C. FM Approvals Listing: Provide membrane roofing, base flashings, and component materials that comply with requirements in FM Approvals 4450 and FM Approvals 4470 as part of a membrane roofing system, and that are listed in FM Approvals' "RoofNav" for Class 1 or noncombustible construction, as applicable. Identify materials with FM Approvals markings.

1. Fire/Windstorm Classification: Class 1A-90.
2. Hail Resistance: MH.

D. Energy Performance: Provide roofing system that is listed on the DOE's ENERGY STAR "Roof Products Qualified Product List" for low-slope roof products.

1.5 SUBMITTALS

A. Product Data: Manufacturer’s product data sheets for each product to be provided.

B. Detail Drawings: Provide roofing system plans, elevations, sections, details, and details of attachment to other Work, including:

1. Base flashings, cants, and membrane terminations.
2. Tapered insulation, including slopes.
3. Crickets, saddles, and tapered edge strips, including slopes.
4. Insulation fastening patterns.

C. Verification Samples: Provide for each product specified.

D. Installer Certificates: Signed by roofing system manufacturer certifying that Installer is approved, authorized, or licensed by manufacturer to install roofing system.

E. Maintenance Data: For roofing system to include in maintenance manuals.

F. Warranties: Sample of special warranties.

1.6 QUALITY ASSURANCE

A. Manufacturer Qualifications: A qualified manufacturer that is UL listed and FM Approvals approved for membrane roofing system identical to that used for this Project.

B. Installer Qualifications: An experienced, qualified firm that is approved, authorized, or licensed by membrane roofing system manufacturer to install manufacturer's product and that is eligible to receive manufacturer's special warranty and has completed a minimum of 5 projects of similar size and type to this project in the last 3 years and has been in continuous operation for 5 years or longer as a commercial roofing applicator.

C. Source Limitations: Obtain components including roof insulation fasteners for membrane roofing system from same manufacturer as membrane roofing or approved by membrane roofing manufacturer.

D. Exterior Fire-Test Exposure: ASTM E 108, Class A; for application and roof slopes indicated, as determined by testing identical membrane roofing materials by a qualified testing agency. Materials shall be identified with appropriate markings of applicable testing agency.

E. Preinstallation Roofing Conference: Conduct conference at [Project site.

1. Meet with Owner, Architect, Owner's insurer if applicable, testing and inspecting agency representative, roofing Installer, roofing system manufacturer's representative, deck Installer, and installers whose work interfaces with or affects roofing, including installers of roof accessories and roof-mounted equipment.
2. Review methods and procedures related to roofing installation, including manufacturer's written instructions.
3. Review and finalize construction schedule and verify availability of materials, Installer's personnel, equipment, and facilities needed to make progress and avoid delays.
4. Examine deck substrate conditions and finishes for compliance with requirements, including flatness and fastening.
5. Review structural loading limitations of roof deck during and after roofing.
6. Review base flashings, special roofing details, roof drainage, roof penetrations, equipment curbs, and condition of other construction that will affect roofing system.
7. Review governing regulations and requirements for insurance and certificates if applicable.
8. Review temporary protection requirements for roofing system during and after installation.
9. Review roof observation and repair procedures after roofing installation.

1.7 DELIVERY, STORAGE, AND HANDLING

A. Deliver roofing materials to Project site in original containers with seals unbroken and labeled with manufacturer's name, product brand name and type, date of manufacture, approval or listing agency markings, and directions for storing and mixing with other components.

B. Store liquid materials in their original undamaged containers in a clean, dry, protected location and within the temperature range required by roofing system manufacturer. Protect stored liquid material from direct sunlight.

1. Discard and legally dispose of liquid material that cannot be applied within its stated shelf life.

C. Protect roof insulation materials from physical damage and from deterioration by sunlight, moisture, soiling, and other sources. Store in a dry location. Comply with insulation manufacturer's written instructions for handling, storing, and protecting during installation.

D. Handle and store roofing materials and place equipment in a manner to avoid permanent deflection of deck.

1.8 PROJECT CONDITIONS

A. Weather Limitations: Proceed with installation only when current and forecasted weather conditions permit roofing system to be installed in accordance with manufacturer's written instructions and guarantee requirements.

1.9 WARRANTY

A. Special Warranty: Manufacturer's standard or customized form, without monetary limitation, in which manufacturer agrees to repair or replace components of membrane roofing system that fail in materials or workmanship within specified warranty period.

1. Special warranty includes membrane roofing, base flashings, roof insulation, fasteners, cover boards, roofing accessories, and other components of membrane roofing system.
2. Warranty Period: 15 years from date of Substantial Completion.

B. Special Project Warranty: Submit roofing Installer's warranty, on warranty form at end of this Section, signed by Installer, covering the Work of this Section, including all components of membrane roofing system such as membrane roofing, base flashing, roof insulation, fasteners, cover boards, substrate boards, vapor retarders, roof pavers, and walkway products, for the following warranty period:

1. Warranty Period: Two years from date of Substantial Completion.

PART 2 - PRODUCTS

2.1 POLYVINYL-CHLORIDE ROOFING MEMBRANE - PVC

A. PVC Sheet: ASTM D 4434, Type III, fabric reinforced that contains KEE (Elvaloy) to reduce plasticizer migration. Basis of Design: Johns Mansville, Fully Adhered Reinforced, PVC Single Ply Roofing System

1. Certification, by letter, stating that the formulation has a minimum 20 years of performance history in North America.
2. Thickness: 80 mils (2.03 mm), minimum.
3. Fabric Fleece Backed
4. Exposed Face Color: White

2.2 AUXILIARY ROOFING MATERIALS – SINGLE PLY

A. General: Auxiliary materials recommended by roofing system manufacturer for intended use and compatible with membrane roofing.

1. Liquid-type auxiliary materials shall meet VOC limits of authorities having jurisdiction.

B. Sheet Flashing: Manufacturer's internally reinforced or scrim reinforced, smooth backed membrane with same thickness and color as sheet membrane.

C. Bonding Adhesive: Manufacturer's standard water-based bonding adhesive for membrane, and solvent-based bonding adhesive for base flashings.

D. Urethane Adhesive: Manufacturer's standard two component no VOC adhesive for fleece backed membranes.

E. Metal Termination Bars: Manufacturer's standard predrilled stainless-steel or aluminum bars, with anchors.

F. Fasteners: Factory-coated steel fasteners and metal or plastic plates meeting corrosion-resistance provisions in FMG 4470, designed for fastening membrane to substrate, and acceptable to membrane roofing system manufacturer.

G. Miscellaneous Accessories: Provide pourable sealers, preformed cone and vent sheet flashings, preformed inside and outside corner sheet flashings, T-joint covers, cover strips, sealants, and other accessories.

2.3 AUXILIARY ROOFING SYSTEM COMPONENTS

A. Expansion Joints: Provide factory fabricated weatherproof, exterior covers for expansion joint openings consisting of flexible rubber membrane, supported by a closed cell foam to form flexible bellows, with two metal flanges, adhesively and mechanically combined to the bellows by a bifurcation process. Provide product manufactured and marketed by single-source membrane supplier that is included in the No Dollar Limit guarantee.

B. Coping System: Manufacturer’s factory fabricated coping consisting of a base piece and a snap-on cap. Provide product manufactured and marketed by single-source membrane supplier that is included in the No Dollar Limit guarantee.

C. Metal Flashing Sheet: Metal flashing sheet is specified in Division 07 Section "Sheet Metal Flashing and Trim."

2.4 WALKWAYS AND SAFETY STRIPS

A. Flexible Walkways: Factory-formed, nonporous, heavy-duty, slip-resisting, surface-textured walkway pads sourced from membrane roofing system manufacturer.

B. Safety Strips: Manufacturer’s minimum 45 mils, reinforced, UV-resistant PVC (polyvinyl chloride) with Elvaloy KEE (ketone ethylene ester) safety warning line for roof perimeters.

1. Exposed Face Color: Yellow

2.5 COVER BOARD

A. Gypsum Board: ASTM C 1278, non-faced, gypsum and cellulose fiber substrate, 1/2 inch (16 mm) thick. Basis of Design: JM Securock Gypsum-Fiber Roof Board

2.6 ROOF INSULATION – DECK FLUTE FILLER

A. General: Preformed roof insulation boards that comply with requirements and referenced standards, selected from manufacturer's standard sizes and of thicknesses indicated.

B. Polyisocyanurate Board Insulation: ASTM C 1289, Type II, Class 1, Grade 2.

1. Provide metal roof flute filler insulation package with thickness to fill flutes the height of the standing seam.

2.7 ROOF INSULATION

A. General: Preformed roof insulation boards that comply with requirements and referenced standards, selected from manufacturer's standard sizes and of thicknesses indicated.

B. Polyisocyanurate Board Insulation: ASTM C 1289, Type II

2.8 ACCESSORIES

A. General: Roof insulation accessories recommended by insulation manufacturer for intended use and compatible with membrane roofing.

B. Provide factory preformed saddles, crickets, tapered edge strips, and other insulation shapes where indicated for sloping to drain. Fabricate to slopes indicated.

C. Fasteners: Factory-coated steel fasteners and metal or plastic plates meeting corrosion-resistance provisions in FMG 4470, designed for fastening roof insulation to substrate, and furnished by roofing system manufacturer.

PART 3 - EXECUTION

3.1 EXAMINATION

A. Examine substrates, areas, and conditions for compliance with the requirements affecting performance of roofing system.

1. General:
   a. Verify that roof openings and penetrations are in place and set and braced and that roof drains are securely clamped in place.
   b. Verify that wood cants, blocking, curbs, and nailers are securely anchored to roof deck at penetrations and terminations and that nailers match thicknesses of insulation.

2. Steel Decks:
   a. Verify that surface plane flatness and fastening of steel roof deck complies with requirements in Division 05 Section "Steel Decking."

B. Unacceptable panels should be brought to the attention of the General Contractor and Project Owner’s Representative and must be corrected prior to installation of roofing system.

C. Proceed with installation only after unsatisfactory conditions have been corrected.

3.2 PREPARATION

A. Clean and remove from substrate sharp projections, dust, debris, moisture, and other substances detrimental to roofing installation in accordance with roofing system manufacturer's written instructions.

B. Prevent materials from entering and clogging roof drains and conductors and from spilling or migrating onto surfaces of other construction.

C. Proceed with installation only after unsatisfactory conditions have been corrected.

3.3 FLUTE FILLER INSULATION INSTALLATION

A. Coordinate installation of roof system components so insulation is not exposed to precipitation or left exposed at the end of the workday.

B. Comply with roofing system manufacturer's written instructions for installing roof insulation.

C. Loose lay Polyisocyanurate flute filler insulation between the metal roof standing seams. Tightly butt insulation boards together.

D. Proceed with installation only after unsatisfactory conditions have been corrected.

3.4 INSULATION INSTALLATION

A. Coordinate installation of roof system components so insulation and cover board is not exposed to precipitation or left exposed at the end of the workday.

B. Comply with roofing system manufacturer's written instructions for installation of roof insulation and cover board.

C. Install tapered insulation under area of roofing to conform to slopes indicated.

D. Install insulation boards with long joints in a continuous straight line with end joints staggered between rows, abutting edges and ends between boards. Fill gaps exceeding 1/4 inch (6 mm) with like material.

E. Install 2 or more layers with joints of each succeeding layer staggered from joints of previous layer a minimum of 6 inches (150 mm) in each direction.

F. Trim surface of insulation boards where necessary at roof drains so completed surface is flush and does not restrict flow of water.

G. Install tapered edge strips at perimeter edges of roof that do not terminate at vertical surfaces.

H. Mechanically Fastened with Subsequent Layers Adhered Insulation: Secure first layer of insulation to deck using mechanical fasteners specifically designed and sized for fastening specified board-type to deck type.
   1. Fasten first layer to resist uplift pressure at corners, perimeter, and field of roof.

2. Install subsequent layers in a two-part urethane adhesive according to roofing system manufacturer’s instruction.
3. Install subsequent layers in a one-part urethane adhesive according to roofing system manufacturer’s instruction.
4. Install each layer to resist uplift pressure at corners, perimeter, and field of roof.

I. Proceed with installation only after unsatisfactory conditions have been corrected.

3.5 COVER BOARD INSTALLATION

A. Coordinate installing membrane roofing system components so cover board is not exposed to precipitation or left exposed at the end of the workday.

B. Comply with membrane roofing system manufacturer's written instructions for installing roof cover board.

C. Install cover board with long joints of cover board in a continuous straight line with end joints staggered between rows, abutting edges and ends between boards. Fill gaps exceeding 1/4 inch (6 mm) with cover board.

1. Cut and fit cover board within 1/4 inch (6 mm) of nailers, projections, and penetrations.

D. Trim surface of cover board where necessary at roof drains so completed surface is flush and does not restrict flow of water.

1. Install tapered edge strips at perimeter edges of roof that do not terminate at vertical surfaces.

E. Adhered Cover Board: Adhere cover board to substrate as follows:

1. Install each layer in a two-part urethane adhesive according to roofing system manufacturer’s instruction.
2. Install each layer in a one-part urethane adhesive according to roofing system manufacturer’s instruction.
3. Install to resist uplift pressure at corners, perimeter, and field of roof.

F. Mechanically Fastened Cover Board: Install each layer of cover board and secure to deck using mechanical fasteners specifically designed and sized for fastening specified board-type roof cover board to deck type.
1. Fasten to resist uplift pressure at corners, perimeter, and field of roof.

G. Proceed with installation only after unsatisfactory conditions have been corrected.

3.6 ROOFING MEMBRANE INSTALLATION, GENERAL

A. Install roofing membrane in accordance with roofing system manufacturer's written instructions, applicable recommendations of the roofing manufacturer and requirements in this Section.

B. Start installation of roofing membrane in presence of roofing system manufacturer's technical personnel.

C. Where roof slope exceeds 1/2 inch per 12 inches (1:24), contact the membrane manufacturer for installation instructions regarding installation direction and backnailing.

D. Cooperate with testing and inspecting agencies engaged or required to perform services for installing roofing system.

E. Coordinate installing roofing system so insulation and other components of the roofing membrane system not permanently exposed are not subjected to precipitation or left uncovered at the end of the workday or when rain is imminent.

1. Provide tie-offs at end of each day's work to cover exposed roofing membrane sheets and insulation with joints and edges sealed.
2. Complete terminations and base flashings and provide temporary seals to prevent water from entering completed sections of roofing system.
3. Remove and discard temporary seals before beginning work on adjoining roofing.

F. Proceed with installation only after unsatisfactory conditions have been corrected.

3.7 ADHERED ROOFING MEMBRANE INSTALLATION

A. Install roofing membrane over area to receive roofing in accordance with membrane roofing system manufacturer's written instructions.

1. Unroll roofing membrane and allow to relax before installing.
2. Install sheet in accordance with roofing system manufacturer’s written instructions.

B. Accurately align roofing membrane and maintain uniform side and end laps of minimum dimensions required by manufacturer. Stagger end laps.

C. Bonding Adhesive: Apply water-based bonding adhesive to substrate at rate required by manufacturer and immediately install roofing membrane. Do not apply bonding adhesive to splice area of roofing membrane.

D. Urethane Membrane Adhesive for fleece backed membranes: Apply 2-Part Urethane Adhesive substrate at rate required by manufacturer and install fleece-backed roofing membrane. Do not apply bonding adhesive to splice area of roofing membrane.

E. Mechanically fasten roofing membrane securely at terminations, penetrations, and perimeter of roofing.

F. Apply roofing membrane with side laps shingled with slope of roof deck where possible.

G. Seams: Clean seam areas, overlap roofing membrane, and hot-air weld side and end laps of roofing membrane according to manufacturer's written instructions to ensure a watertight seam installation.

1. Test lap edges with probe to verify seam weld continuity.
2. Verify field strength of seams a minimum of twice daily and repair seam sample areas.

a. Remove and repair any unsatisfactory sections before proceeding with Work.

3. Repair tears, voids, and lapped seams in roofing membrane that do not meet requirements.

H. Spread sealant or mastic bed over deck drain flange at deck drains and securely seal roofing membrane in place with clamping ring.

I. Install roofing membrane and auxiliary materials to tie in to existing roofing.

J. Proceed with installation only after unsatisfactory conditions have been corrected.

3.8 BASE FLASHING INSTALLATION

A. Install sheet flashings and preformed flashing accessories and adhere to substrates in accordance with membrane roofing system manufacturer's written instructions.

B. Apply solvent-based bonding adhesive at required rate and allow to partially dry. Do not apply bonding adhesive to seam area of flashing.

C. Flash penetrations and field-formed inside and outside corners per manufacturer’s installation instructions.

D. Clean seam areas and overlap and firmly roll sheet flashings into the adhesive. Weld side and end laps to ensure a watertight seam installation.

E. Terminate and seal top of sheet flashings and mechanically anchor to substrate through termination bars.

F. Proceed with installation only after unsatisfactory conditions have been corrected.

3.9 WALKWAY INSTALLATION

A. Flexible Walkways: Install walkway products in locations indicated. Heat-weld walkway products to substrate according to roofing system manufacturer's written instructions.

B. Proceed with installation only after unsatisfactory conditions have been corrected.

3.10 FIELD QUALITY CONTROL

A. Testing Agency: Owner will engage a qualified independent testing and inspecting agency to perform roof tests and inspections and to prepare test reports.

B. Final Roof Inspection: Arrange for roofing system manufacturer's Registered Roof Observer (RRO) to inspect roofing installation on completion and submit report to Architect.

1. Notify Architect or Owner 48 hours in advance of date and time of inspection.

C. Repair or remove and replace components of roofing system where test results or inspections indicate that they do not comply with specified requirements.

D. Additional testing and inspecting, at Contractor's expense, will be performed to determine compliance of replaced or additional work with specified requirements.

3.11 PROTECTION AND CLEANING

A. Protect roofing system from damage and wear during remainder of construction period.

B. Correct deficiencies in or remove roofing system that does not comply with requirements, repair substrates, and repair or reinstall roofing system to a condition free of damage and deterioration at time of Substantial Completion and according to warranty requirements.

C. Clean overspray and spillage from adjacent construction using cleaning agents and procedures recommended by manufacturer of affected construction.

END OF SECTION 075419

SECTION 076200 - SHEET METAL FLASHING AND TRIM

PART 1 - GENERAL

1.1 RELATED DOCUMENTS

A. Drawings and general provisions of the Contract, including General and Supplementary Conditions and Division 01 Specification Sections, apply to this Section.

1.2 SUMMARY

A. Section Includes:

1. Manufactured Products:

a. Manufactured reglets and counterflashing.

2. Formed Products:

a. Formed roof drainage sheet metal fabrications.
b. Formed low-slope roof sheet metal fabrications.
c. Formed wall sheet metal fabrications.

B. Related Sections:

1. Division 06 Section "Rough Carpentry" for wood nailers, curbs, and blocking.
2. Division 07 Section “Polyvinyl Chloride (PVC) Membrane Roofing” for installing sheet metal flashing and trim integral with membrane roofing.
3. Division 07 Section "Roof Specialties" for manufactured roof specialties not part of sheet metal flashing and trim.
4. Division 07 Section "Roof Accessories" for set-on-type curbs, equipment supports, roof hatches, vents, and other manufactured roof accessory units.
5. Division 07 Section "Expansion Control" for manufactured sheet metal expansion-joint covers.

1.3 PERFORMANCE REQUIREMENTS

A. General: Sheet metal flashing and trim assemblies as indicated shall withstand wind loads, structural movement, thermally induced movement, and exposure to weather without failure due to defective manufacture, fabrication, installation, or other defects in construction. Completed sheet metal flashing and trim shall not rattle, leak, or loosen, and shall remain watertight.

B. Fabricate and install roof edge flashing and copings capable of resisting the following forces according to recommendations in FMG Loss Prevention Data Sheet 1-49:
1. Wind Zone 1: For velocity pressures of 21 to 30 lbf/sq. ft. (1.00 to 1.44 kPa): 60-lbf/sq. ft. (2.87-kPa) perimeter uplift force, 90-lbf/sq. ft. (4.31-kPa) corner uplift force, and 30-lbf/sq. ft. (1.44-kPa) outward force.

C. Thermal Movements: Provide sheet metal flashing and trim that allows for thermal movements from ambient and surface temperature changes.

1. Temperature Change (Range): 120 deg F (67 deg C), ambient; 180 deg F (100 deg C)], material surfaces.

1.4 SUBMITTALS

A. Product Data: For each type of product indicated. Include construction details, material descriptions, dimensions of individual components and profiles, and finishes for each manufactured product and accessory.

B. Shop Drawings: Show fabrication and installation layouts of sheet metal flashing and trim, including plans, elevations, expansion-joint locations, and keyed details. Distinguish between shop- and field-assembled work. Include the following:

1. Identification of material, thickness, weight, and finish for each item and location in Project.
2. Details for forming sheet metal flashing and trim, including profiles, shapes, seams, and dimensions.
3. Details for joining, supporting, and securing sheet metal flashing and trim, including layout of fasteners, cleats, clips, and other attachments. Include pattern of seams.
4. Details of termination points and assemblies, including fixed points.
5. Details of edge conditions, including eaves, ridges, valleys, rakes, crickets, and counterflashings as applicable.
6. Details of special conditions.
7. Details of connections to adjoining work.

C. Samples for Initial Selection: For each type of sheet metal flashing, trim, and accessory indicated with factory-applied color finishes involving color selection.

D. Qualification Data: For qualified fabricator.

E. Maintenance Data: For sheet metal flashing, trim, and accessories to include in maintenance manuals.

1.5 QUALITY ASSURANCE

A. Fabricator Qualifications: Shop that employs skilled workers who custom fabricate sheet metal flashing and trim similar to that required for this Project and whose products have a record of successful in-service performance.

B. Sheet Metal Flashing and Trim Standard: Comply with SMACNA's "Architectural Sheet Metal Manual" unless more stringent requirements are specified or shown on Drawings.

C. Preinstallation Conference: Conduct conference at Project site.

1. Meet with Owner, Architect, Owner's insurer if applicable, Installer, and installers whose work interfaces with or affects sheet metal flashing and trim including installers of roofing materials, roof accessories, unit skylights, and roof-mounted equipment.
2. Review methods and procedures related to sheet metal flashing and trim.
3. Examine substrate conditions for compliance with requirements, including flatness and attachment to structural members.
4. Review special roof details, roof drainage, roof penetrations, equipment curbs, and condition of other construction that will affect sheet metal flashing.
5. Document proceedings, including corrective measures and actions required, and furnish copy of record to each participant.

1.6 DELIVERY, STORAGE, AND HANDLING

A. Do not store sheet metal flashing and trim materials in contact with other materials that might cause staining, denting, or other surface damage. Store sheet metal flashing and trim materials away from uncured concrete and masonry.

B. Protect strippable protective covering on sheet metal flashing and trim from exposure to sunlight and high humidity, except to the extent necessary for the period of sheet metal flashing and trim installation.

1.7 WARRANTY

A. Special Warranty on Finishes: Manufacturer's standard form in which manufacturer agrees to repair finish or replace sheet metal flashing and trim that shows evidence of deterioration of factory-applied finishes within specified warranty period.

1. Exposed Panel Finish: Deterioration includes, but is not limited to, the following:

a. Color fading more than 5 Hunter units when tested according to ASTM D 2244.
b. Chalking in excess of a No. 8 rating when tested according to ASTM D 4214.
c. Cracking, checking, peeling, or failure of paint to adhere to bare metal.

2. Finish Warranty Period: 20 years from date of Substantial Completion.

PART 2 - PRODUCTS

2.1 SHEET METALS

A. General: Protect mechanical and other finishes on exposed surfaces from damage by applying a strippable, temporary protective film before shipping.

B. Metallic-Coated Steel Sheet: Restricted flatness steel sheet, metallic coated by the hot-dip process and prepainted by the coil-coating process to comply with ASTM A 755/A 755M.

1. Zinc-Coated (Galvanized) Steel Sheet: ASTM A 653/A 653M, G90 (Z275) coating designation; structural quality.
2. Surface: Smooth, flat.

3. Exposed Coil-Coated Finish:

   a. Two-Coat Fluoropolymer: AAMA 621. Fluoropolymer finish containing not less than 70 percent PVDF resin by weight in color coat. Prepare, pretreat, and apply coating to exposed metal surfaces to comply with coating and resin manufacturers' written instructions.

4. Color: As selected by Architect from manufacturer's full range.
5. Concealed Finish: Pretreat with manufacturer's standard white or light-colored acrylic or polyester backer finish, consisting of prime coat and wash coat with a minimum total dry film thickness of 0.5 mil (0.013 mm).

2.2 UNDERLAYMENT MATERIALS

A. Synthetic roof underlayment: TITANIUM UDL 25 as manufactured by InterWrap.

2.3 MISCELLANEOUS MATERIALS

A. General: Provide materials and types of fasteners, solder, welding rods, protective coatings, separators, sealants, and other miscellaneous items as required for complete sheet metal flashing and trim installation and recommended by manufacturer of primary sheet metal or manufactured item unless otherwise indicated.

B. Fasteners: Wood screws, annular threaded nails, self-tapping screws, self-locking rivets and bolts, and other suitable fasteners designed to withstand design loads and recommended by manufacturer of primary sheet metal or manufactured item].

   1. General: Blind fasteners or self-drilling screws, gasketed, with hex-washer head.

      a. Exposed Fasteners: Heads matching color of sheet metal using plastic caps or factory-applied coating.
      b. Blind Fasteners: High-strength aluminum or stainless-steel rivets suitable for metal being fastened.
      c. Spikes and Ferrules: Same material as gutter; with spike with ferrule matching internal gutter width.
   2. Fasteners for Zinc-Coated (Galvanized) Steel Sheet: Hot-dip galvanized steel according to ASTM A 153/A 153M or ASTM F 2329 or Series 300 stainless steel.

C. Solder:

   1. For Zinc-Coated (Galvanized) Steel: ASTM B 32, Grade Sn50, 50 percent tin and 50 percent lead or Grade Sn60, 60 percent tin and 40 percent lead.

D. Sealant Tape: Pressure-sensitive, 100 percent solids, gray polyisobutylene compound sealant tape with release-paper backing. Provide permanently elastic, nonsag, nontoxic, nonstaining tape 1/2 inch (13 mm) wide and 1/8 inch (3 mm) thick.

E. Elastomeric Sealant: ASTM C 920, elastomeric silicone polymer sealant; low modulus; of type, grade, class, and use classifications required to seal joints in sheet metal flashing and trim and remain watertight.

F. Butyl Sealant: ASTM C 1311, single-component, solvent-release butyl rubber sealant; polyisobutylene plasticized; heavy bodied for hooked-type expansion joints with limited movement.

G. Epoxy Seam Sealer: Two-part, noncorrosive, aluminum seam-cementing compound, recommended by aluminum manufacturer for exterior nonmoving joints, including riveted joints.

H. Bituminous Coating: Cold-applied asphalt emulsion complying with ASTM D 1187.

I. Asphalt Roofing Cement: ASTM D 4586, asbestos free, of consistency required for application.

2.4 MANUFACTURED SHEET METAL FLASHING AND TRIM

A. Reglets: Units of type, material, and profile indicated, formed to provide secure interlocking of separate reglet and counterflashing pieces, and compatible with flashing indicated with factory-mitered and -welded corners and junctions and with interlocking counterflashing on exterior face, of same metal as reglet.

1. Manufacturers: Subject to compliance with requirements, available manufacturers offering products that may be incorporated into the Work include, but are not limited to, the following:

   a. Cheney Flashing Company.
   b. Fry Reglet Corporation.
   c. Heckmann Building Products Inc.
   d. Hickman, W. P. Company.
   e. Hohmann & Barnard, Inc.; STF Sawtooth Flashing.
   f. Keystone Flashing Company, Inc.
   g. National Sheet Metal Systems, Inc.
   h. Sandell Manufacturing Company, Inc.

2. Material: Galvanized steel, 0.022 inch (0.56 mm) thick.
3. Surface-Mounted Type: Provide with slotted holes for fastening to substrate, with neoprene or other suitable weatherproofing washers, and with channel for sealant at top edge.
4. Accessories:
   a. Counterflashing Wind-Restraint Clips: Provide clips to be installed before counterflashing to prevent wind uplift of counterflashing lower edge.

5. Finish: With manufacturer's standard color coating.

2.5 FABRICATION, GENERAL

A. General: Custom fabricate sheet metal flashing and trim to comply with recommendations in SMACNA's "Architectural Sheet Metal Manual" that apply to design, dimensions, geometry, metal thickness, and other characteristics of item indicated. Fabricate items at the shop to greatest extent possible.

1. Fabricate sheet metal flashing and trim in thickness or weight needed to comply with performance requirements, but not less than that specified for each application and metal.
2. Obtain field measurements for accurate fit before shop fabrication.
3. Form sheet metal flashing and trim without excessive oil canning, buckling, and tool marks and true to line and levels indicated, with exposed edges folded back to form hems.
4. Conceal fasteners and expansion provisions where possible. Exposed fasteners are not allowed on faces exposed to view.

B. Fabrication Tolerances: Fabricate sheet metal flashing and trim that is capable of installation to a tolerance of 1/4 inch in 20 feet (6 mm in 6 m) on slope and location lines as indicated and within 1/8-inch (3-mm) offset of adjoining faces and of alignment of matching profiles.

C. Sealed Joints: Form nonexpansion but movable joints in metal to accommodate elastomeric sealant.

D. Expansion Provisions: Where lapped expansion provisions cannot be used, form expansion joints of intermeshing hooked flanges, not less than 1 inch (25 mm) deep, filled with butyl sealant concealed within joints.

E. Fabricate cleats and attachment devices of sizes as recommended by SMACNA's "Architectural Sheet Metal Manual" and by FMG Loss Prevention Data Sheet 1-49 for application, but not less than thickness of metal being secured.

F. Seams: Fabricate nonmoving seams with flat-lock seams. Form seams and seal with elastomeric sealant unless otherwise recommended by sealant manufacturer for intended use. Rivet joints where necessary for strength.

2.6 ROOF DRAINAGE SHEET METAL FABRICATIONS

A. Hanging Gutters: Fabricate to cross section indicated, complete with end pieces, outlet tubes, and other accessories as required. Fabricate in minimum 96-inch- (2400-mm-) long sections. Furnish flat-stock gutter spacers and gutter brackets fabricated from same metal as gutters, of size recommended by SMACNA but not less than twice the gutter thickness. Fabricate expansion joints, expansion-joint covers, gutter bead reinforcing bars, and gutter accessories from same metal as gutters.

1. Expansion Joints: Butt type with cover plate.
2. Gutters with Girth up to 15 Inches (380 mm): Fabricate from the following materials:

a. Prepainted, Metallic-Coated Steel: 0.0276 inch (0.7 mm) thick.

B. Downspouts: Fabricate rectangular downspouts complete with mitered elbows. Furnish with metal hangers, from same material as downspouts, and anchors.

1. Fabricate from the following materials:

a. Prepainted, Metallic-Coated Steel: 0.0276 inch (0.7 mm) thick.

C. Parapet Scuppers: Fabricate scuppers of dimensions required with closure flange trim to exterior, 4-inch- (100-mm-) wide wall flanges to interior, and base extending 4 inches (100 mm) beyond cant or tapered strip into field of roof. Fasten gravel guard angles to base of scupper. Fabricate from the following materials:

1. Prepainted, Metallic-Coated Steel: 0.0276 inch (0.7 mm) thick.

2.7 LOW-SLOPE ROOF SHEET METAL FABRICATIONS

A. Roof-Edge Flashing (Gravel Stop) and Fascia Cap: Fabricate in minimum 96-inch- (2400-mm-) long, but not exceeding 10-foot- (3-m-) long, sections. Furnish with 6-inch- (150-mm-) wide, joint cover plates.

1. Joint Style: Butt, with 12-inch- (300-mm-) wide, concealed backup plate.
2. Fabricate from the following materials:

a. Prepainted, Metallic-Coated Steel: 0.0276 inch (0.7 mm) thick..

B. Counterflashing: Fabricate from the following materials:

1. Galvanized Steel: 0.022 inch (0.56 mm) thick.

C. Roof-Penetration Flashing: Fabricate from the following materials:

1. Lead: 4.0 lb/sq. ft. (1.6 mm thick), hard tempered.

D. Roof-Drain Flashing: Fabricate from the following materials:

1. Lead: 4.0 lb/sq. ft. (1.6 mm thick), hard tempered.

E. Copings: Fabricate in minimum 96-inch- (2400-mm-) long, but not exceeding 12-foot- (3.6-m-) long, sections. Fabricate joint plates of same thickness as copings. Furnish with continuous cleats to support edge of external leg and interior leg. Miter corners, fasten and seal watertight. Shop fabricate interior and exterior corners.

1. Coping Profile: As indicated
2. Joint Style: Butted with expansion space and 6-inch- (150-mm-) wide, exposed cover plate.
3. Fabricate from the Following Materials:
   a. Galvanized Steel: 0.040 inch (1.02 mm) thick.
4. Finish: Factory Finish

PART 3 - EXECUTION

3.1 EXAMINATION

A. Examine substrates, areas, and conditions, with Installer present, to verify actual locations, dimensions and other conditions affecting performance of the Work.

1. Verify compliance with requirements for installation tolerances of substrates.
2. Verify that substrate is sound, dry, smooth, clean, sloped for drainage, and securely anchored.

B. Proceed with installation only after unsatisfactory conditions have been corrected.

3.2 UNDERLAYMENT INSTALLATION

A. General: Install underlayment as indicated on Drawings.

3.3 INSTALLATION, GENERAL

A. General: Anchor sheet metal flashing and trim and other components of the Work securely in place, with provisions for thermal and structural movement. Use fasteners, solder, welding rods, protective coatings, separators, sealants, and other miscellaneous items as required to complete sheet metal flashing and trim system.

1. Install sheet metal flashing and trim true to line and levels indicated. Provide uniform, neat seams with minimum exposure of solder, welds, and sealant.
2. Install sheet metal flashing and trim to fit substrates and to result in watertight performance. Verify shapes and dimensions of surfaces to be covered before fabricating sheet metal.
3. Space cleats not more than 12 inches (300 mm) apart. Anchor each cleat with two fasteners. Bend tabs over fasteners.
4. Install exposed sheet metal flashing and trim without excessive oil canning, buckling, and tool marks.
5. Install sealant tape where indicated.
6. Torch cutting of sheet metal flashing and trim is not permitted.
7. Do not use graphite pencils to mark metal surfaces.

B. Expansion Provisions: Provide for thermal expansion of exposed flashing and trim. Space movement joints at a maximum of 10 feet (3 m) with no joints allowed within 24 inches (600 mm) of corner or intersection. Where lapped expansion provisions cannot be used or would not be sufficiently watertight, form expansion joints of intermeshing hooked flanges, not less than 1 inch (25 mm) deep, filled with sealant concealed within joints.

C. Seal joints as shown and as required for watertight construction.

1. Where sealant-filled joints are used, embed hooked flanges of joint members not less than 1 inch (25 mm) into sealant. Form joints to completely conceal sealant. When ambient temperature at time of installation is moderate, between 40 and 70 deg F (4 and 21

deg C), set joint members for 50 percent movement each way. Adjust setting proportionately for installation at higher ambient temperatures. Do not install sealant-type joints at temperatures below 40 deg F (4 deg C).

2. Prepare joints and apply sealants to comply with requirements in Division 07 Section "Joint Sealants."

3.4 ROOF DRAINAGE SYSTEM INSTALLATION

A. General: Install sheet metal roof drainage items to produce complete roof drainage system according to SMACNA recommendations and as indicated. Coordinate installation of roof perimeter flashing with installation of roof drainage system.

B. Hanging Gutters: Join sections with riveted and soldered joints or with lapped joints sealed with sealant. Provide for thermal expansion. Attach gutters at eave or fascia to firmly anchored gutter brackets & straps spaced not more than 36 inches (900 mm) apart. Provide end closures and seal watertight with sealant. Slope to downspouts.

1. Fasten gutter spacers to front and back of gutter.
2. Loosely lock straps to front gutter bead and anchor to roof deck.
3. Anchor back of gutter that extends onto roof deck with cleats spaced not more than 24 inches (600 mm)] apart.
4. Install gutter with expansion joints at locations indicated, but not exceeding, 50 feet (15.24 m)] apart. Install expansion-joint caps.

C. Downspouts: Join sections with 1-1/2-inch (38-mm) telescoping joints.

1. Provide hangers with fasteners designed to hold downspouts securely to walls. Locate hangers at top and bottom and at approximately 60 inches (1500 mm) o.c. in between.
2. Provide elbows at base of downspout to direct water away from building.

D. Parapet Scuppers: Install scuppers where indicated through parapet. Continuously support scupper, set to correct elevation, and seal flanges to interior wall face, over cants or tapered edge strips, and under roofing membrane.

1. Anchor scupper closure trim flange to exterior wall and seal with elastomeric sealant to scupper.

E. Expansion-Joint Covers: Install expansion-joint covers at locations and of configuration indicated. Lap joints a minimum of 4 inches (100 mm) in direction of water flow.

3.5 ROOF FLASHING INSTALLATION

A. General: Install sheet metal flashing and trim to comply with performance requirements and SMACNA's "Architectural Sheet Metal Manual." Provide concealed fasteners where possible, set units true to line, and level as indicated. Install work with laps, joints, and seams that will be permanently watertight and weather resistant.

B. Roof Edge Flashing: Anchor to resist uplift and outward forces according to recommendations in SMACNA's "Architectural Sheet Metal Manual" and as indicated. Interlock bottom edge of

roof edge flashing with continuous cleat anchored to substrate at staggered 3-inch (75-mm) centers.

C. Pipe or Post Counterflashing: Install counterflashing with close-fitting collar with top edge flared for elastomeric sealant, extending a minimum of 4 inches (100 mm) over base flashing. Install stainless-steel draw band and tighten.

D. Counterflashing: Coordinate installation of counterflashing with installation of base flashing. Insert counterflashing in reglets or receivers and fit tightly to base flashing. Extend counterflashing 4 inches (100 mm) over base flashing. Lap counterflashing joints a minimum of 4 inches (100 mm) and bed with sealant. Secure in a waterproof manner by means of snap-in installation and sealant.

E. Roof-Penetration Flashing: Coordinate installation of roof-penetration flashing with installation of roofing and other items penetrating roof. Seal with elastomeric sealant and clamp flashing to pipes that penetrate roof.

3.6 ERECTION TOLERANCES

A. Installation Tolerances: Shim and align sheet metal flashing and trim within installed tolerance of 1/4 inch in 20 feet (6 mm in 6 m) on slope and location lines as indicated and within 1/8-inch (3-mm) offset of adjoining faces and of alignment of matching profiles.

3.7 CLEANING AND PROTECTION

A. Clean exposed metal surfaces of substances that interfere with uniform oxidation and weathering.

B. Clean off excess sealants.

C. Remove temporary protective coverings and strippable films as sheet metal flashing and trim are installed unless otherwise indicated in manufacturer's written installation instructions. On completion of installation, remove unused materials and clean finished surfaces. Maintain in a clean condition during construction.

D. Replace sheet metal flashing and trim that have been damaged or that have deteriorated beyond successful repair by finish touchup or similar minor repair procedures.

END OF SECTION 076200

SECTION 077200 - ROOF ACCESSORIES

PART 1 - GENERAL

1.1 RELATED DOCUMENTS

A. Drawings and general provisions of the Contract, including General and Supplementary Conditions and Division 01 Specification Sections, apply to this Section.

1.2 SUMMARY

A. This Section includes the following:

1. Roof hatches.

B. Related Sections include the following:

1. Division 05 Section "Metal Fabrications" for metal vertical ladders, ships' ladders, and stairs for access to roof hatches.
2. Division 07 low-slope roofing Sections for roofing accessories.
3. Division 07 Section "Sheet Metal Flashing and Trim" for shop- and field-fabricated metal flashing and counterflashing, roof expansion-joint covers, and miscellaneous sheet metal trim and accessories.
4. Division 07 Section "Roof Specialties" for fascia, copings, and gravel stops.
5. Division 07 Section "Manufactured Roof Expansion Joints" for manufactured roof expansion-joint covers.

1.3 SUBMITTALS

A. Product Data: For each type of roof accessory indicated. Include construction details, material descriptions, dimensions of individual components and profiles, and finishes.

B. Shop Drawings: Show fabrication and installation details for roof accessories. Show layouts of roof accessories including plans and elevations. Indicate dimensions, weights, loadings, required clearances, method of field assembly, and components. Include plans, elevations, sections, details, and attachments to other work.

C. Warranty: Special warranty specified in this Section.

1.4 QUALITY ASSURANCE

A. Sheet Metal Standard: Comply with SMACNA's "Architectural Sheet Metal Manual" details for fabrication of units, including flanges and cap flashing to coordinate with type of roofing indicated.

1.5 DELIVERY, STORAGE, AND HANDLING

A. Pack, handle, and ship roof accessories properly labeled in heavy-duty packaging to prevent damage.

1.6 PROJECT CONDITIONS

A. Field Measurements: Verify required openings for each type of roof accessory by field measurements before fabrication and indicate measurements on Shop Drawings.

1.7 COORDINATION

A. Coordinate layout and installation of roof accessories with roofing membrane and base flashing and interfacing and adjoining construction to provide a leakproof, weathertight, secure, and noncorrosive installation.

1. With Architect's approval, adjust location of roof accessories that would interrupt roof drainage routes and/or roof expansion joints.

1.8 WARRANTY

A. Special Warranty on Painted Finishes: Manufacturer's standard form in which manufacturer agrees to repair finish or replace roof accessories that show evidence of deterioration of factory-applied finishes within specified warranty period.

1. Fluoropolymer Finish: Deterioration includes, but is not limited to, the following:

a. Color fading more than 5 Hunter units when tested according to ASTM D 2244.
b. Chalking in excess of a No. 8 rating when tested according to ASTM D 4214.
c. Cracking, checking, peeling, or failure of paint to adhere to bare metal.

2. Finish Warranty Period: 20 years from date of Substantial Completion.

PART 2 - PRODUCTS

2.1 MANUFACTURERS

A. Available Manufacturers: Subject to compliance with requirements, manufacturers offering products that may be incorporated into the Work include, but are not limited to, manufacturers listed in other Part 2 articles.

2.2 METAL MATERIALS

A. Prepainted, Metallic-Coated Steel Sheet: Steel sheet metallic coated by hot-dip process and prepainted by coil-coating process to comply with ASTM A 755/A 755M.

1. Galvanized Steel Sheet: ASTM A 653/A 653M, G90 (Z275) coated.
2. Exposed Finishes: High-Performance Organic Finish (2-Coat Fluoropolymer): Prepare, pretreat, and apply coating to exposed metal surfaces to comply with coating and resin manufacturer's written instructions.

   a. Fluoropolymer 2-Coat System: Manufacturer's standard 2-coat, thermocured system consisting of specially formulated inhibitive primer and fluoropolymer color topcoat containing not less than 70 percent polyvinylidene fluoride resin by weight; complying with physical properties and coating performance requirements in AAMA 2604, except as modified below:

      1) Humidity Resistance: 1000 hours.
      2) Salt-Spray Resistance: 1000 hours.

B. Steel Shapes: ASTM A 36/A 36M, hot-dip galvanized to comply with ASTM A 123/A 123M, unless otherwise indicated.

C. Steel Tube: ASTM A 500, round tube, baked-enamel finished.

D. Galvanized Steel Tube: ASTM A 500, round tube, hot-dip galvanized to comply with ASTM A 123/A 123M.

E. Galvanized Steel Pipe: ASTM A 53/A 53M.

2.3 MISCELLANEOUS MATERIALS

A. Glass-Fiber Board Insulation: ASTM C 726, 1 inch (25 mm) thick.

B. Polyisocyanurate Board Insulation: ASTM C 1289, 1 inch (25 mm) thick.

C. Bituminous Coating: Cold-applied asphalt mastic, SSPC-Paint 12, compounded for 15-mil (0.4-mm) dry film thickness per coat. Provide inert-type noncorrosive compound free of asbestos fibers, sulfur components, and other deleterious impurities.

D. Fasteners: Same metal as metals being fastened, or nonmagnetic stainless steel or other noncorrosive metal as recommended by roof accessory manufacturer. Match finish of exposed fasteners with finish of material being fastened. Provide nonremovable fastener heads to exterior exposed fasteners.

E. Gaskets: Manufacturer's standard tubular or fingered design of neoprene, EPDM, or PVC; or flat design of foam rubber, sponge neoprene, or cork.

F. Elastomeric Sealant: ASTM C 920, silicone sealant; of type, grade, class, and use classifications required to seal joints in sheet metal flashing and trim and remain watertight.

G. Roofing Cement: ASTM D 4586, nonasbestos, fibrated asphalt cement designed for trowel application or other adhesive compatible with roofing system.

2.4 ROOF HATCHES

A. Roof Hatches: Fabricate roof hatches with insulated double-wall lids and insulated double-wall curb frame with integral deck mounting flange and lid frame counterflashing. Fabricate with welded or mechanically fastened and sealed corner joints. Provide continuous weathertight perimeter gasketing and equip with corrosion-resistant or hot-dip galvanized hardware.

1. Available Manufacturers:

   a. Babcock-Davis; a Cierra Products Inc. Company.
   b. Bilco Company (The).
   c. Bristolite Skylights.
   d. Custom Curb, Inc.
   e. Dur-Red Products.
   f. Hi Pro International, Inc.
   g. J. L. Industries, Inc.
   h. Metallic Products Corporation.
   i. Milcor Inc.; a Gibraltar Company.
   j. Nystrom, Inc.
   k. O'Keeffe's Inc.
   l. Precision Ladders, LLC.
   m. Roof Products & Systems Corporation.
   n. ThyCurb; Div of Thybar Corporation.
   o. Wasco Products, Inc.
   p. Western Canwell.

2. Loads: Fabricate roof hatches to withstand Insert load external and 20-lbf/sq. ft. (0.95-kPa) internal loads.
3. Type and Size: Single-leaf lid, 36” x 36”.
4. Curb and Lid Material: Galvanized steel sheet, 0.079 inch (2.0 mm) thick.

   a. Finish: High-performance organic coating.

5. Insulation: Glass-fiber board.
6. Interior Lid Liner: Manufacturer's standard metal liner of same material and finish as outer metal lid.
7. Exterior Curb Liner: Manufacturer's standard metal liner of same material and finish as metal curb.
8. Fabricate units to minimum height of 12 inches (300 mm), unless otherwise indicated.
9. Hardware: Galvanized steel spring latch with turn handles, butt- or pintle-type hinge system, and padlock hasps inside and outside.

   a. Provide 2-point latch on covers larger than 84 inches (2130 mm).

10. Ladder Safety Post: Manufacturer's standard ladder safety post. Post to lock in place on full extension. Provide release mechanism to return post to closed position.

    a. Height: 42 inches (1060 mm) above finished roof deck.
    b. Material and Finish: Steel tube, baked enameled.
    c. Diameter: Pipe with 1-5/8-inch (41-mm) OD tube.

11. Safety Railing System: Manufacturer's standard complete system including rails, clamps, fasteners, safety barrier at railing opening, and all accessories required for a complete installation.

    a. Height: 42 inches (1060 mm) above finished roof deck.
    b. Pipe or Tube: 1-1/4-inch (31-mm) ID galvanized pipe or 1-5/8-inch (41-mm) OD galvanized tube.
    c. Flat Bar: 2-inch- (50-mm-) high by 3/8-inch- (9-mm-) thick galvanized steel.
    d. Chain Passway Enclosure: Galvanized proof coil chain with quick link on fixed end.
    e. Pipe Ends and Tops: Covered or plugged with weather-resistant material.
    f. Provide weep holes or another means to drain entrapped water in hollow sections of handrail and railing members that are exposed to exterior or to moisture from condensation or other sources.
    g. Fabricate joints that will be exposed to weather in a watertight manner.
    h. Close exposed ends of handrail and railing members with prefabricated end fittings.
    i. Fasteners: Manufacturer's standard.

PART 3 - EXECUTION

3.1 EXAMINATION

A. Examine substrates, areas, and conditions, with Installer present, to verify actual locations, dimensions, and other conditions affecting performance of work.

    1. Verify that substrate is sound, dry, smooth, clean, sloped for drainage, and securely anchored and is ready to receive roof accessories.
    2. Verify dimensions of roof openings for roof accessories.
    3. Proceed with installation only after unsatisfactory conditions have been corrected.

3.2 INSTALLATION

A. General: Install roof accessories according to manufacturer's written instructions. Anchor roof accessories securely in place and capable of resisting forces specified. Use fasteners, separators, sealants, and other miscellaneous items as required for completing roof accessory installation. Install roof accessories to resist exposure to weather without failing, rattling, leaking, and fastener disengagement.

B. Install roof accessories to fit substrates and to result in watertight performance.

C. Metal Protection: Where dissimilar metals will contact each other or corrosive substrates, protect against galvanic action by painting contact surfaces with bituminous coating or by other permanent separation as recommended by manufacturer.

    1. Bed flanges in thick coat of asphalt roofing cement where required by roof accessory manufacturers for waterproof performance.

D. Install roof accessories level, plumb, true to line and elevation, and without warping, jogs in alignment, excessive oil canning, buckling, or tool marks.

E. Roof Hatch Installation:

1. Check roof hatch for proper operation. Adjust operating mechanism as required. Clean and lubricate joints and hardware.
2. Attach safety railing system to roof hatch curb.
3. Attach ladder safety post according to manufacturer's written instructions.

3.3 TOUCH UP

A. Touch up factory-primed surfaces with compatible primer ready for field painting in accordance with Division 09 painting Sections.

B. Galvanized Surfaces: Clean field welds, bolted connections, and abraded areas and repair galvanizing to comply with ASTM A 780.

3.4 CLEANING

A. Clean exposed surfaces according to manufacturer's written instructions.

END OF SECTION 077200

SECTION 078100 - APPLIED FIREPROOFING

PART 1 - GENERAL

1.1 RELATED DOCUMENTS

A. Drawings and general provisions of the Contract, including General and Supplementary Conditions and Division 01 Specification Sections, apply to this Section.

1.2 SUMMARY

A. Section includes sprayed fire-resistive materials (SFRM).

B. Related Requirements:

1. Section 078123 "Intumescent Fireproofing" for mastic and intumescent fire-resistive coatings.

1.3 PREINSTALLATION MEETINGS

A. Preinstallation Conference: Conduct conference at Project site.

1. Review products, design ratings, restrained and unrestrained conditions, densities, thicknesses, bond strengths, and other performance requirements.

1.4 ACTION SUBMITTALS

A. Product Data: For each type of product.

B. Shop Drawings: Framing plans, schedules, or both, indicating the following:

1. Extent of fireproofing for each construction and fire-resistance rating.
2. Applicable fire-resistance design designations of a qualified testing and inspecting agency acceptable to authorities having jurisdiction.
3. Minimum fireproofing thicknesses needed to achieve required fire-resistance rating of each structural component and assembly.
4. Treatment of fireproofing after application.

C. Samples: For each exposed product and for each color and texture specified, 4 inches (102 mm) square in size.

1.5 INFORMATIONAL SUBMITTALS

A. Qualification Data: For Installer.

B. Product Certificates: For each type of fireproofing.

C. Evaluation Reports: For fireproofing, from ICC-ES.

1.6 QUALITY ASSURANCE

A. Installer Qualifications: A firm or individual certified, licensed, or otherwise qualified by fireproofing manufacturer as experienced and with sufficient trained staff to install manufacturer's products according to specified requirements.

B. Mockups: Build mockups to verify selections made under Sample submittals and to demonstrate aesthetic effects and for preconstruction testing.

1. Build mockup of each type of fireproofing and different substrate as shown on Drawings.
2. Approval of mockups does not constitute approval of deviations from the Contract Documents contained in mockups unless Architect specifically approves such deviations in writing.
3. Subject to compliance with requirements, approved mockups may become part of the completed Work if undisturbed at time of Substantial Completion.

1.7 FIELD CONDITIONS

A. Environmental Limitations: Do not apply fireproofing when ambient or substrate temperature is 44 deg F (7 deg C) or lower unless temporary protection and heat are provided to maintain temperature at or above this level for 24 hours before, during, and for 24 hours after product application.

B. Ventilation: Ventilate building spaces during and after application of fireproofing, providing complete air exchanges according to manufacturer's written instructions. Use natural means or, if they are inadequate, forced-air circulation until fireproofing dries thoroughly.

PART 2 - PRODUCTS

2.1 MATERIALS, GENERAL

A. Assemblies: Provide fireproofing, including auxiliary materials, according to requirements of each fire-resistance design and manufacturer's written instructions.

B. Source Limitations: Obtain fireproofing from single source.

C. Fire-Resistance Design: Indicated on Drawings, tested according to ASTM E 119 or UL 263 by a qualified testing agency. Identify products with appropriate markings of applicable testing agency.

1. Steel members are to be considered restrained unless specifically noted otherwise.

D. Asbestos: Provide products containing no detectable asbestos.

2.2 SPRAYED FIRE-RESISTIVE MATERIALS

A. SFRM : Manufacturer's standard, factory-mixed, lightweight, dry formulation, complying with indicated fire-resistance design, and mixed with water at Project site to form a slurry or mortar before conveyance and application.

1. Products: Subject to compliance with requirements,available products that may be incorporated into the Work include, but are not limited to, the following:

   a. Carboline Company, subsidiary of RPM International, Fireproofing Products Div.; Pyrolite 15
   b. Grace, W. R. & Co. - Conn.; Grace Construction Products; Monokote MK-6 Series
   c. Isolatek International; Cafco 300.
   d. Southwest Fireproofing Products Co.; Type 5MD
2. Bond Strength: Minimum 150-lbf/sq. ft. (7.18-kPa) cohesive and adhesive strength based on field testing according to ASTM E 736.
3. Density: Not less than 15 lb/cu. ft. (240 kg/cu. m) for average and individual densities, or greater if required to attain fire-resistance ratings indicated as specified in the approved fire-resistance design, according to ASTM E 605.
4. Thickness: As required for fire-resistance design indicated, measured according to requirements of fire-resistance design or ASTM E 605, whichever is thicker, but not less than 0.375 inch (9 mm).
5. Combustion Characteristics: ASTM E 136.
6. Surface-Burning Characteristics: Comply with ASTM E 84; testing by a qualified testing agency. Identify products with appropriate markings of applicable testing agency.

   a. Flame-Spread Index: 0 or less.
   b. Smoke-Developed Index: 0 or less.

7. Compressive Strength: Minimum 1,200 lb/sq. ft according to ASTM E 761.
8. Corrosion Resistance: No evidence of corrosion according to ASTM E 937.
9. Deflection: No cracking, spalling, or delamination according to ASTM E 759.
10. Effect of Impact on Bonding: No cracking, spalling, or delamination according to ASTM E 760.
11. Air Erosion: Maximum weight loss of 0.025 g/sq. ft. (0.270 g/sq. m) in 24 hours according to ASTM E 859.
12. Fungal Resistance: Treat products with manufacturer's standard antimicrobial formulation to result in no growth on specimens per ASTM G 21 or rating of 10 according to ASTM D 3274 when tested according to ASTM D 3273.
13. Finish: Spray-textured finish

2.3 AUXILIARY MATERIALS

A. General: Provide auxiliary materials that are compatible with fireproofing and substrates and are approved by UL or another testing and inspecting agency acceptable to authorities having jurisdiction for use in fire-resistance designs indicated.

B. Substrate Primers: If required, primers approved by fireproofing manufacturer and complying with one or both of the following requirements:

1. Primer and substrate are identical to those tested in required fire-resistance design by UL or another testing and inspecting agency acceptable to authorities having jurisdiction.
2. Primer's bond strength in required fire-resistance design complies with specified bond strength for fireproofing and with requirements in UL's "Fire Resistance Directory" or in the listings of another qualified testing agency acceptable to authorities having jurisdiction, based on a series of bond tests according to ASTM E 736.

C. Bonding Agent: If required, product approved by fireproofing manufacturer and complying with requirements in UL's "Fire Resistance Directory" or in the listings of another qualified testing agency acceptable to authorities having jurisdiction.

PART 3 - EXECUTION

3.1 EXAMINATION

A. Examine substrates, areas, and conditions, with Installer present, for compliance with requirements for substrates and other conditions affecting performance of the Work and according to each fire-resistance design. Verify compliance with the following:

1. Substrates are free of dirt, oil, grease, release agents, rolling compounds, mill scale, loose scale, incompatible primers, paints, and encapsulants, or other foreign substances capable of impairing bond of fireproofing with substrates under conditions of normal use or fire exposure.
2. Objects penetrating fireproofing, including clips, hangers, support sleeves, and similar items, are securely attached to substrates.
3. Substrates receiving fireproofing are not obstructed by ducts, piping, equipment, or other suspended construction that will interfere with fireproofing application.

B. Verify that concrete work on steel deck has been completed before beginning fireproofing work.

C. Verify that roof construction, installation of roof-top HVAC equipment, and other related work is complete before beginning fireproofing work.

D. Conduct tests according to fireproofing manufacturer's written recommendations to verify that substrates are free of substances capable of interfering with bond.

E. Prepare written report, endorsed by Installer, listing conditions detrimental to performance of the Work.

F. Proceed with installation only after unsatisfactory conditions have been corrected.

3.2 PREPARATION

A. Cover other work subject to damage from fallout or overspray of fireproofing materials during application.

B. Clean substrates of substances that could impair bond of fireproofing.

C. Prime substrates where included in fire-resistance design and where recommended in writing by fireproofing manufacturer unless compatible shop primer has been applied and is in satisfactory condition to receive fireproofing.

D. For applications visible on completion of Project, repair substrates to remove surface imperfections that could affect uniformity of texture and thickness in finished surface of fireproofing. Remove minor projections and fill voids that would telegraph through fire-resistive products after application.

3.3 APPLICATION

A. Construct fireproofing assemblies that are identical to fire-resistance design indicated and products as specified, tested, and substantiated by test reports; for thickness, primers, sealers, topcoats, finishing, and other materials and procedures affecting fireproofing work.

B. Comply with fireproofing manufacturer's written instructions for mixing materials, application procedures, and types of equipment used to mix, convey, and apply fireproofing; as applicable to particular conditions of installation and as required to achieve fire-resistance ratings indicated.

C. Coordinate application of fireproofing with other construction to minimize need to cut or remove fireproofing.

1. Do not begin applying fireproofing until clips, hangers, supports, sleeves, and other items penetrating fireproofing are in place.
2. Defer installing ducts, piping, and other items that would interfere with applying fireproofing until application of fireproofing is completed.

D. Metal Decks:

1. Do not apply fireproofing to underside of metal deck substrates until concrete topping, if any, has been completed.
2. Do not apply fireproofing to underside of metal roof deck until roofing has been completed; prohibit roof traffic during application and drying of fireproofing.

E. Install auxiliary materials as required, as detailed, and according to fire-resistance design and fireproofing manufacturer's written recommendations for conditions of exposure and intended use. For auxiliary materials, use attachment and anchorage devices of type recommended in writing by fireproofing manufacturer.

F. Spray apply fireproofing to maximum extent possible. Following the spraying operation in each area, complete the coverage by trowel application or other placement method recommended in writing by fireproofing manufacturer.

G. Extend fireproofing in full thickness over entire area of each substrate to be protected.

H. Install body of fireproofing in a single course unless otherwise recommended in writing by fireproofing manufacturer.

I. Where sealers are used, apply products that are tinted to differentiate them from fireproofing over which they are applied.

J. Provide a uniform finish complying with description indicated for each type of fireproofing material and matching finish approved for required mockups.

K. Cure fireproofing according to fireproofing manufacturer's written recommendations.

L. Do not install enclosing or concealing construction until after fireproofing has been applied, inspected, and tested and corrections have been made to deficient applications.

M. Finishes: Where indicated, apply fireproofing to produce the following finishes:
1.
2. Spray-Textured Finish: Finish left as spray applied with no further treatment.

3.4 FIELD QUALITY CONTROL

A. Special Inspections: Engage a qualified special inspector to perform the following special inspections:

1. Test and inspect as required by the IBC, 1704.10.

B. Perform the tests and inspections of completed Work in successive stages. Do not proceed with application of fireproofing for the next area until test results for previously completed applications of fireproofing show compliance with requirements. Tested values must equal or exceed values as specified and as indicated and required for approved fire-resistance design.

C. Fireproofing will be considered defective if it does not pass tests and inspections.

1. Remove and replace fireproofing that does not pass tests and inspections, and retest.
2. Apply additional fireproofing, per manufacturer's written instructions, where test results indicate insufficient thickness, and retest.

D. Prepare test and inspection reports.

3.5 CLEANING, PROTECTING, AND REPAIRING

A. Cleaning: Immediately after completing spraying operations in each containable area of Project, remove material overspray and fallout from surfaces of other construction and clean exposed surfaces to remove evidence of soiling.

B. Protect fireproofing, according to advice of manufacturer and Installer, from damage resulting from construction operations or other causes, so fireproofing will be without damage or deterioration at time of Substantial Completion.

C. As installation of other construction proceeds, inspect fireproofing and repair damaged areas and fireproofing removed due to work of other trades.

D. Repair fireproofing damaged by other work before concealing it with other construction.

E. Repair fireproofing by reapplying it using same method as original installation or using manufacturer's recommended trowel-applied product.

END OF SECTION 078100

SECTION 078123 - INTUMESCENT FIREPROOFING

PART 1 - GENERAL

1.1 RELATED DOCUMENTS

A. Drawings and general provisions of the Contract, including General and Supplementary Conditions and Division 01 Specification Sections, apply to this Section.

1.2 SUMMARY

A. Section includes mastic and intumescent fire-resistive coatings (MIFRC).

B. Related Requirements:

1. Section 078100 "Applied Fireproofing" for sprayed fire-resistive materials (SFRM).

1.3 PREINSTALLATION MEETINGS

A. Preinstallation Conference: Conduct conference at Project site.

1. Review products, design ratings, restrained and unrestrained conditions, thicknesses, and other performance requirements.

1.4 ACTION SUBMITTALS

A. Product Data: For each type of product.

B. Shop Drawings: Structural framing plans indicating the following:

1. Extent of fireproofing for each construction and fire-resistance rating.
2. Applicable fire-resistance design designations of a qualified testing and inspecting agency acceptable to authorities having jurisdiction.
3. Minimum fireproofing thicknesses needed to achieve required fire-resistance rating of each structural component and assembly.
4. Treatment of fireproofing after application.

C. Samples: For each exposed product and for each color and texture specified, 4 inches (102 mm) square in size.

1.5 INFORMATIONAL SUBMITTALS

A. Qualification Data: For Installer and testing agency.

B. Product Certificates: For each type of fireproofing.

C. Evaluation Reports: For fireproofing, from ICC-ES.

1.6 QUALITY ASSURANCE

A. Installer Qualifications: A firm or individual certified, licensed, or otherwise qualified by fireproofing manufacturer as experienced and with sufficient trained staff to install manufacturer's products according to specified requirements.

B. Mockups: Provide mockups to verify selections made under Sample submittals and to demonstrate aesthetic effects and to set quality standards for materials and execution.
   1. Approval of mockups does not constitute approval of deviations from the Contract Documents contained in mockups unless Architect specifically approves such deviations in writing.
   2. Subject to compliance with requirements, approved mockups may become part of the completed Work if undisturbed at time of Substantial Completion.

1.7 FIELD CONDITIONS

A. Environmental Limitations: Do not apply fireproofing when ambient or substrate temperature is 50 deg F (10 deg C) or lower unless temporary protection and heat are provided to maintain temperature at or above this level for 24 hours before, during, and for 24 hours after product application.

B. Ventilation: Ventilate building spaces during and after application of fireproofing, providing complete air exchanges according to manufacturer's written instructions. Use natural means or, if they are inadequate, forced-air circulation until fireproofing dries thoroughly.

PART 2 - PRODUCTS

2.1 MATERIALS, GENERAL

A. Assemblies: Provide fireproofing, including auxiliary materials, according to requirements of each fire-resistance design and manufacturer's written instructions.

B. Source Limitations: Obtain fireproofing from single source.

C. Fire-Resistance Design: Indicated on Drawings, tested according to ASTM E 119 or UL 263 by a qualified testing agency. Identify products with appropriate markings of applicable testing agency.

   1. Steel members are to be considered restrained unless specifically noted otherwise.

D. Asbestos: Provide products containing no detectable asbestos.

2.2 MASTIC AND INTUMESCENT FIRE-RESISTIVE COATINGS

A. MIFRC: Manufacturer's standard, factory-mixed, multicomponent system consisting of intumescent base coat and topcoat, and complying with indicated fire-resistance design.

1. Products: Subject to compliance with requirements, available products that may be incorporated into the Work include, but are not limited to, the following:

a. Albi Manufacturing, Division of StanChem Inc.; Albi Clad TF.
b. Carboline Company, subsidiary of RPM International, Fireproofing Products Div.; Nullifire S607.
c. Isolatek International; Cafco SprayFilm-WB 5.

2. Application: Designated for "conditioned interior space purpose" use by a qualified testing agency acceptable to authorities having jurisdiction.
3. Thickness: As required for fire-resistance design indicated, measured according to requirements of fire-resistance design.
4. Surface-Burning Characteristics: Comply with ASTM E 84; testing by a qualified testing agency. Identify products with appropriate markings of applicable testing agency.

a. Flame-Spread Index: 25 or less.
b. Smoke-Developed Index: 50 or less.

5. Finish: Rolled or spray-textured finish.

a. Color and Gloss: As selected by Architect from manufacturer's full range

2.3 AUXILIARY MATERIALS

A. General: Provide auxiliary materials that are compatible with fireproofing and substrates and are approved by UL or another testing and inspecting agency acceptable to authorities having jurisdiction for use in fire-resistance designs indicated.

B. Substrate Primers: Primers approved by fireproofing manufacturer and complying with required fire-resistance design by UL or another testing and inspecting agency acceptable to authorities having jurisdiction.

C. Topcoat: Suitable for application over applied fireproofing; of type recommended in writing by fireproofing manufacturer for each fire-resistance design.

PART 3 - EXECUTION

3.1 EXAMINATION

A. Examine substrates, areas, and conditions, with Installer present, for compliance with requirements for substrates and other conditions affecting performance of the Work and according to each fire-resistance design. Verify compliance with the following:

1. Substrates are free of dirt, oil, grease, release agents, rolling compounds, mill scale, loose scale, incompatible primers, paints, and encapsulants, or other foreign substances capable

of impairing bond of fireproofing with substrates under conditions of normal use or fire exposure.

2. Objects penetrating fireproofing, including clips, hangers, support sleeves, and similar items, are securely attached to substrates.
3. Substrates receiving fireproofing are not obstructed by ducts, piping, equipment, or other suspended construction that will interfere with fireproofing application.

B. Conduct tests according to fireproofing manufacturer's written recommendations to verify that substrates are free of substances capable of interfering with bond.

C. Prepare written report, endorsed by Installer, listing conditions detrimental to performance of the Work.

D. Proceed with installation only after unsatisfactory conditions have been corrected.

3.2 PREPARATION

A. Cover other work subject to damage from fallout or overspray of fireproofing materials during application.

B. Clean substrates of substances that could impair bond of fireproofing.

C. Prime substrates where included in fire-resistance design and where recommended in writing by fireproofing manufacturer unless compatible shop primer has been applied and is in satisfactory condition to receive fireproofing.

D. For applications visible on completion of Project, repair substrates to remove surface imperfections that could affect uniformity of texture and thickness in finished surface of fireproofing. Remove minor projections and fill voids that would telegraph through fire-resistive products after application.

3.3 APPLICATION

A. Construct fireproofing assemblies that are identical to fire-resistance design indicated and products as specified, tested, and substantiated by test reports; for thickness, primers, topcoats, finishing, and other materials and procedures affecting fireproofing work.

B. Comply with fireproofing manufacturer's written instructions for mixing materials, application procedures, and types of equipment used to mix, convey, and apply fireproofing; as applicable to particular conditions of installation and as required to achieve fire-resistance ratings indicated.

C. Coordinate application of fireproofing with other construction to minimize need to cut or remove fireproofing.

1. Do not begin applying fireproofing until clips, hangers, supports, sleeves, and other items penetrating fireproofing are in place.
2. Defer installing ducts, piping, and other items that would interfere with applying fireproofing until application of fireproofing is completed.

D. Install auxiliary materials as required, as detailed, and according to fire-resistance design and fireproofing manufacturer's written recommendations for conditions of exposure and intended use. For auxiliary materials, use attachment and anchorage devices of type recommended in writing by fireproofing manufacturer.

E. Spray apply fireproofing to maximum extent possible. Following the spraying operation in each area, complete the coverage by trowel application or other placement method recommended in writing by fireproofing manufacturer.

F. Extend fireproofing in full thickness over entire area of each substrate to be protected.

G. Install body of fireproofing in a single course unless otherwise recommended in writing by fireproofing manufacturer.

H. Provide a uniform finish complying with description indicated for each type of fireproofing material and matching finish approved for required mockups.

I. Cure fireproofing according to fireproofing manufacturer's written recommendations.

J. Do not install enclosing or concealing construction until after fireproofing has been applied, inspected, and tested and corrections have been made to deficient applications.

K. Finishes: Where indicated, apply fireproofing to produce the following finishes:

1. Spray-Textured Finish: Finish left as spray applied with no further treatment.

3.4 FIELD QUALITY CONTROL

A. Special Inspections: Engage a qualified special inspector to perform the following special inspections:

1. Test and inspect as required by the IBC, 1704.11.

B. Perform the tests and inspections of completed Work in successive stages. Do not proceed with application of fireproofing for the next area until test results for previously completed applications of fireproofing show compliance with requirements. Tested values must equal or exceed values as specified and as indicated and required for approved fire-resistance design.

C. Fireproofing will be considered defective if it does not pass tests and inspections.

1. Remove and replace fireproofing that does not pass tests and inspections, and retest.
2. Apply additional fireproofing, per manufacturer's written instructions, where test results indicate insufficient thickness, and retest.

D. Prepare test and inspection reports.

3.5 CLEANING, PROTECTING, AND REPAIRING

A. Cleaning: Immediately after completing spraying operations in each containable area of Project, remove material overspray and fallout from surfaces of other construction and clean exposed surfaces to remove evidence of soiling.

B. Protect fireproofing, according to advice of manufacturer and Installer, from damage resulting from construction operations or other causes, so fireproofing will be without damage or deterioration at time of Substantial Completion.

C. As installation of other construction proceeds, inspect fireproofing and repair damaged areas and fireproofing removed due to work of other trades.

D. Repair fireproofing damaged by other work before concealing it with other construction.

E. Repair fireproofing by reapplying it using same method as original installation.

END OF SECTION 078123

SECTION 078446 - FIRE-RESISTIVE JOINT SYSTEMS

PART 1 - GENERAL

1.1 RELATED DOCUMENTS

A. Drawings and general provisions of the Contract, including General and Supplementary Conditions and Division 01 Specification Sections, apply to this Section.

1.2 SUMMARY

A. This Section includes fire-resistive joint systems for the following:

1. Floor-to-floor joints.
2. Head-of-wall joints.

B. Related Sections include the following:
1. Division 07 Section "Joint Sealants" for non-fire-resistive joint sealants.

1.3 PERFORMANCE REQUIREMENTS

A. General: Provide fire-resistive joint systems that are produced and installed to resist spread of fire according to requirements indicated, resist passage of smoke and other gases, and maintain original fire-resistance rating of assembly in which fire-resistive joint systems are installed.

B. Joint Systems in and between Fire-Resistance-Rated Constructions: Provide systems with assembly ratings equaling or exceeding the fire-resistance ratings of construction that they join, and with movement capabilities indicated as determined by UL 2079.

C. Perimeter Fire-Resistive Joint Systems: For joints between edges of fire-resistance-rated floor assemblies and exterior curtain walls, provide systems of type and with ratings indicated below and those indicated in the Fire-Resistive Joint System Schedule at the end of Part 3, as determined by NFPA 285 and UL 2079.

1. UL-Listed, Perimeter Fire-Containment Systems: Integrity ratings equaling or exceeding fire-resistance ratings of floor or floor/ceiling assembly forming one side of joint.

1.4 SUBMITTALS

A. Product Data: For each type of product indicated.

B. Shop Drawings: For each fire-resistive joint system, show each kind of construction condition in which joints are installed; also show relationships to adjoining construction. Include fire-resistive joint system design designation of testing and inspecting agency acceptable to authorities having jurisdiction that demonstrates compliance with requirements for each condition indicated.

1. Submit documentation, including illustrations, from a qualified testing and inspecting agency that is applicable to each fire-resistive joint system configuration for construction and penetrating items.

C. Qualification Data: For Installer.

1.5 QUALITY ASSURANCE

A. Installation Responsibility: Assign installation of through-penetration firestop systems and fire-resistive joint systems in Project to a single qualified installer.

B. Source Limitations: Obtain fire-resistive joint systems, for each kind of joint and construction condition indicated, through one source from a single manufacturer.

C. Fire-Test-Response Characteristics: Provide fire-resistive joint systems that comply with the following requirements and those specified in Part 1 "Performance Requirements" Article:

1. Fire-resistance tests are performed by a qualified testing and inspecting agency. A qualified testing and inspecting agency is UL or another agency performing testing and follow-up inspection services for fire-resistive joint systems acceptable to authorities having jurisdiction.
2. Fire-resistive joint systems are identical to those tested per methods indicated in Part 1 "Performance Requirements" Article and comply with the following:

a. Fire-resistive joint system products bear classification marking of qualified testing and inspecting agency.
b. Fire-resistive joint systems correspond to those indicated by referencing system designations of the qualified testing and inspecting agency.

1.6 DELIVERY, STORAGE, AND HANDLING

A. Deliver fire-resistive joint system products to Project site in original, unopened containers or packages with qualified testing and inspecting agency's classification marking applicable to Project and with intact and legible manufacturers' labels identifying product and manufacturer, date of manufacture, lot number, shelf life, curing time, and mixing instructions for multicomponent materials.

B. Store and handle materials for fire-resistive joint systems to prevent their deterioration or damage due to moisture, temperature changes, contaminants, or other causes.

1.7 PROJECT CONDITIONS

A. Environmental Limitations: Do not install fire-resistive joint systems when ambient or substrate temperatures are outside limits permitted by fire-resistive joint system manufacturers or when substrates are wet due to rain, frost, condensation, or other causes.

B. Ventilate fire-resistive joint systems per manufacturer's written instructions by natural means or, if this is inadequate, forced-air circulation.

1.8 COORDINATION

A. Coordinate construction of joints to ensure that fire-resistive joint systems are installed according to specified requirements.

B. Coordinate sizing of joints to accommodate fire-resistive joint systems.

C. Do not cover up fire-resistive joint system installations that will become concealed behind other construction until Owner's inspecting agency and building inspector of authorities having jurisdiction have examined each installation.

PART 2 - PRODUCTS

2.1 MANUFACTURERS

A. Available Products: Subject to compliance with requirements, fire-resistive joint systems that may be incorporated into the Work include, but are not limited to, those systems indicated in the Fire-Resistive Joint System Schedule at the end of Part 3.

2.2 FIRE-RESISTIVE JOINT SYSTEMS

A. Compatibility: Provide fire-resistive joint systems that are compatible with joint substrates, under conditions of service and application, as demonstrated by fire-resistive joint system manufacturer based on testing and field experience.

B. Accessories: Provide components of fire-resistive joint systems, including primers and forming materials, that are needed to install fill materials and to comply with Part 1 "Performance Requirements" Article. Use only components specified by fire-resistive joint system manufacturer and approved by the qualified testing and inspecting agency for systems indicated.

PART 3 - EXECUTION

3.1 EXAMINATION

A. Examine substrates and conditions, with Installer present, for compliance with requirements for joint configurations, substrates, and other conditions affecting performance of work.

1. Proceed with installation only after unsatisfactory conditions have been corrected.

3.2 PREPARATION

A. Surface Cleaning: Clean joints immediately before installing fire-resistive joint systems to comply with fire-resistive joint system manufacturer's written instructions and the following requirements:

1. Remove from surfaces of joint substrates foreign materials that could interfere with adhesion of fill materials.
2. Clean joint substrates to produce clean, sound surfaces capable of developing optimum bond with fill materials. Remove loose particles remaining from cleaning operation.
3. Remove laitance and form-release agents from concrete.

B. Priming: Prime substrates where recommended in writing by fire-resistive joint system manufacturer using that manufacturer's recommended products and methods. Confine primers to areas of bond; do not allow spillage and migration onto exposed surfaces.

C. Masking Tape: Use masking tape to prevent fill materials of fire-resistive joint system from contacting adjoining surfaces that will remain exposed on completion of Work and that would otherwise be permanently stained or damaged by such contact or by cleaning methods used to remove smears from fire-resistive joint system materials. Remove tape as soon as possible without disturbing fire-resistive joint system's seal with substrates or damaging adjoining surfaces.

3.3 INSTALLATION

A. General: Install fire-resistive joint systems to comply with Part 1 "Performance Requirements" Article and fire-resistive joint system manufacturer's written installation instructions for products and applications indicated.

B. Install forming/packing/backing materials and other accessories of types required to support fill materials during their application and in position needed to produce cross-sectional shapes and depths required to achieve fire ratings indicated.

C. Install fill materials for fire-resistive joint systems by proven techniques to produce the following results:

1. Fill voids and cavities formed by openings and forming/packing/backing materials as required to achieve fire-resistance ratings indicated.
2. Apply fill materials so they contact and adhere to substrates formed by joints.
3. For fill materials that will remain exposed after completing Work, finish to produce smooth, uniform surfaces that are flush with adjoining finishes.

3.4 CLEANING AND PROTECTING

A. Clean off excess fill materials adjacent to joints as Work progresses by methods and with cleaning materials that are approved in writing by fire-resistive joint system manufacturers and that do not damage materials in which openings occur.

B. Provide final protection and maintain conditions during and after installation that ensure fire-resistive joint systems are without damage or deterioration at time of Substantial Completion. If damage or deterioration occurs despite such protection, cut out and remove damaged or deteriorated fire-resistive joint systems immediately and install new materials to produce fire-resistive joint systems complying with specified requirements.

3.5 FIRE-RESISTIVE JOINT SYSTEM SCHEDULE

A. Designation System for Joints in or between Fire-Resistance-Rated Constructions: Alphanumeric systems listed in UL's "Fire Resistance Directory" under Product Category XHBN.

B. Designation System for Joints at the Intersection of Fire-Resistance-Rated Floor or Floor/Ceiling Assembly and an Exterior Curtain-Wall Assembly: Alphanumeric systems listed in UL's "Fire Resistance Directory" under Product Category XHDG:

C. Floor-to-Floor Fire-Resistive Joint Systems:

1. Available UL-Classified Systems: FF-D- 0009
2. Assembly Rating: 2 hours.
3. Nominal Joint Width: 1” or As indicated.
4. Movement Capabilities: Class I – 25 percent compression, extension, or horizontal shear.

D. Head-of-Wall Fire-Resistive Joint Systems:

1. Available UL-Classified Systems: HW-S-0008.
2. Assembly Rating: 1 hour.
3. Nominal Joint Width: As indicated.

E. Perimeter Fire-Resistive Joint Systems:

1. Available UL-Classified Perimeter Fire-Containment Systems: CW -S- 0000-9999.

a. Integrity Rating: 2 hours.
b. Linear Opening Width: As indicated, 1” maximum.
c. Movement Capabilities: Class II – 12 percent compression or extension.

END OF SECTION 078446

SECTION 079200 - JOINT SEALANTS

PART 1 - GENERAL

1.1 RELATED DOCUMENTS

A. Drawings and general provisions of the Contract, including General and Supplementary Conditions and Division 01 Specification Sections, apply to this Section.

1.2 SUMMARY

A. Section Includes:

1. Silicone joint sealants.
2. Latex joint sealants.
3. Urethane sealants
4. Acoustical joint sealants.

B. Related Sections:
1. Section 079500 "Expansion Control" for building expansion joints.
2. Section 078446 "Fire-Resistive Joint Systems" for sealing joints in fire-resistance-rated construction.
3. Section 088000 "Glazing" for glazing sealants.
4. Section 092900 "Gypsum Board" for sealing perimeter joints.
5. Section 095113 "Acoustical Panel Ceilings" and Section 095123 "Acoustical Tile Ceilings" for sealing edge moldings at perimeters with acoustical sealant.
6. Section 321313 "Cast in Place Site Concrete" for sealing joints in pavements, walkways, and curbing.

1.3 PRECONSTRUCTION TESTING
1. Testing will not be required if joint-sealant manufacturers submit joint preparation data that are based on previous testing, not older than 24 months, of sealant products for adhesion to, and compatibility with, joint substrates and other materials matching those submitted.

B. Preconstruction Field-Adhesion Testing: Before installing sealants, field test their adhesion to Project joint substrates as follows:

1. Locate test joints where indicated on Project or, if not indicated, as directed by Architect.
2. Conduct field tests for each application indicated below:

a. Each kind of sealant and joint substrate indicated.

3. Notify Architect seven days in advance of dates and times when test joints will be erected.

a. Test Method: Test joint sealants according to Method A, Field-Applied Sealant Joint Hand Pull Tab, in Appendix X1 in ASTM C 1193 or Method A, Tail Procedure, in ASTM C 1521.

1) For joints with dissimilar substrates, verify adhesion to each substrate separately; extend cut along one side, verifying adhesion to opposite side. Repeat procedure for opposite side.

4. Report whether sealant failed to adhere to joint substrates or tore cohesively. Include data on pull distance used to test each kind of product and joint substrate. For sealants that fail adhesively, retest until satisfactory adhesion is obtained.
5. Evaluation of Preconstruction Field-Adhesion-Test Results: Sealants not evidencing adhesive failure from testing, in absence of other indications of noncompliance with requirements, will be considered satisfactory. Do not use sealants that fail to adhere to joint substrates during testing.

1.4 ACTION SUBMITTALS

A. Product Data: For each joint-sealant product indicated.

B. Samples for Initial Selection: Manufacturer's color charts consisting of strips of cured sealants showing the full range of colors available for each product exposed to view.

C. Joint-Sealant Schedule: Include the following information:

1. Joint-sealant application, joint location, and designation.
2. Joint-sealant manufacturer and product name.
3. Joint-sealant formulation.
4. Joint-sealant color.

1.5 INFORMATIONAL SUBMITTALS

A. Qualification Data: For qualified Installer

B. Product Certificates: For each kind of joint sealant and accessory, from manufacturer.

C. Product Test Reports: Based on evaluation of comprehensive tests performed by a qualified testing agency, indicating that sealants comply with requirements.

D. Preconstruction Compatibility and Adhesion Test Reports: From sealant manufacturer, indicating the following:

1. Materials forming joint substrates and joint-sealant backings have been tested for compatibility and adhesion with joint sealants.
2. Interpretation of test results and written recommendations for primers and substrate preparation needed for adhesion.

E. Preconstruction Field-Adhesion Test Reports: Indicate which sealants and joint preparation methods resulted in optimum adhesion to joint substrates based on testing specified in "Preconstruction Testing" Article.

F. Field-Adhesion Test Reports: For each sealant application tested.

G. Warranties: Sample of special warranties.

1.6 QUALITY ASSURANCE

A. Installer Qualifications: Manufacturer's authorized representative who is trained and approved for installation of units required for this Project.

B. Source Limitations: Obtain each kind of joint sealant from single source from single manufacturer.

C. Mockups: Install sealant in mockups of assemblies specified in other Sections that are indicated to receive joint sealants specified in this Section. Use materials and installation methods specified in this Section.

D. Preinstallation Conference: Conduct conference at Project site.

1.7 PROJECT CONDITIONS

A. Do not proceed with installation of joint sealants under the following conditions:

1. When ambient and substrate temperature conditions are outside limits permitted by joint-sealant manufacturer or are below 40 deg F (5 deg C).
2. When joint substrates are wet.
3. Where joint widths are less than those allowed by joint-sealant manufacturer for applications indicated.
4. Where contaminants capable of interfering with adhesion have not yet been removed from joint substrates.

1.8 WARRANTY

A. Special Installer's Warranty: Manufacturer's standard form in which Installer agrees to repair or replace joint sealants that do not comply with performance and other requirements specified in this Section within specified warranty period.

1. Warranty Period: Two years from date of Substantial Completion.

B. Special Manufacturer's Warranty: Manufacturer's standard form in which joint-sealant manufacturer agrees to furnish joint sealants to repair or replace those that do not comply with performance and other requirements specified in this Section within specified warranty period.

1. Warranty Period: 2 years from date of Substantial Completion.

C. Special warranties specified in this article exclude deterioration or failure of joint sealants from the following:

1. Movement of the structure caused by structural settlement or errors attributable to design or construction resulting in stresses on the sealant exceeding sealant manufacturer's written specifications for sealant elongation and compression.
2. Disintegration of joint substrates from natural causes exceeding design specifications.
3. Mechanical damage caused by individuals, tools, or other outside agents.
4. Changes in sealant appearance caused by accumulation of dirt or other atmospheric contaminants.

PART 2 - PRODUCTS

2.1 MATERIALS, GENERAL

A. Compatibility: Provide joint sealants, backings, and other related materials that are compatible with one another and with joint substrates under conditions of service and application, as demonstrated by joint-sealant manufacturer, based on testing and field experience.

B. Stain-Test-Response Characteristics: Where sealants are specified to be nonstaining to porous substrates, provide products that have undergone testing according to ASTM C 1248 and have not stained porous joint substrates indicated for Project.

C. Suitability for Contact with Food: Where sealants are indicated for joints that will come in repeated contact with food, provide products that comply with 21 CFR 177.2600.

D. Colors of Exposed Joint Sealants: As selected by Architect from manufacturer's full range.

2.2 SILICONE JOINT SEALANTS

A. Single-Component, Nonsag, Neutral-Curing Silicone Joint Sealant: ASTM C 920, Type S, Grade NS, Class 50, for Use NT.

1. Products: Subject to compliance with requirements, available products that may be incorporated into the Work include, but are not limited to, the following:

a. BASF Building Systems; Omniseal 50.
b. Dow Corning Corporation; 795.
c. GE Advanced Materials - Silicones; [SilPruf NB SCS9000] [UltraPruf II SCS2900].
d. Pecora Corporation; [895] [898].
e. Sika Corporation, Construction Products Division; SikaSil-C995.

B. Mildew-Resistant, Single-Component, Nonsag, Neutral-Curing Silicone Joint Sealant: ASTM C 920, Type S, Grade NS, Class 25, for Use NT.

1. Products: Subject to compliance with requirements, available products that may be incorporated into the Work include, but are not limited to, the following:

a. Pecora Corporation; 898.

2.3 URETHANE JOINT SEALANTS

A. Multicomponent, Nonsag, Urethane Joint Sealant: ASTM C 920, Type M, Grade P, Class 25, for Use T,NT,M, G, A, O, I.

1. Products: Subject to compliance with requirements, available products that may be incorporated into the Work include, but are not limited to, the following:
   a. Sika Corporation, Construction Products Division; Sikaflex - 2c SL

   b. Pecora Corporation; Dynatrol II-SG
   c. Sonneborn; SL-2

2.4 LATEX JOINT SEALANTS

A. Latex Joint Sealant: Acrylic latex or siliconized acrylic latex, ASTM C 834, Type OP, Grade NF.

1. Products: Subject to compliance with requirements, available products that may be incorporated into the Work include, but are not limited to, the following:
   a. Bostik, Inc.; Chem-Calk 600.
   b. Pecora Corporation; AC-20+.
   c. Tremco Incorporated; Tremflex 834.

2.5 ACOUSTICAL JOINT SEALANTS

A. Acoustical Joint Sealant: Manufacturer's standard nonsag, paintable, nonstaining latex sealant complying with ASTM C 834. Product effectively reduces airborne sound transmission through perimeter joints and openings in building construction as demonstrated by testing representative assemblies according to ASTM E 90.

1. Products: Subject to compliance with requirements, available products that may be incorporated into the Work include, but are not limited to, the following:

   a. Pecora Corporation; AC-20 FTR.
   b. USG Corporation; SHEETROCK Acoustical Sealant.

2.6 JOINT SEALANT BACKING

A. General: Provide sealant backings of material that are nonstaining; are compatible with joint substrates, sealants, primers, and other joint fillers; and are approved for applications indicated by sealant manufacturer based on field experience and laboratory testing.

B. Cylindrical Sealant Backings: ASTM C 1330, Type C (closed-cell material with a surface skin) and of size and density to control sealant depth and otherwise contribute to producing optimum sealant performance.

C. Bond-Breaker Tape: Polyethylene tape or other plastic tape recommended by sealant manufacturer for preventing sealant from adhering to rigid, inflexible joint-filler materials or joint surfaces at back of joint. Provide self-adhesive tape where applicable.

2.7 MISCELLANEOUS MATERIALS

A. Primer: Material recommended by joint-sealant manufacturer where required for adhesion of sealant to joint substrates indicated, as determined from preconstruction joint-sealant-substrate tests and field tests.

B. Cleaners for Nonporous Surfaces: Chemical cleaners acceptable to manufacturers of sealants and sealant backing materials, free of oily residues or other substances capable of staining or harming joint substrates and adjacent nonporous surfaces in any way, and formulated to promote optimum adhesion of sealants to joint substrates.

C. Masking Tape: Nonstaining, nonabsorbent material compatible with joint sealants and surfaces adjacent to joints.

PART 3 - EXECUTION

3.1 EXAMINATION

A. Examine joints indicated to receive joint sealants, with Installer present, for compliance with requirements for joint configuration, installation tolerances, and other conditions affecting joint-sealant performance.

B. Proceed with installation only after unsatisfactory conditions have been corrected.

3.2 PREPARATION

A. Surface Cleaning of Joints: Clean out joints immediately before installing joint sealants to comply with joint-sealant manufacturer's written instructions and the following requirements:

1. Remove all foreign material from joint substrates that could interfere with adhesion of joint sealant, including dust, paints (except for permanent, protective coatings tested and approved for sealant adhesion and compatibility by sealant manufacturer), old joint sealants, oil, grease, waterproofing, water repellents, water, surface dirt, and frost.
2. Clean porous joint substrate surfaces by brushing, grinding, mechanical abrading, or a combination of these methods to produce a clean, sound substrate capable of developing optimum bond with joint sealants. Remove loose particles remaining after cleaning operations above by vacuuming or blowing out joints with oil-free compressed air. Porous joint substrates include the following:

   a. Concrete.
   b. Masonry.
   c. Unglazed surfaces of ceramic tile.
   d. Exterior insulation and finish systems.

3. Remove laitance and form-release agents from concrete.
4. Clean nonporous joint substrate surfaces with chemical cleaners or other means that do not stain, harm substrates, or leave residues capable of interfering with adhesion of joint sealants. Nonporous joint substrates include the following:

   a. Metal.
   b. Glass.
   c. Porcelain enamel.
   d. Glazed surfaces of ceramic tile.

B. Joint Priming: Prime joint substrates where recommended by joint-sealant manufacturer or as indicated by preconstruction joint-sealant-substrate tests or prior experience. Apply primer to comply with joint-sealant manufacturer's written instructions. Confine primers to areas of joint-sealant bond; do not allow spillage or migration onto adjoining surfaces.

C. Masking Tape: Use masking tape where required to prevent contact of sealant or primer with adjoining surfaces that otherwise would be permanently stained or damaged by such contact or by cleaning methods required to remove sealant smears. Remove tape immediately after tooling without disturbing joint seal.

3.3 INSTALLATION OF JOINT SEALANTS

A. General: Comply with joint-sealant manufacturer's written installation instructions for products and applications indicated, unless more stringent requirements apply.

B. Sealant Installation Standard: Comply with recommendations in ASTM C 1193 for use of joint sealants as applicable to materials, applications, and conditions indicated.

C. Install sealant backings of kind indicated to support sealants during application and at position required to produce cross-sectional shapes and depths of installed sealants relative to joint widths that allow optimum sealant movement capability.

   1. Do not leave gaps between ends of sealant backings.
   2. Do not stretch, twist, puncture, or tear sealant backings.
   3. Remove absorbent sealant backings that have become wet before sealant application and replace them with dry materials.

D. Install bond-breaker tape behind sealants where sealant backings are not used between sealants and backs of joints.

E. Install sealants using proven techniques that comply with the following and at the same time backings are installed:

   1. Place sealants so they directly contact and fully wet joint substrates.
   2. Completely fill recesses in each joint configuration.
   3. Produce uniform, cross-sectional shapes and depths relative to joint widths that allow optimum sealant movement capability.

F. Tooling of Nonsag Sealants: Immediately after sealant application and before skinning or curing begins, tool sealants according to requirements specified in subparagraphs below to form

smooth, uniform beads of configuration indicated; to eliminate air pockets; and to ensure contact and adhesion of sealant with sides of joint.

1. Remove excess sealant from surfaces adjacent to joints.
2. Use tooling agents that are approved in writing by sealant manufacturer and that do not discolor sealants or adjacent surfaces.
3. Provide concave joint profile per Figure 8A in ASTM C 1193, unless otherwise indicated.

G. Acoustical Sealant Installation: At sound-rated assemblies and elsewhere as indicated, seal construction at perimeters, behind control joints, and at openings and penetrations with a continuous bead of acoustical sealant. Install acoustical sealant at both faces of partitions at perimeters and through penetrations. Comply with ASTM C 919 and with manufacturer's written recommendations.

3.4 CLEANING

A. Clean off excess sealant or sealant smears adjacent to joints as the Work progresses by methods and with cleaning materials approved in writing by manufacturers of joint sealants and of products in which joints occur.

3.5 PROTECTION

A. Protect joint sealants during and after curing period from contact with contaminating substances and from damage resulting from construction operations or other causes so sealants are without deterioration or damage at time of Substantial Completion. If, despite such protection, damage or deterioration occurs, cut out and remove damaged or deteriorated joint sealants immediately so installations with repaired areas are indistinguishable from original work.

3.6 JOINT-SEALANT SCHEDULE

A. Joint-Sealant Application: Exterior joints in horizontal traffic surfaces.

1. Joint Locations:
   a. Isolation and contraction joints in cast-in-place concrete slabs.
2. Urethane Joint Sealant: Multicomponent, nonsag, traffic grade, Class 25.
3. Joint-Sealant Color: pre-cast concrete gray color

B. Joint-Sealant Application: Exterior joints in vertical surfaces and horizontal nontraffic surfaces.

1. Joint Locations:

   a. Expansion joints between pre-cast concrete wall panels and thin-shell wall panels.
   b. Construction joints in cast-in-place concrete
   c. Joints between plant-precast architectural concrete units.
   d. Control and expansion joints in unit masonry.
   e. Joints in glass unit masonry assemblies.
   f. Joints in exterior insulation and finish systems.

g. Joints between metal panels.
h. Joints between different materials listed above.
i. Perimeter joints between materials listed above and frames of doors, windows, and louvers.

2. Silicone Joint Sealant: Single component, nonsag, neutral curing, Class 50.
3. Joint-Sealant Color: As selected by Architect from manufacturer's full range of colors.

C. Joint-Sealant Application: Interior joints in horizontal traffic surfaces.

1. Joint Locations:

a. Isolation joints in cast-in-place concrete slabs.
b. Control and expansion joints in tile flooring.
c. Other joints as indicated.

2. Silicone Joint Sealant: Single component, nonsag, traffic grade, neutral curing
3. Joint-Sealant Color: As selected by Architect from manufacturer's full range of colors.

D. Joint-Sealant Application: Interior joints in vertical surfaces and horizontal nontraffic surfaces.

1. Joint Locations:

a. Control and expansion joints on exposed interior surfaces of exterior walls.
b. Perimeter joints of exterior openings where indicated.
c. Tile control and expansion joints.
d. Vertical joints on exposed surfaces of interior unit masonry concrete walls and partitions.
e. Perimeter joints between interior wall surfaces and frames of interior doors windows and elevator entrances.
f. Other joints as indicated.

2. Joint Sealant: Acrylic latex or siliconized acrylic latex .
3. Joint-Sealant Color: As selected by Architect from manufacturer's full range of colors.

E. Joint-Sealant Application: Mildew-resistant interior joints in vertical surfaces and horizontal nontraffic surfaces.

1. Joint Sealant Location:

a. Joints between plumbing fixtures and adjoining walls, floors, and counters.
b. Other joints as indicated.

2. Joint Sealant: Mildew resistant, single component, nonsag, neutral curing, Silicone
3. Joint-Sealant Color: White.

F. Joint-Sealant Application: Interior acoustical joints in vertical surfaces and horizontal nontraffic surfaces.

1. Joint Location:

a. Acoustical joints where indicated.

b. Other joints as indicated.

2. Joint Sealant: Acoustical.
3. Joint-Sealant Color: White.

END OF SECTION 079200

SECTION 079500 - EXPANSION CONTROL

PART 1 - GENERAL

1.1 RELATED DOCUMENTS

A. Drawings and general provisions of the Contract, including General and Supplementary Conditions and Division 01 Specification Sections, apply to this Section.

1.2 SUMMARY

A. This Section includes the following:

1. Architectural joint systems for building interiors.

B. Related Sections include the following:

1. Division 03 Section "Cast-in-Place Concrete" for cast-in architectural-joint-system frames furnished, but not installed, in this Section.
2. Division 07 Section "Manufactured Roof Expansion Joints" for factory-fabricated roof joint systems.
3. Division 07 Section "Joint Sealants" for liquid-applied joint sealants.

1.3 DEFINITIONS

A. Maximum Joint Width: Widest linear gap a joint system tolerates and in which it performs its designed function without damaging its functional capabilities.

B. Minimum Joint Width: Narrowest linear gap a joint system tolerates and in which it performs its designed function without damaging its functional capabilities.

C. Movement Capability: Value obtained from the difference between widest and narrowest widths of a joint opening typically expressed in numerical values (mm or inches) or a percentage (plus or minus) of nominal value of joint width.

D. Nominal Joint Width: The width of the linear opening specified in practice and in which the joint system is installed.

1.4 SUBMITTALS

A. Shop Drawings: Provide the following for each joint system specified:

1. Placement Drawings: Include line diagrams showing plans, elevations, sections, details, splices, blockout requirement, entire route of each joint system, and attachments to other work. Where joint systems change planes, provide isometric or clearly detailed drawing depicting how components interconnect.

2. Architectural Joint System Schedule: Prepared by or under the supervision of the supplier. Include the following information in tabular form:

   a. Manufacturer and model number for each joint system.
   b. Joint system location cross-referenced to Drawings.
   c. Nominal joint width.
   d. Movement capability.
   e. Classification as thermal or seismic.
   f. Materials, colors, and finishes.
   g. Product options.
   h. Fire-resistance ratings.

B. Samples for Initial Selection: For each type of joint system indicated.

   1. Include manufacturer's color charts showing the full range of colors and finishes available for each exposed metal and elastomeric seal material.

1.5 QUALITY ASSURANCE

A. Installer Qualifications: An employer of workers trained and approved by manufacturer.

B. Source Limitations: Obtain interior architectural joint systems through one source from a single manufacturer.

C. Product Options: Drawings indicate size, profiles, and dimensional requirements of architectural joint systems and are based on the specific systems indicated. Refer to Division 01 Section "Product Requirements."

D. Accessibility Requirements: Comply with applicable provisions in the U.S. Architectural & Transportation Barriers Compliance Board's "Americans with Disabilities Act (ADA), Accessibility Guidelines (ADAAG)".

E. Fire-Test-Response Characteristics: Where indicated, provide architectural joint system and fire-barrier assemblies identical to those of assemblies tested for fire resistance per UL 2079 or ASTM E 1966 by a testing and inspecting agency acceptable to authorities having jurisdiction.

PART 2 - PRODUCTS

2.1 MATERIALS

A. Aluminum: ASTM B 221 (ASTM B 221M), Alloy 6063-T5 for extrusions; ASTM B 209 (ASTM B 209M), Alloy 6061-T6 for sheet and plate.

   1. Apply manufacturer's standard protective coating on aluminum surfaces to be placed in contact with cementitious materials.
   2. Class II, Clear Anodic Finish: AA-M12C22A31 (Mechanical Finish: nonspecular as fabricated; Chemical Finish: etched, medium matte; Anodic Coating: Architectural Class II, clear coating 0.010 mm or thicker) complying with AAMA 611.

B. Elastomeric Seals: Preformed elastomeric membranes or extrusions to be installed in metal frames.

C. Compression Seals: ASTM E 1612; preformed rectangular elastomeric extrusions having internal baffle system and designed to function under compression.

D. Fire Barriers: Any material or material combination, when fire tested after cycling, designated to resist the passage of flame and hot gases through a movement joint and to meet performance criteria for required rating period.

E. Accessories: Manufacturer's standard anchors, clips, fasteners, set screws, spacers, and other accessories compatible with material in contact, as indicated or required for complete installations.

2.2 ARCHITECTURAL JOINT SYSTEMS, GENERAL

A. General: Provide architectural joint systems of design, basic profile, materials, and operation indicated. Provide units with capability to accommodate variations in adjacent surfaces.

1. Furnish units in longest practicable lengths to minimize field splicing. Install with hairline mitered corners where joint changes direction or abuts other materials.
2. Include factory-fabricated closure materials and transition pieces, tee-joints, corners, curbs, cross-connections, and other accessories as required to provide continuous joint systems.

B. Design architectural joint systems for the following size and movement characteristics:

1. Nominal Joint Width: As indicated on Drawings.
2. Movement Capability: Plus or minus 50 percent.
3. Type of Movement: Thermal.

2.3 ARCHITECTURAL JOINT SYSTEMS FOR BUILDING INTERIORS

A. Available Manufacturers: Subject to compliance with requirements, manufacturers offering products that may be incorporated into the Work include, but are not limited to, the following:

1. Architectural Art Mfg., Inc.
2. Balco, Inc.
3. Construction Specialties, Inc.
4. JointMaster/InPro Corporation.
5. Michael Rizza Company, LLC.
6. MM Systems Corporation.
7. Nystrom, Inc.
8. Watson Bowman Acme Corp.

B. Floor-to-Floor Joint Systems:

1. Type: Cover plate.

a. Exposed Metal: Aluminum.

1) Finish: Class I, clear anodic.
2) Finish: No. 2B.

b. Seal Material: Elastomertic .

1) Color: Black.

2. Cover-Plate Design: Serrated.

3. Attachment Method: Cast in.
4. Load Capacity: Heavy duty.

5. Fire-Resistance Rating: Provide joint system and fire-barrier assembly with a rating not less than 2 hours.

C. Wall-to-Wall Joint Systems:

1. Type: Snap-on cover.

a. Exposed Metal: Aluminum.

1) Finish: Class I, clear anodic.

2) Finish: No. 2B.

D. Ceiling-to-Ceiling Joint Systems:

1. Type: Accordion.

a. Exposed Metal: Aluminum.

1) Finish: Class I, clear anodic.

2) Finish: No. 2B.

b. Seal Material: PVC.

1) Color: Black.

2.4 FINISHES

A. Comply with NAAMM's "Metal Finishes Manual for Architectural and Metal Products" for recommendations for applying and designating finishes.

B. Protect mechanical finishes on exposed surfaces from damage by applying a strippable, temporary protective covering before shipping.

C. Appearance of Finished Work: Noticeable variations in same piece are not acceptable.

PART 3 - EXECUTION

3.1 EXAMINATION

A. Examine surfaces and blockouts where architectural joint systems will be installed for installation tolerances and other conditions affecting performance of work.

1. Proceed with installation only after unsatisfactory conditions have been corrected.

3.2 PREPARATION

A. Prepare substrates according to architectural joint system manufacturer's written instructions.

B. Repair concrete slabs and blockouts using manufacturer's recommended repair grout of compressive strength adequate for anticipated structural loadings.

C. Coordinate and furnish anchorages, setting drawings, and instructions for installing joint systems. Provide fasteners of metal, type, and size to suit type of construction indicated and to provide for secure attachment of joint systems.

D. Cast-In Frames: Coordinate and furnish frames to be cast into concrete.

3.3 INSTALLATION

A. Comply with manufacturer's written instructions for storing, handling, and installing architectural joint assemblies and materials unless more stringent requirements are indicated.

B. Metal Frames: Perform cutting, drilling, and fitting required to install joint systems.

1. Install in true alignment and proper relationship to joints and adjoining finished surfaces measured from established lines and levels.
2. Adjust for differences between actual structural gap and nominal design gap due to ambient temperature at time of installation. Notify Architect where discrepancies occur that will affect proper joint installation and performance.
3. Cut and fit ends to accommodate thermal expansion and contraction of metal without buckling of frames.
4. Locate in continuous contact with adjacent surfaces.
5. Heavy-Duty Systems: Repair or grout blockout as required for continuous frame support and to bring frame to proper level. Shimming is not allowed.
6. Locate anchors at interval recommended by manufacturer, but not less than 3 inches (75 mm) from each end and not more than 24 inches (600 mm) o.c.

C. Terminate exposed ends of joint assemblies with field- or factory-fabricated termination devices.

D. Fire-Resistance-Rated Assemblies: Coordinate installation of architectural joint assembly materials and associated work so complete assemblies comply with assembly performance requirements.

1. Fire Barriers: Install fire barriers to provide continuous, uninterrupted fire resistance throughout length of joint, including transitions and field splices.Q

3.4 PROTECTION

A. Do not remove protective covering until finish work in adjacent areas is complete. When protective covering is removed, clean exposed metal surfaces to comply with manufacturer's written instructions.

B. Protect the installation from damage by work of other Sections. Where necessary due to heavy construction traffic, remove and properly store cover plates or seals and install temporary protection over joints. Reinstall cover plates or seals prior to Substantial Completion of the Work.

END OF SECTION 079500

SECTION 081113 - HOLLOW METAL DOORS AND FRAMES

PART 1 - GENERAL

1.1 RELATED DOCUMENTS

A. Drawings and general provisions of the Contract, including General and Supplementary Conditions and Division 01 Specification Sections, apply to this Section.

1.2 SUMMARY

A. Section Includes:

1. Standard hollow metal doors and frames.
2. High Performance Acoustical Doors and Frames.

B. Related Sections:
1. Division 08 Section, “Door Hardware” for door hardware for hollow metal doors.
2. Division 09 Sections "Exterior Painting" and "Interior Painting" for field painting hollow metal doors and frames.

1.3 DEFINITIONS

A. Minimum Thickness: Minimum thickness of base metal without coatings.

B. Standard Hollow Metal Work: Hollow metal work fabricated according to ANSI/SDI A250.8.

1.4 SUBMITTALS

A. Product Data: For each type of product indicated. Include construction details, material descriptions, core descriptions, fire-resistance rating, and finishes.

B. Shop Drawings: Include the following:

1. Elevations of each door design.
2. Details of doors, including vertical and horizontal edge details and metal thicknesses.
3. Frame details for each frame type, including dimensioned profiles and metal thicknesses.
4. Locations of reinforcement and preparations for hardware.
5. Details of each different wall opening condition.
6. Details of anchorages, joints, field splices, and connections.
7. Details of accessories.
8. Details of moldings, removable stops, and glazing.

C. Other Action Submittals:

1. Schedule: Provide a schedule of hollow metal work prepared by or under the supervision of supplier, using same reference numbers for details and openings as those on Drawings. Coordinate with door hardware schedule.

1.5 QUALITY ASSURANCE

A. Source Limitations: Obtain hollow metal work from single source from single manufacturer.

B. Fire-Rated Door Assemblies: Assemblies complying with NFPA 80 that are listed and labeled by a qualified testing agency, for fire-protection ratings indicated, based on testing according to NFPA 252 or UL 10B.

1. Temperature-Rise Limit: At vertical exit enclosures and exit passageways, provide doors that have a maximum transmitted temperature end point of not more than 450 deg F (250 deg C) above ambient after 30 minutes of standard fire-test exposure.

C. Fire-Rated, Borrowed-Light Frame Assemblies: Assemblies complying with NFPA 80 that are listed and labeled, by a testing and inspecting agency acceptable to authorities having jurisdiction, for fire-protection ratings indicated, based on testing according to NFPA 257 or UL 9. Label each individual glazed lite.

1.6 DELIVERY, STORAGE, AND HANDLING

A. Deliver hollow metal work palletized, wrapped, or crated to provide protection during transit and Project-site storage. Do not use nonvented plastic.

B. Deliver welded frames with two removable spreader bars across bottom of frames, tack welded to jambs and mullions.

C. Store hollow metal work under cover at Project site. Place in stacks of five units maximum in a vertical position with heads up, spaced by blocking, on minimum 4-inch- (102-mm-) high wood blocking. Do not store in a manner that traps excess humidity.

1. Provide minimum 1/4-inch (6-mm) space between each stacked door to permit air circulation.

1.7 PROJECT CONDITIONS

A. Field Measurements: Verify actual dimensions of openings by field measurements before fabrication.

1.8 COORDINATION

A. Coordinate installation of anchorages for hollow metal frames. Furnish setting drawings, templates, and directions for installing anchorages, including sleeves, concrete inserts, anchor bolts, and items with integral anchors. Deliver such items to Project site in time for installation.

PART 2 - PRODUCTS

2.1 MANUFACTURERS

A. Manufacturers: Subject to compliance with requirements, available manufacturers offering products that may be incorporated into the Work include, but are not limited to, the following:

1. Amweld Building Products, LLC.
2. Benchmark; a division of Therma-Tru Corporation.
3. Ceco Door Products; an Assa Abloy Group company.
4. Curries Company; an Assa Abloy Group company.
5. Deansteel Manufacturing Company, Inc.
6. Firedoor Corporation.
7. Fleming Door Products Ltd.; an Assa Abloy Group company.
8. Habersham Metal Products Company.
9. Karpen Steel Custom Doors & Frames.
10. Pioneer Industries, Inc.
11. Security Metal Products Corp.
12. Steelcraft; an Ingersoll-Rand company.
13. Windsor Republic Doors.

2.2 MATERIALS

A. Cold-Rolled Steel Sheet: ASTM A 1008/A 1008M, Commercial Steel (CS), Type B; suitable for exposed applications.

B. Metallic-Coated Steel Sheet: ASTM A 653/A 653M, Commercial Steel (CS), Type B; with minimum A40 (ZF120) metallic coating.

C. Frame Anchors: ASTM A 591/A 591M, Commercial Steel (CS), 40Z (12G) coating designation; mill phosphatized.

1. For anchors built into exterior walls, steel sheet complying with ASTM A 1008/A 1008M or ASTM A 1011/A 1011M, hot-dip galvanized according to ASTM A 153/A 153M, Class B.

D. Inserts, Bolts, and Fasteners: Hot-dip galvanized according to ASTM A 153/A 153M.

E. Powder-Actuated Fasteners in Concrete: Fastener system of type suitable for application indicated, fabricated from corrosion-resistant materials, with clips or other accessory devices for attaching hollow metal frames of type indicated.

F. Grout: ASTM C 476, except with a maximum slump of 4 inches (102 mm), as measured according to ASTM C 143/C 143M.

G. Glazing: Comply with requirements in Division 08 Section "Glazing."

H. Bituminous Coating: Cold-applied asphalt mastic, SSPC-Paint 12, compounded for 15-mil (0.4-mm) dry film thickness per coat. Provide inert-type noncorrosive compound free of asbestos fibers, sulfur components, and other deleterious impurities.

2.3 STANDARD HOLLOW METAL DOORS

A. General: Provide doors of design indicated, not less than thickness indicated; fabricated with smooth surfaces, without visible joints or seams on exposed faces unless otherwise indicated. Comply with ANSI/SDI A250.8.

1. Design: Flush panel.
2. Core Construction: Manufacturer's standard kraft-paper honeycomb, polystyrene, polyurethane, polyisocyanurate, mineral-board, or vertical steel-stiffener core.

   a. Fire Door Core: As required to provide fire-protection and temperature-rise ratings indicated.

3. Vertical Edges for Single-Acting Doors: Manufacturer's standard.
4. Top and Bottom Edges: Closed with flush or inverted 0.042-inch- (1.0-mm-) thick, end closures or channels of same material as face sheets.
5. Tolerances: Comply with SDI 117, "Manufacturing Tolerances for Standard Steel Doors and Frames."

B. Exterior Doors: Face sheets fabricated from metallic-coated steel sheet. Provide doors complying with requirements indicated below by referencing ANSI/SDI A250.8 for level and model and ANSI/SDI A250.4 for physical performance level:

1. Level 3 and Physical Performance Level A (Extra Heavy Duty), Model 1 (Full Flush).

C. Interior Doors: Face sheets fabricated from cold-rolled steel sheet unless metallic-coated sheet is indicated. Provide doors complying with requirements indicated below by referencing ANSI/SDI A250.8 for level and model and ANSI/SDI A250.4 for physical performance level:

1. Level 3 and Physical Performance Level A (Extra Heavy Duty), Model 1 (Full Flush).

D. Hardware Reinforcement: Fabricate according to ANSI/SDI A250.6 with reinforcing plates from same material as door face sheets.

E. Fabricate concealed stiffeners and hardware reinforcement from either cold- or hot-rolled steel sheet.

2.4 STANDARD HOLLOW METAL FRAMES

A. General: Comply with ANSI/SDI A250.8 and with details indicated for type and profile.

B. Exterior Frames: Fabricated from metallic-coated steel sheet.

1. Fabricate frames with mitered or coped corners.
2. Fabricate frames as full profile welded unless otherwise indicated.
3. Frames for Level 3 Steel Doors: 0.053-inch- (1.3-mm-) thick steel sheet.

C. Interior Frames: Fabricated from cold-rolled steel sheet.

1. Fabricate frames with mitered or coped corners.
2. Fabricate frames as full profile welded unless otherwise indicated.
3. Frames for Level 3 Steel Doors: 0.053-inch- (1.3-mm-) thick steel sheet.
4. Frames for Borrowed Lights: 0.053-inch- (1.3-mm-) thick steel sheet or same as adjacent door frame.

D. Hardware Reinforcement: Fabricate according to ANSI/SDI A250.6 with reinforcement plates from same material as frames.

2.5 FRAME ANCHORS

A. Jamb Anchors:

1. Masonry Type: Adjustable strap-and-stirrup or T-shaped anchors to suit frame size, not less than 0.042 inch (1.0 mm) thick, with corrugated or perforated straps not less than 2 inches (50 mm) wide by 10 inches (250 mm) long; or wire anchors not less than 0.177 inch (4.5 mm) thick.
2. Stud-Wall Type: Designed to engage stud, welded to back of frames; not less than 0.042 inch (1.0 mm) thick.
3. Postinstalled Expansion Type for In-Place Concrete or Masonry: Minimum 3/8-inch- (9.5-mm-) diameter bolts with expansion shields or inserts. Provide pipe spacer from frame to wall, with throat reinforcement plate, welded to frame at each anchor location.

B. Floor Anchors: Formed from same material as frames, not less than 0.042 inch (1.0 mm) thick, and as follows:

1. Monolithic Concrete Slabs: Clip-type anchors, with two holes to receive fasteners.

2.6 STOPS AND MOLDINGS

A. Moldings for Glazed Lites in Doors: Minimum 0.032 inch (0.8 mm) thick, fabricated from same material as door face sheet in which they are installed.

B. Loose Stops for Glazed Lites in Frames: Minimum 0.032 inch (0.8 mm) thick, fabricated from same material as frames in which they are installed.

2.7 LOUVERS

A. Provide louvers for interior doors, where indicated, that comply with SDI 111C, with blades or baffles formed of 0.020-inch- ((0.5-mm-)) thick, cold-rolled steel sheet set into 0.032-inch- (0.8-mm-) thick steel frame.

2.8 ACCESSORIES

A. Mullions and Transom Bars: Join to adjacent members by welding or rigid mechanical anchors.

B. Ceiling Struts: Minimum 1/4-inch-thick by 1-inch- (6.4-mm-thick by 25.4-mm-) wide steel.

C. Grout Guards: Formed from same material as frames, not less than 0.016 inch (0.4 mm) thick.

2.9 FABRICATION

A. Fabricate hollow metal work to be rigid and free of defects, warp, or buckle. Accurately form metal to required sizes and profiles, with minimum radius for thickness of metal. Where practical, fit and assemble units in manufacturer's plant. To ensure proper assembly at Project site, clearly identify work that cannot be permanently factory assembled before shipment.

B. Tolerances: Fabricate hollow metal work to tolerances indicated in ANSI/NAAMM-HMMA 861.

C. Hollow Metal Doors:

1. Exterior Doors: Provide weep-hole openings in bottom of exterior doors to permit moisture to escape. Seal joints in top edges of doors against water penetration.
2. Glazed Lites: Factory cut openings in doors.
3. Astragals: Provide overlapping astragal on one leaf of pairs of doors where required by NFPA 80 for fire-performance rating or where indicated. Extend minimum 3/4 inch (19 mm) beyond edge of door on which astragal is mounted.

D. Hollow Metal Frames: Where frames are fabricated in sections due to shipping or handling limitations, provide alignment plates or angles at each joint, fabricated of same thickness metal as frames.

1. Welded Frames: Weld flush face joints continuously; grind, fill, dress, and make smooth, flush, and invisible.
2. Sidelight and Transom Bar Frames: Provide closed tubular members with no visible face seams or joints, fabricated from same material as door frame. Fasten members at crossings and to jambs by butt welding.
3. Provide countersunk, flat- or oval-head exposed screws and bolts for exposed fasteners unless otherwise indicated.
4. Grout Guards: Weld guards to frame at back of hardware mortises in frames to be grouted.
5. Floor Anchors: Weld anchors to bottom of jambs and mullions with at least four spot welds per anchor.
6. Jamb Anchors: Provide number and spacing of anchors as follows:

a. Masonry Type: Locate anchors not more than 18 inches (457 mm) from top and bottom of frame. Space anchors not more than 32 inches (813 mm) o.c. and as follows:

1) Four anchors per jamb from 90 to 120 inches (2286 to 3048 mm) high.
2) Four anchors per jamb plus 1 additional anchor per jamb for each 24 inches (610 mm) or fraction thereof above 120 inches (3048 mm) high.

b. Stud-Wall Type: Locate anchors not more than 18 inches (457 mm) from top and bottom of frame. Space anchors not more than 32 inches (813 mm) o.c. and as follows:

1) Five anchors per jamb from 90 to 96 inches (2286 to 2438 mm) high.
2) Five anchors per jamb plus 1 additional anchor per jamb for each 24 inches (610 mm) or fraction thereof above 96 inches (2438 mm) high.
3) Two anchors per head for frames above 42 inches (1066 mm) wide and mounted in metal-stud partitions.

c. Postinstalled Expansion Type: Locate anchors not more than 6 inches (152 mm) from top and bottom of frame. Space anchors not more than 26 inches (660 mm) o.c.

7. Door Silencers: Except on weather-stripped doors, drill stops to receive door silencers as follows. Keep holes clear during construction.

a. Single-Door Frames: Drill stop in strike jamb to receive three door silencers.
b. Double-Door Frames: Drill stop in head jamb to receive two door silencers.

E. Fabricate concealed stiffeners, edge channels, and hardware reinforcement from either cold- or hot-rolled steel sheet.

F. Hardware Preparation: Factory prepare hollow metal work to receive templated mortised hardware; include cutouts, reinforcement, mortising, drilling, and tapping according to the Door Hardware Schedule and templates furnished as specified in Division 08 Section "Door Hardware."

1. Locate hardware as indicated, or if not indicated, according to ANSI/NAAMM-HMMA 861.
2. Reinforce doors and frames to receive nontemplated, mortised and surface-mounted door hardware.
3. Comply with applicable requirements in ANSI/SDI A250.6 and ANSI/DHI A115 Series specifications for preparation of hollow metal work for hardware.

G. Stops and Moldings: Provide stops and moldings around glazed lites where indicated. Form corners of stops and moldings with butted or mitered hairline joints.

1. Single Glazed Lites: Provide fixed stops and moldings welded on secure side of hollow metal work.
2. Multiple Glazed Lites: Provide fixed and removable stops and moldings so that each glazed lite is capable of being removed independently.
3. Provide fixed frame moldings on outside of exterior and on secure side of interior doors and frames.
4. Provide loose stops and moldings on inside of hollow metal work.
5. Coordinate rabbet width between fixed and removable stops with type of glazing and type of installation indicated.

2.10 STEEL FINISHES

A. Prime Finish: Apply manufacturer's standard primer immediately after cleaning and pretreating.

1. Shop Primer: Manufacturer's standard, fast-curing, lead- and chromate-free primer complying with ANSI/SDI A250.10 acceptance criteria; recommended by primer manufacturer for substrate; compatible with substrate and field-applied coatings despite prolonged exposure.

PART 3 - EXECUTION

3.1 EXAMINATION

A. Examine substrates, areas, and conditions, with Installer present, for compliance with requirements for installation tolerances and other conditions affecting performance of the Work.

B. Examine roughing-in for embedded and built-in anchors to verify actual locations before frame installation.

C. For the record, prepare written report, endorsed by Installer, listing conditions detrimental to performance of the Work.

D. Proceed with installation only after unsatisfactory conditions have been corrected.

3.2 PREPARATION

A. Remove welded-in shipping spreaders installed at factory. Restore exposed finish by grinding, filling, and dressing, as required to make repaired area smooth, flush, and invisible on exposed faces.

B. Prior to installation, adjust and securely brace welded hollow metal frames for squareness, alignment, twist, and plumbness to the following tolerances:

1. Squareness: Plus or minus 1/16 inch (1.6 mm), measured at door rabbet on a line 90 degrees from jamb perpendicular to frame head.
2. Alignment: Plus or minus 1/16 inch (1.6 mm), measured at jambs on a horizontal line parallel to plane of wall.
3. Twist: Plus or minus 1/16 inch (1.6 mm), measured at opposite face corners of jambs on parallel lines, and perpendicular to plane of wall.
4. Plumbness: Plus or minus 1/16 inch (1.6 mm), measured at jambs on a perpendicular line from head to floor.

C. Drill and tap doors and frames to receive nontemplated, mortised, and surface-mounted door hardware.

3.3 INSTALLATION

A. General: Install hollow metal work plumb, rigid, properly aligned, and securely fastened in place; comply with Drawings and manufacturer's written instructions.

B. Hollow Metal Frames: Install hollow metal frames of size and profile indicated. Comply with ANSI/SDI A250.11.

1. Set frames accurately in position, plumbed, aligned, and braced securely until permanent anchors are set. After wall construction is complete, remove temporary braces, leaving surfaces smooth and undamaged.

a. At fire-protection-rated openings, install frames according to NFPA 80.
b. Install frames with removable glazing stops located on secure side of opening.
c. Install door silencers in frames before grouting.
d. Remove temporary braces necessary for installation only after frames have been properly set and secured.
e. Check plumbness, squareness, and twist of frames as walls are constructed. Shim as necessary to comply with installation tolerances.
f. Field apply bituminous coating to backs of frames that are filled with grout containing antifreezing agents.

2. Floor Anchors: Provide floor anchors for each jamb and mullion that extends to floor, and secure with postinstalled expansion anchors.

a. Floor anchors may be set with powder-actuated fasteners instead of postinstalled expansion anchors if so indicated and approved on Shop Drawings.

3. Metal-Stud Partitions: Solidly pack mineral-fiber insulation behind frames.
4. Masonry Walls: Coordinate installation of frames to allow for solidly filling space between frames and masonry with grout.
5. In-Place Concrete or Masonry Construction: Secure frames in place with postinstalled expansion anchors. Countersink anchors, and fill and make smooth, flush, and invisible on exposed faces.
6. Installation Tolerances: Adjust hollow metal door frames for squareness, alignment, twist, and plumb to the following tolerances:

a. Squareness: Plus or minus 1/16 inch (1.6 mm), measured at door rabbet on a line 90 degrees from jamb perpendicular to frame head.
b. Alignment: Plus or minus 1/16 inch (1.6 mm), measured at jambs on a horizontal line parallel to plane of wall.
c. Twist: Plus or minus 1/16 inch (1.6 mm), measured at opposite face corners of jambs on parallel lines, and perpendicular to plane of wall.
d. Plumbness: Plus or minus 1/16 inch (1.6 mm), measured at jambs at floor.

C. Hollow Metal Doors: Fit hollow metal doors accurately in frames, within clearances specified below. Shim as necessary.

1. Non-Fire-Rated Standard Steel Doors:

a. Jambs and Head: 1/8 inch (3 mm) plus or minus 1/16 inch (1.6 mm).

b. Between Edges of Pairs of Doors: 1/8 inch (3 mm) plus or minus 1/16 inch (1.6 mm).
c. Between Bottom of Door and Top of Threshold: Maximum 3/8 inch (9.5 mm).
d. Between Bottom of Door and Top of Finish Floor (No Threshold): Maximum 3/4 inch (19 mm).

2. Fire-Rated Doors: Install doors with clearances according to NFPA 80.

D. Glazing: Comply with installation requirements in Division 08 Section "Glazing" and with hollow metal manufacturer's written instructions.

1. Secure stops with countersunk flat- or oval-head machine screws spaced uniformly not more than 9 inches (230 mm) o.c. and not more than 2 inches (50 mm) o.c. from each corner.

3.4 ADJUSTING AND CLEANING

A. Final Adjustments: Check and readjust operating hardware items immediately before final inspection. Leave work in complete and proper operating condition. Remove and replace defective work, including hollow metal work that is warped, bowed, or otherwise unacceptable.

B. Remove grout and other bonding material from hollow metal work immediately after installation.

C. Prime-Coat Touchup: Immediately after erection, sand smooth rusted or damaged areas of prime coat and apply touchup of compatible air-drying, rust-inhibitive primer.

D. Metallic-Coated Surfaces: Clean abraded areas and repair with galvanizing repair paint according to manufacturer's written instructions.

END OF SECTION 081113

SECTION 081416 - FLUSH WOOD DOORS

PART 1 - GENERAL

1.1 RELATED DOCUMENTS

A. Drawings and general provisions of the Contract, including General and Supplementary Conditions and Division 01 Specification Sections, apply to this Section.

1.2 SUMMARY

A. Section Includes:

1. Solid-core doors with faces.
2. Shop priming flush wood doors.
3. Factory fitting flush wood doors to frames and factory machining for hardware.

B. Related Requirements:
1. Section 088000 "Glazing" for glass view panels in flush wood doors.
2. Section 099123 "Interior Painting" for field finishing doors.

1.3 PREINSTALLATION MEETINGS

A. Preinstallation Conference: Conduct conference at Project site.

1.4 ACTION SUBMITTALS

A. Product Data: For each type of door. Include details of core and edge construction and trim for openings.

B. Shop Drawings: Indicate location, size, and hand of each door; elevation of each kind of door; construction details not covered in Product Data; and the following:

1. Dimensions and locations of blocking.
2. Dimensions and locations of mortises and holes for hardware.
3. Dimensions and locations of cutouts.
4. Undercuts.
5. Requirements for veneer matching.
6. Doors to be factory finished and finish requirements.
7. Fire-protection ratings for fire-rated doors.

C. Samples for Verification:

1. Factory finishes applied to actual door face materials, approximately 8 by 10 inches (200 by 250 mm), for each material and finish**.**
2. Plastic laminate, 6 inches (150 mm) square, for each color, texture, and pattern selected.

3. Corner sections of doors, approximately 8 by 10 inches (200 by 250 mm), with door faces and edges representing actual materials to be used.
   a. Finish veneer-faced door Samples with same materials proposed for factory-finished doors.
4. Frames for light openings, 6 inches (150 mm) long, for each material, type, and finish required.

1.5 INFORMATIONAL SUBMITTALS

A. Sample Warranty: For special warranty.

B. Quality Standard Compliance Certificates: AWI Quality Certification Program certificates.

1.6 QUALITY ASSURANCE

1.7 DELIVERY, STORAGE, AND HANDLING

A. Comply with requirements of referenced standard and manufacturer's written instructions.

B. Package doors individually in cardboard cartons and wrap bundles of doors in plastic sheeting.

C. Mark each door on bottom rail with opening number used on Shop Drawings.

1.8 FIELD CONDITIONS

A. Environmental Limitations: Do not deliver or install doors until spaces are enclosed and weathertight, wet work in spaces is complete and dry, and HVAC system is operating and maintaining temperature between 60 and 90 deg F (16 and 32 deg C) and relative humidity between 17 and 50 percent during remainder of construction period.

1.9 WARRANTY

A. A. Special Warranty: Manufacturer agrees to repair or replace doors that fail in materials or workmanship within specified warranty period.

1. Failures include, but are not limited to, the following:

   a. Warping (bow, cup, or twist) more than 1/4 inch (6.4 mm) in a 42-by-84-inch (1067-by-2134-mm) section.
   b. Telegraphing of core construction in face veneers exceeding 0.01 inch in a 3-inch (0.25 mm in a 76.2-mm) span.

2. Warranty shall also include installation and finishing that may be required due to repair or replacement of defective doors.
3. Warranty Period for Solid-Core Interior Doors: Life of installation.

PART 2 - PRODUCTS

2.1 MANUFACTURERS

A. Manufacturers: Subject to compliance with requirements, provide products by one of the following:

1. ABS- American Building Supply- Doormerica.
2. Algoma Hardwoods, Inc.
3. Ampco Products, LLC.
4. Chappell Door Co.
5. Lambton Doors.
6. Oregon Door.
7. VT Industries Inc.

B. Source Limitations: Obtain flush wood doors from single manufacturer.

2.2 FLUSH WOOD DOORS, GENERAL

A. Quality Standard: In addition to requirements specified, comply with AWI's, AWMAC's, and WI's "Architectural Woodwork Standards."

1. Provide AWI Quality Certification Labels indicating that doors comply with requirements of grades specified.
2. Contract Documents contain selections chosen from options in quality standard and additional requirements beyond those of quality standard. Comply with those selections and requirements in addition to quality standard.

B. Fire-Rated Wood Doors: Doors complying with NFPA 80 that are listed and labeled by a qualified testing agency, for fire-protection ratings indicated, based on testing at positive pressure according to NFPA 252.

1. Oversize Fire-Rated Door Assemblies: For units exceeding sizes of tested assemblies, provide certification by a qualified testing agency that doors comply with standard construction requirements for tested and labeled fire-rated door assemblies except for size.
2. Temperature-Rise Limit: where required, provide doors that have a maximum transmitted temperature end point of not more than 450 deg F (250 deg C) above ambient after 30 minutes of standard fire-test exposure.
3. Cores: Provide core specified or mineral core as needed to provide fire-protection rating indicated.
4. Edge Construction: Provide edge construction with intumescent seals concealed by outer stile. Comply with specified requirements for exposed edges.
5. Pairs: Provide fire-retardant stiles that are listed and labeled for applications indicated without formed-steel edges and astragals. Provide stiles with concealed intumescent seals. Comply with specified requirements for exposed edges.
6. Pairs: Provide formed-steel edges and astragals with intumescent seals.
   a. Finish steel edges and astragals to match door hardware (locksets or exit devices).

C. Smoke- and Draft-Control Door Assemblies: Listed and labeled for smoke and draft control, based on testing according to UL 1784.

D. Particleboard-Core Doors:

1. Particleboard: ANSI A208.1, Grade LD-2.
2. Blocking: Provide wood blocking in particleboard-core doors as needed to eliminate through-bolting hardware.

3. Provide doors with structural-composite-lumber cores instead of particleboard cores for doors indicated to receive exit devices.

E. Structural-Composite-Lumber-Core Doors:

1. Structural Composite Lumber: WDMA I.S.10.

a. Screw Withdrawal, Face: 700 lbf (3100 N).
b. Screw Withdrawal, Edge: 400 lbf (1780 N).

2.3 DOORS FOR OPAQUE FINISH

A. Interior Solid-Core Doors:

1. Grade: Premium.
2. Faces: Hardboard or MDF.
   a. Hardboard Faces: ANSI A135.4, Class 1 (tempered) or Class 2 (standard).
   b. MDF Faces: ANSI A208.2, Grade 150 or Grade 160.

3. Exposed Vertical and Top Edges: Any closed-grain hardwood.
4. Core: Structural composite lumber.
5. Construction: Three plies, either bonded or nonbonded.
6. WDMA I.S.1-A Performance Grade: Heavy Duty.

2.4 LIGHT FRAMES AND LOUVERS

A. Wood Beads for Light Openings in Wood Doors: Provide manufacturer's standard wood beads unless otherwise indicated.
   1. Profile: Flush rectangular beads.
   2. At wood-core doors with 20-minute fire-protection ratings, provide wood beads and metal glazing clips approved for such use.

B. Wood-Veneered Beads for Light Openings in Fire-Rated Doors: Manufacturer's standard wood-veneered noncombustible beads matching veneer species of door faces and approved for use in doors of fire-protection rating indicated. Include concealed metal glazing clips where required for opening size and fire-protection rating indicated.

2.5 FABRICATION

A. Factory fit doors to suit frame-opening sizes indicated. Comply with clearance requirements of referenced quality standard for fitting unless otherwise indicated.

1. Comply with NFPA 80 requirements for fire-rated doors.

B. Factory machine doors for hardware that is not surface applied. Locate hardware to comply with DHI-WDHS-3. Comply with final hardware schedules, door frame Shop Drawings, BHMA-156.115-W, and hardware templates.

1. Coordinate with hardware mortises in metal frames to verify dimensions and alignment before factory machining.
2. Metal Astragals: Factory machine astragals and formed-steel edges for hardware for pairs of fire-rated doors.

C. Transom and Side Panels: Fabricate matching panels with same construction, exposed surfaces, and finish as specified for associated doors. Finish bottom edges of transoms and top edges of rabbeted doors same as door stiles.

1. Fabricate door and transom panels with full-width, solid-lumber, rabbeted, meeting rails. Provide factory-installed spring bolts for concealed attachment into jambs of metal door frames.

D. Openings: Factory cut and trim openings through doors.

1. Light Openings: Trim openings with moldings of material and profile indicated.
2. Glazing: Factory install glazing in doors indicated to be factory finished. Comply with applicable requirements in Section 088000 "Glazing."
3. Louvers: Factory install louvers in prepared openings.

2.6 SHOP PRIMING

A. Doors for Opaque Finish: Shop prime faces, all four edges, edges of cutouts, and mortises with one coat of wood primer specified in Section 099123" Interior Painting."

PART 3 - EXECUTION

3.1 EXAMINATION

A. Examine doors and installed door frames, with Installer present, before hanging doors.

1. Verify that installed frames comply with indicated requirements for type, size, location, and swing characteristics and have been installed with level heads and plumb jambs.
2. Reject doors with defects.

B. Proceed with installation only after unsatisfactory conditions have been corrected.

3.2 INSTALLATION

A. Hardware: For installation, see Section 087100 "Door Hardware."

B. Installation Instructions: Install doors to comply with manufacturer's written instructions and referenced quality standard, and as indicated.

1. Install fire-rated doors according to NFPA 80.
2. Install smoke- and draft-control doors according to NFPA 105.

C. Job-Fitted Doors: Align and fit doors in frames with uniform clearances and bevels as indicated below; do not trim stiles and rails in excess of limits set by manufacturer or permitted for fire-rated doors. Machine doors for hardware. Seal edges of doors, edges of cutouts, and mortises after fitting and machining.

1. Clearances: Provide 1/8 inch (3.2 mm) at heads, jambs, and between pairs of doors. Provide 1/8 inch (3.2 mm) from bottom of door to top of decorative floor finish or covering unless otherwise indicated. Where threshold is shown or scheduled, provide1/4 inch (6.4 mm) from bottom of door to top of threshold unless otherwise indicated.

a. Comply with NFPA 80 for fire-rated doors.
b. Bevel non-fire-rated doors 1/8 inch in 2 inches (3-1/2 degrees) at lock and hinge edges.

2. Bevel fire-rated doors 1/8 inch in 2 inches (3-1/2 degrees) at lock edge; trim stiles and rails only to extent permitted by labeling agency.

D. Factory-Fitted Doors: Align in frames for uniform clearance at each edge.

E. Factory-Finished Doors: Restore finish before installation if fitting or machining is required at Project site.

3.3 ADJUSTING

A. Operation: Rehang or replace doors that do not swing or operate freely.

B. Finished Doors: Replace doors that are damaged or that do not comply with requirements. Doors may be repaired or refinished if Work complies with requirements and shows no evidence of repair or refinishing.

END OF SECTION 081416

SECTION 083323 – OVERHEAD COILNG DOORS

PART 1 GENERAL

1.1 SECTION INCLUDES

A. Overhead coiling insulated fire doors.

B. Overhead coiling insulated non-rated doors.

1.2 REFERENCES

A. Section 05500 - Metal Fabrications: Support framing and framed opening.

B. Section 06200 - Finish Carpentry: Wood jamb and head trim.

C. Section 08710 - Door Hardware: Product Requirements for cylinder core and keys.

D. Section 09900 – Paints & Coatings: Field applied finish.

E. Section 260533 - Raceway & Boxes for Electrical Systems: Conduit from electric circuit to door operator and from door operator to control station.

F. Section 262726 - Wiring Devices: Power to disconnect.

1.3 REFERENCES

A. ASTM A 653 - Standard Specification for Steel Sheet, Zinc-Coated (Galvanized) or Zinc-Iron Alloy-Coated (Galvannealed) by the Hot-Dip Process.

B. ASTM A 666 - Standard Specification for Austenitic Stainless Steel Sheet, Strip, Plate, and Flat Bar.

C. ASTM A 924 - Standard Specification for General Requirements for Steel Sheet, Metallic-Coated by the Hot-Dip Process.

D. NEMA 250 - Enclosures for Electrical Equipment (1000 Volts Maximum).

E. NEMA MG 1 - Motors and Generators.

F. NFPA-80 – Standard for Fire Doors and Fire Windows.

G. ASTM B 221 - Standard Specification for Aluminum and Aluminum-Alloy Extruded Bars, Rods, Wire, Profiles, and Tubes.

1.4 DESIGN / PERFORMANCE REQUIREMENTS

A. Fire Rated Assemblies: Provide assemblies complying with NFPA 80 and listed in UL Directory or Intertek Testing Services (Warnock Hersey Listed) Directory.

B. Windload: Design door assembly to withstand wind/suction load of 20 psf (958 Pa) without damage to door or assembly components. Does not apply to doors with optional wearstrip guides.

C. Operation: Design door assembly, including operator, to operate for not less than 200,000 cycles

D. Single-Source Responsibility: Provide doors, tracks, motors, and accessories from one manufacturer for each type of door. Provide secondary components from source acceptable to manufacturer of primary components.

E. Products Requiring Electrical Connection: Listed and classified by Underwriters Laboratories, Inc. acceptable to authority having jurisdiction as suitable for purpose specified.

1.5 SUBMITTALS

A. Submit under provisions of Section 013000 – Administrative Requirements.

B. Product Data: Manufacturer's data sheets on each product to be used, including:
1. Preparation instructions and recommendations.
2. Storage and handling requirements and recommendations.
3. Details of construction and fabrication.
4. Installation methods.

C. Shop Drawings: Include detailed plans and elevations, details of framing members, anchoring methods, clearances, hardware, and accessories.

D. Selection Samples: For each finish product specified, two complete sets of color chips representing manufacturer's full range of available colors and patterns.

E. Verification Samples: For each finish product specified, two samples, minimum size 6 inches (150 mm) long, representing actual product, color, and patterns.

F. Manufacturer's Certificates: Certify products meet or exceed specified requirements.

G. Operation and Maintenance Data: Submit lubrication requirements and frequency, and periodic adjustments required.

1.6 QUALITY ASSURANCE

A. Manufacturer Qualifications: Company specializing in performing Work of this section with a minimum of five years experience.

B. Installer Qualifications: Installer Qualifications: Company specializing in performing Work of this section with minimum three years and approved by manufacturer.

C. Mock-Up: Provide a mock-up for evaluation of surface preparation techniques and application workmanship.
1. Finish areas designated by Architect.

2. Do not proceed with remaining work until workmanship, color, and sheen are approved by Architect.
3. Refinish mock-up area as required to produce acceptable work.

1.7 DELIVERY, STORAGE, AND HANDLING

A. Store products in manufacturer's unopened packaging until ready for installation.

B. Protect materials from exposure to moisture. Do not deliver until after wet work is complete and dry.

C. Store materials in a dry, warm, ventilated weathertight location.

1.8 PROJECT CONDITIONS

A. Maintain environmental conditions (temperature, humidity, and ventilation) within limits recommended by manufacturer for optimum results. Do not install products under environmental conditions outside manufacturer's absolute limits.

1.9 COORDINATION

A. Coordinate Work with other operations and installation of adjacent materials to avoid damage to installed materials.

1.10 WARRANTY

A. Manufacturer’s Warranty: Provide manufacturer’s two year limited warranty.

B. Warranty: Manufacturer’s limited door and operators System warranty of all parts and components of the system except counterbalance spring and finish for 3 years or 20,000 cycles, whichever comes first.

PART 2 PRODUCTS

2.1 MANUFACTURERS

A. Drawings and specifications are based on manufacturer's literature from Overhead Door Corporation unless otherwise indicated. Other manufacturers to comply with the minimum levels of material and detailing indicated on the drawings and in the specifications and in conformance with provisions of Section 016000 – Product Requirements.

B. Acceptable Manufacturer: Overhead Door Corp., 2501 S. State Hwy. 121, Suite 200, Lewisville, TX 75067. ASD. Tel. Toll Free: (800) 275-3290. Phone: (469) 549-7100. Fax: (972) 906-1499. Web Site: www.overheaddoor.com.

C. Requests for substitutions will be considered in accordance with provisions of Section 016000 – Product Requirements.

2.2 OVERHEAD COILING INSULATED FIRE DOORS

A. Acceptable Product: Overhead Coiling Fire Doors: FireKing Series 635 Insulated Fire Doors, by Overhead Door Corporation.
   1. Label: Provide fire doors certified with the following listing.
      a. Rolling fire doors for masonry/steel construction up to 152 sf and 13 feet 6 inches in width or height shall be labeled. Provide UL labeling as required for rating required by applicable codes.
      b. Rolling fire doors over 152 sf (14.12 sm) shall receive the UL Oversize Fire Door Label.
      c. Provide UL labeled smoke protection where indicated. Comply with with UL label for "Leakage Rated Assembly" or "S" label.
         1) Comply with NFPA 105 air leakage requirements.
         2) Pass UL test procedure 1784.
   2. Curtain: Interlocking roll-formed slats. Windlocks shall be attached to each end of alternate slats to prevent lateral movement.
      a. Flat profile type F-265 with back cover and mineral wool filling internal space. For doors thru 24 feet (7.32 m) high and 24 feet (7.32 m) wide, fabricated of:
         1) 22 gauge galvanized steel.
      b. R-Value: 4.5.
      c. STC (Sound Transmission Class).
         1) Door Assembly 17
         2) Door Assembly with brush seals 18
         3) Curtain Only 21
   3. Finish:
      a. Galvanized Steel: Slats and hood galvanized steel to ASTM A 653 finished with a rust-inhibitive roll coating process, including bonderizing, a 0.2 mils thick baked prime paint, and a 0.6 mils thick baked top coat.
         1) Standard Polyester Based Top Coat.
   4. Bottom Bar: Two structural stainless steel angles 1-1/2 inch by 1-1/2 inch by 1/8 inch (38 mm by 38 mm by 3 mm) minimum.
      a. Provide sloping bottom bar within UL limits.
   5. Guides: Three structural steel or stainless steel angles with minimum thickness of 1/4 inch (6 mm) mounted to the face of the jamb. Guides also include locking bar or wind bar.
      a. Finish: PowderGuard Zinc Finish for guides, bottom bar and head plate.
      b. Fastening Guides to Masonry Fire Walls: UL listed for fire and smoke in accordance with manufacturer’s listing.
      c. Fastening Guides to Non-Masonry Fire Walls: Comply with the manufacturer’s listing.
   6. Brackets:
      a. Hot rolled steel with PowderGuard Zinc finish.
   7. Counterbalance: Helical torsion spring type housed in a steel tube or pipe barrel, supporting the curtain with deflection limited to 0.03 inch per foot of span. Counterbalance is adjustable by means of an adjusting tension wheel.
   8. Hood:
      a. Fabricate of 22 gauge galvanized primed steel for wall openings over 19 feet (5.79 m) wide.
      b. Hood equipped with thermally controlled, internal, galvanized steel flame baffle as required for FM listing.

c. Provide one intermediate support bracket for wall openings over 13 feet 6 inches (4.11 m) wide
d. Provide two support brackets for wall openings over 19 feet (5.79 m) wide.

9. Manual Operation:
   a. Floor resettable chain hoist.
10. Electric Motor Operation: Provide electric operator as listed in the door UL file, for size as recommended by manufacturer to move door in either direction.
   a. Floor Resettable Electric Motor Operation.
   b. Sensing Edge Protection:
      1) Electric sensing edge.
   c. Operator Controls:
      1) Push-button operated control stations with open, close, and stop buttons.
      2) Key operation with NEMA 1 interior, NEMA 4 exterior, surface and flush mounted open, close, and stop controls.
   d. Special Operation:
      1) Card reader control.
11. Automatic Closure Standard Fire Door: UL approved release mechanism equipped with a 165 degree fusible link.
   a. Doors will be equipped with floor resettable electric motor operation system, requiring only one sash chain to be routed to the operated side (sash chain not required to be routed to adjusting wheel side.)
      1) Release mechanism includes planetary gear differential system.
      2) Door will close by a thermally actuated link rated @165 degrees F, or by an optional listed releasing device, or by manually activating the release handle.
      3) All counterbalance spring tension shall be maintained when the release mechanism is activated.
      4) After closing by manual activation of the release handle, the door shall be able to be reset by one person from one side of the door (re-engaging the release handle). No tools are required to reset the release mechanism.
      5) After closing by alarm activation with power on the electric motor, the door shall be able to be reset by resetting the alarm system without additional tools required.
12. Governor: If required by size of chain hoist doors, provide a viscous governor to regulate the rate of descent of the door in a quiet manner. Use an engagement type that is not engaged during normal door operation, but after cable release, will retard the speed during automatic door closure to under 24 inches per second and not less than 6 inches per second per NFPA 80.
13. Locking:
   a. Interior slide bolt lock for electric operation with interlock switch.
14. Wall Mounting Condition: As indicated on drawings

2.3 OVERHEAD COILING INSULATED DOORS – NON-RATED

A. Acceptable Product: Heavy Duty Industrial Doors: 620 Series Stormtite Service Doors by Overhead Door Corporation.
   1. Curtain: Interlocking roll-formed slats as specified following. Endlocks shall be attached to each end of alternate slats to prevent lateral movement.
      a. Flat profile type F-265 for doors up to 18 feet 4 inches (5.59 m) wide, fabricated of:

1) 22 gauge galvanized steel.

b. Flat profile type F-265 for doors between 18 feet 4 inches (5.59 m) and 25 feet 4 inches (7.72 m) wide, fabricated of:

1) 22 gauge galvanized steel.

2. Finish:

a. Galvanized Steel: Slats and hood galvanized in accordance with ASTM A 653 and receive rust-inhibitive, roll coating process, including 0.2 mils thick baked-on prime paint, and 0.6 mils thick baked-on polyester top coat.

1) Polyester Top Coat.

(a) Gray polyester.

(b) Tan polyester.

(c) White polyester.

(d) Brown polyester.

2) Non-galvanized exposed ferrous surfaces shall receive one coat of rust-inhibitive primer.

3. Weatherseals:

a. Vinyl bottom seal, exterior guide and internal hood seals.

b. Interior guide weatherseal.

c. Lintel weatherseal.

4. Bottom Bar:

a. Extruded aluminum for doors up to 15 feet 4 inches (4.67 m) wide.

b. Two primed steel angles for doors over 15 feet 4 inches (4.67 m) wide.

c. Two galvanized steel angles.

5. Guides: Three structural steel angles.

a. Finish: PowderGuard Weathered finish with iron/black powder.

b. Finish: PowderGuard Zinc Finish for guides, bottom bar and head plate.

6. Brackets:

a. Hot rolled prime painted steel to support counterbalance, curtain and hood.

b. Galvanized steel to support counterbalance, curtain and hood.

7. Counterbalance: Helical torsion spring type housed in a steel tube or pipe barrel, supporting the curtain with deflection limited to 0.03 inch per foot of span. Counterbalance is adjustable by means of an adjusting tension wheel.

8. Hood: Provide with internal hood baffle weatherseal.

a. 24 gauge galvanized steel with intermediate supports as required.

9. Manual Operation:

a. Manual push up for doors up to 96 SF.

b. Chain hoist for doors up to 96 SF.

c. Chain hoist for doors over 96 SF.

10. Electric Motor Operation: Provide UL listed electric operator, size as recommended by manufacturer to move door in either direction at not less than 2/3 foot nor more than 1 foot per second.

a. Sensing Edge Protection:

1) Electric sensing edge.

b. Operator Controls:

1) Push-button operated control stations with open, close, and stop buttons.

2) Key operation with NEMA 1 interior, NEMA 4 exterior, surface and flush mounted open, close, and stop controls.

c. Special Operation:
1) Card reader control.
d. Motor Voltage: 115/230 single phase, 60 Hz.

11. Windload Design:
a. Standard windload shall be 20 PSF.
12. Locking
a. Chain keeper locks for chain hoist operation.
13. Wall Mounting Condition:
a. Face-of-wall mounting.

PART 3 EXECUTION

3.1 EXAMINATION

A. Verify opening sizes, tolerances and conditions are acceptable.

B. Examine conditions of substrates, supports, and other conditions under which this work is to be performed.

C. If substrate preparation is the responsibility of another installer, notify Architect of unsatisfactory preparation before proceeding.

3.2 PREPARATION

A. Clean surfaces thoroughly prior to installation.

B. Prepare surfaces using the methods recommended by the manufacturer for achieving the best result for the substrate under the project conditions.

3.3 INSTALLATION

A. Install in accordance with manufacturer's instructions.

B. Install rolling counter fire doors in compliance with requirements of NFPA 80. Test fire-release system and reset components after testing.

C. Use anchorage devices to securely fasten assembly to wall construction and building framing without distortion or stress.

D. Securely and rigidly brace components suspended from structure. Secure guides to structural members only.

E. Fit and align assembly including hardware; level and plumb, to provide smooth operation.

F. Coordinate installation of sealants and backing materials at frame perimeter as specified in Section 079000.

G. Install perimeter trim and closures.

H. Instruct Owner's personnel in proper operating procedures and maintenance schedule.

3.4 ADJUSTING

A. Test for proper operation and adjust as necessary to provide proper operation without binding or distortion.

B. Adjust hardware and operating assemblies for smooth and noiseless operation.

3.5 CLEANING

A. Clean curtain and components using non-abrasive materials and methods recommended by manufacturer.

B. Remove labels and visible markings.

C. Touch-up, repair or replace damaged products before Substantial Completion.

3.6 PROTECTION

A. Protect installed products until completion of project.

END OF SECTION 083323

SECTION 084113 - ALUMINUM-FRAMED ENTRANCES AND STOREFRONTS

PART 1 - GENERAL

1.1 SUMMARY

A. Section Includes: Kawneer Architectural Aluminum Storefront Systems and Entrances, including perimeter trims, stools, accessories, shims and anchors, and perimeter sealing.
   1. Kawneer Aluminum Storefront System:
      a. Trifab® VG 451 Storefront System – 2" x 4-1/2" nominal dimension; Non-Thermal; Front Glazed.

1.2 DEFINITIONS

A. Definitions: For fenestration industry standard terminology and definitions refer to American Architectural Manufactures Association (AAMA) – AAMA Glossary (AAMA AG).

1.3 PERFORMANCE REQUIREMENTS

A. General Performance: Aluminum-framed storefront system shall withstand the effects of the following performance requirements without exceeding performance criteria or failure due to defective manufacture, fabrication, installation, or other defects in construction:
   1. Design Wind Loads: Determine design wind loads applicable to the Project from basic wind speed indicated in miles per hour, according to ASCE 7, Section 6.5, "Method 2-Analytical Procedure," based on mean roof heights above grade indicated on Drawings.

B. Storefront System Performance Requirements:
   Wind loads: In accordance with applicable codes governing the installation

   1. Air Infiltration: The test specimen shall be tested in accordance with ASTM E 283. Air infiltration rate shall not exceed 0.06 cfm/ft2 (0.3 l/s · m2) at a static air pressure differential of 6.24 psf (300 Pa).
   2. Water Resistance: The test specimen shall be tested in accordance with ASTM E 331. There shall be no leakage at a minimum static air pressure differential of 8 psf (383 Pa) as defined in AAMA 501.
   3. Uniform Load: A static air design load of 20 psf (958 Pa) shall be applied in the positive and negative direction in accordance with ASTM E 330. There shall be no deflection in excess of L/175 of the span of any framing member. At a structural test load equal to 1.5 times the specified design load, no glass breakage or permanent set in the framing members in excess of 0.2% of their clear spans shall occur.
   4. Condensation Resistance (CRF): When tested to AAMA Specification 1503, the condensation resistance factor shall not be less than:
      a. Glass to Exterior – 70frame and 69glass (low-e) or 69 frame and 58 glass (clear).
      b. Glass to Center – 62 frame and 68glass (low-e) or 63 frame and 56 glass (clear).
      c. Glass to Interior – 56 frame and 67 glass (low-e) or 54 frame and 58 glass (clear).
   5. Windborne-Debris-Impact-Resistance Performance: Shall be tested in accordance with ASTM E 1886 and information in ASTM E 1996 and /or AAMA 506.
      a. Large-Missile Impact: For aluminum-framed systems located within 30 feet of grade.
      b. Small-Missile Impact: For aluminum-framed systems located more than 30 feet above grade.

C. Entrance System Performance Requirements:
   1. Air Infiltration: For single acting offset pivot or butt hung entrances in the closed and

locked position, the test specimen shall be tested in accordance with ASTM E 283 at a pressure differential of 6.24 psf for single doors and 1.567 psf for pairs of doors. A single 3'0" x 7'0" entrance door and frame shall not exceed 0.50 cfm per square foot. A pair of 6'0" x 7'0" entrance doors and frame shall not exceed 1.0 cfm per square foot.

2. Structural: Corner strength shall be tested per the Kawneer dual moment load test procedure and certified by an independent testing laboratory to ensure weld compliance and corner integrity.

1.4 SUBMITTALS

A. Product Data: Include construction details, material descriptions, dimensions of individual components and profiles, hardware, finishes, and installation instructions for each type of aluminum frame storefront system indicated.

B. Shop Drawings: Include plans, elevations, sections, details, hardware, and attachments to other work, operational clearances and installation details.

C. Samples for Initial Selection: For units with factory-applied color finishes including samples of hardware and accessories involving color selection.

D. Samples for Verification: For aluminum framed storefront system and components required.

E. Product Test Reports: Based on evaluation of comprehensive tests performed by a qualified testing agency for each type of aluminum-framed storefront.

F. Fabrication Sample: Of each vertical-to-horizontal intersection of aluminum-framed systems, made from 12” (300 mm) lengths of full-size components and showing details of the following:
   1. Joinery, including concealed welds.
   2. Anchorage.
   3. Expansion provisions.
   4. Glazing.
   5. Flashing and drainage.

G. Other Action Submittals:
   1. Entrance Door Hardware Schedule: Prepared by or under the supervision of supplier, detailing fabrication and assembly of entrance door hardware, as well as procedures and diagrams. Coordinate final entrance door hardware schedule with doors, frames, and related work to ensure proper size, thickness, hand, function, and finish of entrance door hardware.

1.5 QUALITY ASSURANCE

A. Installer Qualifications: An installer which has had successful experience with installation of the same or similar units required for the project and other projects of similar size and scope.

B. Manufacturer Qualifications: A manufacturer capable of providing aluminum framed storefront system that meet or exceed performance requirements indicated and of documenting this performance by inclusion of test reports, and calculations.

C. Source Limitations: Obtain aluminum framed storefront system through one source from a single manufacturer.

D. Product Options: Substitutions accepted in accordance with provisions of Section 012500 – Product Substitutions. Drawings indicate size, profiles, and dimensional requirements of aluminum framed storefront system and are based on the specific system indicated. Do not

modify size and dimensional requirements.

1. Do not modify intended aesthetic effects, as judged solely by Architect, except with Architect's approval. If modifications are proposed, submit comprehensive explanatory data to Architect for review.

E. Pre-installation Conference: Conduct conference at Project site to comply with requirements in Division 01 Section "Project Management and Coordination."

F. Structural-Sealant Glazing: Comply with ASTM C 1401, "Guide for Structural Sealant Glazing" for design and installation of structural-sealant-glazed systems.

G. Structural-Sealant Joints: Design reviewed and approved by structural-sealant manufacturer.

1.6 PROJECT CONDITIONS

A. Field Measurements: Verify actual dimensions of aluminum framed storefront openings by field measurements before fabrication and indicate field measurements on Shop Drawings.

1.7 WARRANTY

A. Manufactures Warranty: Submit, for Owner’s acceptance, manufacturer’s standard warranty.

1. Warranty Period: Two (2) years from Date of Substantial Completion of the project provided however that the Limited Warranty shall begin in no event later than six months from date of shipment by manufacturer. In addition, welded door corner construction shall be supported with a limited lifetime warranty for the life of the door under normal use.

PART 2 - PRODUCTS

2.1 MANUFACTURER – STOREFRONT SYSTEM

A. Drawings and specifications are based on manufacturer's literature from the Kawneer Company Inc. unless otherwise indicated. Other manufacturers to comply with the minimum levels of material and detailing indicated on the drawings and in conformance with provisions of Section 016000 – Product Requirements.

B. Basis-of-Design – Storefront Systems:

1. Kawneer Company Inc.
2. Trifab® VG 451 (non-Thermal) Storefront System
3. 2” x 4-1/2” System Dimensions
4. Glass: Front.

D. Substitutions: Substitutions accepted in accordance with provisions of Section 012500.

2.2 MATERIALS – STOREFRONT SYSTEMS

A. Aluminum Extrusions: Alloy and temper recommended by aluminum storefront manufacturer for strength, corrosion resistance, and application of required finish and not less than 0.070” wall thickness at any location for the main frame and complying with ASTM B 221: 6063-T6 alloy and temper.

B. Fasteners: Aluminum, nonmagnetic stainless steel or other materials to be non-corrosive and compatible with aluminum window members, trim hardware, anchors, and other components.

C. Anchors, Clips, and Accessories: Aluminum, nonmagnetic stainless steel, or zinc-coated steel or iron complying with ASTM B 633 for SC 3 severe service conditions or other suitable zinc coating; provide sufficient strength to withstand design pressure indicated.

D. Reinforcing Members: Aluminum, nonmagnetic stainless steel, or nickel/chrome-plated steel complying with ASTM B 456 for Type SC 3 severe service conditions, or zinc-coated steel or iron complying with ASTM B 633 for SC 3 severe service conditions or other suitable zinc coating; provide sufficient strength to withstand design pressure indicated.

E. Sealant: For sealants required within fabricated storefront system, provide permanently elastic, non-shrinking, and non-migrating type recommended by sealant manufacturer for joint size and movement.

F. Tolerances: Reference to tolerances for wall thickness and other cross-sectional dimensions of storefront members are nominal and in compliance with AA Aluminum Standards and Data.

2.3 MATERIALS – ENTRANCE SYSTEMS

A. Material Standard: ASTM B 221; 6063-T6 alloy and temper

C. Major portions of the door members to be 0.188" (5) nominal in thickness and glazing molding to be 0.05" (1.5) thick.

D. Tolerances: Reference to tolerances for wall thickness and other cross-sectional dimensions of entrance members are nominal and in compliance with Aluminum Standards and Data, published by The Aluminum Association.

E. Glazing gaskets shall be either EPDM elastomeric extrusions or a thermoplastic elastomer.

F. Provide adjustable glass jacks to help center the glass in the door opening.

2.5 STOREFRONT FRAMING SYSTEM

A. Brackets and Reinforcements: Manufacturer's standard high-strength aluminum with nonstaining, nonferrous shims for aligning system components.

B. Fasteners and Accessories: Manufacturer's standard corrosion-resistant, nonstaining, nonbleeding fasteners and accessories compatible with adjacent materials. Where exposes shall be stainless steel.

C. Perimeter Anchors: When steel anchors are used, provide insulation between steel material and aluminum material to prevent galvanic action

D. Packing, Shipping, Handling and Unloading: Deliver materials in manufacturer's original, unopened, undamaged containers with identification labels intact.

E. Storage and Protection: Store materials protected from exposure to harmful weather conditions. Handle storefront material and components to avoid damage. Protect storefront material against damage from elements, construction activities, and other hazards before, during and after storefront installation.

2.7 GLAZING SYSTEMS

A. Glazing: As specified in Section 088000 – Glazing.

B. Glazing Gaskets: Manufacturer's standard compression types; replaceable, extruded EPDM rubber.

C. Spacers and Setting Blocks: Manufacturer's standard elastomeric type.

D. Bond-Breaker Tape: Manufacturer's standard TFE-fluorocarbon or polyethylene material to which sealants will not develop adhesion.

E. Glazing Sealants: For structural-sealant-glazed systems, as recommended by manufacturer for joint type, and as follows:
   1. Structural Sealant: ASTM C 1184, single-component neutral-curing silicone formulation that is compatible with system components with which it comes in contact, specifically formulated and tested for use as structural sealant and approved by a structural-sealant manufacturer for use in aluminum-framed systems indicated.
      a. Color: Black
   2. Weatherseal Sealant: ASTM C 920 for Type S, Grade NS, Class 25, Uses NT, G, A, and O; single-component neutral-curing formulation that is compatible with structural sealant and other system components with which it comes in contact; recommended by structural-sealant, weatherseal-sealant, and aluminum-framed-system manufacturers for this use.
      a. Color: Matching structural sealant.

2.8 ACCESSORY MATERIALS

A. Joint Sealants: For installation at perimeter of aluminum-framed systems, as specified in Section 079000 - Joint Sealers.

B. Bituminous Paint: Cold-applied, asphalt-mastic paint complying with SSPC-Paint 12 requirements except containing no asbestos; formulated for 30 mil thickness per coat.

2.9 FABRICATION

A. Framing Members, General: Fabricate components that, when assembled, have the following characteristics:
   1. Profiles that are sharp, straight, and free of defects or deformations.
   2. Accurately fit joints; make joints flush, hairline and weatherproof.
   3. Means to drain water passing joints, condensation within framing members, and moisture migrating within the system to exterior.
   4. Physical and thermal isolation of glazing from framing members.
   5. Accommodations for thermal and mechanical movements of glazing and framing to maintain required glazing edge clearances.
   6. Provisions for field replacement of glazing.
   7. Fasteners, anchors, and connection devices that are concealed from view to greatest extent possible.

B. Mechanically Glazed Framing Members: Fabricate for flush glazing without projecting stops.

C. Structural-Sealant-Glazed Framing Members: Include accommodations for using temporary support device to retain glazing in place while structural sealant cures.

D. Storefront Framing: Fabricate components for assembly using manufactures standard installation instructions.

F. After fabrication, clearly mark components to identify their locations in Project according to Shop Drawings.

2.10 ALUMINUM FINISHES

A. Kynar finish; color to be selected by Architect from manufacturer's full range of colors.

PART 3 - EXECUTION

3.1 EXAMINATION

A. Examine openings, substrates, structural support, anchorage, and conditions, with Installer present, for compliance with requirements for installation tolerances and other conditions affecting performance of work. Verify rough opening dimensions, levelness of sill plate and operational clearances. Examine wall flashings, vapor retarders, water and weather barriers, and other built-in components to ensure a coordinated, weather tight framed aluminum storefront system installation.
   1. Masonry Surfaces: Visibly dry and free of excess mortar, sand, and other construction debris.
   2. Wood Frame Walls: Dry, clean, sound, well nailed, free of voids, and without offsets at joints. Ensure that nail heads are driven flush with surfaces in opening and within 3 inches of opening.
   3. Metal Surfaces: Dry; clean; free of grease, oil, dirt, rust, corrosion, and welding slag; without sharp edges or offsets at joints.
   4. Proceed with installation only after unsatisfactory conditions have been corrected.

3.2 STOREFRONT SYSTEM INSTALLATION

A. Comply with Drawings, Shop Drawings, and manufacturer's written instructions for installing aluminum framed storefront system, accessories, and other components.

B. Install aluminum framed storefront system level, plumb, square, true to line, without distortion or impeding thermal movement, anchored securely in place to structural support, and in proper relation to wall flashing and other adjacent construction.

C. Set sill members in bed of sealant or with gaskets, as indicated, for weather tight construction.

D. Install aluminum framed storefront system and components to drain condensation, water penetrating joints, and moisture migrating within sliding door to the exterior.

E. Separate aluminum and other corrodible surfaces from sources of corrosion or electrolytic action at points of contact with other materials.

B. Set continuous sill members and flashing in full sealant bed as specified in Division 07 Section "Joint Sealants" to produce weathertight installation. Install aluminum angle **DAMS** at ends of sill members to ensure that moisture within systems will exit exterior. Seal all joints.

3.3 ENTRANCE SYSTEM INSTALLATION

A. General: Install entrance system in accordance with manufacturer's instructions and AAMA storefront and entrance guide specifications manual.
   1. Attach to structure to permit sufficient adjustment to accommodate construction tolerances and other irregularities.

2. Provide alignment attachments and shims to permanently fasten system to building structure.
3. Align assembly plumb and level, free of warp and twist. Maintain assembly dimensional tolerances aligning with adjacent work.
4. Set thresholds in bed of mastic and secure.
5. Adjusting: Adjust operating hardware for smooth operation.
6. Field-Installed Entrance Door Hardware: Install surface-mounted entrance door hardware according to entrance door hardware manufacturers' written instructions using concealed fasteners to greatest extent possible.

B. Related Products Installation Requirements:
1. Sealants (Perimeter): Refer to Section 079000 – Joint Sealers.
2. Glass: Refer to Section 08 81 00 – Exterior Glazing
   a. Reference: ANSI Z97.1, CPSC 16 CFR 1201 and GANA Glazing Manual.

3.4 FIELD QUALITY CONTROL

A. Field Tests: Architect shall select storefront units to be tested as soon as a representative portion of the project has been installed, glazed, perimeter caulked and cured. Conduct tests for air infiltration and water penetration with manufacturer's representative present. Tests not meeting specified performance requirements and units having deficiencies shall be corrected as part of the contract amount.
1. Testing: Testing shall be performed by a qualified independent testing agency. Refer to Testing Section for payment of testing and testing requirements. Testing Standard per AAMA 503, including reference to ASTM E 783 for Air Infiltration Test and ASTM E 1105 Water Infiltration Test.
   a. Air Infiltration Tests: Conduct tests in accordance with ASTM E 783. Allowable air infiltration shall not exceed 1.5 times the amount indicated in the performance requirements or 0.09 cfm/ft2, whichever is greater.
   b. Water Infiltration Tests: Conduct tests in accordance with ASTM E 1105. No uncontrolled water leakage is permitted when tested at a static test pressure of two-thirds the specified water penetration pressure but not less than 6.24 psf (300 Pa).

B. Manufacturer's Field Services: Upon Owner’s written request, provide periodic site visit by manufacturer’s field service representative.

3.5 ADJUSTING, CLEANING, AND PROTECTION

A. Clean aluminum surfaces immediately after installing aluminum framed storefronts. Avoid damaging protective coatings and finishes. Remove excess sealants, glazing materials, dirt, and other substances.

B. Clean glass immediately after installation. Comply with glass manufacturer's written recommendations for final cleaning and maintenance. Remove nonpermanent labels, and clean surfaces.

C. Remove and replace glass that has been broken, chipped, cracked, abraded, or damaged during construction period.

D. Adjust operating entrance door hardware to function smoothly as recommended by manufacturer.

A. For entrance doors accessible to people with disabilities, adjust closers to provide a 3-second closer sweep period for doors to move from a 70-degree open position to 3 inches (75 mm) from the latch, measured to the leading door edge.

END OF SECTION 084113

SECTION 087100 – DOOR HARDWARE

PART 1 - GENERAL

1.1 RELATED DOCUMENTS

A. Drawings and general provisions of the Contract, including General and Supplementary Conditions and Division 01 Specification Sections, apply to this Section.

1.2 SUMMARY

A. Section includes:

1. Mechanical and electrified door hardware for:

a. Swinging doors.
b. Sliding doors.

B. Exclusions: Unless specifically listed in hardware sets, hardware is not specified in this section for:

1. Windows
2. Cabinets (casework), including locks in cabinets
3. Signage
4. Toilet accessories
5. Overhead doors

C. Related Sections:

1. Division 01 Section “Alternates” for alternates affecting this section.
2. Division 07 Section “Joint Sealants” for sealant requirements applicable to threshold installation specified in this section.
3. Division 09 sections for touchup finishing or refinishing of existing openings modified by this section.

1.3 REFERENCES

A. UL - Underwriters Laboratories

1. UL 10B - Fire Test of Door Assemblies
2. UL 10C - Positive Pressure Test of Fire Door Assemblies
3. UL 1784 - Air Leakage Tests of Door Assemblies
4. UL 305 - Panic Hardware

B. DHI - Door and Hardware Institute

1. Sequence and Format for the Hardware Schedule

2. Recommended Locations for Builders Hardware
3. Key Systems and Nomenclature

C. ANSI - American National Standards Institute

1. ANSI/BHMA A156.1 - A156.29, and ANSI/BHMA A156.31 - Standards for Hardware and Specialties

1.4 SUBMITTALS

A. General:

1. Submit in accordance with Conditions of Contract and Division 01 requirements.
2. Highlight, encircle, or otherwise specifically identify on submittals deviations from Contract Documents, issues of incompatibility or other issues which may detrimentally affect the Work.
3. Prior to forwarding submittal, comply with procedures for verifying existing door and frame compatibility for new hardware, as specified in PART 3, “EXAMINATION” article, herein.

B. Action Submittals:

1. Product Data: Product data including manufacturers’ technical product data for each item of door hardware, installation instructions, maintenance of operating parts and finish, and other information necessary to show compliance with requirements.
2. Door Hardware Schedule: Submit schedule with hardware sets in vertical format as illustrated by Sequence of Format for the Hardware Schedule as published by the Door and Hardware Institute. Indicate complete designations of each item required for each door or opening, include:

   a. Door Index; include door number, heading number, and Architects hardware set number.
   b. Type, style, function, size, and finish of each hardware item.
   c. Name and manufacturer of each item.
   d. Fastenings and other pertinent information.
   e. Location of each door with room name and number included.
   f. Hand of door with degree of opening.
   g. Explanation of all abbreviations, symbols, and codes contained in schedule.
   h. Mounting locations for hardware.
   i. Door and frame sizes and materials.

3. Key Schedule:

   a. After Keying Conference, provide keying schedule listing levels of keying as well as explanation of key system's function, key symbols used and door numbers controlled.
   b. Use ANSI/BHMA A156.28 “Recommended Practices for Keying Systems” as guideline for nomenclature, definitions, and approach for selecting optimal keying system.
   c. Provide 3 copies of keying schedule for review prepared and detailed in accordance with referenced DHI publication.

4. Templates: After final approval of hardware schedule, provide templates for doors, frames and other work specified to be factory prepared for door hardware installation.

C. Closeout Submittals:

1. Operations and Maintenance Data : Provide in accordance with Division 01 and include:

a. Complete information on care, maintenance, and adjustment; data on repair and replacement parts, and information on preservation of finishes.
b. Catalog pages for each product.
c. Name, address, and phone number of local representative for each manufacturer.
d. Parts list for each product.
e. Final approved hardware schedule, edited to reflect conditions as-installed.
f. Final keying schedule

1.5 QUALITY ASSURANCE

A. Product Substitutions: Comply with product requirements stated in Division 01 and as specified herein.

1. Where specific manufacturer's product is named and accompanied by "No Substitute," including make or model number or other designation, provide product specified. (Note: Certain products have been selected for their unique characteristics and particular project suitability.)

a. Where no additional products or manufacturers are listed in product category, requirements for "No Substitute" govern product selection.

2. Where products indicate "acceptable manufacturers" or "acceptable manufacturers and products", provide product from specified manufacturers, subject to compliance with specified requirements and "Single Source Responsibility" requirements stated herein.

B. Supplier Qualifications and Responsibilities: Recognized architectural hardware supplier with record of successful in-service performance for supplying door hardware similar in quantity, type, and quality to that indicated for this Project.

1. Warehousing Facilities: In El Paso County, Texas.
2. Scheduling Responsibility: Preparation of door hardware and keying schedules.

C. Subcontractor Qualifications: Qualified tradesmen, skilled in application of commercial grade hardware with record of successful in-service performance for installing door hardware in El Paso County, Texas of similar in quantity, type, and quality to that indicated for this Project.

D. Architectural Hardware Consultant Qualifications: Person who is experienced in providing consulting services for door hardware installations that are comparable in material, design, and extent to that indicated for this Project and meets these requirements:

1. For door hardware, DHI-certified, Architectural Hardware Consultant (AHC) or person with 15 years' experience in bidding, detailing and ordering door hardware for projects of similar size and scope.
2. Can provide installation and technical data to Architect and other related subcontractors.

3. Can inspect and verify components are in working order upon completion of installation.

E. Single Source Responsibility: Obtain each type of door hardware from single manufacturer.

F. Fire-Rated Door Openings: Provide door hardware for fire-rated openings that complies with NFPA 80 and requirements of authorities having jurisdiction. Provide only items of door hardware that are listed and are identical to products tested by Underwriters Laboratories, Intertek Testing Services, or other testing and inspecting organizations acceptable to authorities having jurisdiction for use on types and sizes of doors indicated, based on testing at positive pressure and according to NFPA 252 or UL 10C and in compliance with requirements of fire-rated door and door frame labels.

G. Smoke- and Draft-Control Door Assemblies: Where smoke- and draft-control door assemblies are required, provide door hardware that meets requirements of assemblies tested according to UL 1784 and installed in compliance with NFPA 105.

1. Air Leakage Rate: Maximum air leakage of 0.3 cfm/sq. ft. (3 cu. m per minute/sq. m) at tested pressure differential of 0.3-inch wg (75 Pa) of water.

H. Means of Egress Doors: Latches do not require more than 15 lbf (67 N) to release latch. Locks do not require use of key, tool, or special knowledge for operation.

I. Accessibility Requirements: For door hardware on doors in an accessible route, comply with governing accessibility regulations cited in “REFERENCES” article, herein.

1. Provide operating devices that do not require tight grasping, pinching, or twisting of wrist and that operate with force of not more than 5 lbf (22.2 N).
2. Maximum opening-force requirements:

a. Interior, Non-Fire-Rated Hinged Doors: 5 lbf (22.2 N) applied perpendicular to door.
b. Fire Doors: Minimum opening force allowable by authorities having jurisdiction.

3. Bevel raised thresholds with slope of not more than 1:2. Provide thresholds not more than 1/2 inch (13 mm) high.
4. Adjust door closer sweep periods so that, from open position of 70 degrees, door will take at least 3 seconds to move to 3 inches (75 mm) from latch, measured to leading edge of door.

J. Keying Conference: Conduct conference at Project site to comply with requirements in Division 01.

1. Attendees: Owner’s Representative and Supplier’s Architectural Hardware Consultant.
2. Incorporate keying conference decisions into final keying schedule after reviewing door hardware keying system including:

1.6 DELIVERY, STORAGE, AND HANDLING

A. Inventory door hardware on receipt and provide secure lock-up for hardware delivered to Project site.

B. Tag each item or package separately with identification coordinated with final door hardware schedule, and include installation instructions, templates, and necessary fasteners with each item or package.

1. Deliver each article of hardware in manufacturer's original packaging.

C. Project Conditions:

1. Maintain manufacturer-recommended environmental conditions throughout storage and installation periods.
2. Provide secure lock-up for door hardware delivered to Project, but not yet installed. Control handling and installation of hardware items so that completion of Work will not be delayed by hardware losses both before and after installation.

D. Protection and Damage:

1. Promptly replace products damaged during shipping.
2. Handle hardware in manner to avoid damage, marring, or scratching. Correct, replace or repair products damaged during Work.
3. Protect products against malfunction due to paint, solvent, cleanser, or any chemical agent.

E. Deliver keys and permanent cores to the Owner by means as directed by the Owner.

1.7 COORDINATION

A. Installation Templates: Distribute for doors, frames, and other work specified to be factory prepared. Check Shop Drawings of other work to confirm that adequate provisions are made for locating and installing door hardware to comply with indicated requirements.

B. Direct shipments not permitted.

1.8 WARRANTY

A. Special Warranty: Manufacturer's standard form in which manufacturer agrees to repair or replace components of door hardware that fail in materials or workmanship within specified warranty period.

1. Warranty Period: Years from date of Substantial Completion, for durations indicated.

a. Closers:
1) Mechanical: 10 years

b. Exit Devices:
1) Mechanical: 3 years.

c. Locksets:
1) Mechanical: 3 years.

2. Warranty does not cover damage or faulty operation due to improper installation, improper use or abuse.

PART 2 - PRODUCTS

2.1 MANUFACTURERS

A. The Owner requires use of certain products for their unique characteristics and particular project suitability to insure continuity of existing and future performance and maintenance standards. After investigating available product offerings Awarding Authority has elected to prepare proprietary specifications. These products are specified with the notation: “No Substitute.”

1. Where “No Substitute” is noted, submittals and substitution requests for other products will not be considered.

B. Approval of manufacturers and/or products other than those listed as ”Scheduled Manufacturer ” or “Acceptable Manufacturers” in the individual article for the product category shall be in accordance with QUALITY ASSURANCE article, herein.

C. Approval of products from manufacturers indicated in “Acceptable Manufacturers” is contingent upon those products providing all functions and features and meeting all requirements of scheduled manufacturer’s product.

D. Hand of Door: Drawings show direction of slide, swing, or hand of each door leaf. Furnish each item of hardware for proper installation and operation of door movement as shown.

E. Where specified hardware is not adaptable to finished shape or size of members requiring hardware, furnish suitable types having same operation and quality as type specified, subject to Architect's approval.

2.2 MATERIALS

A. Fasteners

1. Provide hardware manufactured to conform to published templates, generally prepared for machine screw installation.
2. Furnish screws for installation with each hardware item. Finish exposed (exposed under any condition) screws to match hardware finish, or, if exposed in surfaces of other work, to match finish of this other work including prepared for paint surfaces to receive painted finish.
3. Provide concealed fasteners for hardware units exposed when door is closed except when no standard units of type specified are available with concealed fasteners. Do not use thru-bolts for installation where bolt head or nut on opposite face is exposed in other work unless thru-bolts are required to fasten hardware securely. Review door specification and advise Architect if thru-bolts are required.
4. Install hardware with fasteners provided by hardware manufacturer.

B. Provide screws, bolts, expansion shields, drop plates and other devices necessary for hardware installation.

1. Where fasteners are exposed to view: Finish to match adjacent door hardware material.

2.3 HINGES

A. Provide five-knuckle, ball bearing hinges.

1. Manufacturers and Products:

a. Scheduled Manufacturer and Product: Ives 5BB series
b. Acceptable Manufacturers and Products: Hager BB series, Bommer BB5000 series.

B. Requirements:

1. 1-3/4 inch (44 mm) thick doors, up to and including 36 inches (914 mm) wide:

a. Exterior: Standard weight, steel, 4-1/2 inches (114 mm) high
b. Interior: Standard weight, steel, 4-1/2 inches (114 mm) high

2. 1-3/4 inch (44 mm) thick doors over 36 inches (914 mm) wide:

a. Exterior: Heavy weight, steel, 5 inches (127 mm) high
b. Interior: Heavy weight, steel, 5 inches (127 mm) high

3. 2 inches or thicker doors:

a. Exterior: Heavy weight, steel, 5 inches (127 mm) high
b. Interior: Heavy weight, steel, 5 inches (127 mm) high

4. Provide three hinges per door leaf for doors 90 inches (2286 mm) or less in height, and one additional hinge for each 30 inches (762 mm) of additional door height.
5. Where new hinges are specified for existing doors or existing frames, provide new hinges of identical size to hinge preparation present in existing door or existing frame.
6. Hinge Pins: Except as otherwise indicated, provide hinge pins as follows:

a. Steel Hinges: Steel pins
b. Non-Ferrous Hinges: Stainless steel pins
c. Out-Swinging Exterior Doors: Non-removable pins
d. Out-Swinging Interior Lockable Doors: Non-removable pins
e. Interior Non-lockable Doors: Non-rising pins

7. Width of hinges: 4-1/2 inches (114 mm) at 1-3/4 inch (44 mm) thick doors, and 5 inches (127 mm) at 2 inches (51 mm) or thicker doors. Adjust hinge width as required for door, frame, and wall conditions to allow proper degree of opening.
8. Doors 36 inches (914 mm) wide or less furnish hinges 4-1/2 inches (114 mm) high; doors greater than 36 inches (914 mm) wide furnish hinges 5 inches (127 mm) high, heavy weight or standard weight as specified.

2.4 MORTISE LOCKS – GRADE 1

A. Manufacturers and Products:

1. Scheduled Manufacturer and Product: Schlage L Series-No substitution-To match existing.

B. Requirements:

1. Provide cylindrical locks conforming to ANSI/BHMA A156.2 1. Cylinders: Refer to "KEYING" article, herein.
2. Provide levers with vandal resistant technology for use at heavy traffic or abusive applications. Levers feature internal lock components that prevent damage caused by excessive force from persons kicking, hitting or standing on lever to gain access.
3. Provide locks with standard 2-3/4 inches (70 mm) backset, unless noted otherwise. Provide proper latch throw for UL listing at pairs.
4. Provide locksets with separate anti-rotation thru-bolts, and no exposed screws.
5. Provide standard ASA strikes unless extended lip strikes are necessary to protect trim.

   a. Lever Design: Schlage 06-B.

2.5 EXIT DEVICES (NONE REQUIRED)

A. Manufacturers and Products: NONE REQUIREED FOR THIS PROJECT

   1. Scheduled Manufacturer and Product: Von Duprin 99/33 series.
   2. Acceptable Manufacturers and Products: Sargent 80 series, Precision Apex series.

B. Requirements:

1. Provide exit devices tested to ANSI/BHMA A156.3 Grade 1, and UL listed for Panic Exit or Fire Exit Hardware. Cylinders: Refer to "KEYING" article, herein.
2. Provide touchpad type exit devices, fabricated of brass, bronze, stainless steel, or aluminum, plated to standard architectural finishes to match balance of door hardware.
3. Touchpad: Extend minimum of one half of door width. Match exit device finish, stainless steel for US26, US26D, US28, US32, and US32D finishes; and for all other finishes, provide compatible finish to exit device. Provide compression springs in devices, latches, and outside trims or controls; tension springs also acceptable.
4. Provide exit devices with deadlatching feature for security and for future addition of alarm kits and/or other electrified requirements.
5. Provide exit devices with manufacturer's approved strikes.
6. Provide exit devices cut to door width and height. Locate exit devices at height recommended by exit device manufacturer, allowable by governing building codes, and approved by Architect.
7. Mount mechanism case flush on face of doors, or provide spacers to fill gaps behind devices. Where glass trim or molding projects off face of door, provide glass bead kits.
8. Provide cylinder dogging at non-fire-rated exit devices, unless specified less dogging.
9. Removable Mullions: 2 inches (51 mm) x 3 inches (76 mm) steel tube. Where scheduled as keyed removable mullion that is removed by use of a keyed cylinder, which is self-locking when re-installed.
10. Where lever handles are specified as outside trim for exit devices, provide heavy-duty lever trims with forged or cast escutcheon plates. Provide vandal-resistant levers that will travel to 90-degree down position when more than 35 pounds of torque are applied, and which can easily be re-set.

    a. Lever Style: Match lever style of locksets.

b. Tactile Warning (Knurling): Where required by authority having jurisdiction. Provide on levers on exterior (secure side) of doors serving rooms considered to be hazardous.

11. Provide UL labeled fire exit hardware for fire rated openings.
12. Provide factory drilled weep holes for exit devices used in full exterior application, highly corrosive areas, and where noted in hardware sets.

2.6 CYLINDERS

A. Manufacturer and Product:

1. Scheduled Manufacturer and Product: Medeco-(Large Core cylinders to match existing) key into existing EPIA Security keying system-No substitution.
2. Approved Manufacturers and Products: No Substitute.

B. Requirements:

1. Provide cylinders/cores compliant with ANSI/BHMA A156.5; latest revision, Section 12, Grade 1; permanent cylinders; cylinder face finished to match lockset, manufacturer's series as indicated. Refer to "KEYING" article, herein.
2. Provide cylinders in the following configuration, distributed throughout the Project as indicated.

2.7 KEYING

A. Provide a factory registered keying system, complying with guidelines in ANSI/BHMA A156.28, incorporating decisions made at keying conference.

B. Requirements:

a. Keying system as directed by the Owner.

1. Quantity: Furnish in the following quantities.

a. Change (Day) Keys: 3 per cylinder/core.
b. Permanent Control Keys: 3.
c. Master Keys: 6.
d. Unused balance of key blanks shall be furnished to Owner with the cut keys.

2.8 DOOR CLOSERS :

1. Scheduled Manufacturer and Product: LCN 4040XP series –No substitution-To match existing

B. Requirements:

1. Provide door closers conforming to ANSI/BHMA A156.4 Grade 1 requirements by BHMA certified independent testing laboratory. Stamp units with date of manufacture code.
2. Provide door closers with fully hydraulic, full rack and pinion action with high strength cast iron cylinder, and full complement bearings at shaft.
3. Cylinder Body: 1-1/2 inch (38 mm) diameter, with 5/8 inch (16 mm) diameter double heat-treated pinion journal.
4. Hydraulic Fluid: Fireproof, passing requirements of UL10C, and requiring no seasonal closer adjustment for temperatures ranging from 120 degrees F to -30 degrees F.
5. Spring Power: Continuously adjustable over full range of closer sizes, and providing reduced opening force as required by accessibility codes and standards.
6. Hydraulic Regulation: By tamper-proof, non-critical valves with separate adjustment for latch speed, general speed, and backcheck.
7. Provide closers with a solid forged steel main arms and factory assembled heavy-duty forged forearms for parallel arm closers.
8. Pressure Relief Valve (PRV) Technology: Not permitted.
9. Finish for Closer Cylinders, Arms, Adapter Plates, and Metal Covers: Powder coating finish which has been certified to exceed 100 hours salt spray testing as described in ANSI/BHMA Standard A156.4 and ASTM B117, or has special rust inhibitor (SRI).
10. Provide special templates, drop plates, mounting brackets, or adapters for arms as required for details, overhead stops, and other door hardware items interfering with closer mounting.

2.9 DOOR TRIM

A. Manufacturers:

1. Scheduled Manufacturer: Ives
2. Acceptable Manufacturers: Burns, Rockwood

B. Requirements:

1. Provide push plates 4 inches (102 mm) wide by 16 inches (406 mm) high by 0.050 inch (1 mm) thick and beveled 4 edges. Where width of door stile prevents use of 4 inches (102 mm) wide plate, adjust width to fit.
2. Provide push bars of solid bar stock, diameter and length as scheduled. Provide push bars of sufficient length to span from center to center of each stile. Where required, mount back to back with pull.
3. Provide offset pulls of solid bar stock, diameter and length as scheduled. Where required, mount back to back with push bar.
4. Provide flush pulls as scheduled. Where required, provide back-to-back mounted model.
5. Provide pulls of solid bar stock, diameter and length as scheduled. Where required, mount back to back with push bar.
6. Provide pull plates 4 inches (102 mm) wide by 16 inches (406 mm) high by 0.050 inch (1 mm) thick, beveled 4 edges, and prepped for pull. Where width of door stile prevents use of 4 inches (102 mm) wide plate, adjust width to fit.
7. Provide wire pulls of solid bar stock, diameter and length as scheduled.
8. Provide decorative pulls as scheduled. Where required, mount back to back with pull.

2.10 PROTECTION PLATES

A. Manufacturers:

1. Scheduled Manufacturer: Ives
2. Acceptable Manufacturers: Burns, Rockwood

B. Requirements:

1. Provide kick plates, mop plates, and armor plates minimum of 0.050 inch (1 mm) thick as scheduled. Furnish with sheet metal or wood screws, finished to match plates.
2. Sizes of plates:

   a. Kick Plates: 10 inches (254 mm) high by 2 inches (51 mm) less width of door on single doors, 1 inch (25 mm) less width of door on pairs
   b. Mop Plates: 4 inches (102 mm) high by 2 inches (51 mm) less width of door on single doors, 1 inch (25 mm) less width of door on pairs
   c. Armor Plates: 36 inches (914 mm) high by 2 inches (51 mm) less width of door on single doors, 1 inch (25 mm) less width of door on pairs

2.11 OVERHEAD STOPS AND OVERHEAD STOP/HOLDERS

A. Manufacturers:

1. Scheduled Manufacturers: Glynn-Johnson
2. Acceptable Manufacturers: ABH.

B. Requirements:

1. Provide heavy duty concealed mounted overhead stop or holder as specified for exterior and interior vestibule single acting doors.
2. Provide heavy duty concealed mounted overhead stop or holder as specified for double acting doors.
3. Provide heavy or medium duty and concealed or surface mounted overhead stop or holder for interior doors as specified. Provide medium duty surface mounted overhead stop for interior doors and at any door that swings more than 140 degrees before striking wall, open against equipment, casework, sidelights, and where conditions do not allow wall stop or floor stop presents tripping hazard.
4. Where overhead holders are specified provide friction type at doors without closer and positive type at doors with closer.

2.12 DOOR STOPS AND HOLDERS

A. Manufacturers:

1. Scheduled Manufacturer: Ives
2. Acceptable Manufacturers: Burns, Rockwood

B. Provide door stops at each door leaf:

1. Provide wall stops wherever possible. Provide convex type where mortise type locks are used and concave type where cylindrical type locks are used.
2. Where a wall stop cannot be used, provide universal floor stops for low or high rise options.
3. Where wall or floor stop cannot be used, provide medium duty surface mounted overhead stop.

2.13 THRESHOLDS, SEALS, DOOR SWEEPS, AUTOMATIC DOOR BOTTOMS, AND GASKETING

A. Manufacturers:

1. Scheduled Manufacturer: National Guard
2. Acceptable Manufacturers: Zero International.

B. Requirements:

1. Provide thresholds, weatherstripping (including door sweeps, seals, astragals) and gasketing systems (including smoke, sound, and light) as specified and per architectural details. Match finish of other items.
2. Size of thresholds::

   a. Saddle Thresholds: 1/2 inch (13 mm) high by jamb width by door width
   b. Bumper Seal Thresholds: 1/2 inch (13 mm) high by 5 inches (127 mm) wide by door width

3. Provide door sweeps, seals, astragals, and auto door bottoms only of type where resilient or flexible seal strip is easily replaceable and readily available.

2.14 SILENCERS

A. Manufacturers:

1. Scheduled Manufacturer: Ives
2. Acceptable Manufacturers: Burns, Rockwood

B. Requirements:

1. Provide "push-in" type silencers for hollow metal or wood frames.
2. Provide one silencer per 30 inches (762 mm) of height on each single frame, and two for each pair frame.
3. Omit where gasketing is specified.

2.15 DOOR VIEWERS

A. Manufacturers:

1. Scheduled Manufacturer: Ives
2. Acceptable Manufacturers: Burns, Rockwood

B. Provide appropriate door viewer for door type and rating with minimum of 180-degree view area.

2.16 FINSHES

A. Finish: BHMA 626/652 (US26D); except:

1. Push Plates, Pulls, and Push Bars: BHMA 630 (US32D)
2. Protection Plates: BHMA 630 (US32D)
3. Overhead Stops and Holders: BHMA 630 (US32D)
4. Door Closers: Powder Coat to Match
5. Wall Stops: BHMA 630 (US32D)
6. Latch Protectors: BHMA 630 (US32D)
7. Weatherstripping: Clear Anodized Aluminum
8. Thresholds: Mill Finish Aluminum

PART 3 - EXECUTION

3.1 EXAMINATION

A. Prior to installation of hardware, examine doors and frames, with Hardware subcontractor present, for compliance with requirements for installation tolerances, labeled fire-rated door assembly construction, wall and floor construction, and other conditions affecting performance.

B. Proceed with installation only after unsatisfactory conditions have been corrected.

3.2 PREPARATION

A. Where on-site modification of doors and frames is required:

1. Carefully remove existing door hardware and components being reused. Clean, protect, tag, and store in accordance with storage and handling requirements specified herein.
2. Field modify and prepare existing door and frame for new hardware being installed.
3. When modifications are exposed to view, use concealed fasteners, when possible.
4. Prepare hardware locations and reinstall in accordance with installation requirements for new door hardware and with:

a. Steel Doors and Frames: For surface applied door hardware, drill and tap doors and frames according to ANSI/SDI A250.6.
b. Wood Doors: DHI WDHS.5 "Recommended Hardware Reinforcement Locations for Mineral Core Wood Flush Doors."
c. Doors in rated assemblies: NFPA 80 for restrictions on on-site door hardware preparation.

3.3 INSTALLATION

A. Mounting Heights: The hardware subcontractor shall mount door hardware units at heights to comply with the following, unless otherwise indicated or required to comply with governing regulations.

1. Standard Steel Doors and Frames: ANSI/SDI A250.8.
2. Custom Steel Doors and Frames: HMMA 831.
3. Wood Doors: DHI WDHS.3, "Recommended Locations for Architectural Hardware for Wood Flush Doors."

B. Install each hardware item in compliance with manufacturer’s instructions and recommendations, using only fasteners provided by manufacturer.

C. Do not install surface mounted items until finishes have been completed on substrate. Protect all installed hardware during painting.

D. Set units level, plumb and true to line and location. Adjust and reinforce attachment substrate as necessary for proper installation and operation.

E. Drill and countersink units that are not factory prepared for anchorage fasteners. Space fasteners and anchors according to industry standards.

F. Install operating parts so they move freely and smoothly without binding, sticking, or excessive clearance.

G. Hinges: Install types and in quantities indicated in door hardware schedule but not fewer than quantity recommended by manufacturer for application indicated or one hinge for every 30 inches (750 mm) of door height, whichever is more stringent, unless other equivalent means of support for door, such as spring hinges or pivots, are provided.

H. Lock Cylinders: Install construction cores to secure building and areas during construction period.

1. Replace construction cores with permanent cores as indicated in keying section.

I. Key Control System: Tag keys and place them on markers and hooks in key control system cabinet, as determined by final keying schedule.

J. Door Closers: Mount closers on room side of corridor doors, inside of exterior doors, and stair side of stairway doors from corridors. Closers shall not be visible in corridors, lobbies and other public spaces unless approved by Architect.

K. Thresholds: Set thresholds in full bed of sealant complying with requirements specified in Division 07 Section "Joint Sealants."

L. Stops: Provide floor stops for doors unless wall or other type stops are indicated in door hardware schedule. Do not mount floor stops where they may impede traffic or present tripping hazard.

M. Perimeter Gasketing: Apply to head and jamb, forming seal between door and frame.

N. Meeting Stile Gasketing: Fasten to meeting stiles, forming seal when doors are closed.

O. Door Bottoms: Apply to bottom of door, forming seal with threshold when door is closed.

3.4 FIELD QUALITY CONTROL

A. Architectural Hardware Consultant: Engage Architect's Architectural Hardware Consultant (AHC) to perform inspections and to prepare inspection reports.

1. Architectural Hardware Consultant will inspect door hardware and state in each report whether installed work complies with or deviates from requirements, including whether door hardware is properly installed and adjusted.

3.5 ADJUSTING

A. Initial Adjustment: Adjust and check each operating item of door hardware and each door to ensure proper operation or function of every unit. Replace units that cannot be adjusted to operate as intended. Adjust door control devices to compensate for final operation of heating and ventilating equipment and to comply with referenced accessibility requirements.

1. Door Closers: Adjust sweep period to comply with accessibility requirements and requirements of authorities having jurisdiction.

3.6 CLEANING AND PROTECTION

A. Clean adjacent surfaces soiled by door hardware installation.

B. Clean operating items as necessary to restore proper function and finish.

C. Provide final protection and maintain conditions that ensure door hardware is without damage or deterioration at time of Substantial Completion.

3.7 DEMONSTRATION

A. Provide training for Owner's maintenance personnel to adjust, operate, and maintain door hardware and door hardware finishes. Refer to Division 01 Section "Demonstration and Training."

3.8 DOOR HARDWARE SCHEDULE

A. Locksets, exit devices, and other hardware items are referenced in the following hardware sets for series, type and function. Refer to the above-specifications for special features, options, cylinders/keying, and other requirements.

B. Hardware Sets:

Hardware Sets

SET #001.00

Doors: 004, 010, 012, 013, 014, 030, 034, 034A, 039, 040, 043, 045, 048, 049, 051, 052, 053, 054, 055, 056, 058

NOTE: ALL HARDWARE COMPLETE BY THE DOOR MANUFACTURE.

SET #002.00

Doors: 009B, 009C, 009D, 038A, 042A, 042B, 042C, 042D

NOTE: EXISTING DOOR, FRAME AND HARDWARE. MODIFICATION AND / OR NEW HARDWARE AS REQUIRED FOR INSTALLATION OF ACCESS CONTROL SYSTEM FURNISHED AND INSTALLED BY THE SECURITY SYSTEMS

PROVIDER COMPLETE, AS DIRECTED AND APPROVED BY THE ARCHITECT.

.

SET #003.00

Doors: 005, 008, 009, 011, 021A, 023, 024, 026, 027, 028, 036, 037A, 038, 041, 042

3	Hinges	5BB1HW 4 1/2 x 4 1/2	NRP	630 IV	
1	Lockset	LV9080J 06B 10-072	630	SC	
1	Mortise cylinder	10W0500		MEDE	
1	Electric Strike	6211	US32D	VO	
1	Closer	4040 XP REG/PA TBWMS	AL	LC	
1	Kick Plate	KO050 10" x 34"	630	TR	
1	Floor Stop	FS17	US26D	IV	
1	Power Supply	PS902 900-BBK		VO	
1	Switch	679-05		LO	
1	Gasketing	160 V FATT 1 x 36" 2 x 84"		NA	
1	Drip Cap	16 A FATT 40"		NA	
1	Door Sweep	198 NA 36"			NA
1	Saddle Threshold	425 E 36"	AL	NA	

NOTE: ACCESS CONTROL SYSTEM FURNISHED AND INSTALLED COMPLETE BY SECURITY SYSTEMS PROVIDER.

SET #004.00

Doors: 031, 032, 033, 035, 044, 046, 047

3 Hinges	5BB1HW 4 1/2 x 4 1/2 NRP	630	IV	
1 Lockset	LV9080J 06B 10-072	630	SC	
1 Mortise cylinder	10W0500		MEDE	
1 Electric Strike	6211	US32D	VO	
1 Closer	4040 XP SHCUSH TBSRT	AL	LC	
1 Kick Plate	KO050 10" x 34"	630	TR	
1 Power Supply	PS902 900-BBK		VO	
1 Switch	679-05		LO	
1 Gasketing	160 V FATT 1 x 36" 2 x 84"		NA	
1 Drip Cap	16 A FATT 40"			NA
1 Door Sweep	198 NA 36"			NA
1 Saddle Threshold	425 E 36"	AL	NA	

NOTE: ACCESS CONTROL SYSTEM FURNISHED AND INSTALLED COMPLETE BY THE SECURITY SYSTEMS PROVIDER.

SET #005.00

Doors: 029

6 Hinges	5BB1HW 4 1/2 x 4 1/2 NRP	630	IV
2 Flush Bolt	FB358 12"	US26D	IV
1 Dust Proof Strike	DP2	US26D	IV
1 Lockset	LV9080J 06B 10-072	630	SC
1 Mortise cylinder	10W0500		MEDE
1 Electric Strike	6222	US32D	VO
2 Closer	4040 XP REG/PA TBWMS	AL	LC
2 Kick Plate	KO050 10" x 34"	630	TR
2 Floor Stop	FS17	US26D	IV
1 Power Supply	PS902 900-BBK		VO
1 Switch	679-05		LO
1 Power Transfer	EPT 2	SP28	VO
1 Gasketing	2525 B-20 20'		NA
1 Astragal	139 SS 84"	US32D	NA

NOTE: ACCESS CONTROL SYSTEM FURNISHED AND INSTALLED COMPLETE BY THE SECURITY SYSTEMS PROVIDER.

SET #006.00

Doors: 001, 007, 009A, 020, 025, 036B

3 Hinges	5BB1 4 1/2 x 4 1/2	630	IV
1 Lockset	LV9080J 06B 10-072	630	SC
1 Closer	4040 XP REG/PA TBWMS	AL	LC
1 Kick Plate	KO050 10" x 34"	630	TR
1 Floor Stop	FS17	US26D	IV
1 Gasketing	2525 B 1 x 36" 2 x 84"		NA

SET #007.00

Doors: 015, 037, 041A, 041D

3 Hinges	5BB1 4 1/2 x 4 1/2	630	IV
1 Lockset	LV9080J 06B 10-072	630	SC
1 Floor Stop	FS17	US26D	IV
1 Gasketing	2525 B 1 x 36" 2 x 84"		NA

SET #008.00

Doors: 002, 006, 017, 018, 019, 021, 022, 036A, 041B, 041C, 041E, 041F, 041G, 041H

3 Hinges	5BB1 4 1/2 x 4 1/2	630	IV
1 Lockset	LV9050J 06B 10-072	630	SC
1 Mortise cylinder	10W0500		MEDE
1 Floor Stop	FS17	US26D	IV
1 Gasketing	2525 B 1 x 36" 2 x 84"		NA

SET #009.00

Doors: 003, 016

3 Hinges	5BB1 4 1/2 x 4 1/2	630	IV
1 Passage Set	L9010 06B 10-072	630	SC
1 Closer	4040 XP REG/PA TBWMS	AL	LC
1 Kick Plate	KO050 10" x 34"	630	TR
1 Floor Stop	FS17	US26D	IV
1 Gasketing	2525 B 1 x 36" 2 x 84"		NA

SET #010.00 (Not Used)

Doors: N/A

3 Hinges	5BB1 4 1/2 x 4 1/2	630	IV
1 Lockset	LV9050J 06B 10-072	630	SC
1 Mortise cylinder	10W0500		MEDE

1 Closer	4040 XP REG/PA TBWMS	AL	LC	
1 Kick Plate	KO050 10" x 34"	630	TR	
1 Floor Stop	FS17	US26D	IV	
1 Gasketing	2525 B 1 x 36" 2 x 84"		NA	

SET #011.00

Doors: 050, 057

3 Hinges	5BB1HW 4 1/2 x 4 1/2 NRP	630	IV	
1 Lockset	LV9480J 06B 10-072	630	SC	
1 Mortise cylinder	10W0500		MEDE	
1 Closer	4040 XP SHCUSH TBSRT	AL	LC	
1 Kick Plate	KO050 10" x 34"	630	TR	
1 Wall Stop	WS443	US26D	IV	
1 Gasketing	160 V FATT 1 x 36" 2 x 84"		NA	
1 Drip Cap	16 A FATT 40"			NA
1 Door Sweep	198 NA 36"			NA
1 Saddle Threshold	425 E 36"	AL	NA	

SET #012.00

Doors: 059

3 Hinges	5BB1HW 4 1/2 x 4 1/2 NRP	630	IV	
1 Lockset	LV9480J 06B 10-072	630	SC	
1 Mortise cylinder	10W0500		MEDE	
1 Closer	4040 XP SCUSH TBSRT	AL	LC	
1 Kick Plate	KO050 10" x 34"	630	TR	
1 Wall Stop	WS443	US26D	IV	
1 Door Viewer	976U	625	TR	
1 Gasketing	160 V FATT 1 x 36" 2 x 84"		NA	
1 Drip Cap	16 A FATT 40"			NA
1 Door Sweep	198 NA 36"			NA
1 Saddle Threshold	425 E 36"	AL	NA	

NOTE: PROVIDE 34 inch x 34 inch, DIAMOND PLATED KICK PLATES AT EACH SIDE OF DOORS 026, 027, 028, 029, 031, 032, 033, 035, 036, 038, 038A, 042A, 042B, 044, 046, 047, 050, 057 AND 059 IN LIEU OF WHAT IS SPECIFIED HEREIN.

END OF SECTION

SECTION 088000 - GLAZING

PART 1 - GENERAL

1.1 RELATED DOCUMENTS

A. Drawings and general provisions of the Contract, including General and Supplementary Conditions and Division 01 Specification Sections, apply to this Section.

1.2 SUMMARY

A. This Section includes glazing for the following products and applications, including those specified in other Sections where glazing requirements are specified by reference to this Section:

1. Doors.
2. Glazed entrances.
3. Interior borrowed lites.
4. Exterior windows

B. Related Sections include the following:
1. Division 08 Section "Mirrors."

1.3 DEFINITIONS

A. Manufacturers of Glass Products: Firms that produce primary glass, fabricated glass, or both, as defined in referenced glazing publications.

B. Glass Thicknesses: Indicated by thickness designations in millimeters according to ASTM C 1036.

C. Interspace: Space between lites of an insulating-glass unit that contains dehydrated air or a specified gas.

D. Deterioration of Coated Glass: Defects developed from normal use that are attributed to the manufacturing process and not to causes other than glass breakage and practices for maintaining and cleaning coated glass contrary to manufacturer's written instructions. Defects include peeling, cracking, and other indications of deterioration in metallic coating.

E. Deterioration of Insulating Glass: Failure of hermetic seal under normal use that is attributed to the manufacturing process and not to causes other than glass breakage and practices for maintaining and cleaning insulating glass contrary to manufacturer's written instructions. Evidence of failure is the obstruction of vision by dust, moisture, or film on interior surfaces of glass.

1.4 PERFORMANCE REQUIREMENTS

A. General: Provide glazing systems capable of withstanding normal thermal movement and wind and impact loads (where applicable) without failure, including loss or glass breakage attributable to the following: defective manufacture, fabrication, and installation; failure of sealants or gaskets to remain watertight and airtight; deterioration of glazing materials; or other defects in construction.

B. Glass Design: Glass thickness designations indicated are minimums and are for detailing only. Confirm glass thicknesses by analyzing Project loads and in-service conditions. Provide glass lites in the thickness designations indicated for various size openings, but not less than thicknesses and in strengths (annealed or heat treated) required to meet or exceed the following criteria:

1. Glass Thicknesses: Select minimum glass thicknesses to comply with ASTM E 1300, according to the following requirements:

a. Design Wind Loads: Determine design wind loads applicable to Project from basic wind speed indicated in miles per hour (meters per second) at 33 feet (10 m) above grade, according to ASCE 7, "Minimum Design Loads for Buildings and Other Structures": Section 6.5, "Method 2-Analytical Procedure," based on mean roof heights above grade indicated on Drawings.

1) Basic Wind Speed: 90 mph.
2) Importance Factor: 1.15.
3) Exposure Category: B.

b. Probability of Breakage for Vertical Glazing: 8 lites per 1000 for lites set vertically or not more than 15 degrees off vertical and under wind action.

1) Load Duration: 60 seconds or less.

c. Maximum Lateral Deflection: For the following types of glass supported on all 4 edges, provide thickness required that limits center deflection at design wind pressure to 1/50 times the short side length or 1 inch (25 mm), whichever is less.

1) For monolithic-glass lites heat treated to resist wind loads.
2) For insulating glass.

d. Minimum Glass Thickness for Exterior Lites: Not less than 6.0 mm.
e. Thickness of Tinted and Heat-Absorbing Glass: Provide the same thickness for each tint color indicated throughout Project.

C. Thermal Movements: Provide glazing that allows for thermal movements resulting from the following maximum change (range) in ambient and surface temperatures acting on glass framing members and glazing components. Base engineering calculation on surface temperatures of materials due to both solar heat gain and nighttime-sky heat loss.

1. Temperature Change (Range): 120 deg F (67 deg C), ambient; 180 deg F (100 deg C), material surfaces.

D. Thermal and Optical Performance Properties: Provide glass with performance properties specified based on manufacturer's published test data, as determined according to procedures indicated below:

1. For monolithic-glass lites, properties are based on units with lites 6.0 mm thick.
2. For insulating-glass units, properties are based on units of thickness indicated for overall unit and for each lite.
3. Center-of-Glass Values: Based on using LBL-44789 WINDOW 5.0 computer program for the following methodologies:

a. U-Factors: NFRC 100 expressed as Btu/ sq. ft. x h x deg F (W/sq. m x K).
b. Solar Heat Gain Coefficient: NFRC 200.
c. Solar Optical Properties: NFRC 300.

1.5 SUBMITTALS

A. Product Data: For each glass product and glazing material indicated.

B. Samples: For the following products, in the form of 12-inch- (300-mm-) square Samples for glass.

1. Each color of tinted float glass.
2. Ceramic-coated spandrel glass.
3. Fire rated glass
4. Each pattern and color of ceramic-coated vision glass.
5. Insulating glass for each designation indicated.
6. For each color (except black) of exposed glazing sealant indicated.

C. Glazing Schedule: Use same designations indicated on Drawings for glazed openings in preparing a schedule listing glass types and thicknesses for each size opening and location.

D. Product Certificates: Signed by manufacturers of glass and glazing products certifying that products furnished comply with requirements.

1. For solar-control low-e-coated glass, provide documentation demonstrating that manufacturer of coated glass is certified by coating manufacturer.

E. Qualification Data: For installers.

F. Warranties: Special warranties specified in this Section.

1.6 QUALITY ASSURANCE

A. Installer Qualifications: An experienced installer who has completed glazing similar in material, design, and extent to that indicated for this Project; whose work has resulted in glass installations with a record of successful in-service performance; and who employs glass installers for this Project who are certified under the National Glass Association's Certified Glass Installer Program.

B. Source Limitations for Glass: Obtain the following through one source from a single manufacturer for each glass type: clear float glass coated float glass and insulating glass.

C. Source Limitations for Glass Sputter-Coated with Solar-Control Low-E Coatings: Where solar-control low-e coatings of a primary glass manufacturer that has established a certified fabricator program is specified, obtain sputter-coated solar-control low-e-coated glass in fabricated units from a manufacturer that is certified by coated-glass manufacturer.

D. Source Limitations for Glazing Accessories: Obtain glazing accessories through one source from a single manufacturer for each product and installation method indicated.

E. Elastomeric Glazing Sealant Product Testing: Obtain sealant test results for product test reports in "Submittals" Article from a qualified testing agency based on testing current sealant formulations within a 36-month period.

F. Safety Glazing Products: Comply with testing requirements in 16 CFR 1201 and, for wired glass, ANSI Z97.1.

1. Subject to compliance with requirements, obtain safety glazing products permanently marked with certification label of the Safety Glazing Certification Council or another certification agency acceptable to authorities having jurisdiction.
2. Where glazing units, including Kind FT glass and laminated glass, are specified in Part 2 articles for glazing lites more than 9 sq. ft. (0.84 sq. m) in exposed surface area of one side, provide glazing products that comply with Category II materials, for lites 9 sq. ft. (0.84 sq. m) or less in exposed surface area of one side, provide glazing products that comply with Category I or II materials, except for hazardous locations where Category II materials are required by 16 CFR 1201 and regulations of authorities having jurisdiction.

G. Glazing Publications: Comply with published recommendations of glass product manufacturers and organizations below, unless more stringent requirements are indicated. Refer to these publications for glazing terms not otherwise defined in this Section or in referenced standards.

1. GANA Publications: GANA's "Glazing Manual."
2. IGMA Publication for Insulating Glass: SIGMA TM-3000, "Glazing Guidelines for Sealed Insulating Glass Units."

H. Insulating-Glass Certification Program: Permanently marked either on spacers or on at least one component lite of units with appropriate certification label of the following testing and inspecting agency:

1. Insulating Glass Certification Council.
2. Associated Laboratories, Inc.

I. Preinstallation Conference: Conduct conference at Project site to comply with requirements in Division 01 Section "Project Management and Coordination."

1.7 DELIVERY, STORAGE, AND HANDLING

A. Protect glazing materials according to manufacturer's written instructions and as needed to prevent damage to glass and glazing materials from condensation, temperature changes, direct exposure to sun, or other causes.

B. For insulating-glass units that will be exposed to substantial altitude changes, comply with insulating-glass manufacturer's written recommendations for venting and sealing to avoid hermetic seal ruptures.

1.8 PROJECT CONDITIONS

A. Environmental Limitations: Do not proceed with glazing when ambient and substrate temperature conditions are outside limits permitted by glazing material manufacturers and when glazing channel substrates are wet from rain, frost, condensation, or other causes.

1. Do not install liquid glazing sealants when ambient and substrate temperature conditions are outside limits permitted by glazing sealant manufacturer or below 40 deg F (4.4 deg C).

1.9 WARRANTY

A. Manufacturer's Special Warranty for Coated-Glass Products: Manufacturer's standard form, made out to Owner and signed by coated-glass manufacturer agreeing to replace coated-glass units that deteriorate as defined in "Definitions" Article, f.o.b. the nearest shipping point to Project site, within specified warranty period indicated below.

1. Warranty Period: 10 years from date of Substantial Completion.

B. Manufacturer's Special Warranty on Insulating Glass: Manufacturer's standard form, made out to Owner and signed by insulating-glass manufacturer agreeing to replace insulating-glass units that deteriorate as defined in "Definitions" Article, f.o.b. the nearest shipping point to Project site, within specified warranty period indicated below.

1. Warranty Period: 10 years from date of Substantial Completion.

PART 2 - PRODUCTS

2.1 MANUFACTURERS

A. In other Part 2 articles where titles below introduce lists, the following requirements apply to product selection:

1. Available Products: Subject to compliance with requirements, products that may be incorporated into the Work include, but are not limited to, products specified.
2. Available Manufacturers: Subject to compliance with requirements, manufacturers offering products that may be incorporated into the Work include, but are not limited to, manufacturers specified.

2.2 GLASS PRODUCTS

A. Annealed Float Glass: ASTM C 1036, Type I (transparent flat glass), Quality-Q3; of class indicated.

B. Heat-Treated Float Glass: ASTM C 1048; Type I (transparent flat glass); Quality-Q3; of class, kind, and condition indicated.

1. Fabrication Process: By horizontal (roller-hearth) process with roll-wave distortion parallel to bottom edge of glass as installed, unless otherwise indicated.
2. For uncoated glass, comply with requirements for Condition A.
3. For coated vision glass, comply with requirements for Condition C (other uncoated glass).
4. Provide Kind FT (fully tempered) float glass in place of annealed or Kind HS (heat-strengthened) float glass where safety glass is indicated.

C. Sputter-Coated Float Glass: ASTM C 1376, float glass with metallic-oxide or -nitride coating deposited by vacuum deposition process after manufacture and heat treatment (if any), and complying with other requirements specified.

D. Insulating-Glass Units, General: Factory-assembled units consisting of sealed lites of glass separated by a dehydrated interspace, and complying with ASTM E 774 for Class CBA units and with requirements specified in this Article and in Part 2 "Insulating-Glass Units" Article.

1. Provide Kind HS (heat-strengthened) float glass in place of annealed glass where needed to resist thermal stresses induced by differential shading of individual glass lites and to comply with glass design requirements specified in Part 1 "Performance Requirements" Article.
2. Provide Kind FT (fully tempered) glass lites where safety glass is required by code.
3. Overall Unit Thickness and Thickness of Each Lite: Dimensions indicated for insulating-glass units are nominal and the overall thicknesses of units are measured perpendicularly from outer surfaces of glass lites at unit's edge.
4. Sealing System: Dual seal, with primary and secondary sealants as follows:

   a. Manufacturer's standard sealants.

5. Spacer Specifications: Manufacturer's standard spacer material and construction.

2.3 GLAZING SEALANTS

A. General: Provide products of type indicated, complying with the following requirements:

1. Compatibility: Select glazing sealants that are compatible with one another and with other materials they will contact, including glass products, seals of insulating-glass units, and glazing channel substrates, under conditions of service and application, as demonstrated by sealant manufacturer based on testing and field experience.
2. Suitability: Comply with sealant and glass manufacturers' written instructions for selecting glazing sealants suitable for applications indicated and for conditions existing at time of installation.

3. VOC Content: For sealants used inside of the weatherproofing system, not more than 250 g/L when calculated according to 40 CFR 59, Subpart D (EPA Method 24).
4. Colors of Exposed Glazing Sealants: As selected by Architect from manufacturer's full range.

B. Elastomeric Glazing Sealants: Comply with ASTM C 920 and other requirements indicated for each liquid-applied chemically curing sealant specified, including those referencing ASTM C 920 classifications for type, grade, class, and uses related to exposure and joint substrates.

1. Neutral-Curing Silicone Glazing Sealants:

a. Available Products:

1) Dow Corning Corporation; 791.
2) Dow Corning Corporation; 795.
3) GE Silicones; SilPruf NB SCS9000.
4) GE Silicones; UltraPruf II SCS2900.
5) Pecora Corporation; 865.
6) Pecora Corporation; 895.
7) Pecora Corporation; 898.

b. Type and Grade: S (single component) and NS (nonsag).
c. Class: 50.
d. Use Related to Exposure: NT (nontraffic).
e. Uses Related to Glazing Substrates: M, G, A, and, as applicable to glazing substrates indicated, O.

1) Use O Glazing Substrates: Coated glass, aluminum coated with a high-performance coating.

f. Applications: At all exterior glazed areas.

2.4 MISCELLANEOUS GLAZING MATERIALS

A. General: Provide products of material, size, and shape complying with referenced glazing standard, requirements of manufacturers of glass and other glazing materials for application indicated, and with a proven record of compatibility with surfaces contacted in installation.

B. Cleaners, Primers, and Sealers: Types recommended by sealant or gasket manufacturer.

C. Setting Blocks: Elastomeric material with a Shore, Type A durometer hardness of 85, plus or minus 5.

D. Spacers: Elastomeric blocks or continuous extrusions with a Shore, Type A durometer hardness required by glass manufacturer to maintain glass lites in place for installation indicated.

E. Edge Blocks: Elastomeric material of hardness needed to limit glass lateral movement (side walking).

F. Cylindrical Glazing Sealant Backing: ASTM C 1330, Type O (open-cell material), of size and density to control glazing sealant depth and otherwise produce optimum glazing sealant performance.

2.5 FABRICATION OF GLAZING UNITS

A. Fabricate glazing units in sizes required to glaze openings indicated for Project, with edge and face clearances, edge and surface conditions, and bite complying with written instructions of product manufacturer and referenced glazing publications, to comply with system performance requirements.

B. Clean-cut or flat-grind vertical edges of butt-glazed monolithic lites in a manner that produces square edges with slight kerfs at junctions with outdoor and indoor faces.

C. Grind smooth and polish exposed glass edges and corners.

2.6 MONOLITHIC FLOAT-GLASS UNITS

A. Clear, fully tempered glass

1. Thickness: 1/4 inch

2.7 INSULATING-GLASS UNITS

A. Tinted, Solar Control Low-E Insulating-Glass Units:

1. Overall Unit Thickness and Thickness of Each Lite: 25 and 6.0 mm.
2. Interspace Content: Air.
3. Outdoor Lite: Class 2 (tinted) PPG “Azuria” or equal (contractor to verify Azuria or equal matches existing tinted glazing)

   a. Kind: FT (fully tempered).

4. Indoor Lite: Type I, (transparent glass, flat) Class 1 (clear) float glass with PPG “Solarban 60” solar control Low E coating or equal on #2 surface.

   a. Kind FT (fully tempered).

5. Visible Light Transmittance: 35 percent minimum.
6. Winter Nighttime U-Factor: 0.29 maximum.
7. Summer Daytime U-Factor: 0.28 maximum.
8. Solar Heat Gain Coefficient: 0.39 maximum.
9. Shading Coefficient: 0.33

PART 3 - EXECUTION

3.1 EXAMINATION

A. Examine framing glazing, with Installer present, for compliance with the following:

1. Manufacturing and installation tolerances, including those for size, squareness, and offsets at corners.
2. Presence and functioning of weep system.
3. Minimum required face or edge clearances.
4. Effective sealing between joints of glass-framing members.

B. Proceed with installation only after unsatisfactory conditions have been corrected.

3.2 PREPARATION

A. Clean glazing channels and other framing members receiving glass immediately before glazing. Remove coatings not firmly bonded to substrates.

3.3 GLAZING, GENERAL

A. Comply with combined written instructions of manufacturers of glass, sealants, gaskets, and other glazing materials, unless more stringent requirements are indicated, including those in referenced glazing publications.

B. Glazing channel dimensions, as indicated on Drawings, provide necessary bite on glass, minimum edge and face clearances, and adequate sealant thicknesses, with reasonable tolerances. Adjust as required by Project conditions during installation.

C. Protect glass edges from damage during handling and installation. Remove damaged glass from Project site and legally dispose of off Project site. Damaged glass is glass with edge damage or other imperfections that, when installed, could weaken glass and impair performance and appearance.

D. Apply primers to joint surfaces where required for adhesion of sealants, as determined by preconstruction sealant-substrate testing.

E. Install setting blocks in sill rabbets, sized and located to comply with referenced glazing publications, unless otherwise required by glass manufacturer. Set blocks in thin course of compatible sealant suitable for heel bead.

F. Do not exceed edge pressures stipulated by glass manufacturers for installing glass lites.

G. Provide spacers for glass lites where length plus width is larger than 50 inches (1270 mm) as follows:

1. Locate spacers directly opposite each other on both inside and outside faces of glass. Install correct size and spacing to preserve required face clearances, unless gaskets and

glazing tapes are used that have demonstrated ability to maintain required face clearances and to comply with system performance requirements.

2. Provide 1/8-inch (3-mm) minimum bite of spacers on glass and use thickness equal to sealant width. With glazing tape, use thickness slightly less than final compressed thickness of tape.

H. Provide edge blocking where indicated or needed to prevent glass lites from moving sideways in glazing channel, as recommended in writing by glass manufacturer and according to requirements in referenced glazing publications.

I. Set glass lites in each series with uniform pattern, draw, bow, and similar characteristics.

J. Where wedge-shaped gaskets are driven into one side of channel to pressurize sealant or gasket on opposite side, provide adequate anchorage so gasket cannot walk out when installation is subjected to movement.

K. Square cut wedge-shaped gaskets at corners and install gaskets in a manner recommended by gasket manufacturer to prevent corners from pulling away; seal corner joints and butt joints with sealant recommended by gasket manufacturer.

3.4 GASKET GLAZING (DRY) (AT INTERIOR LOCATIONS ONLY)

A. Fabricate compression gaskets in lengths recommended by gasket manufacturer to fit openings exactly, with allowance for stretch during installation.

B. Insert soft compression gasket between glass and frame or fixed stop so it is securely in place with joints miter cut and bonded together at corners.

C. Center glass lites in openings on setting blocks and press firmly against soft compression gasket by inserting dense compression gaskets formed and installed to lock in place against faces of removable stops. Start gasket applications at corners and work toward centers of openings. Compress gaskets to produce a weathertight seal without developing bending stresses in glass. Seal gasket joints with sealant recommended by gasket manufacturer.

D. Install gaskets so they protrude past face of glazing stops.

3.5 SEALANT GLAZING (WET) (AT ALL EXTERIOR LOCATIONS)

A. Install continuous spacers, or spacers combined with cylindrical sealant backing, between glass lites and glazing stops to maintain glass face clearances and to prevent sealant from extruding into glass channel and blocking weep systems until sealants cure. Secure spacers or spacers and backings in place and in position to control depth of installed sealant relative to edge clearance for optimum sealant performance.

B. Force sealants into glazing channels to eliminate voids and to ensure complete wetting or bond of sealant to glass and channel surfaces.

C. Tool exposed surfaces of sealants to provide a substantial wash away from glass.

3.6 CLEANING AND PROTECTION

A. Protect exterior glass from damage immediately after installation by attaching crossed streamers to framing held away from glass. Do not apply markers to glass surface. Remove nonpermanent labels, and clean surfaces.

B. Protect glass from contact with contaminating substances resulting from construction operations, including weld splatter. If, despite such protection, contaminating substances do come into contact with glass, remove substances immediately as recommended by glass manufacturer.

C. Examine glass surfaces adjacent to or below exterior concrete and other masonry surfaces at frequent intervals during construction, but not less than once a month, for buildup of dirt, scum, alkaline deposits, or stains; remove as recommended in writing by glass manufacturer.

D. Remove and replace glass that is broken, chipped, cracked, or abraded or that is damaged from natural causes, accidents, and vandalism, during construction period.

E. Wash glass on both exposed surfaces in each area of Project not more than four days before date scheduled for inspections that establish date of Substantial Completion. Wash glass as recommended in writing by glass manufacturer.

END OF SECTION 088000

SECTION 092216 - NON-STRUCTURAL METAL FRAMING

PART 1 - GENERAL

1.1 RELATED DOCUMENTS

A. Drawings and general provisions of the Contract, including General and Supplementary Conditions and Division 01 Specification Sections, apply to this Section.

1.2 SUMMARY

A. This Section includes non-load-bearing steel framing members for the following applications:

1. Interior framing systems (e.g., supports for partition walls, framed soffits, furring, etc.).
2. Interior suspension systems (e.g., supports for ceilings, suspended soffits, etc.).

B. Related Sections include the following:

1. Division 05 Section "Cold-Formed Metal Framing" for exterior and interior load-bearing and exterior non-load-bearing wall studs; floor joists; roof rafters and ceiling joists; and roof trusses.
2. Division 07 Section "Fire-Resistive Joint Systems" for head-of-wall joint systems installed with non-load-bearing steel framing.
3. Division 09 Section “Gypsum Board” for panels installed on metal framing.
4. Division 09 Section "Gypsum Board Shaft Wall Assemblies" for non-load-bearing metal shaft-wall framing, gypsum panels, and other components of shaft-wall assemblies.

1.3 SUBMITTALS

A. Product Data: For each type of product indicated.

1.4 QUALITY ASSURANCE

A. Fire-Test-Response Characteristics: For fire-resistance-rated assemblies that incorporate non-load-bearing steel framing, provide materials and construction identical to those tested in assembly indicated according to ASTM E 119 by an independent testing agency.

B. STC-Rated Assemblies: For STC-rated assemblies, provide materials and construction identical to those tested in assembly indicated according to ASTM E 90 and classified according to ASTM E 413 by an independent testing agency.

PART 2 - PRODUCTS

2.1 NON-LOAD-BEARING STEEL FRAMING, GENERAL

A. Recycled Content of Steel Products: Provide products with average recycled content of steel products such that postconsumer recycled content plus one-half of preconsumer recycled content is not less than 25 percent.

B. Framing Members, General: Comply with ASTM C 754 for conditions indicated.

1. Steel Sheet Components: Comply with ASTM C 645 requirements for metal, unless otherwise indicated.
2. Protective Coating: ASTM A 653/A 653M, G40 (Z120), hot-dip galvanized, unless otherwise indicated.

2.2 SUSPENSION SYSTEM COMPONENTS

A. Tie Wire: ASTM A 641/A 641M, Class 1 zinc coating, soft temper, 0.0625-inch- (1.59-mm-) diameter wire, or double strand of 0.0475-inch- (1.21-mm-) diameter wire.

B. Wire Hangers: ASTM A 641/A 641M, Class 1 zinc coating, soft temper, 0.162-inch (4.12-mm) diameter.

C. Carrying Channels: Cold-rolled, commercial-steel sheet with a base-metal thickness of 0.0538 inch (1.37 mm) and minimum 1/2-inch- (12.7-mm-) wide flanges.

1. Depth: As indicated on Drawings or 1-1/2 inches (38 mm).

D. Furring Channels (Furring Members):

1. Hat-Shaped, Rigid Furring Channels: ASTM C 645, 7/8 inch (22.2 mm) deep.

a. Minimum Base Metal Thickness: 0.0179 inch (0.45 mm).

E. Grid Suspension System for Ceilings: ASTM C 645, direct-hung system composed of main beams and cross-furring members that interlock.

1. Available Products: Subject to compliance with requirements, products that may be incorporated into the Work include, but are not limited to, the following:

a. Armstrong World Industries, Inc.; Drywall Grid Systems.
b. Chicago Metallic Corporation; 640-C Drywall Furring System.
c. USG Corporation; Drywall Suspension System.

2.3 STEEL FRAMING FOR FRAMED ASSEMBLIES

A. Steel Studs and Runners: ASTM C 645.

1. Minimum Base-Metal Thickness: 0.0179 inch (0.45 mm).

2. Depth: As indicated on Drawings.

B. Flat Strap and Backing Plate: Steel sheet for blocking and bracing in length and width indicated.

1. Minimum Base-Metal Thickness: 0.0312 inch (0.79 mm).

C. Cold-Rolled Channel Bridging: 0.0538-inch (1.37-mm) bare-steel thickness, with minimum 1/2-inch- (12.7-mm-) wide flanges.

1. Depth: 1-1/2 inches (38.1 mm).

D. Hat-Shaped, Rigid Furring Channels: ASTM C 645.

1. Minimum Base Metal Thickness: 0.0179 inch (0.45 mm).
2. Depth: 7/8 inch (22.2 mm).

E. Cold-Rolled Furring Channels: 0.0538-inch (1.37-mm) bare-steel thickness, with minimum 1/2-inch- (12.7-mm-) wide flanges.

1. Depth: 3/4 inch (19.1 mm).
2. Furring Brackets: Adjustable, corrugated-edge type of steel sheet with minimum bare-steel thickness of 0.0312 inch (0.79 mm).
3. Tie Wire: ASTM A 641/A 641M, Class 1 zinc coating, soft temper, 0.0625-inch- (1.59-mm-) diameter wire, or double strand of 0.0475-inch- (1.21-mm-) diameter wire.

F. Z-Shaped Furring: With slotted or nonslotted web, face flange of 1-1/4 inches (31.8 mm), wall attachment flange of 7/8 inch (22.2 mm), minimum bare-metal thickness of 0.0179 inch (0.45 mm), and depth required to fit insulation thickness indicated.

2.4 AUXILIARY MATERIALS

A. General: Provide auxiliary materials that comply with referenced installation standards.

1. Fasteners for Metal Framing: Of type, material, size, corrosion resistance, holding power, and other properties required to fasten steel members to substrates.

B. Isolation Strip at Exterior Walls: Provide one of the following:

1. Asphalt-Saturated Organic Felt: ASTM D 226, Type I (No. 15 asphalt felt), nonperforated.
2. Foam Gasket: Adhesive-backed, closed-cell vinyl foam strips that allow fastener penetration without foam displacement, 1/8 inch (3.2 mm) thick, in width to suit steel stud size.

PART 3 - EXECUTION

3.1 EXAMINATION

A. Examine areas and substrates, with Installer present, and including welded hollow-metal frames, cast-in anchors, and structural framing, for compliance with requirements and other conditions affecting performance.

1. Proceed with installation only after unsatisfactory conditions have been corrected.

3.2 PREPARATION

A. Suspended Assemblies: Coordinate installation of suspension systems with installation of overhead structure to ensure that inserts and other provisions for anchorages to building structure have been installed to receive hangers at spacing required to support the Work and that hangers will develop their full strength.

B. Coordination with Sprayed Fire-Resistive Materials:

1. Before sprayed fire-resistive materials are applied, attach offset anchor plates or ceiling runners (tracks) to surfaces indicated to receive sprayed fire-resistive materials. Where offset anchor plates are required, provide continuous plates fastened to building structure not more than 24 inches (600 mm) o.c.
2. After sprayed fire-resistive materials are applied, remove them only to extent necessary for installation of non-load-bearing steel framing. Do not reduce thickness of fire-resistive materials below that required for fire-resistance ratings indicated. Protect adjacent fire-resistive materials from damage.

3.3 INSTALLATION, GENERAL

A. Installation Standard: ASTM C 754, except comply with framing sizes and spacing indicated.

1. Gypsum Board Assemblies: Also comply with requirements in ASTM C 840 that apply to framing installation.

B. Install supplementary framing, and blocking to support fixtures, equipment services, heavy trim, grab bars, toilet accessories, furnishings, or similar construction.

C. Install bracing at terminations in assemblies.

D. Do not bridge building control and expansion joints with non-load-bearing steel framing members. Frame both sides of joints independently.

3.4 INSTALLING SUSPENSION SYSTEMS

A. Install suspension system components in sizes and spacings indicated on Drawings, but not less than those required by referenced installation standards for assembly types and other assembly components indicated.

B. Isolate suspension systems from building structure where they abut or are penetrated by building structure to prevent transfer of loading imposed by structural movement.

C. Suspend hangers from building structure as follows:

1. Install hangers plumb and free from contact with insulation or other objects within ceiling plenum that are not part of supporting structural or suspension system.

a. Splay hangers only where required to miss obstructions and offset resulting horizontal forces by bracing, countersplaying, or other equally effective means.

2. Where width of ducts and other construction within ceiling plenum produces hanger spacings that interfere with locations of hangers required to support standard suspension system members, install supplemental suspension members and hangers in the form of trapezes or equivalent devices.

a. Size supplemental suspension members and hangers to support ceiling loads within performance limits established by referenced installation standards.

3. Wire Hangers: Secure by looping and wire tying, either directly to structures or to inserts, eye screws, or other devices and fasteners that are secure and appropriate for substrate, and in a manner that will not cause hangers to deteriorate or otherwise fail.
4. otherwise fail.
5. Do not attach hangers to steel roof deck.
6. Do not attach hangers to permanent metal forms. Furnish cast-in-place hanger inserts that extend through forms.
7. Do not attach hangers to rolled-in hanger tabs of composite steel floor deck.
8. Do not connect or suspend steel framing from ducts, pipes, or conduit.

D. Fire-Resistance-Rated Assemblies: Wire tie furring channels to supports.

E. Seismic Bracing: Sway-brace suspension systems with hangers used for support.

F. Grid Suspension Systems: Attach perimeter wall track or angle where grid suspension systems meet vertical surfaces. Mechanically join main beam and cross-furring members to each other and butt-cut to fit into wall track.

G. Installation Tolerances: Install suspension systems that are level to within 1/8 inch in 12 feet (3 mm in 3.6 m) measured lengthwise on each member that will receive finishes and transversely between parallel members that will receive finishes.

3.5 INSTALLING FRAMED ASSEMBLIES

A. Where studs are installed directly against exterior masonry walls or dissimilar metals at exterior walls, install isolation strip between studs and exterior wall.

B. Install studs so flanges within framing system point in same direction.

1. Space studs as follows:

a. Single-Layer Application: 16 inches (406 mm) o.c., unless otherwise indicated.

b. Multilayer Application: 16 inches (406 mm) o.c., unless otherwise indicated.
c. Tile backing panels: 16 inches (406 mm) o.c., unless otherwise indicated.

C. Install tracks (runners) at floors and overhead supports. Extend framing full height to structural supports or substrates above suspended ceilings, except where partitions are indicated to terminate at suspended ceilings. Continue framing around ducts penetrating partitions above ceiling.

1. Slip-Type Head Joints: Where framing extends to overhead structural supports, install to produce joints at tops of framing systems that prevent axial loading of finished assemblies.
2. Door Openings: Screw vertical studs at jambs to jamb anchor clips on door frames; install runner track section (for cripple studs) at head and secure to jamb studs.

a. Install two studs at each jamb, unless otherwise indicated.
b. Install cripple studs at head adjacent to each jamb stud, with a minimum 1/2-inch (12.7-mm) clearance from jamb stud to allow for installation of control joint in finished assembly.
c. Extend jamb studs through suspended ceilings and attach to underside of overhead structure.

3. Other Framed Openings: Frame openings other than door openings the same as required for door openings, unless otherwise indicated. Install framing below sills of openings to match framing required above door heads.
4. Fire-Resistance-Rated Partitions: Install framing to comply with fire-resistance-rated assembly indicated and support closures and to make partitions continuous from floor to underside of solid structure.

a. Firestop Track: Where indicated, install to maintain continuity of fire-resistance-rated assembly indicated.

5. Curved Partitions:

a. Bend track to uniform curve and locate straight lengths so they are tangent to arcs.
b. Begin and end each arc with a stud, and space intermediate studs equally along arcs. On straight lengths of not less than 2 studs at ends of arcs, place studs 6 inches (150 mm) o.c.

D. Direct Furring:

1. Attach to concrete or masonry with stub nails, screws designed for masonry attachment, or powder-driven fasteners spaced 24 inches (610 mm) o.c.

E. Installation Tolerance: Install each framing member so fastening surfaces vary not more than 1/8 inch (3 mm) from the plane formed by faces of adjacent framing.

END OF SECTION 092216

SECTION 092900 - GYPSUM BOARD

PART 1 - GENERAL

1.1 RELATED DOCUMENTS

A. Drawings and general provisions of the Contract, including General and Supplementary Conditions and Division 01 Specification Sections, apply to this Section.

1.2 SUMMARY

A. This Section includes the following:

1. Interior gypsum board.
2. Exterior gypsum board for ceilings and soffits.
3. Tile backing panels.
4. Sound Attenuation Blankets

B. Related Sections include the following:
1. Division 06 Section "Rough Carpentry" for wood framing and furring that supports gypsum board.
2. Division 06 Section "Sheathing" for gypsum sheathing.
3. Division 07 Section "Thermal Insulation" for insulation and vapor retarders installed in assemblies that incorporate gypsum board.
4. Division 07 Section "Fire-Resistive Joint Systems" for head-of-wall assemblies that incorporate gypsum board.
5. Division 09 Section "Non-Structural Metal Framing" for non-structural framing and suspension systems that support gypsum board.
6. Division 09 Section "Gypsum Board Shaft Wall Assemblies" for metal shaft-wall framing, gypsum shaft liners, and other components of shaft-wall assemblies.
7. Division 09 painting Sections for primers applied to gypsum board surfaces.

1.3 SUBMITTALS

A. Product Data: For each type of product indicated.

1.4 QUALITY ASSURANCE

A. Fire-Resistance-Rated Assemblies: For fire-resistance-rated assemblies, provide materials and construction identical to those tested in assembly indicated according to ASTM E 119 by an independent testing agency.

1.5 STORAGE AND HANDLING

A. Store materials inside under cover and keep them dry and protected against damage from weather, condensation, direct sunlight, construction traffic, and other causes. Stack panels flat to prevent sagging.

1.6 PROJECT CONDITIONS

A. Environmental Limitations: Comply with ASTM C 840 requirements or gypsum board manufacturer's written recommendations, whichever are more stringent.

B. Do not install interior products until installation areas are enclosed and conditioned.

C. Do not install panels that are wet, those that are moisture damaged, and those that are mold damaged.

1. Indications that panels are wet or moisture damaged include, but are not limited to, discoloration, sagging, or irregular shape.
2. Indications that panels are mold damaged include, but are not limited to, fuzzy or splotchy surface contamination and discoloration.

PART 2 - PRODUCTS

2.1 PANELS, GENERAL

A. Recycled Content: Provide gypsum panel products with recycled content such that postconsumer recycled content plus one-half of preconsumer recycled content constitutes a minimum of 20 percent by weight.

B. Size: Provide in maximum lengths and widths available that will minimize joints in each area and that correspond with support system indicated.

2.2 INTERIOR GYPSUM BOARD

A. General: Complying with ASTM C 36/C 36M or ASTM C 1396/C 1396M, as applicable to type of gypsum board indicated and whichever is more stringent.

1. Available Manufacturers: Subject to compliance with requirements, manufacturers offering products that may be incorporated into the Work include, but are not limited to, the following:

a. American Gypsum Co.
b. BPB America Inc.
c. G-P Gypsum.
d. Lafarge North America Inc.
e. National Gypsum Company.
f. PABCO Gypsum.
g. Temple.

h. USG Corporation.

B. Type X:

1. Thickness: 5/8 inch (15.9 mm).
2. Long Edges: Tapered.

C. Type C:

1. Thickness: As required by fire-resistance-rated assembly indicated on Drawings.
2. Long Edges: Tapered.

D. Ceiling Type: Manufactured to have more sag resistance than regular-type gypsum board.

1. Thickness: 1/2 inch (12.7 mm).
2. Long Edges: Tapered.

E. Moisture- and Mold-Resistant Type: With moisture- and mold-resistant core and surfaces.

1. Core: 5/8 inch (15.9 mm), Type X.
2. Long Edges: Tapered.

2.3 EXTERIOR GYPSUM BOARD FOR CEILINGS AND SOFFITS

A. Exterior Gypsum Soffit Board: ASTM C 931/C 931M or ASTM C 1396/C 1396M, with manufacturer's standard edges.

1. Available Manufacturers: Subject to compliance with requirements, manufacturers offering products that may be incorporated into the Work include, but are not limited to, the following:

a. American Gypsum Co.
b. BPB America Inc.
c. G-P Gypsum.
d. Lafarge North America Inc.
e. National Gypsum Company.
f. PABCO Gypsum.
g. Temple.
h. USG Corporation.

2. Core: 5/8 inch (15.9 mm), Type X.

2.4 TILE BACKING PANELS

A. Water-Resistant Gypsum Backing Board (install only at restrooms, showers, food preparation areas, food serving areas, drinking fountains, mop sinks): ASTM C 630/C 630M or ASTM C 1396/C 1396M.

1. Available Manufacturers: Subject to compliance with requirements, manufacturers offering products that may be incorporated into the Work include, but are not limited to, the following:

   a. American Gypsum Co.
   b. BPB America Inc.
   c. G-P Gypsum.
   d. Lafarge North America Inc.
   e. National Gypsum Company.
   f. PABCO Gypsum.
   g. Temple.
   h. USG Corporation.

2. Core: 5/8 inch (15.9 mm), Type X.

2.5 TRIM ACCESSORIES

A. Interior Trim: ASTM C 1047.

1. Material: Hot-dip galvanized steel sheet, plastic, or rolled zinc.
2. Shapes:

   a. Cornerbead.
   b. Bullnose bead.
   c. LC-Bead: J-shaped; exposed long flange receives joint compound.
   d. Expansion (control) joint.

B. Exterior Trim: ASTM C 1047.

1. Material: Hot-dip galvanized steel sheet, plastic, or rolled zinc.
2. Shapes:

   a. Cornerbead.
   b. LC-Bead: J-shaped; exposed long flange receives joint compound.
   c. Expansion (Control) Joint: One-piece, rolled zinc with V-shaped slot and removable strip covering slot opening.

C. Aluminum Trim: Extruded accessories of profiles and dimensions indicated.

1. Available Manufacturers: Subject to compliance with requirements, manufacturers offering products that may be incorporated into the Work include, but are not limited to, the following:

   a. Fry Reglet Corp.
   b. Gordon, Inc.
   c. Pittcon Industries.

2. Aluminum: Alloy and temper with not less than the strength and durability properties of ASTM B 221 (ASTM B 221M), Alloy 6063-T5.

3. Finish: Corrosion-resistant primer compatible with joint compound and finish materials specified.

2.6 JOINT TREATMENT MATERIALS

A. General: Comply with ASTM C 475/C 475M.

B. Joint Tape:

1. Interior Gypsum Wallboard: Paper.
2. Exterior Gypsum Soffit Board: Paper.
3. Tile Backing Panels: As recommended by panel manufacturer.

C. Joint Compound for Interior Gypsum Wallboard: For each coat use formulation that is compatible with other compounds applied on previous or for successive coats.

1. Prefilling: At open joints and damaged surface areas, use setting-type taping compound.
2. Embedding and First Coat: For embedding tape and first coat on joints, fasteners, and trim flanges, use drying-type, all-purpose compound.

a. Use setting-type compound for installing paper-faced metal trim accessories.

3. Fill Coat: For second coat, use drying-type, all-purpose compound.
4. Finish Coat: For third coat, use setting-type, sandable topping compound.

D. Joint Compound for Exterior Applications:

1. Exterior Gypsum Soffit Board: Use setting-type taping compound and setting-type, sandable topping compound.

E. Joint Compound for Tile Backing Panels:

1. Water-Resistant Gypsum Backing Board: Use setting-type taping compound and setting-type, sandable topping compound.

2.7 AUXILIARY MATERIALS

A. General: Provide auxiliary materials that comply with referenced installation standards and manufacturer's written recommendations.

B. Laminating Adhesive: Adhesive or joint compound recommended for directly adhering gypsum panels to continuous substrate.

1. Use adhesives that have a VOC content of 50 g/L or less when calculated according to 40 CFR 59, Subpart D (EPA Method 24).

C. Steel Drill Screws: ASTM C 1002, unless otherwise indicated.

1. Use screws complying with ASTM C 954 for fastening panels to steel members from 0.033 to 0.112 inch (0.84 to 2.84 mm) thick.

D. Sound Attenuation Blankets: ASTM C 665, Type I (blankets without membrane facing), 3" thickness, produced by combining thermosetting resins with mineral fibers manufactured from glass, slag wool, or rock wool. USG "Thermafiber" or approved equal.

1. Fire-Resistance-Rated Assemblies: Comply with mineral-fiber requirements of assembly.
2. Recycled Content: Provide blankets with recycled content such that postconsumer recycled content plus one-half of preconsumer recycled content constitutes a minimum of 25 percent by weight.

E. Acoustical Sealant: As specified in Division 07 Section "Joint Sealants."

1. Provide sealants that have a VOC content of 250 g/L or less when calculated according to 40 CFR 59, Subpart D (EPA Method 24).

F. Thermal Insulation: As specified in Division 07 Section "Thermal Insulation."

PART 3 - EXECUTION

3.1 EXAMINATION

A. Examine areas and substrates, with Installer present, and including welded hollow-metal frames and framing, for compliance with requirements and other conditions affecting performance.

B. Examine panels before installation. Reject panels that are wet, moisture damaged, and mold damaged.

C. Proceed with installation only after unsatisfactory conditions have been corrected.

3.2 APPLYING AND FINISHING PANELS, GENERAL

A. Sound Attenuation Blankets: Install blankets after first layer of gypsum board has been installed on metal studs and before opposite side panels are installed. Insert blanket in the stud cavity by bowing blanket slightly. After inserting, slit the blanket with a sharp utility knife to ease the pressure of blanket against the gypsum panels. Butt ends of blankets closely together, filling entire cavity.

B. Comply with ASTM C 840.

C. Install ceiling panels across framing to minimize the number of abutting end joints and to avoid abutting end joints in central area of each ceiling. Stagger abutting end joints of adjacent panels not less than one framing member.

D. Install panels with face side out. Butt panels together for a light contact at edges and ends with not more than 1/16 inch (1.5 mm) of open space between panels. Do not force into place.

E. Locate edge and end joints over supports, except in ceiling applications where intermediate supports or gypsum board back-blocking is provided behind end joints. Do not place tapered

edges against cut edges or ends. Stagger vertical joints on opposite sides of partitions. Do not make joints other than control joints at corners of framed openings.

F. Form control and expansion joints with space between edges of adjoining gypsum panels.

G. Cover both faces of support framing with gypsum panels in concealed spaces (above ceilings, etc.), except in chases braced internally.

1. Unless concealed application is indicated or required for sound, fire, air, or smoke ratings, coverage may be accomplished with scraps of not less than 8 sq. ft. (0.7 sq. m) in area.
2. Fit gypsum panels around ducts, pipes, and conduits.
3. Where partitions intersect structural members projecting below underside of floor/roof slabs and decks, cut gypsum panels to fit profile formed by structural members; allow 1/4- to 3/8-inch- (6.4- to 9.5-mm-) wide joints to install sealant.

H. Isolate perimeter of gypsum board applied to non-load-bearing partitions at structural abutments, except floors. Provide 1/4- to 1/2-inch- (6.4- to 12.7-mm-) wide spaces at these locations, and trim edges with edge trim where edges of panels are exposed. Seal joints between edges and abutting structural surfaces with acoustical sealant.

I. Attachment to Steel Framing: Attach panels so leading edge or end of each panel is attached to open (unsupported) edges of stud flanges first.

3.3 APPLYING INTERIOR GYPSUM BOARD

A. Install interior gypsum board in the following locations:

1. Type X: As indicated on Drawings at Vertical surfaces, unless otherwise indicated.
2. Ceiling Type: Ceiling surfaces.
3. Abuse-Resistant Type: As indicated on Drawings.

B. Single-Layer Application:

1. On ceilings, apply gypsum panels before wall/partition board application to greatest extent possible and at right angles to framing, unless otherwise indicated.
2. On partitions/walls, apply gypsum panels vertically (parallel to framing), unless otherwise indicated or required by fire-resistance-rated assembly, and minimize end joints.

   a. Stagger abutting end joints not less than one framing member in alternate courses of panels.
   b. At stairwells and other high walls, install panels horizontally, unless otherwise indicated or required by fire-resistance-rated assembly.

3. On Z-furring members, apply gypsum panels vertically (parallel to framing) with no end joints. Locate edge joints over furring members.
4. Fastening Methods: Apply gypsum panels to supports with steel drill screws.

C. Multilayer Application:

1. On partitions/walls, apply gypsum board indicated for base layers and face layers vertically (parallel to framing) with joints of base layers located over stud or furring member and face-layer joints offset at least one stud or furring member with base-layer joints, unless otherwise indicated or required by fire-resistance-rated assembly. Stagger joints on opposite sides of partitions.
2. Fastening Methods: Fasten base layers with screws; fasten face layers with adhesive and supplementary fasteners.

D. Laminating to Substrate: Where gypsum panels are indicated as directly adhered to a substrate (other than studs, joists, furring members, or base layer of gypsum board), comply with gypsum board manufacturer's written recommendations and temporarily brace or fasten gypsum panels until fastening adhesive has set.

E. Curved Surfaces:

1. Install panels horizontally (perpendicular to supports) and unbroken, to extent possible, across curved surface plus 12-inch- (300-mm-) long straight sections at ends of curves and tangent to them.
2. For double-layer construction, fasten base layer to studs with screws 16 inches (400 mm) o.c. Center gypsum board face layer over joints in base layer, and fasten to studs with screws spaced 12 inches (300 mm) o.c.

3.4 APPLYING EXTERIOR GYPSUM PANELS FOR CEILINGS AND SOFFITS

A. Apply panels perpendicular to supports, with end joints staggered and located over supports.

1. Install with 1/4-inch (6.4-mm) open space where panels abut other construction or structural penetrations.
2. Fasten with corrosion-resistant screws.

3.5 APPLYING TILE BACKING PANELS

A. Water-Resistant Gypsum Backing Board: Install at showers, tubs, and where indicated. Install with 1/4-inch (6.4-mm) gap where panels abut other construction or penetrations.

B. Where tile backing panels abut other types of panels in same plane, shim surfaces to produce a uniform plane across panel surfaces.

3.6 INSTALLING TRIM ACCESSORIES

A. General: For trim with back flanges intended for fasteners, attach to framing with same fasteners used for panels. Otherwise, attach trim according to manufacturer's written instructions.

B. Control Joints: Install control joints according to ASTM C 840 and in specific locations approved by Architect for visual effect.

C. Interior Trim: Install in the following locations:

1. Cornerbead: Use at outside corners, unless otherwise indicated.
2. Bullnose Bead: Use at outside corners.
3. LC-Bead: Use at exposed panel edges.
4. Curved-Edge Cornerbead: Use at curved openings.

D. Exterior Trim: Install in the following locations:

1. Cornerbead: Use at outside corners.
2. LC-Bead: Use at exposed panel edges.

E. Aluminum Trim: Install in locations indicated on Drawings.

3.7 FINISHING GYPSUM BOARD

A. General: Treat gypsum board joints, interior angles, edge trim, control joints, penetrations, fastener heads, surface defects, and elsewhere as required to prepare gypsum board surfaces for decoration. Promptly remove residual joint compound from adjacent surfaces.

B. Prefill open joints and damaged surface areas.

C. Apply joint tape over gypsum board joints, except those with trim having flanges not intended for tape.

D. Gypsum Board Finish Levels: Finish panels to levels indicated below and according to ASTM C 840:

1. Level 1: Ceiling plenum areas, concealed areas, and where indicated.
2. Level 2: Panels that are substrate for tile.
3. Level 3: Where indicated on Drawings.
4. Level 4: At panel surfaces that will be exposed to view, unless otherwise indicated.

   a. Primer and its application to surfaces are specified in other Division 09 Sections.

3.8 PROTECTION

A. Protect installed products from damage from weather, condensation, direct sunlight, construction, and other causes during remainder of the construction period.

B. Remove and replace panels that are wet, moisture damaged, and mold damaged.

1. Indications that panels are wet or moisture damaged include, but are not limited to, discoloration, sagging, or irregular shape.
2. Indications that panels are mold damaged include, but are not limited to, fuzzy or splotchy surface contamination and discoloration.

END OF SECTION 092900

SECTION 095113 - ACOUSTICAL PANEL CEILINGS

PART 1 - GENERAL

1.1 RELATED DOCUMENTS

A. Drawings and general provisions of the Contract, including General and Supplementary Conditions and Division 01 Specification Sections, apply to this Section.

1.2 SUMMARY

A. This Section includes acoustical panels and exposed suspension systems for ceilings.

1.3 DEFINITIONS

A. AC: Articulation Class.

B. CAC: Ceiling Attenuation Class.

C. LR: Light Reflectance coefficient.

D. NRC: Noise Reduction Coefficient.

1.4 SUBMITTALS

A. Product Data: For each type of product indicated.

B. Samples for Initial Selection: For components with factory-applied color finishes.

C. Samples for Verification: For each component indicated and for each exposed finish required, prepared on Samples of size indicated below.

1. Acoustical Panel: Set of 6-inch- (150-mm-) square Samples of each type, color, pattern, and texture.
2. Exposed Suspension System Members, Moldings, and Trim: Set of 12-inch- (300-mm-) long Samples of each type, finish, and color.

D. Product Test Reports: Based on evaluation of comprehensive tests performed by a qualified testing agency, for each acoustical panel ceiling.

E. Maintenance Data: For finishes to include in maintenance manuals.

1.5 QUALITY ASSURANCE

A. Acoustical Testing Agency Qualifications: An independent testing laboratory, or an NVLAP-accredited laboratory, with the experience and capability to conduct the testing indicated. NVLAP-accredited laboratories must document accreditation, based on a "Certificate of Accreditation" and a "Scope of Accreditation" listing the test methods specified.

B. Source Limitations:

1. Acoustical Ceiling Panel: Obtain each type through one source from a single manufacturer.
2. Suspension System: Obtain each type through one source from a single manufacturer.

C. Fire-Test-Response Characteristics: Provide acoustical panel ceilings that comply with the following requirements:

1. Surface-Burning Characteristics: Provide acoustical panels with the following surface-burning characteristics complying with ASTM E 1264 for Class A materials as determined by testing identical products per ASTM E 84:

a. Smoke-Developed Index: 450 or less.

D. Seismic Standard: Provide acoustical panel ceilings designed and installed to withstand the effects of earthquake motions according to the following:

1. CISCA's Recommendations for Acoustical Ceilings: Comply with CISCA's "Recommendations for Direct-Hung Acoustical Tile and Lay-in Panel Ceilings--Seismic Zones 0-2."

E. Preinstallation Conference: Conduct conference at Project site to comply with requirements in Division 01 Section "Project Management and Coordination."

1.6 DELIVERY, STORAGE, AND HANDLING

A. Deliver acoustical panels, suspension system components, and accessories to Project site in original, unopened packages and store them in a fully enclosed, conditioned space where they will be protected against damage from moisture, humidity, temperature extremes, direct sunlight, surface contamination, and other causes.

B. Before installing acoustical panels, permit them to reach room temperature and a stabilized moisture content.

C. Handle acoustical panels carefully to avoid chipping edges or damaging units in any way.

1.7 PROJECT CONDITIONS

A. Environmental Limitations: Do not install acoustical panel ceilings until spaces are enclosed and weatherproof, wet work in spaces is complete and dry, work above ceilings is complete, and ambient temperature and humidity conditions are maintained at the levels indicated for Project when occupied for its intended use.

1. Pressurized Plenums: Operate ventilation system for not less than 48 hours before beginning acoustical panel ceiling installation.

1.8 COORDINATION

A. Coordinate layout and installation of acoustical panels and suspension system with other construction that penetrates ceilings or is supported by them, including light fixtures, HVAC equipment, fire-suppression system, and partition assemblies.

1.9 EXTRA MATERIALS

A. Furnish extra materials described below that match products installed and that are packaged with protective covering for storage and identified with labels describing contents.

1. Acoustical Ceiling Panels: Full-size panels equal to one percent of quantity installed.
2. Suspension System Components: Quantity of each exposed component equal to one percent of quantity installed.

PART 2 - PRODUCTS

2.1 ACOUSTICAL PANELS, GENERAL

A. Acoustical Panel Standard: Provide manufacturer's standard panels of configuration indicated that comply with ASTM E 1264 classifications as designated by types, patterns, acoustical ratings, and light reflectances, unless otherwise indicated.

1. Mounting Method for Measuring NRC: Type E-400; plenum mounting in which face of test specimen is 15-3/4 inches (400 mm) away from test surface per ASTM E 795.

B. Acoustical Panel Colors and Patterns: Match appearance characteristics indicated for each product type.

1. Where appearance characteristics of acoustical panels are indicated by referencing pattern designations in ASTM E 1264 and not manufacturers' proprietary product designations, provide products selected by Architect from each manufacturer's full range that comply with requirements indicated for type, pattern, color, light reflectance, acoustical performance, edge detail, and size.

C. Broad Spectrum Antimicrobial Fungicide and Bactericide Treatment: Provide acoustical panels treated with manufacturer's standard antimicrobial formulation that inhibits fungus, mold, mildew, and gram-positive and gram-negative bacteria and showing no mold, mildew, or bacterial growth when tested according to ASTM D 3273 and evaluated according to ASTM D 3274 or ASTM G 21.

2.2 ACOUSTICAL PANELS FOR ACOUSTICAL PANEL CEILING

A. Manufacturers: Subject to compliance with requirements, available manufacturers offering products that may be incorporated into the Work include, but are not limited to, the following:

1. Armstrong World Industries, Inc.
2. BPB USA.
3. Chicago Metallic Corporation.
4. Ecophon CertainTeed, Inc.
5. USG Interiors, Inc.

B. Basis-of-Design Product: Armstrong “Fissured” (medium texture) or a comparable product by one of the listed manufacturers.

C. Classification: Provide panels complying with ASTM E 1264 for type, form, and pattern.

1. Type and Form: Type III, mineral base with painted finish; Form 2, water felted.
2. Pattern: C D (fissured, natural fissured)

D. Color: White.

E. LR: Not less than 0.81.

F. NRC: Not less than 0.50 for Type III.

G. CAC: Not less than 35 for Type III.

H. Edge/Joint Detail: Square.

I. Thickness: 5/8 inch (15 mm) for Type III.

J. Modular Size: 24 by 48 inches (610 by 610 mm) .

K. Antimicrobial Treatment: Broad spectrum fungicide and bactericide based.

2.3 METAL SUSPENSION SYSTEMS, GENERAL

A. Metal Suspension System Standard: Provide manufacturer's standard direct-hung metal suspension systems of types, structural classifications, and finishes indicated that comply with applicable requirements in ASTM C 635.

B. Finishes and Colors, General: Comply with NAAMM's "Metal Finishes Manual for Architectural and Metal Products" for recommendations for applying and designating finishes. Provide manufacturer's standard factory-applied finish for type of system indicated.

C. Attachment Devices: Size for five times the design load indicated in ASTM C 635, Table 1, "Direct Hung," unless otherwise indicated. Comply with seismic design requirements.

D. Wire Hangers, Braces, and Ties: Provide wires complying with the following requirements:

1. Zinc-Coated, Carbon-Steel Wire: ASTM A 641/A 641M, Class 1 zinc coating, soft temper.
2. Size: Select wire diameter so its stress at 3 times hanger design load (ASTM C 635, Table 1, "Direct Hung") will be less than yield stress of wire, but provide not less than 0.135-inch- (3.5-mm-) diameter wire.

E. Hold-Down Clips: Where indicated, provide manufacturer's standard hold-down clips spaced 24 inches (610 mm) o.c. on all cross tees.

2.4 METAL SUSPENSION SYSTEM FOR ACOUSTICAL PANEL CEILING

A. Available Manufacturers: Subject to compliance with requirements, Manufacturers products that may be incorporated into the Work include, but are not limited to, the following:

1. Armstrong World Industries, Inc.
2. BPB USA.
3. Chicago Metallic Corporation
4. Ecophon CertainTeed, Inc.
5. USG Interiors, Inc.

B. Wide-Face, Single-Web, Steel Suspension System: Main and cross runners roll formed from cold-rolled steel sheet electrolytically zinc coated, with prefinished flanges of width indicated.

1. Structural Classification: Heavy-duty system.
2. Face Finish: Painted white.

2.5 METAL EDGE MOLDINGS AND TRIM

A. Roll-Formed, Sheet-Metal Edge Moldings and Trim: Shadowline wall type molding and profile indicated, manufacturer's standard moldings for edges and penetrations that comply with seismic design requirements; formed from sheet metal of same material, finish, and color as that used for exposed flanges of suspension system runners.

1. Provide manufacturer's standard edge moldings that fit acoustical panel edge details and suspension systems indicated and that match width and configuration of exposed runners, unless otherwise indicated.
2. For circular penetrations of ceiling, provide edge moldings fabricated to diameter required to fit penetration exactly.

2.6 ACOUSTICAL SEALANT

A. Acoustical Sealant for Exposed and Concealed Joints: Manufacturer's standard nonsag, paintable, nonstaining latex sealant, with a VOC content of 250 g/L or less when calculated according to 40 CFR 59, Subpart D (EPA Method 24), complying with ASTM C 834 and effective in reducing airborne sound transmission through perimeter joints and openings in building construction as demonstrated by testing representative assemblies according to ASTM E 90.

PART 3 - EXECUTION

3.1 EXAMINATION

A. Examine substrates, areas, and conditions, including structural framing to which acoustical panel ceilings attach or abut, with Installer present, for compliance with requirements specified in this and other Sections that affect ceiling installation and anchorage and with requirements for installation tolerances and other conditions affecting performance of acoustical panel ceilings.

1. Proceed with installation only after unsatisfactory conditions have been corrected.

3.2 PREPARATION

A. Measure each ceiling area and establish layout of acoustical panels to balance border widths at opposite edges of each ceiling. Avoid using less-than-half-width panels at borders, and comply with layout shown on reflected ceiling plans.

3.3 INSTALLATION

A. General: Install acoustical panel ceilings to comply with ASTM C 636 and seismic design requirements indicated, per manufacturer's written instructions and CISCA's "Ceiling Systems Handbook."

B. Suspend ceiling hangers from building's structural members and as follows:

1. Install hangers plumb and free from contact with insulation or other objects within ceiling plenum that are not part of supporting structure or of ceiling suspension system.
2. Splay hangers only where required to miss obstructions; offset resulting horizontal forces by bracing, countersplaying, or other equally effective means.
3. Where width of ducts and other construction within ceiling plenum produces hanger spacings that interfere with location of hangers at spacings required to support standard suspension system members, install supplemental suspension members and hangers in form of trapezes or equivalent devices.
4. Secure wire hangers to ceiling suspension members and to supports above with a minimum of three tight turns. Connect hangers directly either to structures or to inserts, eye screws, or other devices that are secure and appropriate for substrate and that will not deteriorate or otherwise fail due to age, corrosion, or elevated temperatures.
5. Do not support ceilings directly from permanent metal forms or floor deck. Fasten hangers to cast-in-place hanger inserts, postinstalled mechanical or adhesive anchors, or power-actuated fasteners that extend through forms into concrete.
6. When steel framing does not permit installation of hanger wires at spacing required, install carrying channels or other supplemental support for attachment of hanger wires.
7. Do not attach hangers to steel roof deck. Attach hangers to structural members.
8. Space hangers not more than 48 inches (1200 mm) o.c. along each member supported directly from hangers, unless otherwise indicated; provide hangers not more than 8 inches (200 mm) from ends of each member.

9. Size supplemental suspension members and hangers to support ceiling loads within performance limits established by referenced standards and publications.

C. Secure bracing wires to ceiling suspension members and to supports with a minimum of four tight turns. Suspend bracing from building's structural members as required for hangers, without attaching to permanent metal forms, steel deck, or steel deck tabs. Fasten bracing wires into concrete with cast-in-place or postinstalled anchors.

D. Install edge moldings and trim of type indicated at perimeter of acoustical ceiling area and where necessary to conceal edges of acoustical panels.

1. Apply acoustical sealant in a continuous ribbon concealed on back of vertical legs of moldings before they are installed.
2. Screw attach moldings to substrate at intervals not more than 16 inches (400 mm) o.c. and not more than 3 inches (75 mm) from ends, leveling with ceiling suspension system to a tolerance of 1/8 inch in 12 feet (3.2 mm in 3.6 m). Miter corners accurately and connect securely.
3. Do not use exposed fasteners, including pop rivets, on moldings and trim.

E. Install suspension system runners so they are square and securely interlocked with one another. Remove and replace dented, bent, or kinked members.

F. Install acoustical panels with undamaged edges and fit accurately into suspension system runners and edge moldings. Scribe and cut panels at borders and penetrations to provide a neat, precise fit.

1. Arrange directionally patterned acoustical panels as follows:

a. Install panels in a basket-weave pattern.

2. For square-edged panels, install panels with edges fully hidden from view by flanges of suspension system runners and moldings.
3. Paint cut edges of panel remaining exposed after installation; match color of exposed panel surfaces using coating recommended in writing for this purpose by acoustical panel manufacturer.
4. Install hold-down clips in areas indicated, in areas required by authorities having jurisdiction, and for fire-resistance ratings; space as recommended by panel manufacturer's written instructions, unless otherwise indicated.

3.4 CLEANING

A. Clean exposed surfaces of acoustical panel ceilings, including trim, edge moldings, and suspension system members. Comply with manufacturer's written instructions for cleaning and touchup of minor finish damage. Remove and replace ceiling components that cannot be successfully cleaned and repaired to permanently eliminate evidence of damage.

END OF SECTION 095113

SECTION 096513 - RESILIENT BASE AND ACCESSORIES

PART 1 - GENERAL

1.1 RELATED DOCUMENTS

A. Drawings and general provisions of the Contract, including General and Supplementary Conditions and Division 01 Specification Sections, apply to this Section.

1.2 SUMMARY

A. Section Includes:

1. Resilient base.
2. Resilient molding accessories.

B. Related Sections:

1. Division 09 Section "Resilient Tile Flooring" for resilient floor tile.

1.3 SUBMITTALS

A. Product Data: For each type of product indicated.

B. Samples for Initial Selection: For each type of product indicated.

C. Product Schedule: For resilient products. Use same designations indicated on Drawings.

1.4 QUALITY ASSURANCE

A. Fire-Test-Response Characteristics: As determined by testing identical products according to ASTM E 648 or NFPA 253 by a qualified testing agency.

1. Critical Radiant Flux Classification: Class I, not less than 0.45 W/sq. cm.

1.5 DELIVERY, STORAGE, AND HANDLING

A. Store resilient products and installation materials in dry spaces protected from the weather, with ambient temperatures maintained within range recommended by manufacturer, but not less than 50 deg F (10 deg C) or more than 90 deg F (32 deg C).

1.6 PROJECT CONDITIONS

A. Maintain ambient temperatures within range recommended by manufacturer, but not less than 70 deg F (21 deg C) or more than 95 deg F (35 deg C), in spaces to receive resilient products during the following time periods:

1. 48 hours before installation.
2. During installation.
3. 48 hours after installation.

B. Until Substantial Completion, maintain ambient temperatures within range recommended by manufacturer, but not less than 55 deg F (13 deg C) or more than 95 deg F (35 deg C).

C. Install resilient products after other finishing operations, including painting, have been completed.

1.7 EXTRA MATERIALS

A. Furnish extra materials that match products installed and that are packaged with protective covering for storage and identified with labels describing contents.

1. Furnish not less than 10 linear feet (3 linear m) for every 500 linear feet (150 linear m) or fraction thereof, of each type, color, pattern, and size of resilient product installed.

PART 2 - PRODUCTS

2.1 RESILIENT BASE

A. Resilient Base:

1. Manufacturers: Subject to compliance with requirements, available manufacturers offering products that may be incorporated into the Work include, but are not limited to, the following:

a. Allstate Rubber Corp.; Stoler Industries.
b. Armstrong World Industries, Inc.
c. Burke Mercer Flooring Products; Division of Burke Industries, Inc.
d. Endura Rubber Flooring; Division of Burke Industries, Inc.
e. Estrie Products International; American Biltrite (Canada) Ltd.
f. Flexco, Inc.
g. Johnsonite.
h. Mondo Rubber International, Inc.
i. Musson, R. C. Rubber Co.
j. Nora Rubber Flooring; Freudenberg Building Systems, Inc.
k. PRF USA, Inc.
l. Roppe Corporation, USA.
m. VPI, LLC; Floor Products Division.

B. Resilient Base Standard: ASTM F 1861.

1. Material Requirement: Type TS (rubber, vulcanized thermoset).
2. Manufacturing Method: Group I (solid, homogeneous).
3. Style: Cove (base with toe); Straight at Resilient Athletic Flooring location.

C. Minimum Thickness: 0.125 inch (3.2 mm).

D. Height: 4 inches (102 mm).

E. Lengths: Cut lengths 48 inches (1219 mm) long or coils in manufacturer's standard length.

F. Outside Corners: pre-formed.

G. Inside Corners: pre-formed.

H. Colors and Patterns: As selected by Architect

2.2 RESILIENT MOLDING ACCESSORY

A. Resilient Molding Accessory:

1. Manufacturers: Subject to compliance with requirements, available manufacturers offering products that may be incorporated into the Work include, but are not limited to, the following:

a. Burke Mercer Flooring Products; Division of Burke Industries, Inc.
b. Flexco, Inc.
c. Johnsonite.
d. R.C.A. Rubber Company (The).
e. Roppe Corporation, USA.
f. VPI, LLC; Floor Products Division.

B. Description: Carpet edge for glue-down applications, Reducer strip for resilient floor covering, and joiner for tile and carpet Transition strips.

C. Material: Rubber.

D. Colors and Patterns: As selected by Architect from full range of industry colors.

2.3 INSTALLATION MATERIALS

A. Trowelable Leveling and Patching Compounds: Latex-modified, portland cement based or blended hydraulic-cement-based formulation provided or approved by manufacturer for applications indicated.

B. Adhesives: Water-resistant type recommended by manufacturer to suit resilient products and substrate conditions indicated.

1. Use adhesives that comply with the following limits for VOC content when calculated according to 40 CFR 59, Subpart D (EPA Method 24):

a. Cove Base Adhesives: Not more than 50 g/L.
b. Rubber Floor Adhesives: Not more than 60 g/L.

PART 3 - EXECUTION

3.1 EXAMINATION

A. Examine substrates, with Installer present, for compliance with requirements for maximum moisture content and other conditions affecting performance of the Work.

B. Verify that finishes of substrates comply with tolerances and other requirements specified in other Sections and that substrates are free of cracks, ridges, depressions, scale, and foreign deposits that might interfere with adhesion of resilient products.

C. Proceed with installation only after unsatisfactory conditions have been corrected.

3.2 PREPARATION

A. Prepare substrates according to manufacturer's written instructions to ensure adhesion of resilient products.

3.3 RESILIENT BASE INSTALLATION

A. Comply with manufacturer's written instructions for installing resilient base.

B. Apply resilient base to walls, columns, pilasters, casework and cabinets in toe spaces, and other permanent fixtures in rooms and areas where base is required.

C. Install resilient base in lengths as long as practicable without gaps at seams and with tops of adjacent pieces aligned.

D. Tightly adhere resilient base to substrate throughout length of each piece, with base in continuous contact with horizontal and vertical substrates.

E. Do not stretch resilient base during installation.

F. On masonry surfaces or other similar irregular substrates, fill voids along top edge of resilient base with manufacturer's recommended adhesive filler material.

G. Job-Formed Corners:

1. Outside Corners: Use straight pieces of maximum lengths possible. Form without producing discoloration (whitening) at bends.
2. Inside Corners: Use straight pieces of maximum lengths possible.

3.4 RESILIENT ACCESSORY INSTALLATION

A. Comply with manufacturer's written instructions for installing resilient accessories.

B. Resilient Molding Accessories: Butt to adjacent materials and tightly adhere to substrates throughout length of each piece. Install reducer strips at edges of carpet or resilient floor covering that would otherwise be exposed.

3.5 CLEANING AND PROTECTION

A. Comply with manufacturer's written instructions for cleaning and protection of resilient products.

B. Perform the following operations immediately after completing resilient product installation:

1. Remove adhesive and other blemishes from exposed surfaces.
2. Sweep and vacuum surfaces thoroughly.
3. Damp-mop surfaces to remove marks and soil.

C. Protect resilient products from mars, marks, indentations, and other damage from construction operations and placement of equipment and fixtures during remainder of construction period. Replace any damaged resilient products.

END OF SECTION 096513

SECTION 096519 - RESILIENT TILE FLOORING

PART 1 - GENERAL

1.1 RELATED DOCUMENTS

A. Drawings and general provisions of the Contract, including General and Supplementary Conditions and Division 01 Specification Sections, apply to this Section.

1.2 SUMMARY

A. Section Includes:
1. Vinyl composition floor tile.

1.3 ACTION SUBMITTALS

A. Product Data: For each type of product.

B. Samples for Initial Selection: For each type of floor tile indicated.

1.4 CLOSEOUT SUBMITTALS

A. Maintenance Data: For each type of floor tile to include in maintenance manuals.

1.5 MAINTENANCE MATERIAL SUBMITTALS

A. Furnish extra materials that match products installed and that are packaged with protective covering for storage and identified with labels describing contents.

1. Floor Tile: Furnish one box for every **50** boxes or fraction thereof, of each type, color, and pattern of floor tile installed.

1.6 QUALITY ASSURANCE

A. Installer Qualifications: A qualified installer who employs workers for this Project who are competent in techniques required by manufacturer for floor tile installation and seaming method indicated.

1.7 DELIVERY, STORAGE, AND HANDLING

A. Store floor tile and installation materials in dry spaces protected from the weather, with ambient temperatures maintained within range recommended by manufacturer, but not less than 50 deg F (10 deg C) or more than 90 deg F (32 deg C). Store floor tiles on flat surfaces.

1.8 FIELD CONDITIONS

A. Maintain ambient temperatures within range recommended by manufacturer, but not less than 70 deg F (21 deg C) or more than 95 deg F (35 deg C, in spaces to receive floor tile during the following time periods:

1. 48 hours before installation.
2. During installation.
3. 48 hours after installation.

B. After installation and until Substantial Completion, maintain ambient temperatures within range recommended by manufacturer, but not less than 55 deg F (13 deg C) or more than 95 deg F (35 deg C).

C. Close spaces to traffic during floor tile installation.

D. Close spaces to traffic for 48 hours after floor tile installation.

E. Install floor tile after other finishing operations, including painting, have been completed.

PART 2 - PRODUCTS

2.1 PERFORMANCE REQUIREMENTS

A. Fire-Test-Response Characteristics: For resilient tile flooring, as determined by testing identical products according to ASTM E 648 or NFPA 253 by a qualified testing agency.

1. Critical Radiant Flux Classification: Class I, not less than 0.45 W/sq. cm.

2.2 VINYL COMPOSITION FLOOR TILE

A. Manufacturers: Subject to compliance with requirements, available manufacturers offering products that may be incorporated into the Work include, but are not limited to, the following:

1. Azrock.
2. Armstrong World Industries, Inc;
3. Johnsonite
4. Tarkett, Inc.
5. Mannington Mills, Inc.

B. Tile Standard: ASTM F 1066, Class 2, through-pattern tile.

C. Wearing Surface: Smooth.

D. Thickness: 0.125 inch (3.2 mm).

E. Size: 12 by 12 inches (305 by 305 mm).

F. Colors and Patterns: As selected by Architect from full range of industry colors

2.3 LUXURY VINYL TILE (LVT)

A. Basis-of-Design Product; Subject to compliance with requirements, provide Luxury Vinyl Tile, Select Step, Wood from Mohawk Group or equal. Other manufacturer's to comply with the minimum levels of material and detailing indicated on the drawings and in conformance with provisions of Section 016000 – Product Requirements, and product warranty.

B. Manufacturers: Subject to compliance with requirements, available manufacturers offering products that may be incorporated into the Work include, but are not limited to the following:

1. American Biltrite.
2. Armstrong World Industries, Inc.
3. Congoleum Corporation.
4. Mannington Mills, Inc.
5. Mohawk Group.

C. Tile Standard: ASTM F 1700, Class III, Type A .

D. Thickness: 0.10 in (2.5 mm).

E. Size: 6 by 48 inches (305 by 305 mm).

F. Colors and Patterns: to be selected by Architect from manufacturer's full range of colors.

2.4 INSTALLATION MATERIALS

A. Trowelable Leveling and Patching Compounds: Latex-modified, portland cement based or blended hydraulic-cement-based formulation provided or approved by floor tile manufacturer for applications indicated.

B. Adhesives: Water-resistant type recommended by floor tile and adhesive manufacturers to suit floor tile and substrate conditions indicated.

C. Floor Polish: Provide protective, liquid floor-polish products recommended by floor tile manufacturer.

PART 3 - EXECUTION

3.1 EXAMINATION

A. Examine substrates, with Installer present, for compliance with requirements for maximum moisture content and other conditions affecting performance of the Work.

1. Verify that finishes of substrates comply with tolerances and other requirements specified in other Sections and that substrates are free of cracks, ridges, depressions, scale, and foreign deposits that might interfere with adhesion of floor tile.

B. Proceed with installation only after unsatisfactory conditions have been corrected.

3.2 PREPARATION

A. Prepare substrates according to floor tile manufacturer's written instructions to ensure adhesion of resilient products.

B. Concrete Substrates: Prepare according to ASTM F 710.

1. Verify that substrates are dry and free of curing compounds, sealers, and hardeners.
2. Remove substrate coatings and other substances that are incompatible with adhesives and that contain soap, wax, oil, or silicone, using mechanical methods recommended by floor tile manufacturer. Do not use solvents.
3. Alkalinity and Adhesion Testing: Perform tests recommended by floor tile manufacturer. Proceed with installation only after substrate alkalinity falls within range on pH scale recommended by manufacturer in writing.
4. Moisture Testing: Proceed with installation only after substrates pass testing according to floor tile manufacturer's written recommendations.

C. Fill cracks, holes, and depressions in substrates with trowelable leveling and patching compound; remove bumps and ridges to produce a uniform and smooth substrate.

D. Do not install floor tiles until they are the same temperature as the space where they are to be installed.

1. At least 48 hours in advance of installation, move resilient floor tile and installation materials into spaces where they will be installed.

E. Immediately before installation, sweep and vacuum clean substrates to be covered by resilient floor tile.

3.3 FLOOR TILE INSTALLATION

A. Comply with manufacturer's written instructions for installing floor tile.

B. Lay out floor tiles from center marks established with principal walls, discounting minor offsets, so tiles at opposite edges of room are of equal width. Adjust as necessary to avoid using cut widths that equal less than one-half tile at perimeter.

1. Lay tiles square with room axis

C. Match floor tiles for color and pattern by selecting tiles from cartons in the same sequence as manufactured and packaged, if so numbered. Discard broken, cracked, chipped, or deformed tiles.

1. Lay tiles with grain direction alternating in adjacent tiles (basket-weave pattern).

D. Scribe, cut, and fit floor tiles to butt neatly and tightly to vertical surfaces and permanent fixtures including built-in furniture, cabinets, pipes, outlets, and door frames.

E. Extend floor tiles into toe spaces, door reveals, closets, and similar openings. Extend floor tiles to center of door openings.

F. Maintain reference markers, holes, and openings that are in place or marked for future cutting by repeating on floor tiles as marked on substrates. Use chalk or other nonpermanent marking device.

G. Adhere floor tiles to flooring substrates using a full spread of adhesive applied to substrate to produce a completed installation without open cracks, voids, raising and puckering at joints, telegraphing of adhesive spreader marks, and other surface imperfections.

3.4 CLEANING AND PROTECTION

A. Comply with manufacturer's written instructions for cleaning and protecting floor tile.

B. Perform the following operations immediately after completing floor tile installation:

1. Remove adhesive and other blemishes from exposed surfaces.
2. Sweep and vacuum surfaces thoroughly.
3. Damp-mop surfaces to remove marks and soil.

C. Protect floor tile from mars, marks, indentations, and other damage from construction operations and placement of equipment and fixtures during remainder of construction period.

D. Floor Polish: Remove soil, adhesive, and blemishes from floor tile surfaces before applying liquid floor polish.

1. Apply two coat(s).

E. Protect floor tile until Substantial Completion.

END OF SECTION 096519

SECTION 096813 - TILE CARPETING

PART 1 - GENERAL

1.1 RELATED DOCUMENTS

A. Drawings and general provisions of the Contract, including General and Supplementary Conditions and Division 01 Specification Sections, apply to this Section.

B. Alternates or Substitutions: Approval of alternate or substitute products will be considered only under the terms and conditions as outlined below:

1. Whenever a particular make of material or trade name is specified herein, it shall be regarded as being indicative of the standards required.
2. Refer to Specification Section 012500 SUBSTITUTION PROCEDURES
3. Include completed and signed checklist from Section 2.3.

1.2 SUMMARY

A. Section includes modular carpet tile.

B. Related Requirements:
1. Section 096513 "Resilient Base and Accessories" Section 096519 "Resilient Tile Flooring" for resilient wall base and accessories installed with carpet tile.

1.3 PREINSTALLATION MEETINGS

A. Preinstallation Conference: Conduct conference at Project site.

1. Review methods and procedures related to carpet tile installation including, but not limited to, the following:

a. Review delivery, storage, and handling procedures.
b. Review ambient conditions and ventilation procedures.
c. Review subfloor preparation procedures.
d. Review installation.

1.4 ACTION SUBMITTALS

A. Product Data: For each type of product.

1. Include manufacturer's written data on physical characteristics, durability, and fade resistance.
2. Include manufacturer's written installation recommendations for each type of substrate.

B. Shop Drawings: For carpet tile installation, plans showing the following:

1. Columns, doorways, enclosing walls or partitions, built-in cabinets, and locations where cutouts are required in carpet tiles.
2. Carpet tile type, color, and dye lot.
3. Type of subfloor.
4. Type of installation.
5. Pattern of installation.
6. Pattern type, location, and direction.
7. Pile direction.
8. Type, color, and location of insets and borders.
9. Type, color, and location of edge, transition, and other accessory strips.
10. Transition details to other flooring materials.

C. Samples: For each of the following products and for each color and texture required. Label each Sample with manufacturer's name, material description, color, pattern, and designation indicated on Drawings and in schedules.

1. Carpet Tile: Full-size Sample.
2. Exposed Edge, Transition, and Other Accessory Stripping: 12-inch- (300-mm-) long Samples.

D. Samples for Initial Selection: For each type of carpet tile.

1. Include Samples of exposed edge, transition, and other accessory stripping involving color or finish selection.

E. Samples for Verification: For each of the following products and for each color and texture required. Label each Sample with manufacturer's name, material description, color, pattern, and designation indicated on Drawings and in schedules.

1. Carpet Tile: Full-size Sample.
2. Exposed Edge, Transition, and Other Accessory Stripping: 12-inch- (300-mm-) long Samples.

F. Product Schedule: For carpet tile. Use same designations indicated on Drawings.

1.5 INFORMATIONAL SUBMITTALS

A. Qualification Data: For Installer.

B. Product Test Reports: For carpet tile, for tests performed by a qualified testing agency.

C. Sample Warranty: For special warranty.

1.6 CLOSEOUT SUBMITTALS

A. Maintenance Data: For carpet tiles to include in maintenance manuals. Include the following:

1. Methods for maintaining carpet tile, including cleaning and stain-removal products and procedures and manufacturer's recommended maintenance schedule.
2. Precautions for cleaning materials and methods that could be detrimental to carpet tile.

1.7 MAINTENANCE MATERIAL SUBMITTALS

A. Furnish extra materials, from the same product run, that match products installed and that are packaged with protective covering for storage and identified with labels describing contents.

1. Carpet Tile: Full-size units equal to 5 percent of amount installed for each type indicated, but not less than 10 sq. yd. (8.3 sq. m).

1.8 QUALITY ASSURANCE

A. Installer Qualifications: Firm with not less than 5 consecutive years of experience in installation of commercial carpeting of type, quantity and installation methods similar to work of this section. FLOORING CONTRACTOR SHALL SUBMIT WITH BID PROPOSAL WRITTEN CERTIFICATION FROM CARPET MANUFACTURER THAT CERTIFIES FIRM AS AN APPROVIED INSTALLER FOR THIS PROJECT.

B. Mockups: Build mockups to verify selections made under Sample submittals, to demonstrate aesthetic effects, and to set quality standards for fabrication and installation.
1. Subject to compliance with requirements, approved mockups may become part of the completed Work if undisturbed at time of Substantial Completion.

1.9 DELIVERY, STORAGE, AND HANDLING

A. Comply with CRI's "CRI Carpet Installation Standard”.

B. Deliver carpeting materials in original mill protective package with mill register numbers and tags attached. Maintain wrappers and protective covers in place until carpet is ready for installation. Store inside, in well-ventilated area, protected from weather, moisture and soiling.

C. Cutting: Before beginning installation, it shall be inspected for defects, color variations, or shipping damage and be immediately replaced if any of these conditions exist at no additional cost to the Owner. Carpet tiles shall be inspected to insure that carpet tiles are from the same dye lot.

D. Deliver all required overages and maintenance stock to owner's specified location prior to beginning installation.

1.10 FIELD CONDITIONS

A. Comply with CRI's "CRI Carpet Installation Standard" for temperature, humidity, and ventilation limitations.

B. Environmental Limitations: Do not deliver or install carpet tiles until spaces are enclosed and weathertight, wet-work in spaces is complete and dry, and ambient temperature and humidity conditions are maintained at levels planned for building occupants during the remainder of the construction period.

C. Do not install carpet tiles over concrete slabs until slabs have cured and are sufficiently dry to bond with adhesive and concrete slabs have pH range recommended by carpet tile manufacturer.

D. Where demountable partitions or other items are indicated for installation on top of carpet tiles, install carpet tiles before installing these items.

1.11 WARRANTY

A. Special Warranty for Carpet Tiles: Manufacturer agrees to repair or replace components of carpet tile installation that fail in materials or workmanship within specified warranty period.

1. Warranty does not include deterioration or failure of carpet tile due to unusual traffic, failure of substrate, vandalism, or abuse.
2. Failures include, but are not limited to, the following:

   a. More than 10 percent edge raveling, snags, and runs.
   b. Dimensional instability.
   c. Excess static discharge.
   d. Loss of tuft-bind strength.
   e. Loss of face fiber.
   f. Delamination.
3. Warranty Period: 10 years from date of Substantial Completion.
4. Definition of Lifetime: Lifetime is defined as the period from which materials are installed until the date in which the owner removes them from service.
5. Manufacturer's Lifetime Warranty, non-prorated, against product failure covering all costs including freight, labor, and material for the following:
   - Edge Ravel/Zippering
   - Delamination.
   - Static protection as stated above.
   - Wear - No more than 10% Face Yarn Loss.
   - Dimensional stability
   - Adhesive bond to the floor
   - Permanent stain resistance to acid-type spills
6. Supplemental fiber Warranty Items:
   - Colorfastness to Light
   - 10 Year Stain Warranty
   - 10 Year Colorfastness to Atmospheric Contaminants

B. CATIONIC STAIN RESISTANCE

1. Stain resistant properties must be permanent and not removable by commercial cleanings or abrasive wear. Under GSA requirements stain resistant carpets must score no less than 8.0 (10.0 is the best) on the AATCC Red 40 Stain Scale. Test sample must first be exposed to 100 revolutions on the Taber Abrader (1,000-gram weight per H-18 wheel) and then abraded area must be stain tested using AATCC test method 175. Topical stain resistant treatments will not be acceptable. Stain resistant properties must be inherent.

PART 2 - PRODUCTS

2.1 CARPET TILE

A. Basis of Design Product: Bigelow Statement Stone Tile by The Mohawk Group

B. Manufacturers: Subject to compliance with requirements, available manufacturers offering products that may be incorporated into the Work include, but are not limited to the following:

1. Interface, LLC.
2. J&J Invision; J&J Industries, Inc.
3. Milliken & Company.
4. Mohawk Group (The); Mohawk Carpet, LLC.
5. Shaw Contract Group; a Berkshire Hathaway company.
6. Tandus; a Tarkett company.

C. Color: 983 Clean Slate.

D. Pattern: Quarter Turn.

E. Fiber Content: 100 percent nylon 6.

F. Fiber Type: Color Strand.

G. Pile Characteristic: Textured Patterned Loop pile.

H. Density: 8576 oz./cu. yd. (g/cu. cm).

I. Pile Thickness: .068 inches (mm) for finished carpet tile.

J. Stitches: 11.2 per inch (mm).

K. Gage: 1/12 inch (mm).

L. Surface Pile Weight: 16 oz./sq. yd. (g/sq. m).

M. Backing System: Equal to EcoFlex ICT.

N. Size: 24 by 24 inches (610 by 610 mm).

O. Applied Treatments:

1. Soil-Resistance Treatment: Equal to Sentry Plus.

P. Performance Characteristics:

1. Appearance Retention Rating: Heavy traffic, 3.0 minimum according to ASTM D 7330.
2. Critical Radiant Flux Classification: Not less than according to NFPA 253.
3. Dry Breaking Strength: Not less than 100 lbf (445 N) according to ASTM D 2646.
4. Tuft Bind: Not less than according to ASTM D 1335.
5. Delamination: Not less than according to ASTM D 3936.

6. Dimensional Tolerance: Within 1/32 inch (0.8 mm) of specified size dimensions, as determined by physical measurement.
7. Dimensional Stability: 0.2 percent or less according to ISO 2551 (Aachen Test).
8. Noise Reduction Coefficient (NRC): according to ASTM C 423.
9. Colorfastness to Crocking: Not less than 4, wet and dry, according to AATCC 165.
10. Colorfastness to Light: Not less than 4 after AFU (AATCC fading units) according to AATCC 16, Option E.
11. Electrostatic Propensity: according to AATCC 134.

2.2 INSTALLATION ACCESSORIES

A. Trowelable Leveling and Patching Compounds: Latex-modified, hydraulic-cement-based formulation provided or recommended by carpet tile manufacturer.

B. Adhesives: Water-resistant, mildew-resistant, nonstaining, pressure-sensitive type to suit products and subfloor conditions indicated, that comply with flammability requirements for installed carpet tile, and are recommended by carpet tile manufacturer for releasable installation.

1. Adhesives shall have a VOC content of 50 g/L or less.
2. Adhesive shall comply with the testing and product requirements of the California Department of Public Health's "Standard Method for the Testing and Evaluation of Volatile Organic Chemical Emissions from Indoor Sources Using Environmental Chambers."

C. Metal Edge/Transition Strips: Extruded aluminum with mill finish of profile and width shown, of height required to protect exposed edge of carpet, and of maximum lengths to minimize running joints.

2.3 SUBMITTAL CHECKLIST

A. Checklist Instructions: For all submittals for alternates or substitutes, submitter must include the checklist below, completely filled out and signed by an officer of the company. Failure to provide this documentation will result in rejection of submittal.
1. Fill-in the left column with the actual data as it pertains to your alternate or substitute. If more room is required, attach additional pages.
2. Circle either yes or no indicating whether or not the submitted product meets or exceeds the specification requirements for each checklist item.

C. Checklist Form:

1. Submitting company's name: _____

2. Checklist preparer's name: _____

3. Submitted product manufacturer: _____

4. Submitted product style name: _____

5. Checklist:

Specification Citation: (Please enter submittal information)		Circle Answer
Section 09681 Part 2.01.A, B, C, and D:		
1.	Construction:	YES / NO
2.	Surface Texture:	YES / NO
3.	Pile Thickness:	YES / NO
4.	Gauge:	YES / NO
5.	Stitches:	YES / NO
6.	Yarn Weight:	YES / NO
7.	Density:	YES / NO
8.	Face Yarn:	YES / NO
9.	Dye System:	YES / NO
10.	Protective Treatment:	YES / NO
11.	Backing Material:	YES / NO
12.	Size:	YES / NO
13.	Sq. Yds. per Carton:	YES / NO
14.	Static Control:	YES / NO
15.	Flammability:	YES / NO
16.	NBS Smoke Chamber:	YES / NO
17.	Color Fastness:	YES / NO
18.	Indoor Air Quality:	YES / NO
19.	Carpet Lifetime Warranty (Part B, Item 1& 2)	YES / NO
20.	Cationic Stain Resistance (Part C, Item 1):	YES / NO
21.	Environmental Attributes (Part D, Items 1-4):	YES / NO

PART 3 - EXECUTION

3.1 EXAMINATION

A. Examine substrates, areas, and conditions, with Installer present, for compliance with requirements for maximum moisture content, alkalinity range, installation tolerances, and other conditions affecting carpet tile performance.

B. Examine carpet tile for type, color, pattern, and potential defects.

C. Concrete Slabs: Verify that finishes comply with requirements specified in Section 033000 "Cast-in-Place Concrete" and that surfaces are free of cracks, ridges, depressions, scale, and foreign deposits.

1. Moisture Testing: Perform tests so that each test area does not exceed 200 sq. ft. (18.6 sq. m), and perform no fewer than three tests in each installation area and with test areas evenly spaced in installation areas.

a. Anhydrous Calcium Chloride Test: ASTM F 1869. Proceed with installation only after substrates have maximum moisture-vapor-emission rate of 3 lb of water/1000 sq. ft. (1.36 kg of water/92.9 sq. m) in 24 hours.
b. Relative Humidity Test: Using in situ probes, ASTM F 2170. Proceed with installation only after substrates have a maximum 75 percent relative humidity level measurement.
c. Perform additional moisture tests recommended in writing by adhesive and carpet tile manufacturers. Proceed with installation only after substrates pass testing.

D. Concrete Subfloors: Verify the following:

1. Underlayment surface is free of irregularities and substances that may interfere with adhesive bond or show through surface.

E. Painted Subfloors: Perform bond test recommended in writing by adhesive manufacturer.

1. Access Flooring Systems: Verify the following:
2. Access floor substrate is compatible with carpet tile and adhesive if any.
3. Underlayment surface is flat, smooth, evenly planed, tightly jointed, and free of irregularities, gaps greater than 1/8 inch (3 mm), protrusions more than 1/32 inch (0.8 mm), and substances that may interfere with adhesive bond or show through surface.

F. Proceed with installation only after unsatisfactory conditions have been corrected.

3.2 PREPARATION

A. General: Comply with CRI's "Carpet Installation Standards" and with carpet tile manufacturer's written installation instructions for preparing substrates indicated to receive carpet tile.

B. Use trowelable leveling and patching compounds, according to manufacturer's written instructions, to fill cracks, holes, depressions, and protrusions in substrates and to level concrete surfaces. Fill or level cracks, holes and depressions 1/8 inch (3 mm) wide or wider, and protrusions more than 1/32 inch (0.8 mm) unless more stringent requirements are required by manufacturer's written instructions.

C. Concrete Substrates: Remove coatings, including curing compounds, and other substances that are incompatible with adhesives and that contain soap, wax, oil, or silicone, without using solvents. Use mechanical methods recommended in writing by adhesive and carpet tile manufacturers.

D. Metal Substrates: Clean grease, oil, soil and rust, and prime if recommended in writing by adhesive manufacturer. Rough sand painted metal surfaces and remove loose paint. Sand aluminum surfaces, to remove metal oxides, immediately before applying adhesive.

E. Broom and vacuum clean substrates to be covered immediately before installing carpet tile.

3.3 INSTALLATION

A. General: Comply with CRI's "CRI Carpet Installation Standard," Section 18, "Modular Carpet" and with carpet tile manufacturer's written installation instructions.

B. Installation Method: Glue down; install every tile with full-spread, releasable, pressure-sensitive adhesive.

C. Maintain dye-lot integrity. Do not mix dye lots in same area.

D. Maintain pile-direction patterns indicated on Drawings.

E. Cut and fit carpet tile to butt tightly to vertical surfaces, permanent fixtures, and built-in furniture including cabinets, pipes, outlets, edgings, thresholds, and nosings. Bind or seal cut edges as recommended by carpet tile manufacturer.

F. Extend carpet tile into toe spaces, door reveals, closets, open-bottomed obstructions, removable flanges, alcoves, and similar openings.

G. Maintain reference markers, holes, and openings that are in place or marked for future cutting by repeating on carpet tile as marked on subfloor. Use nonpermanent, nonstaining marking device.

H. Install pattern parallel to walls and borders.

I. Access Flooring: Stagger joints of carpet tiles so carpet tile grid is offset from access flooring panel grid. Do not fill seams of access flooring panels with carpet adhesive; keep seams free of adhesive.

3.4 CLEANING AND PROTECTION

A. Perform the following operations immediately after installing carpet tile:

1. Remove excess adhesive and other surface blemishes using cleaner recommended by carpet tile manufacturer.
2. Remove yarns that protrude from carpet tile surface.
3. Vacuum carpet tile using commercial machine with face-beater element.

B. Protect installed carpet tile to comply with CRI's "Carpet Installation Standard," Section 20, "Protecting Indoor Installations."

C. Protect carpet tile against damage from construction operations and placement of equipment and fixtures during the remainder of construction period. Use protection methods indicated or recommended in writing by carpet tile manufacturer.

END OF SECTION 096813

SECTION 098433 - SOUND-ABSORBING WALL UNITS

PART 1 - GENERAL

1.1 RELATED DOCUMENTS

A. Drawings and general provisions of the Contract, including General and Supplementary Conditions and Division 01 Specification Sections, apply to this Section.

1.2 SUMMARY

A. Section includes shop-fabricated, acoustical panel units tested for acoustical performance, including the following:

1. Sound-absorbing wall panels.

1.3 DEFINITIONS

A. NRC: Noise Reduction Coefficient.

B. SAA: Sound Absorption Average.

1.4 PREINSTALLATION MEETINGS

A. Preinstallation Conference: Conduct conference at Project site.

1.5 ACTION SUBMITTALS

A. Product Data: For each type of product.

1. Include panel edge, core material, and mounting indicated.

B. Shop Drawings: For unit assembly and installation.

1. Include plans, elevations, sections, and mounting devices and details.
2. Include details at panel head, base, joints, and corners; and details at ceiling, floor base, and wall intersections. Indicate panel edge profile and core materials.
3. Include details at cutouts and penetrations for other work.
4. Include direction of fabric weave and pattern matching.

C. Samples for Initial Selection: For each type of fabric facing.

1. Include Samples of hardware and accessories involving color or finish selection.

D. Samples for Verification: For the following products:

1. Panel Edge: 12-inch- (300-mm-) long Sample(s) showing each edge profile, corner, and finish.
2. Core Material: 12-inch- (300-mm-) square Sample at corner.
3. Mounting Devices: Full-size Samples.
4. Assembled Panels: Approximately 36 by 36 inches (900 by 900 mm), including joints and mounting methods.

1.6 INFORMATIONAL SUBMITTALS

A. Coordination Drawings: Elevations and other details, drawn to scale, on which the following items are shown and coordinated with each other, using input from installers of the items involved:

1. Electrical outlets, switches, and thermostats.
2. Items penetrating or covered by units including the following:

a. Lighting fixtures.
b. Air outlets and inlets.
c. Speakers.
d. Alarms.
e. Sprinklers.
f. Access panels.

3. Show operation of hinged and sliding components covered by or adjacent to units.

B. Product Certificates: For each type of unit.

C. Sample Warranty: For manufacturer's special warranty.

1.7 CLOSEOUT SUBMITTALS

A. Maintenance Data: For each type of unit to include in maintenance manuals. Include fabric manufacturers' written cleaning and stain-removal instructions.

1.8 MAINTENANCE MATERIAL SUBMITTALS

A. Furnish extra materials from same production run that match products installed and that are packaged with protective covering for storage and identified with labels describing contents.
1. Mounting Devices: Full-size units equal to 5 percent of amount installed, but no fewer than five devices, including unopened adhesives.

1.9 QUALITY ASSURANCE

A. Mockups: Build mockups to verify selections made under Sample submittals, to demonstrate aesthetic effects, and to set quality standards for materials, fabrication, and installation.

1. Build mockup of typical wall area 48 inches (1200 mm) wide by full height.

2. Approval of mockups does not constitute approval of deviations from the Contract Documents contained in mockups unless Architect specifically approves such deviations in writing.
3. Subject to compliance with requirements, approved mockups may become part of the completed Work if undisturbed at time of Substantial Completion.

1.10 DELIVERY, STORAGE, AND HANDLING

A. Comply with fabric and unit manufacturers' written instructions for minimum and maximum temperature and humidity requirements for shipment, storage, and handling.

B. Deliver materials and units in unopened bundles and store in a temperature-controlled dry place with adequate air circulation.

1.11 FIELD CONDITIONS

A. Environmental Limitations: Do not install units until spaces are enclosed and weathertight, wet-work in spaces is complete and dry, work at and above ceilings is complete, and ambient temperature and humidity conditions are maintained at the levels indicated for Project when occupied for its intended use.

B. Lighting: Do not install units until a permanent level of lighting is provided on surfaces to receive the units.

C. Air-Quality Limitations: Protect units from exposure to airborne odors, such as tobacco smoke, and install units under conditions free from odor contamination of ambient air.

D. Field Measurements: Verify unit locations and actual dimensions of openings and penetrations by field measurements before fabrication, and indicate them on Shop Drawings.

1.12 WARRANTY

A. Special Warranty: Manufacturer agrees to repair or replace units and components that fail in materials or workmanship within specified warranty period.

1. Failures include, but are not limited to the following:

a. Acoustical performance.
b. Warping of core.

2. Warranty Period: Two years from date of Substantial Completion.

PART 2 - PRODUCTS

2.1 MANUFACTURERS

A. Source Limitations: Obtain wall units specified in this Section and ceiling units specified in Section 098436 "Sound-Absorbing Ceiling Units from single source from single manufacturer.

B. Available Manufacturers: Subject to compliance with requirements, manufacturers offering products that may be incorporated into the Work include, but are not limited to, the following:

1. Tectum Inc.
2. Acoustical Surfaces, Inc.

2.2 PERFORMANCE REQUIREMENTS

A. Fire-Test-Response Characteristics: Units shall comply with "Surface-Burning Characteristics" or "Fire Growth Contribution" Subparagraph below, or both, as determined by testing identical products by UL or another testing and inspecting agency acceptable to authorities having jurisdiction:

1. Surface-Burning Characteristics: Comply with ASTM E 84 or UL 723; testing by a qualified testing agency. Identify products with appropriate markings of applicable testing agency.

a. Flame-Spread Index: 25 or less.
b. Smoke-Developed Index: 450 or less.

2. Fire Growth Contribution: Comply with acceptance criteria of local code and authorities having jurisdiction when tested according to NFPA 265 Method B Protocol or NFPA 286.

2.3 CEMENTITIOUS WOOD FIBER WALL PANELS

A. Standard Interior Wall Panels
1. Core: Cementitious-Fiber Board Core: Density of not less than 20 lb/cu. ft. (320 kg/cu. m
2. Thickness: 2 inches (51) mm.
3. Edge: Beveled self-edge
4. Width: As indicated on the Drawings.
5. Length: As indicated on the Drawings.
6. Color: As selected by Architect from manufacturer’s full-range.
7. Mounting: As recommended by manufacturer.

PART 3 - EXECUTION

3.1 EXAMINATION

A. Examine substrates, areas, and conditions for compliance with requirements, installation tolerances, and other conditions affecting unit performance.

B. Proceed with installation only after unsatisfactory conditions have been corrected.

3.2 INSTALLATION

A. Install units in locations indicated. Unless otherwise indicated, install units with vertical surfaces and edges plumb, top edges level and in alignment with other units, faces flush, and scribed to fit adjoining work accurately at borders and at penetrations.

B. Comply with manufacturer's written instructions for installation of units using type of mounting devices indicated. Mount units securely to supporting substrate.

3.3 INSTALLATION TOLERANCES

A. Variation from Plumb and Level: Plus or minus 1/16 inch (1.6 mm) in 48 inches (1200 mm), noncumulative.

B. Variation of Joint Width: Not more than 1/16-inch (1.6-mm) variation from reveal line in 48 inches (1200 mm), noncumulative.

3.4 CLEANING

A. Clip loose threads; remove pills and extraneous materials.

B. Clean panels on completion of installation to remove dust and other foreign materials according to manufacturer's written instructions.

END OF SECTION 098433

SECTION 098436 - SOUND-ABSORBING CEILING UNITS

PART 1 - GENERAL

1.1 RELATED DOCUMENTS

A. Drawings and general provisions of the Contract, including General and Supplementary Conditions and Division 01 Specification Sections, apply to this Section.

1.2 SUMMARY

A. Section includes shop-fabricated, acoustical panel units tested for acoustical performance, including the following:

1. Sound-absorbing ceiling panels.

1.3 DEFINITIONS

A. NRC: Noise Reduction Coefficient.

B. SAA: Sound Absorption Average.

1.4 PREINSTALLATION MEETINGS

A. Preinstallation Conference: Conduct conference at Project site.

1.5 ACTION SUBMITTALS

A. Product Data: For each type of product.

1. Include panel edge, core material, and mounting indicated.

B. Shop Drawings: For unit assembly and installation.

1. Include reflected ceiling plans, elevations, sections, and mounting devices and details.
2. Include details at joints and corners; and details at ceiling intersections and intersections with walls. Indicate panel edge profile and core materials.
3. Include direction of fabric weave and pattern matching.

C. Samples for Initial Selection: For each type of fabric facing.

1. Include Samples of hardware and accessories involving color or finish selection.

D. Samples for Verification: For the following products:

1. Panel Edge: 12-inch- (300-mm-) long Sample(s) showing each edge profile, corner, and finish.
2. Core Material: 12-inch- (300-mm-) square Sample at corner.
3. Mounting Devices: Full-size Samples.
4. Assembled Panels: Approximately 36 by 36 inches (900 by 900 mm), including joints and mounting methods.

1.6 INFORMATIONAL SUBMITTALS

A. Coordination Drawings: Reflected ceiling plans and other details, drawn to scale, on which the following items are shown and coordinated with each other, using input from installers of the items involved:

1. Electrical outlets.
2. Suspended ceiling components above ceiling units.
3. Structural members to which suspension devices will be attached.
4. Items penetrating or covered by units including the following:

a. Lighting fixtures.
b. Air outlets and inlets.
c. Speakers.
d. Alarms.
e. Sprinklers.
f. Access panels.

5. Show operation of hinged and sliding components covered by or adjacent to units.

B. Product Certificates: For each type of unit.

C. Sample Warranty: For manufacturer's special warranty.

1.7 CLOSEOUT SUBMITTALS

A. Maintenance Data: For each type of unit to include in maintenance manuals. Include fabric manufacturer's written cleaning and stain-removal instructions.

1.8 MAINTENANCE MATERIAL SUBMITTALS

A. Furnish extra materials, from the same product run, that match products installed and that are packaged with protective covering for storage and identified with labels describing contents.
1. Ceiling Panels: Full-size units equal to 5 percent of amount installed.
2. Provide new unopened cartons of extra materials, packaged with protective covering for storage and identified with appropriate labels.

1.9 QUALITY ASSURANCE

A. Mockups: Build mockups to verify selections made under Sample submittals, to demonstrate aesthetic effects, and to set quality standards for materials, fabrication, and installation.

1. Build mockup of typical ceiling area 96 inches (2400 mm) wide by full width of ceiling. Include intersection of wall and ceiling, corners, and perimeters.
2. Approval of mockups does not constitute approval of deviations from the Contract Documents contained in mockups unless Architect specifically approves such deviations in writing.
3. Subject to compliance with requirements, approved mockups may become part of the completed Work if undisturbed at time of Substantial Completion.

1.10 DELIVERY, STORAGE, AND HANDLING

A. Comply with fabric and unit manufacturers' written instructions for minimum and maximum temperature and humidity requirements for shipment, storage, and handling.

B. Deliver materials and units in unopened bundles and store in a temperature-controlled dry place with adequate air circulation.

1.11 FIELD CONDITIONS

A. Environmental Limitations: Do not install units until spaces are enclosed and weathertight, wet-work in spaces is complete and dry, work at and above ceilings is complete, and ambient temperature and humidity conditions are maintained at the levels indicated for Project when occupied for its intended use.

B. Lighting: Do not install units until a permanent level of lighting is provided on surfaces to receive the units.

C. Air-Quality Limitations: Protect units from exposure to airborne odors, such as tobacco smoke, and install units under conditions free from odor contamination of ambient air.

D. Field Measurements: Verify unit locations and actual dimensions of openings and penetrations by field measurements before fabrication, and indicate them on Shop Drawings.

1.12 WARRANTY

A. Special Warranty: Manufacturer agrees to repair or replace units and components that fail in materials or workmanship within specified warranty period.

1. Failures include, but are not limited to, the following:

a. Acoustical performance.
b. Warping of core.

2. Warranty Period: Two years from date of Substantial Completion.

PART 2 - PRODUCTS

2.1 MANUFACTURERS

A. Source Limitations: Obtain ceiling units specified in this Section and wall units specified in Section 098433 "Sound-Absorbing Wall Units" from single source from single manufacturer.

2.2 PERFORMANCE REQUIREMENTS

A. Fire-Test-Response Characteristics: Units shall comply with "Surface-Burning Characteristics" or "Fire Growth Contribution" Subparagraph below, or both, as determined by testing identical products by UL or another testing and inspecting agency acceptable to authorities having jurisdiction:

1. Surface-Burning Characteristics: Comply with ASTM E 84 or UL 723; testing by a qualified testing agency. Identify products with appropriate markings of applicable testing agency.

a. Flame-Spread Index: 25 or less.
b. Smoke-Developed Index: 450 or less.

2. Fire Growth Contribution: Comply with acceptance criteria of local code and authorities having jurisdiction when tested according to NFPA 286.

2.3 SOUND-ABSORBING CEILING UNITS

A. Sound-Absorbing Ceiling Panel: Manufacturer's standard panel construction consisting of sound absorbing acoustical lay-in ceiling tile.

1. Manufacturers: Subject to compliance with requirements, provide products by one of the following:

a. Acoustical Panel Systems (APS, Inc.).
b. Tectum Inc.
c. Wall Technology, Inc.; an Owens Corning company.

2. Panel Shape: As indicated on Drawings.
3. Mounting: manufacturer's standard suspension system.
1. Core: Cementitious fiber board: Density of not less than 20 lb/cu. ft. (320 kg/cu. m
2. Edge Construction: Manufacturer's standard .
3. Edge Profile: Square.
4. Corner Detail in Elevation: Square with continuous edge profile indicated.
5. Acoustical Performance: Sound absorption NRC of 0.50 to 0.90 according to ASTM C 423
6. Mounting Style: Type E-400.
7. Thickness and Back Rabbet: 1-1/2 inches (38 mm) thick, ¾ inch rabbet.
8. Panel Width: 24 inches (610 mm).
9. Panel Height: 48 inches.

10. Color: as scheduled in drawings.

B. Mounting Devices: Concealed on back or top edge of unit, recommended by manufacturer to support weight of unit.

PART 3 - EXECUTION

3.1 EXAMINATION

A. Examine fabricated units, substrates, areas, and conditions for compliance with requirements, installation tolerances, and other conditions affecting unit performance.

B. Proceed with installation only after unsatisfactory conditions have been corrected.

3.2 INSTALLATION

A. Install units in locations indicated. Unless otherwise indicated, install units with edges in alignment with walls and other units, faces flush, and scribed to fit adjoining work accurately at borders and at penetrations.

B. Comply with manufacturer's written instructions for installation of units using type of mounting devices indicated. Mount units securely to supporting substrate.

C. Align grain with adjacent units.

3.3 INSTALLATION TOLERANCES

A. Variation from Alignment with Surfaces: Plus or minus 1/16 inch (1.6 mm) in 48 inches (1200 mm), noncumulative.

B. Variation from Level or Slope: Plus or minus 1/16 inch (1.6 mm).

3.4 CLEANING

A. Clip loose threads; remove pills and extraneous materials.

B. Clean panels on completion of installation to remove dust and other foreign materials according to manufacturer's written instructions.

END OF SECTION 098436

SECTION 099113 - EXTERIOR PAINTING

PART 1 - GENERAL

1.1 RELATED DOCUMENTS

A. Drawings and general provisions of the Contract, including General and Supplementary Conditions and Division 01 Specification Sections, apply to this Section.

1.2 SUMMARY

A. Section includes surface preparation and the application of paint systems on exterior substrates:

1. Concrete. (see Elastomeric Coatings for exterior walls)
2. Concrete masonry units (CMU). (see Elastomeric Coatings for exterior walls)
3. Steel.
4. Galvanized metal.
5. Wood.
6. Plastic trim
7. Exterior gypsum board.

B. Related Requirements:

1. Section 051200 "Structural Steel Framing" for shop priming of metal substrates with primers specified in this Section.
2. Section 099600 "High-Performance Coatings" for special-use coatings.
3. Section 099123 "Interior Painting" for surface preparation and the application of paint systems on interior substrates.

1.3 DEFINITIONS

A. Gloss Level 1: Not more than 5 units at 60 degrees and 10 units at 85 degrees, according to ASTM D 523, a matte flat finish.

B. Gloss Level 2: Not more than 10 units at 60 degrees and 10 to 35 units at 85 degrees, according to ASTM D 523, a high-side sheen flat, velvet-like finish.

C. Gloss Level 3: 10 to 25 units at 60 degrees and 10 to 35 units at 85 degrees, according to ASTM D 523, an eggshell finish.

D. Gloss Level 4: 20 to 35 units at 60 degrees and not less than 35 units at 85 degrees, according to ASTM D 523, a satin-like finish.

E. Gloss Level 5: 35 to 70 units at 60 degrees, according to ASTM D 523, a semi-gloss finish.

F. Gloss Level 6: 70 to 85 units at 60 degrees, according to ASTM D 523, a gloss finish.

1.4 ACTION SUBMITTALS

A. Product Data: For each type of product. Include preparation requirements and application instructions.

B. Samples for Initial Selection: For each type of topcoat product.

C. Samples for Verification: For each type of paint system and each color and gloss of topcoat.

1. Submit Samples on rigid backing, 8 inches (200 mm) square.
2. Label each coat of each Sample.
3. Label each Sample for location and application area.

D. Product List: For each product indicated, include the following:

1. Cross-reference to paint system and locations of application areas. Use same designations indicated on Drawings and in schedules.
2. VOC content.

1.5 CLOSEOUT SUBMITTALS

A. Coating Maintenance Manual: Provide coating maintenance manual including area summary with finish schedule, area detail designating location where each product/color/finish was used, product data pages, material safety data sheets, care and cleaning instructions, touch-up procedures, and color samples of each color and finish used.

1.6 MAINTENANCE MATERIAL SUBMITTALS

A. Furnish extra materials from the same product run, that match products installed and that are packaged with protective covering for storage and identified with labels describing contents.

1. Paint: 1 gal. (3.8 L) of each material and color applied.

1.7 QUALITY ASSURANCE

A. Mockups: Apply mockups of each paint system indicated and each color and finish selected to verify preliminary selections made under Sample submittals and to demonstrate aesthetic effects and set quality standards for materials and execution.

1. Architect will select one surface to represent surfaces and conditions for application of each paint system specified in Part 3.

a. Vertical and Horizontal Surfaces: Provide samples of at least 100 sq. ft. (9 sq. m).
b. Other Items: Architect will designate items or areas required.

2. Final approval of color selections will be based on mockups.

a. If preliminary color selections are not approved, apply additional mockups of additional colors selected by Architect at no added cost to Owner.

3. Approval of mockups does not constitute approval of deviations from the Contract Documents contained in mockups unless Architect specifically approves such deviations in writing.
4. Subject to compliance with requirements, approved mockups may become part of the completed Work if undisturbed at time of Substantial Completion.

1.8 DELIVERY, STORAGE, AND HANDLING

A. Delivery and Handling: Deliver products to Project site in an undamaged condition in manufacturer's original sealed containers, complete with labels and instructions for handling, storing, unpacking, protecting, and installing. Packaging shall bear the manufacture's label with the following information:

1. Product name and type (description).
2. Batch date.
3. Color number.
4. VOC content.
5. Environmental handling requirements.
6. Surface preparation requirements.
7. Application instructions.

B. Store materials not in use in tightly covered containers in well-ventilated areas with ambient temperatures continuously maintained at not less than 45 deg F (7 deg C).

1. Maintain containers in clean condition, free of foreign materials and residue.
2. Remove rags and waste from storage areas daily.

1.9 FIELD CONDITIONS

A. Apply paints only when temperature of surfaces to be painted and ambient air temperatures are between 50 and 95 deg F (10 and 35 deg C).

B. Do not apply paints in snow, rain, fog, or mist; when relative humidity exceeds 85 percent; at temperatures less than 5 deg F (3 deg C) above the dew point; or to damp or wet surfaces.

PART 2 - PRODUCTS

2.1 MANUFACTURERS

A. Basis-of-Design Product: Subject to compliance with requirements, provide Sherwin-Williams Company products indicated or comparable product from one of the following:

1. Benjamin Moore & Co.
2. Dunn-Edwards.
3. Sherwin-Williams.

B. Source Limitations: Obtain paint materials from single source from single listed manufacturer.

1. Manufacturer's designations listed on a separate color schedule are for color reference only and do not indicate prior approval.

2.2 PAINT, GENERAL

A. MPI Standards: Provide products that comply with MPI standards indicated and that are listed in its "MPI Approved Products List."

B. Material Compatibility:

1. Provide materials for use within each paint system that are compatible with one another and substrates indicated, under conditions of service and application as demonstrated by manufacturer, based on testing and field experience.
2. For each coat in a paint system, provide products recommended in writing by manufacturers of topcoat for use in paint system and on substrate indicated.

C. VOC Content: Provide materials that comply with VOC limits of authorities having jurisdiction.

D. Colors: As indicated in a color schedule.

1. 30 percent of surface area will be painted with deep tones.

2.3 SOURCE QUALITY CONTROL

A. Testing of Paint Materials: Owner reserves the right to invoke the following procedure:

1. Owner will engage the services of a qualified testing agency to sample paint materials. Contractor will be notified in advance and may be present when samples are taken. If paint materials have already been delivered to Project site, samples may be taken at Project site. Samples will be identified, sealed, and certified by testing agency.
2. Testing agency will perform tests for compliance with product requirements.
3. Owner may direct Contractor to stop applying paints if test results show materials being used do not comply with product requirements. Contractor shall remove noncomplying paint materials from Project site, pay for testing, and repaint surfaces painted with rejected materials. Contractor will be required to remove rejected materials from previously painted surfaces if, on repainting with complying materials, the two paints are incompatible.

PART 3 - EXECUTION

3.1 EXAMINATION

A. Examine substrates and conditions, with Applicator present, for compliance with requirements for maximum moisture content and other conditions affecting performance of the Work. Verify suitability of substrates, including surface conditions and compatibility with existing finishes and primers. Where acceptability of substrate conditions is in question, apply samples and perform in-situ testing to verify compatibility, adhesion, and film integrity of new paint application.

1. Report, in writing, conditions that may affect application, appearance, or performance of paint.

B. Substrate Conditions:

1. Maximum Moisture Content of Substrates: When measured with an electronic moisture meter as follows:

a. Concrete: 12 percent.
b. Masonry (Clay and CMU): 12 percent.
c. Wood: 15 percent.
d. Gypsum Board: 12 percent.

2. Exterior Gypsum Board Substrates: Verify that finishing compound is sanded smooth.

C. Proceed with coating application only after unsatisfactory conditions have been corrected; application of coating indicates acceptance of surfaces and conditions.

3.2 PREPARATION

A. Comply with manufacturer's written instructions and recommendations in "MPI Manual" applicable to substrates and paint systems indicated.

B. Remove hardware, covers, plates, and similar items already in place that are removable and are not to be painted. If removal is impractical or impossible because of size or weight of item, provide surface-applied protection before surface preparation and painting.

1. After completing painting operations, use workers skilled in the trades involved to reinstall items that were removed. Remove surface-applied protection.

C. Clean substrates of substances that could impair bond of paints, including dust, dirt, oil, grease, and incompatible paints and encapsulants.

1. Remove incompatible primers and reprime substrate with compatible primers or apply tie coat as required to produce paint systems indicated.

D. Concrete Substrates: Remove release agents, curing compounds, efflorescence, and chalk. Do not paint surfaces if moisture content or alkalinity of surfaces to be painted exceeds that permitted in manufacturer's written instructions.

E. Masonry Substrates: Remove efflorescence and chalk. Do not paint surfaces if moisture content or alkalinity of surfaces or mortar joints exceeds that permitted in manufacturer's written instructions.

F. Steel Substrates: Remove rust, loose mill scale, and shop primer if any. Clean using methods recommended in writing by paint manufacturer.

1. SSPC-SP 2, "Hand Tool Cleaning."
2. SSPC-SP 3, "Power Tool Cleaning."
3. SSPC-SP 7/NACE No. 4, "Brush-off Blast Cleaning."

4. SSPC-SP 11, "Power Tool Cleaning to Bare Metal."

G. Shop-Primed Steel Substrates: Clean field welds, bolted connections, and abraded areas of shop paint, and paint exposed areas with the same material as used for shop priming to comply with SSPC-PA 1 for touching up shop-primed surfaces.

H. Galvanized-Metal Substrates: Remove grease and oil residue from galvanized sheet metal by mechanical methods to produce clean, lightly etched surfaces that promote adhesion of subsequently applied paints.

I. Wood Substrates:

1. Scrape and clean knots. Before applying primer, apply coat of knot sealer recommended in writing by topcoat manufacturer for exterior use in paint system indicated.
2. Sand surfaces that will be exposed to view, and dust off.
3. Prime edges, ends, faces, undersides, and backsides of wood.
4. After priming, fill holes and imperfections in the finish surfaces with putty or plastic wood filler. Sand smooth when dried.

J. Plastic Trim Fabrication Substrates: Remove dust, dirt, and other foreign material that might impair bond of paints to substrates.

3.3 APPLICATION

A. Apply paints according to manufacturer's written instructions and recommendations in "MPI Manual."

1. Use applicators and techniques suited for paint and substrate indicated.
2. Paint surfaces behind movable items same as similar exposed surfaces. Before final installation, paint surfaces behind permanently fixed items with prime coat only.
3. Paint both sides and edges of exterior doors and entire exposed surface of exterior door frames.
4. Paint entire exposed surface of window frames and sashes, unless those surfaces have a factory finish.
5. Do not paint over labels of independent testing agencies or equipment name, identification, performance rating, or nomenclature plates.
6. Primers specified in painting schedules may be omitted on items that are factory primed or factory finished if acceptable to topcoat manufacturers.

B. Tint undercoats same color as topcoat, but tint each undercoat a lighter shade to facilitate identification of each coat if multiple coats of same material are to be applied. Provide sufficient difference in shade of undercoats to distinguish each separate coat.

C. If undercoats or other conditions show through topcoat, apply additional coats until cured film has a uniform paint finish, color, and appearance.

D. Apply paints to produce surface films without cloudiness, spotting, holidays, laps, brush marks, roller tracking, runs, sags, ropiness, or other surface imperfections. Cut in sharp lines and color breaks.

E. Painting Fire Suppression, Plumbing, HVAC, Electrical, Communication, and Electronic Safety and Security Work:

1. Paint the following work where exposed to view:
   a. Uninsulated metal piping.
   b. Uninsulated plastic piping.
   c. Pipe hangers and supports.
   d. Metal conduit.
   e. Plastic conduit.
   f. Tanks that do not have factory-applied final finishes.

3.4 FIELD QUALITY CONTROL

A. Dry Film Thickness Testing: Owner may engage the services of a qualified testing and inspecting agency to inspect and test paint for dry film thickness.

1. Contractor shall touch up and restore painted surfaces damaged by testing.
2. If test results show that dry film thickness of applied paint does not comply with paint manufacturer's written recommendations, Contractor shall pay for testing and apply additional coats as needed to provide dry film thickness that complies with paint manufacturer's written recommendations.

3.5 CLEANING AND PROTECTION

A. At end of each workday, remove rubbish, empty cans, rags, and other discarded materials from Project site.

B. After completing paint application, clean spattered surfaces. Remove spattered paints by washing, scraping, or other methods. Do not scratch or damage adjacent finished surfaces.

C. Protect work of other trades against damage from paint application. Correct damage to work of other trades by cleaning, repairing, replacing, and refinishing, as approved by Architect, and leave in an undamaged condition.

D. At completion of construction activities of other trades, touch up and restore damaged or defaced painted surfaces.

3.6 EXTERIOR PAINTING SCHEDULE

A. Concrete, Nontraffic Surfaces:

1. Latex System: 100% Acrylic.

   a. Prime Coat: Primer sealer, latex, exterior: Manufactures Recommended Primer.
   b. Intermediate Coat: Latex, exterior, matching topcoat.
   c. Topcoat: Latex, exterior, **satin, (Gloss Level 3-4)**:
      S-W A-100 Exterior Latex Satin, A82 Series.
      DE Spartashield Exterior Satin, SSHL30 Series.
      BM SuperSpec 100% Acrylic, 184 Series.

B. Ferrous Metal, Galvanized-Metal, and Aluminum Substrates:

1. Water-Based Light Industrial Coating System:

a. Prime Coat: Primer, rust-inhibitive, water based: Manufactures Recommended Primer.
b. Intermediate Coat: Water-based acrylic, interior, matching topcoat.
c. Topcoat: Water-based acrylic, **semi-gloss Gloss Level 5**:
S-W Pro Industrial Acrylic Semi-Gloss Coating, B66-650 Series.
DE UltraShield DTM Semi-Gloss, ULDM50 Series.
BM Super Spec HP DTM Semi-Gloss, P29 Series

C. Wood Substrates: Including exposed wood items not indicated to receive shop-applied finish.

1. Latex System: 100% Acrylic.

a. Prime Coat: Primer, latex for exterior wood: Manufactures Recommended Primer.
b. Intermediate Coat: Latex, exterior, matching topcoat.
c. Topcoat: Latex, exterior, **satin, (Gloss Level 3-4)**:
S-W A-100 Exterior Latex Satin, A82 Series.
DE Spartashield Exterior Satin, SSHL30 Series.
BM SuperSpec 100% Acrylic, 184 Series.

D. Exterior Gypsum Board Substrates:

1. Latex System: 100% Acrylic.

a. Prime Coat: Primer, bonding, water-based: Manufactures Recommended Primer.
b. Intermediate Coat: Latex, exterior, matching topcoat.
c. Topcoat: Latex, exterior, **satin, (Gloss Level 3-4)**:
S-W A-100 Exterior Latex Satin, A82 Series.
DE Spartashield Exterior Satin, SSHL30 Series.
BM SuperSpec 100% Acrylic, 184 Series

END OF SECTION 099113

SECTION 099123 - INTERIOR PAINTING

PART 1 - GENERAL

1.1 RELATED DOCUMENTS

A. Drawings and general provisions of the Contract, including General and Supplementary Conditions and Division 01 Specification Sections, apply to this Section.

1.2 SUMMARY

A. Section includes surface preparation and the application of paint systems on interior substrates:

1. Concrete.
2. Concrete masonry units (CMU).
3. Steel.
4. Galvanized metal.
5. Wood.
6. Gypsum board.
7. Cotton or canvas insulation covering.
8. ASJ insulation covering.

B. Related Requirements:

1. Section 051200 "Structural Steel Framing" for shop priming of metal substrates with primers specified in this Section.
2. Section 099653 "Elastomeric Coatings" for special-use coatings.
3. Section 099113 "Exterior Painting" for surface preparation and the application of paint systems on exterior substrates.

1.3 DEFINITIONS

A. Gloss Level 1: Not more than 5 units at 60 degrees and 10 units at 85 degrees, according to ASTM D 523, a matte flat finish.

B. Gloss Level 2: Not more than 10 units at 60 degrees and 10 to 35 units at 85 degrees, according to ASTM D 523, a high-side sheen flat, velvet-like finish.

C. Gloss Level 3: 10 to 25 units at 60 degrees and 10 to 35 units at 85 degrees, according to ASTM D 523, an eggshell finish.

D. Gloss Level 4: 20 to 35 units at 60 degrees and not less than 35 units at 85 degrees, according to ASTM D 523, a satin-like finish.

E. Gloss Level 5: 35 to 70 units at 60 degrees, according to ASTM D 523, a semi-gloss finish.

F. Gloss Level 6: 70 to 85 units at 60 degrees, according to ASTM D 523, a gloss finish.

1.4 ACTION SUBMITTALS

A. Product Data: For each type of product. Include preparation requirements and application instructions.

B. Samples for Initial Selection: For each type of topcoat product.

C. Samples for Verification: For each type of paint system and in each color and gloss of topcoat.

1. Submit 6 Samples on rigid backing, 8 inches (200 mm) square.
2. Label each coat of each Sample.
3. Label each Sample for location and application area.

D. Product List: For each product indicated, include the following:

1. Cross-reference to paint system and locations of application areas. Use same designations indicated on Drawings and in schedules.
2. VOC content.

1.5 CLOSEOUT SUBMITTALS

A. Coating Maintenance Manual: Provide coating maintenance manual including area summary with finish schedule, area detail designating location where each product/color/finish was used, product data pages, material safety data sheets, care and cleaning instructions, touch-up procedures, and color samples of each color and finish used.

1.6 MAINTENANCE MATERIAL SUBMITTALS

A. Furnish extra materials from the same product run that match products installed and that are packaged with protective covering for storage and identified with labels describing contents.

1. Paint: 1 gal. (3.8 L) of each material and color applied.

1.7 QUALITY ASSURANCE

A. Mockups: Apply mockups of each paint system indicated and each color and finish selected to verify preliminary selections made under Sample submittals and to demonstrate aesthetic effects and set quality standards for materials and execution.

1. Architect will select one surface to represent surfaces and conditions for application of each paint system specified in Part 3.

a. Vertical and Horizontal Surfaces: Provide samples of at least 100 sq. ft. (9 sq. m).
b. Other Items: Architect will designate items or areas required.

2. Final approval of color selections will be based on mockups.

a. If preliminary color selections are not approved, apply additional mockups of additional colors selected by Architect at no added cost to Owner.

3. Approval of mockups does not constitute approval of deviations from the Contract Documents contained in mockups unless Architect specifically approves such deviations in writing.
4. Subject to compliance with requirements, approved mockups may become part of the completed Work if undisturbed at time of Substantial Completion.

1.8 DELIVERY, STORAGE, AND HANDLING

A. Delivery and Handling: Deliver products to Project site in an undamaged condition in manufacturer's original sealed containers, complete with labels and instructions for handling, storing, unpacking, protecting, and installing. Packaging shall bear the manufacturer’s label with the following information:

1. Product name and type (description).
2. Batch date.
3. Color number.
4. VOC content.
5. Environmental handling requirements.
6. Surface preparation requirements.
7. Application instructions.

B. Store materials not in use in tightly covered containers in well-ventilated areas with ambient temperatures continuously maintained at not less than 45 deg F (7 deg C).

1. Maintain containers in clean condition, free of foreign materials and residue.
2. Remove rags and waste from storage areas daily.

1.9 FIELD CONDITIONS

A. Apply paints only when temperature of surfaces to be painted and ambient air temperatures are between 50 and 95 deg F (10 and 35 deg C).

B. Do not apply paints when relative humidity exceeds 85 percent; at temperatures less than 5 deg F (3 deg C) above the dew point; or to damp or wet surfaces.

PART 2 - PRODUCTS

2.1 MANUFACTURERS

A. Basis-of-Design Product: Subject to compliance with requirements, provide Sherwin-Williams Company products indicated or comparable product from one of the following:

1. Benjamin Moore & Co.
2. Dunn-Edwards.
3. Sherwin-Williams.

B. Source Limitations: Obtain paint materials from single source from single listed manufacturer.

1. Manufacturer's designations listed on a separate color schedule are for color reference only and do not indicate prior approval.

2.2 PAINT, GENERAL

A. MPI Standards: Provide products that comply with MPI standards indicated and that are listed in its "MPI Approved Products List."

B. Material Compatibility:

1. Provide materials for use within each paint system that are compatible with one another and substrates indicated, under conditions of service and application as demonstrated by manufacturer, based on testing and field experience.
2. For each coat in a paint system, provide products recommended in writing by manufacturers of topcoat for use in paint system and on substrate indicated.

C. VOC Content: Products shall comply with VOC limits of authorities having jurisdiction **and, for interior paints and coatings applied at Project site, the following VOC limits, exclusive of colorants added to a tint base, when calculated according to 40 CFR 59, Subpart D (EPA Method 24)**.

1. Flat Paints and Coatings: 50 g/L.
2. Nonflat Paints and Coatings: 150 g/L.
3. Dry-Fog Coatings: 400 g/L.
4. Primers, Sealers, and Undercoaters: 200 g/L.
5. Anticorrosive and Antirust Paints Applied to Ferrous Metals: 250 g/L.
6. Zinc-Rich Industrial Maintenance Primers: 340 g/L.
7. Pretreatment Wash Primers: 420 g/L.
8. Floor Coatings: 100 g/L.
9. Shellacs, Clear: 730 g/L.
10. Shellacs, Pigmented: 550 g/L.

D. Low-Emitting Materials: Interior paints and coatings shall comply with the testing and product requirements of the California Department of Health Services' "Standard Practice for the Testing of Volatile Organic Emissions from Various Sources Using Small-Scale Environmental Chambers."

E. Colors: As indicated in a color schedule.

1. 10 percent of surface area will be painted with deep tones.

2.3 SOURCE QUALITY CONTROL

A. Testing of Paint Materials: Owner reserves the right to invoke the following procedure:

1. Owner will engage the services of a qualified testing agency to sample paint materials. Contractor will be notified in advance and may be present when samples are taken. If paint materials have already been delivered to Project site, samples may be taken at Project site. Samples will be identified, sealed, and certified by testing agency.

2. Testing agency will perform tests for compliance with product requirements.
3. Owner may direct Contractor to stop applying coatings if test results show materials being used do not comply with product requirements. Contractor shall remove noncomplying paint materials from Project site, pay for testing, and repaint surfaces painted with rejected materials. Contractor will be required to remove rejected materials from previously painted surfaces if, on repainting with complying materials, the two paints are incompatible.

PART 3 - EXECUTION

3.1 EXAMINATION

A. Examine substrates and conditions, with Applicator present, for compliance with requirements for maximum moisture content and other conditions affecting performance of the Work. Verify suitability of substrates, including surface conditions and compatibility with existing finishes and primers. Where acceptability of substrate conditions is in question, apply samples and perform in-situ testing to verify compatibility, adhesion, and film integrity of new paint application.

1. Report, in writing, conditions that may affect application, appearance, or performance of paint.

B. Substrate Conditions:

1. Maximum Moisture Content of Substrates: When measured with an electronic moisture meter as follows:

a. Concrete: 12 percent.
b. Masonry (Clay and CMU): 12 percent.
c. Wood: 15 percent.
d. Gypsum Board: 12 percent.
e. Plaster: 12 percent.

2. Gypsum Board Substrates: Verify that finishing compound is sanded smooth.
3. Plaster Substrates: Verify that plaster is fully cured.
4. Spray-Textured Ceiling Substrates: Verify that surfaces are dry.

C. Proceed with coating application only after unsatisfactory conditions have been corrected; application of coating indicates acceptance of surfaces and conditions.

3.2 PREPARATION

A. Comply with manufacturer's written instructions and recommendations in "MPI Manual" applicable to substrates indicated.

B. Remove hardware, covers, plates, and similar items already in place that are removable and are not to be painted. If removal is impractical or impossible because of size or weight of item, provide surface-applied protection before surface preparation and painting.

1. After completing painting operations, use workers skilled in the trades involved to reinstall items that were removed. Remove surface-applied protection if any.

C. Clean substrates of substances that could impair bond of paints, including dust, dirt, oil, grease, and incompatible paints and encapsulants.

1. Remove incompatible primers and reprime substrate with compatible primers or apply tie coat as required to produce paint systems indicated.

D. Concrete Substrates: Remove release agents, curing compounds, efflorescence, and chalk. Do not paint surfaces if moisture content or alkalinity of surfaces to be painted exceeds that permitted in manufacturer's written instructions.

1. Concrete Floors: Remove oil, dust, grease, dirt, and other foreign materials. Comply with SSPC-SP-13/NACE 6 or ICRI 03732.

E. Masonry Substrates: Remove efflorescence and chalk. Do not paint surfaces if moisture content or alkalinity of surfaces or mortar joints exceed that permitted in manufacturer's written instructions.

F. Steel Substrates: Remove rust, loose mill scale, and shop primer, if any. Clean using methods recommended in writing by paint manufacturer.

1. SSPC-SP 2, "Hand Tool Cleaning."
2. SSPC-SP 3, "Power Tool Cleaning."
3. SSPC-SP 7/NACE No. 4, "Brush-off Blast Cleaning."
4. SSPC-SP 11, "Power Tool Cleaning to Bare Metal."

G. Shop-Primed Steel Substrates: Clean field welds, bolted connections, and abraded areas of shop paint, and paint exposed areas with the same material as used for shop priming to comply with SSPC-PA 1 for touching up shop-primed surfaces.

H. Galvanized-Metal Substrates: Remove grease and oil residue from galvanized sheet metal fabricated from coil stock by mechanical methods to produce clean, lightly etched surfaces that promote adhesion of subsequently applied paints.

I. Wood Substrates:

1. Scrape and clean knots, and apply coat of knot sealer before applying primer.
2. Sand surfaces that will be exposed to view, and dust off.
3. Prime edges, ends, faces, undersides, and backsides of wood.
4. After priming, fill holes and imperfections in the finish surfaces with putty or plastic wood filler. Sand smooth when dried.

J. Cotton or Canvas Insulation Covering Substrates: Remove dust, dirt, and other foreign material that might impair bond of paints to substrates.

3.3 APPLICATION

A. Apply paints according to manufacturer's written instructions and to recommendations in "MPI Manual."

1. Use applicators and techniques suited for paint and substrate indicated.
2. Paint surfaces behind movable equipment and furniture same as similar exposed surfaces. Before final installation, paint surfaces behind permanently fixed equipment or furniture with prime coat only.
3. Paint front and backsides of access panels, removable or hinged covers, and similar hinged items to match exposed surfaces.
4. Do not paint over labels of independent testing agencies or equipment name, identification, performance rating, or nomenclature plates.
5. Primers specified in painting schedules may be omitted on items that are factory primed or factory finished if acceptable to topcoat manufacturers.

B. Tint each undercoat a lighter shade to facilitate identification of each coat if multiple coats of same material are to be applied. Tint undercoats to match color of topcoat, but provide sufficient difference in shade of undercoats to distinguish each separate coat.

C. If undercoats or other conditions show through topcoat, apply additional coats until cured film has a uniform paint finish, color, and appearance.

D. Apply paints to produce surface films without cloudiness, spotting, holidays, laps, brush marks, roller tracking, runs, sags, ropiness, or other surface imperfections. Cut in sharp lines and color breaks.

E. Painting Fire Suppression, Plumbing, HVAC, Electrical, Communication, and Electronic Safety and Security Work:

1. Paint the following work where exposed in equipment rooms:
   a. Uninsulated metal piping.
   b. Uninsulated plastic piping.
   c. Pipe hangers and supports.
   d. Metal conduit.
   e. Plastic conduit.
   f. Tanks that do not have factory-applied final finishes.
   g. Duct, equipment, and pipe insulation having cotton or canvas insulation covering or other paintable jacket material.

2. Paint the following work where exposed in occupied spaces:

   a. Equipment, including panelboards.
   b. Uninsulated metal piping.
   c. Uninsulated plastic piping.
   d. Pipe hangers and supports.
   e. Metal conduit.
   f. Plastic conduit.
   g. Duct, equipment, and pipe insulation having cotton or canvas insulation covering or other paintable jacket material.
   h. Other items as directed by Architect.

3. Paint portions of internal surfaces of metal ducts, without liner, behind air inlets and outlets that are visible from occupied spaces; paint “black”.

3.4 FIELD QUALITY CONTROL

A. Dry Film Thickness Testing: Owner may engage the services of a qualified testing and inspecting agency to inspect and test paint for dry film thickness.

1. Contractor shall touch up and restore painted surfaces damaged by testing.
2. If test results show that dry film thickness of applied paint does not comply with paint manufacturer's written recommendations, Contractor shall pay for testing and apply additional coats as needed to provide dry film thickness that complies with paint manufacturer's written recommendations.

3.5 CLEANING AND PROTECTION

A. At end of each workday, remove rubbish, empty cans, rags, and other discarded materials from Project site.

B. After completing paint application, clean spattered surfaces. Remove spattered paints by washing, scraping, or other methods. Do not scratch or damage adjacent finished surfaces.

C. Protect work of other trades against damage from paint application. Correct damage to work of other trades by cleaning, repairing, replacing, and refinishing, as approved by Architect, and leave in an undamaged condition.

D. At completion of construction activities of other trades, touch up and restore damaged or defaced painted surfaces.

3.6 INTERIOR PAINTING SCHEDULE

A. Concrete Substrates, Nontraffic Surfaces:

1. Latex System: Anti-Microbial, Zero VOC Finish.

   a. PrimeCoat: Primer sealer, latex, interior: Manufactures Recommended Primer.
   b. Intermediate Coat: Latex, interior, matching topcoat.
   c. Topcoat: Latex, interior, **semi-gloss**, **Gloss Level 5:**
      S-W ProMar 200 Zero VOC Latex Semi-Gloss, B31-2600 Series.
      DE Suprema Semi-Gloss, SPMA50 Series.
      BM Ultra Spec 500, N539 Series.

2. Water-Based Light Industrial Coating System: PreCatalyzed Epoxy Finish.

   a. Prime Coat: Primer sealer, latex, interior: Manufactures Recommended Primer.
   b. Intermediate Coat: Light industrial coating, interior, water based, matching topcoat.
   c. Topcoat: Light industrial coating, interior, water based, **semi-gloss Gloss Level 5**:
      S-W Pro Industrial Pre-Catalyzed Water Based Epoxy, K46-151 Series.

DE UltraShield DTM Semi-Gloss, ULDM50 Series.
BM Corotech Pre-Catalyzed Water Based Epoxy, V341 Series.

3. Two-Component Epoxy and Epoxy High Build Systems for Non-Traffic Surfaces.

B. Concrete Substrates, Pedestrian Traffic Surfaces:

1. Latex Floor Enamel System:

a. First Coat: Floor paint, latex, slip-resistant, matching topcoat.
b. Topcoat: Floor paint, latex, slip-resistant, low gloss Gloss Level 3:
S-W ArmorSeal Tread-Plex, B90 Series, at 1.5 to 2.0 mils dry per coat.

2. Clear Acrylic System, Gloss Finish:

a. Two Coats: S-W H&C Concrete Sealer Wet Look Water Base.

C. Metal Substrates (Aluminum, Steel, Galvanized Steel):

1. Latex System:

a. Prime Coat: Primer, rust-inhibitive, water based: Manufactures Recommended Primer.
b. Intermediate Coat: Water-based acrylic, interior, matching topcoat.
c. Topcoat: Water-based acrylic, **semi-gloss Gloss Level 6**:
S-W Pro Industrial Acrylic Semi-Gloss Coating, B66-650 Series.
DE UltraShield DTM Semi-Gloss, ULDM50 Series.
BM Super Spec HP DTM Semi-Gloss, P29 Series.

2. Water-Based Dry-Fall System:
a. Prime Coat: Primer, rust-inhibitive, water based: Manufactures Recommended Primer as needed.
b. Top Coat: Dry-fall latex, **eggshell**:
S-W Pro Industrial Waterborne Acrylic DryFall Eg-Shel, B42 Series.
DE Aqua Dryfall Eggshell, 30 Series.
BM Super Kote 5000 Dryfall Eggshell, 122-1 Series.

D. Wood Substrates: Including exposed wood items not indicated to receive shop-applied finish.

1. Latex System: Anit-Microbial, Zero VOC Finish

a. Prime Coat: Primer sealer, latex, interior: Manufactures Recommended Primer.
b. Intermediate Coat: Latex, interior, matching topcoat.
c. Topcoat: Latex, interior, **semi-gloss**, **Gloss Level 6:**
S-W ProMar 200 Zero VOC Latex Semi-Gloss, B31-2600 Series.
DE Suprema Semi-Gloss, SPMA50 Series.
BM Ultra Spec 500, N539 Series.

E. Gypsum Board Substrates: Anit-Microbial, Zero VOC Finish

1. Latex System:

a. Prime Coat: Primer, latex, interior: Manufactures Recommended Primer.
b. Intermediate Coat: Latex, interior, matching topcoat.
c. Topcoat: Latex, interior, **semi-gloss**, **Gloss Level 5:**
S-W ProMar 200 Zero VOC Latex Semi-Gloss, B31-2600 Series.
DE Suprema Semi-Gloss, SPMA50 Series.
BM Ultra Spec 500, N539 Series.

END OF SECTION 099123

SECTION 099653 - ELASTOMERIC COATINGS

PART 1 - GENERAL

1.1 RELATED DOCUMENTS

A. Drawings and general provisions of the Contract, including General and Supplementary Conditions and Division 01 Specification Sections, apply to this Section.

1.2 SUMMARY

A. Section includes surface preparation and application of elastomeric coatings to the following exterior substrates:

1. Concrete.
2. Concrete unit masonry.
3. Stucco.

1.3 ACTION SUBMITTALS

A. Product Data: For each type of product.

1. Include printout of current "MPI Approved Products List" for each product category specified, with the proposed product highlighted.
2. Indicate VOC content.

B. Samples for Initial Selection: For each type of elastomeric coating.

C. Samples for Verification: For each type of elastomeric coating indicated and in each color and gloss.

1. Submit Samples on same type of substrate as that to receive application, 8 inches (200-mm) square.
2. Apply coats on Samples in steps to show each separate coat, including primers and block fillers as applicable.
3. Label each coat of each Sample.
4. Label each Sample for location and application area.

D. Product List: Cross-reference to paint system and locations of application areas. Use same designations indicated on Drawings and in schedules. Include color designations.

1.4 MAINTENANCE MATERIAL SUBMITTALS

A. Furnish extra materials, from the same product run, that match products installed and that are packaged with protective covering for storage and identified with labels describing contents.

1. Quantity: Furnish an additional 1 gal. (3.8 L) of each material, color, and texture applied.

1.5 QUALITY ASSURANCE

A. Mockups: Apply mockups of each paint system indicated and each color and finish selected to verify preliminary selections made under Sample submittals and to demonstrate aesthetic effects and set quality standards for materials and execution.

1. Architect will select one surface to represent surfaces and conditions for application of each paint system.

a. Vertical and Horizontal Surfaces: Provide samples of at least 100 sq. ft (9 sq. m).
b. Other Items: Architect will designate items or areas required.

2. Final approval of color selections will be based on mockups.

a. If preliminary color selections are not approved, apply additional mockups of additional colors selected by Architect at no added cost to Owner.

3. Approval of mockups does not constitute approval of deviations from the Contract Documents contained in mockups unless Architect specifically approves such deviations in writing.
4. Subject to compliance with requirements, approved mockups may become part of the completed Work if undisturbed at time of Substantial Completion.

1.6 DELIVERY, STORAGE, AND HANDLING

A. Store materials not in use in tightly covered containers in well-ventilated areas with ambient temperatures continuously maintained at not less than 45 deg F (7 deg C).

1. Maintain containers in clean condition, free of foreign materials and residue.
2. Remove rags and waste from storage areas daily.

1.7 FIELD CONDITIONS

A. Apply coatings only when temperature of surfaces to be coated and ambient air temperatures are between 50 and 90 deg F (10 and 32 deg C) unless otherwise permitted by manufacturer's written instructions.

B. Do not apply coatings in snow, rain, fog, or mist; when relative humidity exceeds 85 percent; at temperatures less than 5 deg F (3 deg C) above the dew point; or to damp or wet surfaces.

C. Allow wet surfaces to dry thoroughly and attain temperature and conditions specified before starting or continuing coating operation.

1.8 WARRANTY

A. Special Warranty: Manufacturer's standard form in which manufacturer agrees to repair or replace elastomeric coatings that fail within specified warranty period.

1. Failures include, but are not limited to, the following:

a. Water penetration through the coating.
b. Deterioration of coating beyond normal weathering.

2. Warranty Period: Five years from date of Substantial Completion.

PART 2 - PRODUCTS

2.1 MANUFACTURERS

A. Basis-of-Design Product: Subject to compliance with requirements, provide The Sherwin-Williams Company products indicated or comparable product from one of the following:

1. Benjamin Moore & Co.
2. Dunn-Edwards
3. Tnemec Inc.
4. Sherwin-Williams

2.2 MATERIALS

A. MPI Standards: Products shall comply with MPI standards indicated and shall be listed in its "MPI Approved Products List."

B. Material Compatibility:

1. Materials for use within each paint system shall be compatible with one another and substrates indicated, under conditions of service and application as demonstrated by manufacturer, based on testing and field experience.
2. For each coat in a paint system, products shall be recommended in writing by manufacturers of topcoat for use in paint system and on substrate indicated.

C. Colors: As selected by Architect from manufacturer's full range.

1. 30 percent of surface area will be painted with deep tones.

D. Crack Fillers: Elastomeric coating manufacturer's recommended, factory-formulated crack fillers or sealants, including crack filler primers, compatible with substrate and other materials indicated.

E. Primer: Elastomeric coating manufacturer's recommended, factory-formulated, alkali-resistant primer compatible with substrate and other materials indicated.

F. Concrete Unit Masonry Block Filler: Elastomeric coating manufacturer's recommended, factory-formulated, high-performance latex block filler compatible with substrate and other materials indicated.

PART 3 - EXECUTION

3.1 EXAMINATION

A. Examine substrates and conditions, with Applicator present, for compliance with manufacturer's requirements for maximum moisture content, alkalinity, and other conditions affecting performance of work.

B. Begin coating only when moisture content of substrate is 12 percent or less when measured with an electronic moisture meter.

C. Begin coating no sooner than 28 days after substrate is constructed and is visually dry on both sides.

D. Verify that substrate is within the range of alkalinity recommended by manufacturer.

E. Verify suitability of substrates, including surface conditions and compatibility with existing finishes and primers.

F. Begin coating application only after unsatisfactory conditions have been corrected and surfaces are dry.

3.2 PREPARATION

A. Comply with manufacturer's written instructions and recommendations in the "MPI Architectural Painting Specification Manual" applicable to substrates and coating systems indicated.

B. Remove hardware and hardware accessories, plates, machined surfaces, light fixtures, and similar items already installed that are not to be coated. If removal is impractical or impossible because of size or weight of item, provide surface-applied protection before surface preparation and coating.

1. After completing coating operations, use workers skilled in the trades involved to reinstall items that were removed. Remove surface-applied protection if any.

C. Clean substrates of substances that could impair bond of coatings, including dirt, oil, grease, and incompatible paints and encapsulants. Do not coat surfaces if moisture content or alkalinity of surfaces to be coated exceeds that permitted in manufacturer's written instructions.

1. Remove incompatible primers and reprime substrate with compatible primers as required to produce coating systems indicated.
2. Perform cleaning and coating application so dust and other contaminants from cleaning process will not fall on wet, newly coated surfaces.

D. Crack Repair: Fill cracks according to manufacturer's written instructions before coating surfaces.

3.3 APPLICATION

A. Apply elastomeric coatings according to manufacturer's written instructions.

1. Use equipment and techniques best suited for substrate and type of material being applied.
2. Coat surfaces behind movable items the same as similar exposed surfaces.
3. Apply each coat separately according to manufacturer's written instructions.

B. Primers: Apply at a rate to ensure complete coverage.

C. Block Fillers: Apply at a rate to ensure complete coverage with pores filled.

D. Elastomeric Finish Coat(s): Minimum two coats with a total dry film thickness of 12 to 16 mils (0.41 to 0.45 mm)

E. If undercoats or other conditions show through topcoat, apply additional coats until cured film has a uniform finish, color, and appearance.

F. Apply coatings to produce surface films without cloudiness, spotting, holidays, laps, brush marks, roller tracking, runs, sags, ropiness, or other surface imperfections. Cut in sharp lines and color breaks.

G. Apply coatings to prepared surfaces as soon as practicable after preparation and before subsequent surface soiling or deterioration.

H. Spray Application: Use spray equipment for application only when permitted by authorities having jurisdiction. Wherever spray application is used, do not double back with spray equipment to build up film thickness of two coats in one pass.

3.4 FIELD QUALITY CONTROL

A. Testing of Paint Materials: Owner reserves the right to invoke the following testing procedures:

1. Owner will engage the services of a qualified testing agency to sample materials being used. Samples of material delivered to Project site will be taken, identified, sealed, and certified in presence of Contractor.
2. Testing agency will perform tests for compliance of materials with product requirements.
3. Owner may direct Contractor to stop coating application if test results show materials being used do not comply with requirements. Remove noncomplying materials from

Project site, pay for testing, and recoat surfaces that were coated with rejected materials. Remove rejected materials from previously coated surfaces if, on recoating with complying materials, the two coatings are incompatible.

B. Field Testing and Inspection: Owner reserves the right to engage the services of a qualified testing agency to verify installed thickness of elastomeric coatings.

3.5 CLEANING AND PROTECTION

A. At end of each workday, remove rubbish, empty cans, rags, and other discarded materials from Project site.

B. After completing coating application, clean spattered surfaces. Remove spattered coatings by washing, scraping, or other methods. Do not scratch or damage adjacent finished surfaces.

C. Protect work of other trades against damage from coating application. Correct damage to work of other trades by cleaning, repairing, replacing, and refinishing, as approved by Architect, and leave in an undamaged condition.

D. At completion of construction activities, touch up and restore damaged or defaced coated surfaces.

3.6 ELASTOMERIC COATING SCHEDULE

A. Concrete Substrates:

1. Acrylic Textured Coating System:

a. Prime Coat: As recommended in writing by topcoat manufacturer.

1) SW Loxon Masonry primer: Ultra-Crete can be used without a primer on surfaces with a pH between 6 and 9.

b. Topcoat: Acrylic Textured, pigmented, exterior, water-based, Low Eg-Shell coating.

1) SW Ultra-Crete, A44W800 Series, Medium

50-80 sq ft/gal depending on substrate porosity and texture size.

B. Stucco Substrates:

1. Elastomeric Coating System: Smooth (two coats required, 6.4 to 8.3 mils dft per coat)

a. Prime Coat: As recommended in writing by topcoat manufacturer.
b. Topcoat: Elastomeric, pigmented, exterior, water-based, flat coating.

1) SW Loxon XP Waterproofing System, A24-1400 Series

c. Topcoat: Elastomeric, pigmented, exterior, water-based, flat coating.

1) SW Loxon XP Waterproofing System, A24-1400 Series

END OF SECTION 099653

SECTION 101400 - SIGNAGE

PART 1 - GENERAL

1.1 RELATED DOCUMENTS

A. Drawings and general provisions of the Contract, including General and Supplementary Conditions and Division 01 Specification Sections, apply to this Section.

1.2 SUMMARY

A. This Section includes the following:

1. Plaques.
2. Dimensional characters.
3. Panel signs.

B. Related Sections include the following:

1. Division 01 Section "Temporary Facilities and Controls" for temporary Project identification signs and for temporary information and directional signs.
2. Division 22 Section "Identification for Plumbing Piping and Equipment" for labels, tags, and nameplates for plumbing systems and equipment.
3. Division 23 Section "Identification for HVAC Piping and Equipment" for labels, tags, and nameplates for HVAC systems and equipment.
4. Division 26 Section "Identification for Electrical Systems" for labels, tags, and nameplates for electrical equipment.
5. Division 26 Section "Interior Lighting" for illuminated Exit signs.

1.3 DEFINITIONS

A. ADA-ABA Accessibility Guidelines: U.S. Architectural & Transportation Barriers Compliance Board's "Americans with Disabilities Act (ADA) Accessibility Guidelines for Buildings and Facilities; Architectural Barriers Act (ABA) Accessibility Guidelines."

1.4 SUBMITTALS

A. Product Data: For each type of product indicated.

B. Shop Drawings: Show fabrication and installation details for signs.

1. Show sign mounting heights, locations of supplementary supports to be provided by others, and accessories.
2. Provide message list, typestyles, graphic elements, including tactile characters and Braille, and layout for each sign.

C. Samples for Initial Selection: Manufacturer's color charts consisting of actual units or sections of units showing the full range of colors available for the following:

1. Aluminum.
2. Acrylic sheet.
3. Melamine plastic laminate

D. Samples for Verification: For each of the following products and for the full range of color, texture, and sign material indicated, of sizes indicated:

1. Plaque: Rubbing of full size plaque mock-up.

E. Sign Schedule: Use same designations indicated on Drawings.

1.5 QUALITY ASSURANCE

A. Installer Qualifications: An employer of workers trained and approved by manufacturer.

B. Fabricator Qualifications: Shop that employs skilled workers who custom-fabricate products similar to those required for this Project and whose products have a record of successful in-service performance.

C. Source Limitations for Signs: Obtain each sign type indicated from one source from a single manufacturer.

D. Regulatory Requirements: Comply with applicable provisions in ADA-ABA Accessibility Guidelines and ICC/ANSI A117.1.

1.6 PROJECT CONDITIONS

A. Weather Limitations: Proceed with installation only when weather conditions permit installation of signs in exterior locations to be performed according to manufacturers' written instructions and warranty requirements.

B. Field Measurements: Verify recess openings by field measurements before fabrication and indicate measurements on Shop Drawings.

1.7 COORDINATION

A. Coordinate placement of anchorage devices with templates for installing signs.

PART 2 - PRODUCTS

2.1 MATERIALS

A. Aluminum Castings: ASTM B 26/B 26M, of alloy and temper recommended by sign manufacturer for casting process used and for use and finish indicated.

B. Acrylic Sheet: ASTM D 4802, Category A-1 (cell-cast sheet), Type UVA (UV absorbing).

C. Melamine plastic laminate, approximately 1/8” thick (1/4” thick for slot signs), with background painted a contrasting color and rated non-static, fire-retardant and self-extinguishing. Plastic laminate will be impervious to most acids, alkalies, alcohol, solvents, abrasives and boiling water.

2.2 PLAQUES

A. Available Manufacturers: Subject to compliance with requirements, manufacturers offering products that may be incorporated into the Work include, but are not limited to, the following:

1. Advance Corporation; Braille-Tac Division.
2. A. R. K. Ramos.
3. Gemini Incorporated.
4. Matthews International Corporation; Bronze Division.
5. Metal Arts; Div. of L&H Mfg. Co.
6. Mills Manufacturing Company.
7. Nelson-Harkins Industries.
8. Southwell Company (The).

B. Cast Plaques: Provide castings free of pits, scale, sand holes, and other defects, as follows:

1. Plaque Material: Aluminum.
2. Background Texture: Manufacturer's standard leatherette texture.
3. Border Style: Projected bevel.
4. Mounting: Rosettes and fasteners matching plaque finish for substrates encountered.

C. Plaque Schedule:

1. Plaque Type:

a. Plaque Size: 24”x 30”.
b. Character Size: As selected by the Architect.
c. Character Finish/Color: As selected by the Architect.
d. Text/Message: Furnished later by the Owner.
e. Location: As indicated on drawings.
f. Quantity: One.

2.3 DIMENSIONAL CHARACTERS

A. Available Manufacturers: Subject to compliance with requirements, manufacturers offering products that may be incorporated into the Work include, but are not limited to, the following:

1. ACE Sign Systems, Inc.
2. Advance Corporation; Braille-Tac Division.
3. A. R. K. Ramos.
4. ASI-Modulex, Inc.
5. Bunting Graphics, Inc.

6. Charleston Industries, Inc.
7. Gemini Incorporated.
8. Grimco, Inc.
9. Innerface Sign Systems, Inc.
10. Metal Arts; Div. of L&H Mfg. Co.
11. Mills Manufacturing Company.
12. Mohawk Sign Systems.
13. Nelson-Harkins Industries.
14. Signature Signs, Incorporated.
15. Southwell Company (The).

B. Cast Characters: Produce characters with smooth flat faces, sharp corners, and precisely formed lines and profiles, free of pits, scale, sand holes, and other defects. Cast lugs into back of characters and tap to receive threaded mounting studs. Alloy and temper recommended by sign manufacturer for casting process used and for use and finish indicated. Comply with the following requirements.

1. Character Material: Aluminum.
2. Height: As indicated on the drawings.
3. Color(s): As selected by Architect from manufacturer's full range.
4. Mounting: Concealed studs for projected mounting, noncorroding, for substrates encountered.

C. Dimensional Character Sign Schedule:

1. Sign Type:

a. Letter/Number Size: As indicated on the drawings.
b. Text/Message: As indicated on the drawings.
c. Location: As indicated on the drawings.

2.4 PANEL SIGNS

A. Basis-of-Design Product: Subject to compliance with requirements, provide HC 300 ADA System by Best Manufacturing Sign Systems, or a comparable product by one of the following:

1. ACE Sign Systems, Inc.
2. Advance Corporation; Braille-Tac Division.
3. Allen Industries Architectural Signage
4. Allenite Signs; Allen Marking Products, Inc.
5. APCO Graphics, Inc.
6. ASI-Modulex, Inc.
7. Best
8. Bunting Graphics, Inc.
9. Fossil Industries, Inc.
10. Gemini Incorporated.
11. Grimco, Inc.
12. Innerface Sign Systems, Inc.
13. InPro Corporation
14. Matthews International Corporation; Bronze Division.

15. Mills Manufacturing Company.
16. Mohawk Sign Systems.
17. Nelson-Harkins Industries.
18. Seton Identification Products.
19. Signature Signs, Incorporated.
20. Supersine Company (The)

B. Interior Panel Signs: Provide smooth sign panel surfaces constructed to remain flat under installed conditions within a tolerance of plus or minus 1/16 inch (1.5 mm) measured diagonally from corner to corner, complying with the following requirements:

1. Melamine plastic laminate.
2. Edge Condition: Square cut.
3. Corner Condition: ½” radius
4. All letters, numbers, and/or symbols shall contrast with their background- either light characters on a dark background or dark characters on a light background. Characters and background shall have a matte finish.
5. Mounting: Unframed.

    a. Wall mounted with two-face tape.

6. Color: As selected by Architect from manufacturer's full range.
7. Tactile Characters: Characters and Grade 2 Braille raised 1/32 inch (0.8 mm) above surface with contrasting colors, 3/8” wide, with raised perimeter border
8. Room numbers shall be 5/8” high. Lettering for room usage and directional identification shall be 5/8” high.
9. Provide blank backup panel for signs mounted on glass.

C. Tactile and Braille Sign: Manufacturer's standard process for producing text and symbols complying with ADA-ABA Accessibility Guidelines and with ICC/ANSI A117.1. Text shall be accompanied by Grade 2 Braille. Produce precisely formed characters with square-cut edges free from burrs and cut marks; Braille dots with domed or rounded shape.

D. Panel Sign Schedule:

1. Sign Type:

    a. Sign Size:

        Directional signs shall be 6” x 6”

        Room signs shall be 10” x 3”. Wording as directed by the Architect.

        All rooms shall receive a sign.

2.5 ACCESSORIES

A. Anchors and Inserts: Provide nonferrous-metal or hot-dip galvanized anchors and inserts for exterior installations and elsewhere as required for corrosion resistance. Use toothed steel or

lead expansion-bolt devices for drilled-in-place anchors. Furnish inserts, as required, to be set into concrete or masonry work.

2.6 FABRICATION

A. General: Provide manufacturer's standard signs of configurations indicated.

1. Conceal fasteners if possible; otherwise, locate fasteners where they will be inconspicuous.

2.7 FINISHES, GENERAL

A. Comply with NAAMM's "Metal Finishes Manual for Architectural and Metal Products" for recommendations for applying and designating finishes.

B. Protect mechanical finishes on exposed surfaces from damage by applying a strippable, temporary protective covering before shipping.

C. Appearance of Finished Work: Variations in appearance of abutting or adjacent pieces are acceptable if they are within one-half of the range of approved Samples. Noticeable variations in the same piece are not acceptable. Variations in appearance of other components are acceptable if they are within the range of approved Samples and are assembled or installed to minimize contrast.

2.8 ALUMINUM FINISHES

A. Baked-Enamel Finish: AA-C12C42R1x (Chemical Finish: cleaned with inhibited chemicals; Chemical Finish: acid-chromate-fluoride-phosphate conversion coating; Organic Coating: as specified below). Apply baked enamel complying with paint manufacturer's written instructions for cleaning, conversion coating, and painting.

1. Organic Coating: Thermosetting, modified-acrylic enamel primer/topcoat system complying with AAMA 2603 except with a minimum dry film thickness of 1.5 mils (0.04 mm), medium gloss.

PART 3 - EXECUTION

3.1 EXAMINATION

A. Examine substrates, areas, and conditions, with Installer present, for compliance with requirements for installation tolerances and other conditions affecting performance of work.

B. Verify that items, including anchor inserts, are sized and located to accommodate signs.

C. Proceed with installation only after unsatisfactory conditions have been corrected.

3.2 INSTALLATION

A. Locate signs and accessories where indicated, using mounting methods of types described and complying with manufacturer's written instructions.

1. Install signs level, plumb, and at heights indicated, with sign surfaces free of distortion and other defects in appearance.
2. Interior Wall Signs: Install signs on walls adjacent to latch side of door where applicable and to comply with Texas Accessibility Standards. Where not indicated or possible, such as double doors, install signs on nearest adjacent walls. Locate to allow approach within 3 inches (75 mm) of sign without encountering protruding objects or standing within swing of door.

B. Wall-Mounted Signs: Comply with sign manufacturer's written instructions except where more stringent requirements apply.

1. Two-Face Tape: Mount signs to smooth, nonporous surfaces. Do not use this method for vinyl-covered or rough surfaces.

C. Dimensional Characters: Mount characters using standard fastening methods to comply with manufacturer's written instructions for character form, type of mounting, wall construction, and condition of exposure indicated. Provide heavy paper template to establish character spacing and to locate holes for fasteners.

1. Projected Mounting: Mount characters at projection distance from wall surface indicated.

D. Cast-Metal Plaques: Mount plaques using standard fastening methods to comply with manufacturer's written instructions for type of wall surface indicated.

1. Face Mounting: Mount plaques using exposed fasteners with rosettes attached through face of plaque into wall surface.

3.3 CLEANING AND PROTECTION

A. After installation, clean soiled sign surfaces according to manufacturer's written instructions. Protect signs from damage until acceptance by Owner.

END OF SECTION 101400

SECTION 104413 - FIRE PROTECTION CABINETS

PART 1 - GENERAL

1.1 RELATED DOCUMENTS

A. Drawings and general provisions of the Contract, including General and Supplementary Conditions and Division 01 Specification Sections, apply to this Section.

1.2 SUMMARY

A. Section Includes:

1. Fire-protection cabinets for the following:

a. Portable fire extinguishers.

B. Related Requirements:

1. Section 104416 "Fire Extinguishers."
2. Section 211200 "Fire-Suppression Standpipes" for fire-hose connections.

1.3 ACTION SUBMITTALS

A. Product Data: For each type of product. Show door hardware, cabinet type, trim style, and panel style. Include roughing-in dimensions and details showing recessed-, semirecessed-, or surface-mounting method and relationships of box and trim to surrounding construction.

B. Product Schedule: For fire-protection cabinets. Indicate whether recessed, semirecessed, or surface mounted. Coordinate final fire-protection cabinet schedule with fire-extinguisher schedule to ensure proper fit and function.

1.4 CLOSEOUT SUBMITTALS

A. Maintenance Data: For fire-protection cabinets to include in maintenance manuals.

1.5 COORDINATION

A. Coordinate size of fire-protection cabinets to ensure that type and capacity of fire extinguishers indicated are accommodated.

B. Coordinate sizes and locations of fire-protection cabinets with wall depths.

1.6 SEQUENCING

A. Apply vinyl lettering on field-painted fire-protection cabinets after painting is complete.

PART 2 - PRODUCTS

2.1 PERFORMANCE REQUIREMENTS

A. Fire-Rated Fire-Protection Cabinets: Listed and labeled to comply with requirements in ASTM E 814 for fire-resistance rating of walls where they are installed.

2.2 FIRE-PROTECTION CABINET

A. Cabinet Type: Suitable for fire extinguisher

1. Products: Subject to compliance with requirements, available products that may be incorporated into the Work include, but are not limited to, the following:

a. Fire-End & Croker Corporation.
b. GMR International Equipment Corporation.
c. Guardian Fire Equipment, Inc.
d. JL Industries, Inc.; a division of the Activar Construction Products Group.
e. Larsens Manufacturing Company.
f. Modern Metal Products, Division of Technico Inc.
g. Nystrom, Inc.
h. Potter Roemer LLC.

B. Cabinet Construction: Nonrated.

C. Cabinet Material: Cold-rolled steel sheet

1. Shelf: Same metal and finish as cabinet.

D. Semirecessed Cabinet: One-piece combination trim and perimeter door frame overlapping surrounding wall surface with exposed trim face and wall return at outer edge (backbend).
1. Rolled-Edge Trim: 2-1/2-inch (64-mm)] backbend depth. (Cabinet and handle shall not protrude more than 4 inches total from the wall to comply with Texas Accessibility Standards)`

E. Cabinet Trim Material: Same material and finish as door.

F. Door Material: Steel sheet.

G. Door Style: Fully glazed panel with frame

H. Door Glazing: Tempered float glass (clear).

I. Door Hardware: Manufacturer's standard door-operating hardware of proper type for cabinet type, trim style, and door material and style indicated.

1. Provide projecting door pull and friction latch.
2. Provide manufacturer's standard hinge permitting door to open 180 degrees.

J. Accessories:

1. Mounting Bracket: Manufacturer's standard steel, designed to secure fire extinguisher to fire-protection cabinet, of sizes required for types and capacities of fire extinguishers indicated, with plated or baked-enamel finish.
2. Identification: Lettering complying with authorities having jurisdiction for letter style, size, spacing, and location. Locate as indicated.

   a. Identify fire extinguisher in fire-protection cabinet with the words "FIRE EXTINGUISHER”

      1) Location: Applied to cabinet glazing.
      2) Application Process: Pressure-sensitive vinyl letters].
      3) Lettering Color: Red
      4) Orientation: Vertical

K. Materials:

1. Cold-Rolled Steel: ASTM A 1008/A 1008M, Commercial Steel (CS), Type B.

   a. Finish: Baked enamel or powder coat.
   b. Color: White

2. Tempered Float Glass: ASTM C 1048, Kind FT, Condition A, Type I, Quality q3, 3 mm thick, Class 1 (clear).

2.3 FABRICATION

A. Fire-Protection Cabinets: Provide manufacturer's standard box (tub) with trim, frame, door, and hardware to suit cabinet type, trim style, and door style indicated.

1. Weld joints and grind smooth.
2. Provide factory-drilled mounting holes.
3. Prepare doors and frames to receive locks.

B. Cabinet Doors: Fabricate doors according to manufacturer's standards, from materials indicated and coordinated with cabinet types and trim styles.

1. Fabricate door frames with tubular stiles and rails and hollow-metal design, minimum 1/2 inch (13 mm) thick.
2. Miter and weld perimeter door frames.

C. Cabinet Trim: Fabricate cabinet trim in one piece with corners mitered, welded, and ground smooth.

2.4 GENERAL FINISH REQUIREMENTS

A. Comply with NAAMM's AMP 500, "Metal Finishes Manual for Architectural and Metal Products," for recommendations for applying and designating finishes.

B. Protect mechanical finishes on exposed surfaces of fire-protection cabinets from damage by applying a strippable, temporary protective covering before shipping.

C. Finish fire-protection cabinets after assembly.

D. Appearance of Finished Work: Noticeable variations in same piece are not acceptable. Variations in appearance of adjoining components are acceptable if they are within the range of approved Samples and are assembled or installed to minimize contrast.

PART 3 - EXECUTION

3.1 EXAMINATION

A. Examine roughing-in for hose [valves] [racks] and cabinets to verify actual locations of piping connections before cabinet installation.

B. Examine walls and partitions for suitable framing depth and blocking where semirecessed cabinets will be installed.

C. Proceed with installation only after unsatisfactory conditions have been corrected.

3.2 PREPARATION

A. Prepare recesses for semirecessed fire-protection cabinets as required by type and size of cabinet and trim style.

3.3 INSTALLATION

A. General: Install fire-protection cabinets in locations and at mounting heights indicated.

1. Fire-Protection Cabinets: 48 inches to top of handle from the finished floor (to comply with Texas Accessibility Standards)

B. Fire-Protection Cabinets: Fasten cabinets to structure, square and plumb.

C. Identification: Apply vinyl lettering at locations indicated.

3.4 ADJUSTING AND CLEANING

A. Remove temporary protective coverings and strippable films, if any, as fire-protection cabinets are installed unless otherwise indicated in manufacturer's written installation instructions.

B. Adjust fire-protection cabinet doors to operate easily without binding. Verify that integral locking devices operate properly.

C. On completion of fire-protection cabinet installation, clean interior and exterior surfaces as recommended by manufacturer.

D. Touch up marred finishes, or replace fire-protection cabinets that cannot be restored to factory-finished appearance. Use only materials and procedures recommended or furnished by fire-protection cabinet and mounting bracket manufacturers.

E. Replace fire-protection cabinets that have been damaged or have deteriorated beyond successful repair by finish touchup or similar minor repair procedures.

END OF SECTION 104413

SECTION 104416 - FIRE EXTINGUISHERS

PART 1 - GENERAL

1.1 RELATED DOCUMENTS

A. Drawings and general provisions of the Contract, including General and Supplementary Conditions and Division 01 Specification Sections, apply to this Section.

1.2 SUMMARY

A. Section includes portable, hand-carried fire extinguishers and mounting brackets for fire extinguishers.

B. Related Sections:

1. Division 10 Section "Fire Extinguisher Cabinets."

1.3 SUBMITTALS

A. Product Data: For each type of product indicated. Include rating and classification, material descriptions, dimensions of individual components and profiles, and finishes for fire extinguisher and mounting brackets.

B. Product Schedule: For fire extinguishers. Coordinate final fire extinguisher schedule with fire protection cabinet schedule to ensure proper fit and function. Use same designations indicated on Drawings.

C. Operation and Maintenance Data: For fire extinguishers to include in maintenance manuals.

D. Warranty: Sample of special warranty.

1.4 QUALITY ASSURANCE

A. NFPA Compliance: Fabricate and label fire extinguishers to comply with NFPA 10, "Portable Fire Extinguishers."

B. Fire Extinguishers: Listed and labeled for type, rating, and classification by an independent testing agency acceptable to authorities having jurisdiction.

1. Provide fire extinguishers approved, listed, and labeled by FMG.

1.5 COORDINATION

A. Coordinate type and capacity of fire extinguishers with fire protection cabinets to ensure fit and function.

1.6 WARRANTY

A. Special Warranty: Manufacturer's standard form in which manufacturer agrees to repair or replace fire extinguishers that fail in materials or workmanship within specified warranty period.

1. Failures include, but are not limited to, the following:

a. Failure of hydrostatic test according to NFPA 10.
b. Faulty operation of valves or release levers.

2. Warranty Period: Six years from date of Substantial Completion.

PART 2 - PRODUCTS

2.1 PORTABLE, HAND-CARRIED FIRE EXTINGUISHERS

A. Fire Extinguishers: Type, size, and capacity for each fire protection cabinet and mounting bracket indicated.

1. Manufacturers: Subject to compliance with requirements, available manufacturers offering products that may be incorporated into the Work include, but are not limited to, the following:

a. Amerex Corporation.
b. Ansul Incorporated; Tyco International Ltd.
c. Badger Fire Protection; a Kidde company.
d. Buckeye Fire Equipment Company.
e. Fire End & Croker Corporation.
f. J. L. Industries, Inc.; a division of Activar Construction Products Group.
g. Kidde Residential and Commercial Division; Subsidiary of Kidde plc.
h. Larsen's Manufacturing Company.
i. Moon-American.
j. Pem All Fire Extinguisher Corp.; a division of PEM Systems, Inc.
k. Potter Roemer LLC.
l. Pyro-Chem; Tyco Safety Products.

2. Valves: Manufacturer's standard.
3. Handles and Levers: Manufacturer's standard.
4. Instruction Labels: Include pictorial marking system complying with NFPA 10, Appendix B and bar coding for documenting fire extinguisher location, inspections, maintenance, and recharging.

B. Multipurpose Dry-Chemical Type in Steel Container: UL-rated 4-A:80-B:C, 10-lb (4.5-kg) nominal capacity, with monoammonium phosphate-based dry chemical in enameled-steel container.

PART 3 - EXECUTION

3.1 EXAMINATION

A. Examine fire extinguishers for proper charging and tagging.

1. Remove and replace damaged, defective, or undercharged fire extinguishers.

B. Proceed with installation only after unsatisfactory conditions have been corrected.

3.2 INSTALLATION

A. General: Install fire extinguishers and mounting brackets in locations indicated and in compliance with requirements of authorities having jurisdiction.

B. Mounting Brackets: Fasten mounting brackets to surfaces, square and plumb, at locations indicated.

END OF SECTION 104416

SECTION 105113 - METAL LOCKERS

PART 1 - GENERAL

1.1 RELATED DOCUMENTS

A. Drawings and general provisions of the Contract, including General and Supplementary Conditions and Division 01 Specification Sections, apply to this Section.

1.2 SUMMARY

A. Section Includes:
1. Welded corridor lockers.
2. Locker benches.

1.3 ACTION SUBMITTALS

A. Product Data: For each type of metal locker.

1. Include construction details, material descriptions, dimensions of individual components and profiles, and finishes for each type of metal locker and bench.

B. Shop Drawings: For metal lockers.

1. Include plans, elevations, sections, details, and attachments to other work.
2. Show locker trim and accessories.
3. Include locker identification system and numbering sequence.

C. Samples: For each color specified, in manufacturer's standard size.

D. Samples for Initial Selection: Manufacturer's color charts showing the full range of colors available.

E. Samples for Verification: For the following products, in manufacturer's standard size:

1. Lockers and equipment.
2. Locker benches.

F. Product Schedule: For lockers. Use same designations indicated on Drawings.

1.4 INFORMATIONAL SUBMITTALS

A. Qualification Data: For Installer.

B. Sample Warranty: For special warranty.

1.5 CLOSEOUT SUBMITTALS

A. Maintenance Data: For adjusting, repairing, and replacing locker doors and latching mechanisms to include in maintenance manuals.

1.6 MAINTENANCE MATERIAL SUBMITTALS

A. Furnish extra materials that match products installed and that are packaged with protective covering for storage and identified with labels describing contents.

1. Full-size units of the following metal locker hardware items equal to 10 percent of amount installed for each type and finish installed, but no fewer than five units:

a. Locks.
b. Identification plates.
c. Hooks.

1.7 DELIVERY, STORAGE, AND HANDLING

A. Do not deliver metal lockers until spaces to receive them are clean, dry, and ready for their installation.

1.8 FIELD CONDITIONS

A. Field Measurements: Verify actual dimensions of recessed openings by field measurements before fabrication.

1.9 COORDINATION

A. Coordinate sizes and locations of [concrete] [concrete masonry] [wood] bases for metal lockers.

B. Coordinate sizes and locations of framing, blocking, furring, reinforcements, and other related units of work specified in other Sections to ensure that metal lockers can be supported and installed as indicated.

1.10 WARRANTY

A. Special Warranty: Manufacturer agrees to repair or replace components of metal lockers that fail in materials or workmanship, excluding finish, within specified warranty period.

1. Failures include, but are not limited to, the following:

a. Structural failures.
b. Faulty operation of latches and other door hardware.

2. Damage from deliberate destruction and vandalism is excluded.
3. Warranty Period for Welded Metal Lockers: 10 years minimum from date of Substantial Completion.

PART 2 - PRODUCTS

2.1 MANUFACTURERS

A. Source Limitations: Obtain metal lockers, locker benches, and accessories from single source from single locker manufacturer.

2.2 PERFORMANCE REQUIREMENTS

A. Accessibility Requirements: For lockers indicated to be accessible, comply with applicable provisions in the Texas Accessibility Standards.1].

2.3 WELDED CORRIDOR LOCKERS

A. Products: Subject to compliance with requirements, available products that may be incorporated into the Work include, but are not limited to, the following:

1. List Industries Inc.; Marquis Booksafe III Lockers.
2. Lyon Workspace Products, LLC; All-Welded Lockers.
3. Penco Products, Inc.; All-Welded Lockers.
4. Pinnacle Lockers; All-Welded Lockers
5. Republic Storage Systems, LLC; All-Welded Lockers.

B. Doors: One piece; fabricated from 0.075-inch (1.90-mm) nominal-thickness steel sheet; formed into channel shape with double bend at vertical edges and with right-angle single bend at horizontal edges.

1. Reinforcement: Manufacturer's standard reinforcing angles, channels, or stiffeners for doors more than 15 inches (381 mm) wide; welded to inner face of doors.
2. Door Style: Vented panel as follows:

a. Louvered Vents: No fewer than six louver openings at top and bottom for single-tier, three louver openings at top and bottom for double-tier, two louver openings at top and bottom, or three louver openings at top or bottom, for triple-tier lockers.

C. Body: Assembled by welding body components together. Fabricate from unperforated steel sheet with thicknesses as follows:

1. Tops, Bottoms, and Sides: 0.060-inch (1.52-mm) nominal thickness.
2. Backs: 0.048-inch (1.21-mm) nominal thickness.
3. Shelves: 0.060-inch (1.52-mm) nominal thickness, with double bend at front and single bend at sides and back.

D. Frames: Channel formed; fabricated from 0.060-inch (1.52-mm) nominal-thickness steel sheet; lapped and factory welded at corners; with top and bottom main frames factory welded into vertical main frames. Form continuous, integral, full-height door strikes on vertical main frames.

1. Cross Frames between Tiers: Channel formed and fabricated from same material as main frames; welded to vertical main frames.

E. Hinges: Welded to door and attached to door frame with no fewer than two factory-installed rivets per hinge that are completely concealed and tamper resistant when door is closed; fabricated to swing 180 degrees.

1. Continuous Hinges: Manufacturer's standard, steel, full height.

F. Recessed Door Handle and Latch: Stainless-steel cup with integral door pull, recessed so locking device does not protrude beyond door face; pry and vandal resistant.

1. Multipoint Latching: Finger-lift latch control designed for use with padlocks; positive automatic latching.

a. Latch Hooks: Equip doors 48 inches (1219 mm) and higher with three latch hooks and doors less than 48 inches (1219 mm) high with two latch hooks; fabricated from 0.120-inch (3.04-mm) nominal-thickness steel sheet; welded to full-height door strikes; with resilient silencer on each latch hook.

b. Latching Mechanism: Manufacturer's standard, rattle-free latching mechanism and moving components isolated to prevent metal-to-metal contact, and incorporating a prelocking device that allows locker door to be locked while door is open and then closed without unlocking or damaging lock or latching mechanism.

G. Identification Plates: Manufacturer's standard, etched, embossed, or stamped aluminum plates, with numbers and letters at least 3/8 inch (9 mm) high.

H. Hooks: Manufacturer's standard ball-pointed type, aluminum or steel; zinc plated.

I. Continuous Sloping Tops: Fabricated from 0.048-inch (1.21-mm) nominal-thickness steel sheet, with a pitch of approximately 20 degrees.

1. Closures: Vertical-end type.

J. Recess Trim: Fabricated from 0.048-inch (1.21-mm) nominal-thickness steel sheet.

K. Filler Panels: Fabricated from 0.048-inch (1.21-mm) nominal-thickness steel sheet.

L. Boxed End Panels: Fabricated from 0.048-inch (1.21-mm) nominal-thickness steel sheet.

M. Materials:

1. Cold-Rolled Steel Sheet: ASTM A 1008/A 1008M, Commercial Steel (CS), Type B, suitable for exposed applications.

N. Finish: Baked enamel or powder coat.

1. Color: As selected by Architect from manufacturer's full range.

2.4 FABRICATION

A. Fabricate metal lockers square, rigid, without warp, and with metal faces flat and free of dents or distortion. Make exposed metal edges safe to touch and free of sharp edges and burrs.

1. Form body panels, doors, shelves, and accessories from one-piece steel sheet unless otherwise indicated.
2. Provide fasteners, filler plates, supports, clips, and closures as required for complete installation.

B. Fabricate each metal locker with an individual door and frame; individual top, bottom, and back; and common intermediate uprights separating compartments. Factory weld frame members of each metal locker together to form a rigid, one-piece assembly.

C. Equipment: Provide each locker with an identification plate and the following equipment:

1. Single-Tier Units: Shelf, one double-prong ceiling hook, and two single-prong wall hooks.
2. Double-Tier Units: One double-prong ceiling hook and two single-prong wall hooks.
3. Triple-Tier Units: One double-prong ceiling hook.

D. Welded Construction: Factory preassemble metal lockers by welding all joints, seams, and connections; with no bolts, nuts, screws, or rivets used in assembly of main locker groups. Factory weld main locker groups into one-piece structures. Grind exposed welds flush.

E. Accessible Lockers: Fabricate as follows:

1. Locate bottom shelf no lower than 15 inches (381 mm) above the floor.
2. Where hooks, coat rods, or additional shelves are provided, locate no higher than 48 inches (1219 mm) above the floor.

F. Continuous Base: Formed into channel or zee profile for stiffness, and fabricated in lengths as long as practical to enclose base and base ends of metal lockers; finished to match lockers.

G. Continuous Sloping Tops: Fabricated in lengths as long as practical, without visible fasteners at splice locations; finished to match lockers.

1. Sloping-top corner fillers, mitered.

H. Recess Trim: Fabricated with minimum 2-1/2-inch (64-mm) face width and in lengths as long as practical; finished to match lockers.

I. Filler Panels: Fabricated in an unequal leg angle shape; finished to match lockers. Provide slip-joint filler angle formed to receive filler panel.

J. Boxed End Panels: Fabricated with 1-inch- (25-mm-) wide edge dimension, and designed for concealing fasteners and holes at exposed ends of nonrecessed metal lockers; finished to match lockers.

1. Provide one-piece panels for double-row (back-to-back) locker ends.

K. Finished End Panels: Designed for concealing unused penetrations and fasteners, except for perimeter fasteners, at exposed ends of nonrecessed metal lockers; finished to match lockers.

1. Provide one-piece panels for double-row (back-to-back) locker ends.

L. Center Dividers: Full-depth, vertical partitions between bottom and shelf; finished to match lockers.

2.5 ACCESSORIES

A. Fasteners: Zinc- or nickel-plated steel, slotless-type, exposed bolt heads; with self-locking nuts or lock washers for nuts on moving parts.

B. Anchors: Material, type, and size required for secure anchorage to each substrate.

1. Provide nonferrous-metal or hot-dip galvanized anchors and inserts on inside face of exterior walls, and elsewhere as indicated,] for corrosion resistance.
2. Provide toothed-steel or lead expansion sleeves for drilled-in-place anchors.

PART 3 - EXECUTION

3.1 EXAMINATION

A. Examine walls, floors, and support bases, with Installer present, for compliance with requirements for installation tolerances and other conditions affecting performance of the Work.

B. Prepare written report, endorsed by Installer, listing conditions detrimental to performance of the Work.

C. Proceed with installation only after unsatisfactory conditions have been corrected.

3.2 INSTALLATION

A. General: Install lockers level, plumb, and true; shim as required, using concealed shims.

1. Anchor locker runs at ends and at intervals recommended by manufacturer, but not more than 36 inches (910 mm) o.c. Using concealed fasteners, install anchors through backup reinforcing plates, channels, or blocking as required to prevent metal distortion.
2. Anchor single rows of metal lockers to walls near top of lockers and to floor.
3. Anchor back-to-back metal lockers to floor.

B. Welded Lockers: Connect groups together with standard fasteners, with no exposed fasteners on face frames.

C. Equipment:

1. Attach hooks with at least two fasteners.
2. Attach door locks on doors using security-type fasteners.
3. Identification Plates: Identify metal lockers with identification indicated on Drawings.

a. Attach plates to each locker door, near top, centered, with at least two aluminum rivets.
b. Attach plates to upper shelf of each open-front metal locker, centered, with a least two aluminum rivets.

D. Trim: Fit exposed connections of trim, fillers, and closures accurately together to form tight, hairline joints, with concealed fasteners and splice plates.

1. Attach recess trim to recessed metal lockers with concealed clips.
2. Attach filler panels with concealed fasteners. Locate filler panels where indicated on Drawings.
3. Attach sloping-top units to metal lockers, with closures at exposed ends.
4. Attach boxed end panels using concealed fasteners to conceal exposed ends of nonrecessed metal lockers.
5. Attach finished end panels using fasteners only at perimeter to conceal exposed ends of nonrecessed metal lockers.

3.3 ADJUSTING

A. Clean, lubricate, and adjust hardware. Adjust doors and latches to operate easily without binding.

3.4 PROTECTION

A. Protect metal lockers from damage, abuse, dust, dirt, stain, or paint. Do not permit use during construction.

B. Touch up marred finishes, or replace metal lockers that cannot be restored to factory-finished appearance. Use only materials and procedures recommended or furnished by locker manufacturer.

END OF SECTION 105113

SECTION 122113 - HORIZONTAL LOUVER BLINDS

PART 1 - GENERAL

1.1 RELATED DOCUMENTS

A. Drawings and general provisions of the Contract, including General and Supplementary Conditions and Division 01 Specification Sections, apply to this Section.

1.2 SUMMARY

A. This Section includes the following:

1. Horizontal louver blinds with aluminum slats on exterior glazed openings and selected interior glazed openings as shown below on section 2.1 “M”.

B. Related Sections include the following:

1. Division 06 Section "Miscellaneous Rough Carpentry" for wood blocking and grounds for mounting horizontal louver blinds and accessories.

1.3 SUBMITTALS

A. Product Data: For each type of product indicated.

B. Shop Drawings: Show fabrication and installation details for horizontal louver blinds.

C. Samples for Initial Selection: For each type and color of horizontal louver blind indicated.

1. Include similar Samples of accessories involving color selection.

D. Window Treatment Schedule: For horizontal louver blinds. Use same designations indicated on Drawings.

E. Maintenance Data: For horizontal louver blinds to include in maintenance manuals.

1.4 QUALITY ASSURANCE

A. Source Limitations: Obtain horizontal louver blinds through one source from a single manufacturer.

B. Fire-Test-Response Characteristics: Provide horizontal louver blinds with the fire-test-response characteristics indicated, as determined by testing identical products per test method indicated below by UL or another testing and inspecting agency acceptable to authorities having jurisdiction. Identify materials with appropriate markings of applicable testing and inspecting agency.

1. Flame-Resistance Ratings: Passes NFPA 701.

C. Product Standard: Provide horizontal louver blinds complying with WCSC A 100.1.

1.5 DELIVERY, STORAGE, AND HANDLING

A. Deliver horizontal louver blinds in factory packages, marked with manufacturer and product name, fire-test-response characteristics, lead-free designation, and location of installation using same designations indicated on Drawings and in a window treatment schedule.

1.6 PROJECT CONDITIONS

A. Environmental Limitations: Do not install horizontal louver blinds until construction and wet and dirty finish work in spaces, including painting, is complete and dry and ambient temperature and humidity conditions are maintained at the levels indicated for Project when occupied for its intended use.

B. Field Measurements: Where horizontal louver blinds are indicated to fit to other construction, verify dimensions of other construction by field measurements before fabrication and indicate measurements on Shop Drawings. Allow clearances for operable glazed units' operation hardware throughout the entire operating range. Notify Architect of discrepancies. Coordinate fabrication schedule with construction progress to avoid delaying the Work.

1.7 EXTRA MATERIALS

A. Furnish extra materials described below that match products installed and that are packaged with protective covering for storage and identified with labels describing contents.

1. Horizontal Louver Blinds: Before installation begins, for each size, color, texture, pattern, and gloss indicated, full-size units equal to 5 percent of amount installed.

PART 2 - PRODUCTS

2.1 HORIZONTAL LOUVER BLINDS, ALUMINUM SLATS

A. Manufacturers: Subject to compliance with requirements, available manufacturers offering products that may be incorporated into the Work include, but are not limited to, the following:

1. Hunter Douglas.
2. Levolor, a Newell Rubbermaid Company.
3. Springs Window Fashions Division, Inc.

B. Slats: Aluminum; alloy and temper recommended by producer for type of use and finish indicated; with crowned profile and radiused corners.

1. Width: 1 inch (25 mm).

a. Spacing: Not less than every 0.79 inch (20 mm).

2. Thickness: Manufacturer's standard.
3. Finish: One color.

a. Ionized Coating: Antistatic, dust-repellent, baked polyester finish.

C. Headrail: Formed steel or extruded aluminum; long edges returned or rolled; fully enclosing operating mechanisms on three sides and end plugs and the following:

1. Integrated Headrail/Valance: Curved face.
2. Light-blocking lower back lip.

D. Bottom Rail: Formed-steel or extruded-aluminum tube, with plastic or metal capped ends top contoured to match crowned shape of slat; with enclosed ladders and tapes to prevent contact with sill.

E. Maximum Light-Blocking Blinds: Designed for eliminating all visible light gaps if slats are tilted closed; with tight tape spacing indicated and slats with minimal-sized rout holes for ladders hidden and placed near back edge for maximum slat overlap; with headrail and bottom rail extended and formed for light-tight joints between rail and adjacent slats or construction.

1. Finish: Color texture, pattern, and gloss differing from slats as selected by Architect from manufacturer's full range.

F. Ladders: Evenly spaced to prevent long-term slat sag.

1. For Blinds with Nominal Slat Width 1 Inch (25 mm) or Less: Braided string.

G. Lift Cords: Manufacturer's standard.

H. Tilt Control: Enclosed worm-gear mechanism, slip clutch or detachable wand preventing overrotation, and linkage rod, and the following:

1. Tilt Operation: Manual with clear plastic wand.
2. Length of Tilt Control: Length required to make operation convenient from floor level.
3. Tilt: Full.

I. Lift Operation: Manual, cord lock; locks pull cord to stop blind at any position in ascending or descending travel.

J. Valance: Manufacturer's standard.

1. Finish Color Characteristics: Match color, texture, pattern, and gloss of slats.

K. Mounting: Wall mounting or end mounting, permitting easy removal and replacement without damaging blind or adjacent surfaces and finishes; with spacers and shims required for blind placement and alignment indicated.

1. Provide intermediate support brackets if end support spacing exceeds spacing recommended by manufacturer for weight and size of blind.

L. Colors, Textures, Patterns, and Gloss: As selected by Architect from manufacturer's full range.

M. Horizontal Louver Blind Locations:

1. Provide blinds at all exterior windows, including, but not limited to offices, conference rooms, conference rooms, and waiting areas. Clerestory windows and windows located in a main public space (i.e., corridors, hallways, etc.) shall not be furnished with blinds.

2. Provide blinds at all interior windows including, but not limited to, windows in private offices, conference rooms, workrooms, suites, general use meeting rooms. Windows located at storefront entrance, and administration storefront entrance windows shall not be furnished with blinds.

PART 3 - EXECUTION

3.1 HORIZONTAL LOUVER BLIND FABRICATION

A. Concealed Components: Noncorrodible or corrosion-resistant-coated materials.

1. Lift-and-Tilt Mechanisms: With permanently lubricated moving parts.

B. Unit Sizes: Obtain units fabricated in sizes to fill window and other openings as follows, measured at 74 deg F (23 deg C):

1. Blind Units Installed between (inside) Jambs: Width equal to 1/4 inch (6 mm) per side or 1/2 inch (13 mm) total, plus or minus 1/8 inch (3.1 mm), less than jamb-to-jamb dimension of opening in which each blind is installed. Length equal to 1/4 inch (6 mm), plus or minus 1/8 inch (3.1 mm), less than head-to-sill dimension of opening in which each blind is installed.
2. Blind Units Installed outside Jambs: Width and length as indicated, with terminations between blinds of end-to-end installations at centerlines of mullion or other defined vertical separations between openings.

C. Installation Brackets: Designed for easy removal and reinstallation of blind, for supporting headrail, valance, and operating hardware, and for hardware position and blind mounting method indicated.

D. Installation Fasteners: No fewer than two fasteners per bracket, fabricated from metal noncorrosive to blind hardware and adjoining construction; type designed for securing to supporting substrate; and supporting blinds and accessories under conditions of normal use.

E. Color-Coated Finish:

1. Metal: For components exposed to view, apply manufacturer's standard baked finish complying with manufacturer's written instructions for surface preparation including pretreatment, application, baking, and minimum dry film thickness.

F. Component Color: Provide rails, cords, ladders, and exposed-to-view metal and plastic matching or coordinating with slat color, unless otherwise indicated.

PART 4 - EXECUTION

4.1 EXAMINATION

A. Examine substrates, areas, and conditions, with Installer present, for compliance with requirements for installation tolerances, operational clearances, and other conditions affecting performance.

1. Proceed with installation only after unsatisfactory conditions have been corrected.

4.2 INSTALLATION

A. Install horizontal louver blinds level and plumb and aligned with adjacent units according to manufacturer's written instructions, and located so exterior slat edges in any position are not closer than 1 inch (25 mm) to interior face of glass. Install intermediate support as required to prevent deflection in headrail. Allow clearances between adjacent blinds and for operating glazed opening's operation hardware if any.

4.3 ADJUSTING

A. Adjust horizontal louver blinds to operate smoothly, easily, safely, and free of binding or malfunction throughout entire operational range.

4.4 CLEANING AND PROTECTION

A. Clean horizontal louver blind surfaces after installation, according to manufacturer's written instructions.

B. Provide final protection and maintain conditions, in a manner acceptable to manufacturer and installer, that ensure that horizontal louver blinds are without damage or deterioration at time of Substantial Completion.

C. Replace damaged horizontal louver blinds that cannot be repaired, in a manner approved by Architect, before time of Substantial Completion.

END OF SECTION 122113

SECTION 21 05 00 - COMMON WORK RESULTS FOR FIRE SUPPRESSION

PART 1 GENERAL

1.1 SUMMARY

A. Section includes pipe, fittings, valves, and connections for sprinkler systems, firestopping relating to fire suppression work, and firestop accessories.

B. Related Sections:
1. Division 03 - Concrete Forming and Accessories: Execution requirements for inserts and sleeves specified by this section.
2. Division 07 - Firestopping: Product requirements for firestopping for placement by this section.
3. Division 09 - Painting and Coating: Execution requirements for piping painting specified by this section.

1.2 REFERENCES

A. American Society of Mechanical Engineers:
1. ASME B16.1 - Cast Iron Pipe Flanges and Flanged Fittings.
2. ASME B16.11 - Forged Steel Fittings - Socket-Welding and Threaded.
3. ASME B16.18 - Cast Copper Alloy Solder Joint Pressure Fittings.
4. ASME B16.22 - Wrought Copper and Copper Alloy Solder Joint Pressure Fittings.
5. ASME B16.25 - Buttwelding Ends.
6. ASME B16.3 - Malleable Iron Threaded Fittings.
7. ASME B16.4 - Gray Iron Threaded Fittings.
8. ASME B16.5 - Pipe Flanges and Flanged Fittings.
9. ASME B16.9 - Factory-Made Wrought Steel Buttwelding Fittings.
10. ASME B36.10M - Welded and Seamless Wrought Steel Pipe.

B. ASTM International:
1. ASTM A53/A53M - Standard Specification for Pipe, Steel, Black and Hot-Dipped, Zinc-Coated, Welded and Seamless.
2. ASTM A135 - Standard Specification for Electric-Resistance-Welded Steel Pipe.
3. ASTM A234/A234M - Standard Specification for Piping Fittings of Wrought Carbon Steel and Alloy Steel for Moderate and High Temperature Service.
4. ASTM A795/A795M - Standard Specification for Black and Hot-Dipped Zinc-Coated (Galvanized) Welded and Seamless Steel Pipe for Fire Protection Use.
5. ASTM B32 - Standard Specification for Solder Metal.
6. ASTM B75 - Standard Specification for Seamless Copper Tube.
7. ASTM B88 - Standard Specification for Seamless Copper Water Tube.
8. ASTM B251 - Standard Specification for General Requirements for Wrought Seamless Copper and Copper-Alloy Tube.
9. ASTM D3309 - Standard Specification for Polybutylene (PB) Plastic Hot- and Cold-Water Distribution Systems.
10. ASTM F438 - Standard Specification for Socket-Type Chlorinated Poly (Vinyl Chloride) (CPVC) Plastic Pipe Fittings, Schedule 40.
11. ASTM F439 - Standard Specification for Socket-Type Chlorinated Poly (Vinyl Chloride) (CPVC) Plastic Pipe Fittings, Schedule 80.

12. ASTM F442/F442M - Standard Specification for Chlorinated Poly (Vinyl Chloride) (CPVC) Plastic Pipe (SDR-PR).
13. ASTM F493 - Standard Specification for Solvent Cements for Chlorinated Poly (Vinyl Chloride) (CPVC) Plastic Pipe and Fittings.

C. American Welding Society:
1. AWS A5.8 - Specification for Filler Metals for Brazing and Braze Welding.
2. AWS D1.1 - Structural Welding Code - Steel.

D. American Water Works Association:
1. AWWA C110 - American National Standard for Ductile-Iron and Grey-Iron Fittings, 3 in. through 48 in. (75 mm through 1200 mm), for Water and Other Liquids.
2. AWWA C111 - American National Standard for Rubber-Gasket Joints for Ductile-Iron Pressure Pipe and Fittings.
3. AWWA C151 - American National Standard for Ductile-Iron Pipe, Centrifugally Cast, for Water.

E. National Fire Protection Association:
1. NFPA 13 - Installation of Sprinkler Systems.
2. NFPA 14 - Standard for the Installation of Standpipe, Private Hydrants and Hose Systems.
3. NFPA 24 - Installation of Private Fire Service Mains and Their Appurtenances.

F. Underwriter Laboratories, Inc.:
1. UL 1887 - Fire Tests of Plastic Sprinkler Pipe for Visible Flame and Smoke Characteristics.

1.3 DEFINITIONS

A. Firestopping (Through-Penetration Protection System): Sealing or stuffing material or assembly placed in spaces between and penetrations through building materials to arrest movement of fire, smoke, heat, and hot gases through fire rated construction.

1.4 SYSTEM DESCRIPTION

A. Firestopping Materials: Comply with requirements of Division 07.

B. Firestop interruptions to fire rated assemblies, materials, and components.

1.5 PERFORMANCE REQUIREMENTS

A. Firestopping Materials: Comply with requirements of Section 07 84 00.

1.6 SUBMITTALS

A. Division 01 - Submittal Procedures: Submittal procedures.

B. Shop Drawings: Indicate pipe materials used, jointing methods, supports, floor and wall penetration seals. Indicate installation, layout, weights, mounting and support details, and piping connections.

C. Product Data:
   1. Submit manufacturers catalogue information. Indicate valve data and ratings.
   2. Firestopping: Submit data on product characteristics, performance and limitation criteria.

D. Firestopping Schedule: Submit schedule of opening locations and sizes, penetrating items, and required listed design numbers to seal openings to maintain fire resistance rating of adjacent assembly.

E. Manufacturer's Installation Instructions:
   1. Firestopping: Submit preparation and installation instructions.

F. Manufacturer's Certificate: Certify products meet or exceed specified requirements.

G. Firestopping Engineering Judgments: For conditions not covered by UL or WH listed designs, submit judgments by licensed professional engineer suitable for presentation to authority having jurisdiction for acceptance as meeting code fire protection requirements.

1.7 CLOSEOUT SUBMITTALS

A. Division 01 - Execution and Closeout Requirements: Closeout procedures.

B. Project Record Documents: Record actual locations of components and tag numbering.

C. Operation and Maintenance Data: Submit spare parts lists.

1.8 QUALITY ASSURANCE

A. Through Penetration Firestopping of Fire Rated Assemblies: [UL 1479 or] ASTM E814 with 0.10 inch water gage minimum positive pressure differential to achieve fire F-Ratings and temperature T-Ratings as indicated on Drawings, but not less than 1-hour.
   1. Wall Penetrations: Fire F-Ratings as indicated on Drawings, but not less than 1-hour.
   2. Floor and Roof Penetrations: Fire F-Ratings and temperature T-Ratings as indicated on Drawings, but not less than 1-hour.
      a. Floor Penetrations Within Wall Cavities: T-Rating is not required.

B. Through Penetration Firestopping of Non-Fire Rated Floor and Roof Assemblies: Materials to resist free passage of flame and products of combustion.
   1. Noncombustible Penetrating Items: Noncombustible materials for penetrating items connecting maximum of three stories.
   2. Penetrating Items: Materials approved by authorities having jurisdiction for penetrating items connecting maximum of two stories.

C. Fire Resistant Joints in Fire Rated Floor, Roof, and Wall Assemblies: ASTM E1966 or UL 2079 to achieve fire resistant rating as indicated on Drawings for assembly in which joint is installed.

D. Fire Resistant Joints Between Floor Slabs and Exterior Walls: ASTM E119 with 0.10 inch water gage minimum positive pressure differential to achieve fire resistant rating as indicated on Drawings for floor assembly.

E. Surface Burning Characteristics: Maximum 25/450 flame spread/smoke developed index when tested in accordance with ASTM E84.

F. Perform Work in accordance with NFPA 13 and International Fire Code 2009 Edition.

1.9 QUALIFICATIONS

A. Manufacturer: Company specializing in manufacturing products specified in this section with minimum three years documented experience.

B. Installer: Company specializing in performing Work of this section with minimum five years documented experience and approved by manufacturer.

1.10 PRE-INSTALLATION MEETINGS

A. Division 01 - Administrative Requirements: Pre-installation meeting.

B. Convene minimum one week prior to commencing work of this section.

1.11 DELIVERY, STORAGE, AND HANDLING

A. Division 01 - Product Requirements: Product storage and handling requirements.

B. Deliver and store valves in shipping containers, with labeling in place.

C. Furnish cast iron and steel valves with temporary protective coating.

D. Furnish temporary end caps and closures on piping and fittings. Maintain in place until installation.

1.12 ENVIRONMENTAL REQUIREMENTS

A. Division 01 - Product Requirements: Environmental conditions affecting products on site.

B. Do not apply firestopping materials when temperature of substrate material and ambient air is below 60 degrees F.

C. Maintain this minimum temperature before, during, and for minimum 3 days after installation of firestopping materials.

D. Provide ventilation in areas to receive solvent cured materials.

1.13 WARRANTY

A. Division 01 - Execution and Closeout Requirements: Product warranties and product bonds.

B. Furnish five year manufacturer warranty for basic fire suppression materials and methods.

1.14 EXTRA MATERIALS

A. Division 01 - Execution and Closeout Requirements: Spare parts and maintenance products.

B. Furnish two sets of valve stem packing for each size and type of valve installed.

PART 2 PRODUCTS

2.1 VALVES

A. Furnish materials in accordance with 2009 International Fire Code.

B. Gate Valves:
1. Up to and including 2 inches: Bronze body and trim, rising stem, hand wheel, solid wedge or disc, threaded ends.
2. Over 2 inches: Iron body, bronze trim, rising stem pre-grooved for mounting tamper switch, hand wheel, OS&Y, solid bronze or cast iron wedge, flanged ends.
3. Over 4 inches: Iron body, bronze trim, non-rising stem with bolted bonnet, solid bronze wedge, flanged ends, iron body indicator post assembly.

C. Globe or Angle Valves:
1. Up to and including 2 inches: Bronze body, bronze trim, rising stem and hand wheel, inside screw, renewable rubber disc, threaded ends, with back seating capacity packable under pressure.
2. Over 2 inches: Iron body, bronze trim, rising stem, hand wheel, OS&Y, plug-type disc, flanged ends, renewable seat and disc.

D. Ball Valves:
1. Up to and including 2 inches: Bronze two piece body, brass, chrome plated bronze, or stainless steel ball, teflon seats and stuffing box ring, lever handle, threaded ends with union.
2. Over 2 inches: Manufacturers: Cast steel body, chrome plated steel ball, teflon seat and stuffing box seals, lever handle or gear drive hand wheel for sizes 10 inches and over, flanged.

E. Butterfly Valves:
1. Bronze Body: Stainless steel disc, resilient replaceable seat, threaded or grooved ends, extended neck, hand wheel and gear drive and integral indicating device.
2. Cast or Ductile Iron Body: Cast or ductile iron, chrome or nickel plated ductile iron or aluminum bronze disc, resilient replaceable EPDM seat, wafer, lug, or grooved ends. With extended neck, hand wheel and gear drive and integral indicating device.

F. Check Valves:
1. Up to and including 2 inches: Bronze body and swing disc, rubber seat, threaded ends.
2. Over 2 inches: Iron body, bronze trim, swing check with rubber disc, renewable disc and seat, flanged ends.
3. 4 inches and Over: Iron body, bronze disc with stainless steel spring, resilient seal, threaded, wafer, or flanged ends.

G. Drain Valves:
1. Compression Stop: Bronze with hose thread nipple and cap.
2. Ball Valve: Brass with cap and chain, 3/4 inch hose thread.

2.2 ABOVE GROUND PIPING

A. Steel Pipe: ASTM A53/A53M, Grade B; ASTM A135/135M; ASTM A135/135M UL listed, threadable, light wall; ASTM A795/A795M; or ASME B36.10; Schedule 40 black.
   1. Steel Fittings: ASME B16.9, wrought steel, butt welded; ASME B16.25, butt weld ends; ASTM A234/A234M, wrought carbon steel and alloy steel; ASME B16.5, steel flanges and fittings; ASME B16.11, forged steel socket welded and threaded.
   2. Cast Iron Fittings: ASME B16.1, flanges and flanged fittings; ASME B16.4, threaded fittings.
   3. Malleable Iron Fittings: ASME B16.3, threaded fittings; ASTM B47, Mechanical Grooved Couplings: Malleable iron housing clamps to engage and lock, "C" shaped elastomeric sealing gasket, steel bolts, nuts, and washers; galvanized for galvanized pipe.
   4. Mechanical Formed Fittings: Carbon-steel housing with integral pipe stop and O-ring pocked and O-ring uniformly compressed into permanent mechanical engagement onto pipe.

2.3 PIPE HANGERS AND SUPPORTS

A. Conform to NFPA 13 and 2009 International Fire Code.

B. Hangers for Pipe Sizes 1/2 to 1-1/2 inch: Carbon steel, adjustable swivel, split ring.

C. Hangers for Pipe Sizes 2 inch and Over: Carbon steel, adjustable, clevis.

D. Multiple or Trapeze Hangers: Steel channels with welded spacers and hanger rods.

E. Wall Support for Pipe Sizes to 3 inches: Cast iron hook.

F. Wall Support for Pipe Sizes 4 inches and Over: Welded steel bracket and wrought steel clamp.

G. Vertical Support: Steel riser clamp.

H. Floor Support: Cast iron adjustable pipe saddle, lock nut, nipple, floor flange, and concrete pier or steel support.

PART 3 EXECUTION

3.1 EXAMINATION

A. Division 01 - Administrative Requirements: Verification of existing conditions before starting work.

B. Verify openings are ready to receive sleeves.

C. Verify openings are ready to receive firestopping.

3.2 PREPARATION

A. Ream pipe and tube ends. Remove burrs. Bevel plain end ferrous pipe.

B. Remove scale and foreign material, from inside and outside, before assembly.

C. Prepare piping connections to equipment with flanges or unions.

D. Obtain permission from Architect/Engineer before using powder-actuated anchors.

E. Do not drill or cut structural members.

F. Clean substrate surfaces of dirt, dust, grease, oil, loose material, or other matter affecting bond of firestopping material.

G. Remove incompatible materials affecting bond.

H. Install backing/damming materials to arrest liquid material leakage.

3.3 INSTALLATION

A. Install piping in accordance with International Fire Code 2009 Edition, NFPA 13 for sprinkler systems, and NFPA 24 for service mains.

B. Route piping in orderly manner, plumb and parallel to building structure. Maintain gradient.

C. Install piping to conserve building space, to not interfere with use of space and other work.

D. Group piping whenever practical at common elevations.

E. Install pipe sleeve at piping penetrations through footings, partitions, walls, and floors. Seal pipe and sleeve penetrations to maintain fire resistance equivalent to fire separation.

F. Install piping to allow for expansion and contraction without stressing pipe, joints, or connected equipment.

G. Pipe Hangers and Supports:
   1. Install in accordance with NFPA 13.
   2. Install hangers to with minimum 1/2 inch space between finished covering and adjacent work.
   3. Place hangers within 12 inches of each horizontal elbow.
   4. Use hangers with 1-1/2 inch minimum vertical adjustment. Design hangers for pipe movement without disengagement of supported pipe.
   5. Support vertical piping at every floor. Support riser piping independently of connected horizontal piping.
   6. Where installing several pipes in parallel and at same elevation, provide multiple or trapeze hangers.
   7. Prime coat exposed steel hangers and supports. Refer to Division 09. Hangers and supports located in crawl spaces, pipe shafts, and suspended ceiling spaces are not considered exposed.

H. Slope piping and arrange systems to drain at low points. Install eccentric reducers to maintain top of pipe level.

I. Prepare pipe, fittings, supports, and accessories for finish painting. Where pipe support members are welded to structural building framing, scrape, brush clean, and apply one coat of zinc rich primer to welding. Refer to Division 09.

J. Do not penetrate building structural members unless indicated.

K. Where more than one piping system material is specified, install compatible system components and joints. Install flanges, union, and couplings at locations requiring servicing.

L. Die cut threaded joints with full cut standard taper pipe threads with red lead and linseed oil or other non-toxic joint compound applied to male threads only.

M. Install valves with stems upright or horizontal, not inverted. Remove protective coatings after installation.

N. Install gate, ball or butterfly valves for shut-off or isolating service.

O. Install drain valves at main shut-off valves, low points of piping and apparatus.

3.4 INSTALLATION - FIRESTOPPING

A. Firestopping Materials: Comply with requirements of Section 07 84 00.

3.5 FIELD QUALITY CONTROL

A. Division 01 - Quality Requirements: Requirements for inspecting, testing.

B. Inspect installed firestopping for compliance with specifications and submitted schedule.

3.6 CLEANING

A. Division 01 - Execution and Closeout Requirements: Final cleaning.

B. Clean entire system after other construction is complete.

C. Clean adjacent surfaces of firestopping materials.

END OF SECTION

SECTION 21 05 16 - EXPANSION FITTINGS AND LOOPS FOR FIRE-SUPPRESSION PIPING

PART 1 GENERAL

1.1 SUMMARY

A. Section Includes:
1. Flexible pipe connectors.
2. Expansion joints.
3. Expansion compensators.
4. Pipe alignment guides.
5. Swivel joints.
6. Pipe anchors.

B. Related Sections:
1. Section 21 05 00 - Common Work Results for Fire Suppression: Product and installation requirements for piping used in fire protection systems.

1.2 REFERENCES

A. American Society of Mechanical Engineers:
1. ASME B31.9 - Building Services Piping.
2. ASME Section IX - Boiler and Pressure Vessel Code - Welding and Brazing Qualifications.

B. American Welding Society:
1. AWS D1.1 - Structural Welding Code - Steel.

1.3 DESIGN REQUIREMENTS

A. Provide structural work and equipment required for expansion and contraction of piping. Verify anchors, guides, and expansion joints provide and adequately protect system.

B. Expansion Compensation Design Criteria:
1. Installation Temperature: 40 degrees F.
2. Fire Protection System Temperature: 95 degrees F.
3. Safety Factor: 30 percent.

1.4 SUBMITTALS

A. Division 01 - Submittal Procedures: Requirements for submittals.

B. Shop Drawings: Indicate layout of piping systems, including flexible connectors, expansion joints, expansion compensators, loops, offsets and swing joints.

C. Product Data:
1. Flexible Pipe Connectors: Indicate maximum temperature and pressure rating, face-to-face length, live length, hose wall thickness, hose convolutions per foot and per assembly, fundamental frequency of assembly, braid structure, and total number of wires in braid.

2. Expansion Joints: Indicate maximum temperature and pressure rating, and maximum expansion compensation.

D. Design Data: Indicate criteria and show calculations.

E. Manufacturer's Installation Instructions: Submit special procedures.

F. Manufacturer's Certificate: Certify products meet or exceed specified requirements.

G. Welders' Certificate: Include welders' certification of compliance with ASME Section IX.

H. Manufacturer's Field Reports: Indicate results of inspection by manufacturer's representative.

1.5 CLOSEOUT SUBMITTALS

A. Division 01 - Execution and Closeout Requirements: Closeout procedures.

B. Project Record Documents: Record actual locations of flexible pipe connectors, expansion joints, anchors, and guides.

C. Operation and Maintenance Data: Submit adjustment instructions.

1.6 QUALITY ASSURANCE

A. Perform Work in accordance with ASME B31.9 code for installation of piping systems and ASME Section IX for welding materials and procedures.

1.7 QUALIFICATIONS

A. Manufacturer: Company specializing in manufacturing products specified in this section with minimum three years documented experience.

B. Installer: Company specializing in performing Work of this section with minimum five years documented experience and approved by manufacturer.

1.8 PRE-INSTALLATION MEETINGS

A. Division 01 - Administrative Requirements: Pre-installation meeting.

B. Convene minimum one week prior to commencing work of this section.

1.9 DELIVERY, STORAGE, AND HANDLING

A. Division 01 - Product Requirements: Product storage and handling requirements.

B. Accept expansion joints on site in factory packing with shipping bars and positioning devices intact. Inspect for damage.

C. Protect equipment from exposure by leaving factory coverings, pipe end protection, and packaging in place until installation.

1.10 WARRANTY

A. Division 01 - Execution and Closeout Requirements: Product warranties and product bonds.

B. Furnish five year manufacturer warranty for leak free performance of packed expansion joints.

1.11 EXTRA MATERIALS

A. Division 01 - Execution and Closeout Requirements: Spare parts and maintenance products.

PART 2 PRODUCTS

2.1 FLEXIBLE PIPE CONNECTORS

A. Steel Piping:
1. Inner Hose: Stainless Steel.
2. Exterior Sleeve: Double braided stainless steel.
3. Pressure Rating: 200 psig WOG and 250 degrees F.
4. Joint: As specified in Section 21 05 00.
5. Size: Use pipe-sized units.
6. Maximum offset: 3/4 inch on each side of installed center line.

2.2 EXPANSION JOINTS

A. Stainless Steel Bellows Type:
1. Pressure Rating: 200 psig WOG and 250 degrees F.
2. Maximum Compression: 1-3/4 inch.
3. Maximum Extension: 1/4 inch.
4. Joint: As specified in Section 21 05 00.
5. Size: Use pipe sized units.
6. Application: Steel piping 3 inch and smaller.

B. External Ring Controlled Stainless Steel Bellows Type:
1. Pressure Rating: 200 psig WOG and 250 degrees F.
2. Maximum Compression: 1-1/4 inch.
3. Maximum Extension: 3/8 inch.
4. Maximum Offset: 5/16 inch.
5. Joint: Flanged
6. Size: Use pipe sized units.
7. Accessories: Internal flow liner.
8. Application: Steel piping 3 inch and larger.

C. Low Pressure Compensators with two-ply Bronze Bellows:
1. Working Pressure: 80 psig.
2. Maximum Temperatures: 250 degrees F.
3. Maximum Compression: 1/2 inch.
4. Maximum Extension: 5/32 inch.
5. Joint: Soldered.
6. Size: Use pipe sized units
7. Application: Copper or steel piping 2 inch and smaller.

2.3 ACCESSORIES

A. Pipe Alignment Guides: Two piece welded steel with enamel paint, bolted, with spider to fit standard pipe, frame with four mounting holes, clearance for minimum 1 inch thick insulation, minimum 3 inch travel.

B. Swivel Joints: Fabricated steel body, double ball bearing race, field lubricated, with rubber Buna-N) O-ring seals.

PART 3 EXECUTION

3.1 INSTALLATION

A. Install Work in accordance with ASME B31.9.

B. Install flexible pipe connectors on pipes connected to equipment supported by vibration isolation. Refer to Section 21 05 48. Provide line size flexible connectors.

C. Install flexible connectors at right angles to displacement. Install one end immediately adjacent to isolated equipment and anchor other end. Install in horizontal plane unless indicated otherwise.

D. Rigidly anchor pipe to building structure. Provide pipe guides to direct movement only along axis of pipe. Erect piping so strain and weight is not on cast connections or apparatus.

E. Provide support and anchors for controlling expansion and contraction of piping. Provide loops, pipe offsets, and swing joints, or expansion joints where required. Refer to Section 21 05 00 for pipe hanger installation requirements.

F. Provide grooved piping systems with minimum one joint per inch pipe diameter instead of flexible connector supported by vibration isolation. Grooved piping systems need not be anchored.

G. Provide expansion loops as required.

3.2 MANUFACTURER'S FIELD SERVICES

A. Division 01 - Quality Requirements: Manufacturers’ field services.

B. Furnish inspection services by flexible pipe manufacturer's representative for final installation and certify installation is in accordance with manufacturer's recommendations and connectors are performing satisfactorily.

END OF SECTION

SECTION 21 13 13 - WET-PIPE SPRINKLER SYSTEMS

PART 1 GENERAL

1.1 SUMMARY

A. Section includes wet-pipe sprinkler system, system design, installation, and certification.

B. Related Sections:
   1. Section 26 05 03 - Equipment Wiring Connections: Execution requirements for electric connections to equipment specified by this section.

1.2 REFERENCES

A. National Fire Protection Association:
   1. NFPA 13 - Installation of Sprinkler Systems.

B. International Fire Code 2009 Edition as adopted by the City of El Paso, Texas.

1.3 SYSTEM DESCRIPTION

A. Extend coverage from existing building to new additions; modify existing system in areas to be renovated to provide coverage for such areas.

B. Provide hydraulically designed system to NFPA 13 light hazard occupancy requirements.

C. Determine volume and pressure of incoming water supply from water flow test data.

D. Interface system with building fire and smoke alarm system.

1.4 SUBMITTALS

A. Division 01 - Submittal Procedures: Submittal procedures.

B. Shop Drawings: Indicate layout of finished ceiling areas indicating sprinkler locations coordinated with ceiling installation. Indicate detailed pipe layout, hangers and supports, sprinklers, components and accessories. Indicate system controls.

C. Product Data: Submit data on sprinklers, valves, and specialties, including manufacturers catalog information. Submit performance ratings, rough-in details, weights, support requirements, and piping connections.

D. Design Data: Submit design calculations.

E. Manufacturer's Certificate: Certify products meet or exceed specified requirements.

1.5 CLOSEOUT SUBMITTALS

A. Division 01 - Execution and Closeout Requirements: Closeout procedures.

B. Project Record Documents: Record actual locations of sprinklers and deviations of piping from drawings. Indicate drain and test locations.

C. Operation and Maintenance Data: Submit components of system, servicing requirements, record drawings, inspection data, replacement part numbers and availability, and location and numbers of service depot.

1.6 QUALITY ASSURANCE

A. Perform Work in accordance with NFPA 13, International Fire Code 2009 Edition and Requirements of The City of El Paso, Texas.

1.7 QUALIFICATIONS

A. Manufacturer: Company specializing in manufacturing products specified in this section with minimum three years documented experience.

B. Installer: Company specializing in performing Work of this section with minimum five years documented experience.

1.8 PRE-INSTALLATION MEETINGS

A. Division 01 - Administrative Requirements: Pre-installation meeting.

B. Convene minimum one week prior to commencing work of this section.

1.9 DELIVERY, STORAGE, AND HANDLING

A. Division 01 - Product Requirements: Product storage and handling requirements.

B. Store products in shipping containers until installation.

C. Furnish piping with temporary inlet and outlet caps until installation.

1.10 WARRANTY

A. Division 01 - Execution and Closeout Requirements: Product warranties and product bonds.

B. Furnish five year manufacturer warranty for all materials used.

1.11 EXTRA MATERIALS

A. Division 01 - Execution and Closeout Requirements: Spare parts and maintenance products.

B. Furnish extra sprinklers under provisions of NFPA 13.

C. Furnish suitable wrenches for each sprinkler type.

D. Furnish metal storage cabinet located adjacent to alarm valve.

PART 2 PRODUCTS

2.1 SPRINKLERS

A. Manufacturers:
1. Ansul Incorporated.
2. Automatic Sprinkler Corp.
3. Kike Protection Systems.
4. Grinnell Corp.
5. Reliable Sprinkler Corp.
6. WSA Inc.

B. Suspended Ceiling Type:
1. Type: Standard pendant type with matching screw on escutcheon plate.
2. Finish: Chrome plated.
3. Escutcheon Plate Finish: Chrome plated.
4. Fusible Link: Glass bulb type temperature rated for specific area hazard.

C. Exposed Area Type:
1. Type: Standard upright type with guard.
2. Finish: Brass.
3. Fusible Link: Fusible-solder link type temperature rated for specific area hazard.

D. Side wall Type:
1. Type: Standard horizontal side wall type with matching screw on escutcheon plate.
2. Finish: Chrome plated.
3. Escutcheon Plate Finish: Chrome plated.
4. Fusible Link: Glass bulb type temperature rated for specific area hazard.

E. Guards: Finish to match sprinkler finish.

2.2 ELECTRICAL CHARACTERISTICS AND COMPONENTS

A. Controls: Supervisory switches, Water Level Supervisory Switches, Tank Temperature Supervisory Switches, Room Temperature Supervisory Switches.

PART 3 EXECUTION

3.1 INSTALLATION

A. Install in accordance with NFPA 13 and International Fire Code 2009 Edition as adopted by the City of El Paso, Texas.

B. Install buried shut-off valves in valve box. Furnish post indicator.

C. Place pipe runs to minimize obstruction to other work.

D. Install piping in concealed spaces above finished ceilings.

E. Center sprinklers in two directions in ceiling tile and install flexible piping offsets.

F. Install guards on sprinklers where required or if sprinklers are subject to damage due to operations.

G. Hydrostatically test sections of existing modified by new arrangement and new building additions.

H. Require test be witnessed by Fire Marshall, and Owner's insurance underwriter (as applicable).

3.2 INTERFACE WITH OTHER PRODUCTS

A. Verify signal devices are installed and connected to fire alarm system.

3.3 CLEANING

A. Division 01 - Execution and Closeout Requirements: Final cleaning.

B. Flush entire piping system of foreign matter.

3.4 PROTECTION OF INSTALLED CONSTRUCTION

A. Division 01 - Execution and Closeout Requirements: Protecting installed construction.

B. Apply masking tape or paper cover to protect concealed sprinklers, cover plates, and sprinkler escutcheons not receiving field paint finish. Remove after painting. Replace painted sprinklers with new.

3.5 SCHEDULES

A. System Hazard Areas:

Location	System Type/Hazard
Offices and Inspection Areas	Light Hazard

END OF SECTION

SECTION 22 05 00 - COMMON WORK REQUIREMENTS FOR PLUMBING

PART 1 - GENERAL

1.1 SCOPE OF WORK

A. See General Conditions and Supplementary Conditions.

B. The requirements listed under General Conditions and Supplementary Conditions and the General Requirements are applicable to this section and all subsequent Sections of Division 22 and form a part of the contract.

C. Division 26 for Electrical Systems.

D. All electrical work, regardless of voltage which is provided under Division 22 shall comply with the requirements of the National Electric Code (NEC) and Division 26.

1.2 CODES AND PERMITS

A. The plumbing work shall be performed in strict accordance with the applicable provisions of the International Building Code; the Uniform Plumbing Code, and the International Fire Code, and the National Fire Protection Association (NFPA Regulations), as currently adopted by the City of El Paso, regarding plumbing systems and electrical systems. All materials and labor necessary to comply with rules, regulations and ordinances shall be provided. Where the drawings and/or specifications indicate materials or construction in excess of code requirements, the drawings and/or specifications shall govern. The Contractor shall hold and save the Architect and Engineer free and harmless from liability of any nature or kind arising from his failure to comply with codes and ordinances.

B. Permits necessary for performance of the work shall be secured and paid for by the Contractor. All utility connections, extensions, meter pits and meter sets and tap fees for water shall be paid for by the Contractor, unless otherwise specified herein.

C. The following lists some applicable codes and standards that shall be followed:
   Applicable City, county, and state mechanical, electrical, gas, plumbing, health and sanitary codes, laws and ordinances
   National Electrical Manufacturer's Association Standards
   National Electrical Code
   Underwriters Laboratories, Inc. Standards
   American National Standards Institute
   American Society for Testing Materials Standards
   Standards and requirements of local utility companies.
   National Fire Protection Association Standards
   American Society of Mechanical Engineers Boiler and Pressure Vessel Codes
   Occupational Safety and Health Act
   Commercial and Industrial Insulation Standards (MICA)
   American Gas Association

The American Society of Sanitary Engineering

1.3 RECORD DRAWINGS

A. See Division 1, for requirements associated with Project Record Drawings.

B. The Contractor shall be responsible to maintain a complete and accurate set of marked up reproducible sepias showing information on the installed location and arrangement of all plumbing work, and in particular, where changes were made during construction. The Contractor shall be responsible for keeping record drawings accurate and up-to-date throughout the construction period. Record drawings may be reviewed and checked by the Architect during the construction and in conjunction with review and approval of monthly pay requests. Contractor shall include copies of all addenda, RFl's, bulletins, and change orders neatly taped or attached to record drawing set.

C. After installation and acceptance of direct buried underground piping and service lines in trenches, the Contractor shall take 'as-built' measurements, including all depths, prior to commencement of backfilling operations. It will not be sufficient to check off line locations. Definite measurements shall be taken for each service line. The location of buried piping and trench service lines shall be shown on the drawings and dimensioned from fixed points.

1.4 QUALIFICATIONS

A. All mechanics shall be skilled in their respective trade.

B. All welders shall be certified in accordance with the ASME Boiler Test Code, Section IX, latest issue.

1.5 QUALIFICATION PROCEDURES

A. The storage, handling, and transportation of all refrigerants, oils, lubricants, etc. shall be Accomplished in strict compliance with all State, local, and Federal Regulations including all requirements set forth by the Environmental Protection Agency (EPA) for the safe handling of regulated refrigerants and materials. The Contractor shall utilize qualified and/or certified personnel and equipment as prescribed by these requirements. In no situation shall any refrigerant be discharged to the atmosphere.

1.6 HAZARDOUS CONDITIONS

A. Protruding metal (bolts, steel angles, etc.) potentially hazardous to maintenance and operation personnel, shall be cut back and/or protected to reduce the risk of injury.

1.7 HAZARD SIGNS

A. Equipment rooms, fan plenums, and similar areas containing moving or rotating parts, or other potentially hazardous environments shall include signs on all doors entering such spaces that shall read similar to the following: "Hazardous Area - Authorized Personnel Only."

B. Confined Spaces: Areas designated by OSHA Standard 1910.146 as a confined space shall be marked with a sign that reads "Confined Space - Entry by authorized personnel only, by permit."

1. "Confined Space" means a space that:

a. Is large enough and so configured that an employee can bodily enter and perform assigned work; and
b. Has limited or restricted means for entry or exit (for example, tanks, vessels, storage bins, hoppers, vaults, and pits are spaces that may have limited means of entry); and
c. Is not designed for continuous employee occupancy.

C. The Contractor shall survey the final premises to determine where any such potentially hazardous areas exist. If the Contractor feels that hazards exist which cannot be suitably provided for through the above typical methods, he shall forward in writing his concerns, and request for a decision concerning the referenced hazard, prior to the final inspection of the facilities.

1.8 SUBMITTALS

A. The Contractor shall submit submittal brochures of all equipment, fixtures and materials to be furnished under Division 22, including but not limited to the following:
1. Piping materials, valves, insulation materials and installation methods, vibration isolation devices, pipe penetration installation methods and products for fire rated assemblies, and all plumbing equipment listed on equipment schedules, and in related construction documents.
2. Materials, certification, shop drawings, and other information as specified in the individual Division 22 Specification Sections within this Specification.

B. Unauthorized Substitutions: If substitute materials, equipment or systems are installed without prior review or are installed in a manner which is not in conformance with the requirement of this Specification and for which the Contractor has not received a written review, removal of all the unauthorized materials and installation of those indicated or specified shall be provided at no change in contract amount.

C. All equipment shall be installed in accordance with the manufacturer's recommendations. Provide all accessories and components for optimum operation as recommended by the manufacturer.

D. Expense: All costs for the preparation, correction, delivery, and return of the submittals shall be borne by the Contractor.

E. Submittals and one re-submittal will be reviewed by the Architect/Engineer. If the Contractor fails to provide the required data with his second submittal, he will be charged for the third and subsequent reviews.

F. See Division I for additional submission requirements.

G. The Contractor shall submit a maximum of seven (7) copies of submittal brochures for review. Brochures shall be submitted within thirty (30) days after contract award. One (I) copy of all submittals will be retained by the Engineer. The remaining copies will be returned to the Architect. Additional sets of submittals, if required by the Contractor, shall be reproduced by the Contractor from the reviewed and marked sets returned to the Contractor.

H. Complete data must be furnished showing performance, quality and dimensions. No equipment or materials shall be purchased prior to receiving written notification that

submittals have been reviewed and marked either "NO EXCEPTIONS TAKEN" or "EXCEPTIONS AS NOTED." Submittals returned marked "EXCEPTIONS AS NOTED" do not require re-submittal provided that the Contractor agrees to comply with all exceptions noted in the submittal, and so states in a letter.

I. Review of Submittals: Submittals will be reviewed with reasonable promptness, but only for conformance with the design concept of the Project and for conformance with the information indicated on the Drawings and stated in the Specifications. Review of separate item as such will not indicate review of the assembly in which the item functions. Review of submittals shall not relieve the Contractor of responsibility for any deviation from the requirements of the Contract Documents, nor for errors or omissions in the submittals; or for the accuracy of dimensions and quantities, the adequacy of connections, and the proper and acceptable fitting, execution, functioning and completion of the work. Review shall not relieve the Contractor of responsibility for the equipment fitting within the allotted space shown on the drawings with all clearances required for equipment operation, service and maintenance including minimum clearances required by applicable codes, manufacturer's installation instructions and as necessary for proper clearance in front of all electrical panels as defined by the National Electric Code (NEC). Any relocation of plumbing and/or electrical equipment, materials and systems required to comply with minimum clearances shall be provided by the Contractor without additional cost under the Contract.

J. Shop drawings will be returned unchecked unless the following information is included: cover sheet shall be provided for each submittal of equipment, products and material proposed for use on the project. A common cover sheet for similar equipment (example: all air handling units or all fire protection products) is acceptable. The cover sheet shall list equipment by symbol number; reference all pertinent data in the Specifications or on the drawings; provide size and characteristics of the equipment, name of the project and a space large enough to accept a review stamp. The data submitted shall reflect the actual equipment performance under the specified conditions and shall not be a copy of the scheduled data on the drawings. Cover sheet shall clearly identify any deviations from the specifications for submitted equipment, products, and materials.

K. Use of substitutions reviewed and checked by the Engineer does not relieve the Contractor from compliance with the Contract Documents. Contractor shall bear all extra expense resulting from the use of any substitutions where substitutions affect adjoining or related work required in this Division or other Divisions of this Specification.

L. If Contractor substitutes equipment for that drawn to scale on the drawings, he shall prepare a 1/4" = 1'-0" installation drawing for each equipment room where a substitution is made, using dimensions of substituted equipment, and including piping, and electrical equipment requirements, to verify that equipment will fit space with adequate clearances for maintenance. This 1/4" ~ 1'-0" fabrication drawing shall be submitted for review with the shop drawing submittals of the substitution. Failure to comply with this requirement will result in the shop drawings being returned unchecked.

1.9 COORDINATION DRAWINGS

A. The Contractor shall, in advance of the work, prepare coordination drawings for:
   1. Equipment rooms, and other spaces housing plumbing equipment, etc.
   2. Piping and chases.
   3. Complete plumbing piping systems located within the building.

4. Layout of all plumbing equipment.

B. Show the location of piping openings through the building floors, walls and roofs coordinated with Architectural and Structural, as well as the location and elevations of building fire suppression equipment and systems, including piping, coordinated with HVAC plumbing, fire suppression and electrical systems. Coordination drawings, including plans, elevations and sections, as appropriate, shall clearly show the manner in which the plumbing systems fit into the available space and coordinates with HVAC and plumbing equipment, ductwork, piping, sprinkler heads, and electrical equipment, including conduits, light fixtures, motor control centers, transformers, panels, variable frequency drives, etc. Drawings shall demonstrate required code clearances for mechanical and electrical equipments, control panels, etc., and proper operation, maintenance and replacement of plumbing devices and equipment. Coordination drawings shall be of appropriate scale to satisfy the previously stated purposes, but not smaller than 1/8 inch scale for floor plans and 1/4 scale of equipment rooms and chase areas. Drawings may be composite or may be separate but fully coordinated drawings of the same scale. Every subcontractor must sign-off on coordination drawings prepared by each craft. Failure to sign-off will indicate that subcontractor is proceeding at his own risk. Any cost required to relocate systems to comply with required clearance and equipment installation requirements shall be provided by the Contractor without additional cost under the contract.

C. Seven (7) complete sets of coordination drawings shall be submitted prior to the scheduled start of the work in the area illustrated by the drawings, for the purpose of showing the Contractor's planned method of installation. The objectives of such drawings are to promote carefully planned work sequence and proper coordination, in order to assure the expeditious solutions of problems, and the installation of lines and equipment as contemplated by the contract documents while avoiding or minimizing additional costs to the Contractor and to the Owner.

D. In the event the Contractor, in coordinating the various installations and in planning the method of installation, finds a conflict in location or elevation of any of the plumbing systems, with the structural items or with other construction items, such conflicts shall immediately be documented and submitted for clarification. In doing so, the Contractor shall explain the proposed method of solving the problem, or shall request instructions as to how to proceed if adjustments beyond those of usual trades coordination are necessary.

1.10 USE OF CADD FILES

A. Under certain conditions, the Contractor will be permitted the use of the Engineer's CADD files for documentation of as-builts, submittals, or coordination drawings.

B. The Engineer shall be compensated for the time required to format the CADD files for delivery to the Contractor. Such work may include removal of title blocks, professional seals, calculations, proprietary information, etc.

C. The Contractor shall complete the enclosed License, Indemnity and Warranty Agreement, complete with contractor's name, address, and Contractor's Representative signature prior to request for CADD file usage.

1.11 PRIOR APPROVAL

A. Prior approval of plumbing equipment not listed under these specifications is required. Requirements for prior approval in Division I or other sections of this specification do not override the requirements of this section. All prior approvals must be submitted to the Owner and Consultant for review at least 15 days prior to bid date.

B. See Division 1 for additional substitutions and product options requirements.

C. Identification of Division 22 equipment, and materials listed within this specification and in the Equipment Schedules on the drawings, which are identified by Manufacturer's Name, Trade Name, and/or Model Numbers are generally not meant to give preference to any manufacturer, but are provided to establish the design requirements and standards. Additional manufacturers judged to be "equivalent" to the specified product may also be listed.

D. Requests for proposed substitutions for unspecified Division 22 major items of equipment, and materials shall be submitted by the manufacturer, supplier, and/or sub-contractor for review. Three (3) copies of Division 22 prior approval requests shall be submitted and received not later than fifteen (15) calendar days prior to the bid date.

E. One (l) copy of prior approval submittal data shall be sent to the Architect, the second copy sent to the Engineer, and the subsequent third copy shall be sent directly to the Owner.

F. Requests for prior approval received after the specified due date will not be considered.

G. Division 22 prior approval equipment and materials which are submitted as specified herein and accepted will be included in an Addendum. Equipment and materials which are accepted under this prior approval process are accepted for bidding purposes only, subject to all requirements, terms, and conditions of the Contract Documents, including the Submittal Section contained herein.

H. Division 22 prior approval substitution requests shall be submitted utilizing the *Division 22-Substitution Request Form* included at the end of this section.

1.12 GUARANTEE-WARRANTY

A. See Division 1 for warranties.
B. The following guarantee is a part of the specifications and shall be binding on the Contractor:

"The Contractor guarantees that this installation is free from defects. He agrees to replace or repair any part of the installation which may fail within a period of one year after date of Final Completion, provided that such failure is due to defects in the materials or workmanship or to failure to follow the specifications and drawings. Warranty of the Contractor-furnished equipment or systems shall begin on the date the system and/or equipment are accepted by the owner in the Final Acceptance Certificate.

C. The extent of guarantees or warranties by Equipment and/or Materials Manufacturers shall not diminish the requirements of the Contractor's guarantee-warranty to the Owner.

1.12 FEES AND PERMITS

A. The Contractor shall provide, procure, and pay for all permits, licenses, certificates, inspections, etc. required to carry and complete the work.

1.13 PERFORMANCE BOND AND LABOR AND MATERIAL PAYMENT BOND

A. Mechanical and Plumbing Contractors shall be able to furnish bonds covering the faithful performance of the Contract and the payment of all obligations arising thereunder as required in the Bidding Documents or in the Contract Documents. With the execution and delivery of the contract, Contractor shall be able to furnish and pay for a Performance and a Payment Bond on the Owner's approved forms, each in the amount of the Contract Price, written by a Surety who meets the requirements in the Instructions to bidders. This Performance Bond if required shall cover the Contractor's one-year guarantee period as well as the actual construction work.

PART 2 - PRODUCTS

2.1 QUALITY OF MATERIALS

A. All equipment and materials shall be new, and shall be the standard product of manufacturers regularly engaged in the production of plumbing equipment and shall be the manufacturer's latestdesign. Specific equipment, shown in schedules on drawings and specified herein, is to set forth a standard of quality and operation. All materials shall be manufactured in the United States.

2.2 ALTITUDE RATINGS

A. Unless otherwise noted, all specified equipment capacities are for an altitude of 4,000 feet above sea level and adjustments to manufacturer's ratings must be made accordingly.

2.3 ELECTRICAL SERVICES - MOTORS

A. Each motor, unless otherwise specified of 3/4 HP and greater, shall be designed for operation with 3phase, 60 Hz, 480 volt electrical service. Unless otherwise specified, motors of 1/2 hp and less shall be designed for operation with single phase, 60 Hz, 120 volt electrical service. Motors shall be 1750 RPM, squirrel cage, normal starting torque and normal starting current, in accordance with NEMA standards unless otherwise specified.

B. All T-frame, ODP motors 5 HP and above shall be premium efficiency motors with a minimum power factor of 0.85 on 1800 RPM motors and a minimum efficiency rating in accordance with IEEE Standard 112, Test Method 'B' as scheduled below. In addition, all motors used in conjunction with variable frequency drives shall be premium efficiency.

C. Motors, including premium efficiency motors shall be manufactured by General Electric Baldor, Louis Allis (Spartan), Marathon, Reliance Electric, Westinghouse, or equivalent having equal efficiencies.

D. Special motors as may be necessary by the application and as specified herein and on the drawings include C-FACE, totally enclosed fan cooled (TEFC),explosion-proof, etc., shall be provided as required and shall be furnished manufacturer's premium efficiency rating for 5 HP and larger.

E. Each motor shall be of the horsepower as specified and suitable for use at an altitude of 4,000 feet. All motors shall have grease lubricated sealed ball bearings. Motors larger than I HP shall have a standard grease fitting "Zerk" and a separate grease relief tapping. Motors shall be factory lubricated. Motors shall be commercially dynamically balanced and tested at the factory before shipment and shall be selected for quiet operation. The Contractor shall line up motors and drives and place motors and equipment on foundations ready for operation.

F. Unless indicated otherwise, motors shall be NEMA design B with a service factor of 1.15 with 40°C rise and total temperature rise of65°C ambient and when powered from the system voltage feeding the motor. TEFC motors shall have a service factor of 1.00 with total temperature rise of65°C in the above conditions. Motors located in areas exceeding 40°C in the ambient shall be factory rated for the ambient temperature of the motor environment. Single phase motors shall generally be NEMA Type N split phase induction motors with built-in thermal protectors. Unless otherwise specified for a particular application use electric motors with the following requirements:
1. Single-phase Motors: Capacitor-start type for hard starting applications. Motors for centrifugal fans and pumps may be split phase or permanent split capacitor (pSC).
2. Polyphase Motors: NEMA Design B, Squirrel cage, induction type. Each two speed motor shall have two separate windings.
3. Rating: Continuous duty at 100% capacity in an ambient temperature of40°C.

G. If the Division 22 Contractor proposes to furnish motors varying in horsepower and/or characteristics from those specified, he shall first submit his request for the change and shall then coordinate the change with Division 26 and shall pay all additional charges in connection with the change.

2.4 ELECTRICAL W1R1NG AND CONTROL EQUIPMENT

A. All wiring and conduit shall be furnished and installed as scheduled in Section 22 0549 unless otherwise noted or directed.

B. The Contractor shall coordinate completely with all trades and Sub-Contractors as required to ensure that all necessary components ofcontrol work are included and fully understood. No additional cost shall accrue to the Owner as a result of lack of such coordination.

C. The piping system may be bonded to the electrical ground bus at the electrical service equipment, but shall not under any circumstances be used as the main grounding electrode for the electrical service.

2.5 PAINTING

A. All finish painting of plumbing systems and equipment will be under "Painting," unless equipment is hereinafter specified to be provided with factory applied finish coats.
B. All equipment shall be provided with factory applied prime finish, unless otherwise specified.

C. Touch-Up: If the factory finish on any equipment is damaged in shipment or during construction of the building, the equipment shall be refinished.

2.6 COUPLING GUARDS

A. All flexibly connected pumps shall be provided with protective steel coupling guards.

2.7 IDENTIFICATION OF VALVES

A. Each valve shall be provided with a stamped metal tag secured to the valve. Tag shall indicate the valve number, the service and function of each valve The Contractor shall furnish two sets of prints of drawings showing floor plan for each floor with all valves accurately located and labeled. Submitted drawings shall be neat and easily readable. The Contractor shall provide a valve chart, typed neatly on 8-1/2" x 11" sheets, listing the number, size, location, function, normal operating position, on each valve installed under Division 22. Valves shall be listed by system, i.e. domestic cold water, hot water, chilled water etc. Tags shall be stamped brass 1-1/2" diameter, and secured to valves by heavy copper figure eight hooks, braided stainless steel wire anchor, or other approved means.

B. Division 22 valve tags shall be coordinated with Division 21 and Division 23 valve tags for coordinated format between each Division.

C. Valve tags shall be coordinated with existing facility valve tags and Contractor shall obtain a copy of existing facility valve chart and provide updated valve chart to the Owner's Representative.

2.8 PIPING SYSTEM IDENTIFICATION

A. Means of Identification: All piping and duct systems shall be identified by each of the means described below. The Contractor shall provide shop drawing submittal data for proposed labeling system materials and manufacturer's recommended installation procedures.

B. Piping Systems shall be identified by means of an identifying legend on color coded background appropriately worded to indicate the "service" name of the pipe as shown on the drawings. Color coded banding shall also be provided. Additionally, an arrow shall be included to indicate the direction of flow through the pipe.

C. Locations of Piping System Identification: The identifying legends and directional arrows described in the paragraphs preceding shall be located at the following points on each piping system:

- Adjacent to each valve in piping system.
- At every point of entry and exit where piping passes through a wall.
- On each pipe riser and junction.
- At a maximum interval of20 feet on pipe lines exposed and concealed above accessible ceilings.
- Adjacent to all special fittings (regulating valves, etc.) in piping systems.
- At every access door.

D. Piping identification shall meet the standards of the Federal Occupational Safety Health Act (OSHA) which refers to the ANSI Standard A13.1. The following standardized color code scheme shall be used:

Yellow - Hazardous Materials
Green - Liquid Materials of Inherently Low Hazard
Blue - Gaseous Materials of Inherently Low Hazard
Red - Fire Protection Materials

E. The size of letter and length of color field shall conform to the ANSI standard and shall be as follows:

Outside Diameter of Pipe or Covering	Length of Color Field	Size of Letters
to 1-1/4"	8"	1/2"
1-1/2" to 2"	8"	3/4"
2-1/2" to 6"	12"	1-1/4"
8" to 10"	24"	2_1/2"
Over 10"	32"	3-1/2"

F. All pipe labels exposed within mechanical equipment spaces shall be semi-rigid plastic identification markers. Each label shall have appropriately color-coded background with printed legend. Directional flow arrows shall be included on label. Labels shall "snap-on" around pipe without the requirement for adhesive or bonding of piping sizes 3/4" through *S".* Labels for piping 6" and larger shall be furnished with spring attachment at each end of label. Labels shall be "SETMARK" Type SNA, 3/4" through S" size and Type STR, 6" and larger, as manufactured by Seton Name Plate Corporation, Brady, or equivalent.

G. Attach pipe markers to lower quarter of the pipe on horizontal runs and on the centerline of vertical piping where view is not obstructed. Flow indicator arrow shall point away from pipe marker.

H. Provide the following labels, with ANSI/OSHA color for all piping systems as shown on the drawings and as listed below:

Service/Legend	Letter Color	Background Color
Domestic Cold Water	White	Green
Domestic Hot Water	Black	Yellow
Domestic Hot Water Return	Black	Yellow
Cold Water	White	Green
Roof Drain	White	Green
Sanitary Sewer	White	Green

2.9 IDENTIFICATION OF CONTROL SYSTEM DEVICES

A. All automatic controls, control panels, zone valves, pressure electric, electric pressure switches, relays and starters shall be clearly tagged and identified. Wording shall be identical to that on the control diagram in the contract drawings.

2.10 UNDERGROUND PIPING SYSTEM IDENTIFICATION

A. Bury a continuous, preprinted, bright colored, plastic ribbon cable marker with each underground pipe regardless of whether encased. Locate directly over buried pipe, 6" to 8" below finished grade. Marker tape used in conjunction with buried plastic piping systems shall be special detector type. Marker tape used in conjunction with buried plastic piping systems shall be special detection type.

PART 3 - EXECUTION

3.1 COOPERATION WITH OTHER TRADES

A. The Contractor shall refer to other parts of these specifications covering the work of other trades which must be carried on in conjunction with the plumbing work so that the construction operations can proceed without harm to the Owner from interference, delay, or absence of coordination. The Contractor shall be responsible for the size and accuracy of all openings.

3.2 DRAWINGS

A. The plumbing drawings show the general arrangement of all piping, fixtures, equipment, etc., and shall be followed as closely as actual building construction and work of other trades will permit. Whenever discrepancies occur between plans and specifications, the most stringent shall govern. All Contract Documents, including but not limited to Division 21 Fire Suppression, Division 23 HVAC, and Division 26 Electrical shall be considered as part of the work insofar as this information furnishes the Contractor with details relating to design and construction of the building. Architectural and Structural drawings shall take precedence over the plumbing, HVAC and fire suppression drawings. Because of the small scale of the plumbing, HVAC and fire suppression drawings, it is not possible to indicate all offsets, fittings and accessories which may be required. The Contractor shall investigate the structural and finish conditions affecting the work and shall arrange his work accordingly, providing such fittings, valves, and accessories as may be required to meet such conditions. Should conditions necessitate a rearrangement of piping, such departures and the reasons therefore shall be submitted by the Contractor for review in the form of detailed drawings showing the proposed changes. No such changes shall be made without the prior written approval. All changes shall be marked on the set of record drawings by the Contractor.

B. Should any doubt or question arise in respect to the true meaning of the drawings or specifications, the question shall be submitted in writing.

C. Installation of all plumbing equipment and piping systems shall be arranged to provide all clearances required for equipment operation, service, and maintenance, including minimum clearances required by applicable codes, manufacturer's installation instructions and as necessary for proper clearance in front of all electrical panels as defined by the National Electric Code (NEC). Piping systems shall not be routed through or above electrical equipment room or electrical equipment space designed within equipment rooms.

D. The Contractor's attention is directed to the unique architectural design features and consideration associated with this facility which will require significantly greater levels of coordination and cooperation for the work furnished and installed under Division 22 with the associated architectural, structural, and electrical work than is normally necessary for a more typical facility.

E. The installation of all concealed plumbing systems shall be carefully arranged to fit within the available space without interference with adjacent structural and electrical

systems. The Contractor shall make all necessary provisions for penetrations of piping, including sleeves and blockouts in structural systems. The exact location of all exposed plumbing systems; access doors; piping exposed within finished areas; and other equipment and devices as applicable, shall be coordinated with the Architect, who shall have final authority for the acceptance of the work as it specifically relates to the architectural aesthetic design requirements for the facility.

3.3 FIELD MEASUREMENTS

A. The Contractor shall verify the dimensions and conditions governing his work at the building. No extra compensation shall be claimed or allowed on account of differences between actual dimensions, including dimensions of equipment, fixtures and materials furnished, and those indicated on the drawings. Contractor shall examine adjoining work, on which his work is dependent for perfect efficiency, and shall report any work which must be corrected. Coordination of all plumbing work within the building will be the direct responsibility of the Contractor. Review of submittal data in accordance with paragraph "Submittals" shall in no manner relieve the Contractor of responsibility for the proper installation of the plumbing work within the available space. Installation of equipment and systems within the building space shall be carefully coordinated by the Contractor with all building trades. Each contractor shall so harmonize his work with that of the several other trades that it may be installed in the most direct and workmanlike manner without hindering or handicapping the other trades. Piping interferences shall be handled by giving precedence to pipe lines which require a stated grade for proper operation. Sewer lines shall take precedence over water lines in determination of elevations. In all cases, lines requiring a stated grade for their proper operation shall have precedence over electrical conduit and ductwork. Installation of plumbing, HVAC and fire suppression equipment within the ceiling cavity shall be in the following order of priority: plumbing waste lines; roof drains; supply, return, outside air, makeup, and exhaust ductwork; fire sprinkler mains; fire sprinkler branch piping and sprinkler runouts; heating hot water and chilled water piping; domestic hot and cold water; control piping, wiring and conduit.

3.4 EQUIPMENT SUPPORT

A. Contractor shall provide support for equipment to the building structure. Contractor shall furnish all necessary structures, inserts, sleeves, and hanging devices for installation of mechanical and plumbing equipment, ductwork and piping, etc. Contractor shall completely coordinate installation of such devices with all trades and Sub-Contractors. Contractor must further verify that the devices and supports are adequate as intended and do not overload the building's structural components in anyway.

3.5 PROTECTION OF MATERIALS AND EQUIPMENT

A. The Contractor shall be responsible for the protection of all work, materials and equipment furnished and installed under this section of the specifications, whether incorporated in the building or not.

B. Plumbing equipment and materials, including piping, valves and fittings, etc., shall be protected from damage and contamination. Equipment and materials shall not be stored outside and exposed to weather and ambient conditions without appropriate protection

measures and without the approval of the Architect. Equipment and materials shall be delivered to the jobsite and maintained while on the jobsite with all openings, controls and control panels covered with caps, with heavy duty polyethylene wrap or other proper means. Equipment and materials where stored within the building shall be protected at all times from construction damage and contamination from dust, dirt, debris, and especially during fire-proofing, painting and gypboard sanding and finishing. Unprotected equipment and piping will require special field cleaning by the Contractor prior to acceptance by the Architect.

C. The Contractor shall provide protection for all work where necessary and shall be responsible for all damage done to property, equipment and materials. Storage of materials within the building shall be approved by the Architect prior to such storage.

D. Pipe openings shall be closed with caps or plugs, or covered to prevent lodgment of dirt or trash during the course of installation. At the completion of the plumbing work, fixtures and materials shall be cleaned and polished thoroughly and delivered in a condition satisfactory to the Architect.

3.6 TRENCHING AND BACKFILLING

A. All excavation, trenching and backfilling required for the plumbing installation shall be provided by this Contractor.

3.7 MANUFACTURER'S INSTRUCTIONS

A. All equipment shall be installed in strict accordance with recommendations of the manufacturer. If such recommendations conflict with plans and specifications, the Contractor shall report such conflicts to the Architect, who shall make such compromises as he deems necessary and desirable.

3.8 CONCRETE BASES AND HOUSEKEEPING PADS

A. Concrete bases and housekeeping pads shall be installed under all pieces of plumbing equipment unless specifically deleted by the specifications or drawings.

B. Contractor shall be responsible for the accurate dimensions of all pads and bases and shall furnish and install all vibration isolators, anchor bolts, etc.

C. Contractor shall provide concrete housekeeping pad foundations for all floor mounted equipment installed under this section unless otherwise shown on the drawings. All concrete bases and housekeeping pads shall conform to the requirements specified under Division 3, Concrete, portions of these specifications. Pad foundations shall be 4" high minimum, unless otherwise indicated on the drawings. Chamfer edges shall be 1". Faces shall be free of voids and rubbed smooth with carborundum block after stripping forms. Tops shall be level. Provide dowel rods in floor for lateral stability and anchorage.

D. Equipment anchor bolts shall be set in a galvanized pipe or sheet metal sleeves 1" larger than bolt diameter. Anchor bolts shall be high strength steel J shape. Anchor bolt design shall be arranged and paid for by the Contractor.

E. Machinery bases, bed plates, sole plates, or vibration isolation units shall be carefully aligned, shimmed, leveled, then grouted in place with commercial non-shrink grout. When a flexible coupling is employed as a part of the drive train, the coupling shall be aligned before the machinery base is grouted.

3.9 EQUIPMENT FURNISHED UNDER OTHER SECTIONS OF THESE SPECIFICATIONS

A. Certain items of mechanical equipment as listed on the drawings and/or specifications will be furnished under other sections of this specification for mechanical rough-in and connection under Division 22, including plumbing, domestic water, etc. All required plumbing services, including connection of such services to equipment shall be provided under Division 22.

3.10 ALIGNMENT OF FLEXIBLE COUPLINGS

A. Flexible couplings between motors and driven equipment shall be aligned by the qualified service technician after the equipment is installed and ready for operation. Proper aligning shall be provided within manufacturer's maximum alignment tolerance at equipment operating conditions and temperature. Alignment shall follow unit manufacturer's written procedures using approved dial indication methods for parallel and angular alignment. The Contractor shall provide written certification that each device has been so aligned.

3.11 LUBRICATION

A. The Contractor shall provide all oil for the operation of all equipment until acceptance. The Contractor shall be held responsible for all damage to bearings while the equipment is being operated by him up to the date of acceptance of the equipment. The Contractor shall protect all bearings and shafts during installation and shall thoroughly grease the steel shafts to prevent corrosion. Bearings for items of plumbing equipment shall be marked at each bearing location as to whether the bearing is a sealed type or relubricable type unit.

3.12 PRESSURE RELIEF DEVICES

A. Pressure relief devices and fusible plugs shall be installed with piping to a safe location in accordance with Code requirements.

3.13 TESTS

A. Tests shall be conducted in the presence of the designated and authorized Owner's Representative. The Contractor shall notify the Architect a minimum of one week in advance of scheduled tests. Requirements for testing are specified under the sections covering the various systems. The Contractor shall furnish all necessary equipment, materials, and labor to perform the required tests.

3.14 INSTALLATION CHECK

A. An experienced, competent, and authorized representative of the equipment listed below shall visit the site of the work and inspect, check, adjust if necessary, and approve the equipment installation. In each case, the equipment supplier's representative shall be present when the equipment is placed in operation. The equipment supplier's representative shall revisit the job site as often as necessary until all trouble is corrected and the equipment installation and operation is approved and accepted.

B. Each equipment supplier's representative shall furnish a written report certifying that the equipment (1) has been properly installed and lubricated; (2) is in accurate alignment; (3) is free from any undue stress imposed by connecting piping or anchor bolts; and, (4) has been operated under full load conditions and that it has operated satisfactorily.

C. Equipment requiring installation check includes the following:
Domestic Water Heaters and Boilers.

3.15 OPERATION AND MAINTENANCE INSTRUCTIONS

A. The Contractor shall furnish complete operating and maintenance instructions covering an units of plumbing equipment fixtures, faucets, etc., herein specified together with parts lists. Equipment spare parts shall include all components requiring service, including motors, bearings, shafts, etc.

B. See Division 1 for additional requirements concerning manuals, manual distribution, and maintenance materials.

C. Operating and maintenance manuals as required herein shall be submitted for review and distribution to the Owner not less than two (2) weeks prior to the date scheduled for the Contractor to provide Operating and Maintenance Instructions to the Owner as specified herein.

D. Upon completion of all work and all tests, Contractor shall furnish the necessary skilled labor and helpers for operating the plumbing systems and equipment for a period of five (5) days of eight (8) hours each. During this period, the Contractor shall instruct the Owner or his representative fully in the operations, adjustment and maintenance of all equipment furnished. Contractor shall provide at least two weeks notice in advance of this period, with a written schedule of each training session, the subject of the session, the Contractors' representatives who plan to attend the session, and the time for each session.

E. Operational test shall be conducted by the Contractor with the assistance of the equipment manufacturer's representative or service technician. Test shall be conducted in the presence of the designated and authorized Owner's Representative.

3.16 CERTIFICATIONS

A. Before receiving final payment, the Contractor shall certify in writing that all equipment furnished and all work done is in compliance with the contract documents and all applicable codes. Submit certifications and acceptance certificates, including proof of delivery of O&M manuals, spare parts required, and equipment warranties which shall be bound with O&M manuals.

3.17 INTERRUPTING SERVICES

A. The Contractor shall coordinate the installation of all plumbing work onsite and within the building in order to minimize interference with the operation of existing building and onsite mechanical, plumbing, fire protection, and utility systems during construction. Connections to existing systems requiring the interruption of service within the building shall be carefully coordinated with the Owner to minimize system downtimes. Requests

for the interruption of existing services shall be submitted in writing a minimum of two (2) weeks before the scheduled date. Absolutely no interruption of the existing services will be permitted without written review and authorization.

3.19 OPERATION PRIOR TO ACCEPTANCE

A. Operation of equipment and systems installed by the Division 22 Contractor for the benefit of the Owner prior to substantial completion will be allowed providing a written agreement between the Owner and the Contractor has established warranty and other responsibilities to the satisfaction of both parties.

3.20 SITE VISITS AND OBSERVATION OF CONSTRUCTION

A. The design professional shall make periodic visits to the project site at various stages of construction in order to observe the progress and quality of various aspects of the Contractor's work, in order to determine in general if such work is proceeding in accordance with the Contract Documents. This observation, however, shall in no way release the Contractor from his complete responsibility to supervise, direct, and control all construction work and activities. The design team has no authority over, or a responsibility to means, methods, techniques, sequences, or procedures of construction provided by the Contractor or for safety precautions and programs, or for failure by the Contractor to comply with all law, regulations, and codes.

B. Prior to the "Final" observation visit, the attached "Final Observation Checklist" shall be completed by the Contractor. Any non-applicable items shall be marked "N/A." The completed form shall be submitted, indicating that all necessary items are complete and requesting a final observation within 10 days. The Contractor shall be notified of any uncompleted items within seven (7) days. A resubmittal of the form and a new final observation request by the Contractor is required if the form is returned and noted as incomplete.

END OF SECTION

Project:_____ Date Submitted:_____
General Contractor:_____ Date of Final Mechanical System:_____
Mechanical Contractor: _____ Observation Requested:_____

CONTRACTOR'S MECHANICAL & PLUMBING CHECK LIST
(ALL APPLICABLE ITEMS MUST BE COMPLETED PRIOR TO FINAL OBSERVATION)

In advance of requesting a final mechanical observation for installed mechanical systems, please check all items that have been completed. For all items not applicable to this project mark N/A.

HVAC/PIPING

____1. All plumbing fixtures are set, sealed and cleaned.
____2. All domestic pipe systems are insulated.
____3. All pipe systems are identified with specified labels and directional arrows.
____4. Floor sinks and drain grates are cleaned and debris removed.
____5. Valve tags are installed.
____6. Special equipment (water softeners, water heaters, piping systems, etc.) have been checked and put into service.
____7. Medical gas systems have been checked and certified.
____8. Special piping systems have been cleaned and pressure tested.

_____Process Piping _____Nitrogen
_____Compressed Air _____Vacuum
_____Natural Gas _____Argon
_____Other _____Medical Gas

____9. Limestone chips have been installed in acid dilution sumps.
____10. Plumbing/piping connections have been completed to Owner furnished equipment and equipment furnished by other Contractors/Sub-Contractors.
____11. Exterior wall hydrants have been cleaned.
____12. Concrete collars have been installed at clean-out to grade, valve box, or other specified plumbing items.
____13. Drains and relief lines from plumbing equipment have been installed and secured in a proper manner.
____14. All plumbing equipment and areas of equipment have been cleaned and debris removed.
____15. All plumbing equipment required by the Specifications has been identified and/or numbered.
____16. Domestic water systems sterilization has been completed.
____17. Strainers/suction diffusers have been cleaned.
____18. Backflow preventers have been tested.
____19. Air has been vented from all systems.
____20. Ethylene glycol system has been charged with correct mixture and tested.
____21. Water systems have been cleaned (X) and pressure tested (P).

_____Non-potable Water _____Domestic Hot Water
_____Domestic Cold Water _____Acid Waste and Vent
_____Sanitary Sewer & Vent _____Roof and Overflow Drains
_____Other (list)

____22. PRV's have been adjusted (water, gasses).

PLUMBING EQUIPMENT

___1. All pump shafts and couplings have been aligned.
___2. Boilers and domestic water heaters have been fired and tested.
___3. All plumbing equipment has been lubricated.
___4. Plumbing equipment has been labeled in accordance with the specifications.
___5. "HAZARDOUS AREA" signs installed where applicable.
___6. Variable frequency drives have been tested by the manufacturer's representative and certified to be in compliance with all of the specified requirements.

GENERAL ITEMS

The following specified items have been submitted:
___1. Record drawings (to be submitted prior to final payment to the Contractor).
___2. Operation and maintenance manuals.
___3. Manufacturer's representative installation check and certification submitted (see list of equipment, Section 220500).
___4. Test kits furnished to Owner.
    ___Flow Measuring Devices
    ___Flow Balance Valves
    ___Flow Control Devices
___5. Control schematics and sequence of operation.
___6. Plumbing equipment and lubrication, valve, charts have been provided to Owner's Representative.

END CHECKLIST

DIVISION 22 SUBSTITUTION REQUEST FORM (SRF)

TO: ALEGRO ENGINEERING, L.P.

PROJECT:_____

We hereby submit for your consideration the following product instead of the specified item for the above project:
Section: _____ Page: _____ Paragraph/Line: Specified Item: _____

Proposed Substitution:_____

Attach complete product description, drawings, photographs, performance and test data, and other information necessary for evaluation. Identify specific Model Numbers, finishes, options, etc.

1. Will changes be required to building design in order to properly install proposed substitutions? YES __ NO ___; If YES, expIain: _____
2. Will the undersigned pay for changes to the building design, including engineering and drawing costs, caused by requested substitutions? YES ____ NO ____
3. List differences between proposed substitutions and specified item.

Specified Item	Proposed Substitution
_____	_____
_____	_____

4. Does substitution affect Drawing dimensions? YES ____ NO ____
5. What affect does substitution have on other trades? _____

6. Does the manufacturer's warranty for proposed substitution differ from that specified? YES___ NO___
If YES, explain: _____
7. Will substitution affect progress schedule? YES___ NO___
If YES, explain: _____
8. Will maintenance and service parts be locally available for substitution? YES___ NO___
If YES, explain: _____
9. Does proposed product contain asbestos in any form? YES___ NO___
SUBMITTED BY: Firm: _____Date: _____
Address: _____
Signature: _____

LICENSE, INDEMNITY AND WARRANTY AGREEMENT

BETWEEN: Alegro Engineering, L.P.
5822 Cromo Drive Suite #105
El Paso, TX 79912

and the Contractor: _____

For use of CADD Database by the Contractor for:

PROJECT: _____

LICENSE:_____

1.1 LICENSE GRANT: The Contractor is granted use of the CADD Database for the specific purpose of preparing submittal documents for the Project. No other use of the CADD Database is granted. Title to the CADD Database is not transferred to the Contractor.

1.2 COPYING RESTRICTIONS: The Contractor may copy the CADD Database in whole or in part, only for backup and archival purposes and for use by the Contractor's Subcontractors. All of the Contractor's Subcontractors who receive a copy of the CADD Database in whole or in part shall be bound by the terms and conditions of this Agreement.

1.3 TRANSFER OF CADD DATABASE: The Contractor may not transfer the CADD Database to any other party other than as specified in Section 1.2 of this Agreement.

WARRANTY

2.1 DATABASE WARRANTY: Alegro Engineering, L.P. disclaims all warranties with regard to the database supplied hereunder, including all implied warranties of fitness. Alegro Engineering, L.P. disclaims all obligations or liabilities for damages, including, but not limited to, consequential damages rising out of or in connection with the use of performance of the database.

INDEMNITY

3.1 INDEMNITY: The Contractor recognizes that the use of the database will be at the Contractor's sole risk and without any liability, risk or legal exposure by Alegro Engineering, L.P. The Contractor recognizes that it is impossible for the Engineer to assure the accuracy, completeness and sufficiency of such information, either because it is impossible to verify, or because of errors or omissions which may have occurred in assembling the information the Engineer is providing. Furthermore, in that these CADD Database files are considered to be information furnished to the Contractor by others, it shall be the Contractor's sole responsibility to verify dimensions in the drawings prior to using these database files for his intended purpose. Furthermore, the Contractor shall, to the fullest extent permitted by law, defend, indemnify and hold harmless Alegro Engineering, L.P., from all claims, damages, losses, and attorney fees arising out of or resulting from the use of the database.

COMPENSATION

3.2 COMPENSATION: The Contractor shall compensate Alegro Engineering, L.P. for the time required to format the CADD files for delivery to the Contractor. Such work may include removal of title blocks, professional seals, calculations, proprietary information, etc. No time shall be expended making any substantive changes to the drawings. The cost for this time will be billed at the rate of$75.00 / Hour. It is not anticipated that more than four (4) hours will be required to complete this task. An invoice will be generated and delivered with the drawing files. Payment for the services shall be made within thirty (30) days of the receipt of the invoice.

ACKNOWLEDGMENT

4.1 ACKNOWLEDGMENT: The Contractor acknowledges that (s)he has read this Agreement, understands it, and agrees to be bound by its terms and conditions.

CONTRACTOR'S REPRESENTATIVE

Authorized Signature: _____
Title:_____
Date: _____

ALEGRO ENGINEERING, L.P.
Authorized Signature: _____
Title:_____
Date:_____

SECTION 22 13 00- FACILITY SANITARY SEWERAGE

PART 1 GENERAL

1.1 SUMMARY

A. Section Includes:
1. Pipe and pipe fittings for Sanitary sewer piping.
2. Cleanouts.

B. Related Sections:
1. Division 03 - Cast-In-Place Concrete: Execution requirements for placement of concrete specified by this section.
2. Division 26 - Equipment Wiring Connections: Execution requirements for electric connections to equipment specified by this section.
3. Division 32 - Soils for Earthwork: Soils for backfill in trenches.
4. Division 32 - Aggregates for Earthwork: Aggregate for backfill in trenches.
5. Division 32 - Excavation: Product and execution requirements for excavation and backfill required by this section.
6. Division 32 - Trenching: Execution requirements for trenching required by this section.
7. Division 32 - Fill: Requirements for backfill to be placed by this section.
8. Division 32 - Storm Utility Drainage Piping: Catch basins and manholes.

1.2 REFERENCES

A. American Society of Mechanical Engineers:
1. ASME A112.14.1 - Backwater Valves.
2. ASME A112.14.3 - Grease Interceptors.
3. ASME A112.14.4 - Grease Removal Devices.
4. ASME A112.21.1 - Floor Drains.
5. ASME B16.1 - Cast Iron Pipe Flanges and Flanged Fittings.
6. ASME B16.3 - Malleable Iron Threaded Fittings.
7. ASME B16.4 - Gray Iron Threaded Fittings.
8. ASME B16.23 - Cast Copper Alloy Solder Joint Drainage Fittings (DWV).
9. ASME B16.29 - Wrought Copper and Wrought Copper Alloy Solder Joint Drainage Fittings - DWV.
10. ASME B31.9 - Building Services Piping.

B. ASTM International:
1. ASTM A47/A47M - Standard Specification for Ferritic Malleable Iron Castings.
2. ASTM A53/A53M - Standard Specification for Pipe, Steel, Black and Hot-Dipped, Zinc-Coated, Welded and Seamless.
3. ASTM A74 - Standard Specification for Cast Iron Soil Pipe and Fittings.
4. ASTM A234/A234M - Standard Specification for Piping Fittings of Wrought Carbon Steel and Alloy Steel for Moderate and High Temperature Service.
5. ASTM A395/A395M - Standard Specification for Ferritic Ductile Iron Pressure-Retaining Castings for Use at Elevated Temperatures.
6. ASTM A536 - Standard Specification for Ductile Iron Castings.
7. ASTM B32 - Standard Specification for Solder Metal.
8. ASTM B42 - Standard Specification for Seamless Copper Pipe, Standard Sizes.

9. ASTM B43 - Standard Specification for Seamless Red Brass Pipe, Standard Sizes.
10. ASTM B75 - Standard Specification for Seamless Copper Tube.
11. ASTM B88 - Standard Specification for Seamless Copper Water Tube.
12. ASTM B251 - Standard Specification for General Requirements for Wrought Seamless Copper and Copper-Alloy Tube.
13. ASTM B302 - Standard Specification for Threadless Copper Pipe, Standard Sizes.
14. ASTM B306 - Standard Specification for Copper Drainage Tube (DWV).
15. ASTM C14 - Standard Specification for Concrete Sewer, Storm Drain, and Culvert Pipe.
16. ASTM C76 - Standard Specification for Reinforced Concrete Culvert, Storm Drain, and Sewer Pipe.
17. ASTM C443 - Standard Specification for Joints for Concrete Pipe and Manholes, Using Rubber Gaskets.
18. ASTM C478 - Standard Specification for Precast Reinforced Concrete Manhole Sections.
19. ASTM C564 - Standard Specification for Rubber Gaskets for Cast Iron Soil Pipe and Fittings.
20. ASTM C1053 - Standard Specification for Borosilicate Glass Pipe and Fittings for Drain, Waste, and Vent (DWV) Applications.
21. ASTM D1785 - Standard Specification for Poly (Vinyl Chloride) (PVC) Plastic Pipe, Schedules 40, 80, and 120.
22. ASTM D2235 - Standard Specification for Solvent Cement for Acrylonitrile-Butadiene-Styrene (ABS) Plastic Pipe and Fittings.
23. ASTM D2241 - Standard Specification for Polyethylene (PE) Plastic Pipe (SIDR-PR) Based on Controlled Inside Diameter.
24. ASTM D2464 - Standard Specification for Threaded Poly (Vinyl Chloride) (PVC) Plastic Pipe Fittings, Schedule 80.
25. ASTM D2466 - Standard Specification for Poly (Vinyl Chloride) (PVC) Plastic Pipe Fittings, Schedule 40.
26. ASTM D2467 - Standard Specification for Poly (Vinyl Chloride) (PVC) Plastic Pipe Fittings, Schedule 80.
27. ASTM D2564 - Standard Specification for Solvent Cements for Poly (Vinyl Chloride) (PVC) Plastic Piping Systems.
28. ASTM D2661 - Standard Specification for Acrylonitrile-Butadiene-Styrene (ABS) Schedule 40 Plastic Drain, Waste, and Vent Pipe and Fittings.
29. ASTM D2665 - Standard Specification for Poly (Vinyl Chloride) (PVC) Plastic Drain, Waste, and Vent Pipe and Fittings.
30. ASTM D2729 - Standard Specification for Poly (Vinyl Chloride) (PVC) Sewer Pipe and Fittings.
31. ASTM D2751 - Standard Specification for Acrylonitrile-Butadiene-Styrene (ABS) Sewer Pipe and Fittings.
32. ASTM D2855 - Standard Practice for Making Solvent-Cemented Joints with Poly (Vinyl Chloride) (PVC) Pipe and Fittings.
33. ASTM D2996 - Standard Specification for Filament-Wound Fiberglass (Glass-Fiber-Reinforced Thermosetting Resin) Pipe.
34. ASTM D2997 - Standard Specification for Centrifugally Cast Fiberglass (Glass-Fiber-Reinforced Thermosetting-Resin) Pipe.
35. ASTM D3034 - Standard Specification for Type PSM Poly (Vinyl Chloride) (PVC) Sewer Pipe and Fittings.
36. ASTM D3262 - Standard Specification for "Fiberglass" (Glass-Fiber-Reinforced Thermosetting-Resin) Sewer Pipe.
37. ASTM D3517 - Standard Specification for "Fiberglass" (Glass-Fiber-Reinforced Thermosetting-Resin) Pressure Pipe.

38. ASTM D3754 - Standard Specification for "Fiberglass" (Glass-Fiber-Reinforced Thermosetting-Resin) Sewer and Industrial Pressure Pipe.
39. ASTM D3840 - Standard Specification for "Fiberglass" (Glass-Fiber-Reinforced Thermosetting-Resin) Pipe Fittings for Nonpressure Applications.
40. ASTM F477 - Standard Specification for Elastomeric Seals (Gaskets) for Joining Plastic Pipe.
41. ASTM F628 - Standard Specification for Acrylonitrile-Butadiene-Styrene (ABS) Schedule 40 Plastic Drain, Waste, and Vent Pipe With a Cellular Core.
42. ASTM F708 - Standard Practice for Design and Installation of Rigid Pipe Hangers.
43. ASTM F1476 - Standard Specification for Performance of Gasketed Mechanical Couplings for Use in Piping Applications.

C. Cast Iron Soil Pipe Institute:
1. CISPI 301 - Standard Specification for Hubless Cast Iron Soil Pipe and Fittings for Sanitary and Storm Drain, Waste, and Vent Piping Applications.
2. CISPI 310 - Specification for Coupling for Use in Connection with Hubless Cast Iron Soil Pipe and Fittings for Sanitary and Storm Drain, Waste, and Vent Piping Applications.

D. Manufacturers Standardization Society of the Valve and Fittings Industry:
1. MSS SP 58 - Pipe Hangers and Supports - Materials, Design and Manufacturer.
2. MSS SP 69 - Pipe Hangers and Supports - Selection and Application.
3. MSS SP 70 - Cast Iron Gate Valves, Flanged and Threaded Ends.
4. MSS SP 71 - Cast Iron Swing Check Valves, Flanged and Threaded Ends.
5. MSS SP 80 - Bronze Gate, Globe, Angle and Check Valves.
6. MSS SP 89 - Pipe Hangers and Supports - Fabrication and Installation Practices.
7. MSS SP 110 - Ball Valves Threaded, Socket-Welding, Solder Joint, Grooved and Flared Ends.

E. Plumbing and Drainage Institute:
1. PDI G101 - Standard - Testing and Rating Procedure for Grease Interceptors.

F. Cast Iron Soil Pipe Institute:
1. CISPI 301 - Standard Specification for Hubless Cast Iron Soil Pipe and Fittings for Sanitary and Storm Drain, Waste, and Vent Piping Applications.
2. CISPI 310 - Specification for Coupling for Use in Connection with Hubless Cast Iron Soil Pipe and Fittings for Sanitary and Storm Drain, Waste, and Vent Piping Applications.

1.3 SUBMITTALS

A. Division 01 - Submittal Procedures: Submittal procedures.

B. Shop Drawings: Indicate dimensions, weights, and placement of openings and holes for manholes.

C. Product Data:
1. Piping: Submit data on pipe materials, fittings, and accessories. Submit manufacturers catalog information.
2. Sanitary Drainage Specialties: Submit manufacturers catalog information, component sizes, rough-in requirements, service sizes, and finishes.

D. Manufacturer's Installation Instructions: Submit installation instructions for material and equipment.

E. Manufacturer's Certificate: Certify products meet or exceed specified requirements.

1.4 CLOSEOUT SUBMITTALS

A. Division 01 - Execution and Closeout Requirements: Closeout procedures.

B. Project Record Documents: Record actual locations of equipment and clean-outs.

C. Operation and Maintenance Data: Submit frequency of treatment required for interceptors.

1.5 QUALIFICATIONS

A. Manufacturer: Company specializing in manufacturing products specified in this section with minimum five years documented experience.

B. Installer: Company specializing in performing Work of this section with minimum five years documented experience in projects similar in size and scope.

1.6 PRE-INSTALLATION MEETINGS

A. Division 01 - Administrative Requirements: Pre-installation meeting.

B. Convene minimum one week prior to commencing work of this section.

1.7 DELIVERY, STORAGE, AND HANDLING

A. Division 01 - Product Requirements: Product storage and handling requirements.

B. Protect piping systems from entry of foreign materials by temporary covers, completing sections of the Work, and isolating parts of completed system.

1.8 ENVIRONMENTAL REQUIREMENTS

A. Division 01 - Product Requirements.

B. Do not install underground piping when bedding is wet or frozen.

1.9 FIELD MEASUREMENTS

A. Verify field measurements prior to fabrication.

1.10 WARRANTY

A. Division 01 - Execution and Closeout Requirements: Product warranties and product bonds.

B. Furnish five-year manufacturer warranty for sewage ejectors.

PART 2 PRODUCTS

2.1 SANITARY SEWER PIPING, BELOW GRADE

A. Cast Iron Pipe: ASTM A74, service weight, bell and spigot pipes.
   1. Fittings: Cast iron, ASTM A74.
   2. Joints: ASTM C564, lead and oakum for spigot pipes.

2.2 CLEANOUTS

A. Manufacturers:
   1. J.R. Smith.
   2. Wade.
   3. Zurn.
   4. Watts
   5. Substitutions: Not Permitted without prior approval.

B. Exterior Surfaced Areas: Square cast nickel bronze access frame and non-skid cover.

C. Exterior Un-surfaced Areas: Line type with lacquered cast iron body and round epoxy coated cover with gasket.

PART 3 EXECUTION

3.1 EXAMINATION

A. Division 01 - Administrative Requirements: Coordination and project conditions.

B. Verify excavations are to required grade, dry, and not over-excavated.

C. Verify trenches are ready to receive piping.

3.2 PREPARATION

A. Ream pipe and tube ends. Remove burrs.

B. Remove scale and dirt, on inside and outside, before assembly.

C. Prepare piping connections to equipment with flanges or unions.

D. Keep open ends of pipe free from scale and dirt. Protect open ends with temporary plugs or caps.

3.3 INSTALLATION - BURIED PIPING SYSTEMS

A. Verify connection size, location, and inverts are as indicated on Drawings.

B. Establish elevations of buried piping with not less than two feet of cover.

C. Establish minimum separation of 6 inches from other services piping in accordance with International Building Construction Code.

D. Excavate pipe trench in accordance with Section 230502

E. Install pipe to as indicated on Drawings.

F. Place bedding material at trench bottom to provide uniform bedding for piping, level bedding materials in one continuous layer not exceeding 4 inches compacted depth; compact to 95 percent maximum density.

G. Install pipe on prepared bedding.

H. Route pipe in straight line.

I. Install pipe to allow for expansion and contraction without stressing pipe or joints.

J. Install bell and spigot pipe with bell end upstream.

K. Install trace wire continuous above pipe line.

L. Pipe Cover and Backfilling:
   1. Backfill trench in accordance with Section 220502.
   2. Maintain optimum moisture content of fill material to attain required compaction density.
   3. After hydrostatic test, evenly backfill entire trench width by hand placing backfill material and hand tamping in 4 inches compacted layers to 12 inches minimum cover over top of jacket. Compact to 95 percent maximum density.
   4. Evenly and continuously backfill remaining trench depth in uniform layers with backfill material.
   5. Do not use wheeled or tracked vehicles for tamping.

M. Extend cleanouts to finished floor or wall surface. Lubricate threaded cleanout plugs with mixture of graphite and linseed oil. Provide clearances at cleanout for snaking drainage system.

N. Encase exterior cleanouts in concrete flush with grade.

3.4 FIELD QUALITY CONTROL

A. Division 01: Field inspecting, testing, adjusting, and balancing.

B. Test sanitary waste and vent piping system in accordance with local authority having jurisdiction and as specified in this section.

3.5 TESTING

A. Test sanitary drainage system below grade by plugging lines and filling system with water to a static head of 10 feet of water. Observe water level for 24 hour period. If level is lowered indicating leakage, repair leaks and test again until no leakage is detected.

END OF SECTION

PROJECT MANUAL AND TECHNICAL SPECIFICATIONS

VOLUME 2

EL PASO INTERNATIONAL AIRPORT
CHECKED BAGGAGE INSPECTION SYSTEM (CBIS)

CITY OF EL PASO
MMA PROJECT NO. 1603

May 31, 2016

SET NO.

mijares • mora
ARCHITECTS INC.

111 N. FESTIVAL DRIVE EL PASO, TEXAS
915-542-1591 FAX-542-1594

PROJECT MANUAL AND TECHNICAL SPECIFICATIONS

EL PASO INTERNATIONAL AIRPORT
CHECKED BAGGAGE INSPECTION SYSTEM (CBIS)

CITY OF EL PASO

MMA PROJECT NO. 1603

May 31, 2016

ARCHITECT
MIJARES-MORA ARCHITECTS, INC.
111 N. Festival Drive
El Paso, Texas 79912
915.542.1591
Fax 915.542.1594

CIVIL ENGINEER
Quantum Engineering Consultants
414 Executive Center Boulevard
El Paso, Texas 79902
915-532-7272 – Fax 532-7373

STRUCTURAL ENGINEER
Zamora Engineering
7170 Westwind Dr. Suite 301
El Paso, Texas 79912
915-587-9775 – Fax 587-9785

ELECTRICAL ENGINEER
Alpha Engineering
1818 E. Rio Grande
El Paso, Texas 79902
(915) 838-9900 Fax – 838-9909

MECHANICAL ENGINEER
Alegro Engineering, Inc.
4150 Rio Bravo
El Paso, Texas 79902
915-533-0700 – Fax 533-2929

BAGGAGE HANDLING SYSTEM CONSULTANT
BNP Associates
1999 Broadway Suite 3390
Denver, Colorado 80202
720.374.4930

REGISTERED ARCHITECT
JORGE L. MORA
12526
STATE OF TEXAS

DATE 5·31·16

VOLUME II OF II
TECHNICAL SPECIFICATIONS TABLE OF CONTENTS

DIVISION 23 – HEATING, VENTILATING, & AIR-CONDITIONING (HVAC)

230500	COMMON WORK REQUIREMENTS FOR HVAC	16
230502	TRENCHING & BACKFILLING	2
230503	PIPES & TUBES FOR HVAC PIPING & EQUIPMENT	8
230513	COMMON MOTOR REQUIREMENTS FOR HVAC EQUIPMENT	3
230523	GENERAL DUTY VALVES FOR HVAC PIPING	6
230529	HANGERS & SUPPORTS FOR HVAC PIPING & EQUIPMENT	8
230548	VIBRATION & SEISMIC CONTROLS FOR HVAC PIPING & EQUIPMENT	9
230553	IDENTIFICATION FOR HVAC PIPING & EQUIPMENT	4
230593	TESTING, ADJUSTING, & BALANCING FOR HVAC	10
230700	HVAC INSULATION	11
230923	DIRECT DIGITAL CONTROL SYSTEM FOR HVAC	34
231123	FACILITY NATURAL GAS PIPING	10
232116	HYDRONIC PIPING SPECIALTIES	7
233100	HVAC DUCT AND CASINGS	7
233300	AIR DUCT ACCESSORIES	7
233400	HVAC FANS	5
233700	AIR OUTLETS AND INLETS	6
234000	HVAC AIR CLEANING DEVICES	3
237400	PACKAGED MAKE-UP AIR UNIT WITH HOT WATER HEATING COIL	5
237402	EVAPORATIVE COOLING UNIT	2
237413	PACKAGED OUTDOOR CENTRAL STATION AIR HANDLING UNITS	17

DIVISION 26 – ELECTRICAL

260500	COMMON WORK RESULTS FOR ELECTRICAL	7
260503	EQUIPMENT WIRING CONNECTIONS	4
260519	LOW-VOLTAGE ELECTRICAL POWER CONDUCTORS AND CABLES	4
260533	RACEWAY AND BOXES FOR ELECTRICAL SYSTEM	6

260534	OUTLET JUNCTION AND PULL BOXES……..	3
260923	LIGHTING CONTROL DEVICES OCCUPANCY SENSORS……	5
262213	LOW VOLTAGE DISTRIBUTION TRANSFORMERS……..	5
262313	DISCONNECT SWITCHES……..	3
262416	PANELBOARDS……	4
262726	WIRING DEVICES…….	5
265100	INTERIOR LIGHTING……...	2
265600	EXTERIOR LIGHTING…….	2
266270	EMERGENCY GENERATOR SET-NAT GAS…….	13
266280	EMERGENCY/STAND-BY SYSTEMS- TRANSFER SWITCHES……...	6

DIVISION 28 – ELECTRONIC SAFETY AND SECURITY

281600	INTRUSION ALARM SYSTEM……	8
283100	FIRE DETECTION AND ALARM……	5

DIVISION 31 – EARTHWORK

310510	SITE PREPARATION……	1
311100	SITE CLEARING……	3
312000	EXCAVATING……...	3
312213	SITE ROUGH GRADING….…….	4
312300	EXCAVATION AND FILL……	8
312313.13	BACKFILLING……...	3
312316.13	TRENCHING……..	5
312323	SOIL MATERIALS…….	3

DIVISION 32 – EARTHWORK

321123	CRUSHED AGGREGATE BASE COURSE …...…….	5
321216	ASPHALTIC CONCRETE PAVING……...……..	4
321218	BITUMINOUS PRE-TREATMENT & HMAC OVERLAY OR SEAL COAT……	15
321220	STORM SEWER PIPE INSTALLATION……..	4
321221	REINFORCED CONCRETE PIPE……	4
321313	CAST IN PLACE SITE CONCRETE……..……..	17
323113	TEMPORARY CHAIN LINK FENCES & GATES ……..…	4

DIVISION 33 – UTILITIES

330501	POLYVINYL CHLORIDE (PVC) PRESSURE PIPE FOR WATER MAINS……	4
330502	POLYVINYL CHLORIDE (PVC) FLEXIBLE PIPE FOR GRAVITY SEWER PIPE…….	3
331013	DISINFECTION AND TESTING……..	2
331216	VALVES AND FITTINGS…….	9
331613	UTILITY MISCELLANEOUS MATERIALS……...……	4
331615	UTILITY SITE WORK…...……	12
333913	SANITARY SEWER SYSTEM……..	8

DIVISION 34 – BAGGAGE HANDLING SYSTEM EQUIPMENT
TABLE OF CONTENTS BY BNP ASSOCIATES, INC.

END OF TABLE OF CONTENTS

SECTION 23 05 00 - COMMON WORK REQUIREMENTS FOR HVAC

PART I - GENERAL

1.1 SCOPE OF WORK

A See General Conditions and Supplementary Conditions.

B. The requirements listed under General Conditions and Supplementary Conditions and the General Requirements are applicable to this Section and all subsequent sections of this Division and form a part of the contract.

1.2 DEFINITIONS

A. General: Terms will have meanings as defined in Webster's Eleventh New Collegiate Dictionary except as noted below.

B. Actions:

1. Supply: Procure and deliver to the site with all features as specified, required per code, and as required for proper installation. Include submittals, O&M manuals, operator instructions, and warranty.
2. Install: Set in place in accordance with manufacturer's instructions, contract documents, and applicable codes and standards. Coordinate the installation with other disciplines, start, and demonstrate proper operation.
3. Furnish: Supply and install.
4. Provide: Supply and install.
5. Accepted: By the Owner's Representative except as noted.
6. Approved: By the Owner's Representative except as noted.
7. Review: By the Engineer except as noted.

C. Locations

1. Buried: Surrounded by soil or other material, either beneath the building or exterior to the building.
2. Exterior: Exposed to rain or snow. Examples include rooftop locations, spaces around cooling towers, pipe racks, etc.
3. Interior: Not exterior or buried. Examples include not only spaces within the heated envelope of the building, but also unheated attics, covered loading docks in which spaces are protected from rain and snow, utility tunnels, sheds, etc.
4. Finished Spaces: Interior spaces other than mechanical and electrical equipment rooms, furred spaces, pipe and duct chases, unheated attics, spaces above ceilings, crawlspaces, and tunnels.
5. Exposed: Exposed to view. Examples include finished spaces mechanical equipment rooms, rooftops, etc.
6. Concealed: Not Exposed.

D. Other Definitions:

1. 24/7: 24 Hr/day, 7 days per week, year-round.
2. AHJ: Authorities having jurisdiction. The authorities having jurisdiction over this project are established by statute, and include governmentally designated building departments, the fire marshal, fire departments, etc. No attempt is made to list all such entities here; a qualified Contractor is expected to know and coordinate with the various authorities having jurisdiction.
3. EMCS: Energy Management and Control System

4. Local: Based no further from the job site than the Engineer is. For example, where the specifications call for a local factory authorized service agent, then on a daily basis that agent must be based in an office or warehouse located no further from the project site than the Engineer's office.
5. OAE: Or approved equal.

1.3 CODES AND PERMITS

A. Perform all work in accordance with the 2009 International Building Code, the 2009 International Mechanical Code, 2009 International Gas Code, and the National Fire Protection Association (NFPA), current adopted edition, and 2009 International Energy Conservation Code. Provide all materials and labor necessary to comply with rules, regulations and ordinances. Where the drawings and/or specifications indicate materials or construction in excess of code requirements, the drawings and/or specifications shall govern. Contractor shall hold and save the Owner and his agents free and harmless from liability of any nature or kind arising from the Contractor's failure to comply with codes and ordinances.

B. Secure and pay for all permits necessary for performance of the work, including utility connections, extensions, meter pits and meter sets and tap fees for water, storm sewer, sanitary sewer and natural gas, unless otherwise specified herein.

C. Comply with the requirements of, and the recommendations of:
1. Applicable county and state mechanical, electrical, gas, plumbing, health and sanitary codes, laws and ordinances.
2. National Electrical Manufacturer's Association
3. National Electrical Code
4. Underwriters Laboratories
5. American National Standards Institute
6. American Society for Testing Materials
7. Local utility companies
8. National Fire Protection Association
9. ASME Boiler and Pressure Vessel Codes
10. Occupational Safety and Health Administration
11. International Mechanical and Plumbing Codes
12. International Fire Code
13. Sheet Metal and Air Conditioning Contractors' National Association (SMACNA)
14. American Society of Sanitary Engineering
15. American Gas Association

1.4 SUBMITTALS

A. Prior to purchasing materials, equipment and services, submit descriptive literature for review.

B. Procedures: See Division 1 and individual spec sections within this division for additional submission requirements. The following describes general submittal procedures. More specific procedures will be established after award.
1. Submittal Schedule: Along with the first item submitted for review, include a schedule listing all items to be submitted and an approximate date for each submittal. Submit this schedule in both hard copy and electronic form (Microsoft Excel). Normal review time for Alegro Engineering will be 10 working days independent of transmittal time. Schedule should identify any submittals for which expedited review

is requested. Update this schedule and resubmit it monthly (by e-mail) for information.

2. Include the following information with each submittal:
   a. Cover sheet identifying the project name, contractor, architect, engineer, and items included. Indicate symbol numbers, spec section, etc.
   b. A blank space large enough to accept a review stamp.
   c. Performance under the specified conditions.
   d. Cover sheet shall clearly identify and **HIGHLIGHT** any ways in which the submitted materials, equipment or services deviate from the Specifications.
3. Quantities:
   a. Brochures: Submit no more than seven copies plus a PDF.
   b. Drawings: Submit one reproducible, one print, plus a PDF.

4. Engineer will review one original submittal and one re-submittal for each item. If the Contractor fails to provide the required data or acceptable items with his second submittal, he will be charged for the Engineer's costs for the third and subsequent reviews.
5. Required Information: Submit information to allow the Engineer to easily determine whether the submitted components comply with the general design intent. Include relevant descriptions of materials, features, performance, quality and dimensions. Cross out all features, options and accessories which will not be provided. It is assumed that all specified, indicated and/or required features will be provided unless specifically noted otherwise.
6. Where specifications require a local factory authorized service agent, submit the name, address, and contact information for this agent. Include this information also in the O&M Manual.

D. Review of Submittals: Engineer will review submittals for general conformance with the design intent.

1. Review of a separate item as such will not indicate review of the assembly in which the item functions.
2. Review of submittals shall not relieve the Contractor of responsibility for any deviation from the requirements of the Contract Documents, nor for errors or omissions in the submittals; or for the accuracy of dimensions, the adequacy of connections, and the proper and acceptable fitting, execution, functioning and completion of the work.
3. Review will not relieve the Contractor of responsibility to comply with the contract requirements, or responsibility to ensure that equipment fits within the allotted space with required clearances for equipment operation, service and maintenance, including minimum clearances required by applicable codes, manufacturer's installation instructions and as necessary for proper clearance in front of all electrical panels as defined by the National Electric Code (NEC).
4. For commodity type items (plumbing fixtures, terminal units, registers, diffusers, etc), Engineer will review submittals for type only. Contractor to coordinate sizes and quantities.
5. Actions: Engineer will return submittals with one of the following actions:

NO EXCEPTIONS TAKEN Contractor may proceed with the work as

	submitted
EXCEPTIONS AS NOTED	Contractor may proceed with the work and without re-submittal provided he complies with all exceptions noted in the submittal, and so states in a letter
REVISE AND RESUBMIT	Resubmit in accordance with the indicated comments
REJECTED	Resubmit in accordance with the contract documents
RETURNED WITHOUT ACTION	This submittal has not been reviewed, and therefore the Engineer is returning it with no direction to the Contractor.

D. Substitutions:
1. Unauthorized Substitutions: If substitute materials, equipment or systems are installed without prior review or if any work is installed in a manner which is not in conformance with the requirements of this specification and for which the Contractor has not received written authorization, remove such unauthorized work and install work in accordance with the contract documents at no change in contract amount.
2. Authorized Substitutions: Provide all accessories and features as required and coordinate substitutions with other disciplines. Bear any extra expenses resulting from the use of substitutions which affect adjoining or related work required in this division or other divisions of the work.
3. If the Contractor substitutes equipment for that indicated on the drawings, he shall prepare a 1/4 inch = 1foot installation drawing for each equipment room where a substitution is made, using dimensions of substituted equipment, and including piping, and electrical equipment requirements, to verify that equipment will properly fit within the space with adequate clearance for maintenance and replacement. Submit this drawing for review.

E. Schedule: Submit all submittals in a timely manner consistent with the requirements for completing the work covered by this contract within the prescribed contract time. Be aware that there is risk in ordering components, fabricating work, and/or installing work prior to review. If the Contractor proceeds prior to review, and then the review comments required modifications to work which has begun or has been completed, then Contractor must comply with the review comments at no change in contract amount or schedule.

F. Shop Drawings:
1. Submit shop drawings for:
   a. Mechanical equipment rooms and other spaces housing air handling equipment, heat transfer equipment, fluid handling equipment, machinery, etc.
   b. Complete supply, return, and exhaust ductwork systems, both exposed and concealed.

c. Piping for HVAC, plumbing, and fire protection systems, both exposed and concealed.

2. Show the location and elevation of all equipment, ductwork and piping, as well as openings through slabs and walls. Include plans, elevations and sections as appropriate. Clearly show the manner in which the systems fit into the available space and relate to each other and to the building elements. Indicate required sleeves and openings in general construction elements. Indicate required clearances for operation, maintenance and replacement of operating devices and equipment. Drawings shall be of appropriate scale to facilitate coordination and understanding, but not smaller than 1/8 inch scale for floor plans and 1/4 inch scale for equipment rooms and chases.

3. Conflicts: The engineer has attempted to work out conflicts in the design, but it is inevitable that conflicts will exist in the design documents. Provide experienced designers to prepare shop drawings. Exercise good design practice in working out conflicts without compromising system operation or maintenance. Coordinate with other disciplines. Identify on the shop drawings those areas where redesign was necessary to resolve design conflicts.

   a. In the event that the Contractor desires direction in resolving a design conflict or desires prior approval of a recommended approach to resolving a conflict, submit an RFI which identifies the conflict and suggests a recommended solution.

   b. In resolving conflicts, gravity lines and larger distribution mains will generally have priority over pressurized lines and smaller lines as follows:

      - Plumbing waste and vent lines
      - Roof drains
      - Steam and condensate piping
      - Supply, return and exhaust ductwork
      - Fire sprinkler mains
      - Heating hot water and chilled water piping
      - Domestic hot and cold water
      - Fire sprinkler branch piping and sprinkler runouts
      - Miscellaneous special piping systems

4. Use of Engineer's CADD Files: The Engineer will provide the Contractor CADD files of the design documents if the Contractor completes and submits the release form attached at the end of this spec section.

G. Submittals Required under this Specification Section:

1. Electrical Components: Motors, Motor Controllers, and Variable Speed Drives
2. Identification: Products used to identify equipment, ductwork, valves, piping, and control devices.
3. General Construction Components: Roof Curbs & Access doors.

1.5 MISCELLANEOUS PROVISIONS

A. Qualifications

1. All mechanics shall be skilled in their respective trade.
2. All welders shall be certified in accordance with the ASME Boiler Test Code, Section IX, latest issue.

B. Regulated Materials: Comply with all state, local and federal regulations regarding the storage, handling or disposal of oils, lubricants, cleaning agents, refrigerants, other liquids and gases, and hazardous materials.

C. Factory Identification: Provide all materials and equipment with labels sufficient to show compliance with these specifications and the performance requirements indicated on the drawings. All equipment shall carry a permanent label installed by the manufacturer stating that the equipment complies with ASHRAE/IESNA Std. 90.1.

D. Hazardous Conditions: Protruding metal (bolts, steel angles, etc.) potentially hazardous to maintenance and operation personnel, shall be cut back and/or protected to reduce the risk of injury.

E. Hazard Signs

1. Provide a sign reading, "Hazardous Area - Authorized Personnel Only" on the doors to all equipment rooms, fan plenums, and similar areas containing moving or rotating parts, or other potentially hazardous environments.
2. Provide a sign reading, "Confined Space - Entry by authorized personnel only by permit" for all confined spaces. Confined spaces shall be as designated by OSHA Standard 191 0.146. This generally means a space that:
   a. Is large enough and so configured that an employee can bodily enter and perform assigned work; and
   b. Has limited or restricted means for entry or exit (for example, tanks, vessels, storage bins, hoppers, vaults, and pits are spaces that may have limited means of entry); and
   c. Is not designed for continuous employee occupancy.
3. Survey the final premises to determine where any potentially hazardous areas exist. If the Contractor feels that hazards exist which cannot be suitably provided for through the above typical methods, he shall forward in writing his concerns, and request for a decision concerning the referenced hazard, prior to the final inspection of the facilities.

1.6 GUARANTEE-WARRANTY

A. See Division 1 for additional information on warranties. Warranties shall run for one year from substantial completion unless indicated otherwise.

B. The following warranty shall be binding:

"The Contractor warrants that this installation is free from mechanical defects. Contractor agrees to replace or repair any part of the installation which may fail within a period of one year after the date established below, provided that such failure is due to defects in materials or workmanship, or to failure to follow the specifications and drawings. This warranty shall begin on the date set forth in the Certificate of Substantial Completion, AIA Form G704, or other such date as documented in writing by the Owner's Representative."

C. The extent of guarantees or warranties by equipment and/or materials manufacturers will not diminish the requirements of the Contractor's warranty to the Owner.

1.7 FEES AND PERMITS

A. The Contractor shall provide, procure, and pay for all permits, licenses, certificates, inspections, etc. required to carry and complete the work.

1.8 PERFORMANCE BOND AND LABOR AND MATERIAL PAYMENT BOND

A. In the event the Mechanical and Plumbing sub-contractors shall furnish bonds covering the faithful performance of the Contract and the payment of all obligations arising thereunder as

required in the Bidding Documents or in the Contract Documents. With the execution and delivery of the contract, Contractor shall furnish and pay for a Performance and a Payment Bond on the Owner's approved forms, each in the amount of the Contract Price, written by a Surety who meets the requirements in the Instructions to bidders. The Performance Bond shall cover the Contractor's one-year guarantee period as well as the actual construction work.

PART 2 - PRODUCTS

2.1 PRODUCT GENERAL REQUIREMENTS

A. General: Products supplied under Division 23 shall comply with the following except as noted elsewhere.

B. Products shall be new; shall be the product of manufacturers regularly engaged in the production of plumbing, heating, ventilating, air conditioning, and control system equipment; and shall be the manufacturer's latest design. Specs and equipment schedules establish expectations regarding standard of quality and operating intent.

C. Products shall be suitable for the conditions under which they are installed and operated. Prior to or during the submittal phase advise the Owner's representative and the Architect/Engineer in writing regarding any concerns about the suitability of the specified products for the intended application or service. Request clarification if any question exists regarding the design intent.

D. Performance Ratings: Unless otherwise noted, all scheduled equipment performance is based on an elevation of 4,000 feet above sea level. Adjust manufacturer's ratings accordingly.

E. Structural Soundness: Products shall have structural integrity appropriate to the component and its application. Bases shall be rigid and shall keep all components in proper alignment. Structural integrity shall be adequate for both rigging and final installation. Components shall not be loose, rattle, or vibrate unnecessarily in their final installed condition.

F. Corrosion Resistance: Equipment shall be of materials inherently corrosion resistant, or shall be finished with a corrosion-resistant finish suitable for the location in which the equipment is installed.

G. Touch-up: If the factory finish of any component is damaged prior to substantial completion, touch up to original condition per manufacturer's recommendations.

H. Equipment Access Doors or Panels: Provide access doors and panels within equipment to ensure good access to all components requiring inspection, service or maintenance. Provide appropriate hardware. Equipment installed outdoors shall be weather-tight.

I. Fans: Statically and dynamically balanced, shaft first critical speed shall be above operating speed at design conditions.

J. Bearings: Grease lubricated or permanently lubricated.

K. V-Belt Drives: All components sized for 150% of motor HP, multiple belts shall be matched, fixed sheaves for motors 20 Hp and larger, adjustable sheaves for lower HP motors, all safety components for OSHA compliance (e.g., belt guard or other safety provisions) motor mounted on adjustable base. Provide a replacement sheave for each fixed sheave after T&B is complete. Include belt data in O&M manual Gates Rubber Co, OAE.

1. Belt Guards: Rigidly constructed and attached, removable, galvanized steel, expanded mesh. Design to provide ready access to bearings.

L. Couplings: Provide coupling guard.

M. Motors and VFDs: See requirements described elsewhere in this spec section.

N. Drive Lines (starter or VFD, motor, coupling and shaft or v-belt drive and pulleys, and driven equipment): Coordinate with all suppliers and ensure all components are compatible to work as a system.

O. Coils: ARI rated, copper tubes mechanically expanded into aluminum fins, galvanized steel casing, drainable, pressure tested to 150% ofworking pressure but not less than 300 psi.

P. Coil Drain Pans: Provide for all heating and cooling coils, stainless steel, double pitched with piped outlet. For units with more than one coil stacked, provide intermediate drain pans piped to the main drain pan.

Q. Gas Burners: Natural gas fired, performance based on gas at 1000 Btu/SCF HHV but suitable for use with gas at 900 - 1050 Btu/SCF and 7 - II inches water column, factory installed and pressure tested gas train, all necessary safety and operating controls.

R. Filter Frames: Galvanized steel, provide wherever filters are specified.

S. Roof Curbs and Support Rails for Roof-Mounted Equipment: Roof curbs should generally be supplied with the equipment which the curb supports, and shall comply with the requirements of the National Roofing Contractors' Association. Match curb to the requirements of the supported equipment. The roof pitch is indicated on the architectural drawings. If roof pitch exceeds the recommendations of the equipment manufacturer, provide a curb that will level the equipment. Factory fabricated, minimum 18-inch, structurally adequate for the load supported, not less than welded 18-gauge (16-gauge or heavier for sizes more than 50-inches) galvanized steel with minimum I-inch fiberglass insulation, 2 x 2 wood nailer, and with cant and step if required to match specified roof. Provide damper tray for un-ducted fan applications. Ship small curbs fully assembled; large curbs may be knocked down for shipment.

T. Electrical & Controls: Except where specifically noted, electric service to each component listed on the equipment schedules will be through a single electrical feed at the voltage indicated on the equipment schedules. Include all components, cabling and conduits to distribute power to all components which are factory supplied and mounted. Provide transformer(s) if required to serve unit-mounted components requiring electric service at voltages different from the main electric service, including controls components. Provide secondary overcurrent protection. Provide terminal strips for field-installed control wiring. Provide unit-mounted, unit-specific wiring diagrams on durable paper, attached to inside of control panel door or otherwise affixed to the unit. All electrical components shall be UL Listed or Recognized. All factory-installed electrical work shall comply with the NEC unless the overall unit is listed by an organization acceptable to the AHJ, and listed to a standard acceptable to the AHJ.

1. Where equipment includes an LCD or other, similar display for operator Interface, display all information in English. Displays should be readily understandable and should not require the user to look up display codes in a reference manual.
2. Provide battery backup to retain all memory and programming, and to keep all clock related functions powered through a 1-week power outage.
3. Controls interface with the EMS:
    a. Digital Inputs to FMS: 24V DC sourced from equipment.
    b. Digital Outputs from FMS: Equipment to have form C relays, max 250V DC, 2 A.
    c. Analog Inputs to FMS: 4-20 mA, 0-5V DC, or O-IOV DC sourced from equipment.
    d. Analog Outputs from FMS: 4-20 mA sourced from FMS.

U. All products specified under this Division shall be manufactured in the United States.

2.2 ELECTRICAL COMPONENTS

A. General: Except as noted, all electrical products and equipment shall comply with the requirements of this section, whether field installed or factory installed. See "Product General Requirements" and "Installation General Requirements" in Parts 2 & 3 of this spec section for additional requirements.

B. Motors

1. General: Except as noted motors shall be horizontal, open drip-proof, 4-pole, 1750 RPM, rated per NEMA MG-I, with fabricated steel or cast iron casing, motor terminal box adequately sized for conductors one-size larger than specified, SS nameplate per NEMA MG-I-20.60, connection diagram attached to motor, compression lugs for power feeds and ground conductor, grease lubricated sealed ball bearings or roller bearings with standard grease fitting zerk and relief tapping, factory lubricated, dynamically balanced to no more than 50% of the NEMA allowable vibration limits. For motors powering V-belt drives, provide a cast iron or steel base with slide rail and adjustable belt tension device. Install motors and equipment on foundations and align as required. 40 deg C rise and total temperature rise of 65 deg C ambient.
   a. 3/4 hp and smaller: 115V, single phase, 60 Hz, split phase or permanent split capacitor (PSC), NEMA Type N or 0, with built-in thermal overload protection.
      1) Multi-speed motors.
   b. 1 hp and greater: 208 V, 3 phase, 60 Hz, squirrel cage induction type, NEMA design B, T-frame, with Class B or F insulation, lifting lugs, 150,000 hr L-10 bearings for direct-coupled applications, 50,000 hr L-10 bearings for belt-driven application with radial loads and pulley sizes per NEMA MGI-14.43. Service Factor: ODP motors shall be rated for 1.15 SF at 40'C or 1.0 SF at 65 degrees C; TEFC motors shall be 1.0 SF.
      1) Two speed motors: Provide with two separate windings.
      2) Variable speed motors: Drive compatible per NEMA MGI-31, premium efficiency as specified below regardless of Hp, Class F insulation, minimum 5-year warranty.
2. Efficiency: Motors shall be premium efficiency type, with nominal efficiencies not less than the following as per the Consortium on Energy Efficiency (CEE), and minimum power factor of 0.85:

	Open Drip-Proof (ODP)			Totally Enclosed Fan-Cooled (TEFC)		
HP	1200 RPM	1800 RPM	3600 RPM	1200 RPM	1800 RPM	3600 RPM
1	82.5	85.5	80.0	82.5	85.5	78.5
1.5	86.5	86.5	85.5	87.5	86.5	85.5
2	87.5	86.5	86.5	88.5	86.5	86.5
3	89.5	89.5	86.5	89.5	89.5	88.5
5	89.5	89.5	89.5	89.5	89.5	89.5
7.5	91.7	91.0	89.5	91.7	91.7	91.0
10	91.7	91.7	90.2	91.7	91.7	91.7
15	92.4	93.0	91.0	92.4	92.4	91.7
20	92.4	93.0	92.4	92.4	93.0	92.4
25	93.0	93.6	93.0	93.0	93.6	93.0
30	93.6	94.1	93.0	93.6	93.6	93.0
40	94.1	94.1	93.0	94.1	94.1	93.6

50	94.1	94.5	93.6	94.1	94.5	94.1
60	95.0	95.0	94.1	94.5	95.0	94.1
75	95.0	95.0	94.5	95.0	95.4	94.5
100	95.0	95.4	94.5	95.4	95.4	95.0
125	95.4	95.4	95.0	95.4	95.4	95.4
150	95.8	95.8	95.4	95.8	95.8	95.4
200	95.4	95.8	95.4	95.8	96.2	95.8

3. Approved Manufacturers: General Electric Energy Saver, Baldor Super-E, Marathon Series E, Reliance Electric XE, Westinghouse TEE 11, Eaton/Cutler Hammer, Toshiba, Louis Allis, or approved equal.
4. If the Contractor proposes to furnish motors varying in horsepower and/or characteristics from those specified, he shall first submit his request for the change and shall then coordinate the change with all other parties (e.g. electrical contractor) and pay any costs associated with the change.

C. Motor Controllers

1. Single Phase Manual Starters to 1 Hp and 120-277 V: Cutler Hammer MS with indicating light.
2. 3-Phase: Full voltage, non-reversing, electro-mechanical, combination circuit breaker and motor controller, UL Listed, NEMA rated, 460V, 65,000 AIC, minimum 50 VA 24V controls transformer with secondary overcurrent protection, suitable for operation at -4 degrees F to +149'F and specified voltage -15% to + 10%, adjustable solid state overloads initially set at Class 10, HOA switch, run indicator, two auxiliary contacts for remote monitoring of status, and enclosure for surface mounting. Cutler Hammer OAE.
   a. Provide enclosure appropriate to the location:
      1) NEMA-1 for indoor dry locations.
      2) NEMA-3R for outdoors.
      3) NEMA-4 for wet applications.
      4) NEMA-12 for dusty locations.
      5) Explosion-proof- where required.

   b. Motor controllers factory mounted and wired on AC units, boilers, etc, may be definite purpose, and need not have all the features specified here.

2.3 ELECTRICAL WIRING AND CONTROL EQUIPMENT

A. Provide wiring and conduit as specified Division 26.
B. Coordinate with all disciplines to ensure that all necessary components of power and control work are included and fully understood.

2.4 GENERAL CONSTRUCTION COMPONENTS

A. Equipment Support Rails

1. Equipment Support Rails: Nominal 2" x 4" wood nailer. Thycurb TEMS, Greenheck, RPS,OAE.

B. Access Doors (ADs)

1. Steel frame and door, surface mounted, factory primed, ISO" opening, flush, screw-driver operated cam lock, minimum 24" x 24" except as approved, but larger where required for proper access. Where ADs are installed in general construction with a pattern, match AD dimensions to this pattern. Milcor, Krueger, OAE.

   a. Gypsum Wall or Ceiling: With drywall bead on frame, Milcor Style DW.
   b. Plaster Wall or Ceiling: Milcor Style K.
   c. Masonry Walls: Milcor Style M.
   d. l-hr and 2-hr rated walls: UL Listed for 1.5-hr Class B Fire Rating, self-closing and self-latching. Milcor Style UFR.

C. Painting: Finish painting of mechanical systems and equipment will be under Division 09, "Painting," unless equipment is specified to be provided with factory-applied finish coats.

2.5 MISCELLANEOUS PROVISIONS

A. Flow Diagrams: Provide half-size prints of each system flow diagram, including air handling, steam, chilled water, heating water, domestic water, domestic HW, etc. Mount framed under plexiglass, and locate either on the associated AHU or on a nearby wall. Incorporate any as-built revisions.

PART 3 - EXECUTION

3.1 INSTALLATION GENERAL REQUIRMENTS

A. Cooperation with Other Trades: Refer to other parts of these Specifications covering the work of other trades which must be carried on in conjunction with the mechanical work so that the construction operations can proceed without harm to the Owner from interference, delay, or absence of coordination. Contractor shall be responsible for the size and location of all openings, foundations, etc.
B. Trenching and Backfilling: Provide all excavation, trenching and backfilling required for the installation of the work of this division.
C. Manufacturer's Instructions: Install all products in accordance with manufacturers' recommendations and the requirements of any applicable listings. If manufacturers' recommendations and/or requirements of applicable listings conflict with plans and specifications, report such conflicts to the Owner's Representative.
D. Field Measurements: Verify all dimensions and conditions governing the work. Examine adjoining work on which the work of this Division is dependent, and report any deficiencies.
E. Do not compromise the building structural, fire resistant construction or vapor barrier system.
F. Supports for Equipment and Systems: Foundations and structural supports for equipment will generally be provided by others. The contractor for this division shall provide supplementary supports as required to support equipment, distribution systems, and other components installed under this division. Prior to installing mechanical work, examine foundations and supports to ensure they are adequate to properly support the equipment. Provide all necessary foundations, structures, supports, inserts, sleeves, etc, for installation of mechanical and plumbing equipment, ductwork and piping, etc. Coordinate installation of such devices with

all disciplines. Verify that the devices and supports are adequate as intended and do not overload the building structure.

G. Concealed or Buried Work: For work which is underground or which will be concealed by building construction, provide digital photographs to document the installation throughout the construction project, but not less than weekly. Include plans indicating where the photographs were taken. Notify the EOR of when the work will be complete and provide EOR a minimum five-day period to inspect the work after completion but prior to when it is backfilled or concealed by building construction.

H. Access Doors: Provide as required for access to valves, dampers, controls, or other items for which access is required for either operation or servicing. The type of access door shall be as required by the room finish schedule.

I. Alignment of Flexible Couplings: Flexible couplings between motors and driven equipment shall be aligned by a qualified service technician after the equipment is installed and ready for operation. Align equipment per manufacturer's recommendations under operating conditions and temperature. Provide written certification that each device has been so aligned.

J. Lubrication: Provide all oil for the operation of all equipment until acceptance. Contractor shall be responsible for all damage to bearings while the equipment is being operated by Contractor up to the date of acceptance of the equipment. Protect all bearings and shafts during installation and thoroughly grease shafts to prevent corrosion. Bearings for items of mechanical equipment shall be marked at each bearing location as to whether the bearing is a sealed type or re-lubricable type unit.

K. Tests: All tests shall be conducted in the presence of the designated and authorized Owner's Representative. Notify the Owner's Representative one week in advance of all tests. Requirements for testing are specified under the sections covering the various systems. Provide all necessary equipment, materials, and labor to perform the required tests.

L. Protection of Material and Equipment:

1. Protect all work, materials and equipment furnished and installed under Division 23, whether incorporated in the building or not.
2. All items of mechanical equipment shall be stored in a protected weatherproof enclosure prior to installation within the building, or shall be otherwise protected from the weather in a suitable manner as approved.
3. Protect all work and be responsible for all damage done to property, equipment and materials. Coordinate material storage with the Owner's Representative.
4. Pipe and duct openings shall be closed with caps or plugs, or covered to prevent lodgment of dirt or trash during the course of installation. Plumbing fixtures shall not be used by the construction forces. At the completion of the work clean and polish fixtures, equipment and materials prior to turning them over to the Owner.

3.2 DRAWINGS

A. The drawings show the general arrangement of the piping, ductwork, equipment, etc., and shall be followed as closely as actual building construction and work of other trades will permit. Where discrepancies occur between Plans and Specifications, the more stringent shall govern. All Contract Documents shall be considered as part of the work. Because of the small scale of the drawings, it is not possible to indicate all offsets, fittings and accessories, which may be required. Investigate the structural and finish conditions affecting the work and arrange the work accordingly, providing fittings, valves, and accessories as required to meet such conditions. Show any such changes on the Record Drawings.

B. Should any doubt or question arise in respect to the true meaning of the drawings or specifications, submit an RFI to the architect.
C. Install equipment, piping, ductwork, and electrical systems with proper clearance for operation, service, and maintenance, including minimum clearances required by applicable codes, manufacturer's installation instructions, etc. Include proper clearance in front of and above electrical equipment as defined by the National Electric Code (NEC). Piping and ductwork systems shall not be routed through or above electrical equipment rooms, telecommunications rooms, elevator machine rooms, or electrical equipment spaces within mechanical equipment rooms.
D. Arrange all concealed mechanical systems carefully to fit within the available space without interference with adjacent structural and electrical systems. Make all necessary provisions for penetrations of piping and ductwork, including sleeves and block outs in structural systems. The exact location of all exposed mechanical systems, including grilles, registers, and diffusers; access doors; sprinkler heads; piping and ductwork exposed within finished areas; and other equipment and devices as applicable, shall be coordinated with the Architect, who shall have final authority for the acceptance of the work as it relates to the aesthetic design for the facility.

1.3 EQUIPMENT SUPPLIED BY OTHERS

A. Certain items of mechanical equipment as listed on the Drawings and/or Specifications will be furnished under other sections of this Specification for mechanical rough-in and connection under Division 23, including plumbing, domestic water and waste, process cooling water, compressed air, exhaust, etc. All required mechanical services, including connection of such services to equipment shall be provided under Division 23.

3.4 CONCRETE BASES AND HOUSEKEEPING PADS

A. Concrete bases and housekeeping pads shall be installed under all pieces of mechanical equipment unless specifically deleted by the Specifications or Drawings.
B. Contractor shall be responsible for the accurate dimensions of all pads and bases and furnish and install all vibration isolators, anchor bolts, etc.
C. Provide concrete housekeeping pad foundations for all floor mounted equipment installed under this section unless otherwise shown on the Drawings. All concrete bases and housekeeping pads shall conform to the requirements specified under Division 3, Concrete, portions of these Specifications. Pad foundations shall be 4 inches high minimum, unless otherwise indicated on the Drawings. Chamfer edges shall be 1 inch. Faces shall be free of voids and rubbed smooth with carborundum block after stripping forms. Tops shall be level. Provide dowel rods in floor for lateral stability and anchorage.
D. Equipment anchor bolts shall be set in a galvanized pipe or sheet metal sleeves 1 inch larger than bolt diameter. Anchor bolts shall be high strength steel J-shape. Anchor bolt design shall be arranged and paid for by the Contractor.
E. Machinery bases, bed plates, sole plates, or vibration isolation units shall be carefully aligned, shimmed, leveled, and then grouted in place with commercial non-shrink grout, When a flexible coupling is employed as a part of the drive train, the coupling shall be aligned before the machinery base is grouted.

3.5 PRESSURE RELIEF DEVICES

A. Refrigerant pressure relief devices and fusible plugs shall be installed with piping to a safe location in accordance with ANSI/ASHRAE Standard 15. Discharge shall be to atmosphere at a location not less than 15 feet above the adjoining ground level and not less than 20 feet from any window, ventilation opening, or exit from any building. Discharge line sizing shall conform to ANSI/ASHRAE Standard 15-1994.
B. Each discharge pipe shall be equipped with a drip leg capable of holding 1 gallon of liquid. The drip leg shall include a manual drain valve.

3.6 INSTALLATION CHECK

A. An experienced, competent, and authorized representative of the equipment listed below shall visit the site of the work and inspect, check, adjust if necessary, and approve the installation for the equipment listed below. The equipment supplier's representative shall revisit the job site as often as necessary until all trouble is corrected and the equipment installation and operation is approved and accepted.
B. Each equipment supplier's representative shall furnish a written report certifying that the equipment (1) has been properly installed and lubricated; (2) is in accurate alignment; (3) is free from any undue stress imposed by connecting piping or anchor bolts; and, (4) has been operated under full load conditions and that it has operated satisfactorily.
C. Equipment requiring installation check includes the following:
- Chillers
- Pumps
- Boilers
- Water Softener
- Domestic Hot Water Heaters
- Water Treatment Systems (Cooling Tower and Boilers)
- Pressure Reducing Stations
- Sump Pump and Sewage Ejector Systems
- Fire Pump Systems
- Domestic Water Booster Pump Systems
- Air Handling Units
- Fans
- Energy Management System

3.7 OPERATION PRIOR TO ACCEPTANCE OF EACH PHASE

A. Operation of equipment and systems for the benefit of the Owner prior to completion of each phase will be allowed provided that a written agreement between the Owner and the Contractor has established warranty and other responsibilities to the satisfaction of both parties.
B. Operation of equipment and systems for the benefit of the Contractor, except for the purposes of testing and balancing, will not be permitted without a written agreement between the Owner and the Contractor establishing warranty and other responsibilities.

3.8 OPERATION AND MAINTENANCE (O&M) INSTRUCTIONS

A. At completion of the project provide two complete bound sets of the following documents, along with two CDs containing searchable PDFs of these documents. Organize bound information in a logical fashion with a table of contents and tabs for the different sections. Organize PDFs in a logical fashion with bookmarks to assist the operating personnel in

retrieving desired data. Provide minimum two 1-hour sessions to instruct Owner's facility personnel in how to find information in the bound O&Ms and the PDFs. Take attendance and submit the attendance list to the Owner's Representative. Include the following:

1. Approved Submittals.
2. Test reports.
3. O&M manuals and instructions covering all equipment supplied under this Division, with all non-applicable information crossed out. Clearly identify all required routine maintenance. Include parts lists.
4. A master Lubrication Chart listing each piece of equipment, the recommended oil or grease, and the recommended frequency of lubrication.
5. The names and addresses of at least one service agency capable of providing required maintenance for each item of equipment supplied.
6. Complete temperature control diagrams including control descriptions, system sequence of operation, operating instructions, control system maintenance and calibration information, wiring diagrams, and all control setpoints. See Section 23 0900 for additional requirements.

B. See Division 1 for additional requirements concerning manuals, manual distribution, and maintenance materials.
C. Submit O&M manuals to the architect for review and distribution to the Owner not less than two weeks prior to the date scheduled for O&M instructions as specified.
D. Demonstrate proper system operation to the owner's operating staff. Provide the services of the contractor and subcontractors (e.g., mechanical, T&B, temperature control, etc), as required to properly demonstrate system operation.
E. Provide the necessary skilled labor and helpers to operate the mechanical systems and equipment for a period of 7 days of eight hours each. During this period, instruct the owner's facility staff fully in the operations, adjustment and maintenance of all equipment provided. Provide at least two weeks advanced notice, with a written schedule of each training session, the subject of the session, the Contractors' Representatives who plan to attend the session, and the time for each session. Take attendance and submit attendance sheets to the Owner's Representative.

3.9 RECORD DRAWINGS

A. See Division 1, for additional requirements associated with Project Record Drawings.
B. Maintain a full-size set of marked-up prints showing the installed location and arrangement of all work under this division, and in particular where changes were made during construction. Keep record drawings accurate and up-to-date throughout the construction period. Owner's Agents may request to review record drawings during construction and in conjunction with review and approval of monthly pay requests. Include copies of all addenda, RFIs, bulletins, and change orders neatly taped or attached to record drawing set. At the completion of the project send the Architect full-size plans clearly showing all changes from the original design marked up in red so as to facilitate the Architect/Engineer incorporating these changes into the Engineer's CADD files. Forward record drawings to the Owner's Representative prior to submitting a request for substantial completion.

3.10 SITE VISITS AND OBSERVATION OF CONSTRUCTION

A. The Architect/Engineer may make periodic visits to the project site at various stages of construction in order to observe the progress and quality of various aspects of the work so as

to determine if such work is proceeding in general accordance with the Contract Documents. This observation will not release the Contractor from his responsibility to supervise, direct, and control all construction work and activities. The Architect/Engineer has no authority over, or responsibility for means, methods, techniques, sequences, or procedures of construction or for safety precautions and programs, or for failure of the Contractor to comply with applicable laws, regulations, or codes.

B. Prior to substantial completion, request that the Engineer provide a final observation visit. Complete the attached "Final Observation Checklist," and include it with this request. For any items that are not applicable, mark them "N/A."

3.11 PROJECT CLOSEOUT

A. Submit written certification that all work complies with the specifications and applicable codes. Submit certifications and acceptance certificates including proof of delivery of record drawings, O&M manuals, spare parts required, and equipment warranties.

END OF SECTION

SECTION 23 05 02 - TRENCHING AND BACKFILLING

PART 1- GENERAL

1.1 REQUIREMENTS

A. Conform with applicable provisions of the General Conditions, Supplementary Conditions and the General Requirements.

1.2 SCOPE OF WORK

A. The work in this section includes the furnishing of all labor, materials, equipment, transportation, hauling and services required in connection with the excavation, backfilling, compaction, grading and removal of earth from the site required for the installation of the HVAC work specified herein under Division 23.

B. Provide the services of a qualified underground locator to field locate and mark all existing buried utility lines, public and private, piping, conduits, etc., within the required construction area prior to the start of any trenching or excavation work.

1.3 SAFETY REGULATIONS

A. All work performed under this Section shall conform to the requirements of the General Conditions, Supplementary Conditions and Safety Requirements for this type of work.

PART 2 - PRODUCTS

Not Applicable.

PART 3 - EXECUTION

3.1 TRENCHING AND BACKFILLING

A. General Excavation: The Contractor shall perform all excavation of every description and of whatever substances encountered, to the depths indicated on the drawings or as otherwise specified. During excavation, material suitable for backfilling shall be piled in an orderly manner a sufficient distance from the banks of the trench to avoid overloading and to prevent slides or cave-ins. All excavated material not required or suitable for backfill shall be removed and wasted. Berming and grading shall be done as may be necessary to prevent surface water from flowing into trenches or other excavations, and any water accumulating therein shall be removed by pumping or by other approved methods. Sheeting and shoring shall be done as required for the protection of the work and for the safety of personnel.

B. Trench Excavation: Trenches shall be of adequate width for the proper laying of the pipe, and the banks shall be as nearly vertical as practicable and safe for workmen. The bottom of the trenches shall be accurately graded and bedded to provide uniform bearing and support for each section pipe at every point along its entire length. Bell holes and depressions for joints shall be dug after the trench bottom has been graded, and bedded in order that the pipe rests upon the prepared bottom for as nearly its full length as practicable. Care shall be taken not to excavate below the depths indicated. Where rock excavation is required, the rock shall be excavated to a minimum overdepth of 4 inches below the trench depths indicated on the drawings or specified. Overdepths in the rock and common excavation shall be backfilled with coarse sand, fine gravel, or otherwise

suitable material. Whenever wet or otherwise unstable soil that is incapable of properly supporting the pipe is encountered in the bottom of the trench, such soil shall be removed to the depth required and the trench backfilled to the proper grade with coarse sand, fine gravel, or other suitable materials, as hereinafter specified.

C. The Contractor shall move trucks and equipment on prescribed roads and keep the roads free from mud, dirt and spillage.

D. If additional material is needed for fill on the project, it shall be furnished by the Contractor.

E. Bracing and Bulkheading: In all excavation work the Contractor shall provide necessary underpinning, bracing, or bulkheading to safeguard the work, the present structures, workmen, the public, and the property, and shall assume all responsibility in connection therewith.

F. Backfilling: The trenches shall not be backfilled until all required pressure tests are performed and until the utilities as installed conform to the requirements specified. The trenches shall be carefully backfilled with materials approved for backfilling; free from large clods of earth or stones. The entire depth of trench shall be backfilled in layers, and each layer shall be spread evenly, wetted to optimum moisture and thoroughly mixed to uniform consistency and compacted to the required maximum density obtainable as the same soil, as determined by ASTM D698.

G. All imported fill required under this section will be furnished by the Contractor. Imported fill will be base course material approved for use by the State Highway Department.

H. Fill material shall be free from trash, lumber or any type of debris which may be detrimental to producing the required density in the fill.

I. The earth beneath all sidewalks and concrete slabs shall be backfilled and compacted to at least 8" below any gravel or sub-base material before the placement of gravel or other base material and shall be coordinated with requirements contained within Division 2.

J. Piping below roadways or service drives buried at a depth of less than [48"] shall be protected with a reinforced concrete slab above the piping, either at grade or below the final grade as directed by the Architect.

K. All piping not encased in concrete shall be bedded in sand or fine gravel, without rocks or other foreign material. Bedding material shall be placed around the pipe in accordance with manufacturer's recommendations. The bedding material shall be distributed around pipe to assure full consolidation.

L. In grass and planted areas, the Contractor shall backfill his excavation to approximately 8" below finished grade. Contractor shall coordinate backfill requirements contained in Division 2.

M. The Contractor shall protect from damage all existing underground indicated on the Contract Drawings or field located by underground utility locator service prior to excavation operations. Any damage to such existing utilities shall be repaired by the Contractor without additional costs to the Owner.

N. Provide density test for trench, backfill in accordance with Division 2 requirements.

END OF SECTION

SECTION 23 05 03 - PIPES AND TUBES FOR HVAC PIPING AND EQUIPMENT

PART 1 GENERAL

1.1 SUMMARY

A. Section Includes: Pipe and pipe fittings for the following systems:
   1. Equipment drains and over flows.
   2. Natural gas piping.
   3. Unions and flanges.
   4. Underground pipe markers.

B. Related Sections:
   1. Section 07 84 00 - Firestopping: Product requirements for firestopping for placement by this section.
   2. Division 08 - Access Doors and Frames: Product requirements for access doors for placement by this section.
   3. Division 09 - Painting and Coating: Product and execution requirements for painting specified by this section.
   4. Section 23 05 16 - Expansion Fittings and Loops for HVAC Piping Piping Expansion Compensation: Product requirements for piping expansion compensation devices for placement by this section.
   5. Section 23 05 23 - General-Duty Valves for HVAC Piping: Product requirements for valves for placement by this section.
   6. Section 23 05 48 - Vibration and Seismic Controls for HVAC Piping and Equipment: Product requirements for vibration isolation for placement by this section.
   7. Section 23 07 00 - HVAC Insulation: Product requirements for piping insulation for placement by this section.
   8. Section 23 21 16 - Hydronic Piping Specialties: Product requirements for hydronic piping specialties for placement by this section.
   9. Division 31 - Aggregates for Earthwork: Aggregate for backfill in trenches.
   10. Division 31 - Excavation: Product and execution requirements for excavation and backfill required by this section.
   11. Division 31 - Trenching: Execution requirements for trenching for underground piping systems.
   12. Division 31 - Fill: Execution requirements for backfilling required by this section.
   13. Section 33 51 00 - Natural-Gas Distribution: Product and execution requirements for site natural gas distribution systems.
   14. Section 33 61 00 - Hydronic Energy Distribution: Factory insulated piping for use with hydronic distribution systems in below ground applications.

1.2 REFERENCES

A. American Society of Mechanical Engineers:
   1. ASME B16.3 - Malleable Iron Threaded Fittings.
   2. ASME B16.4 - Gray Iron Threaded Fittings.
   3. ASME B16.18 - Cast Copper Alloy Solder Joint Pressure Fittings.
   4. ASME B16.22 - Wrought Copper and Copper Alloy Solder Joint Pressure Fittings.
   5. ASME B16.26 - Cast Copper Alloy Fittings for Flared Copper Tubes.
   6. ASME B31.1 - Power Piping.

7. ASME B31.9 - Building Services Piping.
8. ASME B36.10M - Welded and Seamless Wrought Steel Pipe.
9. ASME Section IX - Boiler and Pressure Vessel Code - Welding and Brazing Qualifications.

B. ASTM International:
1. ASTM A53/A53M - Standard Specification for Pipe, Steel, Black and Hot-Dipped, Zinc-Coated, Welded and Seamless.
2. ASTM A234/A234M - Standard Specification for Piping Fittings of Wrought Carbon Steel and Alloy Steel for Moderate and High Temperature Service.
3. ASTM A395/A395M - Standard Specification for Ferritic Ductile Iron Pressure-Retaining Castings for Use at Elevated Temperatures.
4. ASTM A536 - Standard Specification for Ductile Iron Castings.
5. ASTM B32 - Standard Specification for Solder Metal.
6. ASTM B68 - Standard Specification for Seamless Copper Tube, Bright Annealed.
7. ASTM B75 - Standard Specification for Seamless Copper Tube.
8. ASTM B88 - Standard Specification for Seamless Copper Water Tube.
9. ASTM B280 - Standard Specification for Seamless Copper Tube for Air Conditioning and Refrigeration Field Service.
10. ASTM B584 - Standard Specification for Copper Alloy Sand Castings for General Applications.
11. ASTM D1785 - Standard Specification for Poly (Vinyl Chloride) (PVC) Plastic Pipe, Schedules 40, 80, and 120.
12. ASTM D2235 - Standard Specification for Solvent Cement for Acrylonitrile-Butadiene-Styrene (ABS) Plastic Pipe and Fittings.
13. ASTM D2241 - Standard Specification for Polyethylene (PE) Plastic Pipe (SIDR-PR) Based on Controlled Inside Diameter.
14. ASTM D2310 - Standard Classification for Machine-Made "Fiberglass" (Glass-Fiber-Reinforced Thermosetting-Resin) Pipe.
15. ASTM D2464 - Standard Specification for Threaded Poly (Vinyl Chloride) (PVC) Plastic Pipe Fittings, Schedule 80.
16. ASTM D2466 - Standard Specification for Poly (Vinyl Chloride) (PVC) Plastic Pipe Fittings, Schedule 40.
17. ASTM D2467 - Standard Specification for Poly (Vinyl Chloride) (PVC) Plastic Pipe Fittings, Schedule 80.
18. ASTM D2564 - Standard Specification for Solvent Cements for Poly (Vinyl Chloride) (PVC) Plastic Piping Systems.
19. ASTM D2661 - Standard Specification for Acrylonitrile-Butadiene-Styrene (ABS) Schedule 40 Plastic Drain, Waste, and Vent Pipe and Fittings.
20. ASTM D2751 - Standard Specification for Acrylonitrile-Butadiene-Styrene (ABS) Sewer Pipe and Fittings.
21. ASTM D2846/D2846M - Standard Specification for Chlorinated Poly (Vinyl Chloride) (CPVC) Plastic Hot- and Cold-Water Distribution Systems.
22. ASTM D2855 - Standard Practice for Making Solvent-Cemented Joints with Poly (Vinyl Chloride) (PVC) Pipe and Fittings.
23. ASTM D2996 - Standard Specification for Filament-Wound Fiberglass (Glass-Fiber-Reinforced Thermosetting Resin) Pipe.
24. ASTM F437 - Standard Specification for Threaded Chlorinated Poly (Vinyl Chloride) (CPVC) Plastic Pipe Fittings, Schedule 80.
25. ASTM F438 - Standard Specification for Socket-Type Chlorinated Poly (Vinyl Chloride) (CPVC) Plastic Pipe Fittings, Schedule 40.

26. ASTM F439 - Standard Specification for Socket-Type Chlorinated Poly (Vinyl Chloride) (CPVC) Plastic Pipe Fittings, Schedule 80.
27. ASTM F441/F441M - Standard Specification for Chlorinated Poly (Vinyl Chloride) (CPVC) Plastic Pipe, Schedules 40 and 80.
28. ASTM F493 - Standard Specification for Solvent Cements for Chlorinated Poly (Vinyl Chloride) (CPVC) Plastic Pipe and Fittings.
29. ASTM F876 - Standard Specification for Crosslinked Polyethylene (PEX) Tubing.
30. ASTM F877 - Standard Specification for Crosslinked Polyethylene (PEX) Plastic Hot- and Cold-Water Distribution Systems.
31. ASTM F1476 - Standard Specification for Performance of Gasketed Mechanical Couplings for Use in Piping Applications.

C. American Welding Society:
1. AWS A5.8 - Specification for Filler Metals for Brazing and Braze Welding.
2. AWS D1.1 - Structural Welding Code - Steel.

D. American Water Works Association:
1. AWWA C105 - American National Standard for Polyethylene Encasement for Ductile-Iron Pipe Systems.
2. AWWA C110 - American National Standard for Ductile-Iron and Grey-Iron Fittings, 3 in. through 48 in. (75 mm through 1200 mm), for Water and Other Liquids.
3. AWWA C111 - American National Standard for Rubber-Gasket Joints for Ductile-Iron Pressure Pipe and Fittings.
4. AWWA C151 - American National Standard for Ductile-Iron Pipe, Centrifugally Cast, for Water.

E. National Fire Protection Association:
1. NFPA 30 - Flammable and Combustible Liquids Code.
2. NFPA 31 - Standard for the Installation of Oil-Burning Equipment.
3. NFPA 54 - National Fuel Gas Code.
4. NFPA 58 - Liquefied Petroleum Gas Code.

1.3 SUBMITTALS

A. Section 01 33 00 - Submittal Procedures: Submittal procedures.

B. Shop Drawings: Indicate layout of piping systems, including equipment, critical dimensions, and sizes.

C. Product Data: Submit data on pipe materials and fittings. Submit manufacturers catalog information.

D. Welders' Certificate: Include welders' certification of compliance with ASME Section IX.

1.4 QUALITY ASSURANCE

A. Perform Work in accordance with ASME B31.1 and ASME B31.9 code for installation of piping systems and ASME Section IX for welding materials and procedures.

1.5 QUALIFICATIONS

A. Manufacturer: Company specializing in manufacturing Products specified in this section with minimum five years documented experience.

B. Installer: Company specializing in performing work of this section with minimum five years documented experience in projects similar in size and scope.

1.6 PRE-INSTALLATION MEETINGS

A. Section 01 30 00 - Administrative Requirements: Pre-installation meeting.

B. Convene minimum one week prior to commencing work of this section.

1.7 DELIVERY, STORAGE, AND HANDLING

A. Section 01 60 00 - Product Requirements: Requirements for transporting, handling, storing, and protecting products.

B. Furnish temporary end caps and closures on piping and fittings. Maintain in place until installation.

C. Protect piping from entry of foreign materials by temporary covers, completing sections of the Work, and isolating parts of completed system.

1.8 ENVIRONMENTAL REQUIREMENTS

A. Section 01 60 00 - Product Requirements: Environmental conditions affecting products on site.

B. Do not install underground piping when bedding is wet or frozen.

1.9 FIELD MEASUREMENTS

A. Verify field measurements prior to fabrication.

1.10 COORDINATION

A. Section 01 30 00 - Administrative Requirements: Requirements for coordination.

B. Coordinate installation of buried piping with trenching.

PART 2 PRODUCTS

2.1 EQUIPMENT DRAINS AND OVERFLOWS (Condensate Drains)

A. Copper Tubing: ASTM B88, Type L, drawn.
   1. Fittings: ASME B16.18, cast copper alloy or ASME B16.22, wrought copper and bronze.
   2. Joints: ASTM B32, Alloy Grade Sb5 tin-antimony, or Alloy Grade Sn95 tin-silver, lead free solder.

2.2 NATURAL GAS PIPING, BURIED WITHIN 5 FEET OF BUILDING

A. Steel Pipe: ASTM A53/A53M Schedule 40 black.
   1. Fittings: ASTM A234/A234M forged steel welding type.
   2. Joints: ASME B31.9, welded.
   3. Jacket: AWWA C105 polyethylene jacket or double layer, half-lapped 10 mil polyethylene tape.

2.3 LOW PRESSURE NATURAL GAS PIPING, ABOVE GRADE

A. Steel Pipe: ASTM A53/A53M Schedule 40 black.
   1. Fittings: ASME B16.3, malleable iron, or ASTM A234/A234M forged steel welding type.
   2. Joints: Threaded for pipe 1-1/4" inch and smaller; welded for pipe 1-1/2 inches and larger.
   3. Pipe to be painted yellow and shall have pipe identification markers.

2.4 MEDIUM PRESSURE NATURAL GAS PIPING, ABOVE GRADE

A. Steel Pipe: ASTM A53/A53M Schedule 40 black.
   1. Fittings: ASME B16.3, malleable iron, or ASTM A234/A234M forged steel welding type.
   2. Joints: welded.
   3. Piping to be painted yellow and have pipe identification markers.

2.5 UNIONS AND FLANGES

A. Unions for Pipe 2 inches and Smaller:
   1. Ferrous Piping: Class 150, malleable iron, threaded.
   2. Copper Piping: Class 150, bronze unions with soldered.
   3. Dielectric Connections: Union with galvanized or plated steel threaded end, copper solder end, water impervious isolation barrier.

B. Flanges for Pipe 2-1/2 inches and Larger:
   1. Ferrous Piping: Class 150, forged steel, slip-on flanges.
   2. Copper Piping: Class 150, slip-on bronze flanges.
   3. Gaskets: 1/16 inch thick preformed neoprene gaskets.

2.6 UNDERGROUND PIPE MARKERS

A. Trace Wire: Magnetic detectable conductor, brightly colored plastic covering, imprinted with NATURAL GAS SERVICE, DOMESTIC WATER SERVICE, SANITARY SEWER SERVICE" in large letters.

PART 3 EXECUTION

3.1 EXAMINATION

A. Section 01 30 00 - Administrative Requirements: Verification of existing conditions before starting work.

B. Verify excavations are to required grade, dry, and not over-excavated.

C. Verify trenches are ready to receive piping.

3.2 PREPARATION

A. Ream pipe and tube ends. Remove burrs. Bevel plain end ferrous pipe.

B. Remove scale and dirt on inside and outside before assembly.

C. Prepare piping connections to equipment with flanges or unions.

D. Keep open ends of pipe free from scale and dirt. Protect open ends with temporary plugs or caps.

3.3 INSTALLATION - BURIED PIPING SYSTEMS

A. Install natural gas piping in accordance with NFPA 54.

B. Establish elevations of buried piping with not less than two feet of cover.

C. Establish minimum separation of 18 inches from other services piping in accordance with code.

D. Excavate pipe trench in accordance with Division 31.

E. Install pipe to elevation.

F. Place bedding material at trench bottom to provide uniform bedding for piping, level bedding materials in one continuous layer not exceeding 4 inches compacted depth; compact to 95 percent maximum density.

G. Install pipe on prepared bedding.

H. Route pipe in straight line.

I. When installing piping in PVC protector pipe install both carrier pipe and PVC pipe using long sweep elbows.

J. Install pipe to allow for expansion and contraction without stressing pipe or joints.

K. Install shutoff and drain valves at locations indicated on Drawings in accordance with this Section.

L. Install trace wire continuous over top of pipe; coordinate with Section 31 23 23. Refer to Section 23 05 53.

M. Pipe Cover and Backfilling:
   1. Backfill trench in accordance with Section 31 23 23.
   2. Maintain optimum moisture content of fill material to attain required compaction density.

3. After hydrostatic test, evenly backfill entire trench width by hand placing backfill material and hand tamping in 4 inches compacted layers to 12 inches minimum cover over top of jacket. Compact to 95 percent maximum density.
4. Evenly and continuously backfill remaining trench depth in uniform layers with backfill material.
5. Do not use wheeled or tracked vehicles for tamping.

3.4 INSTALLATION - ABOVE GROUND PIPING

A. Route piping in orderly manner and maintain gradient. Route parallel and perpendicular to walls.

B. Install piping to maintain headroom without interfering with use of space or taking more space than necessary.

C. Group piping whenever practical at common elevations.

D. Sleeve pipe passing through partitions, walls and floors. Refer to Section 23 05 29.

E. Install piping to allow for expansion and contraction without stressing pipe, joints, or connected equipment. Refer to Section 23 05 16.

F. Provide clearance in hangers and from structure and other equipment for installation of insulation and access to valves and fittings. Refer to Section 23 07 00.

G. Provide access where valves and fittings are not accessible. Coordinate size and location of access doors with Section 08 31 13.

H. Install non-conducting dielectric connections wherever jointing dissimilar metals.

I. Establish invert elevations, slopes for drainage to 1/8 inch per foot minimum. Maintain gradients.

J. Slope piping and arrange systems to drain at low points.

K. Protect piping systems from entry of foreign materials by temporary covers, completing sections of the Work, and isolating parts of completed system.

L. Install piping penetrating roofed areas to maintain integrity of roof assembly.

M. Install valves in accordance with Section 23 05 23.

N. Insulate piping. Refer to Section 23 07 00.

O. Install pipe identification in accordance with Section 23 05 53.

3.5 FIELD QUALITY CONTROL

A. Section 01 40 00 - Quality Requirements

B. Test heating water piping system, chilled water piping system, condenser water piping system in accordance with ASME B31.9 and ASME B31.1.

C. Pressure test natural gas piping in accordance with NFPA 54.

3.6 CLEANING

A. Section 01 70 00 - Execution and Closeout Requirements: Requirements for cleaning.

B. After completion, fill, clean, and treat heating water piping system, chilled water piping system, and condenser water piping system. Refer to Section 23 25 00.

END OF SECTION

SECTION 23 05 13 - COMMON MOTOR REQUIREMENTS FOR HVAC EQUIPMENT

PART 1 GENERAL

1.1 SUMMARY

A. Section includes single- and three-phase motors for application on equipment provided under other sections.

B. Related Sections:
1. Section 26 05 26 - Grounding and Bonding for Electrical Systems.
2. Section 26 05 53 - Identification for Electrical Systems.

1.2 REFERENCES

A. American Bearing Manufacturers Association:
1. ABMA 9 - Load Ratings and Fatigue Life for Ball Bearings.

B. National Electrical Manufacturers Association:
1. NEMA MG 1 - Motors and Generators.

C. International Electrical Testing Association:
1. NETA ATS - Acceptance Testing Specifications for Electrical Power Distribution Equipment and Systems.

1.3 SUBMITTALS

A. Section 01 33 00 - Submittal Procedures: Submittal procedures.

B. Product Data: Submit catalog data for each motor furnished loose. Indicate nameplate data, standard compliance, electrical ratings and characteristics, and physical dimensions, weights, mechanical performance data, and support points.

C. Test Reports: Indicate procedures and results for specified factory and field testing and inspection.

1.4 QUALIFICATIONS

A. Manufacturer: Company specializing in manufacturing products specified in this section with minimum three years [documented] experience.

1.5 DELIVERY, STORAGE, AND HANDLING

A. Section 01 60 00 - Product Requirements: Product storage and handling requirements.

B. Lift only with lugs provided. Handle carefully to avoid damage to components, enclosure, and finish.

C. Protect products from weather and moisture by covering with plastic or canvas and by maintaining heating within enclosure.

D. For extended outdoor storage, remove motors from equipment and store separately.

PART 2 PRODUCTS

2.1 PRODUCT REQUIREMENTS FOR MOTORS FURNISHED WITH EQUIPMENT

A. Motors 3/4 hp and Larger: Three-phase motor as specified below.

B. Motors Smaller Than 3/4 hp: Single-phase motor as specified below, except motors less than 250 watts or 1/4 hp may be equipment manufacturer's standard.

C. Three-Phase Motors: NEMA MG 1, Design B, energy-efficient squirrel-cage induction motor, with windings to accomplish starting methods and number of speeds as indicated on Drawings.
   1. Voltage: As indicated on Drawings.
   2. Enclosure: Meet conditions of installation unless specific enclosure is indicated on Drawings.
   3. Design for continuous operation in 40 degrees C environment, with temperature rise in accordance with NEMA MG 1 limits for insulation class, service factor, and motor enclosure type.
   4. Motor Frames: NEMA Standard T-Frames of steel, aluminum, or cast iron with end brackets of cast iron or aluminum with steel inserts.
   5. Thermistor System (Motor Frame Sizes 254T and Larger): Three PTC thermistors embedded in motor windings and epoxy encapsulated solid state control relay with wiring to terminal box.
   6. Bearings: Grease lubricated anti-friction ball bearings with housings equipped with plugged provision for relubrication, rated for minimum ABMA 9, L-10 life of 200,000 hours. Calculate bearing load with NEMA minimum V-belt pulley with belt center line at end of NEMA standard shaft extension. Stamp bearing sizes on nameplate.
   7. Sound Power Levels: Conform to NEMA MG 1.

D. Single Phase Motors:
   1. Permanent split-capacitor type where available, otherwise use split-phase start/capacitor run or capacitor start/capacitor run motor.
   2. Voltage: 115 volts, single phase, 60 Hz.

E. Wiring Terminations: Furnish terminal lugs to match branch circuit conductor quantities, sizes, and materials indicated.

2.2 SOURCE QUALITY CONTROL

A. Test motors in accordance with NEMA MG 1, including winding resistance, no-load speed and current, locked rotor current, insulation high-potential test, and mechanical alignment tests.

PART 3 EXECUTION

3.1 INSTALLATION

A. Install securely on firm foundation. Mount ball bearing motors in accordance with motor manufacturer's requirements.

B. Install engraved plastic nameplates in accordance with Section 26 05 53.

C. Ground and bond motors in accordance with Section 26 05 26.

3.2 FIELD QUALITY CONTROL

A. Division 01 - Quality Requirements.

B. Inspect and test in accordance with NETA ATS, except Section 4.

C. Perform inspections and tests listed in NETA ATS, Section 7.15.

END OF SECTION

SECTION 23 05 23 - GENERAL-DUTY VALVES FOR HVAC PIPING

PART 1 GENERAL

1.1 SUMMARY

A. Section Includes:
1. Globe valves.
2. Ball valves.
3. Plug valves.
4. Butterfly valves.
5. Check valves.

B. Related Sections:
1. Section 23 05 03 - Pipes and Tubes for HVAC Piping and Equipment: Product and installation requirements for piping materials applying to various system types.
2. Section 23 05 29 - Hangers and Supports for HVAC Piping and Equipment: Product and installation requirements for pipe hangers and supports.
3. Section 23 07 00 - HVAC Insulation: Product and installation requirements for insulation for valves.
4. Section 23 11 23 - Facility Natural-Gas Piping: Product and installation requirements for piping, piping specialties, and equipment used in natural gas piping systems.
5. Section 23 21 13 - Hydronic Piping: Product and installation requirements for piping used in hydronic piping systems.
6. Section 23 21 16 - Hydronic Piping Specialties: Product and installation requirements for piping specialties used in hydronic piping systems.

1.2 REFERENCES

A. ASTM International:
1. ASTM A216/A216M - Standard Specification for Steel Castings, Carbon, Suitable for Fusion Welding, for High-Temperature Service.
2. ASTM D1785 - Standard Specification for Poly (Vinyl Chloride) (PVC) Plastic Pipe, Schedules 40, 80, and 120.
3. ASTM D4101 - Standard Specification for Propylene Injection and Extrusion Materials.

B. Manufacturers Standardization Society of the Valve and Fittings Industry:
1. MSS SP 67 - Butterfly Valves.
2. MSS SP 70 - Cast Iron Gate Valves, Flanged and Threaded Ends.
3. MSS SP 71 - Cast Iron Swing Check Valves, Flanged and Threaded Ends.
4. MSS SP 78 - Cast Iron Plug Valves, Flanged and Threaded Ends.
5. MSS SP 80 - Bronze Gate, Globe, Angle and Check Valves.
6. MSS SP 85 - Cast Iron Globe & Angle Valves, Flanged and Threaded.
7. MSS SP 110 - Ball Valves Threaded, Socket-Welding, Solder Joint, Grooved and Flared Ends.

C. Underwriters Laboratories Inc.:
1. UL 842 - Valves for Flammable Fluids.

1.3 SUBMITTALS

A. Section 01 33 00 - Submittal Procedures: Requirements for submittals.

B. Product Data: Submit manufacturers catalog information with valve data and ratings for each service.

C. Manufacturer's Installation Instructions: Submit hanging and support methods, joining procedures.

D. Manufacturer's Certificate: Certify products meet or exceed specified requirements.

1.4 CLOSEOUT SUBMITTALS

A. Section 01 70 00 - Execution and Closeout Requirements: Requirements for submittals.

B. Project Record Documents: Record actual locations of valves.

C. Operation and Maintenance Data: Submit installation instructions, spare parts lists, exploded assembly views.

1.5 QUALITY ASSURANCE

A. For drinking water service, provide valves complying with NSF 61.

1.6 QUALIFICATIONS

A. Manufacturer: Company specializing in manufacturing Products specified in this section with minimum three years documented experience.

B. Installer: Company specializing in performing work of this section with minimum five years documented experience in similar projects of scope and size.

1.7 PRE-INSTALLATION MEETINGS

A. Division 01 - Administrative Requirements: Pre-installation meeting.

B. Convene minimum one week prior to commencing work of this section.

1.8 DELIVERY, STORAGE, AND HANDLING

A. Division 01 - Product Requirements: Requirements for transporting, handling, storing, and protecting products.

B. Accept valves on site in shipping containers with labeling in place. Inspect for damage.

C. Provide temporary protective coating on cast iron and steel valves.

1.9 ENVIRONMENTAL REQUIREMENTS

A. Section 01 60 00 - Product Requirements: Environmental conditions affecting products on site.

B. Do not install valves underground when bedding is wet or frozen.

1.10 WARRANTY

A. Division 01 - Execution and Closeout Requirements: Requirements for warranties.

B. Furnish five year manufacturer warranty for valves excluding packing.

1.11 EXTRA MATERIALS

A. Division 01 - Execution and Closeout Requirements: Requirements for extra materials.

B. Furnish two packing kits for each size valve.

PART 2 PRODUCTS

2.1 GLOBE VALVES

A. Manufacturers:
1. Crane Valve, North America.
2. Hammond Valve.
3. Milwaukee Valve.
4. NIBCO, Inc.
5. Stockham Valves & Fittings.
6. Substitutions: Not Permitted.

B. 2 inches and Smaller: MSS SP 80, Class 125, bronze body, bronze trim, threaded union bonnet, hand wheel, teflon composition disc, solder or threaded] ends.

C. 2-1/2 inches and Larger: MSS SP 85, Class 125, cast iron body, bronze trim, hand wheel, outside screw and yoke, flanged ends. Furnish chain-wheel operators for valves 6 inches and larger mounted over 8 feet above floor.

2.2 BALL VALVES

A. Manufacturers:
1. Crane Valve, North America.
2. Hammond Valve.
3. Milwaukee Valve.
4. NIBCO, Inc.
5. Stockham Valves & Fittings.
6. Substitutions: Not Permitted.

A. 2 inches and Smaller: MSS SP 110, Class 150, bronze, three piece body, type 316 stainless steel ball, full port, teflon seats, blow-out proof stem, solder or threaded ends, extended lever handle.

B. For Natural Gas Equipment Isolation - 1/4 inch to 1 inch: MSS SP 110, Class 125, two piece, threaded ends, bronze body, chrome plated bronze ball, reinforced teflon seats, blow-out proof stem, lever handle, UL 842 listed for flammable liquids and LPG, full port.

C. For Natural Gas Equipment Isolation - 1-1/4 inch to 3 inch: MSS SP 110, Class 125, two piece, threaded ends, bronze body, chrome plated bronze ball, reinforced teflon seats, blow-out proof stem, lever handle, UL 842 listed for flammable liquids and LPG, conventional port.

2.3 BUTTERFLY VALVES

A. Manufacturers:
1. Crane Valve, North America.
2. Hammond Valve.
3. Milwaukee Valve.
4. NIBCO, Inc.
5. Stockham Valves & Fittings.
6. Substitutions: Not Permitted.

B. 2-1/2 inches and Larger: MSS SP 67, Class 200.
1. Body: Cast or ductile iron, wafer, lug, or grooved ends, stainless steel stem, extended neck.
2. Disc: Nickel-plated ductile iron.
3. Seat: Resilient replaceable EPDM.
4. Handle and Operator: 10 position lever handle. Furnish gear operators for valves 8 inches and larger, and chain-wheel operators for valves mounted over 8 feet above floor.

2.4 CHECK VALVES

A. Horizontal Swing Check Valves:
1. Manufacturers:
a. Crane Valve, North America.
b. Hammond Valve.
c. Milwaukee Valve.
d. NIBCO, Inc.
e. Stockham Valves & Fittings.
f. Substitutions: Not Permitted.
2. 2 inches and Smaller: MSS SP 80, Class 150, bronze body and cap, bronze seat, Buna-N disc, solder or threaded ends.
3. 2-1/2 inches and Larger: MSS SP 71, Class 125, cast iron body, bolted cap, bronze or cast iron disc, renewable disc seal and seat, flanged ends.

B. Spring Loaded Check Valves:
1. Manufacturers:
a. Crane Valve, North America.
b. Hammond Valve.
c. Milwaukee Valve.
d. NIBCO, Inc.
e. Stockham Valves & Fittings.
f. Substitutions: Not Permitted.
2. 2 inches and Smaller: MSS SP 80, Class 250, bronze body, in-line spring lift check, silent closing, Buna-N disc, integral seat, solder or threaded] ends.
3. 2-1/2 inches and Larger: MSS SP 71, Class 125, wafer style, cast iron body, bronze seat, center guided bronze disc, stainless steel spring and screws, flanged ends.

2.5 PLUG VALVES

A. Manufacturers:
   1. DeZURIK, Unit of SPX Corp.
   2. Flow Control Equipment, Inc
   3. Homestead Valve.

B. 2 inches and Smaller: MSS SP 78, Class 150, semi-steel construction, round port, full pipe area, pressure lubricated, teflon packing, threaded ends. Furnish one plug valve wrench for every ten plug-valves with minimum of one wrench.

C. 2-1/2 inches and Larger: MSS SP 78, Class 150, semi-steel construction, round port, full pipe area, pressure lubricated, teflon packing, flanged ends. Furnish worm gear-operated.

PART 3 EXECUTION

3.1 EXAMINATION

A. Division 01 - Administrative Requirements: Verification of existing conditions before starting work.

B. Verify piping system is ready for valve installation.

3.2 INSTALLATION

A. Install valves with stems upright or horizontal, not inverted.

B. Install brass male adapters each side of valves in copper piped system. Solder adapters to pipe.

C. Install 3/4 inch ball valves with cap for drains at main shut-off valves, low points of piping, bases of vertical risers, and at equipment.

D. Install valves with clearance for installation of insulation and allowing access.

E. Provide access where valves and fittings are not accessible. Coordinate size and location of access doors with Section 08 31 13.

F. Refer to Section 23 05 29 for pipe hangers.

G. Refer to Section 23 07 00 for insulation requirements for valves.

H. Refer to Section 23 05 03 for piping materials applying to various system types.

I. For installation of valves in hot water and chilled water piping systems refer to Section 23 22 13.

J. For installation of valves in natural gas systems refer to Section 23 11 23.

3.3 VALVE APPLICATIONS

A. Install shutoff and drain valves at locations indicated on Drawings in accordance with this Section.

B. Install ball or butterfly valves for shut-off and to isolate equipment, part of systems, or vertical risers.

C. Install globe valves for throttling, bypass, or manual flow control services.

D. Install spring loaded check valves on discharge of water pumps.

E. Install lug end butterfly valves adjacent to equipment when functioning to isolate equipment.

F. Install ball and butterfly in heating, chilled and condenser water systems for shut-off service.

G. Install butterfly valves in heating, chilled and condenser water systems interchangeably with globe valves.

H. Install calibrated globe valves in heating, chilled and condenser water systems for throttling service.

END OF SECTION 230523

SECTION 23 05 29 - HANGERS AND SUPPORTS FOR HVAC PIPING AND EQUIPMENT

PART 1 GENERAL

1.1 SUMMARY

A. Section Includes:
1. Pipe hangers and supports.
2. Hanger rods.
3. Inserts.
4. Flashing.
5. Equipment curbs.
6. Sleeves.
7. Mechanical sleeve seals.
8. Formed steel channel.
9. Firestopping relating to HVAC work.
10. Firestopping accessories.
11. Equipment bases and supports.

B. Related Sections:
1. Division 03 - Concrete Forming and Accessories: Execution requirements for placement of sleeves in concrete forms specified by this section.
2. Division 03 - Cast-In-Place Concrete: Execution requirements for placement of concrete housekeeping pads specified by this section.
3. Section 07 84 00 - Firestopping: Product requirements for firestopping for placement by this section.
4. Division 07 - Joint Protection: Product requirements for sealant materials for placement by this section.
5. Division 09 - Painting and Coating: Product and execution requirements for painting specified by this section.
6. Section 23 05 03 - Pipes and Tubes for HVAC Piping and Equipment: Execution requirements for placement of hangers and supports specified by this section.
7. Section 23 05 48 - Vibration and Seismic Controls for HVAC Piping and Equipment: Product and execution requirements for vibration isolators.
8. Section 23 11 23 - Facility Natural-Gas Piping: Execution requirements for placement of hangers and supports specified by this section.
9. Section 23 21 13 - Hydronic Piping: Execution requirements for placement of hangers and supports specified by this section.

1.2 REFERENCES

A. American Society of Mechanical Engineers:
1. ASME B31.1 - Power Piping.
2. ASME B31.5 - Refrigeration Piping.
3. ASME B31.9 - Building Services Piping.

B. ASTM International:
1. ASTM E119 - Standard Test Methods for Fire Tests of Building Construction and Materials.
2. ASTM E814 - Standard Test Method for Fire Tests of Through Penetration Fire Stops.

3. ASTM F708 - Standard Practice for Design and Installation of Rigid Pipe Hangers.
4. ASTM E1966 - Standard Test Method for Fire-Resistive Joint Systems.

C. American Welding Society:
1. AWS D1.1 - Structural Welding Code - Steel.

D. FM Global:
1. FM - Approval Guide, A Guide to Equipment, Materials & Services Approved By Factory Mutual Research For Property Conservation.

E. Manufacturers Standardization Society of the Valve and Fittings Industry:
1. MSS SP 58 - Pipe Hangers and Supports - Materials, Design and Manufacturer.
2. MSS SP 69 - Pipe Hangers and Supports - Selection and Application.
3. MSS SP 89 - Pipe Hangers and Supports - Fabrication and Installation Practices.

F. Underwriters Laboratories Inc.:
1. UL 263 - Fire Tests of Building Construction and Materials.
2. UL 723 - Tests for Surface Burning Characteristics of Building Materials.
3. UL 1479 - Fire Tests of Through-Penetration Firestops.
4. UL 2079 - Tests for Fire Resistance of Building Joint Systems.
5. UL - Fire Resistance Directory.

G. Intertek Testing Services (Warnock Hersey Listed):
1. WH - Certification Listings.

1.3 SUBMITTALS

A. Division 01 - Submittal Procedures: Submittal procedures.

B. Shop Drawings: Indicate system layout with location including critical dimensions, sizes, and pipe hanger and support locations and detail of trapeze hangers.

C. Product Data:
1. Hangers and Supports: Submit manufacturers catalog data including load capacity.

D. Design Data: Indicate load carrying capacity of trapeze, multiple pipe, and riser support hangers. Indicate calculations used to determine load carrying capacity of trapeze, multiple pipe, and riser support hangers.

E. Manufacturer's Installation Instructions:
1. Hangers and Supports: Submit special procedures and assembly of components.

F. Manufacturer's Certificate: Certify products meet or exceed specified requirements.

1.4 DELIVERY, STORAGE, AND HANDLING

A. Division 01 - Product Requirements: Requirements for transporting, handling, storing, and protecting products.

B. Accept materials on site in original factory packaging, labeled with manufacturer's identification.

C. Protect from weather and construction traffic, dirt, water, chemical, and damage, by storing in original packaging.

1.5 FIELD MEASUREMENTS

A. Verify field measurements prior to fabrication.

1.6 WARRANTY

A. Division 01 - Execution and Closeout Requirements: Product warranties and product bonds.

B. Furnish five year manufacturer warranty for pipe hangers and supports.

PART 2 PRODUCTS

2.1 PIPE HANGERS AND SUPPORTS

A. Manufacturers:
1. Carpenter & Paterson Inc.
2. Creative Systems Inc.
3. Flex-Weld, Inc.
4. Glope Pipe Hanger Products Inc.
5. Michigan Hanger Co.
6. Superior Valve Co.
7. Substitutions: Not Permitted.

B. Hydronic Piping:
1. Conform to ASME B31.9, ASTM F708, MSS SP58, MSS SP69, MSS SP89.
2. Hangers for Pipe Sizes 1/2 to 1-1/2 inch: Malleable iron, adjustable swivel, split ring.
3. Hangers for Cold Pipe Sizes 2 inches and Larger: Carbon steel, adjustable, clevis.
4. Hangers for Hot Pipe Sizes 2 to 4 inches: Carbon steel, adjustable, clevis.
5. Hangers for Hot Pipe Sizes 6 inches and Larger: Adjustable steel yoke, cast iron roll, double hanger.
6. Multiple or Trapeze Hangers: Steel channels with welded spacers and hanger rods.
7. Multiple or Trapeze Hangers for Hot Pipe Sizes 6 inches and Larger: Steel channels with welded spacers and hanger rods, cast iron roll.
8. Wall Support for Pipe Sizes 3 inches and Smaller: Cast iron hooks.
9. Wall Support for Pipe Sizes 4 inches and Larger: Welded steel bracket and wrought steel clamp.
10. Wall Support for Hot Pipe Sizes 6 inches and Larger: Welded steel bracket and wrought steel clamp with adjustable steel yoke and cast iron roll.
11. Vertical Support: Steel riser clamp.
12. Floor Support for Cold Pipe: Cast iron adjustable pipe saddle, lock nut, nipple, floor flange, and concrete pier or steel support.
13. Floor Support for Hot Pipe Sizes 4 Inches and Smaller: Cast iron adjustable pipe saddle, lock nut, nipple, floor flange, and concrete pier or steel support.
14. Floor Support for Hot Pipe Sizes 6 inches and Larger: Adjustable cast iron roll and stand, steel screws, and concrete pier or steel support.
15. Copper Pipe Support: Copper-plated, carbon steel ring.

C. Refrigerant Piping:
   1. Conform to ASME B31.9; ASTM F708; MSS SP58; MSS SP69; MSS SP89.
   2. Hangers for Pipe Sizes 1/2 to 1-1/2 inch: Malleable iron, adjustable swivel, split ring.
   3. Hangers for Pipe Sizes 2 inches and Larger: Carbon steel, adjustable, clevis.
   4. Multiple or Trapeze Hangers: Steel channels with welded spacers and hanger rods.
   5. Wall Support for Pipe Sizes 3 inches and Smaller: Cast iron hook.
   6. Wall Support for Pipe Sizes 4 inches and Larger: Welded steel bracket and wrought steel clamp.
   7. Vertical Support: Steel riser clamp.
   8. Floor Support: Cast iron adjustable pipe saddle, lock nut, nipple, floor flange, and concrete pier or steel support.
   9. Copper Pipe Support: Copper-plated carbon-steel ring.

2.2 ACCESSORIES

A. Hanger Rods: Mild steel threaded both ends, threaded on one end, or continuous threaded.

2.3 FLASHING

A. Metal Flashing: 26 gage thick galvanized steel.

B. Metal Counterflashing: 22 gage thick galvanized steel.

C. Lead Flashing:
   1. Waterproofing: 5 lb./sq. ft sheet lead.
   2. Soundproofing: 1 lb./sq. ft sheet lead.

D. Flexible Flashing: 47 mil thick sheet butyl; compatible with roofing.

E. Caps: Steel, 22 gage minimum; 16 gage at fire resistant elements.

2.4 EQUIPMENT CURBS

A. Manufacturers:
   1. AES Industries.
   2. Commercial Products Group; Hart & Cooley Inc.
   3. Custom Solution Roof and Metal Products.
   4. EZCurbAdapter.com.
   5. Lloyd Industries, Inc.
   6. Metalform Manufacturing, Inc.
   7. R & S Manufacturing and Sales Company, Inc.
   8. Roof Products, Inc.
   9. The Pate Company.
   10. Thybar Corporation.
   11. As provided by a specific equipment manufacturer.
   12. Substitutions: Not Permitted.

B. Fabrication: Welded 18 gage galvanized steel shell and base, mitered 3 inch cant, variable step to match root insulation, 1-1/2 inch thick insulation, factory installed wood nailer.

2.5 SLEEVES

A. Sleeves for Pipes Through Non-fire Rated Floors: 18 gage thick galvanized steel.

B. Sleeves for Pipes Through Non-fire Rated Beams, Walls, Footings, and Potentially Wet Floors: Steel pipe or 18 gage thick galvanized steel.

C. Sealant: Acrylic; refer to Section 07 90 00.

2.6 MECHANICAL SLEEVE SEALS

A. Manufacturers:
1. Thunderline Link-Seal, Inc..
2. Metraflex, Onc.
3. NMP Corporation.
4. Substitutions: Not Permitted.

B. Product Description: Modular mechanical type, consisting of interlocking synthetic rubber links shaped to continuously fill annular space between object and sleeve, connected with bolts and pressure plates causing rubber sealing elements to expand when tightened, providing watertight seal and electrical insulation.

2.7 FORMED STEEL CHANNEL

A. Product Description: Galvanized 12 gage thick steel. With holes 1-1/2 inches on center.

PART 3 EXECUTION

3.1 INSTALLATION - PIPE HANGERS AND SUPPORTS

A. Install in accordance with MSS SP 58; MSS SP 69; MSS SP 89.

B. Support horizontal piping as scheduled.

C. Install hangers with minimum 1/2 inch space between finished covering and adjacent work.

D. Place hangers within 12 inches of each horizontal elbow.

E. Use hangers with 1-1/2 inch minimum vertical adjustment.

F. Support horizontal cast iron pipe adjacent to each hub, with 5 feet maximum spacing between hangers.

G. Support vertical piping at every other floor. Support vertical cast iron pipe at each floor at hub.

H. Where piping is installed in parallel and at same elevation, provide multiple pipe or trapeze hangers.

I. Support riser piping independently of connected horizontal piping.

J. Provide copper plated hangers and supports for copper piping; sheet lead packing between hanger or support and piping.

K. Design hangers for pipe movement without disengagement of supported pipe.

L. Prime coat exposed steel hangers and supports. Refer to Division 09. Hangers and supports located in crawl spaces, pipe shafts, and suspended ceiling spaces are not considered exposed.

M. Provide clearance in hangers and from structure and other equipment for installation of insulation. Refer to Section 22 07 00.

3.2 INSTALLATION - EQUIPMENT BASES AND SUPPORTS

A. Provide housekeeping pads of concrete, minimum 3-1/2 inches thick and extending 6 inches beyond supported equipment. Refer to Division 03.

B. Using templates furnished with equipment, install anchor bolts, and accessories for mounting and anchoring equipment.

C. Construct supports of formed steel channel. Brace and fasten with flanges bolted to structure.

D. Provide rigid anchors for pipes after vibration isolation components are installed. Refer to Section 21 05 48.

3.3 INSTALLATION - FLASHING

A. Provide flexible flashing and metal Counterflashing where piping and ductwork penetrate weather or waterproofed walls, floors, and roofs.

B. Provide acoustical lead flashing around ducts and pipes penetrating equipment rooms for sound control.

C. Provide curbs for roof installations 14 inches minimum high above roofing surface. Flash and counter-flash with sheet metal; seal watertight. Attach Counterflashing to equipment and lap base flashing on roof curbs. Flatten and solder joints.

D. Adjust storm collars tight to pipe with bolts; caulk around top edge. Use storm collars above roof jacks. Screw vertical flange section to face of curb.

3.4 INSTALLATION - SLEEVES

A. Exterior watertight entries: Seal with mechanical sleeve seals.

B. Set sleeves in position in forms. Provide reinforcing around sleeves.

C. Size sleeves large enough to allow for movement due to expansion and contraction. Provide for continuous insulation wrapping.

D. Extend sleeves through floors 1 inch above finished floor level. Caulk sleeves.

E. Where piping penetrates floor, ceiling, or wall, close off space between pipe and adjacent work with stuffing insulation and caulk. Provide close fitting metal collar or escutcheon covers at both sides of penetration.

F. Install chrome plated steel escutcheons at finished surfaces.

3.5 FIELD QUALITY CONTROL

A. Division 01 - Execution and Closeout Requirements: Requirements for testing, adjusting, and balancing.

3.6 CLEANING

A. Division 01 - Execution and Closeout Requirements: Requirements for cleaning.

3.7 PROTECTION OF FINISHED WORK

A. Division 01 - Execution and Closeout Requirements: Requirements for protecting finished Work.

B. Protect adjacent surfaces from damage by material installation.

3.8 SCHEDULES

A. Copper and Steel Pipe Hanger Spacing:

PIPE SIZE Inches	COPPER TUBING MAXIMUM HANGER SPACING Feet	STEEL PIPE MAXIMUM HANGER SPACING Feet	COPPER TUBING HANGER ROD DIAMETER Inches	STEEL PIPE HANGER ROD DIAMETER Inches
1/2	5	7	3/8	3/8
3/4	5	7	3/8	3/8
1	6	7	3/8	3/8
1-1/4	7	7	3/8	3/8
1-1/2	8	9	3/8	3/8
2	8	10	3/8	3/8
2-1/2 (Note 2)	9	11	1/2	1/2
3	10	12	1/2	1/2
4	12	14	1/2	5/8
5	13	16	1/2	5/8
6	14	17	5/8	3/4
8	16	19	3/4	3/4
10	18	22	3/4	7/8
12	19	23	3/4	7/8
14	22	25	7/8	1
16	23	27	7/8	1
18	25	28	1	1
20	27	30	1	1-1/4
24	28	32	1-1/4	1-1/4

Note 1: Refer to manufacturer's recommendations for grooved end piping systems.

Note 2: 20 feet maximum spacing, minimum of one hanger for each pipe section close to joint behind bell. Provide hanger at each change of direction and each branch connection. For pipe sizes 6 inches and smaller, subjected to loadings other than weight of pipe and contents, limit span to maximum spacing for water service steel pipe.

END OF SECTION

SECTION 23 05 48 - VIBRATION AND SEISMIC CONTROLS FOR HVAC PIPING AND EQUIPMENT

PART 1 GENERAL

1.1 SUMMARY

A. Section Includes:
1. Vibration isolators.
2. Duct sound attenuators.

B. Related Sections:
1. Division 03 - Cast-In-Place Concrete: Execution requirements for placement of isolators in floating floor slabs specified by this section and product requirements for concrete for placement by this section.
2. Division 07 - Joint Protection: Product requirements for joint sealers specified for placement by this section.
3. Section 23 05 16 - Expansion Fittings and Loops for HVAC Piping: Product requirements for anchors and piping expansion compensation.
4. Section 23 05 29 - Hangers and Supports for HVAC Piping and Equipment: Product requirements for pipe hangers and supports.
5. Section 23 05 93 - Testing, Adjusting, and Balancing for HVAC: Requirements for sound and vibration measurements performed independent of this section.
6. Section 23 33 00 - Air Duct Accessories: Product requirements for both solid and flexible duct connectors for duct sound attenuators specified for placement by this section.

1.2 REFERENCES

A. Air Movement and Control Association International, Inc.:
1. AMCA 300 - Reverberant Room Method for Sound Testing of Fans.

B. American National Standards Institute:
1. ANSI S1.4 - Sound Level Meters.
2. ANSI S1.8 - Reference Quantities for Acoustical Levels.
3. ANSI S1.13 - Methods for the Measurement of Sound Pressure Levels in Air.
4. ANSI S12.36 - Survey Methods for the Determination of Sound Power Levels of Noise Sources.

C. Air-Conditioning and Refrigeration Institute:
1. ARI 575 - Method of Measuring Machinery Sound within Equipment Space.

D. American Society of Heating, Refrigerating and:
1. ASHRAE 68 - Laboratory Method of Testing In-Duct Sound Power Measurement Procedure for Fans.
2. ASHRAE Handbook - HVAC Applications.

E. ASTM International:
1. ASTM E90 - Standard Test Method for Laboratory Measurement of Airborne Sound Transmission Loss of Building Partitions and Elements.

2. ASTM E477 - Standard Test Method for Measuring Acoustical and Airflow Performance of Duct Liner Materials and Prefabricated Silencers.
3. ASTM E596 - Standard Test Method for Laboratory Measurement of the Noise Reduction of Sound-Isolating Enclosures.

F. Sheet Metal and Air Conditioning Contractors':
1. SMACNA - HVAC Duct Construction Standard - Metal and Flexible.

1.3 PERFORMANCE REQUIREMENTS

A. Provide vibration isolation on motor driven equipment over 0.5 hp, plus connected piping and ductwork.

B. Provide minimum static deflection of isolators for equipment as follows:

	Basement, Under 20 hp	Basement, Over 20 hp	Upper Floors, Normal	Upper Floors/Roof, Critical
Under 400 rpm:				
400 - 600 rpm:	1 inch	2 inches	3.5 inches	
600 - 800 rpm:	0.5 inch	1 inch	2 inches	3.5 inches
800 - 900 rpm:	0.2 inch	0.5 inch	1 inch	2 inches
1100 - 1500 rpm:	0.14 inch	0.2 inch	0.5 inch	1 inch
Over 1500 rpm:	0.1 inch	0.15 inch	0.2 inch	0.5 inch

C. Consider upper floor and roof locations critical unless otherwise indicated.

D. Use concrete inertia bases for fans having static pressure in excess of 3.5 inches water column or motors in excess of 40 hp, and on base mounted pumps over 10 hp.

E. Maintain sound level of spaces at levels not to exceed those listed below by utilizing acoustical devices.

F. Maintain rooms at following maximum sound levels, in Room Criteria (RC) Mark II as defined by ASHRAE Handbook., HVAC Applications.
1. Offices
   a. Executive: 25
   b. Conference rooms: 25
   c. Private: 30
   d. Open-plan areas: 35

1.4 SUBMITTALS

A. Division 01 - Submittal Procedures: Submittal procedures.

B. Shop Drawings:

1. Indicate inertia bases and locate vibration isolators, with static and dynamic load on each. Indicate assembly, materials, thickness, dimensional data, pressure losses, acoustical performance, layout, and connection details for sound attenuation products fabricated for this project.

C. Product Data: Submit schedule of vibration isolator type with location and load on each. Submit catalog information indicating, materials, dimensional data, pressure losses, and acoustical performance for standard sound attenuation products.

D. Design Data: Submit calculations indicating maximum room sound levels are not exceeded.

E. Test Reports: Indicate dynamic insertion loss and noise generation values of sound attenuators. acoustic housings meet or exceed specified sound transmission loss values.

F. Manufacturer's Installation Instructions: Submit special procedures and setting dimensions. Indicate installation requirements maintaining integrity of sound isolation.

G. Manufacturer's Certificate: Certify isolators meet or exceed specified requirements.

H. Manufacturer's Field Reports: Indicate sound isolation installation is complete and in accordance with instructions.

1.5 CLOSEOUT SUBMITTALS

A. Section 01 70 00 - Execution and Closeout Requirements: Closeout procedures.

B. Project Record Documents: Record actual locations of sound attenuators, acoustic housings. ductwork lagging. Record actual locations of hangers including attachment points.

1.6 QUALITY ASSURANCE

A. Perform Work in accordance with AMCA 300, ANSI S1.13, ARI 575, ANSI S12.36 standards and recommendations of ASHRAE 68.

1.7 QUALIFICATIONS

A. Manufacturer: Company specializing in manufacturing products specified in this section with minimum five years documented experience.

B. Installer: Company specializing in performing Work of this section with minimum five years documented experience in projects similar in size and complexity..

C. Design application of duct sound attenuators, acoustic housings under direct supervision of Factory providing sound attenuation equipment.

1.8 PRE-INSTALLATION MEETINGS

A. Division 01 - Administrative Requirements: Pre-installation meeting.

B. Convene minimum one week prior to commencing work of this section.

1.9 FIELD MEASUREMENTS

A. Verify field measurements prior to fabrication.

1.10 WARRANTY

A. Division 01 - Execution and Closeout Requirements: Product warranties and product bonds.

PART 2 PRODUCTS

2.1 VIBRATION ISOLATORS

A. Manufacturers:
1. BRD Noise & Vibration Control, Inc.
2. California Dynamics Corporation.
3. Isolation Technology, Inc.
4. Kinetics Noise Control, Inc.
5. Mason Industries, Inc.
6. Taylor Devices, Inc.
7. Vibration Isolation.
8. Vibro-Acoustics.
9. VMC Group.
10. Substitutions: Not Permitted.

B. Open Spring Isolators:
1. Spring Isolators:
a. For Exterior and Humid Areas: Furnish hot dipped galvanized housings and neoprene coated springs.
b. Code: Color code springs for load carrying capacity.
2. Springs: Minimum horizontal stiffness equal to 75 percent vertical stiffness, with working deflection between 0.3 and 0.6 of maximum deflection.
3. Spring Mounts: Furnish with leveling devices, minimum 0.25 inch thick neoprene sound pads, and zinc chromate plated hardware.
4. Sound Pads: Size for minimum deflection of 0.05 inch; meet requirements for neoprene pad isolators.

C. Restrained Spring Isolators:
1. Spring Isolators:
a. For Exterior and Humid Areas: Furnish hot dipped galvanized housings and neoprene coated springs.
b. Code: Color code springs for load carrying capacity.
2. Springs: Minimum horizontal stiffness equal to 75 percent vertical stiffness, with working deflection between 0.3 and 0.6 of maximum deflection.
3. Spring Mounts: Furnish with leveling devices, minimum 0.25 inch thick neoprene sound pads, and zinc chromate plated hardware.
4. Sound Pads: Size for minimum deflection of 0.05 inch; meet requirements for neoprene pad isolators.
5. Restraint: Furnish mounting frame and limit stops.

D. Closed Spring Isolators:

1. Spring Isolators:
   a. For Exterior and Humid Areas: Furnish hot dipped galvanized housings and neoprene coated springs.
   b. Code: Color code springs for load carrying capacity.
2. Type: Closed spring mount with top and bottom housing separated with neoprene rubber stabilizers.
3. Springs: Minimum horizontal stiffness equal to 75 percent vertical stiffness, with working deflection between 0.3 and 0.6 of maximum deflection.
4. Housings: Incorporate neoprene isolation pad meeting requirements for neoprene pad isolators, and neoprene side stabilizers with minimum 0.25 inch clearance.

E. Restrained Closed Spring Isolators:
1. Spring Isolators:
   a. For Exterior and Humid Areas: Furnish hot dipped galvanized housings and neoprene coated springs.
   b. Code: Color code springs for load carrying capacity.
2. Type: Closed spring mount with top and bottom housing separated with neoprene rubber stabilizers.
3. Springs: Minimum horizontal stiffness equal to 75 percent vertical stiffness, with working deflection between 0.3 and 0.6 of maximum deflection.
4. Housings: Incorporate neoprene isolation pad meeting requirements for neoprene pad isolators, and neoprene side stabilizers with minimum 0.25 inch clearance and limit stops.

F. Spring Hanger:
1. Spring Isolators:
   a. For Exterior and Humid Areas: Furnish hot dipped galvanized housings and neoprene coated springs.
   b. Code: Color code springs for load carrying capacity.
2. Springs: Minimum horizontal stiffness equal to 75 percent vertical stiffness, with working deflection between 0.3 and 0.6 of maximum deflection.
3. Housings: Incorporate neoprene isolation pad meeting requirements for neoprene pad isolators.
4. Misalignment: Capable of 20 degree hanger rod misalignment.

G. Neoprene Pad Isolators:
1. Rubber or neoprene-waffle pads.
   a. 30 durometer.
   b. Minimum 1/2 inch thick.
   c. Maximum loading 40 psi.
   d. Height of ribs: not to exceed 0.7 times width.
2. Configuration: Single layer.

H. Rubber Mount or Hanger: Molded rubber designed for 0.5 inches deflection with threaded insert.

I. Glass Fiber Pads: Neoprene jacketed pre-compressed molded glass fiber.

2.2 DUCT SOUND ATTENUATORS

A. Manufacturers:
1. Dynasonics.

2. IAC.
3. Metalform Manufacturing, Inc.
4. McGill AirSilence LLC.
5. Substitutions: Not Permitted.

B. General: Furnish and install factory pre-fabricated duct silencers of the types and sizes shown on the plans and/or listed in the schedule. Any change or exception to this specification must be submitted and approved in writing by the Engineer at least 10 days before the bid date.

C. Fire Performance: Combustion ratings for the acoustic fill shall not be greater than the following when tested in accordance with ASTM E84, NFPA Standard 255, or UL No. 723:

Flame Spread Classification – 25
Smoke Development Rating – 50

D. Rectangular Silencers**:** Outer casing shall be not less than ASTM A653/653M, 22 gauge, die-formed, type G60 galvanized lock former quality steel.

E. Tubular Silencers: Outer casings shall be fabricated from type ASTM A653/653M, G60 galvanized lock former quality steel, in the following gauges:
12-36 inches: 22 gauge.
37-60 nches: 18 gauge.

F. Interior partitions for rectangular silencers shall be fabricated from not less than ASTM A653/653M, 26 gauge, die-formed, type G60 galvanized lock former quality perforated steel.

G. Interior partitions for tubular silencers shall be fabricated from not less than ASTM A653/653M, 22 gauge, die-formed, type G60 galvanized lock former quality perforated steel.

H. Fill Material:

1) Dissipative and Film Lined silencers: Fill material shall be recycled material made from post-industrial natural cotton fibers and treated with an EPA registered fungal inhibitor to actively resist the growth of mold, fungi and bacteria. Material shall not contain any formaldehydes or Volatile Organic Compounds (VOC's) in order to prevent off-gassing.

2) Media Protection:

a) Dissipative (Tubular) silencers: Where indicated on the silencer schedule, fill material shall be encased in a fiberglass cloth to prevent erosion of fill material into the airstream.

b) Rectangular Models: Fill material shall be encased and sealed with a thin layer of polymeric film membrane.

I. Construction:

1) Units shall be constructed in accordance with the ASHRAE Guide recommendations for high pressure ductwork. Seams shall be lock formed and mastic filled. Rectangular casing seams shall be in the corners of the silencer shell to provide maximum unit strength and rigidity. Interior partitions shall be fabricated from single piece, perforated sheets and shall have die-formed entrance and exit shapes so as to provide the maximum aerodynamic efficiency and minimum self-noise characteristics in the duct silencer. Blunt noses or squared off partitions will not be accepted.

2) Attachment of interior partitions to the casing shall be by means of an interlocking track assembly. Tracks shall be solid galvanized steel and shall be permanently attached to the outer casing. Attachment of the interior partitions to the tracks shall be such that a minimum of 4 thicknesses of metal exists at this location. The track assembly shall stiffen the exterior casing, provide a reinforced attachment detail for the interior partitions, and shall maintain a uniform airspace width along the length of the silencer for consistent aerodynamic and acoustic performance.

3) Interior partitions shall be additionally secured to the outer casing with permanently attached nose clips at both ends of the duct silencer.

4) The silencer side sheet casings shall be undersized in comparison to the height of the interior perforated acoustic splitters to maintain a tight seam between the splitters and the silencer casing.

5) Attachment of interior partitions for tubular silencers shall be secured with galvanized steel radial mounting brackets welded to the partition and the outer casing. The radial brackets shall be installed at 90 degree angles to each other to assure uniform spacing for consistent aerodynamic and acoustic performance.

6) All interior partitions shall be located to provide a minimum 1” perimeter clearance at both ends of the silencer shell so as to allow for the field installation of “duct-mate” or similar flanging when required.

7) Sound attenuating units shall not fail structurally when subjected to a differential air pressure of 8 inches water gauge from inside to outside the casing.

8) Airtight construction when required shall be provided by use of a duct sealing compound on the jobsite, material and labor furnished by the contractor.

9) Duct Transitions: When transitions are required to adapt silencer dimensions to connecting ductwork, they shall be furnished by the installing contractor.

2.3 Duct Silencers – Source Quality Control

A. Acoustic Performance:

1. All silencer ratings shall be determined in a duct-to-reverberant room test facility, which provides for airflow in both directions through the test silencer in accordance with ASTM Specification E477.

2. The test set-up and procedure shall be such that all effects due to end reflection, directivity, flanking transmission, standing waves and test chamber sound absorption are eliminated.

3. Acoustic ratings shall include Dynamic Insertion Los (DIL) and Generated Noise (GN) Power Levels both for FORWARD FLOW (air and noise in same direction) and REVERSE FLOW (air and noise in opposite directions) with airflow of at least 2000fpm entering face velocity. Data for rectangular silencers shall be presented for tests conducted using silencers no smaller than the following cross sections: Rectangular, in. – 24 x 24, 24 x 30, or 24 x 36.

B. Aerodynamic Performance: Static pressure loss of silencers shall not exceed those listed in the silencer schedule at the airflow indicated. Airflow measurements shall be made in accordance with ASTM Specification E477 and in a NVLAP accredited laboratory. Tests shall be reported on the identical units for which acoustic data is presented. Static pressure loss measurements shall be taken in the same set-up and at the same time as DIL and GN.

PART 3 EXECUTION

3.1 EXAMINATION

A. Division 01 - Administrative Requirements: Coordination and project conditions.

B. Verify equipment, ductwork and piping is installed before work in this section is started.

3.2 INSTALLATION

A. Support duct sound attenuators rigidly and independent of ductwork in accordance with manufacturer's instructions. Refer to Section 23 33 00.

B. Install isolation for motor driven equipment.

C. Bases:
   1. Set steel bases for 1 inch clearance between housekeeping pad and base.
   2. Set concrete inertia bases for 2 inch clearance between housekeeping pad and base.

D. Adjust equipment level.

E. Install spring hangers without binding.

F. On closed spring isolators, adjust so side stabilizers are clear under normal operating conditions.

G. Prior to making piping connections to equipment with operating weights substantially different from installed weights, block up equipment with temporary shims to final height. When full load is applied, adjust isolators to load to allow shim removal.

H. Provide pairs of horizontal limit springs on fans with more than 6.0 inch static pressure, and on hanger supported, horizontally mounted axial fans.

I. Support piping connections to isolated equipment resiliently as follows:

1. Up to 4 inch Diameter: First three points of support.
2. 5 to 8 inch Diameter: First four points of support.
3. 10 inch Diameter and Over: First six points of support.
4. Select three hangers closest to vibration source for minimum 1.0 inch static deflection or static deflection of isolated equipment. Select remaining isolators for minimum 1.0 inch static deflection or 1/2 static deflection of isolated equipment.

3.3 FIELD QUALITY CONTROL

A. Division 01 - Quality Requirements.

B. Inspect isolated equipment after installation and submit report. Include static deflections.

C. After start-up, final corrections and balancing of systems take octave band sound measurements over full audio frequency range in areas adjacent to mechanical equipment rooms, duct and pipe shafts, and other critical locations. Provide one-third octave band measurements of artificial sound sources in areas indicated as having critical requirements. Submit complete report of test results including sound curves.

D. Furnish services of testing agency to take noise measurement. Use meters meeting requirements of ANSI S1.4.

END OF SECTION

SECTION 23 05 53 - IDENTIFICATION FOR HVAC PIPING AND EQUIPMENT

PART 1 GENERAL

1.1 SUMMARY

A. Section Includes:
1. Nameplates.
2. Tags.
3. Pipe markers.
4. Ceiling tacks.
5. Labels.
6. Lockout devices.

B. Related Sections:
1. Section 09 90 00 - Painting and Coating: Execution requirements for painting specified by this section.

1.2 REFERENCES

A. American Society of Mechanical Engineers:
1. ASME A13.1 - Scheme for the Identification of Piping Systems.

1.3 SUBMITTALS

A. Section 01 33 00 - Submittal Procedures: Submittal procedures.

B. Product Data: Submit manufacturers catalog literature for each product required.

C. Shop Drawings: Submit list of wording, symbols, letter size, and color coding for mechanical identification and valve chart and schedule, including valve tag number, location, function, and valve manufacturer's name and model number.

D. Manufacturer's Installation Instructions: Indicate installation instructions, special procedures, and installation.

E. Manufacturer's Certificate: Certify products meet or exceed specified requirements.

1.4 CLOSEOUT SUBMITTALS

A. Section 01 70 00 - Execution and Closeout Requirements: Closeout procedures.

B. Project Record Documents: Record actual locations of tagged valves; include valve tag numbers.

1.5 QUALITY ASSURANCE

A. Conform to ASME A13.1 for color scheme for identification of piping systems and accessories.

1.6 FIELD MEASUREMENTS

A. Verify field measurements prior to fabrication.

1.7 PRE-INSTALLATION MEETINGS

A. Division 01 - Administrative Requirements: Pre-installation meeting.

B. Convene minimum one week prior to commencing work of this section.

1.8 FIELD MEASUREMENTS

A. Verify field measurements prior to fabrication.

PART 2 PRODUCTS

2.1 NAMEPLATES

A. Manufacturers:
1. Craftmark Identification Systems.
2. Safety Sign Co.
3. Seton Identification Products.
4. Substitutions: Not Permitted.

B. Product Description: Laminated three-layer plastic with engraved black letters on light contrasting background color.

2.2 TAGS

A. Metal Tags: Brass with stamped letters; tag size minimum 1-1/2 inches diameter with finished edges.

B. Information Tags: Clear plastic with printed "Danger," "Caution," or "Warning" and message; size 3-1/4 x 5-5/8 inches with grommet and self-locking nylon ties.

C. Tag Chart: Typewritten letter size list of applied tags and location plastic laminated.

2.3 PIPE MARKERS

A. Color and Lettering: Conform to ASME A13.1.

B. Plastic Pipe Markers:
1. Factory fabricated, flexible, semi-rigid plastic, preformed to fit around pipe or pipe covering. Larger sizes may have maximum sheet size with spring fastener.

C. Plastic Tape Pipe Markers:
1. Flexible, vinyl film tape with pressure sensitive adhesive backing and printed markings.

D. Plastic Underground Pipe Markers:
1. Bright colored continuously printed plastic ribbon tape, minimum 6 inches wide by 4 mil thick, manufactured for direct burial service.

2.4 CEILING TACKS

A. Description: Steel with 3/4 inch diameter color-coded head.

B. Color code as follows:
1. HVAC equipment: Yellow.
2. Fire dampers/smoke dampers: Red.
3. Plumbing valves: Green.
4. Heating/cooling valves: Blue.

2.5 LABELS

A. Manufacturers:
1. Brady Worldwide, Inc.
2. Brimar Industries, Inc.
3. Craftmark Identification Systems.
4. Seton Identification Products.
5. Substitutions: Not Permitted.

B. Description: Aluminum or Laminated Mylar, size 1.9 x 0.75 inches, adhesive backed with printed identification and bar code.

2.6 UNDERGROUND WARNING TAPE

A. Description: Polyethylene tape with metallic core for detection and location of piping with metal detector resistant to acids, alkalis and other soil components.
1. Size: 0.004 inch6 inches Printed text as selected by Architect/Engineer in black contrasting color and repeated at maximum 40 inches intervals.

2.7 LOCKOUT DEVICES

A. Lockout Hasps:
1. Anodized aluminum hasp with erasable label surface; size minimum 7-1/4 x 3 inches.

B. Valve Lockout Devices:
1. Nylon device preventing access to valve operator, accepting lock shackle.

PART 3 EXECUTION

3.1 PREPARATION

A. Degrease and clean surfaces to receive adhesive for identification materials.

B. Prepare surfaces in accordance with Section 09 90 00 for stencil painting.

3.2 INSTALLATION

A. Install identifying devices after completion of coverings and painting.

B. Install plastic nameplates with corrosive-resistant mechanical fasteners, or adhesive.

C. Install labels with sufficient adhesive for permanent adhesion and seal with clear lacquer. For unfinished canvas covering, apply paint primer before applying labels.

D. Install tags using corrosion resistant chain. Number tags consecutively by location.

E. Install underground plastic pipe markers 6 to 8 inches below finished grade, directly above buried pipe.

F. Identify air handling units, pumps, heat transfer equipment, tanks, and water treatment devices with plastic nameplates. Identify in-line pumps and other small devices with tags.

G. Identify control panels and major control components outside panels with plastic nameplates.

H. Identify valves in main and branch piping with tags.

I. Identify air terminal units and radiator valves with numbered tags.

J. Tag automatic controls, instruments, and relays. Key to control schematic.

K. Identify piping, concealed or exposed, with plastic tape pipe markers. Use tags on piping 3/4 inch diameter and smaller. Identify service, flow direction, and pressure. Install in clear view and align with axis of piping. Locate identification not to exceed 20 feet on straight runs including risers and drops, adjacent to each valve and tee, at each side of penetration of structure or enclosure, and at each obstruction.

L. For exposed natural gas lines other than steel pipe, attach yellow pipe labels with "GAS" in black lettering, at maximum 5 foot spacing.

M. Identify ductwork with plastic nameplates. Identify with air handling unit identification number and area served. Locate identification at air handling unit, at each side of penetration of structure or enclosure, and at each obstruction.

N. Provide ceiling tacks to locate valves or dampers above T-bar type panel ceilings. Locate in corner of panel closest to equipment.

END OF SECTION

SECTION 23 05 93 - TESTING, ADJUSTING, AND BALANCING FOR HVAC

PART 1 GENERAL

1.1 SUMMARY

A. Section Includes:
1. Testing adjusting, and balancing of air systems.
2. Testing adjusting, and balancing of hydronic and refrigerating systems.
3. Measurement of final operating condition of HVAC systems.
4. Sound measurement of equipment operating conditions.
5. Vibration measurement of equipment operating conditions.

B. Related Sections:
1. Section 23 09 23 - Direct-Digital Control System for HVAC: Requirements for coordination between DDC system and testing, adjusting, and balancing work.
2. Section 23 09 93 - Sequence of Operations for HVAC Controls: Sequences of operation for HVAC equipment.

1.2 REFERENCES

A. Associated Air Balance Council:
1. AABC MN-1 - National Standards for Testing and Balancing Heating, Ventilating, and Air Conditioning Systems.

B. American Society of Heating, Refrigerating and Air-Conditioning Engineers:
1. ASHRAE 111 - Practices for Measurement, Testing, Adjusting and Balancing of Building Heating, Ventilation, Air-Conditioning and Refrigeration Systems.

C. Natural Environmental Balancing Bureau:
1. NEBB - Procedural Standards for Testing, Adjusting, and Balancing of Environmental Systems.

D. Testing Adjusting and Balancing Bureau:
1. TABB - International Standards for Environmental Systems Balance.

1.3 SUBMITTALS

A. Division 01 - Submittal Procedures: Submittal procedures.

B. Prior to commencing Work, submit proof of latest calibration date of each instrument.

C. Test Reports: Indicate data on AABC MN-1 National Standards for Total System Balance forms, forms prepared following ASHRAE 111, NEBB Report forms, TABB Report Forms or forms containing information indicated in Schedules.

D. Field Reports: Indicate deficiencies preventing proper testing, adjusting, and balancing of systems and equipment to achieve specified performance.

E. Prior to commencing Work, submit report forms or outlines indicating adjusting, balancing, and equipment data required. Include detailed procedures, agenda, sample report forms

F. Submit draft copies of report for review prior to final acceptance of Project.

G. Furnish reports in letter size, 3-ring binder manuals, complete with table of contents page and indexing tabs, with cover identification at front and side. Include set of reduced drawings with air outlets and equipment identified to correspond with data sheets, and indicating thermostat locations.

H. Submit a complete test report certified correct by an officer of the Testing Adjusting and Balancing Agency. The report shall be bound and shall contain the following:
   1. Title Page.
   2. Certificate verifying that the testing and balancing has been done in accordance with the specifications and the results achieved are correct.
   3. System diagrams.
   4. Recommended testing procedures.
   5. Test reports for systems and equipment on AABC or NEBB standard forms.
   6. Instrument calibration reports.
   7. Control system verification report.

1.4 CLOSEOUT SUBMITTALS

A. Division 01 - Execution and Closeout Requirements: Closeout procedures.

B. Project Record Documents: Record actual locations of flow measuring stations, balancing valves and rough setting.

C. Operation and Maintenance Data: Furnish final copy of testing, adjusting, and balancing report inclusion in operating and maintenance manuals.

1.5 QUALITY ASSURANCE

A. Perform Work in accordance with AABC MN-1 National Standards for Field Measurement and Instrumentation, Total System Balance, ASHRAE 111, NEBB Procedural Standards for Testing, Balancing and Adjusting of Environmental Systems, or TABB International Quality Assurance program.

B. Prior to commencing Work, calibrate each instrument to be used.

C. All testing and balancing shall be done by an independent Test and Balance Agency that specializes in the testing and balancing of heating, ventilating and air conditioning systems. The firm shall not be affiliated with the contractor, controls, or equipment supplier.

D. The Test and Balance Firm shall be certified by AABC or NEBB to perform air, hydronics, sound and vibration measurements.

E. All work shall be done under the direct supervision of a Test and Balance Supervisor, who is certified by AABC or NEBB to perform air, hydronics, sound and vibration measurements.

F. The environmental systems including all equipment, apparatus and distribution systems shall be tested, adjusted and balanced in accordance with the latest edition of the NEBB Procedural Standards for Testing, Adjusting and Balancing of Environmental Systems or the AABC National Standards except where superseded by these specifications.

G. Instruments used in all HVAC systems and equipment tests shall be as recommended by the AABC, AMCA, ASHRAE, NEBB, or as approved by the Engineer. Test instruments used shall be initially checked and periodically checked thereafter to verify their calibration accuracy. Verification of the calibration of each instrument required for a test is to be provided with each test report.

H. All test equipment shall be furnished by the Contractor and shall remain his property.

1.6 QUALIFICATIONS

A. Agency: Company specializing in testing, adjusting, and balancing of systems specified in this section with minimum five years documented experience or as approved by the Engineer.

1.7 PRE-INSTALLATION MEETINGS

A. Division 01 - Administrative Requirements: Pre-installation meeting.

B. Convene minimum one week prior to commencing work of this section.

1.8 SEQUENCING

A. Division 01 - Summary: Work sequence.

B. Sequence balancing between completion of systems tested and Date of Substantial Completion.

1.9 SCHEDULING

A. Division 01 - Administrative Requirements: Coordination and project conditions.

1.10 WARRANTY

A. The Test and Balance Agency shall include an extended warranty of 120 days, after final acceptance of the project, during which time the Engineer at his discretion may request a recheck or resetting of any item listed in test report. The firm shall provide technicians to assist the Engineer in making any tests he may require during this period of time.

PART 2 PRODUCTS

Not Used.

PART 3 EXECUTION

3.1 EXAMINATION

A. Division 01 - Administrative Requirements: Coordination and project conditions.

B. The Contractor shall provide to the Test and Balance Agency one (1) set of approved shop drawings on all equipment which will be tested and balanced.

C. The Contractor shall provide all thermometer wells, gauge cocks and test ports required to perform the testing and balancing work.

D. The Test and Balance Supervisor shall review the HVAC design drawings and shop drawings prior to fabrication and installation of the HVAC systems to insure that all of the necessary balancing dampers, valves, test ports, etc. required to test and balance the systems are provided. Such requirements shall be made available to the mechanical contractor for the inclusion and installation during construction without additional cost to the project.

E. The Mechanical Contractor shall keep the Test and Balance Supervisor informed during the construction of the project of major changes made to the HVAC system.

F. The Test and Balance Supervisor will make periodic inspections (as a minimum once per month during the installation of hydronic and duct systems, and once every week during the last month of construction prior to test and balance) to familiarize himself with the project and submit a written report to the Engineer of each visit.

G. Prior to start of T&B, the contractor shall verify systems are complete and operable before commencing work. Verify the following:
   1. Systems are started and operating in safe and normal condition.
   2. HVAC control systems are installed complete and operable.
   3. Proper thermal overload protection is in place for electrical equipment.
   4. Final filters are clean and in place. If required, install temporary media in addition to final filters.
   5. Duct systems are clean of debris.
   6. Fans are rotating correctly.
   7. Fire and volume dampers are in place and open.
   8. Air coil fins are cleaned and combed.
   9. Access doors are closed and duct end caps are in place.
   10. Air outlets are installed and connected.
   11. Duct system leakage is minimized.
   12. Hydronic systems are flushed, filled, and vented.
   13. Pumps are rotating correctly.
   14. Proper strainer baskets are clean and in place or in normal position.
   15. Service and balancing valves are open.

3.2 PREPARATION

A. Furnish instruments required for testing, adjusting, and balancing operations.

B. Make instruments available to Architect/Engineer to facilitate spot checks during testing.

3.3 INSTALLATION TOLERANCES

A. Air Handling Systems: Adjust to within plus 10 percent of design.

B. Air Outlets and Inlets: Adjust total to within plus 10 percent of design to space. Adjust outlets and inlets in space to within plus or minus 10 percent of design.

3.4 ADJUSTING

A. Division 01 - Execution and Closeout Requirements: Testing, adjusting, and balancing.

B. Verify recorded data represents actual measured or observed conditions.

C. Perform pitot traverse measurements of all main and sub-main ducts.

D. Permanently mark settings of valves, dampers, and other adjustment devices allowing settings to be restored. Set and lock memory stops.

E. After adjustment, take measurements to verify balance has not been disrupted. If disrupted, verify correcting adjustments have been made.

F. Report defects and deficiencies noted during performance of services, preventing system balance.

G. Leave systems in proper working order, replacing belt guards, closing access doors, closing doors to electrical switch boxes, and restoring thermostats to specified settings.

H. At final inspection, recheck random selections of data recorded in report. Recheck points or areas as selected and witnessed by Owner.

I. The Test and Balance Agency shall be available for an extended period of 180 days, after final acceptance of the project, during which time the Engineer at his discretion may request a recheck or resetting of any item listed in test report. The firm shall provide technicians to assist the Engineer in making any tests he may require during this period of time.

3.5 AIR SYSTEM PROCEDURE

A. Adjust air handling and distribution systems to obtain required or design supply, return, and exhaust air quantities at site altitude.

B. Make air flow rate measurements in main ducts (Supply, return, and outside air) by Pitot tube traverse of entire cross sectional area of duct.

C. Measure air quantities at air inlets and outlets.

D. Adjust distribution system to obtain:
   1. Space temperatures within 2 degrees F.
   2. Minimal objectionable drafts.

E. Use volume control devices to regulate air quantities only to extent adjustments do not create objectionable air motion or sound levels. Effect volume control by using volume dampers located in ducts.

F. Vary total system air quantities by adjustment of fan speeds. Provide sheave drive changes to vary fan speed. Vary branch air quantities by damper regulation.

G. Provide system schematic with required and actual air quantities recorded at each outlet or inlet.

H. Measure static air pressure conditions on air supply units, including filter and coil pressure drops, and total pressure across fan. Make allowances for 50 percent loading of filters.

I. Adjust outside air automatic dampers, outside air, return air, and exhaust dampers for design conditions.

J. Measure temperature conditions across outside air, return air, and exhaust dampers to check leakage.

K. At modulating damper locations, take measurements and balance at extreme conditions. Balance variable volume systems at maximum airflow rate, full cooling, and at minimum airflow rate, full heating.

L. Measure building static pressure and adjust supply, return, and exhaust air systems to obtain required relationship between each to maintain approximately 0.05 inches inches differential static pressure near building entries.

M. Adjust air quantities with mixing dampers set first for cooling, then heating, then modulating.

N. For variable air volume system powered units set volume controller to airflow setting indicated. Confirm connections properly made and confirm proper operation for automatic variable-air-volume temperature control.

3.6 SCHEDULES

A. Equipment Requiring Testing, Adjusting, and Balancing:
   1. Air Handling Units
   2. Air Coils.
   3. Terminal Heat Transfer Units.
   4. Induction Units.
   5. Evaporative Coolers.
   6. Make-up Air Units and/or Furnaces.
   7. Fans.
   8. Air Filters.
   9. Air Inlets and Outlets.
   10. Infrared Heaters.

B. Report Forms
   1. Title Page:
      a. Name of Testing, Adjusting, and Balancing Agency
      b. Address of Testing, Adjusting, and Balancing Agency
      c. Telephone and facsimile numbers of Testing, Adjusting, and Balancing Agency
      d. Project name
      e. Project location
      f. Project Architect
      g. Project Engineer
      h. Project Contractor
      i. Project altitude
      j. Report date
   2. Summary Comments:
      a. Design versus final performance

b. Notable characteristics of system
c. Description of systems operation sequence
d. Summary of outdoor and exhaust flows to indicate building pressurization
e. Nomenclature used throughout report
f. Test conditions

3. Instrument List:
   a. Instrument
   b. Manufacturer
   c. Model number
   d. Serial number
   e. Range
   f. Calibration date
4. Electric Motors:
   a. Manufacturer
   b. Model/Frame
   c. HP/BHP and kW
   d. Phase, voltage, amperage; nameplate, actual, no load
   e. RPM
   f. Service factor
   g. Starter size, rating, heater elements
   h. Sheave Make/Size/Bore
5. V-Belt Drive:
   a. Identification/location
   b. Required driven RPM
   c. Driven sheave, diameter and RPM
   d. Belt, size and quantity
   e. Motor sheave diameter and RPM
   f. Center to center distance, maximum, minimum, and actual
6. Air Cooled Condenser:
   a. Identification/number
   b. Location
   c. Manufacturer
   d. Model number
   e. Serial number
   f. Entering DB air temperature, design and actual
   g. Leaving DB air temperature, design and actual
   h. Number of compressors
7. Evaporative Cooling Module Data:
   a. Identification/number
   b. Location
   c. Service
   d. Manufacturer
   e. Air flow, design and actual
   f. Entering air DB temperature, design and actual
   g. Entering air WB temperature, design and actual
   h. Leaving air DB temperature, design and actual
   i. Leaving air WB temperature, design and actual
   j. Air pressure drop, design and actual
8. Gas Heating Data (includes testing of Infra-red heaters):
   a. Identification/number
   b. Location

c. Service
d. Manufacturer
e. Air flow, design and actual (Where applicable)
f. Phase, voltage, amperage.
g. Test voltage (each phase).
h. Test amperage (each phase).
i. Entering air temperature, design and actual
j. Leaving air temperature, design and actual
k. Air pressure drop, design and actual (Where applicable)

9. Induction Unit Data:
   a. Manufacturer
   b. Identification/number
   c. Location
   d. Model number
   e. Size
   f. Design air flow
   g. Design nozzle pressure drop
   h. Final nozzle pressure drop
   i. Final air flow
10. Unit Ventilator and Fan Coil Data:
    a. Manufacturer
    b. Identification/number
    c. Location
    d. Model number
    e. Size
    f. Air flow, design and actual
    g. Water flow, design and actual
    h. Water pressure drop, design and actual
    i. Entering water temperature, design and actual
    j. Leaving water temperature, design and actual
    k. Entering air temperature, design and actual
    l. Leaving air temperature, design and actual
11. Air Moving Equipment:
    a. Location
    b. Manufacturer
    c. Model number
    d. Serial number
    e. Arrangement/Class/Discharge
    f. Air flow, specified and actual
    g. Return air flow, specified and actual
    h. Outside air flow, specified and actual
    i. Total static pressure (total external), specified and actual
    j. Inlet pressure
    k. Discharge pressure
    l. Sheave Make/Size/Bore
    m. Number of Belts/Make/Size
    n. Fan RPM
12. Return Air/Outside Air Data:
    a. Identification/location
    b. Design air flow
    c. Actual air flow

d. Design return air flow
e. Actual return air flow
f. Design outside air flow
g. Actual outside air flow
h. Return air temperature
i. Outside air temperature
j. Required mixed air temperature
k. Actual mixed air temperature
l. Design outside/return air ratio
m. Actual outside/return air ratio

13. Exhaust Fan Data:
    a. Location
    b. Manufacturer
    c. Model number
    d. Serial number
    e. Air flow, specified and actual
    f. Total static pressure (total external), specified and actual
    g. Inlet pressure
    h. Discharge pressure
    i. Sheave Make/Size/Bore
    j. Number of Belts/Make/Size
    k. Fan RPM
14. Duct Traverse:
    a. System zone/branch
    b. Duct size
    c. Area
    d. Design velocity
    e. Design air flow
    f. Test velocity
    g. Test air flow
    h. Duct static pressure
    i. Air temperature
    j. Air correction factor
15. Duct Leak Test:
    a. Description of ductwork under test
    b. Duct design operating pressure
    c. Duct design test static pressure
    d. Duct capacity, air flow
    e. Maximum allowable leakage duct capacity times leak factor
    f. Test apparatus
        1) Blower
        2) Orifice, tube size
        3) Orifice size
        4) Calibrated
    g. Test static pressure
    h. Test orifice differential pressure
    i. Leakage
16. Terminal Unit Data:
    a. Manufacturer
    b. Type, constant, variable, single, dual duct
    c. Identification/number

d. Location
e. Model number
f. Size
g. Minimum static pressure
h. Minimum design air flow
i. Maximum design air flow
j. Maximum actual air flow
k. Inlet static pressure

17. Air Distribution Test Sheet:
    a. Air terminal number
    b. Room number/location
    c. Terminal type
    d. Terminal size
    e. Area factor
    f. Design velocity
    g. Design air flow
    h. Test (final) velocity
    i. Test (final) air flow
    j. Percent of design air flow

END OF SECTION

SECTION 23 07 00 - HVAC INSULATION

PART 1 GENERAL

1.1 SUMMARY

A. Section Includes:
1. HVAC piping insulation, jackets and accessories.
2. HVAC equipment insulation, jackets and accessories.
3. HVAC ductwork insulation, jackets, and accessories.

B. Related Sections:
1. Division 07 - Firestopping: Product requirements for firestopping for placement by this section.
2. Division 09 - Painting and Coating: Execution requirements for painting insulation jackets and covering specified by this section.

1.2 REFERENCES

A. ASTM International:
1. ASTM A240/A240M - Standard Specification for Chromium and Chromium-Nickel Stainless Steel Plate, Sheet, and Strip for Pressure Vessels and for General Applications.
2. ASTM A666 - Standard Specification for Annealed or Cold-Worked Austenitic Stainless Steel Sheet, Strip, Plate, and Flat Bar.
3. ASTM B209 - Standard Specification for Aluminum and Aluminum-Alloy Sheet and Plate.
4. ASTM C195 - Standard Specification for Mineral Fiber Thermal Insulating Cement.
5. ASTM C449/C449M - Standard Specification for Mineral Fiber Hydraulic-Setting Thermal Insulating and Finishing Cement.
6. ASTM C450 - Standard Practice for Fabrication of Thermal Insulating Fitting Covers for NPS Piping, and Vessel Lagging.
7. ASTM C533 - Standard Specification for Calcium Silicate Block and Pipe Thermal Insulation.
8. ASTM C534 - Standard Specification for Preformed Flexible Elastomeric Cellular Thermal Insulation in Sheet and Tubular Form.
9. ASTM C547 - Standard Specification for Mineral Fiber Pipe Insulation.
10. ASTM C553 - Standard Specification for Mineral Fiber Blanket Thermal Insulation for Commercial and Industrial Applications.
11. ASTM C578 - Standard Specification for Rigid, Cellular Polystyrene Thermal Insulation.
12. ASTM C585 - Standard Practice for Inner and Outer Diameters of Rigid Thermal Insulation for Nominal Sizes of Pipe and Tubing (NPS System).
13. ASTM C591 - Standard Specification for Unfaced Preformed Rigid Cellular Polyisocyanurate Thermal Insulation.
14. ASTM C612 - Standard Specification for Mineral Fiber Block and Board Thermal Insulation.

15. ASTM C795 - Standard Specification for Thermal Insulation for Use in Contact with Austenitic Stainless Steel.
16. ASTM C921 - Standard Practice for Determining the Properties of Jacketing Materials for Thermal Insulation.
17. ASTM C1071 - Standard Specification for Thermal and Acoustical Insulation (Glass Fiber, Duct Lining Material).
18. ASTM C1136 - Standard Specification for Flexible, Low Permeance Vapor Retarders for Thermal Insulation.
19. ASTM C1290 - Standard Specification for Flexible Fibrous Glass Blanket Insulation Used to Externally Insulate HVAC Ducts.
20. ASTM D1785 - Standard Specification for Rigid Poly (Vinyl Chloride) (PVC) Compounds and Chlorinated Poly (Vinyl Chloride) (CPVC) Compounds.
21. ASTM D4637 - Standard Specification for EPDM Sheet Used in Single-Ply Roof Membrane.
22. ASTM E96/E96M - Standard Test Methods for Water Vapor Transmission of Materials.
23. ASTM E162 - Standard Test Method for Surface Flammability of Materials Using a Radiant Heat Energy Source.

B. Sheet Metal and Air Conditioning Contractors':
1. SMACNA - HVAC Duct Construction Standard - Metal and Flexible.

1.3 SUBMITTALS

A. Division 01 - Submittal Procedures: Submittal procedures.

B. Product Data: Submit product description, thermal characteristics and list of materials and thickness for each service, and location.

C. Manufacturer's Installation Instructions: Submit manufacturers published literature indicating proper installation procedures.

D. Manufacturer's Certificate: Certify products meet or exceed specified requirements.

1.4 QUALITY ASSURANCE

A. Test pipe insulation for maximum flame spread index of 25 and maximum smoke developed index of not exceeding 50 in accordance with ASTM E84.

B. Pipe insulation manufactured in accordance with ASTM C585 for inner and outer diameters.

C. Factory fabricated fitting covers manufactured in accordance with ASTM C450.

D. Duct insulation, Coverings, and Linings: Maximum 25/50 flame spread/smoke developed index, when tested in accordance with ASTM E84, using specimen procedures and mounting procedures of ASTM E 2231.

1.5 QUALIFICATIONS

A. Applicator: Company specializing in performing Work of this section with minimum three years documented experience.

1.6 DELIVERY, STORAGE, AND HANDLING

A. Division 01 - Product Requirements: Requirements for transporting, handling, storing, and protecting products.

B. Accept materials on site in original factory packaging, labeled with manufacturer's identification, including product density and thickness.

C. Protect insulation from weather and construction traffic, dirt, water, chemical, and damage, by storing in original wrapping.

1.7 ENVIRONMENTAL REQUIREMENTS

A. Division 01 - Product Requirements: Environmental conditions affecting products on site.

B. Install insulation only when ambient temperature and humidity conditions are within range recommended by manufacturer.

C. Maintain temperature before, during, and after installation for minimum period of 24 hours.

1.8 FIELD MEASUREMENTS

A. Verify field measurements prior to fabrication.

1.9 WARRANTY

A. Division 01 - Execution and Closeout Requirements: Product warranties and product bonds.

B. Furnish five-year manufacturer warranty for man made fiber.

PART 2 PRODUCTS

2.1 MANUFACTURER

A. Manufacturers for Glass Fiber and Mineral Fiber Insulation Products:
1. CertainTeed.
2. Knauf.
3. Johns Manville.
4. Owens Corning.
5. Substitutions: not permitted without prior approval.

2.2 PIPE INSULATION

A. TYPE P-1: ASTM C547, molded glass fiber pipe insulation.
1. Thermal Conductivity: 0.23 at 75 degrees F.
2. Operating Temperature Range: 0 to 850 degrees F.
3. Vapor Barrier Jacket: ASTM C1136, Type I, factory applied reinforced foil kraft with self-sealing adhesive joints.
4. Jacket Temperature Limit: minus 20 to 150 degrees F.TYPE P-2 Use on pipe sizes 10” or larger: ASTM C612; semi-rigid, fibrous glass board noncombustible, end grain adhered to jacket.
5. Thermal Conductivity: 0.27 at 75 degrees F.
6. Operating Temperature Range: 0 to 650 degrees F.
7. Vapor Barrier Jacket: ASTM C1136, Type II, factory applied reinforced foil kraft with self-sealing adhesive joints.
8. Jacket Temperature Limit: minus 20 to 150 degrees F.

2.3 PIPE INSULATION JACKETS

A. Vapor Retarder Jacket:
1. ASTM C921, white Kraft paper with glass fiber yarn, bonded to aluminized film.
2. Water Vapor Permeance: ASTM E96/E96M; 0.02 perms.

B. PVC Plastic Pipe Jacket:
1. Product Description: ASTM D1785, One piece molded type fitting covers and sheet material, off-white color.
2. Thickness: 10 mil.
3. Connections: Brush on welding adhesive.Aluminum Pipe Jacket (To be used on Piping from floor up to 6 feet above finished floor level in Central Plant:
4. ASTM B209.
5. Thickness: 0.016 inch thick sheet.
6. Finish: Smooth.
7. Joining: Longitudinal slip joints and 2 inch laps.
8. Fittings: 0.016 inch thick die shaped fitting covers with factory attached protective liner.
9. Metal Jacket Bands: 1/2 inch wide; 0.015 inch thick aluminum.

2.4 PIPE INSULATION ACCESSORIES

A. Vapor Retarder Lap Adhesive: Compatible with insulation.

B. Covering Adhesive Mastic: Compatible with insulation.

C. Piping 1-1/2 inches diameter and smaller: Galvanized steel insulation protection shield. MSS SP-69, Type 40. Length: Based on pipe size and insulation thickness.

D. Piping 2 inches diameter and larger: Wood insulation saddle, hard maple. Inserts length: not less than 6 inches long, matching thickness and contour of adjoining insulation.

E. Adhesives: Compatible with insulation.

2.5 EQUIPMENT INSULATION

A. TYPE E-1: ASTM C553; glass fiber, flexible or semi-rigid, noncombustible.
1. Thermal Conductivity: 0.24 at 75 degrees F.
2. Operating Temperature Range: 0 to 450 degrees F.
3. Density: 1.5 pound per cubic foot.

2.6 EQUIPMENT INSULATION JACKETS

A. Aluminum Equipment Jacket (To be used for Air Separators outside of the building envelope):
1. ASTM B209 Thickness: 0.016 inch thick sheet.
2. Finish: Smooth.
3. Joining: Longitudinal slip joints and 2 inch laps.
4. Fittings: 0.016 inch thick die shaped fitting covers with factory attached protective liner.
5. Metal Jacket Bands: 3/8 inch wide; 0.015 inch thick aluminum.

B. Canvas Equipment Jacket: UL listed, 6 oz/sq yd, plain weave cotton fabric with fire retardant lagging adhesive compatible with insulation.

C. Vapor Retarder Jacket:
1. ASTM C921, white Kraft paper with glass fiber yarn, bonded to aluminized film.
2. Water Vapor Permeance: ASTM E96/E96M; 0.02 perms.Indoor Vapor Retarder Finish (For all equipment inside Central Plant):
a. Cloth: Untreated; 9 oz/sq yd weight.
b. Vinyl emulsion type acrylic, compatible with insulation, white color.

2.7 EQUIPMENT INSULATION ACCESSORIES

A. Vapor Retarder Lap Adhesive: Compatible with insulation.

B. Covering Adhesive Mastic: Compatible with insulation.

C. Tie Wire: 0.048 inch stainless steel with twisted ends on maximum 12 inch centers.

D. Mineral Fiber Hydraulic-Setting Thermal Insulating and Finishing Cement: ASTM C449/C449M.

E. Adhesives: Compatible with insulation.

2.8 DUCTWORK INSULATION

A. TYPE D-1: ASTM C1290, Type III, flexible glass fiber, commercial grade with factory applied reinforced aluminum foil jacket meeting ASTM C1136, Type II.
1. Thermal Conductivity: 0.2 at 75 degrees F.
2. Maximum Operating Temperature: 250 degrees F.
3. Density: 6 pound per cubic foot.

2.9 DUCTWORK INSULATION JACKETS: Membrane Duct Jacket (For Exterior Ducts): ASTM D4637; Type I, EPDM; non-reinforced, 0.045 inch thick, 48 inch wide roll; white color.

2.10 DUCTWORK INSULATION ACCESSORIES

A. Vapor Retarder Tape:
1. Kraft paper reinforced with glass fiber yarn and bonded to aluminized film, with pressure sensitive rubber based adhesive.

B. Vapor Retarder Lap Adhesive: Compatible with insulation.

C. Adhesive: Waterproof , ASTM E162 fire-retardant type.

D. Liner Fasteners: Galvanized steel, self-adhesive pad with integral head.

E. Tie Wire: 0.048 inch stainless steel with twisted ends on maximum 12 inch centers.

F. Lagging Adhesive: Fire retardant type with maximum 25/450 flame spread/smoke developed index when tested in accordance with ASTM E84.

G. Impale Anchors: Galvanized steel, 12 gage self-adhesive pad.

H. Adhesives: Compatible with insulation.

I. Membrane Adhesives: As recommended by membrane manufacturer.

PART 3 EXECUTION

3.1 EXAMINATION

A. Division 01 - Administrative Requirements: Coordination and project conditions.

B. Verify piping, equipment, and ductwork has been tested before applying insulation materials.

C. Verify surfaces are clean and dry, with foreign material removed.

3.2 INSTALLATION - PIPING SYSTEMS

A. Piping Exposed to View in Finished Spaces: Locate insulation and cover seams in least visible locations.

B. Continue insulation through penetrations of building assemblies or portions of assemblies having fire resistance rating of one hour or less. Provide intumescent firestopping when continuing insulation through assembly. Finish at supports, protrusions, and interruptions. Refer to Division 07 for penetrations of assemblies with fire resistance rating greater than one hour.

C. Piping Systems Conveying Fluids Below Ambient Temperature:
1. Insulate entire system including fittings, valves, unions, flanges, strainers, flexible connections, [pump bodies,] and expansion joints.
2. Furnish factory-applied or field-applied vapor retarder jackets. Secure factory-applied jackets with pressure sensitive adhesive self-sealing longitudinal laps and butt strips. Secure field-applied jackets with outward clinch expanding staples and seal staple penetrations with vapor retarder mastic.
3. Insulate fittings, joints, and valves with molded insulation of like material and thickness as adjacent pipe. Finish with glass cloth and vapor retarder adhesive or PVC fitting covers.

D. Glass Fiber Board Insulation:
1. Apply insulation close to equipment by grooving, scoring, and beveling insulation. Fasten insulation to equipment with studs, pins, clips, adhesive, wires, or bands.
2. Fill joints, cracks, seams, and depressions with bedding compound to form smooth surface. On cold equipment, use vapor retarder cement.
3. Cover wire mesh or bands with cement to a thickness to remove surface irregularities.

E. Hot Piping Systems less than 140 degrees F:
1. Furnish factory-applied or field-applied standard jackets. Secure with outward clinch expanding staples or pressure sensitive adhesive system on standard factory-applied jacket and butt strips or both.
2. Insulate fittings, joints, and valves with insulation of like material and thickness as adjoining pipe. Finish with glass cloth and adhesive or PVC fitting covers.
3. Do not insulate unions and flanges at equipment, but bevel and seal ends of insulation at such locations.

F. Hot Piping Systems greater than 140 degrees F:
1. Furnish factory-applied or field-applied standard jackets. Secure with outward clinch expanding staples or pressure sensitive adhesive system on standard factory-applied jacket and butt strips or both.
2. Insulate fittings, joints, and valves with insulation of like material and thickness as adjoining pipe. Finish with glass cloth and adhesive or PVC fitting covers.
3. Insulate flanges and unions at equipment.

G. Inserts and Shields:
1. Piping 1-1/2 inches Diameter and Smaller: Install galvanized steel shield between pipe hanger and insulation.
2. Piping 2 inches Diameter and Larger: Install insert between support shield and piping and under finish jacket.
   a. Insert Configuration: Minimum 6 inches long, of thickness and contour matching adjoining insulation; may be factory fabricated.
   b. Insert Material: Compression resistant insulating material suitable for planned temperature range and service.
3. Piping Supported by Roller Type Pipe Hangers: Install galvanized steel shield between roller and inserts.

H. Insulation Terminating Points:
1. Coil Branch Piping 1 inch and Smaller: Terminate hot water piping at union upstream of the coil control valve.
2. Chilled Water Coil Branch Piping: Insulate chilled water piping and associated components up to coil connection.
3. Condensate Piping: Insulate entire piping system and components to prevent condensation.

I. High Temperature Pipe Insulation:
1. Install in multiple layers to meet thickness scheduled.
2. Attach each layer with bands. Secure first layer with bands before installing next layer.
3. Stagger joints between layers.
4. Cover with aluminum jacket with seams located on bottom side of horizontal piping.

J. Pipe Exposed in Mechanical Equipment Rooms or Finished Spaces less than 10 feet above finished floor: Finish with aluminum jacket.

K. Piping Exterior to Building: Provide vapor retarder jacket. Insulate fittings, joints, and valves with insulation of like material and thickness as adjoining pipe, and finish with glass mesh reinforced vapor retarder cement. Cover with aluminum jacket with seams located at 3 or 9 o'clock position on side of horizontal piping with overlap facing down to shed water or on bottom side of horizontal piping.

L. Prepare pipe insulation for finish painting. Refer to Division 09.

3.3 INSTALLATION - EQUIPMENT

A. Factory Insulated Equipment: Do not insulate.

B. Exposed Equipment: Locate insulation and cover seams in least visible locations.

C. Fill joints, cracks, seams, and depressions with bedding compound to form smooth surface. On cold equipment, use vapor retarder cement.

D. Equipment Containing Fluids Below Ambient Temperature:
1. Insulate entire equipment surfaces.
2. Apply insulation close to equipment by grooving, scoring, and beveling insulation. Fasten insulation to equipment with studs, pins, clips, adhesive, wires, or bands.
3. Furnish factory-applied or field-applied vapor retarder jackets. Secure factory-applied jackets with pressure sensitive adhesive self-sealing longitudinal laps and butt strips. Secure field-applied jackets with outward clinch expanding staples and seal staple penetrations with vapor retarder mastic.
4. Finish insulation at supports, protrusions, and interruptions.

E. Equipment Containing Fluids 140 degrees F Or Less:
1. Do not insulate flanges and unions, but bevel and seal ends of insulation.

2. Install insulation with factory-applied or field applied jackets, with or without vapor barrier. Finish with glass cloth and adhesive.
3. Finish insulation at supports, protrusions, and interruptions.

F. Equipment Containing Fluids Over 140 degrees F:
1. Insulate flanges and unions with removable sections and jackets.
2. Install insulation with factory-applied or field applied jackets, with or without vapor barrier. Finish with glass cloth and adhesive.
3. Finish insulation at supports, protrusions, and interruptions.

G. Equipment in Mechanical Equipment Rooms or Finished Spaces: Finish with aluminum jacket.

H. Equipment Located Exterior to Building: Install vapor barrier jacket or finish with glass mesh reinforced vapor barrier cement.

I. Nameplates and ASME Stamps: Bevel and seal insulation around; do not cover with insulation.

J. Equipment Requiring Access for Maintenance, Repair, or Cleaning: Install insulation for easy removal and replacement without damage.

K. Prepare equipment insulation for finish painting. Refer to Section 09 90 00.

3.4 INSTALLATION - DUCTWORK SYSTEMS

A. Duct dimensions indicated on Drawings are finished inside dimensions.

B. Insulated ductwork conveying air below ambient temperature:
1. Provide insulation with vapor retarder jackets.
2. Finish with tape and vapor retarder jacket.
3. Continue insulation through walls, sleeves, hangers, and other duct penetrations.
4. Insulate entire system including fittings, joints, flanges, fire dampers, flexible connections, and expansion joints.

C. Ductwork Exposed in Mechanical Equipment Rooms or Finished Spaces (below 10 feet above finished floor): Finish with aluminum jacket.

D. External Glass Fiber Duct Insulation:
1. Secure insulation with vapor retarder with wires and seal jacket joints with vapor retarder adhesive or tape to match jacket.
2. Secure insulation without vapor retarder with staples, tape, or wires.
3. Install without sag on underside of ductwork. Use adhesive or mechanical fasteners where necessary to prevent sagging. Lift ductwork off trapeze hangers and insert spacers.
4. Seal vapor retarder penetrations by mechanical fasteners with vapor retarder adhesive.
5. Stop and point insulation around access doors and damper operators to allow operation without disturbing wrapping.

E. Duct and Plenum Liner: NOT PERMITTED.

F. Ducts Exterior to Building:
1. Install insulation according to external duct insulation paragraph above.
2. Provide external insulation with vapor retarder jacket. Cover with outdoor jacket as specified above.
3. Finish with membrane duct jacket.
4. Calk seams at flanges and joints. Located major longitudinal seams on bottom side of horizontal duct sections.

G. Prepare duct insulation for finish painting. Refer to Division 09.

3.5 SCHEDULES

A. Cooling Services Piping Insulation Schedule:

Chilled Water Supply and Return [40 to 60 degrees F]	P-1	1-1/4 inches and smaller 1-1/2 inches inch and larger	2.0 2.0
Condensate Piping from Cooling Coils	P-1	All sizes	0.5

B. Heating Services Piping Insulation Schedule:

Heating Water Supply and Return [141 to 200 degrees F]	P-1	3 inches and smaller 4 inches and larger	2.0 2.0

C. Equipment Insulation Schedule:

Chilled Water Pump Bodies	E-1	1.0
Chilled Water/Hot Water Air Separators	E-1	1.0
Chilled Water/Hot Water Expansion Tanks	E-1	1.0
Chiller Cold Surfaces (Not Factory Insulated)	E-1	1.0

D. Ductwork Insulation Schedule:

DUCTWORK SYSTEM	INSULATION TYPE	INSULATION THICKNESS inches
Outside Air Intake	D-1	2.0
Supply Ducts (externally insulated) Thickness indicated is installed thickness.	D-1	2.0

Return Ducts (externally insulated) Thickness indicated is installed thickness.	D-1	2.0
Duct Coils	D-1	2.0
Supply Air, Return Air (exterior to building)	D-1 with duct insulation jacket (2.9)	2.0
Rectangular Supply Ducts Downstream of Variable Air Volume Boxes (externally insulated)	D-1	2.0
Transfer Air Ducts	D-1	2.0

END OF SECTION

23 09 23 - DIRECT-DIGITAL CONTROL SYSTEM FOR HVAC

PART 1: GENERAL

1.1 PRODUCTS INSTALLED BUT NOT FURNISHED UNDER THIS SECTION

A. None

1.2 DESCRIPTION

A. General: The control system shall consist of a high-speed, peer-to-peer network of DDC controllers, a control system server, and a web-based operator interface.

B. System software shall be based on a server/thin client architecture, designed around the open standards of web technology. The control system server shall be accessed using a Web browser over the control system network, the owner's local area network, and (at the owner's discretion) over the Internet. The intent of the thin-client architecture is to provide operators complete access to the control system via a Web browser. No special software other than a web browser shall be required to access graphics, point displays, and trends, configure trends, configure points and controllers, or to download programming into the controllers.

C. System shall use the BACnet protocol for communication to the operator workstation or web server and for communication between control modules. I/O points, schedules, setpoints, trends and alarms specified in 23 09 93 – “Sequence of Operations for HVAC Controls” shall be BACnet objects.

1.3 APPROVED CONTROL SYSTEM MANUFACTURERS

A. The following are approved control system suppliers, manufacturers, and product lines:

Supplier	Manufacturer	Product Line
PC Automated Controls Inc.	Automated Logic Corporation	WebCTRL 6.0

1. The Contractor shall use only operator workstation software, controller software, custom application programming language, and controllers from the corresponding manufacturer and product line. The existing DDC system is Automated Logic WebCTRL 6.0 and shall be installed by the above supplier.

1.4 QUALITY ASSURANCE

A. Installer and Manufacturer Qualifications
1. Installer shall have an established working relationship with Control System Manufacturer.
2. Installer shall have successfully completed Control System Manufacturer’s control system training. Upon request, Installer shall present record of completed training including course outlines.

1.5 CODES AND STANDARDS

A. Work, materials, and equipment shall comply with the most restrictive of local, state, and federal authorities' codes and ordinances or these plans and specifications. As a minimum, the installation shall comply with the current editions in effect 30 days prior to the receipt of bids of the following codes:
1. National Electric Code (NEC)
2. International Building Code (IBC)
   a. Section 719 Ducts and Air Transfer Openings

b. Section 907 Fire Alarm and Detection Systems
c. Section 909 Smoke Control Systems
d. Chapter 28 Mechanical

3. International Mechanical Code (IMC)
4. ANSI/ASHRAE Standard 135, BACnet - A Data Communication Protocol for Building Automation and Control Systems

1.6 SYSTEM PERFORMANCE

A. Performance Standards. System shall conform to the following minimum standards over network connections. Systems shall be tested using manufacturer's recommended hardware and software for operator workstation (server and browser for web-based systems).

1. Graphic Display. A graphic with 20 dynamic points shall display with current data within 10 sec.
2. Graphic Refresh. A graphic with 20 dynamic points shall update with current data within 8 sec.and shall automatically refresh every 15 sec.
3. Configuration and Tuning Screens. Screens used for configuring, calibrating, or tuning points, PID loops, and similar control logic shall automatically refresh within 6 sec.
4. Object Command. Devices shall react to command of a binary object within 2 sec. Devices shall begin reacting to command of an analog object within 2 sec.
5. Alarm Response Time. An object that goes into alarm shall be annunciated at the workstation within 45 sec.
6. Program Execution Frequency. Custom and standard applications shall be capable of running as often as once every 5 sec. Select execution times consistent with the mechanical process under control.
7. Performance. Programmable controllers shall be able to completely execute DDC PID control loops at a frequency adjustable down to once per sec. Select execution times consistent with the mechanical process under control.
8. Multiple Alarm Annunciation. Each workstation on the network shall receive alarms within 5 sec of other workstations.
9. Reporting Accuracy. System shall report values with minimum end-to-end accuracy listed in Table 1.
10. Control Stability and Accuracy. Control loops shall maintain measured variable at setpoint within tolerances listed in Table 2.

Table-1
Reporting Accuracy

Measured Variable	Reported Accuracy
Space Temperature	±0.5ºC (±1ºF)
Ducted Air	±0.5ºC (±1ºF)
Outside Air	±1.0ºC (±2ºF)
Dew Point	±1.5ºC (±3ºF)
Water Temperature	±0.5ºC (±1ºF)
Delta-T	±0.15º (±0.25ºF)
Relative Humidity	±5% RH
Water Flow	±2% of full scale
Airflow (terminal)	±10% of full scale (see Note 1)
Airflow (measuring stations)	±5% of full scale
Airflow (pressurized spaces)	±3% of full scale
Air Pressure (ducts)	±25 Pa (±0.1 in. w.g.)
Air Pressure (space)	±3 Pa (±0.01 in. w.g.)

Water Pressure	±2% of full scale (see Note 2)
Electrical	±1% of reading (see Note 3)
Carbon Monoxide (CO)	±5% of reading
Carbon Dioxide (CO2)	±50 ppm

Note 1: Accuracy applies to 10%–100% of scale
Note 2: For both absolute and differential pressure
Note 3: Not including utility-supplied meters

Table 2
Control Stability and Accuracy

Controlled Variable	Control Accuracy	Range of Medium
Air Pressure	±50 Pa (±0.2 in. w.g.) ±3 Pa (±0.01 in. w.g.)	0–1.5 kPa (0–6 in. w.g.) -25 to 25 Pa (-0.1 to 0.1 in. w.g.)
Airflow	±10% of full scale	
Space Temperature	±1.0ºC (±2.0ºF)	
Duct Temperature	±1.5ºC (±3ºF)	
Humidity	±5% RH	
Fluid Pressure	±10 kPa (±1.5 psi) ±250 Pa (±1.0 in. w.g.)	MPa (1–150 psi) 0–12.5 kPa (0–50 in. w.g.) differential

1.7 SUBMITTALS

A. Product Data and Shop Drawings: Meet requirements of Section 01 30 00 on Shop Drawings, Product Data, and Samples. In addition, the contractor shall provide shop drawings or other submittals on hardware, software, and equipment to be installed or provided. No work may begin on any segment of this project until submittals have been approved for conformity with design intent. Provide drawings as AutoCAD 2006 (or newer) compatible files on magnetic or optical disk (file format: .DWG, .DXF, .VSD, or comparable) and three 11" x 17" prints of each drawing. When manufacturer's cutsheets apply to a product series rather than a specific product, the data specifically applicable to the project shall be highlighted or clearly indicated by other means. Each submitted piece of literature and drawing shall clearly reference the specification and/or drawing that the submittal is to cover. General catalogs shall not be accepted as cutsheets to fulfill submittal requirements. Select and show submittal quantities appropriate to scope of work. Submittal approval does not relieve Contractor of responsibility to supply sufficient quantities to complete work. Submittals shall be provided within 12 weeks of contract award. Submittals shall include:

1. DDC System Hardware
   a. A complete bill of materials to be used indicating quantity, manufacturer, model number, and relevant technical data of equipment to be used.
   b. Manufacturer's description and technical data such as performance curves, product specifications, and installation and maintenance instructions for items listed below and for relevant items not listed below:
      i. Direct digital controllers (controller panels)
      ii. Transducers and transmitters
      iii. Sensors (including accuracy data)
      iv. Actuators
      v. Valves
      vi. Relays and switches
      vii. Control panels
      viii. Power supplies
      ix. Batteries
      x. Operator interface equipment
      xi. Wiring
   c. Wiring diagrams and layouts for each control panel. Show termination numbers.
   d. Schematic diagrams for all field sensors and controllers. Provide floor plans of all sensor locations and control hardware. Riser diagrams showing control network layout, communication protocol, and wire types.
2. Central System Hardware and Software
   a. A complete bill of material of equipment used indicating quantity, manufacturer, model number, and relevant technical.
   b. Manufacturer's description and technical data such as product specifications and installation and maintenance instructions for items listed below and for relevant items furnished under this contract not listed below:
      i. Central Processing Unit (CPU) or web server
      ii. Monitors
      iii. Keyboards
      iv. Power supplies
      v. Battery backups
      vi. Interface equipment between CPU or server and control panels
      vii. Operating System software
      viii. Operator interface software

ix. Color graphic software
x. Third-party software

c. Schematic diagrams for all control, communication, and power wiring. Provide a schematic drawing of the central system installation. Label all cables and ports with computer manufacturers' model numbers and functions. Show interface wiring to control system.
d. Network riser diagrams of wiring between central control unit and control panels.

3. Controlled Systems
   a. Riser diagrams showing control network layout, communication protocol, and wire types.
   b. A schematic diagram of each controlled system. The schematics shall have all control points labeled with point names shown or listed. The schematics shall graphically show the location of all control elements in the system.
   c. A schematic wiring diagram of each controlled system. Label control elements and terminals. Where a control element is also shown on control system schematic, use the same name.
   d. An instrumentation list (Bill of Materials) for each controlled system. List each control system element in a table. Show element name, type of device, manufacturer, model number, and product data sheet number.
   e. A mounting, wiring, and routing plan-view drawing. The design shall take into account HVAC, electrical, and other systems' design and elevation requirements. The drawing shall show the specific location of all concrete pads and bases and any special wall bracing for panels to accommodate this work.
   f. A complete description of the operation of the control system, including sequences of operation. The description shall include and reference a schematic diagram of the controlled system.
   g. A point list for each control system. List I/O points and software points specified in Section 23 09 93. Indicate alarmed and trended points.
4. Quantities of items submitted shall be reviewed but are the responsibility of the Contractor.
5. Description of process, report formats, and checklists to be used in Section 23 09 23 Article 3.17 (Control System Demonstration and Acceptance).
6. BACnet Protocol Implementation Conformance Statement (PICS) for each submitted type of controller and operator interface.

B. Schedules
   1. Within one month of contract award, provide a schedule of the work indicating the following:
      a. Intended sequence of work items
      b. Start date of each work item
      c. Duration of each work item
      d. Planned delivery dates for ordered material and equipment and expected lead times
      e. Milestones indicating possible restraints on work by other trades or situations
   2. Monthly written status reports indicating work completed and revisions to expected delivery dates. Include updated schedule of work.

C. Project Record Documents. Upon completion of installation, submit three copies of record (as-built) documents of the documents shall be submitted for approval prior to final completion and shall include:
   1. Project Record Drawings. As-built versions of submittal shop drawings provided as AutoCAD 2006 (or newer) compatible files on magnetic or optical media (file format: .DWG, .DXF, .VSD, or comparable) and as 11" x 17" prints.
   2. Testing and Commissioning Reports and Checklists. Completed versions of reports, checklists, and trend logs used to meet requirements of Section 23 09 23 Article 3.17 (Control System Demonstration and Acceptance).

3. Operation and Maintenance (O&M) Manual.
4. As-built versions of submittal product data.
5. Names, addresses, and telephone numbers of installing contractors and service representatives for equipment and control systems.
6. Operator's manual with procedures for operating control systems: logging on and off, handling alarms, producing point reports, trending data, overriding computer control, and changing setpoints and variables.
7. Programming manual or set of manuals with description of programming language and syntax, of statements for algorithms and calculations used, of point database creation and modification, of program creation and modification, and of editor use.
8. Engineering, installation, and maintenance manual or set of manuals that explains how to design and install new points, panels, and other hardware; how to perform preventive maintenance and calibration; how to debug hardware problems; and how to repair or replace hardware.
9. Documentation of programs created using custom programming language including setpoints, tuning parameters, and object database. Electronic copies of programs shall meet this requirement if control logic, setpoints, tuning parameters, and objects can be viewed using furnished programming tools.
10. Graphic files, programs, and database on magnetic or optical media.
11. List of recommended spare parts with part numbers and suppliers.
12. Complete original-issue documentation, installation, and maintenance information for furnished third-party hardware including computer equipment and sensors.
13. Complete original-issue copies of furnished software, including operating systems, custom programming language, operator workstation or web server software, and graphics software.
14. Licenses, guarantees, and warranty documents for equipment and systems.
15. Recommended preventive maintenance procedures for system components, including schedule of tasks such as inspection, cleaning, and calibration; time between tasks; and task descriptions.

D. Training Materials: Provide course outline and materials for each class at least six weeks before first class. Training shall be furnished via instructor-led sessions, computer-based training, or web-based training. Engineer will modify course outlines and materials if necessary to meet Owner's needs. Engineer will review and approve course outlines and materials at least three weeks before first class.

1.8 WARRANTY

A. Warrant work as follows:
1. Warrant labor and materials for specified control system free from defects for a period of 12 months after final acceptance. Control system failures during warranty period shall be adjusted, repaired, or replaced at no additional cost or reduction in service to Owner. Respond during normal business hours within 24 hours of Owner's warranty service request.
2. Work shall have a single warranty date, even if Owner receives beneficial use due to early system start-up. If specified work is split into multiple contracts or a multi-phase contract, each contract or phase shall have a separate warranty start date and period.
3. If the engineer determines that equipment and systems operate satisfactorily at the end of final start-up, testing, and commissioning phase, the engineer will certify in writing that control system operation has been tested and accepted in accordance with the terms of this specification. Date of acceptance shall begin warranty period.
4. Provide updates to operator workstation or web server software, project-specific software, graphic software, database software, and firmware that resolve the contractor-identified software deficiencies at no charge during warranty period. If available, Owner can purchase in-warranty service agreement to receive upgrades for functional enhancements associated with above-mentioned items. Do not install updates or upgrades without Owner's written authorization.

5. Exception: Contractor shall not be required to warrant reused devices except those that have been rebuilt or repaired. Installation labor and materials shall be warranted. Demonstrate operable condition of reused devices at time of Engineer's acceptance.

1.9 OWNERSHIP OF PROPRIETARY MATERIAL

A. Project-specific software and documentation shall become Owner's property. This includes, but is not limited to:
   1. Graphics
   2. Record drawings
   3. Database
   4. Application programming code
   5. Documentation

1.10 DEFINITIONS

Term	Definition
BACnet Interoperability Building Blocks (BIBB)	A BIBB defines a small portion of BACnet functionality that is needed to perform a particular task. BIBBS are combined to build the BACnet functional requirements for a device in a specification.
BACnet/BACnet Standard	BACnet communication requirements as defined by the latest version of ASHRAE/ANSI 135 and approved addenda.
Control Systems Server	A computer(s) that maintain(s) the systems configuration and programming database.
Controller	Intelligent stand-alone control device. Controller is a generic reference to building controllers, custom application controllers, and application specific controllers.
Direct Digital Control	Microprocessor-based control including Analog/Digital conversion and program logic.
Gateway	Bi-directional protocol translator connecting control systems that use different communication protocols.
Local Area Network	Computer or control system communications network limited to local building or campus.
Master-Slave/Token Passing	Data link protocol as defined by the BACnet standard.
Point-to-Point	Serial communication as defined in the BACnet standard.
Primary Controlling LAN	High speed, peer-to-peer controller LAN connecting BCs and optionally AACs and ASCs. Refer to System Architecture below.
Protocol Implementation Conformance Statement	A written document that identifies the particular options specified by BACnet that are implemented in a device.
Router	A device that connects two or more networks at the network layer.
Wiring	Raceway, fittings, wire, boxes and related items.

PART 2: PRODUCTS

2.1 MATERIALS

A. Use new products the manufacturer is currently manufacturing and selling for use in new installations. Do not use this installation as a product test site unless explicitly approved in writing by Owner. Spare parts shall be available for at least five years after completion of this contract.

2.2 COMMUNICATION

A. Control products, communication media, connectors, repeaters, hubs, and routers shall comprise a BACnet internetwork. Controller and operator interface communication shall conform to ANSI/ASHRAE Standard 135, BACnet.
B. Install new wiring and network devices as required to provide a complete and workable control network.
C. Use existing Ethernet backbone for network segments marked "existing" on project drawings.
D. Each controller shall have a communication port for temporary connection to a laptop computer or other operator interface. Connection shall support memory downloads and other commissioning and troubleshooting operations.
E. Internetwork operator interface and value passing shall be transparent to internetwork architecture.
    1. An operator interface connected to a controller shall allow the operator to interface with each internetwork controller as if directly connected. Controller information such as data, status, and control algorithms shall be viewable and editable from each internetwork controller.
    2. Inputs, outputs, and control variables used to integrate control strategies across multiple controllers shall be readable by each controller on the internetwork. Program and test all cross-controller links required to execute control strategies specified in Section 23 09 93. An authorized operator shall be able to edit cross-controller links by typing a standard object address or by using a point-and-click interface.
F. Workstations, Building Control Panels, and Controllers with real-time clocks shall use the BACnet Time Synchronization service. System shall automatically synchronize system clocks daily from an operator-designated device via the internetwork. The system shall automatically adjust for daylight saving and standard time as applicable.
G. System shall be expandable to at least twice the required input and output objects with additional controllers, associated devices, and wiring.

2.3 OPERATOR INTERFACE

A. The existing WebCTRL server shall be used
B. Operator Interface. Web server shall reside on high-speed network with building controllers. Each standard browser connected to server shall be able to access all system information.
C. Communication. Web server or workstation and controllers shall communicate using BACnet protocol. Web server or workstation and control network backbone shall communicate using ISO 8802-3 (Ethernet) Data Link/Physical layer protocol and BACnet/IP addressing as specified in ANSI/ASHRAE 135, BACnet Annex J.
D. System Software.
    1. System Graphics. The operator interface software shall be graphically based and shall include at least one graphic per piece of equipment or occupied zone, graphics for each chilled water and hot water system, and graphics that summarize conditions on each floor of each building included in this contract. Indicate thermal comfort on floor plan summary graphics using dynamic colors to represent zone temperature relative to zone setpoint.
        a. Functionality. Graphics shall allow operator to monitor system status, to view a summary of the most important data for each controlled zone or piece of equipment,

to use point-and-click navigation between zones or equipment, and to edit setpoints and other specified parameters.

b. Animation. Graphics shall be able to animate by displaying different image files for changed object status.

c. Alarm Indication. Indicate areas or equipment in an alarm condition using color or other visual indicator.

d. Format. Graphics shall be saved in an industry-standard format such as BMP, JPEG, PNG, or GIF. Web-based system graphics shall be viewable on browsers compatible with World Wide Web Consortium browser standards. Web graphic format shall require no plug-in (such as HTML and JavaScript) or shall only require widely available no-cost plug-ins (such as Active-X and Adobe Flash).

2. Custom Graphics. Custom graphic files shall be created with the use of a graphics generation package furnished with the system. The graphics generation package shall be a graphically based system that uses the mouse to create and modify graphics that are saved in the same formats as are used for system graphics.

3. Graphics Library. Furnish a complete library of standard HVAC equipment graphics such as chillers, boilers, air handlers, terminals, fan coils, and unit ventilators. This library also shall include standard symbols for other equipment including fans, pumps, coils, valves, piping, dampers, and ductwork. The library shall be furnished in a file format compatible with the graphics generation package program.

E. System Applications. System shall provide the following functionality to authorized operators as an integral part of the operator interface or as stand-alone software programs. If furnished as part of the interface, the tool shall be available from each workstation or web browser interface. If furnished as a stand-alone program, software shall be installable on standard IBM-compatible PCs with no limit on the number of copies that can be installed under the system license.

1. Automatic System Database Configuration. Each workstation or web server shall store on its hard disk a copy of the current system database, including controller firmware and software. Stored database shall be automatically updated with each system configuration or controller firmware or software change.

2. Manual Controller Memory Download. Operators shall be able to download memory from the system database to each controller.

3. System Configuration. The workstation software shall provide a method of configuring the system. This shall allow for future system changes or additions by users under proper password protection. Operators shall be able to configure the system.

4. On-Line Help. Provide a context-sensitive, on-line help system to assist the operator in operating and editing the system. On-line help shall be available for all applications and shall provide the relevant data for that particular screen. Additional help information shall be available through the use of hypertext.

5. Security. Each operator shall be required to log on to the system with user name and password in order to view, edit, add, or delete data.

a. Operator Access. The user name and password combination shall define accessible viewing, editing, adding, and deleting privileges for that operator. Users with system administrator rights shall be able to create new users and edit the privileges of all existing users.

b. Automatic Log Out. Automatically log out each operator if no keyboard or mouse activity is detected. This auto logoff time shall be user adjustable.

c. Encrypted Security Data. Store system security data including operator passwords in an encrypted format. System shall not display operator passwords.

6. System Diagnostics. The system shall automatically monitor the operation of all building management panels and controllers. The failure of any device shall be annunciated to the operator.
7. Alarm Processing. System input and status objects shall be configurable to alarm on departing from and on returning to normal state. Operator shall be able to enable or disable each alarm and to configure alarm limits, alarm limit differentials, alarm states, and alarm reactions for each system object. Configure and enable alarm points as specified in Section 23 09 93 (Sequences of Operation). Alarms shall be BACnet alarm objects and shall use BACnet alarm services.
8. Alarm Messages. Alarm messages shall use the English language descriptor for the object in alarm in such a way that the operator will be able to recognize the source, location, and nature of the alarm without relying on acronyms.
9. Alarm Reactions. Operator shall be able to configure (by object) what, if any actions are to be taken during an alarm. As a minimum, the workstation or web server shall be able to log, print, start programs, display messages, send e-mail, send page, and audibly annunciate.
10. Alarm and Event log. Operators shall be able to view all system alarms and changes of state from any location in the system. Events shall be listed chronologically. An operator with the proper security level may acknowledge and delete alarms, and archive closed alarms to the workstation or web server hard disk.
11. Trend Logs. The operator shall be able to configure trend sample or change of value (COV) interval, start time, and stop time for each system data object and shall be able to retrieve data for use in spreadsheets and standard database programs. Controller shall sample and store trend data and shall be able to archive data to the hard disk. Configure trends as specified in Section 23 09 93 (Sequences of Operation). Trends shall be BACnet trend objects.
12. Object and Property Status and Control. Provide a method for the operator to view, and edit if applicable, the status of any object or property in the system. The status shall be available by menu, on graphics, or through custom programs.
13. Reports and Logs. Operator shall be able to select, to modify, to create, and to print reports and logs. Operator shall be able to store report data in a format accessible by standard spreadsheet and word processing programs.
14. Standard Reports. Furnish the following standard system reports:
    a. Objects. System objects and current values filtered by object type, by status (in alarm, locked, normal), by equipment, by geographic location, or by combination of filter criteria.
    b. Alarm Summary. Current alarms and closed alarms. System shall retain closed alarms for an adjustable period.
    c. Logs. System shall log the following to a database or text file and shall retain data for an adjustable period:
        i. Alarm History.
        ii. Trend Data. Operator shall be able to select trends to be logged.
        iii. Operator Activity. At a minimum, system shall log operator log in and log out, control parameter changes, schedule changes, and alarm acknowledgment and deletion. System shall date and time stamp logged activity.
15. Environmental Index. System shall monitor all occupied zones and compile an index that provides a numerical indication of the environmental comfort within the zone. As a minimum, this indication shall be based upon the deviation of the zone temperature from the heating or cooling setpoint. If humidity is being measured within the zone then the environmental index shall be adjusted to reflect a lower comfort level for high or low

humidity levels. Similarly, if carbon dioxide levels are being measured as an indication of ventilation effectiveness then the environmental index shall be adjusted to indicate degraded comfort at high carbon dioxide levels. Other adjustments may be made to the environmental index based upon additional measurements. The system shall maintain a trend of the environmental index for each zone in the trend log. The system shall also compute an average comfort index for every building included in this contract and maintain trendlogs of these building environmental indices. Similarly, the system shall compute the percentage of occupied time that comfortable conditions were maintained within the zones. Through the UI the user shall be able to add a weighting factor to adjust the contribution of each zone to the average index based upon the floor area of the zone, importance of the zone, or other static criteria.

16. Custom Reports. Operator shall be able to create custom reports that retrieve data, including archived trend data, from the system, that analyze data using common algebraic calculations, and that present results in tabular or graphical format. Reports shall be launched from the operator interface.

F. Workstation Application Editors. Each PC or browser workstation shall support editing of all system applications. The applications shall be downloaded and executed at one or more of the controller panels.

1. Controller. Provide a full-screen editor for each type of application that shall allow the operator to view and change the configuration, name, control parameters, and set points for all controllers.
2. Scheduling. An editor for the scheduling application shall be provided at each workstation. Provide a method of selecting the desired schedule and schedule type. Exception schedules and holidays shall be shown clearly on the calendar. The start and stop times for each object shall be adjustable from this interface.
3. Custom Application Programming. Provide the tools to create, edit, debug, and download custom programs. System shall be fully operable while custom programs are edited, compiled, and downloaded. Programming language shall have the following features:
    a. Language. Language shall be graphically based and shall use function blocks arranged in a logic diagram that clearly shows control logic flow. Function blocks shall directly provide functions listed below, and operators shall be able to create custom or compound function blocks.
    b. Programming Environment. Tool shall provide a full-screen, cursor-and-mouse-driven programming environment that incorporates word processing features such as cut and paste. Operators shall be able to insert, add, modify, and delete custom programming code, and to copy blocks of code to a file library for reuse in other control programs.
    c. Independent Program Modules. Operator shall be able to develop independently executing program modules that can disable, enable and exchange data with other program modules.
    d. Debugging and Simulation. Operator shall be able to step through the program observing intermediate values and results. Operator shall be able to adjust input variables to simulate actual operating conditions. Operator shall be able to adjust each step's time increment to observe operation of delays, integrators, and other time-sensitive control logic. Debugger shall provide error messages for syntax and for execution errors.
    e. Conditional Statements. Operator shall be able to program conditional logic using compound Boolean (AND, OR, and NOT) and relational (EQUAL, LESS THAN, GREATER THAN, NOT EQUAL) comparisons.

f. Mathematical Functions. Language shall support floating-point addition, subtraction, multiplication, division, and square root operations, as well as absolute value calculation and programmatic selection of minimum and maximum values from a list of values.

g. Variables. Operator shall be able to use variable values in program conditional statements and mathematical functions.

i. Time Variables. Operator shall be able to use predefined variables to represent time of day, day of the week, month of the year, and date. Other predefined variables or simple control logic shall provide elapsed time in seconds, minutes, hours, and days. Operator shall be able to start, stop, and reset elapsed time variables using the program language.

ii. System Variables. Operator shall be able to use predefined variables to represent status and results of Controller Software and shall be able to enable, disable, and change setpoints of Controller Software as described in Controller Software section.

G. Portable Operator's Terminal. Provide all necessary software to configure an IBM-compatible laptop computer for use as a Portable Operator’s Terminal. Operator shall be able to connect configured Terminal to the system network or directly to each controller for programming, setting up, and troubleshooting.

2.4 CONTROLLER SOFTWARE

A. Furnish the following applications for building and energy management. All software application shall reside and operate in the system controllers. Applications shall be editable through operator workstation, web browser interface, or engineering workstation.

B. System Security. See Paragraph 2.3.E.5 (Security) and Paragraph 2.3.E.14.c.iii (Operator Activity).

C. Scheduling. Provide the capability to execute control functions according to a user created or edited schedule. Each schedule shall provide the following schedule options as a minimum:

1. Weekly Schedule. Provide separate schedules for each day of the week. Each schedule shall be able to include up to 5 occupied periods (5 start-stop pairs or 10 events).

2. Exception Schedules. Provide the ability for the operator to designate any day of the year as an exception schedule. Exception schedules may be defined up to a year in advance. Once an exception schedule has executed, the system shall discard and replace the exception schedule with the standard schedule for that day of the week.

3. Holiday Schedules. Provide the capability for the operator to define up to 24 special or holiday schedules. These schedules will be repeated each year. The operator shall be able to define the length of each holiday period.

D. System Coordination. Operator shall be able to group related equipment based on function and location and to use these groups for scheduling and other applications.

E. Binary Alarms. Each binary object shall have the capability to be configured to alarm based on the operator-specified state. Provide the capability to automatically and manually disable alarming.

F. Analog Alarms. Each analog object shall have both high and low alarm limits. The operator shall be able to enable or disable these alarms.

G. Alarm Reporting. The operator shall be able to determine the action to be taken in the event of an alarm. An alarm shall be able to start programs, print, be logged in the event log, generate custom messages, and display on graphics.

H. Remote Communication. System shall automatically contact operator workstation or server on receipt of critical alarms. If no network connection is available, system shall use a modem connection.

I. Demand Limiting.

1. The demand-limiting program shall monitor building power consumption from a building power meter (provided by others) which generates pulse signals or a BACnet communications interface. An acceptable alternative is for the system to monitor a watt transducer or current transformer attached to the building feeder lines.
2. When power consumption exceeds adjustable levels, system shall automatically adjust setpoints, de-energize low-priority equipment, and take other programmatic actions to reduce demand as specified in Section 23 09 93 (Sequences of Operation). When demand drops below adjustable levels, system shall restore loads as specified.

J. Maintenance Management. The system shall be capable of generating maintenance alarms when equipment exceeds adjustable runtime, equipment starts, or performance limits. Configure and enable maintenance alarms as specified in 23 09 93 (Sequences of Operation).

K. Sequencing. Application software shall sequence chillers, boilers, and pumps as specified in Section 23 09 93 (Sequences of Operation).

L. PID Control. System shall provide direct- and reverse-acting PID (proportional-integral-derivative) algorithms. Each algorithm shall have anti-windup and selectable controlled variable, setpoint, and PID gains. Each algorithm shall calculate a time-varying analog value that can be used to position an output or to stage a series of outputs. The calculation interval, PID gains, and other tuning parameters shall be adjustable by a user with the correct security level.

M. Staggered Start. System shall stagger controlled equipment restart after power outage. Operator shall be able to adjust equipment restart order and time delay between equipment restarts.

N. Energy Calculations.
1. The system shall accumulate and convert instantaneous power (kW) or flow rates (L/s [gpm]) to energy usage data.
2. The system shall calculate a sliding-window average (rolling average). Operator shall be able to adjust window interval to 15 minutes, 30 minutes, or 60 minutes.

O. Anti-Short Cycling. All binary output objects shall be protected from short cycling by means of adjustable minimum on-time and off-time settings.

P. On and Off Control with Differential. Provide an algorithm that allows a binary output to be cycled based on a controlled variable and a setpoint. The algorithm shall be direct-acting or reverse-acting.

Q. Runtime Totalization. Provide software to totalize runtime for each binary input and output. Operator shall be able to enable runtime alarm based on exceeded adjustable runtime limit. Configure and enable runtime totalization and alarms as specified in Section 23 09 93 (Sequence of Operations).

2.5 CONTROLLERS

A. General. Provide an adequate number of Building Controllers (BC), Advanced Application Controllers (AAC), Application Specific Controllers (ASC), Smart Actuators (SA), and Smart Sensors (SS) as required to achieve performance specified in Section 23 09 23 Article 1.9 (System Performance). Every device in the system which executes control logic and directly controls HVAC equipment must conform to a standard BACnet Device profile as specified in ANSI/ASHRAE 135, BACnet Annex L. Unless otherwise specified, hardwired actuators and sensors may be used in lieu of BACnet Smart Actuators and Smart Sensors.

B. BACnet.
1. Building Controllers (BCs). Each BC shall conform to BACnet Building Controller (B-BC) device profile as specified in ANSI/ASHRAE 135, BACnet Annex L, and shall be listed as a certified B-BC in the BACnet Testing Laboratories (BTL) Product Listing.
2. Advanced Application Controllers (AACs). Each AAC shall conform to BACnet Advanced Application Controller (B-AAC) device profile as specified in ANSI/ASHRAE 135, BACnet Annex L and shall be listed as a certified B-AAC in the BACnet Testing Laboratories (BTL) Product Listing.

3. Application Specific Controllers (ASCs). Each ASC shall conform to BACnet Application Specific Controller (B-ASC) device profile as specified in ANSI/ASHRAE 135, BACnet Annex L and shall be listed as a certified B-ASC in the BACnet Testing Laboratories (BTL) Product Listing.
4. Smart Sensors (SSs). Each SS shall conform to BACnet Smart Sensor (B-SS) device profile as specified in ANSI/ASHRAE 135, BACnet Annex L and shall be listed as a certified B-SS in the BACnet Testing Laboratories (BTL) Product Listing.
5. BACnet Communication.
    a. Each BC shall reside on or be connected to a BACnet network using ISO 8802-3 (Ethernet) Data Link/Physical layer protocol and BACnet/IP addressing.
    b. BACnet routing shall be performed by BCs or other BACnet device routers as necessary to connect BCs to networks of AACs and ASCs.
    c. Each AAC shall reside on a BACnet network using ISO 8802-3 (Ethernet) Data Link/Physical layer protocol with BACnet/IP addressing, or it shall reside on a BACnet network using the ARCNET or MS/TP Data Link/Physical layer protocol.
    d. Each ASC shall reside on a BACnet network using the ARCNET or MS/TP Data Link/Physical layer protocol.
    e. Each SA shall reside on a BACnet network using the ARCNET or MS/TP Data Link/Physical layer protocol.
    f. Each SS shall reside on a BACnet network using ISO 8802-3 (Ethernet) Data Link/Physical layer protocol with BACnet/IP addressing, or it shall reside on a BACnet network using ARCNET or MS/TP Data Link/Physical layer protocol.

C. Communication
1. Service Port. Each controller shall provide a service communication port for connection to a Portable Operator's Terminal. Connection shall be extended to space temperature sensor ports where shown on drawings.
2. Signal Management. BC and ASC operating systems shall manage input and output communication signals to allow distributed controllers to share real and virtual object information and to allow for central monitoring and alarms.
3. Data Sharing. Each BC and AAC shall share data as required with each networked BC and AAC.
4. Stand-Alone Operation. Each piece of equipment specified in Section 23 09 93 shall be controlled by a single controller to provide stand-alone control in the event of communication failure. All I/O points specified for a piece of equipment shall be integral to its controller. Provide stable and reliable stand-alone control using default values or other method for values normally read over the network such as outdoor air conditions, supply air or water temperature coming from source equipment, etc.

D. Environment. Controller hardware shall be suitable for anticipated ambient conditions.
1. Controllers used outdoors or in wet ambient conditions shall be mounted in waterproof enclosures and shall be rated for operation at -29°C to 60°C (-20°F to 140°F).
2. Controllers used in conditioned space shall be mounted in dust-protective enclosures and shall be rated for operation at 0°C to 50°C (32°F to 120°F).

E. Keypad. Provide a local keypad and display for each BC and AAC. Operator shall be able to use keypad to view and edit data. Keypad and display shall require password to prevent unauthorized use. If the manufacturer does not normally provide a keypad and display for each BC and AAC, provide the software and any interface cabling needed to use a laptop computer as a Portable Operator's Terminal for the system.

F. Real-Time Clock. Controllers that perform scheduling shall have a real-time clock.

G. Serviceability. Provide diagnostic LEDs for power, communication, and processor. All wiring connections shall be made to a field-removable modular terminal strip or to a termination card

connected by a ribbon cable. Each BC and AAC shall continually check its processor and memory circuit status and shall generate an alarm on abnormal operation. System shall continuously check controller network and generate alarm for each controller that fails to respond.

H. Memory.
   1. Controller memory shall support operating system, database, and programming requirements.
   2. Each BC and AAC shall retain BIOS and application programming for at least 72 hours in the event of power loss.
   3. Each ASC and SA shall use nonvolatile memory and shall retain BIOS and application programming in the event of power loss. System shall automatically download dynamic control parameters following power loss.

I. Immunity to Power and Noise. Controllers shall be able to operate at 90% to 110% of nominal voltage rating and shall perform an orderly shutdown below 80% nominal voltage. Operation shall be protected against electrical noise of 5 to 120 Hz and from keyed radios up to 5 W at 1 m (3 ft).

J. Transformer. ASC power supply shall be fused or current limiting and shall be rated at a minimum of 125% of ASC power consumption.

2.6 INPUT AND OUTPUT INTERFACE

A. General. Hard-wire input and output points to BCs, AACs, ASCs, or SAs.

B. Protection. All input points and output points shall be protected such that shorting of the point to itself, to another point, or to ground shall cause no damage to the controller. All input and output points shall be protected from voltage up to 24 V of any duration, such that contact with this voltage will cause no controller damage.

C. Binary Inputs. Binary inputs shall allow the monitoring of ON/OFF signals from remote devices. The binary inputs shall provide a wetting current of at least 12 mA to be compatible with commonly available control devices and shall be protected against contact bounce and noise. Binary inputs shall sense dry contact closure without application of power external to the controller.

D. Pulse Accumulation Inputs. Pulse accumulation inputs shall conform to binary input requirements and shall also accumulate up to 10 pulses per second.

E. Analog Inputs. Analog inputs shall monitor low-voltage (0–10 Vdc), current (4–20 mA), or resistance (thermistor or RTD) signals. Analog inputs shall be compatible with and field configurable to commonly available sensing devices.

F. Binary Outputs. Binary outputs shall provide for ON/OFF operation or a pulsed low-voltage signal for pulse width modulation control. Binary outputs on Building Controllers shall have three-position (on-off-auto) override switches and status lights. Outputs shall be selectable for normally open or normally closed operation.

G. Analog Outputs. Analog outputs shall provide a modulating signal for the control of end devices. Outputs shall provide either a 0–10 Vdc or a 4–20 mA signal as required to properly control output devices. Each Building Controller analog output shall have a two-position (auto-manual) switch, a manually adjustable potentiometer, and status lights. Analog outputs shall not drift more than 0.4% of range annually.

H. Tri-State Outputs. Control three-point floating electronic actuators without feedback with tri-state outputs (two coordinated binary outputs). Tri-State outputs may be used to provide analog output control in zone control and terminal unit control applications such as VAV terminal units, duct-mounted heating coils, and zone dampers.

I. System Object Capacity. The system size shall be expandable to at least twice the number of input/output objects required for this project. Additional controllers (along with associated devices and wiring) shall be all that is necessary to achieve this capacity requirement. The operator interfaces installed for this project shall not require any hardware additions or software revisions in order to expand the system

2.7 AUXILIARY CONTROL DEVICES

A. Motorized Control Dampers, unless otherwise specified elsewhere, shall be as follow.
   1. Type. Control dampers shall be the parallel or opposed-blade type as specified below or as scheduled on drawings.
      a. Outdoor and return air mixing dampers and face-and-bypass dampers shall be parallel-blade and shall direct airstreams toward each other.
      b. Other modulating dampers shall be opposed-blade.
      c. Two-position shutoff dampers shall be parallel- or opposed-blade with blade and side seals.
   2. Frame. Damper frames shall be 2.38 mm (13 gauge) galvanized steel channel or 3.175 mm (⅛ in.) extruded aluminum with reinforced corner bracing.
   3. Blades. Damper blades shall not exceed 20 cm (8 in.) in width or 125 cm (48 in.) in length. Blades shall be suitable for medium velocity (10 m/s [2000 fpm]) performance. Blades shall be not less than 1.5875 mm (16 gauge).
   4. Shaft Bearings. Damper shaft bearings shall be as recommended by manufacturer for application, oil impregnated sintered bronze, or better.
   5. Seals. Blade edges and frame top and bottom shall have replaceable seals of butyl rubber or neoprene. Side seals shall be spring-loaded stainless steel. Blade seals shall leak no more than 50 L/s·m^2(10 cfm per ft^2) at 1000 Pa (4 in. w.g.) differential pressure. Blades shall be airfoil type suitable for wide-open face velocity of 7.5 m/s (1500 fpm).
   6. Sections. Individual damper sections shall not exceed 125 cm × 150 cm (48 in. × 60 in.). Each section shall have at least one damper actuator.
   7. Modulating dampers shall provide a linear flow characteristic where possible.
   8. Linkages. Dampers shall have exposed linkages.
B. Electric Damper and Valve Actuators.
   1. Stall Protection. Mechanical or electronic stall protection shall prevent actuator damage throughout the actuator's rotation.
   2. Spring-return Mechanism. Actuators used for power-failure and safety applications shall have an internal mechanical spring-return mechanism or an uninterruptible power supply (UPS).
   3. Signal and Range. Proportional actuators shall accept a 0–10 Vdc or a 0–20 mA control signal and shall have a 2–10 Vdc or 4–20 mA operating range. (Floating motor actuators may be substituted for proportional actuators in terminal unit applications as described in paragraph 2.6H.)
   4. Wiring. 24 Vac and 24 Vdc actuators shall operate on Class 2 wiring.
   5. Manual Positioning. Operators shall be able to manually position each actuator when the actuator is not powered. Non-spring-return actuators shall have an external manual gear release. Spring-return actuators with more than 7 N·m (60 in.-lb) torque capacity shall have a manual crank.
C. Control Valves.
   1. Control valves shall be two-way or three-way type for two-position or modulating service as shown.
   2. Close-off (differential) Pressure Rating: Valve actuator and trim shall be furnished to provide the following minimum close-off pressure ratings:
      a. Water Valves:
         i. Two-way: 150% of total system (pump) head.
         ii. Three-way: 300% of pressure differential between ports A and B at design flow or 100% of total system (pump) head.
      b. Steam Valves: 150% of operating (inlet) pressure.

3. Water Valves.
    a. Body and trim style and materials shall be in accordance with manufacturer's recommendations for design conditions and service shown, with equal percentage ports for modulating service.
    b. Sizing Criteria:
        i. Two-position service: Line size.
        ii. Two-way modulating service: Pressure drop shall be equal to twice the pressure drop through heat exchanger (load), 50% of the pressure difference between supply and return mains, or 5 psi, whichever is greater.
        iii. Three-way modulating service: Pressure drop equal to twice the pressure drop through the coil exchanger (load), 35 kPa (5 psi) maximum.
        iv. Valves ½ in. through 2 in. shall be bronze body or cast brass ANSI Class 250, spring-loaded, PTFE packing, quick opening for two-position service. Two-way valves to have replaceable composition disc or stainless steel ball.
        v. Valves 2½ in. and larger shall be cast iron ANSI Class 125 with guided plug and PTFE packing.
    c. Water valves shall fail normally open or closed, as scheduled on plans, or as follows:
        i. Water zone valves—normally open preferred.
        ii. Heating coils in air handlers—normally open.
        iii. Chilled water control valves—normally closed.
        iv. Other applications—as scheduled or as required by sequences of operation.
4. Steam Valves.
    a. Body and trim materials shall be in accordance with manufacturer's recommendations for design conditions and service with linear ports for modulating service.
    b. Sizing Criteria:
        i. Two-position service: pressure drop 10% to 20% of inlet psig.
        ii. Modulating service: 100 kPa (15 psig) or less; pressure drop 80% of inlet psig.
        iii. Modulating service: 101 to 350 kPa (16 to 50 psig); pressure drop 50% of inlet psig.
        iv. Modulating service: over 350 kPa (50 psig); pressure drop as scheduled on plans.

D. Binary Temperature Devices.
1. Low-Voltage Space Thermostats. Low-voltage space thermostats shall be 24 V, bimetal-operated, mercury-switch type, with adjustable or fixed anticipation heater, concealed setpoint adjustment, 13°C–30°C (55°F–85°F) setpoint range, 1°C (2°F) maximum differential, and vented ABS plastic cover.
2. Line-Voltage Space Thermostats. Line-voltage space thermostats shall be bimetal-actuated, open-contact type or bellows-actuated, enclosed, snap-switch type or equivalent solid-state type, with heat anticipator, UL listing for electrical rating, concealed setpoint adjustment, 13°C–30°C (55°F–85°F) setpoint range, 1°C (2°F) maximum differential, and vented ABS plastic cover.
3. Low-Limit Thermostats. Low-limit airstream thermostats shall be UL listed, vapor pressure type. Element shall be at least 6 m (20 ft) long. Element shall sense temperature in each 30 cm (1 ft) section and shall respond to lowest sensed temperature. Low-limit thermostat shall be manual reset only.

E. Temperature Sensors.
1. Type. Temperature sensors shall be Resistance Temperature Device (RTD) or thermistor.

2. Duct Sensors. Duct sensors shall be single point or averaging as shown. Averaging sensors shall be a minimum of 1.5 m (5 ft) in length per 1 m^2(10 ft^2) of duct cross-section.
3. Immersion Sensors. Provide immersion sensors with a separable stainless steel well. Well pressure rating shall be consistent with system pressure it will be immersed in. Well shall withstand pipe design flow velocities.
4. Space Sensors. Space sensors shall have setpoint adjustment, override switch, display, and communication port as shown.
5. Differential Sensors. Provide matched sensors for differential temperature measurement.

F. Humidity Sensors.
1. Duct and room sensors shall have a sensing range of 20%–80%.
2. Duct sensors shall have a sampling chamber.
3. Outdoor air humidity sensors shall have a sensing range of 20%–95% RH and shall be suitable for ambient conditions of -40°C–75°C (-40°F–170°F).
4. Humidity sensors shall not drift more than 1% of full scale annually.

G. Flow Switches. Flow-proving switches shall be paddle (water service only) or differential pressure type (air or water service) as shown. Switches shall be UL listed, SPDT snap-acting, and pilot duty rated (125 VA minimum).
1. Paddle switches shall have adjustable sensitivity and NEMA 1 enclosure unless otherwise specified.
2. Differential pressure switches shall have scale range and differential suitable for intended application and NEMA 1 enclosure unless otherwise specified.

H. Relays.
1. Control Relays. Control relays shall be plug-in type, UL listed, and shall have dust cover and LED “energized” indicator. Contact rating, configuration, and coil voltage shall be suitable for application.
2. Time Delay Relays. Time delay relays shall be solid-state plug-in type, UL listed, and shall have adjustable time delay. Delay shall be adjustable ±100% from setpoint shown. Contact rating, configuration, and coil voltage shall be suitable for application. Provide NEMA 1 enclosure for relays not installed in local control panel.

I. Override Timers.
1. Unless implemented in control software, override timers shall be spring-wound line voltage, UL Listed, with contact rating and configuration required by application. Provide 0–6 hour calibrated dial unless otherwise specified. Flush mount timer on local control panel face or where shown.

J. Current Transmitters.
1. AC current transmitters shall be self-powered, combination split-core current transformer type with built-in rectifier and high-gain servo amplifier with 4–20 mA two-wire output. Full-scale unit ranges shall be 10 A, 20 A, 50 A, 100 A, 150 A, and 200 A, with internal zero and span adjustment. Unit accuracy shall be ±1% full-scale at 500 ohm maximum burden.
2. Transmitter shall meet or exceed ANSI/ISA S50.1 requirements and shall be UL/CSA recognized.
3. Unit shall be split-core type for clamp-on installation on existing wiring.

K. Current Transformers.
1. AC current transformers shall be UL/CSA recognized and shall be completely encased (except for terminals) in approved plastic material.
2. Transformers shall be available in various current ratios and shall be selected for ±1% accuracy at 5 A full-scale output.
3. Use fixed-core transformers for new wiring installation and split-core transformers for existing wiring installation.

L. Voltage Transmitters.

1. AC voltage transmitters shall be self-powered single-loop (two-wire) type, 4–20 mA output with zero and span adjustment.
2. Adjustable full-scale unit ranges shall be 100–130 Vac, 200–250 Vac, 250–330 Vac, and 400–600 Vac. Unit accuracy shall be ±1% full-scale at 500 ohm maximum burden.
3. Transmitters shall meet or exceed ANSI/ISA S50.1 requirements and shall be UL/CSA recognized at 600 Vac rating.

M. Voltage Transformers.
1. AC voltage transformers shall be UL/CSA recognized, 600 Vac rated, and shall have built-in fuse protection.
2. Transformers shall be suitable for ambient temperatures of 4°C–55°C (40°F–130°F) and shall provide ±0.5% accuracy at 24 Vac and 5 VA load.
3. Windings (except for terminals) shall be completely enclosed with metal or plastic.

N. Power Monitors.
1. Selectable rate pulse output for kWh reading, 4–20 mA output for kW reading, N.O. alarm contact, and ability to operate with 5.0 amp current inputs or 0–0.33 volt inputs.
2. 1.0% full-scale true RMS power accuracy, +0.5 Hz, voltage input range 120–600 V, and auto range select.
3. Under voltage/phase monitor circuitry.
4. NEMA 1 enclosure.
5. Current transformers having a 0.5% FS accuracy, 600 VAC isolation voltage with 0–0.33 V output. If 0–5 A current transformers are provided, a three-phase disconnect/shorting switch assembly is required.

O. Hydronic Flowmeters
1. Insertion-Type Turbine Meter
   a. Dual counter-rotating axial turbine elements, each with its own rotational sensing system, and an averaging circuit to reduce measurement errors due to swirl and flow profile distortion. Single turbine for piping 2 inches and smaller. Flow sensing turbine rotors shall be non-metallic and not impaired by magnetic drag.
   b. Insertion type complete with ‘hot-tap’ isolation valves to enable sensor removal without water supply system shutdown.
   c. Sensing method shall be impedance sensing (non magnetic and non photoelectric)
   d. Volumetric accuracy
      i. ± 0.5% of reading at calibrated velocity
      ii. ± 1% of reading from 3 to 30 ft/s (10:1 range)
      iii. ± 2% of reading from 0.4 to 20 ft/s (50:1 range)
   e. Each sensor shall be individually calibrated and tagged accordingly against the manufacturer’s primary standards which must be accurate to within 0.1% of flow rate and traceable to the National Institute of Standards and Technology (NIST).
   f. Maximum operating pressure of 400 psi and maximum operating temperature of 200°F continuous (220°F peak).
   g. All wetted metal parts shall be constructed of 316 stainless steel.
   h. Analog outputs shall consist of non interactive zero and span adjustments, a DC linearly of 0.1% of span, voltage output of 0-10 Vdc, and current output of 4-20 mA.
2. Magnetic Flow-Tube Type Flowmeter
   a. Sensor shall be a magnetic flowmeter, which utilizes Faraday’s Law to measure volumetric fluid flow through a pipe. The flowmeter shall consist of two elements, the sensor and the electronics. The sensor shall generate a measuring signal proportional to the flow velocity in the pipe. The electronics shall convert this EMF into a standard current output.

b. Electronic replacement shall not affect meter accuracy (electronic units are not matched with specific sensors).
c. Four-wire, externally powered, magnetic type flow transmitter with adjustable span and zero, integrally mounted to flow tube. Output signal shall be a digital pulse proportional to the flow rate (to provide maximum accuracy and to handle abrupt changes in flow). Standard 4-20 mA or 0-10 Vdc outputs may be used provided accuracy is as specified.
d. Flow Tube:
    i. ANSI class 150 psig steel
    ii. ANSI flanges
    iii. Protected with PTFE, PFA, or ETFE liner rated for 245°F minimum fluid temperature
e. Electrode and grounding material
    i. 316L Stainless steel or Hastelloy C
    ii. Electrodes shall be fused to ceramic liner and not require o-rings.
f. Electrical Enclosure: NEMA 4, 7
g. Approvals:
    i. UL or CSA
    ii. NSF Drinking Water approval for domestic water applications
h. Performance
    i. Accuracy shall be ±0.5% of actual reading from 3 to 30 ft/s flow velocities, and 0.015 ft/s from 0.04 to 3 ft/s.
    ii. Stability: 0.1% of rate over six months.
    iii. Meter repeatability shall be ±0.1% of rate at velocities > 3 ft/s.

3. Magnetic Insertion-Type Flowmeter
    a. Magnetic Faraday point velocity measuring device.
    b. Insertion type complete with hot-tap isolation valves to enable sensor removal without water supply system shutdown.
    c. 4-20 mA transmitter proportional to flow or velocity.
    d. Accuracy: larger of 1% of reading and 0.2 ft/s.
    e. Flow range: 0.2 to 20 ft/s, bidirectional.
    f. Each sensor shall be individually calibrated and tagged accordingly against the manufacturer's primary standards which must be accurate to within 0.1% of flow rate and traceable to the National Institute of Standards and Technology (NIST).
4. Vortex Shedding Flowmeter
    a. Output: 4-20 mA, 0-10 Vdc, 0-5 Vdc.
    b. Maximum Fluid Temperature: 800ºF (427 °C).
    c. Wetted Parts: Stainless Steel.
    d. Housing: NEMA 4X.
    e. Turndown: 25:1 minimum.
    f. Accuracy: 0.5% of calibrated span for liquids, 1% of calibrated span for steam and gases.
    g. Body: Wafer style or ANSI flanged to match piping specification.
5. Transit-Time Ultrasonic Flowmeter
    a. Clamp-On transit-time ultrasonic flowmeter
    b. Wide-Beam transducer technology
    c. 4-20 mA transmitter proportional to flow or velocity.
    d. Accuracy: 0.5% of reading in range 1 to 30 ft/s, 0.001 ft/s sensitivity.

P. Thermal Energy Meters

1. Matched RTD, solid state, or thermistor temperature sensors with a differential temperature accuracy of ±0.15°F.
2. Flow meter : See "Hydronic Flowmeters" section.
3. Unit accuracy of ±1% factory calibrated, traceable to NIST with certification.
4. NEMA 1 enclosure.
5. Panel mounted display.
6. UL listed.
7. Isolated 4–20 ma signals for energy rate and supply and return temperatures and flow.

Q. Current Switches.
1. Current-operated switches shall be self-powered, solid-state with adjustable trip current. Select switches to match application current and DDC system output requirements.

R. Pressure Transducers.
1. Transducers shall have linear output signal and field-adjustable zero and span.
2. Transducer sensing elements shall withstand continuous operating conditions of positive or negative pressure 50% greater than calibrated span without damage.
3. Water pressure transducer diaphragm shall be stainless steel with minimum proof pressure of 1000 kPa (150 psi). Transducer shall have 4–20 mA output, suitable mounting provisions, and block and bleed valves.
4. Water differential pressure transducer diaphragm shall be stainless steel with minimum proof pressure of 1000 kPa (150 psi). Over-range limit (differential pressure) and maximum static pressure shall be 2000 kPa (300 psi.)Transducer shall have 4–20 mA output, suitable mounting provisions, and 5-valve manifold.

S. Differential Pressure Switches. Differential pressure switches (air or water service) shall be UL listed, SPDT snap-acting, pilot duty rated (125 VA minimum) and shall have scale range and differential suitable for intended application and NEMA 1 enclosure unless otherwise specified.

T. Pressure-Electric (PE) Switches.
1. Shall be metal or neoprene diaphragm actuated, operating pressure rated for 0–175 kPa (0–25 psig), with calibrated scale minimum setpoint range of 14–125 kPa (2–18 psig) minimum, UL listed.
2. Provide one- or two-stage switch action (SPDT, DPST, or DPDT) as required by application Electrically rated for pilot duty service (125 VA minimum) and/or for motor control.
3. Switches shall be open type (panel-mounted) or enclosed type for remote installation. Enclosed type shall be NEMA 1 unless otherwise specified.
4. Each pneumatic signal line to PE switches shall have permanent indicating gauge.

U. Occupancy Sensors. Occupancy sensors shall utilize Passive Infrared (PIR) and/or Microphonic Passive technology to detect the presence of people within a room. Sensors shall be mounted as indicated on the approved drawings. The sensor output shall be accessible by any lighting and/or HVAC controller in the system. Occupancy sensors shall be capable of being powered from the lighting or HVAC control panel, as shown on the drawings. Occupancy sensor delay shall be software adjustable through the user interface and shall not require manual adjustment at the sensor.

V. Local Control Panels.
1. All indoor control cabinets shall be fully enclosed NEMA 1 construction with (hinged door) key-lock latch and removable subpanels. A single key shall be common to all field panels and subpanels.
2. Interconnections between internal and face-mounted devices shall be prewired with color-coded stranded conductors neatly installed in plastic troughs and/or tie-wrapped. Terminals for field connections shall be UL listed for 600 volt service, individually identified per control/ interlock drawings, with adequate clearance for field wiring. Control terminations for field connection shall be individually identified per control drawings.

3. Provide ON/OFF power switch with overcurrent protection for control power sources to each local panel.

2.8 WIRING AND RACEWAYS

A. General. Provide copper wiring, plenum cable, and raceways as specified in applicable sections of Division 26.
B. Insulated wire shall use copper conductors and shall be UL listed for 90°C (200°F) minimum service.

PART 3: EXECUTION

3.1 EXAMINATION

A. The contractor shall inspect the site to verify that equipment may be installed as shown. Any discrepancies, conflicts, or omissions shall be reported to the engineer for resolution before rough-in work is started.
B. The contractor shall examine the drawings and specifications for other parts of the work. If head room or space conditions appear inadequate—or if any discrepancies occur between the plans and the contractor's work and the plans and the work of others—the contractor shall report these discrepancies to the engineer and shall obtain written instructions for any changes necessary to accommodate the contractor's work with the work of others. Any changes in the work covered by this specification made necessary by the failure or neglect of the contractor to report such discrepancies shall be made by—and at the expense of—this contractor.

3.2 PROTECTION

A. The contractor shall protect all work and material from damage by his/her work or employees and shall be liable for all damage thus caused.
B. The contractor shall be responsible for his/her work and equipment until finally inspected, tested, and accepted. The contractor shall protect any material that is not immediately installed. The contractor shall close all open ends of work with temporary covers or plugs during storage and construction to prevent entry of foreign objects.

3.3 COORDINATION

A. Site
   1. Where the mechanical work will be installed in close proximity to, or will interfere with, work of other trades, the contractor shall assist in working out space conditions to make a satisfactory adjustment. If the contractor installs his/her work before coordinating with other trades, so as to cause any interference with work of other trades, the contractor shall make the necessary changes in his/her work to correct the condition without extra charge.
   2. Coordinate and schedule work with other work in the same area and with work dependent upon other work to facilitate mutual progress.
B. Submittals. See Section 23 09 23 Article 1.10 (Submittals).
C. Test and Balance.
   1. The contractor shall furnish a single set of all tools necessary to interface to the control system for test and balance purposes.
   2. The contractor shall provide training in the use of these tools. This training will be planned for a minimum of 4 hours.
   3. In addition, the contractor shall provide a qualified technician to assist in the test and balance process, until the first 20 terminal units are balanced.

4. The tools used during the test and balance process will be returned at the completion of the testing and balancing.

D. Life Safety.
1. Duct smoke detectors required for air handler shutdown are provided under Division 28. Interlock smoke detectors to air handlers for shutdown as specified in Section 23 09 93 (Sequences of Operation).
2. Smoke dampers and actuators required for duct smoke isolation are provided under Division 23. Interlock smoke dampers to air handlers as specified in Section 23 09 93 (Sequences of Operation).
3. Fire and smoke dampers and actuators required for fire-rated walls are provided under Division 23. Fire and smoke damper control is provided under Division 28.

E. Coordination with controls specified in other sections or divisions. Other sections and/or divisions of this specification include controls and control devices that are to be part of or interfaced to the control system specified in this section. These controls shall be integrated into the system and coordinated by the contractor as follows:
1. All communication media and equipment shall be provided as specified in Section 23 09 23 Article 2.2 (Communication).
2. Each supplier of a controls product is responsible for the configuration, programming, start up, and testing of that product to meet the sequences of operation described in Section 23 09 93.
3. The contractor shall coordinate and resolve any incompatibility issues that arise between control products provided under this section and those provided under other sections or divisions of this specification.
4. The contractor is responsible for providing all controls described in the contract documents regardless of where within the contract documents these controls are described.
5. The contractor is responsible for the interface of control products provided by multiple suppliers regardless of where this interface is described within the contract documents.

3.4 GENERAL WORKMANSHIP

A. Install equipment, piping, and wiring/raceway parallel to building lines (i.e. horizontal, vertical, and parallel to walls) wherever possible.
B. Provide sufficient slack and flexible connections to allow for vibration of piping and equipment.
C. Install equipment in readily accessible locations as defined by Chapter 1 Article 100 Part A of the National Electrical Code (NEC).
D. Verify integrity of all wiring to ensure continuity and freedom from shorts and grounds.
E. All equipment, installation, and wiring shall comply with industry specifications and standards for performance, reliability, and compatibility and be executed in strict adherence to local codes and standard practices.

3.5 FIELD QUALITY CONTROL

A. All work, materials, and equipment shall comply with rules and regulations of applicable local, state, and federal codes and ordinances as identified in Section 23 09 23 Article 1.8 (Codes and Standards).
B. Contractor shall continually monitor the field installation for code compliance and quality of workmanship.
C. Contractor shall have work inspection by local and/or state authorities having jurisdiction over the work.

3.6 EXISTING EQUIPMENT

A. Wiring. Interconnecting control wiring shall be removed and shall become the property of the contractor unless specifically noted or shown to be reused.

B. Local Control Panels. Remove and deliver existing control panels to Owner.
C. Repair. Unless otherwise directed, the contractor is not responsible for repair or replacement of existing energy equipment and systems, valves, dampers, or actuators. Should the contractor find existing equipment that requires maintenance, the engineer is to be notified immediately.
D. Indicator Gauges. Where these devices remain and are not removed, they must be made operational and recalibrated to ensure reasonable accuracy.
E. Room Thermostats. Remove and deliver existing room thermostats to Owner unless otherwise noted. Patch and finish holes and marks left by removal to match existing walls.
F. Electronic Sensors and Transmitters. Remove and deliver existing sensors and transmitters to Owner.
G. Controllers and Auxiliary Electronic Devices. Remove and deliver existing controllers and auxiliary electronic devices to Owner.
H. Damper Actuators, Linkages, and Appurtenances. Remove and deliver existing damper actuators, linkages and appurtenances to Owner.
I. Control Valves. Replace existing control valves with new. Deliver removed control valves to Owner.
J. Control Compressed Air Systems. Replace existing control compressed air systems with new unless otherwise noted. Deliver removed systems to Owner.
K. Existing System Operating Schedule. Existing mechanical system may be disabled during this work.
L. The scheduling of fans through existing or temporary time clocks or control system shall be maintained throughout the DDC system installation
M. Install control panels where shown.
N. Modify existing starter control circuits, if necessary, to provide hand-off-auto control of each controlled starter. If new starters or starter control packages are required, these shall be included as part of this contract.
O. Patch holes and finish to match existing walls.

3.7 WIRING

A. All control and interlock wiring shall comply with national and local electrical codes, and Division 26 of this specification, Where the requirements of this section differ from Division 26, the requirements of this section shall take precedence.
B. All NEC Class 1 (line voltage) wiring shall be UL listed in approved raceway according to NEC and Division 26 requirements.
C. All low-voltage wiring shall meet NEC Class 2 requirements. Low-voltage power circuits shall be subfused when required to meet Class 2 current limit.
D. Where NEC Class 2 (current-limited) wires are in concealed and accessible locations, including ceiling return air plenums, approved cables not in raceway may be used provided that cables are UL listed for the intended application.
E. All wiring in mechanical, electrical, or service rooms – or where subject to mechanical damage – shall be installed in raceway at levels below 3 m (10ft).
F. Do not install Class 2 wiring in raceways containing Class 1 wiring. Boxes and panels containing high-voltage wiring and equipment may not be used for low-voltage wiring except for the purpose of interfacing the two (e.g. relays and transformers).
G. Do not install wiring in raceway containing tubing.
H. Where Class 2 wiring is run exposed, wiring is to be run parallel along a surface or perpendicular to it and neatly tied at 3 m (10 ft) intervals.
I. Where plenum cables are used without raceway, they shall be supported from or anchored to structural members. Cables shall not be supported by or anchored to ductwork, electrical raceways, piping, or ceiling suspension systems.
J. All wire-to-device connections shall be made at a terminal block or terminal strip. All wire-to-wire connections shall be at a terminal block.

K. All wiring within enclosures shall be neatly bundled and anchored to permit access and prevent restriction to devices and terminals.
L. Maximum allowable voltage for control wiring shall be 120 V. If only higher voltages are available, the contractor shall provide step-down transformers.
M. All wiring shall be installed as continuous lengths, with no splices permitted between termination points.
N. Install plenum wiring in sleeves where it passes through walls and floors. Maintain fire rating at all penetrations.
O. Size of raceway and size and type of wire type shall be the responsibility of the contractor in keeping with the manufacturer's recommendations and NEC requirements, except as noted elsewhere.
P. Include one pull string in each raceway 2.5 cm (1 in.) or larger.
Q. Use color-coded conductors throughout with conductors of different colors.
R. Control and status relays are to be located in designated enclosures only. These enclosures include packaged equipment control panel enclosures unless they also contain Class 1 starters.
S. Conceal all raceways except within mechanical, electrical, or service rooms. Install raceway to maintain a minimum clearance of 15 cm (6 in.) from high-temperature equipment (e.g. steam pipes or flues).
T. Secure raceways with raceway clamps fastened to the structure and spaced according to code requirements. Raceways and pull boxes may not be hung on flexible duct strap or tie rods. Raceways may not be run on or attached to ductwork.
U. Adhere to this specification's Division 26 requirements where raceway crosses building expansion joints.
V. Install insulated bushings on all raceway ends and openings to enclosures. Seal top end of vertical raceways.
W. The contractor shall terminate all control and/or interlock wiring and shall maintain updated (as-built) wiring diagrams with terminations identified at the job site.
X. Flexible metal raceways and liquid-tight flexible metal raceways shall not exceed 1 m (3 ft) in length and shall be supported at each end. Flexible metal raceway less than ½ in. electrical trade size shall not be used. In areas exposed to moisture, including chiller and boiler rooms, liquid-tight, flexible metal raceways shall be used.
Y. Raceway must be rigidly installed, adequately supported, properly reamed at both ends, and left clean and free of obstructions. Raceway sections shall be joined with couplings (according to code). Terminations must be made with fittings at boxes, and ends not terminating in boxes shall have bushings installed.

3.8 COMMUNICATION WIRING

A. The contractor shall adhere to the items listed in the "Wiring" article in Part 3 of the specification.
B. All cabling shall be installed in a neat and workmanlike manner. Follow manufacturer's installation recommendations for all communication cabling
C. Do not install communication wiring in raceways and enclosures containing Class 1 or other Class 2 wiring.
D. Maximum pulling, tension, and bend radius for the cable installation, as specified by the cable manufacturer, shall not be exceeded during installation.
E. Contractor shall verify the integrity of the entire network following cable installation. Use appropriate test measures for each particular cable.
F. When a cable enters or exits a building, a lightning arrestor must be installed between the lines and ground. The lighting arrestor shall be installed according to manufacturer's instructions.
G. All runs of communication wiring shall be unspliced length when that length is commercially available.
H. All communication wiring shall be labeled to indicate origination and destination data.

I. All communication wiring shall be labeled to indicate origination and destination data.
J. Grounding of coaxial cable shall be in accordance with NEC regulations article on "Communications Circuits, Cable, and Protector Grounding."
K. BACnet MS/TP communications wiring shall be installed in accordance with ASHRAE/ANSI Standard 135. This includes but is not limited to:
    1. The network shall use shielded, twisted-pair cable with characteristic impedance between 100 and 120 ohms. Distributed capacitance between conductors shall be less than 100 pF per meter (30 pF per foot.)
    2. The maximum length of an MS/TP segment is 1200 meters (4000 ft) with AWG 18 cable. The use of greater distances and/or different wire gauges shall comply with the electrical specifications of EIA-485.
    3. The maximum number of nodes per segment shall be 32, as specified in the EIA 485 standard. Additional nodes may be accommodated by the use of repeaters.
    4. An MS/TP EIA-485 network shall have no T connections.

3.9 INSTALLATION OF SENSORS

A. Install sensors in accordance with the manufacturer's recommendations.
B. Mount sensors rigidly and adequately for environment within which the sensor operates.
C. Room temperature sensors shall be installed on concealed junction boxes properly supported by wall framing.
D. All wires attached to sensors shall be sealed in their raceways or in the wall to stop air transmitted from other areas from affecting sensor readings.
E. Sensors used in mixing plenums and hot and cold decks shall be of the averaging type. Averaging sensors shall be installed in a serpentine manner vertically across the duct. Each bend shall be supported with a capillary clip.
F. Low-limit sensors used in mixing plenums shall be installed in a serpentine manner horizontally across duct. Each bend shall be supported with a capillary clip. Provide 3 m (1 ft) of sensing element for each 1 m^2(1 ft^2) of coil area.
G. Do not install temperature sensors within the vapor plume of a humidifier. If installing a sensor downstream of a humidifier, install it at least 3 m (10 ft) downstream.
H. All pipe-mounted temperature sensors shall be installed in wells. Install liquid temperature sensors with heat-conducting fluid in thermal wells.
I. Install outdoor air temperature sensors on north wall, complete with sun shield at designated location.
J. Differential Air Static Pressure.
    1. Supply Duct Static Pressure. Pipe the high-pressure tap to the duct using a pitot tube. Pipe the low-pressure port to a tee in the height-pressure tap tubing of the corresponding building static pressure sensor (if applicable) or to the location of the duct high-pressure tap and leave open to the plenum.
    2. Return Duct Static Pressure. Pipe high-pressure tap to duct using a pitot tube. Pipe the low-pressure port to a tee in the low-pressure tap tubing of the corresponding building static pressure sensor.
    3. Building Static Pressure. Pipe the low-pressure port of the pressure sensor to the static pressure port located on the outside of the building through a high-volume accumulator. Pipe the high-pressure port to a location behind a thermostat cover.
    4. The piping to the pressure ports on all pressure transducers shall contain a capped test port located adjacent to the transducer.
    5. All pressure transducers, other than those controlling VAV boxes, shall be located in field device panels, not on the equipment monitored or on ductwork. Mount transducers in a location accessible for service without use of ladders or special equipment.

6. All air and water differential pressure sensors shall have gauge tees mounted adjacent to the taps. Water gauges shall also have shut-off valves installed before the tee.

K. Smoke detectors, freezestats, high-pressure cut-offs, and other safety switches shall be hard-wired to de-energize equipment as described in the sequence of operation. Switches shall require manual reset. Provide contacts that allow DDC software to monitor safety switch status.

L. Install humidity sensors for duct mounted humidifiers at least 3 m (10 ft) downstream of the humidifier. Do not install filters between the humidifier and the sensor.

3.10 FLOW SWITCH INSTALLATION

A. Use correct paddle for pipe diameter.

B. Adjust flow switch according to manufacturer's instructions.

3.11 ACTUATORS

A. General. Mount and link control damper actuators according to manufacturer's instructions.
   1. To compress seals when spring-return actuators are used on normally closed dampers, power actuator to approximately 5° open position, manually close the damper, and then tighten the linkage.
   2. Check operation of damper/actuator combination to confirm that actuator modulates damper smoothly throughout stroke to both open and closed positions.
   3. Provide all mounting hardware and linkages for actuator installation.

B. Electric/Electronic
   1. Dampers: Actuators shall be direct mounted on damper shaft or jackshaft unless shown as a linkage installation. For low-leakage dampers with seals, the actuator shall be mounted with a minimum 5° travel available for tightening the damper seal. Actuators shall be mounted following manufacturer’s recommendations.
   2. Valves: Actuators shall be connected to valves with adapters approved by the actuator manufacturer. Actuators and adapters shall be mounted following the actuator manufacturer's recommendations.

C. Pneumatic Actuators.
   1. Size pneumatic damper actuator to operate the related control damper(s) with sufficient reserve power to provide smooth modulating action or two-position action. Actuator also shall be sized for proper speed of response at the velocity and pressure conditions to which the control damper is subject.
   2. Pneumatic damper actuators shall produce sufficient torque to close off against the maximum system pressures encountered. Size the pneumatic damper actuator to close off against the fan shutoff pressure, as a minimum.
   3. Where two or more pneumatic damper actuators are installed for interrelated operation in unison, such as dampers used for mixing, provide the dampers with a positive pilot positioner. The positive pilot positioner shall be directly mounted to the pneumatic damper actuator and have pressure gauges for supply input and output pressures.
   4. The total damper area operated by an actuator shall not exceed 80% of the manufacturer's maximum area rating. Provide at least one actuator for each damper section. Each damper actuator shall not power more than 2 m^2(20 ft^2) of damper.
   5. Use line shafting or shaft couplings (jackshafting) in lieu of blade-to-blade linkages or shaft coupling when driving axially aligned damper sections.

3.12 WARNING LABELS

A. Permanent warning labels shall be affixed to all equipment that can be automatically started by the control system.
   1. Labels shall use white lettering (12-point type or larger) on a red background.

2. Warning labels shall read as follows.

C A U T I O N
This equipment is operating under automatic control and may start or stop at any time without warning. Switch disconnect to"Off"position before servicing.

B. Permanent warning labels shall be affixed to all motor starters and control panels that are connected to multiple power sources utilizing separate disconnects.
   1. Labels shall use white lettering (12-point type or larger) on a red background.
   2. Warning labels shall read as follows.

C A U T I O N
This equipment is fed from more than one power source with separate disconnects. Disconnect all power sources before servicing.

3.13 IDENTIFICATION OF HARDWARE AND WIRING

A. All wiring and cabling, including that within factory-fabricated panels shall be labeled at each end within 5 cm (2 in.) of termination with control system address or termination number.
B. All pneumatic tubing shall be labeled at each end within 5 cm (2 in.) of termination with a descriptive identifier.
C. Permanently label or code each point of field terminal strips to show the instrument or item served.
D. Identify control panels with minimum 1 cm (½ in.) letters on laminated plastic nameplates.
E. Identify all other control components with permanent labels. All plug-in components shall be labeled such that label removal of the component does not remove the label.
F. Identify room sensors related to terminal boxes or valves with nameplates.
G. Manufacturers' nameplates and UL or CSA labels shall be visible and legible after equipment is installed.
H. Identifiers shall match record documents.

3.14 CONTROLLERS

A. Provide a separate controller for each AHU or other HVAC system. A DDC controller may control more than one system provided that all points associated with the system are assigned to the same DDC controller. Points used for control loop reset, such as outside air or space temperature, are exempt from this requirement.
B. Building Controllers and Custom Application Controllers shall be selected to provide the required I/O point capacity required to monitor all of the hardware points listed in Section 23 09 93 (Sequences of Operation).

3.15 PROGRAMMING

A. Provide sufficient internal memory for the specified sequences of operation and trend logging.
B. Point Naming. Name points as shown on the equipment points list provided with each sequence of operation. See Section 23 09 93 (Sequences of Operation). If character limitations or space restrictions make it advisable to shorten the name, the abbreviations given in Appendix B to Section 23 09 93 may be used. Where multiple points with the same name reside in the same controller, each point name may be customized with its associated Program Object number. For example, "Zone Temp 1" for Zone 1, "Zone Temp 2" for Zone 2.
C. Software Programming.
   1. Provide programming for the system and adhere to the sequences of operation provided. All other system programming necessary for the operation of the system, but not specified in this

document, also shall be provided by the contractor. Embed into the control program sufficient comment statements to clearly describe each section of the program. The comment statements shall reflect the language used in the sequences of operation. Use the appropriate technique based on the following programming types:

a. Text-based:
   i. Must provide actions for all possible situations
   ii. Must be modular and structured
   iii. Must be commented
b. Graphic-based:
   i. Must provide actions for all possible situations
   ii. Must be documented
c. Parameter-based:
   i. Must provide actions for all possible situations
   ii. Must be documented.

D. Operator Interface.
   1. Standard Graphics. Provide graphics for all mechanical systems and floor plans of the building. This includes each chilled water system, hot water system, chiller, boiler, air handler, and all terminal equipment. Point information on the graphic displays shall dynamically update. Show on each graphic all input and output points for the system. Also show relevant calculated points such as setpoints. As a minimum, show on each equipment graphic the input and output points and relevant calculated points as indicated on the applicable Points List in Section 23 09 93.
   2. The contractor shall provide all the labor necessary to install, initialize, start up, and troubleshoot all operator interface software and its functions as described in this section. This includes any operating system software, the operator interface database, and any third-party software installation and integration required for successful operation of the operator interface.

3.16 CONTROL SYSTEM CHECKOUT AND TESTING

A. Startup Testing. All testing listed in this article shall be performed by the contractor and shall make up part of the necessary verification of an operating control system. This testing shall be completed before the owner's representative is notified of the system demonstration.
   1. The contractor shall furnish all labor and test apparatus required to calibrate and prepare for service of all instruments, controls, and accessory equipment furnished under this specification.
   2. Verify that all control wiring is properly connected and free of all shorts and ground faults. Verify that terminations are tight.
   3. Enable the control systems and verify calibration of all input devices individually. Perform calibration procedures according to manufacturers' recommendations.
   4. Verify that all binary output devices (relays, solenoid valves, two-position actuators and control valves, magnetic starters, etc.) operate properly and that the normal positions are correct.
   5. Verify that all analog output devices (I/Ps, actuators, etc.) are functional, that start and span are correct, and that direction and normal positions are correct. The contractor shall check all control valves and automatic dampers to ensure proper action and closure. The contractor shall make any necessary adjustments to valve stem and damper blade travel.
   6. Verify that the system operation adheres to the sequences of operation. Simulate and observe all modes of operation by overriding and varying inputs and schedules. Tune all DDC loops.
   7. Alarms and Interlocks:

a. Check each alarm separately by including an appropriate signal at a value that will trip the alarm.
b. Interlocks shall be tripped using field contacts to check the logic, as well as to ensure that the fail-safe condition for all actuators is in the proper direction.
c. Interlock actions shall be tested by simulating alarm conditions to check the initiating value of the variable and interlock action

3.17 CONTROL SYSTEM DEMONSTRATION AND ACCEPTANCE

A. Demonstration.
1. Prior to acceptance, the control system shall undergo a series of performance tests to verify operation and compliance with this specification. These tests shall occur after the Contractor has completed the installation, started up the system, and performed his/her own tests.
2. The tests described in this section are to be performed in addition to the tests that the contractor performs as a necessary part of the installation, start-up, and debugging process and as specified in the "Control System Checkout and Testing" article in Part 3 of this specification. The engineer will be present to observe and review these tests. The engineer shall be notified at least 10 days in advance of the start of the testing procedures.
3. The demonstration process shall follow that approved in Part 1, "Submittals." The approved checklists and forms shall be completed for all systems as part of the demonstration.
4. The contractor shall provide at least two persons equipped with two-way communication and shall demonstrate actual field operation of each control and sensing point for all modes of operation including day, night, occupied, unoccupied, fire/smoke alarm, seasonal changeover, and power failure modes. The purpose is to demonstrate the calibration, response, and action of every point and system. Any test equipment required to prove the proper operation shall be provided by and operated by the contractor.
5. As each control input and output is checked, a log shall be completed showing the date, technician’s initials, and any corrective action taken or needed.
6. Demonstrate compliance with Part 1, "System Performance."
7. Demonstrate compliance with sequences of operation through all modes of operation.
8. Demonstrate complete operation of operator interface.
9. Additionally, the following items shall be demonstrated:
a. DDC loop response. The contractor shall supply trend data output in a graphical form showing the step response of each DDC loop. The test shall show the loop’s response to a change in set point, which represents a change of actuator position of at least 25% of its full range. The sampling rate of the trend shall be from 10 seconds to 3 minutes, depending on the speed of the loop. The trend data shall show for each sample the set point, actuator position, and controlled variable values. Any loop that yields unreasonably under-damped or over-damped control shall require further tuning by the Contractor.
b. Demand limiting. The contractor shall supply a trend data output showing the action of the demand limiting algorithm. The data shall document the action on a minute-by-minute basis over at least a 30-minute period. Included in the trend shall be building kW, demand limiting set point, and the status of sheddable equipment outputs.
c. Optimum start/stop. The contractor shall supply a trend data output showing the capability of the algorithm. The change-of-value or change-of-state trends shall include the output status of all optimally started and stopped equipment, as well as temperature sensor inputs of affected areas.
d. Interface to the building fire alarm system.

e. Operational logs for each system that indicate all set points, operating points, valve positions, mode, and equipment status shall be submitted to the architect/engineer. These logs shall cover three 48-hour periods and have a sample frequency of not more than 10 minutes. The logs shall be provided in both printed and disk formats.

10. Any tests that fail to demonstrate the operation of the system shall be repeated at a later date. The contractor shall be responsible for any necessary repairs or revisions to the hardware or software to successfully complete all tests.

B. Acceptance.

1. All tests described in this specification shall have been performed to the satisfaction of both the engineer and owner prior to the acceptance of the control system as meeting the requirements of completion. Any tests that cannot be performed due to circumstances beyond the control of the contractor may be exempt from the completion requirements if stated as such in writing by the engineer. Such tests shall then be performed as part of the warranty.
2. The system shall not be accepted until all forms and checklists completed as part of the demonstration are submitted and approved as required in Part 1, "Submittals."

3.18 CLEANING

A. The contractor shall clean up all debris resulting from his/her activities daily. The contractor shall remove all cartons, containers, crates, etc., under his/her control as soon as their contents have been removed. Waste shall be collected and placed in a designated location.
B. At the completion of work in any area, the contractor shall clean all work, equipment, etc., keeping it free from dust, dirt, and debris, etc.
C. At the completion of work, all equipment furnished under this section shall be checked for paint damage, and any factory-finished paint that has been damaged shall be repaired to match the adjacent areas. Any cabinet or enclosure that has been deformed shall be replaced with new material and repainted to match the adjacent areas.

3.19 TRAINING

A. Provide training for a designated staff of Owner’s representatives. Training shall be provided via self-paced training, web-based or computer-based training, classroom training, or a combination of training methods.
B. Training shall enable students to accomplish the following objectives.

1. Day-to-day Operators:
   a. Proficiently operate the system
   b. Understand control system architecture and configuration
   c. Understand DDC system components
   d. Understand system operation, including DDC system control and optimizing routines (algorithms)
   e. Operate the workstation and peripherals
   f. Log on and off the system
   g. Access graphics, point reports, and logs
   h. Adjust and change system set points, time schedules, and holiday schedules
   i. Recognize malfunctions of the system by observation of the printed copy and graphical visual signals
   j. Understand system drawings and Operation and Maintenance manual
   k. Understand the job layout and location of control components
   l. Access data from DDC controllers and ASCs
   m. Operate portable operator's terminals
2. Advanced Operators:

a. Make and change graphics on the workstation
b. Create, delete, and modify alarms, including annunciation and routing of these
c. Create, delete, and modify point trend logs and graph or print these both on an ad-hoc basis and at user-definable time intervals
d. Create, delete, and modify reports
e. Add, remove, and modify system's physical points
f. Create, modify, and delete programming
g. Add panels when required
h. Add operator interface stations
i. Create, delete, and modify system displays, both graphical and others
j. Perform DDC system field checkout procedures
k. Perform DDC controller unit operation and maintenance procedures
l. Perform workstation and peripheral operation and maintenance procedures
m. Perform DDC system diagnostic procedures
n. Configure hardware including PC boards, switches, communication, and I/O points
o. Maintain, calibrate, troubleshoot, diagnose, and repair hardware
p. Adjust, calibrate, and replace system components

3. System Managers/Administrators:
   a. Maintain software and prepare backups
   b. Interface with job-specific, third-party operator software
   c. Add new users and understand password security procedures

C. Organize the training into sessions or modules for the three levels of operators listed above. (Day-to-Day Operators, Advanced Operators, System Managers and Administrators). Students will receive one or more of the training packages, depending on knowledge level required.
D. Provide course outline and materials according to the "Submittals" article in Part 1 of this specification. Provide one copy of training material per student.
E. The instructor(s) shall be factory-trained and experienced in presenting this material.
F. Classroom training shall be done using a network of working controllers representative of installed hardware.

3.20 SEQUENCES OF OPERATION

See Section Control Drawings.

3.21 CONTROL VALVE INSTALLATION

A. Valve submittals shall be coordinated for type, quantity, size, and piping configuration to ensure compatibility with pipe design.
B. Slip-stem control valves shall be installed so that the stem position is not more than 60 degrees from the vertical up position. Ball type control valves shall be installed with the stem in the horizontal position.
C. Valves shall be installed in accordance with the manufacturer's recommendations.
D. Control valves shall be installed so that they are accessible and serviceable and so that actuators may be serviced and removed without interference from structure or other pipes and/or equipment.
E. Isolation valves shall be installed so that the control valve body may be serviced without draining the supply/return side piping system. Unions shall be installed at all connections to screw-type control valves.
F. Provide tags for all control valves indicating service and number. Tags shall be brass, 1.5 inch in diameter, with ¼ inch high letters. Securely fasten with chain and hook. Match identification numbers as shown on approved controls shop drawings.

3.22 CONTROL DAMPER INSTALLATION

A. Damper submittals shall be coordinated for type, quantity, and size to ensure compatibility with sheet metal design.
B. Duct openings shall be free of any obstruction or irregularities that might interfere with blade or linkage rotation or actuator mounting. Duct openings shall measure ¼ in. larger than damper dimensions and shall be square, straight, and level.
C. Individual damper sections, as well as entire multiple section assemblies, must be completely square and free from racking, twisting, or bending. Measure diagonally from upper corners to opposite lower corners of each damper section. Both dimensions must be within 0.3 cm (1/8 in.) of each other.
D. Follow the manufacturer's instructions for field installation of control dampers. Unless specifically designed for vertical blade application, dampers must be mounted with blade axis horizontal.
E. Install extended shaft or jackshaft according to manufacturer's instructions. (Typically, a sticker on the damper face shows recommended extended shaft location. Attach shaft on labeled side of damper to that blade.)
F. Damper blades, axles, and linkage must operate without binding. Before system operation, cycle damper after installation to ensure proper operation. On multiple section assemblies, all sections must open and close simultaneously.
G. Provide a visible and accessible indication of damper position on the drive shaft end.
H. Support ductwork in area of damper when required to prevent sagging due to damper weight.
I. After installation of low-leakage dampers with seals, caulk between frame and duct or opening to prevent leakage around perimeter of damper.

3.23 SMOKE DAMPER INSTALLATION

A. The contractor shall coordinate all smoke and smoke/fire damper installation, wiring, and checkout to ensure that these dampers function properly and that they respond to the proper fire alarm system general, zone, and/or detector trips. The contractor shall immediately report any discrepancies to the engineer no less than two weeks prior to inspection by the code authority having jurisdiction.
B. Provide complete submittal data to controls system subcontractor for coordination of duct smoke detector interface to HVAC systems.

3.24 DUCT SMOKE DETECTION

A. Submit data for coordination of duct smoke detector interface to HVAC systems as required in Part 1, "Submittals."
B. This Contractor shall provide a dry-contact alarm output in the same room as the HVAC equipment to be controlled.

3.25 CONTROLS COMMUNICATION PROTOCOL

A. General. The electronic controls packaged with this equipment shall communicate with the building direct digital control (DDC) system. The DDC system shall communicate with these controls to read the information and change the control setpoints as shown in the points list, sequences of operation, and control schematics. The information to be communicated between the DDC system and these controls shall be in the standard object format as defined in ANSI/ASHRAE Standard 135 (BACnet). Controllers shall communicate with other BACnet objects on the internetwork using the Read (Execute) Property service as defined in Clause 15.5 of Standard 135.
B. Distributed Processing. The controller shall be capable of stand-alone operation and shall continue to provide control functions if the network connection is lost.
C. I/O Capacity. The controller shall contain sufficient I/ O capacity to control the target system.
D. The Controller shall have a physical connection for a laptop computer or a portable operator's tool.
E. Environment. The hardware shall be suitable for the anticipated ambient conditions.
    1. Controllers used outdoors and/or in wet ambient conditions shall be mounted within waterproof enclosures and shall be rated for operation at 40°C to 60°C (40°F to 140°F).

2. Controllers used in conditioned space shall be mounted in dust-proof enclosures and shall be rated for operation at 0°C to 50°C (32°F to 120°F).

F. Serviceability. Provide diagnostic LEDs for power, communication, and processor. All wiring connections shall be made to field removable, modular terminal strips or to a termination card connected by a ribbon cable.

G. Memory. The Controller shall maintain all BIOS and programming information in the event of a power loss for at least 30 days.

H. Power. Controller shall be able to operate at 90% to 110% of nominal voltage rating.

I. Transformer. Power supply for the Controller must be rated at minimum of 125% of ASC power consumption and shall be fused or current limiting type.

3.26 START-UP AND CHECKOUT PROCEDURES

A. Start up, check out, and test all hardware and software and verify communication between all components.
   1. Verify that all control wiring is properly connected and free of all shorts and ground faults. Verify that terminations are tight.
   2. Verify that all analog and binary input/output points read properly.
   3. Verify alarms and interlocks.
   4. Verify operation of the integrated system

END OF SECTION

SECTION 23 11 23 - FACILITY NATURAL-GAS PIPING

PART 1 GENERAL

1.1 SUMMARY

A. Section Includes:
1. Natural gas piping buried.
2. Natural gas piping above grade.
3. Unions and flanges.
4. Valves – reference section 230523 – General Duty Valves for HVAC.
5. Pipe hangers and supports.
6. Strainers.
7. Natural gas pressure regulators.
8. Natural gas pressure relief valves.
9. Underground pipe markers.

B. Related Sections:
1. Section 07 84 00 - Firestopping: Product requirements for firestopping for placement by this section.
2. Division 08 - Access Doors and Frames: Access doors for concealed valves and accessories.
3. Section 09 90 00 - Painting and Coating: Product requirements for painting for placement by this section.
4. Section 23 05 03 - Pipes and Tubes for HVAC Piping and Equipment: Piping materials for gas piping systems.
5. Section 23 05 23 - General-Duty Valves for HVAC Piping: Valves for gas piping systems.
6. Section 23 05 29 - Hangers and Supports for HVAC Piping and Equipment: Product requirements for pipe hangers and supports [and firestopping] for placement by this section.
7. Section 23 05 53 - Identification for HVAC Piping and Equipment: Product requirements for valve and pipe identification for placement by this section.

1.2 REFERENCES

A. American National Standards Institute:
1. ANSI Z21.15 - Manually Operated Gas Valves for Appliances, Appliance Connector Valves and Hose End Valves.

B. American Society of Mechanical Engineers:
1. ASME B16.3 - Malleable Iron Threaded Fittings.
2. ASME B16.26 - Cast Copper Alloy Fittings for Flared Copper Tubes.
3. ASME B16.33 - Manually Operated Metallic Gas Valves for Use in Gas Piping Systems Up to 125 psig (sizes 1/2 - 2).
4. ASME B31.9 - Building Services Piping.
5. ASME Section IX - Boiler and Pressure Vessel Code - Welding and Brazing Qualifications.

C. ASTM International:
1. ASTM A53/A53M - Standard Specification for Pipe, Steel, Black and Hot-Dipped, Zinc-Coated, Welded and Seamless.

2. ASTM A234/A234M - Standard Specification for Piping Fittings of Wrought Carbon Steel and Alloy Steel for Moderate and High Temperature Service.
3. ASTM B88 - Standard Specification for Seamless Copper Water Tube.
4. ASTM B280 - Standard Specification for Seamless Copper Tube for Air Conditioning and Refrigeration Field Service.
5. ASTM B749 - Standard Specification for Lead and Lead Alloy Strip, Sheet, and Plate Products.
6. ASTM F708 - Standard Practice for Design and Installation of Rigid Pipe Hangers.

D. American Welding Society:
1. AWS D1.1 - Structural Welding Code - Steel.

E. American Water Works Association:
1. AWWA C105 - American National Standard for Polyethylene Encasement for Ductile-Iron Pipe Systems.

F. Manufacturers Standardization Society of the Valve and Fittings Industry:
1. MSS SP 58 - Pipe Hangers and Supports - Materials, Design and Manufacturer.
2. MSS SP 67 - Butterfly Valves.
3. MSS SP 69 - Pipe Hangers and Supports - Selection and Application.
4. MSS SP 78 - Cast Iron Plug Valves, Flanged and Threaded Ends.
5. MSS SP 89 - Pipe Hangers and Supports - Fabrication and Installation Practices.
6. MSS SP 110 - Ball Valves Threaded, Socket-Welding, Solder Joint, Grooved and Flared Ends.

G. National Fire Protection Association:
1. NFPA 54 - National Fuel Gas Code.

H. Underwriters Laboratories Inc.:
1. UL 842 - Valves for Flammable Fluids.

1.3 SYSTEM DESCRIPTION

A. Where more than one piping system material is specified, provide compatible system components and joints. Use non-conducting dielectric connections when joining dissimilar metals in systems.

B. Provide flanges, unions, or couplings at locations requiring servicing. Use unions, flanges, or couplings downstream of valves and at equipment connections. Do not use direct welded or threaded connections to valves, equipment.

C. Provide pipe hangers and supports in accordance with ASME B31.9, ASTM F708, MSS SP 58, MSS SP 69, and MSS SP 89.

D. Use re-greasable plug valves for shut-off and to isolate equipment, part of systems, or vertical risers.

1.4 SUBMITTALS

A. Division 01 - Submittal Procedures: Submittal procedures.

B. Product Data:
   1. Piping: Submit data on pipe materials, fittings, and accessories. Submit manufacturers catalog information.
   2. Valves: Submit manufacturers catalog information with valve data and ratings for each service.
   3. Hangers and Supports: Submit manufacturers catalog information including load capacity.
   4. Piping Specialties: Submit manufacturers catalog information including capacity, rough-in requirements, and service sizes for the following:
      a. Strainers.
      b. Natural gas pressure regulators.
      c. Natural gas pressure relief valves.

C. Design Data: Indicate pipe size. Indicate load carrying capacity of trapeze, multiple pipe, and riser support hangers.

D. Test Reports: Indicate results of piping system pressure test.

E. Manufacturer's Certificate: Certify Products meet or exceed specified requirements.

F. Welders Certificates: Certify welders employed on the Work, verifying AWS qualification within previous 12 months.

1.5 CLOSEOUT SUBMITTALS

A. Division 01 - Execution and Closeout Requirements: Closeout procedures.

B. Project Record Documents: Record actual locations of valves, piping system, and system components.

C. Operation and Maintenance Data: Submit for valves and gas pressure regulators installation instructions, spare parts lists, and exploded assembly views.

1.6 QUALITY ASSURANCE

A. Perform natural gas Work in accordance with NFPA 54.

B. Perform work in accordance with International Gas Code – 2009 Edition and Texas Gas Service requirements.

C. Perform Work in accordance with ASME B31.9 code for installation of piping systems and ASME Section IX for welding materials and procedures.

D. Furnish shutoff valves complying with ASME B16.33 or ANSI Z21.15.

1.7 QUALIFICATIONS

A. Manufacturer: Company specializing in manufacturing products specified in this section with minimum three years documented experience.

1.8 PRE-INSTALLATION MEETINGS

A. Division 01 - Administrative Requirements: Pre-installation meeting.

B. Convene minimum one week prior to commencing work of this section.

1.9 DELIVERY, STORAGE, AND HANDLING

A. Division 01 - Product Requirements: Product storage and handling requirements.

B. Accept valves on site in shipping containers with labeling in place. Inspect for damage.

C. Protect piping and fittings from soil and debris with temporary end caps and closures. Maintain in place until installation. Furnish temporary protective coating on cast iron and steel valves.

1.10 ENVIRONMENTAL REQUIREMENTS

A. Division 01 - Product Requirements.

B. Do not install underground piping when bedding is wet or frozen.

1.11 FIELD MEASUREMENTS

A. Verify field measurements prior to fabrication.

1.12 COORDINATION

A. Division 01 - Administrative Requirements: Requirements for coordination.

B. Coordinate trenching, bedding, and backfilling of buried piping systems with requirements of these specifications.

1.13 WARRANTY

A. Division 01 - Execution and Closeout Requirements: Product warranties and product bonds.

B. Furnish five year manufacturer warranty for valves excluding packing.

1.14 EXTRA MATERIALS

A. Division 01 - Execution and Closeout Requirements: Spare parts and maintenance products.

B. Furnish two packing kits for each type and size valve.

PART 2 PRODUCTS

2.1 NATURAL GAS PIPING, BURIED BEYOND 5 FEET OF BUILDING

A. Polyethylene Pipe: ASTM D2513, SDR 26

1. Fittings: ASTM D2513; ASTM D2683.
2. Joints: Fusion Welded.

2.2 NATURAL GAS PIPING, BURIED WITHIN 5 FEET OF BUILDING

A. Steel Pipe: ASTM A53/A53M Schedule 40 black.
1. Fittings: ASTM A234/A234M forged steel welding type.
2. Joints: ASME B31.9, welded.
3. Jacket: AWWA C105 polyethylene jacket or double layer, half-lapped 10 mil polyethylene tape.

2.3 NATURAL GAS PIPING, ABOVE GRADE MEDIUM PRESSURE

A. Steel Pipe: ASTM A53/A53M Schedule 40 black.
1. Fittings: ASTM A234/A234M forged steel welding type.
2. Joints: ASME B31.9, welded.

2.4 NATURAL GAS PIPING, ABOVE GRADE LOW PRESSURE

A. Steel Pipe: ASTM A53/A53M Schedule 40 black.
1. Fittings: ASME B16.3, malleable iron, or ASTM A234/A234M forged steel welding type.
2. Joints: Threaded.

2.5 UNIONS AND FLANGES

A. Unions for Pipe 2 inches and Smaller:
1. Ferrous Piping: Class 150, malleable iron, threaded.
2. Copper Piping: Class 150, bronze unions with [soldered] [brazed joints].
3. Dielectric Connections: Union with galvanized or plated steel threaded end, copper solder end, water impervious isolation barrier.

B. Flanges for Pipe 2-1/2 inches and Larger:
1. Ferrous Piping: Class 150, forged steel, slip-on flanges.
2. Copper Piping: Class 150, slip-on bronze flanges.
3. Gaskets: 1/16 inch thick preformed neoprene gaskets.

2.6 BALL VALVES

A. Manufacturers:
1. Crane Valve, North America Model.
2. Hammond Valve.
3. Milwaukee Valve Company.
4. NIBCO, Inc.
5. Stockham Valves & Fittings.
6. Substitutions: Prior Approval Required.

B. 1/4 inch to 3/4 inch : MSS SP 110, Class 125, two piece, threaded ends, bronze body, chrome plated bronze ball, reinforced teflon seats, blow-out proof stem, lever handle, UL 842 listed for flammable liquids and LPG, full port.

2.7 PLUG VALVES

A. Manufacturers:
1. DeZURIK, Unit of SPX Corp.
2. Flow Control Equipment, Inc.
3. Homestead Valve
4. Substitutions: Prior Approval Required.

B. 1 inch to 2 inches: MSS SP 78, Class 150, semi-steel construction, round port, full pipe area, pressure lubricated, teflon packing, threaded ends. Furnish one plug valve wrench for every ten plug-valves with minimum of one wrench.

C. 2-1/2 inches and Larger: MSS SP 78, Class 150, semi-steel construction, round port, full pipe area, pressure lubricated, teflon packing, flanged ends. Furnish worm gear-operated.

2.8 REGULATOR VENT PIPING, ABOVE GRADE

A. Indoors: Same as natural gas piping, above grade.

B. Outdoors: PVC pipe, tubing, and fittings, UL 651.

2.9 STRAINERS

A. Manufacturers:
1. Mueller Steam Specialty.
2. O.C. Keckley Company.
3. Spirax Sarco, Inc.
4. Substitutions: Not Permitted without prior approval.

B. 2 inch and Smaller: Screwed brass or iron body for 175 psig working pressure, Y pattern with 1/32 inch stainless steel perforated screen.

C. 2-1/2 inch to 4 inch: Flanged iron body for 175 psig working pressure, Y pattern with 3/64 inch stainless steel perforated screen.

D. 5 inch and Larger: Flanged iron body for 175 psig working pressure, basket pattern with 1/8 inch stainless steel perforated screen.

2.10 NATURAL GAS PRESSURE REGULATORS

A. Product Description: Spring loaded, general purpose, self-operating service regulator including internal relief type diaphragm assembly and vent valve. Diaphragm case can be rotated 360 degrees in relation to body.
1. Comply with ANSI Z21.80.
2. Temperatures: minus 20 degrees F to 150 degrees F.

3. Body: Cast iron.
4. Spring case, lower diaphragm casing, union ring, seat ring and disk holder: Aluminum.
5. Disk, diaphragm, and O-ring: Nitrile.
6. Maximum inlet pressure: 150 psig.
7. Furnish sizes 2 inches and smaller with threaded ends. Furnish sizes 2-1/2 inches and larger with flanged ends.

2.11 NATURAL GAS PRESSURE RELIEF VALVES

A. Product Description: Spring loaded type relief valve.
1. Body: Aluminum.
2. Diaphragm: Nitrile.
3. Orifice: Stainless steel.
4. Maximum operating temperature: 150 degrees F.
5. Inlet Connections: Threaded.
6. Outlet or Vent Connection: Same size as inlet connection.

2.12 UNDERGROUND PIPE MARKERS

A. Trace Wire: Magnetic detectable conductor, brightly colored plastic covering, imprinted with "Natural Gas Service" in large letters.

PART 3 EXECUTION

3.1 EXAMINATION

A. Division 01 - Administrative Requirements: Coordination and project conditions.

B. Verify excavations are to required grade, dry, and not over-excavated.

3.2 PREPARATION

A. Ream pipe and tube ends. Remove burrs. Bevel plain end ferrous pipe.

B. Remove scale and dirt, on inside and outside, before assembly.

C. Prepare piping connections to equipment with flanges or unions.

3.3 INSTALLATION - PIPE HANGERS AND SUPPORTS

A. Install pipe hangers and supports in accordance with Section 23 05 29.

3.4 INSTALLATION

A. Install natural gas piping in accordance with NFPA 54 and International Gas Code 2009.

B. Provide non-conducting dielectric connections wherever jointing dissimilar metals.

C. Route piping in orderly manner and maintain gradient.

D. Where required, bend pipe with pipe bending tools in accordance with procedures intended for that purpose.

E. Install piping to conserve building space and not interfere with use of space.

F. Size and install gas piping to provide sufficient gas to supply maximum appliance demand at pressure higher than appliance minimum inlet pressure.

G. Group piping whenever practical at common elevations.

H. Install piping to allow for expansion and contraction without stressing pipe, joints, or connected equipment.

I. Sleeve pipe passing through partitions, walls and floors. Refer to Section 23 05 29.

J. Install firestopping at fire rated construction perimeters and openings containing penetrating sleeves and piping. Refer to Section 07 84 00.

K. Provide clearance for installation of insulation and access to valves and fittings.

L. Provide access where valves and fittings are not exposed. Coordinate size and location of access doors with Section 08 31 13.

M. Where pipe support members are welded to structural building framing, scrape, brush clean, weld, and apply one coat of zinc rich primer. Refer to Section 05 12 00.

N. Provide support for utility meters in accordance with requirements of utility company.

O. Install vent piping from gas pressure reducing valves to outdoors and terminate in weatherproof hood. Protect vent against entry of insects and foreign material.
   1. Minimum Vent Size: Connection size at regulator vent connection.
   2. Run individual vent line from each relief device, independent of breather vents.

P. Breather vents may be manifolded together with piping sized for combined appliance vent requirements.

Q. Prepare pipe, fittings, supports, and accessories not pre-finished, ready for finish painting. Refer to Division 09.

R. Install identification on piping systems including underground piping. Refer to Section 23 05 53.

S. Install valves with stems upright or horizontal, not inverted. Install plug valves in natural gas systems; Ball valves for natural gas service are only allowed at the device for line sizes ¾” and smaller. If isolation required further than the device itself; provide plug valves.

T. Protect piping systems from entry of foreign materials by temporary covers, completing sections of the Work, and isolating parts of completed system.

U. Install medium pressure gas pressure regulator with tee fitting between regulator and upstream shutoff valve. Cap or plug one opening of tee fitting.

V. Install medium pressure gas pressure regulator with tee fitting not less than 10 pipe diameters down stream of regulator. Cap or plug one opening of tee fitting.

W. Install gas pressure regulator with independent vent full size opening on regulator and terminate outdoors.

3.5 FIELD QUALITY CONTROL

A. Division 01 - Quality Requirements: Field inspecting, testing, adjusting, and balancing.

B. Where gas appliance will be damaged by test pressure, disconnect appliance and cap piping during pressure test. Reconnect appliance after pressure test and leak test connection.

C. Where gas appliance is designed for operating pressures equal to or greater than piping test pressure, provide gas valve to isolate appliance or equipment from gas test pressure.

D. Pressure test natural gas piping to 100 psig for a period of 24 hours using a chart recorder. Submit test results as part of the close-out submittals.

E. Inspect, test and purge gas piping in accordance with International Gas Code 2009 Edition and Texas Gas Service requirements.

F. Where new branch piping is extended from existing system, pressure test new branch piping only. Leak test joint between new and existing piping with noncorrosive leak detection fluid or other approved method.

G. When pressure tests do not meet specified requirements, remove defective work, replace and retest.

H. Immediately after gas is applied to a new system, or a system has been restored after gas service interruption, check pipe for leakage.
   1. Where leakage is detected, shut off gas supply until necessary repairs are complete.

I. Do not place appliances in service until leak testing and repairs are complete.

3.6 SCHEDULES

A. Pipe Hanger Spacing:

PIPE SIZE Inches	COPPER TUBING MAXIMUM HANGER SPACING Feet	STEEL PIPE MAXIMUM HANGER SPACING Feet	COPPER TUBING MINIMUM HANGER ROD DIAMETER Inches	STEEL PIPE MINIMUM HANGER ROD DIAMETER Inches
1/2	4	6	3/8	3/8
3/4	6	7	3/8	3/8
1	6	7	3/8	3/8
1-1/4	8	7	3/8	3/8
1-1/2	8	9	3/8	3/8
2	8	10	3/8	3/8
2-1/2	8	10	1/2	1/2
3	8	10	1/2	1/2
4	8	10	1/2	5/8
5	8	10	1/2	5/8
6	8	10	5/8	3/4
8	8	10	3/4	3/4

END OF SECTION

SECTION 23 21 16 - HYDRONIC PIPING SPECIALTIES

PART 1 GENERAL

1.1 SUMMARY

A. Section Includes:
1. Positive displacement meters.
2. Heat consumption meters.
3. Liquid flow meters.
4. Pressure gages.
5. Pressure gage taps.
6. Thermometers.
7. Thermometer supports.
8. Test plugs.
9. Flexible connectors.
10. Diaphragm-type expansion tanks.
11. Air vents.
12. Air separators.
13. Strainers.
14. Pump suction fittings.
15. Combination pump discharge valves.
16. Flow controls.
17. Flow meters.
18. Relief valves.
19. Buffer Tank

B. Related Sections:
1. Section 23 21 13 - Hydronic Piping: Execution requirements for piping connections to products specified by this section.
2. Section 23 21 23 - Hydronic Pumps: Execution requirements for piping connections to products specified by this section.

1.2 REFERENCES

A. American Society of Mechanical Engineers:
1. ASME B40.1 - Gauges - Pressure Indicating Dial Type - Elastic Element.
2. ASME Section VIII - Boiler and Pressure Vessel Code - Pressure Vessels.

B. ASTM International:
1. ASTM E1 - Standard Specification for ASTM Thermometers.
2. ASTM E77 - Standard Test Method for Inspection and Verification of Thermometers.

C. American Water Works Association:
1. AWWA C700 - Cold-Water Meters - Displacement Type, Bronze Main Case.
2. AWWA C701 - Cold-Water Meters - Turbine Type, for Customer Service.
3. AWWA C702 - Cold-Water Meters - Compound Type.

4. AWWA C706 - Direct-Reading, Remote-Registration Systems for Cold-Water Meters.
5. AWWA M6 - Water Meters - Selection, Installation, Testing, and Maintenance.

D. Underwriters Laboratories Inc.:
1. UL 393 - Indicating Pressure Gauges for Fire-Protection Service.
2. UL 404 - Gauges, Indicating Pressure, for Compressed Gas Service.

1.3 PERFORMANCE REQUIREMENTS

A. Flexible Connectors: Provide at or near pumps where piping configuration does not absorb vibration.

1.4 SUBMITTALS

A. Division 01 - Submittal Procedures: Submittal procedures.

B. Product Data: Submit for manufactured products and assemblies used in this Project.
1. Manufacturer’s data and list indicating use, operating range, total range, accuracy, and location for manufactured components.
2. Submit product description, model, dimensions, component sizes, rough-in requirements, service sizes, and finishes.
3. Submit schedule indicating manufacturer, model number, size, location, rated capacity, load served, and features for each piping specialty.
4. Submit electrical characteristics and connection requirements.

C. Manufacturer's Installation Instructions: Submit hanging and support methods, joining procedures, application, selection, and hookup configuration. Include pipe and accessory elevations.

D. Manufacturer's Certificate: Certify products meet or exceed specified requirements.

1.5 CLOSEOUT SUBMITTALS

A. Division 01 - Execution and Closeout Requirements: Closeout procedures.

B. Project Record Documents: Record actual locations of actual locations of components and instrumentation, flow controls, flow meters, etc.

C. Operation and Maintenance Data: Submit instructions for calibrating instruments, installation instructions, assembly views, servicing requirements, lubrication instruction, and replacement parts list.

1.6 DELIVERY, STORAGE, AND HANDLING

A. Division 01 - Product Requirements: Product storage and handling requirements.

B. Accept piping specialties on site in shipping containers with labeling in place. Inspect for damage.

C. Provide temporary protective coating on cast iron and steel valves.

D. Protect systems from entry of foreign materials by temporary covers, caps and closures, completing sections of the work, and isolating parts of completed system until installation.

1.7 ENVIRONMENTAL REQUIREMENTS

A. Division 01 - Product Requirements.

B. Do not install instruments when areas are under construction, except rough in, taps, supports and test plugs.

1.8 FIELD MEASUREMENTS

A. Verify field measurements before fabrication.

1.9 WARRANTY

A. Division 01 - Execution and Closeout Requirements: Product warranties and product bonds.

B. Furnish five year manufacturer warranty for piping specialties.

1.10 MAINTENANCE MATERIALS

A. Section 01 70 00 - Execution and Closeout Requirements: Spare parts and maintenance materials.

B. Furnish two bottles of red gage oil for static pressure gages.

1.11 EXTRA MATERIALS

A. Division 01 - Execution and Closeout Requirements: Spare parts and maintenance products.

PART 2 PRODUCTS

2.1 PRESSURE GAGES

A. Gage: ASME B40.1, stainless steel case and crimped aluminum ring. Window for the dial size will be grilamid. Movement will be brass with a bronze bourdon tube and brass socket. Dial face will be white with black figures and pointer. Accuracy will be +/- 1.0% of scale range. Gauge cases shall be glycerin filled. Pressure Gauges shall be Trerice D821 or approved equal.
1. Scale: Psi.

2.2 PRESSURE GAGE TAPS

A. Needle Valve: Stainless Steel, 1/4 inch NPT for minimum 300 psi.

B. Ball Valve: Stainless Steel, 1/8 inch NPT for 250 psi.

C. Pulsation Damper: Pressure snubber, brass with 1/4 inch NPT connections.

D. Siphon: Stainless Steel, 1/4 inch NPT angle or straight pattern.

2.3 STEM TYPE THERMOMETERS

A. Thermometer: Blue reading liquid-in glass adjustable angle, cast aluminum case with cured polyester powder coating, clear acrylic window and brass separable thermowell. Thermometers shall be Trerice BX9 Series or approved equal.
1. Size: 9 inch scale.
2. Window: Clear Acrylic.
3. Stem: Brass, 3/4 inch NPT, 3-1/2 inch long.
4. Accuracy: 2 percent.
5. Calibration: Degrees F
6. .

2.4 THERMOMETER SUPPORTS

A. Socket: Brass separable sockets for thermometer stems with or without extensions, and with cap and chain.

2.5 TEST PLUGS

A. 1/4 inch NPT or 1/2 inch NPT stainless steel fitting and cap for receiving 1/8 inch outside diameter pressure or temperature probe with:
1. Neoprene core for temperatures up to 200 degrees F.
2. Nordel core for temperatures up to 350 degrees F.
3. Viton core for temperatures up to 400 degrees F.

B. Test Kit:
1. Carrying case, internally padded and fitted containing:
a. One 2-1/2 inch diameter pressure gages.
1) Scale range: 0 to 250 psi.
b. One gage adapters with 1/8 inch probes.
c. Two 1-1/2 inch dial thermometers.
1) Scale range: 20 to 120 degrees F.

2.6 FLEXIBLE CONNECTORS

A. Corrugated stainless steel hose with single layer of stainless steel exterior braiding, minimum 9 inches long with copper tube ends; for maximum working pressure 500 psig.

2.7 AIR VENTS

A. Manual Type: Short vertical sections of 2 inch diameter pipe to form air chamber, with 1/8 inch brass needle valve at top of chamber.

B. Float Type:
1. Brass or semi-steel body, copper, polypropylene, or solid non-metallic float, stainless steel valve and valve seat; suitable for system operating temperature and pressure; with isolating valve.

C. Washer Type:
1. Brass with hydroscopic fiber discs, vent ports, adjustable cap for manual shut-off, and integral spring loaded ball check valve.

2.8 STRAINERS

A. Size 2 inch and Smaller:
1. Screwed brass or iron body for 175 psig working pressure, Y pattern with 1/32 inch stainless steel perforated screen.

B. Size 2-1/2 inch to 4 inch:
1. Flanged iron body for 175 psig working pressure, Y pattern with 3/64 inch stainless steel perforated screen.

C. Size 6 inch and Larger:
1. Flanged iron body for 175 psig working pressure, basket pattern with 1/8 inch stainless steel perforated screen.

2.9 FLOW CONTROLS

A. Construction: Brass or bronze body with union on inlet, and outlet, temperature and pressure test plug on inlet and outlet, combination blow-down and back-flush drain.

B. Calibration: Control within 5 percent of design flow over entire operating pressure.

C. Control Mechanism: Stainless steel or nickel plated brass piston or regulator cup, operating against stainless steel helical or wave formed spring.

D. Accessories: In-line strainer on inlet and ball valve on outlet.

2.10 FLOW METERS

A. Orifice type by-pass circuit with direct reading gage, soldered or flanged piping connections for 125 psig working pressure, with shut off valves, and drain and vent connections.

B. Direct reading with insert pitot tube, threaded coupling, for 150 psig working pressure, maximum 240 degrees F, 5 percent accuracy.

C. Cast iron, wafer type, orifice insert flow meter for 250 psig working pressure, with read-out valves equipped with integral check-valves and caps with gaskets.

D. Calibrated, plug type balancing valve with precision-machined orifice, readout valves equipped with integral check valves and caps with gaskets, calibrated nameplate and indicating pointer.

E. Cast iron or bronze, globe style, balancing valve with hand wheel with vernier type ring setting and memory stop, drain connection, readout valves equipped with integral check valves and caps with gaskets.

2.11 RELIEF VALVES

A. Bronze body, Teflon seat, stainless steel stem and springs, automatic, direct pressure actuated capacities ASME certified and labeled.

PART 3 EXECUTION

3.1 INSTALLATION - THERMOMETERS AND GAGES

A. Install one pressure gage for each pump, locate taps before strainers and on suction and discharge of pump; pipe to gage.

B. Install gage taps in piping

C. Install pressure gages with pulsation dampers. Provide [needle valve] [or] [ball valve] to isolate each gage. Extend nipples to allow clearance from insulation.

D. Install thermometers in piping systems in sockets in short couplings. Enlarge pipes smaller than 2-1/2 inches for installation of thermometer sockets. Allow clearance from insulation.

E. Install thermometer sockets adjacent to controls systems thermostat, transmitter, or sensor sockets.

F. Coil and conceal excess capillary on remote element instruments.

G. Provide instruments with scale ranges selected according to service with largest appropriate scale.

H. Install gages and thermometers in locations where they are easily read from normal operating level. Install vertical to 45 degrees off vertical.

I. Adjust gages and thermometers to final angle, clean windows and lenses, and calibrate to zero.

3.2 INSTALLATION - HYDRONIC PIPING SPECIALTIES

A. Locate test plugs adjacent to thermometers and thermometer sockets.

B. Where large air quantities accumulate, provide enlarged air collection standpipes.

C. Install manual air vents at system high points.

D. For automatic air vents in ceiling spaces or other concealed locations, install vent tubing to nearest drain.

3.3 FIELD QUALITY CONTROL

A. Division 01 - Execution and Closeout Requirements: Field inspecting, testing, adjusting, and balancing.

3.4 CLEANING

A. Division 01 - Execution and Closeout Requirements: Requirements for cleaning.

3.5 PROTECTION OF INSTALLED CONSTRUCTION

A. Division 01 - Execution and Closeout Requirements: Requirements for protecting installed construction.

B. Do not install hydronic pressure gauges until after systems are pressure tested.

3.6 SCHEDULES

A. Pressure Gage Tapping Location:
1. All Control valves - inlets and outlets.
2. Heating and Cooling Coils - inlets and outlets.

B. Stem Type Thermometers:
1. Coil banks - inlets and outlets.
2. Water-zone supply and return.
3. After major coils at each equipment with coils.

C. Thermometer Socket Location:
1. All Control valves - inlets and outlets.
2. Reheat coils - inlets and outlets.

END OF SECTION 232116

SECTION 23 31 00 - HVAC DUCTS AND CASINGS

PART 1 GENERAL

1.1 SUMMARY

A. Section Includes:
1. Duct Materials.
2. Insulated flexible ducts.
3. Single wall spiral round ducts.
4. Double wall spiral insulated round ducts.
5. Transverse duct connection system.
6. Ductwork fabrication.
7. Duct cleaning.

B. Related Sections:
1. Division 09 - Painting and Coating: Execution requirements for Weld priming, weather resistant, paint or coating specified by this section.
2. Section 23 05 29 - Hangers and Supports for HVAC Piping and Equipment: Product requirements for hangers, supports and sleeves for placement by this section.
3. Section 23 33 00 - Air Duct Accessories: Product requirements for duct accessories for placement by this section.

1.2 REFERENCES

A. ASTM International:
1. ASTM A36/A36M - Standard Specification for Carbon Structural Steel.
2. ASTM A90/A90M - Standard Test Method for Weight Mass of Coating on Iron and Steel Articles with Zinc or Zinc-Alloy Coatings.
3. ASTM A240/A240M - Standard Specification for Chromium and Chromium-Nickel Stainless Steel Plate, Sheet, and Strip for Pressure Vessels and for General Applications.
4. ASTM A666 - Standard Specification for Annealed or Cold-Worked Austenitic Stainless Steel Sheet, Strip, Plate, and Flat Bar.
5. ASTM A568/A568M - Standard Specification for Steel, Sheet, Carbon, and High-Strength, Low-Alloy, Hot-Rolled and Cold-Rolled, General Requirements for.
6. ASTM A653/A653M - Standard Specification for Steel Sheet, Zinc-Coated (Galvanized) or Zinc-Iron Alloy-Coated (Galvannealed) by the Hot-Dip Process.
7. ASTM A1008/A1008M - Standard Specification for Steel, Sheet, Cold-Rolled, Carbon, Structural, High-Strength Low-Alloy and High-Strength Low-Alloy with Improved Formability.
8. A1011/A1011M-07 Standard Specification for Steel, Sheet and Strip, Hot-Rolled, Carbon, Structural, High-Strength Low-Alloy, High-Strength Low-Alloy with Improved Formability, and Ultra-High Strength
9. ASTM B209 - Standard Specification for Aluminum and Aluminum-Alloy Sheet and Plate.
10. ASTM E84 - Standard Test Method for Surface Burning Characteristics of Building Materials.

B. National Fire Protection Association:
   1. NFPA 90A - Standard for the Installation of Air Conditioning and Ventilating Systems.
   2. NFPA 90B - Standard for the Installation of Warm Air Heating and Air Conditioning Systems.

C. Sheet Metal and Air Conditioning Contractors:
   1. SMACNA - HVAC Air Duct Leakage Test Manual.
   2. SMACNA - HVAC Duct Construction Standard - Metal and Flexible.

D. Underwriters Laboratories Inc.:
   1. UL 181 - Factory-Made Air Ducts and Connectors.

1.3 PERFORMANCE REQUIREMENTS

A. Variation of duct configuration or sizes other than those of equivalent or lower loss coefficient is not permitted except by written permission. Size round ducts installed in place of rectangular ducts in accordance with ASHRAE table of equivalent rectangular and round ducts.

1.4 SUBMITTALS

A. Division 01 - Submittal Procedures: Submittal procedures.

B. Shop Drawings: Submit duct fabrication drawings, drawn to scale not smaller than ¼ inch equals 1 foot, on drawing sheets same size as Contract Documents, indicating:
   1. Fabrication, assembly, and installation details, including plans, elevations, sections, details of components, and attachments to other work.
   2. Duct layout, indicating pressure classifications and sizes in plan view. For exhaust duct systems, indicate classification of materials handled as defined in this section.
   3. Fittings.
   4. Reinforcing details and spacing.
   5. Seam and joint construction details.
   6. Penetrations through fire rated and other walls.
   7. Terminal unit installations.
   8. Hangers and supports, including methods for building attachment, vibration isolation, and duct attachment.

C. Product Data: Submit data for duct materials, and duct connectors.

D. Test Reports: Indicate pressure tests performed. Include date, section tested, test pressure, and leakage rate, following SMACNA HVAC Air Duct Leakage Test Manual.

1.5 CLOSEOUT SUBMITTALS

A. Division 01 - Execution and Closeout Requirements: Closeout procedures.

B. Project Record Documents: Record actual locations of ducts and duct fittings. Record changes in fitting location and type. Show additional fittings used.

1.6 QUALITY ASSURANCE

A. Perform Work in accordance with SMACNA - HVAC Duct Construction Standards - Metal and flexible.

B. Construct ductwork to NFPA 90A standards and 2009 International Mechanical Code.

C. Maintain one copy of each document on site.

1.7 ENVIRONMENTAL REQUIREMENTS

A. Division 01 - Product Requirements.

B. Do not install duct sealant when temperatures are less than those recommended by sealant manufacturers.

C. Maintain temperatures during and after installation of duct sealant.

1.8 FIELD MEASUREMENTS

A. Verify field measurements prior to fabrication.

1.9 WARRANTY

A. Division 01 - Execution and Closeout Requirements: Product warranties and product bonds.

B. Furnish five year manufacturer warranty for ducts.

PART 2 PRODUCTS

2.1 Galvanized Steel Ducts: ASTM A653/A653M galvanized steel sheet, lock-forming quality, having G60 zinc coating of in conformance with ASTM A90/A90M.

A. Fasteners: Rivets, bolts, or sheet metal screws.

B. Hanger Rod: ASTM A36/A36M; steel, galvanized; threaded both ends, threaded one end, or continuously threaded.

2.2 INSULATED FLEXIBLE DUCTS

A. Product Description: UL 181, Class 0, interlocking spiral of aluminum foil; fiberglass insulation; polyethylene vapor barrier film.
   1. Pressure Rating: 8 inches wg positive or negative.
   2. Maximum Velocity: 5000 fpm.
   3. Temperature Range: -20 degrees F to 250 degrees F.
   4. Thermal Resistance: 4.2 square feet-hour-degree F per BTU.

2.3 SINGLE WALL SPIRAL ROUND DUCTS

A. Product Description: UL 181, Class 1, round spiral lockseam duct constructed of galvanized steel.Construct duct with the following minimum gages:

Diameter	Gauge
3 inches to 14 inches	26
15 inches to 26 inches	24
28 inches to 36 inches	22
38 inches to 50 inches	20
52 inches to 84 inches	18

B. Construct fittings with the following minimum gages:

Diameter	Gauge
3 inches to 14 inches	24
15 inches to 26 inches	22
28 inches to 36 inches	20
38 inches to 50 inches	20
52 inches to 60 inches	18
62 inches to 84 inches	16

2.4 DOUBLE WALL SPIRAL INSULATED ROUND DUCTS

A. Product Description: Machine made from round spiral lockseam duct with light reinforcing corrugations, galvanized steel outer wall, 2 inch thick glass fiber insulation, solid galvanized steel inner wall; fittings manufactured with solid inner wall.Construct round duct with the following minimum gages:

Diameter	Gauge
3 inches to 14 inches	26
15 inches to 26 inches	24
28 inches to 36 inches	22
38 inches to 50 inches	20
52 inches to 84 inches	18

B. Construct round fittings with the following minimum gages:

Diameter	Gauge
3 inches to 14 inches	24
15 inches to 26 inches	22
28 inches to 36 inches	20
38 inches to 50 inches	20

52 inches to 60 inches	18
62 inches to 84 inches	16

2.5 TRANSVERSE DUCT CONNECTION SYSTEM

A. Product Description: SMACNA "E" rated rigidity class connection, interlocking angle and duct edge connection system with sealant, gasket, cleats, and corner clips.

2.6 DUCTWORK FABRICATION

A. Fabricate and support rectangular ducts in accordance with SMACNA HVAC Duct Construction Standards - Metal and Flexible and as indicated on Drawings. Provide duct material, gages, reinforcing, and sealing for operating pressures indicated.

B. Fabricate and support round ducts with longitudinal seams in accordance with SMACNA HVAC Duct Construction Standards - Metal and Flexible (Round Duct Construction Standards), and as indicated on Drawings. Provide duct material, gages, reinforcing, and sealing for operating pressures indicated.

C. Construct T's, bends, and elbows with minimum radius 1-1/2 times centerline duct width. Where not possible and where rectangular elbows are used, provide airfoil turning vanes. Where acoustical lining is indicated, furnish turning vanes of perforated metal with glass fiber insulation.

D. Increase duct sizes gradually, not exceeding 15 degrees divergence wherever possible; maximum 30 degrees divergence upstream of equipment and 45 degrees convergence downstream.

E. Fabricate continuously welded round and oval duct fittings two gages heavier than duct gages indicated in SMACNA Standard. Minimum 4 inch cemented slip joint, brazed or electric welded. Prime coat welded joints.

F. Provide standard 45-degree lateral wye takeoffs. When space does not allow 45-degree lateral wye takeoff, use 90-degree conical tee connections.

G. Seal joints between duct sections and duct seams with welds, gaskets, mastic adhesives, mastic plus embedded fabric systems, or tape.
   1. Sealants, Mastics and Tapes: Conform to UL 181A. Provide products bearing appropriate UL 181A markings.
   2. Do not provide sealing products not bearing UL approval markings.

PART 3 EXECUTION

3.1 EXAMINATION

A. Division 01 - Administrative Requirements: Coordination and project conditions.

B. Verify sizes of equipment connections before fabricating transitions.

3.2 INSTALLATION

A. Install and seal ducts in accordance with SMACNA HVAC Duct Construction Standards - Metal and Flexible.

B. During construction, install temporary closures of metal or taped polyethylene on open ductwork to prevent construction dust from entering ductwork system.

C. Use crimp joints with or without bead or beaded sleeve couplings for joining round duct sizes 8 inch and smaller.

D. Install duct hangers and supports in accordance with Section 23 05 29.

E. Use double nuts and lock washers on threaded rod supports.

F. Connect flexible ducts to metal ducts with draw bands.

G. Set plenum doors 6 to 12 inches above floor. Arrange door swing so fan static pressure holds door in closed position.

H. For outdoor ductwork, protect ductwork, ductwork supports, linings and coverings from weather.

I. Exhaust Outlet Locations:
   1. Minimum Distance from Property Lines: 3 feet.
   2. Minimum Distance from Building Openings: 3 feet.
   3. Minimum Distance from Outside Air Intakes: 10 feet.

3.3 INTERFACE WITH OTHER PRODUCTS

A. Install openings in ductwork where required to accommodate thermometers and controllers. Install pitot tube openings for testing of systems. Install pitot tube complete with metal can with spring device or screw to prevent air leakage. Where openings are provided in insulated ductwork, install insulation material inside metal ring.

B. Connect diffusers boots to low pressure ducts directly or with 5 feet maximum length of flexible duct held in place with strap or clamp.

C. Connect air terminal units and air outlets and inlets to supply ducts directly or with five foot maximum length of flexible duct. Do not use flexible duct to change direction.

3.4 CLEANING

A. Division 01 - Execution and Closeout Requirements: Final cleaning.

B. Clean duct system and force air at high velocity through duct to remove accumulated dust. To obtain sufficient air flow, clean one half of system completely before proceeding to other half. Protect equipment with potential to be harmed by excessive dirt with temporary filters, or bypass during cleaning.

C. Clean duct systems with high power vacuum machines. Protect equipment with potential to be harmed by excessive dirt with filters, or bypass during cleaning. Install access openings into ductwork for cleaning purposes.

3.5 TESTING

A. All medium pressure ductwork (Air Handling unit to Terminal Units) shall be pressure tested after duct cleaning, but before duct insulation is applied or ductwork is concealed. 25 percent of all low pressure supply duct (From terminal units to diffusers), return duct, and exhaust duct shall be pressure tested after duct cleaning, but before duct insulation is applied or ductwork is concealed.
1. Test in accordance with SMACNA HVAC Air Duct Leakage Test Manual.
2. Maximum Allowable Leakage: In accordance with ICC IECC.

3.6 SCHEDULES

A. Ductwork Material Schedule:

AIR SYSTEM	MATERIAL
Supply (System with Cooling Coils)	Galvanized Steel
Return and Relief	Galvanized Steel
General Exhaust	Galvanized Steel
Outside Air Intake	Galvanized Steel

B. Ductwork Pressure Class Schedule:

AIR SYSTEM	PRESSURE CLASS
Constant Volume Supply	1 inch wg regardless of velocity.
Variable Air Volume Supply (downstream of VAV boxes)	1 inch wg regardless of velocity.
Variable Air Volume Supply (upstream of VAV boxes)	3 inch wg
Return and Relief	1/2 inch wg
General Exhaust	1/2 inch wg

END OF SECTION

SECTION 23 33 00 - AIR DUCT ACCESSORIES

PART 1 GENERAL

1.1 SUMMARY

A. Section Includes:
1. Back-draft dampers.
2. Combination fire-and-smoke dampers.
3. Duct access doors.
4. Dynamic fire dampers.
5. Volume control dampers.
6. Flexible duct connections.
7. Duct test holes.

B. Related Sections:
1. Section 23 09 23 - Direct-Digital Control System for HVAC: Execution and Product requirements for connection and control of Combination Smoke and Fire Dampers for placement by this section.
2. Section 23 31 00 - HVAC Ducts and Casings: Requirements for duct construction and pressure classifications.
3. Division 26 - Equipment Wiring Connections: Execution requirements for connection of electrical Combination Smoke and Fire Dampers specified by this section.

1.2 REFERENCES

A. Air Movement and Control Association International, Inc.:
1. AMCA 500 - Test Methods for Louvers, Dampers, and Shutters.

B. ASTM International:
1. ASTM E1 - Standard Specification for ASTM Thermometers.

C. National Fire Protection Association:
1. NFPA 90A - Standard for the Installation of Air Conditioning and Ventilating Systems.
2. NFPA 92A - Recommended Practice for Smoke-Control Systems.

D. Sheet Metal and Air Conditioning Contractors:
1. SMACNA - HVAC Duct Construction Standard - Metal and Flexible.

E. Underwriters Laboratories Inc.:
1. UL 555 - Standard for Safety for Fire Dampers.
2. UL 555C - Standard for Safety for Ceiling Dampers.
3. UL 555S - Standard for Safety for Smoke Dampers.

1.3 SUBMITTALS

A. Division 01 - Submittal Procedures: Submittal procedures.

B. Shop Drawings: Indicate for shop fabricated assemblies including volume control dampers, duct access doors, and duct test holes.

C. Product Data: Submit data for shop fabricated assemblies and hardware used.

D. Product Data: Submit for the following. Include where applicable electrical characteristics and connection requirements.
1. Fire dampers including locations and ratings.
2. Smoke dampers including locations and ratings.
3. Backdraft dampers.
4. Flexible duct connections.
5. Volume control dampers.
6. Duct access doors.
7. Duct test holes.

E. Product Data: For fire dampers and combination fire and smoke dampers submit the following:
1. Include UL ratings, dynamic ratings, leakage, pressure drop and maximum pressure data.
2. Indicate materials, construction, dimensions, and installation details.
3. Damper pressure drop ratings based on tests and procedures performed in accordance with AMCA 500.

F. Manufacturer's Installation Instructions: Submit for Fire and Combination Smoke and Fire Dampers.

G. Manufacturer's Certificate: Certify products meet or exceed specified requirements.

1.4 CLOSEOUT SUBMITTALS

A. Division 01 - Execution and Closeout Requirements: Closeout procedures.

B. Project Record Documents: Record actual locations of access doors and test holes.

C. Operation and Maintenance Data: Submit for Combination Smoke and Fire Dampers.

1.5 QUALITY ASSURANCE

A. Dampers tested, rated and labeled in accordance with the latest UL requirements.

B. Damper pressure drop ratings based on tests and procedures performed in accordance with AMCA 500.

1.6 DELIVERY, STORAGE, AND HANDLING

A. Division 01 - Product Requirements: Product storage and handling requirements.

B. Protect dampers from damage to operating linkages and blades.

C. Delivery: Deliver materials to site in manufacturer's original, unopened containers and packaging, with labels clearly indicating manufacturer and material.

D. Storage: Store materials in a dry area indoor, protected from damage.

E. Handling: Handle and lift dampers in accordance with manufacturer's instructions. Protect materials and finishes during handling and installation to prevent damage.

1.7 FIELD MEASUREMENTS

A. Verify field measurements prior to fabrication.

1.8 COORDINATION

A. Division 01 - Administrative Requirements: Coordination and project conditions.

B. Coordinate Work where appropriate with building control Work.

1.9 WARRANTY

A. Division 01 - Execution and Closeout Requirements: Product warranties and product bonds.

B. Furnish five year manufacturer warranty for duct accessories.

1.10 EXTRA MATERIALS

A. Division 01 - Execution and Closeout Requirements: Spare parts and maintenance products.

B. Furnish two of each size and type of fusible link.

PART 2 PRODUCTS

2.1 BACK-DRAFT DAMPERS

A. Product Description: Multi-Blade, back-draft dampers: Parallel-action, gravity-balanced, Galvanized 16 gage thick steel, or extruded aluminum. Blades, maximum 6 inch width, center pivoted, with felt or flexible vinyl sealed edges. Blades linked together in rattle-free manner with 90-degree stop, steel ball bearings, and plated steel pivot pin. Furnish dampers with adjustment device to permit setting for varying differential static pressure.

2.2 COMBINATION FIRE AND SMOKE DAMPERS: Fabricate in accordance with NFPA 90A, UL 555, and UL 555S.

A. Fire Resistance: 1-1/2 hours.

B. Leakage Rating: Class I, maximum of 8 cfm at 4 inches wg differential pressure.

C. Damper Temperature Rating: 250 degrees F.

D. Frame: 16 gage, galvanized steel.

E. Blades:

1. Style: Airfoil-shaped, single piece, double skin.
2. Action: Opposed.
3. Orientation: Horizontal.
4. Material: Minimum 16 gage equivalent thickness, galvanized steel.
5. Width: Maximum 6 inches.

F. Bearings: Stainless steel pressed into frame.

G. Seals: Silicone blade edge seals and flexible stainless steel jamb seals.

H. Linkage: Concealed in frame.

I. Release Device: Close in controlled manner and lock damper through actuator closure spring.

J. Actuator:
1. Type: Electric 120 volt, 60 hertz, two-position, fail close.
2. Mounting: External.

K. Fusible Link Release Temperature: 165 degrees F.

L. Finish: Mill galvanized.

M. Factory installed sleeve and [mounting angles]. Furnish silicone caulk factory applied to sleeve at damper frame to comply with leakage rating requirements.

2.3 DUCT ACCESS DOORS: Fabricate in accordance with SMACNA HVAC Duct Construction Standards - Metal and Flexible, and as indicated on Drawings.

A. Fabrication: Rigid and close fitting of galvanized steel with sealing gaskets and quick fastening locking devices. For insulated ductwork, furnish minimum 1 inch thick insulation with sheet metal cover.
1. Less than 12 inches square, secure with sash locks.
2. Up to 18 inches Square: Furnish two hinges and two sash locks.
3. Up to 24 x 48 inches: Three hinges and two compression latches with outside and inside handles.
4. Larger Sizes: Furnish additional hinge.
5. Sash Lock.
6. Compression Latch.
7. Hinge.
8. Access panels with sheet metal screw fasteners are not acceptable.

2.4 DYNAMIC FIRE DAMPERS: Fabricate in accordance with NFPA 90A and UL 555.

A. Fire Resistance: 1-1/2 hours.

B. Dynamic Closure Rating: Dampers classified for dynamic closure to 2000 fpm and 4 inches wg static pressure.

C. Construction:

1. Integral Sleeve Frame: Minimum 20 gage roll formed galvanized steel. Length: 12 inches.
2. Blades:
   a. Style: Curtain type.
   b. Action: Spring or gravity closure upon fusible link release.
   c. Material: Minimum 24 gage roll formed, galvanized steel.
3. Closure Springs: Type 301 stainless steel, constant force type, if required.

D. Fusible Link Release Temperature: 165 degrees F.

E. Mounting: as indicated on Drawings.

F. Duct Transition Connection, Damper Style:
1. B style - rectangular connection, blades out of air stream, high free area.
2. CR style - round connection, sealed.
3. LR style - round connection, blades out of air stream, non-sealed.

G. Finish: Mill galvanized.

2.5 VOLUME CONTROL DAMPERS: Fabricate in accordance with SMACNA HVAC Duct Construction Standards - Metal and Flexible, and as indicated on Drawings.

A. Splitter Dampers:
1. Material: Same gage as duct to 24 inches size in both dimensions, and two gages heavier for sizes over 24 inches.
2. Blade: Fabricate of single thickness sheet metal to streamline shape, secured with continuous hinge or rod.
3. Operator: Minimum 1/4 inch diameter rod in self aligning, universal joint action, flanged bushing with set screw.
4. Single Blade Dampers: Fabricate for duct sizes up to 6 x 30 inch.

B. Multi-Blade Damper: Fabricate of opposed blade pattern with maximum blade sizes 8 x 72 inch. Assemble center and edge crimped blades in prime coated or galvanized frame channel with suitable hardware.

C. End Bearings: Except in round ductwork 12 inches and smaller, furnish end bearings. On multiple blade dampers, furnish oil-impregnated nylon or sintered bronze bearings. Furnish closed end bearings on ducts having pressure classification over 2 inches wg.

D. Quadrants:
1. Furnish locking, indicating quadrant regulators on single and multi-blade dampers.
2. On insulated ducts mount quadrant regulators on standoff mounting brackets, bases, or adapters.
3. Where rod lengths exceed 30 inches furnish regulator at both ends.

2.6 FLEXIBLE DUCT CONNECTIONS: Fabricate in accordance with SMACNA HVAC Duct Construction Standards - Metal and Flexible, and as indicated on Drawings.

A. Connector: Fabric crimped into metal edging strip.

1. Fabric: UL listed fire-retardant neoprene coated woven glass fiber fabric conforming to NFPA 90A, minimum density 30 oz per sq yd.
2. Net Fabric Width: Approximately 6 inches wide.
3. Metal: 3 inch wide, 24 gage galvanized steel

B. Leaded Vinyl Sheet: Minimum 0.55 inch thick, 0.87 lbs. per sq ft, 10 dB attenuation in 10 to 10,000 Hz range.

2.7 DUCT TEST HOLES: Permanent Test Holes: Factory fabricated, air tight flanged fittings with screw cap. Furnish extended neck fittings to clear insulation.

PART 3 EXECUTION

3.1 EXAMINATION

A. Division 01 - Administrative Requirements: Coordination and project conditions.

B. Verify rated walls are ready for fire damper installation.

C. Verify ducts and equipment installation are ready for accessories.

D. Check location of air outlets and inlets and make necessary adjustments in position to conform to architectural features, symmetry, and lighting arrangement.

3.2 INSTALLATION.

A. Install in accordance with NFPA 90A, 2009 International Mechanical Code, and follow SMACNA HVAC Duct Construction Standards - Metal and Flexible. Refer to Section 23 31 00 for duct construction and pressure class.

B. Install back-draft dampers on exhaust fans or exhaust ducts nearest to outside and where indicated on Drawings.

C. Access Doors: Install access doors at the following locations and as indicated on Drawings:
1. Spaced every 50 feet of straight duct.
2. Upstream of each elbow.
3. Upstream of each reheat coil.
4. Before and after each duct mounted fan.
5. Before and after each automatic control damper.
6. Before and after each fire damper and combination fire and smoke damper.
7. Downstream of each VAV box.

D. Access Door Sizes: Install minimum 8 x 8 inch size for hand access, 18 x 18 inch size for shoulder access, and as indicated on Drawings. Install 4 x 4 inch for balancing dampers only. Review locations prior to fabrication.
1. Mark access doors for fire and smoke dampers on outside surface, with minimum 1/2 inch high letters reading: FIRE/SMOKE DAMPER, SMOKE DAMPER, OR FIRE DAMPER.

E. Install temporary duct test holes as required for testing and balancing purposes. Cut or drill in ducts. Cap with neat patches, neoprene plugs, threaded plugs, or threaded or twist-on metal caps.

F. Install fire dampers and combination fire and smoke dampers at locations as indicated on Drawings. Install with required perimeter mounting angles, sleeves, breakaway duct connections, corrosion resistant springs, bearings, bushings and hinges.
   1. Install dampers square and free from racking with blades running horizontally.
   2. Do not compress or stretch damper frame into duct or opening.
   3. Handle damper using sleeve or frame. Do not lift damper using blades, actuator, or jack shaft.
   4. Install bracing for multiple section assemblies to support assembly weight and to hold against system pressure. Install bracing as needed.

3.3 DEMONSTRATION

A. Division 01 - Execution and Closeout Requirements: Requirements for demonstration and training.

B. Demonstrate re-setting of fire dampers to Owner's representative.

END OF SECTION

SECTION 23 34 00 - HVAC FANS

PART 1 GENERAL

1.1 SUMMARY

A. Section Includes:
1. Upblast centrifugal roof fans.

B. Related Sections:
1. Section 23 05 13 - Common Motor Requirements for HVAC Equipment: Product requirements for motors for placement by this section.
2. Section 23 05 48 - Vibration and Seismic Controls for HVAC Piping and Equipment: Product requirements for resilient mountings and snubbers for fans for placement by this section.
3. Section 23 07 00 - HVAC Insulation: Product requirements for power ventilators for placement by this section.
4. Section 23 09 00 - Instrumentation and Control for HVAC: Product requirements for control components to interface with fans.
5. Section 23 31 00 - HVAC Ducts and Casings: Product requirements for hangers for placement by this section.
6. Section 23 33 00 - Air Duct Accessories: Product requirements for duct accessories for placement by this section.
7. Section 26 05 03 - Equipment Wiring Connections: Execution and product requirements for connecting equipment specified by this section.

1.2 REFERENCES

A. American Bearing Manufacturers Association:
1. ABMA 9 - Load Ratings and Fatigue Life for Ball Bearings.
2. ABMA 11 - Load Ratings and Fatigue Life for Roller Bearings.

B. Air Movement and Control Association International, Inc.:
1. AMCA 99 - Standards Handbook.
2. AMCA 204 - Balance Quality and Vibration Levels for Fans.
3. AMCA 210 - Laboratory Methods of Testing Fans for Aerodynamic Performance Rating.
4. AMCA 300 - Reverberant Room Method for Sound Testing of Fans.
5. AMCA 301 - Methods for Calculating Fan Sound Ratings from Laboratory Test Data.

C. American Refrigeration Institute:
1. ARI 1060 - Air-to-Air Energy Recovery Ventilation Equipment Certification Equipment Program.

D. ASTM International:
1. ASTM E1996 - Standard Specification for Performance of Exterior Windows, Curtain Walls, Doors and Impact Protective Systems Impacted by Windborne Debris in Hurricanes.

E. National Electrical Manufacturers Association:
   1. NEMA MG 1 - Motors and Generators.
   2. NEMA 250 - Enclosures for Electrical Equipment (1000 Volts Maximum).

F. Underwriters Laboratories Inc.:
   1. UL 705 - Power Ventilators.

1.3 SUBMITTALS

A. Section 01 33 00 - Submittal Procedures: Submittal procedures.

B. Shop Drawings: Indicate size and configuration of fan assembly, mountings, weights, ductwork and accessory connections.

C. Product Data: Submit data on each type of fan and include accessories, fan curves with specified operating point plotted, power, RPM, sound power levels for both fan inlet and outlet at rated capacity, electrical characteristics and connection requirements.

D. Manufacturer's Installation Instructions: Submit fan manufacturers instructions.

E. Manufacturer's Certificate: Certify products meet or exceed specified requirements.

1.4 CLOSEOUT SUBMITTALS

A. Section 01 70 00 - Execution and Closeout Requirements: Closeout procedures.

B. Operation and Maintenance Data: Submit instructions for lubrication, motor and drive replacement, spare parts list, and wiring diagrams.

1.5 QUALITY ASSURANCE

A. Performance Ratings: Conform to AMCA 210 and bear AMCA Certified Rating Seal.

B. Sound Ratings: AMCA 301, tested to AMCA 300, and bear AMCA Certified Sound Rating Seal.

C. UL Compliance: UL listed and labeled, designed, manufactured, and tested in accordance with UL 705.

D. Balance Quality: Conform to AMCA 204.

1.6 DELIVERY, STORAGE, AND HANDLING

A. Section 01 60 00 - Product Requirements: Product storage and handling requirements.

B. Protect motors, shafts, and bearings from weather and construction dust.

1.7 FIELD MEASUREMENTS

A. Verify field measurements prior to fabrication.

1.8 WARRANTY

A. Section 01 70 00 - Execution and Closeout Requirements: Product warranties and product bonds.

B. Furnish five year manufacturer’s warranty for fans.

1.9 MAINTENANCE SERVICE

A. Section 01 70 00 - Execution and Closeout Requirements: Requirements for maintenance service.

B. Furnish service and maintenance of fans for the duration of the construction of the project.

C. Examine each fan components monthly. Clean, adjust, and lubricate equipment.

D. Include systematic examination, adjustment, and lubrication of fans, and controls checkout and adjustments. Repair or replace parts in accordance with manufacturer's operating and maintenance data. Use parts produced by manufacturer of original equipment.

E. Perform work without removing fans from service during building normal occupied hours.

F. Provide emergency call back service [at all hours] [during working hours] for this maintenance period.

G. Maintain locally, near Place of the Work, adequate stock of parts for replacement or emergency purposes. Have personnel available to ensure fulfillment of this maintenance service, without unreasonable loss of time.

H. Perform maintenance work using competent and qualified personnel under supervision and in direct employ of manufacturer or original installer.

I. Do not assign or transfer maintenance service to agent or subcontractor without prior written consent of Owner.

1.10 EXTRA MATERIALS

A. Section 01 70 00 - Execution and Closeout Requirements: Spare parts and maintenance products.

B. Furnish two sets of belts for each fan.

PART 2 PRODUCTS

2.1 UPBLAST CENTRIFUGAL ROOF FANS

A. Manufacturers:
1. Acme Engineering and Manufacturing Corp.

2. Greenheck Corp.
3. Loren Cook Company
4. Penn Ventilation
5. Substitutions: Not permitted.

B. Fan Unit: Upblast type. V-belt drive, spun aluminum housing with grease tray; resilient mounted motor; aluminum wire bird screen; square base to suit roof curb with continuous curb gaskets.

C. Sheaves: Cast iron or steel, dynamically balanced, bored to fit shafts and keyed; variable and adjustable pitch motor sheave selected so required rpm is obtained with sheaves set at mid-position; fan shaft with self-aligning pre-lubricated ball bearings.

D. Motor: Totally enclosed fan cooled.

E. Roof Curb Roof Curb: 18 inch high self-flashing of galvanized steel construction with continuously welded seams, 1 inch insulation and curb bottom, hinged curb adapter, and factory installed nailer strip.

F. Disconnect Switch: Factory wired, non-fusible, in housing for thermal overload protected motor NEMA 250 Type 3R enclosure.

G. Accessories:
1. Backdraft Damper: Gravity actuated, aluminum multiple blade construction, felt edged with offset hinge pin, nylon bearings, blades linked .

2.2 GRAVITY ROOF VENTILATORS

A. Manufacturers:
1. Acme Engineering and Manufacturing Corp.
2. Greenheck Corp.
3. Loren Cook Company
4. Penn Ventilation
5. Substitutions: Not permitted.

B. Product Description: Galvanized steel with baked-on enamel housing; aluminum wire bird screen; square base to suit roof curb with continuous curb gaskets.

C. Roof Curb: 18 inch high self-flashing of galvanized steel construction with continuously welded seams, 1 inch insulation and curb bottom, hinged curb adapter, and factory installed nailer strip.

D. Backdraft Damper: Gravity actuated, aluminum multiple blade construction, felt edged with offset hinge pin, nylon bearings, blades linked.

PART 3 EXECUTION

3.1 EXAMINATION

A. Section 01 30 00 - Administrative Requirements: Coordination and project conditions.

B. Verify roof curbs are installed and dimensions are as shown on shop drawings and as instructed by manufacturer.

3.2 PREPARATION

A. Furnish roof curbs to Roofing Contractor for installation.

3.3 INSTALLATION

A. Secure fans and gravity ventilators with stainless steel lag screws to roof curb.

B. Install backdraft dampers on inlet to exhaust fans and gravity ventilators used in relief air applications.

C. Install safety screen where inlet or outlet is exposed.

D. Install backdraft dampers on discharge of exhaust fans and as indicated on Drawings.

E. Provide sheaves required for final air balance.

3.4 MANUFACTURER'S FIELD SERVICES

A. Division 01 - Quality Requirements: Requirements for manufacturer’s field services.

B. Furnish services of factory trained representative for minimum of one days to start-up, calibrate controls, and instruct Owner on operation and maintenance.

3.5 CLEANING

A. Division 01 - Execution and Closeout Requirements: Requirements for cleaning.

B. Vacuum clean inside of fan cabinet.

3.6 DEMONSTRATION

A. Division 01 - Execution and Closeout Requirements: Requirements for demonstration and training.

B. Demonstrate fan operation and maintenance procedures.

3.7 PROTECTION OF FINISHED WORK

A. Division 01 - Execution and Closeout Requirements: Requirements for protecting finished Work.

B. Do not operate fans for until ductwork is clean, filters in place, bearings lubricated, and fan has been test run under observation.

END OF SECTION

SECTION 23 37 00 - AIR OUTLETS AND INLETS

PART 1 GENERAL

1.1 SUMMARY

A. Section Includes:
1. Diffusers.
2. Registers
3. Grilles.
4. Door grilles.
5. Roof hoods.
6. Goosenecks.

B. Related Sections:
1. Section 09 90 00 - Painting and Coating: Execution and product requirements for Painting of ductwork visible behind outlets and inlets specified by this section.
2. Section 23 33 00 - Air Duct Accessories: Volume dampers for inlets and outlets.

1.2 REFERENCES

A. Air Movement and Control Association International, Inc.:
1. AMCA 500 - Test Methods for Louvers, Dampers, and Shutters.

B. American Society of Heating, Refrigerating and Air-Conditioning Engineers:
1. ASHRAE 70 - Method of Testing for Rating the Performance of Air Outlets and Inlets.

C. Sheet Metal and Air Conditioning Contractors:
1. SMACNA - HVAC Duct Construction Standard - Metal and Flexible.

1.3 SUBMITTALS

A. Division 01 - Submittal Procedures: Submittal procedures.

B. Product Data: Submit sizes, finish, and type of mounting. Submit schedule of outlets and inlets showing type, size, location, application, and noise level.

C. Test Reports: Rating of air outlet and inlet performance.

D. Manufacturer's Certificate: Certify products meet or exceed specified requirements.

1.4 CLOSEOUT SUBMITTALS

A. Division 01 - Execution and Closeout Requirements: Closeout procedures.

B. Project Record Documents: Record actual locations of air outlets and inlets.

1.5 QUALITY ASSURANCE

A. Test and rate diffuser, register, and grille performance in accordance with ASHRAE 70.

B. Test and rate louver performance in accordance with AMCA 500.

1.6 WARRANTY

A. Division 01 - Execution and Closeout Requirements: Product warranties and product bonds.

B. Furnish five year manufacturer warranty for air outlets and inlets.

1.7 EXTRA MATERIALS

A. Division 01 - Execution and Closeout Requirements: Spare parts and maintenance products.

PART 2 PRODUCTS

2.1 RECTANGULAR CEILING DIFFUSERS

A. Manufacturers:
1. E. H Price Company.
2. Krueger.
3. Nailor Industries, Inc..
4. Titus.
5. Tuttle and Bailey.
6. Substitutions: Not permitted.

B. Type: Square, adjustable pattern, stamped, multi-core, multi-louvered diffuser to discharge air as shown on drawings.

C. Frame: Surface mount and Snap-in as shown on drawings.

D. Fabrication: Steel with baked enamel off-white finish.

2.2 CEILING SUPPLY REGISTERS/GRILLES

A. Manufacturers:
1. E. H Price Company.
2. Krueger.
3. Nailor Industries, Inc..
4. Titus.
5. Tuttle and Bailey.
6. Substitutions: Not permitted.

B. Type: Streamlined and individually adjustable curved blades to discharge air along face of grille, one-way or two two-way deflection.

C. Frame: 1 inch margin with countersunk screw mounting and gasket.

D. Fabrication: Aluminum extrusions with factory off-white enamel finish.

E. Damper: Integral, gang-operated, opposed-blade type with removable key operator, operable from face.

2.3 CEILING EXHAUST AND RETURN REGISTERS/GRILLES

A. Manufacturers:
1. E. H Price Company.
2. Krueger.
3. Nailor Industries, Inc..
4. Titus.
5. Tuttle and Bailey.
6. Substitutions: Not permitted.

B. Type: Streamlined blades, 3/4 inch minimum depth, 3/4 inch maximum spacing, with blades set at 45 degrees.

C. Frame: 1 inch margin with countersunk screw.

D. Fabrication: Steel with 20 gage minimum frames and 22 gage minimum blades, steel and aluminum with 20 gage minimum frame, or aluminum extrusions, with factory off-white enamel finish.

E. Damper: Integral, gang-operated, opposed blade type with removable key operator, operable from face where not individually connected to exhaust fans.

2.4 CEILING GRID CORE EXHAUST AND RETURN REGISTERS/GRILLES

A. Manufacturers:
1. E. H Price Company.
2. Krueger.
3. Nailor Industries, Inc..
4. Titus.
5. Tuttle and Bailey.
6. Substitutions: Not permitted.

B. Type: Fixed grilles of 1 x 1 x 1 inch louvers.

C. Fabrication: Aluminum with factory off-white enamel finish.

D. Frame: 1 inch margin with countersunk screw mounting.Channel lay-in frame for suspended grid ceilings.

2.5 WALL GRID CORE EXHAUST AND RETURN REGISTERS/GRILLES

A. Manufacturers:
1. E. H Price Company.
2. Krueger.
3. Nailor Industries, Inc..
4. Titus.
5. Tuttle and Bailey
6. Substitutions: Not permitted.

B. Type: Fixed grilles of 1 x 1 x 1 inch louvers.

C. Frame: 1 inch margin with countersunk screw mounting. Lay-in frame for suspended grid ceilings.

D. Fabrication: Aluminum with factory off-white enamel finish.

2.6 DOOR GRILLES

A. Manufacturers:
1. E. H Price Company.
2. Krueger.
3. Nailor Industries, Inc..
4. Titus.
5. Tuttle and Bailey.
6. Substitutions: Not permitted.

B. Type: V-shaped louvers of 20 gage thick steel, 1 inch deep on 1/2 inch centers.

C. Frame: 20 gage steel with auxiliary frame to give finished appearance on both sides of door, with factory prime coat finish.

2.7 LOUVERS

A. Manufacturers:
1. Arrow United Industries.
2. Construction Specialties Inc.
3. Greenheck Corp.
4. Industrial Louvers Inc.
5. Nailor Industries, Inc.
6. Ruskin Manufacturing
7. Substitutions: Not permitted.

B. Product Description: Stationary Drainable.

C. Type: 4 inch deep with blades on 45 degree slope, heavy channel frame.

D. Fabrication: 16 gage thick galvanized steel, welded assembly, with factory prime coat finish color to be selected.

E. Mounting: Furnish with exterior flat flange for installation.

F. Bird Screen: Bird screen with 1/2 inch square mesh for exhaust and 3/4 inch for intake.

G. Insect Screen: Aluminum mesh, set in frame.

2.8 ROOF HOODS

A. Manufacturers:
1. Acme
2. Cook
3. Greenheck

4. Substitutions: Prior Approval required.

B. Fabricate air inlet or exhaust hoods in accordance with SMACNA HVAC Duct Construction Standards - Metal and Flexible.

C. Fabricate of reinforced galvanized steel, minimum 16 gage base and 20 gage hood, or aluminum, minimum 16 gage base and 18 gage hood. Furnish removable hood; bird screen with 1/2 inch square mesh.

D. Fabricate hood outlet area minimum of twice throat area.

E. Roof Curb: 18 inch high self-flashing, galvanized steel or aluminum to match hood construction with continuously welded seams, built-in cant strips, and factory installed nailer strip.

2.9 GOOSENECKS

A. Fabricate in accordance with SMACNA HVAC Duct Construction Standards - Metal and Flexible, of minimum 18 gage galvanized steel.

B. Roof Curb: 18 inch high galvanized steel construction with continuously welded seams, built-in cant strips, and factory installed nailer strip.

PART 3 EXECUTION

3.1 EXAMINATION

A. Division 01 - Administrative Requirements: Coordination and project conditions.

B. Verify inlet and outlet locations.

C. Verify ceiling and wall systems are ready for installation.

3.2 INSTALLATION

A. Install diffusers to ductwork with airtight connection.

B. Install balancing dampers on duct take-off to diffusers, grilles, and registers, whether or not dampers are furnished as part of diffuser, grille, and register assembly. Refer to Section 23 33 00.

C. Paint visible portion of ductwork behind air outlets and inlets matte black. Refer to Division 09.

D. Do not locate air registers, diffusers or grilles in floors of toilet or bathing rooms.

E. Install Roof Hoods in strict accordance with manufacturer’s recommendations.

3.3 INTERFACE WITH OTHER PRODUCTS

A. Check location of outlets and inlets and make necessary adjustments in position to conform to architectural features, symmetry, and lighting arrangement.

END OF SECTION

SECTION 23 40 00 - HVAC AIR CLEANING DEVICES

PART 1 GENERAL

1.1 SUMMARY

A. Section Includes:
1. Disposable, extended area panel filters.
2. Extended surface high efficiency media filters.

B. Related Sections:
1. Section 23 05 13 - Common Motor Requirements for HVAC Equipment: Product requirements for motors for placement by this section.
2. Section 26 05 03 - Equipment Wiring Connections: Execution requirements for wiring products for placement by this section.

1.2 REFERENCES

A. Air-Conditioning and Refrigeration Institute:
1. ARI 850 - Commercial and Industrial Air Filter Equipment.

B. American Society of Heating, Refrigerating and Air-Conditioning Engineers:
1. ASHRAE 52.2 - 2007

C. Underwriters Laboratories Inc.:
1. UL 586 - High-Efficiency. Particulate, Air Filter Units.

1.3 PERFORMANCE REQUIREMENTS

A. Conform to ARI 850 Section 7.4.

1.4 SUBMITTALS

A. Division 01 - Submittal Procedures: Submittal procedures.

B. Product Data: Submit data on filter media, filter performance data, and dimensions.

1.5 CLOSEOUT SUBMITTALS

A. Division 01 - Execution and Closeout Requirements: Closeout procedures.

B. Operation and Maintenance Data: Submit instructions for operation, changing, and periodic cleaning.

1.6 QUALIFICATIONS

A. Manufacturer: Company specializing in manufacturing products specified in this section with minimum three years documented experience.

1.7 EXTRA MATERIALS

A. Division 01 - Execution and Closeout Requirements: Spare parts and maintenance products.

B. Furnish and install new filters (pre-filters-MERV 8 and Final Filters-MERV-13) before final acceptance.

PART 2 PRODUCTS

2.1 DISPOSABLE, EXTENDED AREA PANEL FILTERS

A. Media: pleated, lofted, non-woven, reinforced cotton and synthetic fabric; supported.
   1. Frame: Cardboard.
   2. Nominal thickness: 2 inches.

B. Rating, ASHRAE 52.2: MERV 8

2.2 EXTENDED SURFACE HIGH EFFICIENCY MEDIA FILTERS

A. Media: Pleated, water-resistant glass fiber with aluminum; in 16 gage steel holding frame with corrosion resistant coating.
   1. Nominal depth: 4” deep.

B. Performance Rating, ASHRAE 52.2: MERV 13.
   1. Recommended Final Resistance: 1.5 inch wg.

2.3 FILTER GAGES

A. Direct Reading Dial: 3-1/2 inch diameter diaphragm actuated dial in metal case. Furnish vent valves, black figures on white background, front calibration adjustment, range 0-3.0 inch wg, 2 percent of full scale accuracy.

B. Accessories: Static pressure tips with integral compression fittings, 1/4 inch aluminum tubing, 2-way or 3-way vent valves.

PART 3 EXECUTION

3.1 INSTALLATION

A. Install filters with felt, rubber, or neoprene gaskets to prevent passage of unfiltered air around filters.

B. Install filter gage static pressure tips upstream and downstream of filters. Mount filter gages on outside of filter housing or filter plenum, in accessible position. Adjust and level.

C. Do not operate fan system until temporary filters are in place. Replace temporary filters used during construction and testing, with clean set.

D. Install filter gages on filter banks with separate static pressure tips upstream and downstream of filters.

END OF SECTION

SECTION 23 74 00 – PACKAGED MAKE-UP AIR UNIT WITH HOT WATER HEATING COIL

1. GENERAL

1.1 SUMMARY

A. This section includes units with integral Hot water heating coil for rooftop installation. Airflow arrangement shall be Outdoor Air with Constant Volume. Each unit shall be constructed in a horizontal configuration and shall incorporate additional product requirements as listed in Section 2 of this specification.

B. Related divisions include the following:

1. Division 23: HVAC
2. Division 26: Electrical

1.2 SUBMITTALS

A. Product Data: For each type or model include the following:

1. Complete fan performance curves for Supply Air, with system operating conditions indicated, as tested on an AMCA Certified Chamber.
2. Sound performance data for Supply Air, as tested on an AMCA Certified chamber.
3. Motor ratings, electrical characteristics and motor and fan accessories.
4. Performance ratings for evaporative cooling media.
5. Dimensioned drawings for each type of installation, showing isometric and plan views, to include location of attached ductwork and service clearance requirements.
6. Estimated gross weight of each installed unit.
7. Installation, Operating and Maintenance manual (IOM) for each model.
8. Microprocessor Controller (DDC) specifications to include available options and operating protocols. Include complete data on all factory-supplied input devices.
9. Remote Panel description to include all functions.

1.3 QUALITY ASSURANCE

A. Source Limitations: Obtain unit with Integral Heating and Cooling with all appurtenant components or accessories from a single manufacturer.

B. Product Options: Drawings must indicate size, profiles and dimensional requirements of unit and are to be based on the specific system indicated. Refer to Division 1 Section “Product Requirements.”

C. Certifications

1. Entire unit shall be ETL Certified per ANSI Z83.4 or ANSI Z83.18 and bear an ETL mark.

1.4 COORDINATION

A. Coordinate size and location of all building penetrations required for installation of each Make Up Air Unit and associated ducting, plumbing and electrical systems.

B. Coordinate sequencing of construction of associated plumbing, HVAC and electrical supply.

2. PRODUCTS

1.1 MANUFACTURERS

A. Available Manufacturers: Subject to compliance with specifications contained within this document, manufacturers offering products that may be incorporated into the work include, but are not limited to:
   1. Greenheck.
   2. Loren Cook Company.
   3. Substitutions: Not permitted unless prior approved.

2.2 MANUFACTURED UNITS

A. Unit with Integral Heating shall be fully assembled at the factory and consist of an insulated metal cabinet, outdoor air intake weatherhood with aluminum mesh filter, motorized intake damper, sensors, curb assembly, filter assembly for intake air, supply air blower assembly and an electrical control center. All specified components and internal accessories factory installed and tested and prepared for single-point voltage connection.

2.3 CABINET

A. Materials: Formed, double wall insulated metal cabinet, fabricated to permit access to internal components for maintenance. Underside of unit shall have formed metal panels covering base panel insulation.
   1. Outside casing: 18 gauge, galvanized (G90) steel meeting ASTM A653 for components that do not receive a painted finish.
   2. Internal assemblies: 24 gauge, galvanized (G90) steel except for motor supports which shall be minimum14 gauge galvanized (G90) steel.
B. Cabinet Insulation: Comply with NFPA 90A and NFPA 90B and erosion requirements of UL 181.
   1. Materials: Fiberglass insulation. If insulation other than fiberglass is used, it must also meet the Fire Hazard Classification shown below.
      a. Thickness: 1 inch (25 mm)
      b. Fire Hazard Classification: Maximum flame spread of 25 and smoke developed of 50, when tested in accordance with ASTM C 411.
      c. Location and application: Floor of each unit shall be insulated with 1 inch thick rigid fiberglass insulation, covered on one surface with integral aluminum foil. Full interior coverage of entire cabinet to include walls and roof of unit shall be semi-rigid type and installed between inner and outer shells of all cabinet exterior components.
C. Access panels: Unit shall be equipped with insulated, hinged access panels to provide easy access to all major components. Access panels shall be fabricated of 18 gauge galvanized G90 steel. Removable access panels shall incorporate a formed drip edge.
D. Supply Air blower assembly: Blower assembly consists of an electric motor and a belt driven, double width, and double inlet forward curve blower. Assembly shall be mounted on heavy gauge galvanized rails and further mounted on spring isolation devices.
E. Control panel / connections: unit shall have an electrical control center where all high and low voltage connections are made. Control center shall be constructed to permit single-point high voltage power supply connections.
F. Heating Coil: Coils shall be provided to meet the scheduled performance. All coil performance shall be certified in accordance with AHRI Standard 410. All coils shall be tested at 450 psig air pressure.

1. General Fabrication:
   a. All water coils shall have minimum 1/2-in. OD copper tubes mechanically expanded into fins to ensure high thermal performance with lower total flow and pumping requirements. Minimum tube wall thickness shall be 0.016 inches.
   b. Aluminum plate fin type with belled collars.
   c. Aluminum-finned coils shall be supplied with die-formed casing and tube sheets of mill galvanized steel or stainless steel as specified. Copper- finned coils shall be supplied with stainless steel casing and tube sheets.
2. Hydronic Heating Coils:
   a. Headers shall be constructed of steel with steel MPT connections. Headers shall have drain and vent connections accessible from the exterior of the unit.
   b. Configuration: Coils shall be drainable, with non-trapping circuits. Coils will be suitable for a design working pressure of 300 psig at 200 F.

G. Motorized dampers / Intake Air: Motorized damper of low leakage type shall be factory installed.

H. Sensors are considered to be part of various optional operational modes or device controllers and are to be factory supplied and installed as specified in controls.

I. Curb Assembly: A curb 14" high assembly made of 14 gauge galvanized steel shall be provided by the factory for assembly and installation as part of this division. The curb assembly shall provide perimeter support of the entire unit and shall have duct adapter(s) for supply air and exhaust air. Curb assembly shall enclose the underside of the unit and shall be sized to fit into a recess in the bottom of the unit. Contractor shall be responsible for coordinating with roofing contractor to ensure curb unit is properly flashed to provide protection against weather/moisture penetration. Contractor shall provide and install appropriate insulation for the curb assembly.

2.4 BLOWER

A. Blower section construction, Supply Air: Belt drive motor and blower shall be assembled onto a minimum 14 gauge galvanized steel platform and must have helical coil spring vibration isolation devices.

B. Blower assemblies: Shall be statically and dynamically balanced and designed for continuous operation at maximum rated fan speed and horsepower.

C. Centrifugal blower housing: Formed and reinforced steel panels to make curved scroll housing with shaped cutoff.

D. Forward curved blower (fan) wheels: Galvanized or aluminum construction with inlet flange and shallow blades curved forward in direction of airflow. Mechanically attached to shaft with set screws.

E. Blower section motor source quality control: Blower performance shall be factory tested for flow rate, pressure, power, air density, rotation speed and efficiency. Ratings are to be established in accordance with AMCA 210, "Laboratory Methods of Testing Fans for Rating".

2.5 MOTORS

A. General: Blower motors greater than ¾ horsepower shall be "NEMA Premium™" unless otherwise indicated. Compliance with EPAct minimum energy-efficiency standards for single speed ODP and TE enclosures is not acceptable. Motors shall be heavy-duty, permanently lubricated type to match the fan load and furnished at the specified voltage, phase and enclosure. Drives shall be sized for a minimum of 150% of driven horsepower and pulleys shall be fully machined cast-type, keyed and fully secured to the fan wheel and motor shafts. Electric motors of ten horsepower or less shall be supplied with an adjustable drive pulley. Comply with requirements in Division 23 05 13, matched with fan load.

2.6 UNIT CONTROLS

A. The unit shall be constructed so that it can function as a stand-alone heating system controlled by factory-supplied controllers, thermostats and sensors or it can be operated as a heating system controlled by a Building Management System (BMS). This unit shall be controlled by a factory-installed microprocessor programmable controller (DDC) that is connected to various optional sensors.

B. Unit shall incorporate a DDC controller with integral LCD screen that provides text readouts of status, operating settings and alarm conditions. DDC controller shall have a built-in keypad to permit operator to access read-out screens and change settings without the use of ancillary equipment, devices or software. DDC controllers that require the use of equipment or software that is not factory-installed in the unit are not acceptable. Alarm readouts consisting of flashing light codes are not acceptable. Owner-specified ventilating conditions can be input by means of pushbuttons.

1. Operating protocol: The DDC shall be factory-programmed for BACnet.
2. Operating protocol: The DDC shall be factory-programmed for monitoring of the unit's status and control of the unit's functions].

C. Remote Interface: Contractor shall provide and install a Remote Interface that functions as a remote indicator of owner-selected operating parameters and also permits remote inputting of new operating parameters. Each remote panel shall have a large LCD user interface screen similar in form and function to the screen on the DDC. Installed location of room display shall be as indicated on the plans.

D. Sensors to be provided with the unit

1. Heating Inlet Air Sensor.
3. Dirty Filter Sensor.
4. Fire Stat Type III.

2.7 FILTERS

A. Unit shall have 2" thick MERV 8 disposable pleated filters located in the outdoor air intake and shall be accessible from the exterior of the unit.

3. EXECUTION

3.1 EXAMINATION

A. Prior to start of installation, examine area and conditions to verify correct location for compliance with installation tolerances and other conditions affecting unit performance. See unit IOM.

B. Examine roughing-in of plumbing, electrical and HVAC services to verify actual location and compliance with unit requirements. See unit IOM.

C. Proceed with installation only after all unsatisfactory conditions have been corrected.

3.2 INSTALLATION

A. Installation shall be accomplished in accordance with these written specifications, project drawings, manufacturer's installation instructions as documented in manufacturer's IOM, Best Practices and all applicable building codes.

3.3 CONNECTIONS

A. In all cases, industry Best Practices shall be incorporated. Connections are to be made subject to the installation requirements shown above.

1. Piping installation requirements are specified in Division 22 (Plumbing). Drawings indicate general arrangement of piping, fittings and specialties.

2. Duct installation and connection requirements are specified in Division 23 of this document.
3. Electrical installation requirements are specified in Division 26 of this document.

3.4 FIELD QUALITY CONTROL

A. Manufacturer's Field Service: Engage a factory authorized service representative to inspect field assembled components and equipment installation, to include electrical and piping connections. Report results to A/E in writing. Inspection must include a complete startup checklist to include (as a minimum) the following: Completed Start-Up Checklists as found in manufacturer's IOM.

3.5 START-UP SERVICE

A. Engage a factory authorized service representative to perform startup service. Clean entire unit, comb coil fins as necessary, and install clean filters. Verify water source for compliance with manufacturer's requirements for flow and temperature. Measure and record electrical values for voltage and amperage. Refer to Division 23 "Testing, Adjusting and Balancing" and comply with provisions therein.

3.6 DEMONSTRATION AND TRAINING

A. Engage a factory authorized service representative to train owner's maintenance personnel to adjust, operate and maintain the entire unit. Refer to Division 01 Section Closeout Procedures and Demonstration and Training.

END OF SECTION

SECTION 237402 - EVAPORATIVE COOLING UNIT

PART 1 GENERAL

1.1.1 SECTION INCLUDES

A. Evaporative Cooling Unit.

1.2 SUBMITTALS

A. Division 01 - Submittal Procedures: Submittal procedures.

B. Shop Drawings: Indicate assembly, unit dimensions, weight loading, required clearances, construction details, field connection details, and electrical characteristics and connection requirements.

C. Product Data, Submit the following:
1. Published Literature: Indicate capacities, ratings, gages and finishes of materials, and electrical characteristics and connection requirements.
2. Media: Data for Evaporative Media, performance data, assembly, and frames.
3. Fans: Performance and fan curves with specified operating point plotted, power, RPM.
4. Electrical Requirements: Power supply wiring including wiring diagrams for interlock and control wiring. Indicate factory installed and field installed wiring.

D. Manufacturer's Installation Instructions: Submit.

E. Manufacturer's Certificate: Certify products meet or exceed specified requirements.

1.3 CLOSEOUT SUBMITTALS

A. Division 01 - Execution and Closeout Requirements: Closeout procedures.

B. Operation and Maintenance Data: Submit instructions for lubrication, filter replacement, motor and drive replacement, spare parts lists, and wiring diagrams.

1.4 QUALITY ASSURANCE

A. Unit shall be tested, rated and certified in accordance with AMCA Standard 210.

B. Motor and pump shall be UL listed.

PART 2 PRODUCTS

2.1 ACCEPTABLE MANUFACTURERS

A. Champion.

B. Phoenix Manufacturing.

2.2 PERFORMANCE

A. Cooler performance shall meet or exceed that scheduled on the drawings.

2.3 CONSTRUCTION

A. Unit casing shall be constructed of heavy gauge hot dipped galvanized steel and have an electrostatically applied polyester epoxy coating for corrosion protection. Casing panels shall be removable to allow access to the air handling section and evaporative media section. The air inlet panel shall be louvered.

B. Evaporative media shall consist of corrugated cellulose material, treated to prevent rot and maintain rigidity. Saturation efficiency shall be not less than 76% at 600 ft./min. face velocity with no moisture carry over into the air handling section.

2.4 FAN

A. Fan shall be a forward curved centrifugal type, statically and dynamically balanced constructed of hot dipped galvanized steel.

B. Fan shall be belt driven, mounted on a solid corrosion resistant, steel shaft within permanently lubricated, sealed, cast iron, pillow block, ball bearings.

C. Motors shall be of the horsepower scheduled and shall be mounted on an adjustable base.

2.5 WATER DISTRIBUTION SYSTEM

A. Pumps shall be UL listed submersible type with inlet screen. Pump shall be Clean Machine or approved equal.

B. Water shall be distributed over the media via a hose and distributor pipe to the dispersion pan to insure complete wetting of the media.

C. Provide a bleed line from the pump discharge to drain.

D. Provide float operated make-up water valve.

E. Provide overflow/drain nipple.

PART 3 EXECUTION

3.1 INSTALLATION

A. Install evaporative cooler in accordance with manufacturer's instructions and as indicated on the drawings.

B. Provide drain line from cooler to drain.

END OF SECTION

SECTION 23 74 13 – PACKAGED OUTDOOR CENTRAL STATION AIR HANDLING UNIT

PART 1 GENERAL

1.01 WORK INCLUDED

A. Applied Air Handling Units.

1.02 REFERENCES

A. AMCA Publication 99 - Standards Handbook.
B. AMCA Publication 611 - Certified Ratings Program - Airflow Measurement Performance
C. AMCA Standard 500-D - Laboratory Methods of Testing Dampers for Rating.
D. ANSI/ABMA Standard 9 - Load Ratings and Fatigue Life for Ball Bearings.
E. ANSI/AMCA Standard 204 - Balance Quality and Vibration Levels for Fans.
F. ANSI/AMCA Standard 610 - Laboratory Methods of Testing Airflow Measuring Stations for Rating.
G. ANSI/AHRI Standard 410 - Forced Circulation Air-Cooling and Air-Heating Coils.
H. ANSI/AHRI Standard 430 - Central Station Air Handling Units.
I. ANSI/AHRI Standard 1060 - Rating Air-To-Air Energy Recovery Ventilation Equipment
J. ANSI/ASHRAE Standard 52.2 - Method of Testing General Ventilation Air-Cleaning Devices for Removal Efficiency by Particle Size.
K. ANSI/ASHARE Standard 62.1 - Ventilation for Acceptable Indoor Air Quality.
L. ANSI/ASHARE Standard 90.1 - Energy Standard for Buildings Except Low-Rise Residential Buildings.
M. ANSI/NEMA MG 1 - Motors and Generators.
N. ANSI/UL 900 - Standard for Safety Air Filter Units.
O. AHRI Standard 260 - Sound rating of Ducted Air Moving and Conditioning Equipment.
P. ASHRAE Standard 84 - Method of Testing Air-to-Air Heat Exchangers.
Q. ASHRAE Standard 111 - Measurement, Testing, Adjusting, and Balancing of Building HVAC Systems.
R. ASTM B117 - Standard Practice for Operation Salt Spray Apparatus.
S. ASTM C1071 - Thermal and Acoustic Insulation (Mineral Fiber, Duct Lining Material).
T. ASTM C1338 - Standard Test Method for Determining Fungi Resistance of Insulation Material and Facings.
U. ASTM E477 - Standard Test Method for Measure Acoustical and Airflow Performance of Duct Liner
V. NFPA 70 - National Electrical Code
W. NFPA 90A - Standard for the Installation of Air Conditioning and Ventilation Systems.
X. UL 1995 - Standard for Safety Heating and Cooling Equipment

1.03 QUALITY ASSURANCE

A. Air Coils: Certify capacities, pressure drops and selection procedures in accordance with current AHRI Standard 410.
B. Air handling units with fan sections utilizing single fans shall be rated and certified in accordance with AHRI Standard.
C. Air handling units with fan sections utilizing multiple fans shall be rated in accordance with AHRI Standard 430 for airflow, static pressure, and fan speed performance.
D. Airflow monitoring station: Certify airflow measurement station performance in accordance with AMCA 611.

1.04 SUBMITTALS

A. No equipment shall be fabricated or delivered until the receipt of approved shop drawings from the Engineer.
B. AHU manufacturer shall provide the following information with each shop drawing/product data submission:
   1. All electrical, piping, and ductwork requirements, including sizes, connection locations, and connection method recommendations.
   2. Each component of the unit shall be identified and mechanical specifications shall be provided for unit and accessories describing construction, components, and options.
   3. All performance data, including capacities and airside and waterside pressure drops, for components.
   4. Fan curves shall be provided for fans with the design operating points indicated. Data shall be corrected to actual operating conditions, temperatures, and altitudes.
   5. A filter schedule must be provided for each air handling unit supplied by the air handling unit manufacturer. Schedule shall detail unit tag, unit size, corresponding filter section location within the AHU, filter arrangement (e.g. angled/flat), filter depth, filter type (e.g. pleated media), MERV rating, and filter quantity and size.
   6. A schedule detailing necessary trap height shall be provided for each air handling unit. Schedule shall detail unit tag, unit size, appropriate trap schematic with recommended trap dimensions, and unit supplied base rail height. Contractor shall be responsible for additional trap height required for trapping and insulation beyond the unit supplied base rail height by adequate housekeeping pad.
   7. A coil valve coordination schedule shall be provided for each air handling unit supplied by the air handling unit manufacturer. Schedule shall detail unit tag, coil type and corresponding section location within the AHU, valve style (e.g. global, ball), valve type (e.g. electronic 2-way/3-way), valve position (e.g. normally open/closed), size, flow coefficient (CV), and close-off pressure.
   8. An electrical MCA - MOP schedule shall be provided for each electrical circuit to which field-power must be supplied. Schedule to detail unit tag, circuit description, voltage/phase/hertz, Minimum Circuit Ampacity (MCA), and calculated Maximum Overcurrent Protection (MOP).
   9. Sound data shall be provided using AHRI 260 test methods. Unit discharge, inlet, and radiated sound power levels in dB shall be provided for 63, 125, 250, 500, 1000, 2000, 4000 and 8000Hz.

C. The AHU manufacturer shall provide appropriate sets of submittals as referenced in the General Conditions and shall submit to the Owner electronic copies of the IOM.
D. The AHU manufacturer shall list any exceptions to the specification.

1.05 REGULATOR REQUIREMENTS

A. Agency Listings/Certifications
1. Unit shall be manufactured to conform to UL 1995 and shall be listed by either UL/CUL or ETL. Units shall be provided with listing agency label affixed to the unit. In the event the unit is not UL/CUL or ETL approved, the contractor shall, at his/her expense, provide for a field inspection by a UL/CUL or ETL representative to verify conformance. If necessary, contractor shall perform modifications to the unit to comply with UL/CUL or ETL as directed by the representative, at no additional expense to the owner.
2. Certify air handling units in accordance with AHRI Standard 430. Units shall be provided with certification label affixed to the unit. If air handling units are not certified in accordance with AHRI Standard 430, contractor shall be responsible for expenses associated with testing of units after installation to verify performance of fan(s). Any costs incurred to adjust fans to meet scheduled capacities shall be the sole responsibility of the contractor.
3. Certify air handling coils in accordance with AHRI Standard 410. Units shall be provided with certification label affixed to the unit. If air handling coils are not certified in accordance with AHRI Standard 410, contractor shall be responsible for expenses associated with testing of coils after installation to verify performance of coil(s). Any costs incurred to adjust coils to meet scheduled capacities shall be the sole responsibility of the contractor.

1.06 DELIVERY, STORAGE, AND HANDLING

A. Comply with manufacturer's installation instructions for rigging, unloading, and transporting units.
B. Units shall ship fully assembled up to practical shipping and rigging limitations. Units not shipped fully assembled shall have tags and airflow arrows on each section to indicate location and orientation in direction of airflow. Shipping splits shall be clearly defined on submittal drawings. Cost associated with non-conformance to shop drawings shall be the responsibility of the manufacturer. Each section shall have lifting lugs for field rigging, lifting and final placement of AHU section(s). AHU's less than 100-inches wide shall allow for forklift transport and maneuverability on the jobsite.
C. Deliver units to jobsite with fan motor(s), sheave(s), and belt(s) completely assembled and mounted in units.
D. Unit shall be shipped in a clear shrink-wrap or stretch-wrap to protect unit from in-transit rain and debris per ASHRAE 62.1 recommendations.
E. Installing contractor shall be responsible for storing AHU in a clean, dry place and protect from weather and construction traffic. Handle carefully to avoid damage to components, enclosures, and finish.

1.07 START-UP AND OPERATING REQUIREMENTS

A. Do not operate units for any purpose, temporary or permanent, until ductwork is clean, filters in place, bearings lubricated (if applicable), condensate properly trapped, piping connections verified and leak-tested, belts aligned and tensioned, all shipping braces removed, bearing set screws torqued, and fan has been test run under observation.

1.08 WARRANTY

A. AHU manufacturer shall provide, at no additional cost, a standard parts warranty that covers a period of one year from unit start-up. This warrants that all products are free from defects in material and workmanship and shall meet the capacities and ratings set forth in the equipment manufacturer's catalog and bulletins.

PART 2 PRODUCTS

2.01 ACCEPTABLE MANUFACTURERS

A. Approved manufacturer shall be Trane, with pre-approved alternates considered. Manufacturers not pre-approved, must obtain pre-approval in writing from consulting engineer prior to bid day. Alternates must comply with all performance and features as called for in this specification. Job awarded on basis of specified equipment. Alternate will be evaluated and considered after job is awarded.
B. Manufacturer must clearly define any exceptions made to Plans and Specifications. Any deviations in layout or arrangement shall be submitted to consulting engineer prior to bid date. Acceptance of deviation(s) from specifications shall be in the form of written approval from the consulting engineer. Mechanical Contractor is responsible for expenses that occur due to exceptions made.
C. Approved Manufacturers:
1.Trane.
2.Carrier
3.Daikin McQuay.

2.02 GENERAL

A. Unit layout and configuration shall be as defined in project plans and schedule.
B. Manufacturer to provide an integral base frame for either ceiling suspension of units or to support and raise all sections of the unit for proper trapping. Contractor will be responsible for providing a housekeeping pad when unit base frame is not of sufficient height to properly trap unit. Unit base frames not constructed of galvanized steel shall be chemically cleaned and coated with both a rust-inhibiting primer and finished coat of rust-inhibiting enamel. Unit base height to be included in trap.

2.03 UNIT CASING

A. Unit manufacturer shall ship unit in segments as specified by the contractor for ease of installation in tight spaces. The entire air handler shall be constructed of galvanized steel. Casing finished to meet ASTM B117 250-hour salt-spray test. The removal of access panels or access doors shall not affect the structural integrity of the unit. All removable panels shall be gasketed. All doors shall have gasketing around full perimeter to prevent air leakage. Contractor shall be responsible to provide connection

flanges and all other framework that is needed to properly support the unit.

B. Casing performance - Casing air leakage shall not exceed leak class 6 (CL = 6) per ASHRAE 111 at specified casing pressure, where maximum casing leakage (cfm/100 ft2 of casing surface area) = CL X P0.65.

C. Air leakage shall be determined at 1.00 times maximum casing static pressure up to 8 inches w.g. Specified air leakage shall be accomplished without the use of caulk. Total estimated air leakage shall be reported for each unit in CFM, as a percentage of supply air, and as an ASHRAE 111 Leakage Class.

D. Under 55F supply air temperature and design conditions on the exterior of the unit of 81F dry bulb and 73F wet bulb, condensation shall not form on the casing exterior. The AHU manufacturer shall provide tested casing thermal performance for the scheduled supply air temperature plotted on a psychrometric chart. The design condition on the exterior of the unit shall also be plotted on the chart. If tested casing thermal data is not available, AHU manufacturer shall provide, in writing to the Engineer and Owner, a guarantee against condensation forming on the unit exterior at the stated design conditions above. The guarantee shall note that the AHU manufacturer will cover all expenses associated with modifying units in the field should external condensate form on them. In lieu of AHU manufacturer providing a written guarantee, the installing contractor must provide additional external insulation on AHU to prevent condensation.

E. Unit casing (wall/floor/roof panels and doors) shall be able to withstand up to 1.5 times design static pressure, or 8-inch w.g., whichever is less, and shall not exceed 0.0042 per inch of panel span (L/240).

F. Floor panels shall be double-wall construction and designed to support a 300-lb load during maintenance activities and shall deflect no more than 0.0042 per inch of panel span.

G. Unit casing panels shall be 2-inch double-wall construction, with solid galvanized exterior and solid galvanized interior, to facilitate cleaning of unit interior.

H. Unit casing panels (roof, walls, floor) and doors shall be provided with a minimum thermal resistance (R-value) of 13 Hr*Ft2*°F/BTU.

I. Unit casing panels (roof, walls, floor) and external structural frame members shall be completely insulated filling the entire panel cavity in all directions so that no voids exist. Panel insulation shall comply with NFPA 90A.

J. Casing panel inner liners must not extend to the exterior of the unit or contact the exterior frame. A mid-span, no-through-metal, internal thermal break shall be provided for all unit casing panels.

K. Access panels and/or access doors shall be provided in all sections to allow easy access to drain pan, coil(s), motor, drive components and bearings for cleaning, inspection, and maintenance.

L. Access panels and doors shall be fully removable without the use of specialized tools to allow complete access of interior surfaces.

2.04 OUTDOOR UNIT FEATURES

A. Outdoor Casing Details - In addition to all other details specified within for air handling units, units that are installed outdoors shall also comply with the following -

1. Outdoor air handling units shall have only single door handles for each door linking multiple latching points necessary to maintain the specified air leakage integrity of the unit and ease of maintenance.

2. Unit Paint - External surfaces of all outdoor unit casings shall be prepared and painted with a minimum 1.5 mil thick enamel finish or equal. Paint shall be able to withstand a salt spray test in accordance with ASTM B117 for a minimum of 500 consecutive hours.
3. Unit Base - Outdoor units shall have a welded base and steel cross members for structural rigidity and supports the full perimeter of the air handling unit. AHU panels must overhang the primary unit base such that no ledge exists for water to pool . The entire AHU perimeter shall be sealed for additional water management protection. A drain pan under the entire unit or sections shall not be an acceptable alternative to prevent water from entering the building space .
4. Unit Roof - Outdoor unit roofs shall incorporate a standing seam on the exterior to ensure a rigid roof construction and prevent water infiltration . Roof assembly shall overhang all walls by 1.5-inch minimum to prevent sheeting from roof to side panels . Rain gutters shall also be provided over all doors to direct rain away from the door assembly. Outdoor roofs shall be sloped, not less than 0.125 inches per foot, for water drainage. Where outdoor units are shipped in multiple sections, provide standing-seam joiners at each split with adhesive, hardware, and cover strips for field joining by the installing contractor.
5. Weather Hoods - Outside and exhaust air weather hoods shall be fabricated from the same material as the unit exterior. Hoods shall extend past the perimeter of the unit casing opening to ensure the hood does not obstruct the airflow path. Hoods shall be painted with the same paint requirements identified for the external casing herein.
   a. Outside air inlet hoods for each outside damper shall be provided with a high performance moisture eliminator to prevent entrainment of water into the unit from outside air. Exhaust hoods shall be provided on exhaust air openings and shall include a bird screen.
   b. All hoods shall be sized for 100 percent of nominal damper capacities and with bird screens or similar protection to prevent nesting and entry into AHU inlet or exhaust paths.
6. Factory Supplied Roofcurb - Roof curbs shall be provided where indicated on the plans and shall be galvanized steel. Roof curb shall support the full perimeter of the air handling unit, including pipe chases. A 2" x 4" nominal wood nailing strip shall be supplied attached to the roof curb. Wood nailing strip shall be of #4 Spruce or #4 Yellow Pine. Roof curb shall include frame work necessary to support supply and return duct installation prior to unit placement. Roof curb shall be shipped loose for field installation prior to unit placement.

2.05 ACCESS DOORS

A. Access doors shall be 2-inch double-wall construction. Interior and exterior shall be of the same construction as the interior and exterior wall panels.
B. All doors downstream of the cooling coil shall be provided with a thermal break construction of door panel and door frame.
C. Gasketing shall be provided around the full perimeter of the doors to prevent air leakage.
D. Door hardware shall be surface-mounted to prevent through-cabinet penetrations that

could likely weaken the casing leakage and thermal performance.

E. Handle hardware shall be designed to prevent unintended closure.

F. Access doors shall be hinged and removable without the use of specialized tools.

G. Hinges shall be interchangeable with the door handle hardware to allow for alternating door swing in the field to minimize access interference due to unforeseen job site obstructions.

H. Door handle hardware shall be adjustable and visually indicate locking position of door latch external to the section.

I. All doors shall be a 60-inch high when sufficient unit height is available, or the maximum height allowed by the unit height.

J. A single door handle shall be provided for each door linking multiple latching points necessary to maintain the specified air leakage integrity of the unit.

2.06 PRIMARY DRAIN PANS

A. All cooling coil sections shall be provided with an insulated, double-wall, galvanized drain pan.

B. The drain pan shall be designed in accordance with ASHRAE 62.1 being of sufficient size to collect all condensation produced from the coil and sloped in two planes, pitched toward drain connections, promoting positive drainage to eliminate stagnant water conditions when unit is installed level and trapped per manufacturer's requirements. See section 2.07, paragraph F through H for specifications on intermediate drain pans between cooling coils.

C. The outlet shall be located at the lowest point of the pan and shall be sufficient diameter to preclude drain pan overflow under any normally expected operating condition.

D. All drain pan threaded connections shall be visible external to the unit. Threaded connections under the unit floor shall not be accepted.

E. Drain connections shall be of the same material as the primary drain pan and shall extend a minimum 2-1/2-inch beyond the base to ensure adequate room for field piping of condensate traps.

F. The installing contractor is responsible to ensure the unit is installed level, trapped in accordance with the manufacturer's requirements, and visually inspected to ensure proper drainage of condensate.

G. Coil support members inside the drain pan shall be of the same material as the drain pan and coil casing.

H. If drain pans are required for heating coils, access sections, or mixing sections they will be indicated in the plans.

2.07 FANS

A. Fan sections shall have a minimum of one hinged and latched access door located on the drive side of the unit to allow inspection and maintenance of the fan, motor, and drive components. Construct door(s) per Section 2.04.

B. Provide fans of type and class as specified on the schedule. Fan shafts shall be solid steel, coated with a rust-inhibiting coating, and properly designed so that fan shaft does not pass through first critical speed as unit comes up to rated RPM. All fans shall be statically and dynamically tested by the manufacturer for vibration and alignment as an assembly at the operating RPM to meet design specifications. Fans that are

selected with inverter balancing shall first be dynamically balanced at design RPM. The fans then will be checked in the factory from 25% to 100% of design RPM to insure they are operating within vibration tolerance specifications, and that there are no resonant frequency issues throughout this operating range. Inverter balancing that requires lockout frequencies inputted into a variable frequency drive to in order to bypass resonant frequencies shall not be acceptable. If supplied in this manner by the unit manufacturer, the contractor will be responsible for rebalancing in the field after unit installation. Fans selected with inverter balancing shall have maintenance free, circumferential conductive micro fiber shaft grounding ring installed on the fan motor to discharge shaft currents to ground.

C. Belt-driven fans shall be provided with grease lubricated, self-aligning, anti-friction bearings selected for L-50 200,000-hour average life per ANSI/AFBMA Standard 9. Lubrication lines for both bearings shall be extended to the drive side of the AHU and rigidly attached to support bracket with zerk fittings. Lubrication lines shall be a clear, high-pressure, polymer to aid in visual inspection. If extended lubrication lines are not provided, manufacturer shall provide permanently lubricated bearing with engineering calculations for proof of bearing life.

D. All fans, including direct drive plenum fans, shall be mounted on isolation bases. Internally-mounted motor shall be on the same isolation base. Fan and motor shall be internally isolated with spring isolators. A flexible connection shall be installed between fan and unit casing to ensure complete isolation. Flexible connection shall comply with NFPA 90A and UL 181 requirements. If fans and motors are not internally isolated, then the entire unit shall be externally isolated from the building, including supply and return duct work, piping, and electrical connections. External isolation shall be furnished by the installing contractor in order to avoid transmission of noise and vibration through the ductwork and building structure.

E. MOTORS AND DRIVES

1. All motors and drives shall be factory-installed and run tested. All motors shall be installed on a slide base to permit adjustment of belt tension. Slide base shall be designed to accept all motor sizes offered by the air-handler manufacturer for that fan size to allow a motor change in the future, should airflow requirements change. Fan sections without factory-installed motors shall have motors field installed by the contractor. The contractor shall be responsible for all costs associated with installation of motor and drive, alignment of sheaves and belts, run testing of the motor, and balancing of the assembly.
2. Motors shall meet or exceed all NEMA Standards Publication MG 1 - 2006 requirements and comply with NEMA Premium efficiency levels when applicable. Motors shall comply with applicable requirements of NEC and shall be UL Listed.
3. Fan Motors shall be heavy duty, open drip-proof operable at 460 volts, 60Hz, 3-phase. If applicable, motor efficiency shall meet or exceed NEMA Premium efficiencies.
4. Belt driven fans shall use 4-pole, 1800 rpm, motors, NEMA B design, with Class B insulation, capable to operate continuously at 104 deg F (40 deg C) without tripping overloads.
5. Direct driven fans shall use 2-pole (3600 rpm), 4-pole (1800 rpm) or 6-pole (1200 rpm) motors, NEMA Design B, with Class B insulation capable to

operate continuously at 104 deg F (40 deg C) without tripping overloads.

6. Motors shall have a +/- 10 percent voltage utilization range to protect against voltage variation.
7. V-Belt Drive shall be fixed pitch rated at 1.5 times the motor nameplate. Drives 20 hp and larger or any drives on units equipped with VFDs shall be fixed pitch.
8. All fans with motors 15 hp and larger shall be equipped with multiple belt drives.
9. Manufacturer shall provide for each fan a nameplate with the following information to assist air balance contractor in start up and service personnel in maintenance. Fan and motor sheave part number. Fan and motor bushing part number. Number of belts and belt part numbers. Fan design RPM and motor HP. Belt tension and deflection. Center distance between shafts.

2.08 COILS

A. Coils section header end panel shall be removable to allow for removal and replacement of coils without impacting the structural integrity of the unit.
B. Install coils such that headers and return bends are enclosed by unit casing to ensure that if condensate forms on the header or return bends, it is captured by the drain pan under the coil.
C. Coils shall be manufactured with plate fins to minimize water carryover and maximize airside thermal efficiency. Fin tube holes shall have drawn and belled collars to maintain consistent fin spacing to ensure performance and air pressure drop across the coil as scheduled. Tubes shall be mechanically expanded and bonded to fin collars for maximum thermal conductivity. Use of soldering or tinning during the fin-to-tube bonding process is not acceptable due to the inherent thermal stress and possible loss of bonding at that joint.
D. Construct coil casings of galvanized steel. End supports and tube sheets shall have belled tube holes to minimize wear of the tube wall during thermal expansion and contraction of the tube.
E. All coils shall be completely cleaned prior to installation into the air handling unit. Complete fin bundle in direction of airflow shall be degreased and steam cleaned to remove any lubricants used in the manufacturing of the fins, or dirt that may have accumulated, in order to minimize the chance for water carryover.
F. When two or more cooling coils are stacked in the unit, an intermediate drain pan shall be installed between each coil. The intermediate drain pan shall be designed being of sufficient size to collect all condensation produced from the coil and sloped to promote positive drainage to eliminate stagnant water conditions. The intermediate drain pan shall be constructed of the same material as the sections primary drain pan.
G. The intermediate drain pan shall begin at the leading face of the water-producing device and be of sufficient length extending downstream to prevent condensate from passing through the air stream of the lower coil.
H. Intermediate drain pan shall include downspouts to direct condensate to the primary drain pan. The intermediate drain pan outlet shall be located at the lowest point of the pan and shall be sufficient diameter to preclude drain pan overflow under any normally expected operating condition.
I. Hydronic Coils
   1. Supply and return header connections shall be clearly labeled on unit exterior

such that direction of coil water-flow is counter to direction of unit air-flow.

2. Hydronic coils shall be supplied with factory installed drain and vent piping to the unit exterior.

2.09 FILTERS

A. Provide factory-fabricated filter section of the same construction and finish as unit casings. Filter section shall have side access filter guides and access door(s) extending the full height of the casing to facilitate filter removal. Construct doors in accordance with Section 2.04. Provide fixed filter blockoffs as required to prevent air bypass around filters. Blockoffs shall not need to be removed during filter replacement. Filters to be of size, and quantity needed to maximize filter face area of each particular unit size.

B. Filter type, MERV rating, and arrangement shall be provided as defined in project plans and schedule

C. Manufacturer shall provide one set of startup filters.

2.10 DAMPERS

A. All dampers,shall be internally mounted. Dampers shall be premium ultra low leak and located as indicated on the schedule and plans. Blade arrangement (parallel or opposed) shall be provided as indicated on the schedule and drawings. Dampers shall be Ruskin CD60 double-skin airfoil design or equivalent for minimal air leakage and pressure drop. Leakage rate shall not exceed 3 CFM/square foot at one inch water gauge complying with ASHRAE 90.1 maximum damper leakage and shall be AMCA licensed for Class 1A. All leakage testing and pressure ratings shall be based on AMCA Standard 500-D. Manufacturer shall submit brand and model of damper(s) being furnished, if not Ruskin CD60.

2.11 ACCESS SECTIONS

A. Access sections shall be provided where indicated in the schedule and plans to allow additional access for inspection, cleaning, and maintenance of unit components. The unit shall be installed for proper access. Procedure for proper access, inspection and cleaning of the unit shall be provided in the AHU manufacturer's maintenance manual. Access section doors shall be constructed per Section 2.04.

2.12 Variable Frequency Drives (VFDs)

A. Variable frequency drives shall be provided, mounted and wired by the AHU manufacturer as indicated on the schedule and drawings. All standard and optional features shall be included within the VFD enclosure, unless otherwise specified. The VFDs shall be UL listed. The listing shall allow mounting in plenum or other air handling compartments.

B. The VFD shall convert incoming fixed frequency three-phase AC power into a variable frequency and voltage for controlling the speed of three-phase AC motors. The motor current shall closely approximate a sine wave. Motor voltage shall be varied with frequency to maintain desired motor magnetization current suitable for centrifugal pump and fan control and to eliminate the need for motor derating.

C. With the motor's rated voltage applied to the VFD input, the VFD shall allow the motor to produce full rated power at rated amps, RMS fundamental volts, and speed without using the motor's service factor. VFDs utilizing sine weighted/coded modulation (with or without 3rd harmonic injection) must provide data verifying that the motors will not draw more than full load current during full load and full speed operation.

D. The VFD shall include an input full-wave bridge rectifier and maintain a fundamental power factor near unity regardless of speed or load.

E. The VFD and options shall be tested to ANSI/UL Standard 508. The complete VFD, including all specified options, shall be assembled by the manufacturer, which shall be UL 508 certified for the building and assembly of option panels. Assembly of separate panels with options by a third-party is not acceptable. The appropriate UL stickers shall be applied to both the VFD and option panel, in the case where these are not contained in one panel.

F. The VFD shall have DC link reactors on both the positive and negative rails of the DC bus to minimize power line harmonics. VFDs without DC link reactors shall provide a minimum 3% impedance line reactor.

G. The VFDs full load amp rating shall meet or exceed NEC Table 430-150. The VFD shall be able to provide full rated output current continuously, 110% of rated current for 60 seconds and 160% of rated current for up to 0.5 second while starting.

H. The VFD shall be able to provide full torque at any selected frequency from 28 Hz to base speed to allow driving direct drive fans without derating.

I. An automatic energy optimization selection feature shall be provided standard in the VFD. This feature shall automatically and continually monitor the motor¿s speed and load and adjust the applied voltage to maximize energy savings and provide up to an additional 3% to 10% energy savings.

J. Input and output power circuit switching shall be able to be accomplished without interlocks or damage to the VFD. Switching rate may be up to 1 time per minute on the input and unlimited on the output.

K. An automatic motor adaptation test algorithm shall measure motor stator resistance and reactance to optimize performance and efficiency. It shall not be necessary to run the motor or de-couple the motor from the load to run the test.

L. Galvanic and/or optical isolation shall be provided between the VFDs power circuitry and control circuitry to ensure operator safety and to protect connected electronic control equipment from damage caused by voltage spikes, current surges, and ground loop currents. VFDs not including either galvanic or optical isolation on both analog I/O and discrete I/O shall include additional isolation modules.

M. The VFD shall minimize the audible motor noise through the use of an adjustable carrier frequency. The carrier frequency shall be automatically adjusted to optimize motor and VFD efficiencies while reducing motor noise.

N. Protective Features

1. Protection shall be provided against input transients, loss of AC line phase, output short circuit, output ground fault, overvoltage, undervoltage, VFD overtemperature and motor overtemperature. The VFD shall display all faults as words. Codes are not acceptable.

2. The VFD shall be protected from sustained power or phase loss. The VFD shall provide full rated output with an input voltage as low as 90% of the nominal. The VFD shall continue to operate with reduced output with an input voltage as low as 164 V AC for 208/230 volt units, 313 V AC for 460 volt units, and 394

volts for 600 volts units.

3. The VFD shall incorporate a motor preheat circuit to keep the motor warm and prevent condensation build up in the stator.
4. The VFD package shall include semi-conductor rated input fuses to protect power components.
5. To prevent breakdown of the motor winding insulation, the VFD shall be designed to comply with IEC Part 34-17. Otherwise the AHU manufacturer shall ensure that inverter rated motors are supplied.
6. The VFD shall include a "signal loss detection" circuit to sense the loss of an analog input signal such as 4 to 20 mA or 2 to 10 V DC, and shall be programmable to react as desired in such an instance.
7. The VFD shall function normally when the keypad is removed while the VFD is running and continue to follow remote commands. No warnings or alarms shall be issued as a result of removing the keypad.
8. The VFD shall catch a rotating motor operating forward or reverse up to full speed.
9. The VFD shall be rated for 100,000 amp interrupting capacity (AIC).
10. The VFD shall include current sensors on all three output phases to detect and report phase loss to the motor. The VFD shall identify which of the output phases is low or lost.
11. The VFD shall continue to operate without faulting until input voltage reaches 300 V AC on 208/230 volt units, 539 V AC on 460 volt units, and 690 volts on 600 volt units.

O. Interface Features

1. Hand/Start, Off/Stop and Auto/Start selector switches shall be provided to start and stop the VFD and determine the speed reference. On units with bypass, a VFD/Off/Bypass selector switch shall be provided.
2. The VFD shall be able to be programmed to provide a 24 V DC output signal to indicate that the VFD is in Auto/Remote mode.
3. The VFD shall provide digital manual speed control. Potentiometers are not acceptable.
4. A lockable, alphanumeric backlit display keypad shall be provided. The keypad shall be remotely mountable up to 10 feet away using standard 9-pin cable.
5. The keypads for all sizes of VFDs shall be identical and interchangeable.
6. To set up multiple VFDs, it shall be possible to upload all setup parameters to the VFDs keypad, place that keypad on all other VFDs in turn and download the setup parameters to each VFD. To facilitate setting up VFDs of various sizes, it shall be possible to download from the keypad only size independent parameters.
7. The display shall be programmable to display in English, Spanish and French at a minimum.
8. A red FAULT light, a yellow WARNING light and a green POWER-ON light shall be provided. These indications shall be visible both on the keypad and on the VFD when the keypad is removed.
9. A quick setup menu with factory preset typical HVAC parameters shall be provided on the VFD eliminating the need for macros.
10. At a minimum, the following points shall be controlled and/or accessible:
    a. VFD Start/Stop
    b. Speed reference

c. Fault diagnostics
d. Meter points

(i)	Motor power in HP
(ii)	Motor power in kW
(iii)	Motor kW-hr
(iv)	Motor current
(v)	Motor voltage
(vi)	Hours run
(vii)	2 feedback signals
(viii)	DC link voltage
(ix)	Thermal load on motor
(x)	Thermal load on VFD
(xi)	Heatsink temperature

11. Four additional Form C 230 volt programmable relays shall be available for field installation within the VFD
12. LonWorks® communication shall be provided within the VFD.
13. Two set-point control interfaces (PID control) shall be standard in the unit. The VFD shall be able to look at two feedback signals, compare with two set-points and make various process control decisions.
14. Floating point control interface shall be provided to increase/decrease speed in response to contact closures.
15. Four simultaneous displays shall be available. They shall include frequency or speed, run time, output amps and output power. VFDs unable to show these four displays simultaneously shall provide panel meters.
16. Sleep mode shall be provided to automatically stop the VFD when its speed drops below set ¿sleep¿ level for a specified time. The VFD shall automatically restart when the speed command exceeds the set ¿wake¿ level.
17. The sleep mode shall be functional in both follower mode and PID mode.
18. A run permissive circuit shall be provided to accept a ¿system ready¿ signal to ensure that the VFD does not start until dampers or other auxiliary equipment are in the proper state for VFD operation. The run permissive circuit shall also be capable of sending an output signal as a start command to actuate external equipment before allowing the VFD to start.
19. The following displays shall be accessible from the control panel in actual units: Reference Signal Value, Output Frequency in Hz or percent, Output Amps, Motor HP, Motor kW, kWhr, Output Voltage, DC Bus Voltage, VFD Temperature in degrees, and unit CFM.
20. The display shall be programmed to read in inches of water column (in-wg).
21. The VFD shall be able to be programmed to sense the loss of load and signal a no load/broken belt warning or fault.
22. If the temperature of the VFDs heat sink rises to 80°C, the VFD shall automatically reduce its carrier frequency to reduce the heat sink temperature. If the temperature of the heat sink continues to rise the VFD shall automatically reduce its output frequency to the motor. As the VFDs heat sink temperature returns to normal, the VFD shall automatically increase the output frequency to the motor and return the carrier frequency to its normal switching speed.

23. The VFD shall have temperature controlled cooling fans for quiet operation and minimized losses.
24. The VFD shall store in memory the last 10 faults and related operational data.
25. Eight programmable digital inputs shall be provided for interfacing with the systems control and safety interlock circuitry.
26. Two programmable relay outputs, one Form C 240 V AC, one Form A 30 V AC, shall be provided for remote indication of VFD status.
27. Three programmable analog inputs shall be provided and shall accept a direct-or-reverse acting signal. Analog reference inputs accepted shall include two voltage (0 to 10 V DC, 2 to 10 V DC) and one current (0 to 20 mA, 4 to 20 mA) input.
28. Two programmable 0 to 20 mA analog outputs shall be provided for indication of VFD status. These outputs shall be programmable for output speed, frequency, current and power. They shall also be programmable to provide a selected 24V DC status indication.
29. Under fire mode conditions, the VFD shall be able to be programmed to automatically default to a preset speed.

P. Adjustments
1. The VFD shall have an adjustable carrier frequency in steps of not less than 0.1 kHz to allow tuning the VFD to the motor.
2. A minimum of sixteen preset speeds shall be provided.
3. Four acceleration and four deceleration ramps shall be provided. Accel and decel time shall be adjustable over the range from 0 to 3,600 seconds to base speed. The shape of these curves shall be automatically contoured to ensure no-trip acceleration and deceleration.
4. Four current limit settings shall be provided.
5. If the VFD trips on one of the following conditions, the VFD shall be programmable for automatic or manual reset: undervoltage, overvoltage, current limit and inverter overload.
6. The number of restart attempts shall be selectable from 0 through 20 or infinitely and the time between attempts shall be adjustable from 0 through 600 seconds.
7. An automatic ¿on delay¿ shall be selectable from 0 to 120 seconds.

Q. Service Conditions
1. VFDs shall provide full output in an ambient temperature from -10 to 50°C (14 to 104°F).
2. VFDs shall provide full output in a relative humidity from 0 to 95%, non-condensing.
3. VFDs shall provide full output up to 3,300 feet elevation without derating.
4. VFDs shall provide full output with an AC line voltage variation from -10 to +10% of nominal voltage.
5. No side clearance shall be required for cooling of any units. All power and control wiring shall be done from the bottom.

R. Warranty
1. The VFD shall be warranted by the manufacturer for a period of 36 months from start-up. The warranty shall include parts, labor, travel costs and living expenses incurred by the manufacturer to provide factory-authorized on-site service.

2.13 Factory-Installed Motor Wire Termination, VFD, and Combination Starter/Disconnect Enclosures

A. VFDs shall be factory mounted on the drive side of the fan section. VFD may be mounted on the interior of the unit, accessible from the unit exterior through an access door, or on the casing exterior in a NEMA Type 1 enclosure for indoor units. If not mounted on the fan section due to NEC disconnect height limitations or serviceability constraints in the mechanical equipment room, VFD may be mounted in another location other than the fan.

B. Any welds shall be properly finished with no rough edges. Enclosures shall house circuit breaker disconnects, bypass circuitry, Drive-OFF-Bypass switches, manual speed controls, and control transformers. VFDs and starter/disconnects shall have an external disconnect located on the outside of the access door.

2.14 Factory Wiring of Lights, VFDs, and Combination Starters/Disconnects

A. VFDs shall be wired per NEC, UL, and NFPA 90A requirements. Units with factory-mounted controls shall also include power wiring from the VFD or starter/disconnect control transformer to the control system transformers. Units with VFDs and factory-mounted controls shall have a binary start-stop signal and an analog speed signal wired from the direct digital controller to the VFD.

PART 3 EXECUTION

3.01 SHIPPING

A. Paper copies of the IOM shall also be shipped with each AHU.

B. The AHU manufacturer shall identify all shipments with the order number. Enough information shall be provided with each shipment to enable the Mechanical Contractor to confirm the receipt of units when they are received. For parts too small to mark individually, the AHU manufacturer shall place them in containers.

C. To protect equipment during shipment and delivery, all indoor units shall be completely stretch or shrink wrapped. Wrap shall be a minimum of 7 mil plastic. Pipe ends and pipe connection holes in the casing shall be capped or plugged prior to shipment

D. After loading the equipment for shipment, the AHU manufacturer shall contact the shipping contact on the order and provide the name of the carrier, description of equipment, order number, shipping point, and date of shipment.

3.02 ON-SITE STORAGE

A. If equipment is to be stored for a period of time prior to installation, the Mechanical Contractor shall remove all stretch or shrink wrap from units upon receipt to prevent unit corrosion and shall either place the units in a controlled indoor environment or shall cover the units with canvas tarps and place them in a well-drained area. Covering units with plastic tarps shall not be acceptable.

3.03 FIELD EXAMINATION

A. The Mechanical Contractor shall verify that the mechanical room and/or roof are ready to receive work and the opening dimensions are as indicated on the shop drawings and contract documents.
B. The Mechanical Contractor shall verify that the proper power supply is available prior to starting of the fans.

3.04 INSTALLATION

A. The Mechanical Contractor shall be responsible to coordinate ALL of his installation requirements with the Owner and the Owner's selected Mechanical Contractor to ensure that a complete installation for each unit is being provided. Coordination efforts shall include such items as unloading and hoisting requirements, field wiring requirements, field piping requirements, field ductwork requirements, requirements for assembly of field-bolted or welded joints, and all other installation and assembly requirements.
B. The AHU manufacturer shall provide all screws and gaskets for joining of sections in the field.
C. The Mechanical Contractor shall verify that the following items have been completed prior to scheduling the AHU manufacturer's final inspection and start up:
1. All spring-isolated components have had their shipping restraints removed and the components have been leveled.
2. On all field-joined units, that all interconnections have been completed, i.e., electrical and control wiring, piping, casing joints, bolting, welding, etc.
3. All water and steam piping connections have been completed and hydrostatically tested and all water flow rates have been set in accordance with the capacities scheduled on the Drawings.
4. All ductwork connections have been completed and all ductwork has been pressure tested for its intended service.
5. All power wiring, including motor starters and disconnects, serving the unit has been completed.
6. All automatic temperature and safety controls have been completed.
7. All dampers are fully operational.
8. All shipping materials have been removed.
9. All (clean) filter media has been installed in the units.

3.05 LEVELING

A. The Mechanical Contractor shall level all unit sections in accordance with the unit manufacturer's instructions. The Mechanical Contractor shall provide and install all necessary permanent shim material to ensure individual sections and entire assembled units are level.

3.06 FINAL INSPECTION AND START UP SERVICE

A. After the Mechanical Contractor has provided all water and steam piping connections, ductwork connections, and field control wiring, and Electrical Contractor has provided all the field power wiring, the Mechanical Contractor shall inspect the installation. The Mechanical Contractor shall then perform startup of the equipment.
B. The Automatic Temperature Control (Building Direct Digital Control) Contractor

shall be scheduled to be at the job site at the time of the equipment start up.

C. The Mechanical Contractor, shall perform the following tests and services and submit a report outlining the results:

1. Record date, time, and person(s) performing service.
2. Lubricate all moving parts.
3. Check all motor and starter power lugs and tighten as required.
4. Verify all electrical power connections.
5. Conduct a start up inspection per the AHU manufacturer's recommendations.
6. Record fan motor voltage and amperage readings.
7. Check fan rotation and spin wheel to verify that rotation is free and does not rub or bind.
8. Check fan for excessive vibration.
9. Check V belt drive or coupling for proper alignment.
10. Check V belt drive for proper tension. Tighten the belts in accordance with the AHU manufacturer's directions. Check belt tension during the second and seventh day's operation and re-adjust belts, as may be required, to maintain proper tension as directed by the AHU manufacturer.
11. Remove all foreign loose material in ductwork leading to and from the fan and in the fan itself.
12. Disengage all shipping fasteners on vibration isolation equipment.
13. Check safety guards to insure they are properly secured.
14. Secure all access doors to the fan, the unit and the ductwork.
15. Switch electrical supply "on" and allow fan to reach full speed.
16. Physically check each fan at start up and shut down to insure no abnormal or problem conditions exist.
17. Check entering and leaving air temperatures (dry bulb and wet bulb) and simultaneously record entering and leaving chilled water temperatures and flow, steam pressures and flow, and outside air temperature.
18. Check all control sequences.

END OF SECTION 237413

SECTION 26 05 00 – COMMON WORK RESULTS FOR ELECTRICAL

PART 1 - GENERAL

Related Documents:

A. Drawings and general provisions of Contract, including General and Supplementary Conditions and Division-01 Specification sections, apply to work of this section.

Description of Work:

A. This section specified several categories of provisions for electrical work including:
   1. Certain adaptive expansions of requirements specified in Division 01,
   2. General performance requirements within the electrical systems as a whole, and,
   3. General work to be performed as electrical work, because of its close association.

Summary of Electrical Work:

A. Refer to the E-series drawings for graphic representations, schedules and notations showing electrical work.

B. Refer to the Division 26 sections for the primary technical specifications of electrical work.

Coordination of Electrical Work:

A. Refer to the Division 01 sections for general coordination requirements applicable to the entire work. It is recognized that the contract documents are diagrammatic in showing certain physical relationships which must be established within the electrical work, and in its interface with other work including utilities and mechanical work, and that such establishment is the exclusive responsibility of the Contractor.

B. Arrange electrical work in a neat, well organized manner with conduit and similar services running parallel with primary lines of the building construction and with a minimum of 7’0” o.c. where possible.

C. Locate operating and control equipment properly to provide easy access, and arrange entire electrical work with adequate access for operation and maintenance.

D. Advise other trades of openings required in their work for the subsequent move-in of large units of electrical work (equipment).

E. Contractor to identify all electrical circuits that serve the areas where no work will be performed and all existing exterior circuits so that they are re-connected to the corresponding panel.

Coordinating Drawings:

A. For locations where several elements of electrical (or combined mechanical and electrical) work must be sequenced and positioned with precision in order to fit into the available space, prepare

coordination drawings (shop drawings) showing the actual physical dimensions (at accurate scale) required for the installation if deemed necessary by Architect or Engineer. Prepare and submit these coordination drawings, if required, prior to purchase-fabrication-installation of any of these elements involved in the coordination.

B. The Drawings and these Specifications are complementary, each one to the other, and what is called for in one shall be as binding as if called for by both. Carefully examine the Drawings and Specifications and report any discrepancies affecting the work to the Architect. The Architect will issue such written instructions or interpretations as may be required.

C. The Electrical Plans are diagrammatic, but shall be followed as closely as actual construction and the work of the other trades will allow. Such minor changes as are necessary to make the electrical work conform to the work of other trades and to the building shall be made without cost to the Owner.

D. Circuits and feeders shall be as shown and no deviations from the indicated outlet-circuit grouping will be permitted, except by permission of the Architect. Branch circuit numbers are for guidance only and need not necessarily conform to the finished job. Actual circuit numbers used shall be recorded on "As-built" drawings.

E. The maximum number of circuits combined in one raceway shall be two. The circuits shown on the plan can be combined but must be shown on the 'AS BUILT' drawings.

Quality Assurance and Standards:

A. Refer to Division 01 for general administrative/procedural requirements related to compliance with codes and standards. Specifically, for the work (in addition to standards specified in individual work sections), the following standards are imposed, as applicable to the work in each instance:

AWS standards for welding
ANSI C 2, National Electrical Safety Code
ANSI C 73, Dimensions of Attachment Plugs and Receptacles
NECA standards for installation
NEMA standards for materials and products.

Laws, Codes and Ordinances:

A. All work and material shall conform to the requirements of O.S.H.A. and all National, and State Laws and ordinances having jurisdiction at the job site. The (N.E.C.) National Electrical Code 2011 Edition, or latest edition being enforced, shall be strictly adhered to; N.E.C. requirements are considered "minimum requirements". Where requirements of the Contract Documents exceed N.E.C., the Contract Document governs. This Contractor shall be licensed to work in the local area.

B. Specialty subcontractor (Fire Alarm, Security Systems, if applicable), shall be duly licensed by the State of Texas to sell, install and service Fire Alarm and Security Systems. All employees shall be duly registered and records maintained as required by applicable State of Texas laws. The Specialty Contractor shall submit a copy of his fire alarm and security systems license at the time of product submittal.

C. The latest A.D.A. requirements governing this project must be adhered to.

D. Secure permits and pay permit and inspection fee as required by local authorities.

E. Upon completion of the work, furnish to the Owner a certificate of final inspection and approval from the electrical inspection bureau having jurisdiction.

F. All electrical systems shall be grounded in strict accordance with the requirements of the National Electrical Code.

G. All electrical requirements must be coordinated with the local electric utility for temporary and permanent service.

Submittal:

A. Refer to the Division 01 for general requirements conceding work related and administrative submittal. All descriptive and technical data and shop drawings shall bear signed certification to the effect that they have been carefully examined and found to the correct with respect to dimension, space available, non-interference with other trades and that the equipment complies with all the requirements of these specifications. Where catalog data is submitted, the proposed items shall be clearly "flagged" or otherwise identified, so that no confusion exists. Without the above certification shop drawings and submittal will no be approved.

B. Reproduced copies of product data showing pictures of item to be submitted shall be clear, sharp and show product in detail. Reproduced copies where product picture is not clear or blurred will not be accepted.

C. Submittal shall be separated into the following categories.

(1) Lighting Fixtures and Lamps (2) Wiring Devices (3) Switchgear (including Switchboards, Panelboards and Motor Control Centers) (4) Motor/Circuit Disconnects and Transformers (6) Special Systems (including Fire Alarm, P.A., Program/Clock, and Intrusions Alarm), if applicable.

D. Each category shall be separately bound in booklet form; loose sheets or sheets merely stapled together without report/presentation cover or soft-cover will not be accepted.

E. Submittal which are not separated into the above mentioned categories and/or not appropriately bound will not be accepted.

Temporary Facilities:

A. Refer to the Division 01 sections for general requirements on temporary facilities. Except for self-contained facilities, connect and terminate electrical temporary facilities at the locations indicated or, if not otherwise indicated, at locations as determined by the Contractor to fulfill project requirements.

B. Do not interrupt or disrupt power service to existing facilities of the Owner or others, except with prearrangement and agreement on time of interruption as needed to make temporary connection for temporary power service.

C. Do not subject electrical facilities (either temporary work or temporary use of permanent work) to higher demand or loading than designed for. Where this conditions present, the electrical

subcontractor shall be responsible for obtaining temporary electrical power from the local electric utility. All charges for temporary service shall be borne by the General Contractor under his bid price. Location, size and type for service shall be compatible to job requirements.

D. When temporary electrical service is no longer needed for construction work, remove electrical temporary facilities and temporary provisions of all permanent electrical work. Repair and restore (or replace) work damaged by installation and operation of electrical systems which have been used to provide temporary services, to the condition of new and unused work except for normal wear.

E. Electrical work installed as temporary facilities shall, upon removal, remain property of the Installer.

F. Replace worn parts of permanent electrical work, where used as temporary facilities prior to the Owner's acceptance and assumed operation. Where lamps of permanent electrical light fixtures have been used for temporary lighting, replace lamps which have burned out or are noticeable dimmed by temporary use.

Products, Electrical Work:

A. Refer to Division 01 sections for general requirements on products, materials and equipment. The following provisions expand or modify the requirement as applicable to electrical work.

B. Prepare the product listing for electrical work, separate from the listing(s) of products for other work. Include listing of each significant item of equipment and material used in work; and indicate the generic name, product name, manufacturer, model number, and related specification section number(s). Material such as conductors, conduit and boxes taken from installer's stock need not be listed.

C. For principal equipment items, list the input/output ratings.

D. Submit list within 30 days of Contract Date.

E. All material shall be new and shall bear the label of the Underwriter's Laboratories, Inc., or be listed under reexamination service. All materials shall be of the best grade and latest pattern of manufacturer as specified. All work shall be performed in a neat, workmanlike manner and shall present a neat mechanical appearance when completed.

F. Provide products which are compatible with other products of the electrical work and with other work requiring interface with the electrical work, including electrical connections and control devices. For exposed electrical work, coordinate colors and finishes with other work.

Electrical Product Substitution:

A. Manufacturer's catalog numbers are specified for the purpose of establishing a standard. Substitutions for electrical equipment, will be permitted, if submitted in writing, 14 days prior to the Bidding Date, for approval by the Architect/Engineer, as being equal to, or better than, the specified items in every respect. Electrical equipment, devices, etc. may have substitutions only in equal appearance, quality and function to, or better than, the specified item. Complete descriptive and technical data shall be submitted on all proposed substitute items, together with the same data on the specified items. Material samples of the proposed substitute item and the specified items shall be submitted for comparison and test if requested by the Architect/Engineer.

B. All requests for substitution of equipment shall be made in writing to the Architect no less than 14 days prior to bidding date, by each individual bidder, with the certification that the "substitute item" is equal in appearance, quality and function or better than the specified item in every detail. The certification shall be signed by the individual holding the Master Electricians' License.

C. If notice of approval has NOT been published by the bid date, the request for substitution is disapproved.

PARTS 2 AND 3 - PRODUCTS AND EXECUTION

Electrical System Identification:

A. Provide engraved plastic laminated nameplates at locations of major units of electrical equipment including panelboards, control centers and similar systems. Additional and specific nameplate requirements appear in other Division 26 Sections.

Cutting and Patching:

A. Comply with the requirements of Division 01 for the cutting and patching of other work to accommodate the installation of electrical work. Except as individually authorized by the Architect/Engineer, cutting and patching of electrical work to accommodate the installation of other work not permitted.

B. Do not cut structural framing, walls, floors, decks and other members intended to withstand stress, except with the Architect's or Engineer's written authorization. Authorization will be granted only where there is no other reasonable method for completing the electrical work, and where the proposed cutting clearly does not materially weaken the structure.

C. Where patching is required to restore other work because of either cutting or other damage inflicted during the installation of electrical work, engage the original Installer to complete the patching of the other work. Restore the other work in every respect, including the elimination of visual defects in exposed finished, and judged by the Architect.

Excavating For Electrical Work:

A. The work of this article is defined to include whatever excavating and backfilling in the same area, including dewatering, flood protection provisions and other temporary facilities. Coordinate the work with other work in the same area, including other underground services (existing and new), landscape development, paving, and floor slab on grade. Coordinate with weather conditions and provide temporary facilities needed for protection and proper performance of excavating and backfilling.

Concrete for Electrical Work:

A. The work of this article is defined to include whatever concrete work in necessary or shown specifically to install the electrical work; but excluding equipment base grouting (see applicable Division 26 sections). Coordinate the work with other work, particularly other concrete work and accessories.

B. Except as otherwise indicated, comply with applicable provisions of Division 03 sections for electrical work concrete, including form work, reinforcement, mix design, materials (If not noted on drawings, use mix designs and materials accepted for Division 03 work where possible), admixtures, accessories (including water stops), placing of wet concrete, finishing, curing, protecting, testing, submittal and other requirements of the concrete work. Refer instances of uncertain applicability to the Architect/Engineer for resolution before proceeding.

Electrical Work Closeout:

A. Refer to the Division 01 sections for general closeout requirements. Upon completion of the work, the various systems operated under load conditions shall be tested for short circuits and grounds in accordance with the method and resistance values outlined in the National Electrical Code and for load balance on feeders and branch circuits.

B. The complete system shall operate satisfactorily in every respect. Make any repairs or adjustments necessary to this end to the satisfaction of the Architect/Engineer. Furnish all instruments and labor for testing

C. Coordinate closeout operations with closeout of mechanical systems and other power consuming equipment. Accurately record on "as-built" drawings locations of all conduits which are underground or otherwise concealed. Test run electrical equipment in coordination with test runs of mechanical system. Clean and lubricate operational equipment. Instruct Owner's operating personnel thoroughly in the operation, sequencing, maintenance and safety/emergency provision of the electrical systems. Turn over the operations to the Owner's personnel at the time(s) of substantial completion. Until the time of final acceptance of the total work of the Contract, respond promptly with consultation and services to assist the Owner's personnel with operation of the electrical systems.

D. It shall be the responsibility of this contractor to verify electrical characteristics and horsepower of mechanical equipment supplied at job site with that shown on Drawings. In the event that the Mechanical and/or Plumbing contractor furnish equipment of different horsepower and/or electrical characteristics from that shown on the Drawings, he shall pay ALL costs required to furnish the proper electrical facilities.

Notification of Discrepancies:

A. This Contractor shall study the Drawings and compare the layout of the electrical system, program and clock system, telephone system and integrated communication system to determine that:

1. The system covers the units and is required, from a functional, as well as a Code point of view. No area of coverage has been omitted.
2. The system has the appropriate conductors, pairs or cables in the appropriate raceway, connected to the end devices and interconnections to other systems has been shown. Raceway is of adequate size to contain conductors or cables.
3. The system apparatus required to perform the function has been specified.
4. Discrepancies in description of equipment or materials shown on the Drawings or described

in the Specifications are brought to the attention of the Architect/Engineer.

B. This Contractor shall notify the Architect/Engineer 14 WORKING DAYS prior to Bid Opening of any discrepancies he has found. In the event this Contractor fails to notify the Architect/Engineer, it will be assumed any and all discrepancies have been found by this Contractor and he has included sufficient money in his bid to correct them.

Guarantee:

A. The work to be performed shall be guaranteed for a period of one year after final acceptance against faulty workmanship and/or materials, and any failure or trouble due to such causes within the period of guarantee shall be made good upon demand of the Owner and without cost to the owner.

Miscellaneous Items:

A. Miscellaneous items not covered in these specifications shall be as indicated on the drawings, installed and connected in the proper method and as recommended by the manufacturer.

END OF SECTION 26 05 00

SECTION 26 05 03 - EQUIPMENT WIRING CONNECTIONS

PART 1 - GENERAL

Related Documents:

A. Drawings and general provisions of contract, including General and Supplementary Conditions and Division-01 Specification sections, apply to work of this section.

B. This section is a Division-26 basic Materials and Methods section, and is part of each Division-26 section making reference to electrical connections specified herein.

Description of Work:

A. Extent of electrical connections for equipment indicated by drawings and schedules. Electrical connections are hereby defined to include, but not necessarily be limited to, connections for providing electrical power to equipment.

B. Types of electrical connections specified in this section include the following:

To motors
To motor starters
From motor starters to motors
To lighting fixtures

C. Motor starters and controls not furnished integrally with equipment are specified in applicable Division-26 sections.

D. Refer to other Division-26 section for junction boxes and disconnect switches required for motors and other electrical units of equipment; not work of this section.

E. Temperature Controls for Heating, Ventilating and Air Conditioning shall be done under Division-23 Specifications.

F. Low voltage thermostat wiring shall be done under Division 23; this Contractor shall furnish empty conduit with pull string only.

G. High voltage (line) thermostat wiring shall be #12 THHN (if applicable), unless otherwise noted on Drawings. Number of conductors to each thermostat shall be as shown on Drawings; as indicated by number of hachure marks. Where no hachure marks are shown, a minimum of 2 conductors shall be assumed. This Contractor shall verify number of conductors required with Division 23 Specifications, Mechanical drawings, Mechanical schedules and equipment wiring diagrams.

Quality Assurance:

A. Comply with applicable portions of NEC as to type of products used and installation of electrical power connections (Terminals and splices), junction boxes, motor starters, and disconnect switches.

B. Comply with applicable portions of NEMA standards pertaining to electrical connections for

equipment.

C. Comply with applicable ANSI standards pertaining to products and installation of electrical connections.

D. Provide electrical connection products and materials which have been listed and labeled by the Underwriters Laboratories.

PART 2. PRODUCTS

Materials and Components:

A. For each electrical connection indicated, provide a complete assembly of materials, including but not necessarily limited to, pressure connectors, terminal (lugs), electrical insulating tape, electrical solder, electrical soldering flux, heat-shrinkable insulating tubing, cable ties, solderless wire nuts, and other items and accessories as need to complete splices and terminations of the type indicated.

Metal Conduit, Tubing and Fittings:

A. Provide metal conduit, tubing and fittings of the types, grades, sizes and weights (wall thicknesses) indicated for each type service. Where types and grades are not indicated, provide proper selection as determined by Installer to fulfill wiring requirements; comply with NEC requirements for raceways. Provide products complying with Division-26 basic materials and methods section "Electrical Raceways", and in accordance with the following listing of metal conduit, tubing and fittings.

Rigid non-metallic conduit
Rigid steel conduit
Rigid metal conduit fittings
Electrical metallic tubing
EMT fittings
Flexible metal conduit
Flexible metal conduit fittings
Liquid-tight flexible metal conduit
Liquid-tight flexible metal conduit fittings
PVC covered rigid metal conduit
PVC covered rigid metal conduit fittings

A. Provide full length pull wire in ALL empty conduits to facilitate the future installation of conductors.

Wire, Cable and Connectors:

A. Provide wires, cables and connectors complying with Division-26 basic materials and methods section "Wires and Cables".

B. Unless otherwise indicated, provide wires/conductors for electrical connections which match wires/ conductors of wiring supplying power.

C. Provide electrical connectors and terminals as recommended by connector and terminal manufacturer for intended application.

Electrical Connection Accessories

A. Provide electrical insulating tape, heat-shrinkable insulating tubing and bolts, solder, electrical soldering flux, wire nuts and cable ties as recommended for use by accessories manufacturers for type services indicated.

PART 3 EXECUTIONS

Installation of Electrical Connections:

A. Install electrical connections as indicated; in accordance with connector manufacturer's written instructions and with recognized industry practices, and complying with requirements of NEC and NECA's "Standard of Installation" to ensure that products fulfill requirements.

B. Connect electrical power supply conductors to equipment in accordance with equipment manufacturer's written instructions and wiring diagrams. Wherever possible, mate and match conductors of electrical connection for proper interface between electrical power supplies and installed equipment.

C. Cover splices with electrical insulation equivalent to, or of a higher rating than, insulation on the conductors being spliced.

D. Prepare cables and wires, by cutting and stripping covering, armor, jacket and insulation properly to ensure a uniform and neat appearance where cables and wires are terminated.

E. Trim cables and wires as short as practicable and arrange routing to facilitate inspection, testing and maintenance.

F. Tighten wire-binding connector screws firmly.

G. Provide liquid-tight flexible metal conduit for connection of all motors.

H. Coordinate insulation of electrical connections for equipment with equipment installation.

I. Perform all work in conformance with job requirements, other applicable sections of these specifications, governing Codes and ordinances, and manufacture's instructions.

J. If the Mechanical and/or Plumbing Contractor furnishes equipment with horsepowers or electrical characteristics different from that shown on the drawings, he shall pay all costs required to furnish the proper electrical facilities.

K. Motor starters and motor control devices that are not an integral part of the mechanical equipment will be turned over to this contractor for installation and connection.

Electrical Equipment Identification:

A. All items of mechanical and electrical equipment shall be identified by the attachment of engraved

nameplates constructed from laminated phenolic plastic, at least 3/64" thick, 3-ply, black surfaces and white core. Engraving shall be Roman Gothic, at least 3/8" high appropriately spaced.

B. Nameplates shall be attached by the use of #2 chromium plated, self-tapping, flat head Phillips screws, no rivets or adhesives. Nomenclature on the label shall include the name of the item, its make number, area, space, or equipment served, and other pertinent information. Equipment to be identified with nameplate shall include, but not be limited to, the following.

Air Conditioning Controls	Contractors
Individually Enclosed C.B.'s	Relays
Panelboards	Disconnect Switches
Motor Control Centers	Switchboards
Starters	Low Voltage Relay Panels

C. Nameplates for panelboards, motor control centers and switchboards shall be furnished and installed at factory by manufacturer of equipment. Refer to respective Division-26 sections for additional nameplate requirements.

D. Air washer and exhaust fan disconnect switches shall have engraved nameplates, screwed to the outside cover of disconnect, with mechanical designation and room number served by the unit, (i.e., "EF-1, GYM-101"). Room numbers shall be those finally selected by the Owner; not necessarily those shown on the Contract Documents.

E. Complete all identification cards (directories) for switches, starters, and other devices in all distribution, lighting and applicable panelboards and similar pieces of equipment, on a typewriter in a neat manner and insert the card in the card holder behind a piece of clear plastic. Where the card size is insufficient for the proper identification of all circuits, the index shall be made on a large sheet of paper of proper proportion, and then photo-reduced to fit the card holder.

F. Remote light switches and all control and equipment switches (i.e., exhaust fans, etc.) shall be identified by ENGRAVING the switchplate and NOT by micarta nameplate. Plates shall be stainless steel as hereinafter specified. Engraving shall be 3/16" Roman gothic, and shall be filled with black enamel. Nomenclature shall include the area, control, or equipment served.

END OF SECTION 26 05 03

SECTION 26 05 19 – LOW-VOLTAGE ELECTRICAL POWER CONDUCTORS AND CABLES

PART 1 - GENERAL

Related Documents:

A. Drawings and general provisions of Contract, including General and Supplementary Conditions and Division-01 Specifications sections apply to work of this section.

Description of Work:

A. The extent of electrical cable and electrical wire work is indicated by drawings and schedules.

B. The applications for cable, wire and connectors required on the project as follows:

Power and lighting distribution circuitry
Equipment connections and control circuitry
Fire Alarm System circuitry
Public Address circuitry
Program and Clock circuitry

Quality Assurance:

A. Comply with National Electrical Code (NFPA 70), latest edition, as applicable to construction and installation of electrical cable, wire and connectors.

B. Provide electrical cable, wire and connectors which have been listed and labeled by Underwriters Laboratories.

C. Comply with applicable portions of NEMA/Insulated Power Cable Engineers Association standards pertaining to materials, construction and testing wire cable.

D. Comply with applicable portions of ANSI/ASTM standards pertaining to construction of wire and cable.

E. Comply with applicable portions of IEEE standards pertaining to construction of wire and cable.

Submittal:

A. Submit manufacturer's data on electrical cable, wire and connectors when requested by the Engineer and/or Architect. Refer to Section 26 05 00 for additional requirement on product data submittal.

PART 2 PRODUCTS

Cable, Wire and Connectors:

A. Except as otherwise indicated, provide cable, wire and connectors of manufacturer standard materials, as indicated by published product information; designed and constructed as recommended by the manufacturer, and as required for the installation.

WIRE:

B. Provide factory-fabricated wire of the size, rating, materials and type as indicated for each service. Where not indicated, provide proper selection as determined by Installer to comply with installation requirements and with NEC Standards. Select from only the following types, materials, conductor configurations, insulations, and covering:

UL Type: THW
UL Type: THHN/THWN (dual rated)
UL Type: THWN

Material: Copper

Conductors: Solid (AWG 20 to 10 only)
Conductors: Concentric-lay-stranded (standard flexibility)

CABLE:

A. Provide factory-fabricated cable of sizes, ratings, materials and jacketing/sheating as indicated for each type service. Where not indicated, provide proper selection as determined by installer to comply with installation requirements and with NEC Standards.

B. Conductors #6 AWG and larger shall by type THW or THWN. Conductors #8 and smaller shall be type THHN/THWN. Except that #14 AWG for class 2 remote control and signal circuits may be commercial fixture wire type RF-2 or TF. Conductors shall be 98% conductivity, copper. Insulation types THW, THHN/THWN #2 AWG and smaller, for the purpose of this specification shall have a capacity of the same size wire with 60 degrees Celsius insulation.

C. All wire on this project shall be new, unused, in good condition and shall be delivered in standard coils, packages and reels. Samples of all wire shall be submitted by the Contractor when so requested by the Owner’s duly authorized representative for the purpose of determining acceptability of the wire. Wire which has been rejected by the Owner or Owner's representative shall not be used again. Such rejected wire shall be removed from the Owner's premises forthwith. Decision as to the quality of the wire furnished and the acceptance of such wire shall be made by the Owner's duly authorized representative.

D. No conductor smaller than #12 wires shall be used for lighting purposes. In the case of "homeruns", no conductor smaller than a #10 wire shall be used for runs over 50 feet in length on 120v circuits.

E. The sizing of all wire, except remote-control wire, shall be accomplished in the case of both feeder and branch circuits by conforming to the following provisions:

F. The voltage drop in the case of 120/208 volts shall not exceed 3.0% at maximum load and 80.0% power factor. Service and feeder shall not exceed 1.0% voltage drop at maximum load and 85% power factor, iron conduit only considered.

G. Conductors of #10 and smaller sizes of wire shall be solid members unless otherwise specifically called for on the plans. Conductors #8 and larger sizes of wire shall be stranded conductors unless otherwise specifically called for on the plans. The color of the wire shall be selected to

conform to all instances to the following table:

COLOR-PHASE TABLE FOR WIRE

208 VOLT SYSTEM		**480 VOLT SYSTEM**	
Neutral	White	Neutral	Grey
Phase A	Black	Phase A	Brown
Phase B	Red	Phase B	Orange
Phase C	Blue	Phase C	Yellow
Grounding Conductor - Green		Grounding Conductor - Green	

H. Should tape be used for color coding, it shall cover not less than 6" of conductor within enclosure wherever possible. Color coding shall be with tape such as that manufactured by the Minnesota Mining and Manufacturing Company for this purpose.

I. Remote-control wires, other than Class-2 Remote Control and Signal circuits, shall be no smaller than #14 conductors. Control wires shall be run in separate conduits.

J. Lighting fixtures shall not be used for raceways for circuit other than parallel wiring of fixtures.

K. When leaving a metal raceway or conduit in a cabinet, box, switch enclosure, control enclosure or any other like member, conductors shall be protected by means of insulated bushings or end fittings.

L. Conductors may be run in multiple size 1/0 to 500 MCM inclusive, provided all multiple conductors are the same size, length and type of insulation. Not more than three conductors may be run in multiple, and they shall be so arranged and terminated as to insure equal division of the total current between all conductors involved. Where multiple connections are contemplated, approval of the Owner's duly representative must be obtained before installation is made.

Connectors:

A. Provide factory-fabricated, metal compression type connectors of sizes, rating, materials, types and classes as indicated for each service. Where not indicated, provide proper selection as determined by Installer to comply with installation requirements and NEC standards. NO SET SCREW CONNECTORS OR COUPLINGS ALLOWED.

B. No splices or taps shall be made in any conductors except in outlet boxes, pullboxes, panelboard boxes, manholes, splice boxes or other exposed locations. All taps and splices shall be made with solderless connections and insulated in a manner providing an effective insulation equal to that of the adjoining wire. Any splice or tap shall be made only on such conductors as are a component part of a single circuit.

PART 3 EXECUTION

Installer:

A. Install electrical cables, wires and connectors as indicated, in compliance with the manufacturer's written instructions, applicable requirements of the NEC and NECA's "Standard of Installation", and in accordance with recognized industry practices.

B. Coordinate cable and wire installation work with electrical raceway and equipment installation work, as necessary for proper interface. Prior to pulling cables or conductors into raceways, inspect interiors of raceways; remove burrs, dirt and construction debris.

C. Pull conductors together where more than one is being installed in a raceway. Care shall be exercised while installing wire in conduits so as not to injure conductor insulation. Bending radius of insulated wire or cable shall not exceed manufacturer's recommended values.

D. Use pulling compound or lubricant, when necessary; compound must not deteriorate conductor and insulation, and shall be U.L. listed.

E. Use pulling means, including fish tape, cable or rope which can not damage the raceway. Maximum pulling tension of any wire or cable shall not exceed manufacturer's recommended values.

F. Keep conductor splices to a minimum. Splices shall not be permitted except in junction boxes, outlet boxes or as previously listed in this section. Splices must be accessible.

H. Install splices and taps which have mechanical strength and insulation rating equivalent-or-better than conductor.

I. Use splice and tap conductors which are compatible with the conductor material.

J. Provide nylon pull wire for every empty raceway to facilitate the future installation of wires.

Field Quality Control:

A. Prior to energization, test cable and wire for continuity of circuitry and also for short circuits. Correct malfunction when detected.

B. Subsequent to wire and cable hook-ups, energize circuitry and demonstrate functioning in accordance with requirements.

END OF SECTION 26 05 19

SECTION 26 05 33 – RACEWAY AND BOXES FOR ELECTRICAL SYSTEMS

PART 1 GENERAL

Related Documents:

A. Drawings and general provisions of Contract, including General and Supplementary Condition and Division-01 Specification Sections, apply to work of this section.

B. This section is a Division-26 Basic Materials and Methods Section, and is part of each Division-26 section making reference to electrical raceways specified herein.

Description of Work:

A. The extent of raceways is indicated by drawings and schedules.

B. The types of raceways in this section include the following:

Electrical metallic tubing
Flexible metal conduit
Intermediate metal conduit
Liquid-Tight flexible metal
Rigid metal conduit
Underground plastic utilities duct
Quality Assurance:

B. Comply with applicable portions of NEMA standards pertaining to raceways.

C. Comply with applicable portions of UL safety standards pertaining to electrical raceway systems; and provide products and components which have been UL-listed and labeled.

D. Comply with NEC requirements as applicable to construction and installation of raceway systems.

Submittal:

A. Submit manufacturer's data on electrical raceways when requested by Engineer and/or Architect. Refer to Section 26 05 00 for additional requirements of product data submittal.

Product Delivery, Storage and Handling:

A. Provide color-coded end cap thread protectors on exposed threads of metal conduit.

B. Handle conduit and tubing carefully to prevent bending and end-damage, and to avoid scoring finish.

C. Store pipe and tubing inside and protect from weather. When necessary to store outdoors, elevate well above grade and enclose with durable watertight wrapping.

PART 2 PRODUCTS

Materials and Components:

A. For each electrical raceway system indicated, provide assembly of conduit, tubing or duct and fittings including but not necessarily limited to connectors, couplings, offsets, elbows, strap, bushings, expansion joints, hangers and other components and accessories as needed for a complete system.

B. Each length of rigid conduit shall have both ends threaded. The extremities shall be reamed to remove all burrs and sharp edges. Each length of conduit shall be marked with the name and trademark of the manufacturer and the stamp of approval of the Underwriters Laboratories, Inc.

C. Each length of conduit shall be provided with one coupling attached and the threads of the end of the conduits having no coupling shall be protected by use of suitable thread protectors. All couplings and other fittings such as bends or elbows shall be protected against corrosion in the same manner in which the conduit itself is protected. All bends for conduit of 1-1/4" or larger shall either be factory manufactured elbows or be made by the use of a bending machine meeting the approval of the Owner's duly authorized representative. Under no circumstances shall any bend be installed if the conduit from which it is fabricated is injured in any manner in the course of, or by, the bending process. The radius of the curve of the inner edge of any field bend shall not be less than the recommendation of the National Electrical Code. Under no circumstances shall the internal cross section area of any conduit be appreciably reduced by any bending process.

D. EMT connectors and couplings shall be of the watertight threaded compression type, having steel gland nuts. Indenter or threadless type fittings are prohibited. NO SET SCREW CONNECTORS OR COUPLINGS ALLOWED.

E. Conduits 1/2" and 3/4" trade size may be installed in concrete slabs, or near to the center of the slab as possible.

F. Conduits installed in direct contact with the earth, except where PVC is indicated and/or specified shall be rigid galvanized steel, field spirally wrapped (half-lapped) with one layer of 1" wide 3M Scotchrap #50 plastic tape with a 50% overlap, including all joints or couplings, or shall be coated with a bonded, 20 mil minimum thickness PVC, permanently fused at the factory, Pittsburgh Standard Co., "Plasti-Bond", or approved equal. At Contractor's option PVC externally coated rigid steel conduit may be used without spiral wrap.

G. On all circuit conduits, 1/2" to 6", this contractor shall use O.S. Electrical Manufacturing Co. Type IBC-L-BC insulated conduit bushings for all conductors #6 and up where they enter or leave the cabinet box.

H. Where thin wall conduit is terminated into cabinet, junction box, outlet box, pull box, auxiliary gutter, etc., the conduit shall be secured with a nylon insulated throat compression type box connector. All thin wall conduit couplings shall be compression type only.

I. Ground clamps shall be provided on conduits stubbed up into the motor control center, panel board or switchboard and all conduits connected to the ground bus.

Metal Conduit, Tubing and Fittings:

A. Provide metal conduit, tubing and fittings of types, grades, sizes and weights (wall thickness) for each service indicated. Where types and grades are not indicated, provide proper selection determined by Installer to fulfill wiring requirements and comply with applicable portions of NEC for raceways.

B. Rigid Steel Conduit: FS WW-CO581 and ANSI C80.1.

C. Intermediate Steel Conduit: FS WW-C-581.

D. PVC Externally Coated Rigid Steel Conduit: ANSI C80.1 and NEMA std. Pub. No. RN 1.

E. Rigid Metal Conduit Fittings: FS W-F-408, types, kinds and styles as indicated.

F. EMT: FS WW-C 563 and ANSI C80.3.

G. EMT Fittings: FS W-F-408; types, classes and kinds as indicated.

H. Flexible Metal Conduit: FS WW-C-566, Type II, zinc coated steel. Aluminum, Type I, not acceptable.

I. Flexible Metal Conduit Fittings: FS WW-F-406; Types 1, Class 1

STYLE A

A. Liquid-tight Flexible Metal Conduit: Provide liquid-tight flexible metal conduit; constructed of single strip, flexible, continuous, interlocked and double-wrapped steel; galvanized inside and outside; coat with liquid-tight jacket of flexible polyvinyl chloride (PVC). SHALL NOT be used for outdoor installations.

B. Liquid-tight Flexible Metal Conduit Fittings: FS W-F-406; Type 1, Class 3, Style G.

C. Non-metallic Conduit, Ducts and Fittings:

D. Provide non-metallic conduit, ducts and fittings of types, sizes and weights (wall thicknesses) for each service allowed. Where types are not indicated, provide proper selection determined by the Installer to fulfill the wiring requirements and comply with applicable portions of NEC for raceways.

E. PVC Conduit and tubing Fittings: NEMA stds. No. TC 2 PVC Schedule 40 minimum.

F. Underground PVC Plastic Utilities Duct: Not Permitted.

G. Liquid-tight Flexible Nonmetallic Conduit: Not Permitted.

PART 3 EXECUTION

Installation:

A. Install electrical raceways where indicated, in accordance with manufacturer's written instruction, applicable requirements of NEC and NECA "Standard of Installation" and complying with

recognized industry practices.

B. Coordinate with other work including metal and concrete deck work, as necessary to interface installation of electrical raceways and components.

C. Conduit shall be provided for all wiring circuits as indicated. Material shall be exposed or concealed as required by the Drawings. Exposed conduit shall be run straight and true to building lines. All conduits shall be rigidly supported by means of straps or hangers best suited for work. If ceiling support system is adequate, one 3/4" maximum conduit may be supported by a Caddy clip to hanger wire. Multiple runs of conduits shall be racked on trapeze hangers. All support materials shall be rust-proof. Perforated tape or wire shall not be used. DO NOT USE WIRE TO SUPPORT OR ANCHOR ANY CONDUIT.

D. All ends of the conduit shall be properly reamed to remove rough edges and whenever a conduit enters a box or other fitting, it shall be securely fastened by the use of a locknut inside and outside of the box or fittings. An approve bushing shall be installed on the ends of all conduit in such a manner as to protect the wire from abrasion. The Contractor shall so lay out and install the conduit systems as to avoid all other services or systems, the proximity of which may prove injurious to the conduit or conductors which it confines. All conduit systems except those otherwise specifically shown to the contrary, shall be concealed in the building construction.

E. The contractor shall run all conduits in a manner satisfactory to the Owner's duly representative. On exposed systems, support shall be provided at intervals of 6 feet. On concealed circuits, support shall be provided at intervals of no more than 8 feet. No feeder conduit run shall be longer than 80 feet between junction boxes, cabinets or circuit interrupting devices unless there are no direction changes and only a straight-in-line pull of wire is involved. In such straight-in-line runs between junction boxes, cabinets or circuit interrupting devices, a run not to exceed 100 feet in length may be made.

F. Boxes shall be square and flush with finished surfaces and suitable anchored in place.

G. Conduit installation shall be in strict accordance with the NEC and best current practice. Conduit system shall be complete from pull to point to pull point before wire is pulled in it. Upon completion of installation of raceways, inspect interiors of raceways; remove burrs, dirt and construction debris.

H. Conduit crushed or otherwise deformed shall not be installed and shall be removed from the job site without delay.

I. Conduit runs shall be sealed after installation to prevent accumulation of water, dirt and other foreign materials. Conduit in which such accumulation of water, dirt and other foreign materials. Conduit in which such accumulation occurs shall be cleaned to the satisfaction of the Owner's representative or replaced.

J. Conduit crossing expansion joints shall be provided with suitable expansion fitting. Exposed conduits below the five (5) foot level shall be galvanized rigid conduit.

K. Conduits exposed on room or other exterior (outdoor) locations, not in direct contact with earth, shall be galvanized rigid steel or IMC.

L. EMT Steel tube may be used in sizes up to and including 2" in all interior work, except that it

SHALL NOT be used in concrete, underground, underfloor, in any damp or outdoor locations, or in any location where there is a likelihood of mechanical injury.

M. Provide liquid-tight flexible metal conduit for all motor connections. Liquid tight flexible metal conduit SHALL NOT be used for outdoor installations.

N. Flexible metal conduit shall be used ONLY for tap connections to lay-in lighting fixtures and in accordance with NEC Article 410-117 (c).

O. Conduits routed above the acoustical "lay-in" ceilings shall be anchored to the building structure and not on the ceiling. Wire shall not be used to anchor boxes to structure. Junction boxes shall be installed on the structural members. Flexible metal conduits extended down to light fixtures from junction boxes shall not exceed 6 ft. length and be in accordance with NEC Article 410-117 (c). Flexible metal conduit shall be strapped and/or supported such that it not lay atop acoustical lay-in ceiling tile.

P. The Contractor shall so lay out and install conduit runs as to avoid close proximity to hot water pipes. In no case shall a conduit be run within 3" of such pipes, except where crossings are unavoidable and then the conduit shall be kept at least 1" from the covering on the pipe crossed. Wherever possible, install horizontal raceway runs and above water and steam piping.

Q. The Contractor shall furnish and install a full length nylon pull cord in EVERY empty conduit installed hereunder to facilitate the future installation of wires. Identify each terminus of pull wire and linen tags and with complete information as to service and location of terminus of the cord.

R. Steel conduit may be embedded in concrete providing the outside diameter does not exceed 1/3 the thickness of the concrete lab, wall or beam is located entirely within the center third of the member and the lateral spacing of conduits is not less than 3 diameters.

S. Non-metallic conduit or duct may be used for underground branch circuits, underground feeders or underground service conduits only. Non-metallic conduit when installed outside of building foundation shall be buried 24" below ground. When non-metallic conduit is extended underneath building foundation concrete encasement is not required and conduit shall be buried 18" below foundation. BEFORE STUBBING UP, ADAPT TO GALVANIZED RIGID ELBOWS. Elbows shall be wrapped as indicated under MATERIALS AND COMPONENTS.

T. Non-metallic conduit is not permitted above grade or finished floor.

U. Contractor shall furnish and install a ground bonding conductor as required by NEC. This Contractor shall size the ground conductor as per NEC Art. 250 taking voltage drop into consideration. The addition of the grounding conductor may require an increase in conduit size and conduit fill shall be computed using the appropriate NEC tables. This Contractor shall submit recalculated branch, feeder or service conduit, taking the additional ground conductor into account, to the Engineer for approval.

V. All non-metallic conduit or duct runs, whether shown on the Drawings or not, shall have a ground bonding conductor, size as noted and/or as required by the NEC. The bond or equipment served shall be grounded to a grounding conductor to provide a good return path to service panel.

W. This contractor shall be responsible for sealing all new conduit penetrations, through new and

existing walls, ceiling or floors. The seal shall be acceptable to Architect/Engineer and maintain the integrity of the wall, ceiling or floor fire rating. 3M brand fire barrier caulk #CP-25 and putty #303 are considered acceptable for this purpose.

X. All roof penetrations shall be done using "portal-plus" pre-molded flexible boot flashing.

END OF SECTION 26 05 33

SECTION 26 05 34 - OUTLET, JUNCTION, AND PULL BOXES

PART 1 - GENERAL

Related Documents:

A. Drawings and general provisions of Contract, including General and Supplementary Conditions and Division-01 Specification sections, apply to work of this section.

B. This section is a Division-26 Basic Materials and Methods section, and is a part of each Division-26 section making reference to electrical wiring boxes and fittings specified herein.

Description of Work:

A. Extent of electrical box and electrical fitting work is indicated by drawings and in schedules.

B. The types of electrical box and electrical fitting work is indicated by drawings and in schedules.

C. The types of electrical boxes and fittings in this section include the following:

Outlet boxes
Junction boxes
Pullboxes
Conduit bodies
Bushings
Locknuts

Quality Assurance:

A. Comply with NEC as applicable to construction and installation of electrical boxes and fittings.

B. Provide electrical boxes and fittings which have been UL listed and labeled.

C. Comply with ANSI C134.1 (NEMA Standards Pub. No. OS 1) as applicable to sheet-steel outlets boxes, device boxes, covers and box supports.

PART 2 - PRODUCTS

Fabricated Materials:

A. Provide galvanized flat rolled sheet steel interior outlet wiring boxes of types, shapes and sizes including box depths to suit each respective location and installation; construct with stamped knockouts in back and sides and with threaded screw holes with corrosion-resistant screws for securing box covers and wiring devices.

B. Provide outlet box accessories as required for each installation, including mounting brackets, wallboard hangers, extension rings, fixture studs, cable clamps and metal straps for supporting outlet boxes which are compatible with outlet boxes being used and fulfilling requirements of individual wiring situations. Choice of accessories is Installer's option.

C. In standard partitions and suspended ceilings four inch octagonal boxes shall be 2-1/8" deep:

Appleton #40D1/2 (Universal 54171-1/2), 4" Oct. x 2-1/8" Deep, four 1/2" K.O.'s in sides, five 1/2" K.O.'s in top.

Appleton #40DSPL (Universal 54171 SPL), 4" oct. x 2-1/8" Deep, two 1/2" K.O.'s and two 3/4" K.O.'s in sides, three 1/2" K.O.'s and two 3/4" K.O.'s in top.

Appleton #40D3/4 (Universal 54171-3/4), 4" Oct. x 2-1/8" Deep four 3/4" K.O.'s in sides, three 1/2" K.O.'s and two 3/4" K.O.'s in top.

D. In standard partitions and suspended ceilings where conduits of greater size than 3/4" are employed boxes shall be 4" square, 1-1/2" deep:

Appleton #4SDI (Universal 53171-1) 4" Sq. x 2-1/8" Deep, Eight 1" K.O.'s in sides, three 1/2" & two 3/4" K.O.'s in top.

E. In thin partitions measuring 3-1/2" or less, boxes shall be 4" square, 1-1/2" deep:
Appleton #4S3/4 (Universal 5251-3/4), 4" sq. x 1-1/2" deep, Eight 3/4" K.O.'s in sides, three 2" and two 3/4" in top.

F. All wall or bracket outlets using octagon boxes shall be equipped with 3/8" no-bolt fixture stud.

G. Switch and outlet boxes shall use the same size boxes as specified above. Provide boxes with the appropriate covers and with required "raise" to finish flush with surface.

H. The following requirements shall apply to exposed as well as concealed conduit systems. When "gang" arrangements of outlets are employed 2-3/4" deep "gang" boxes shall be used. These "gang" boxes shall have dimensions which are not smaller than those shown in the following table.

NUMBER IN GANG	SIZE
3	4 - 1/2" x 8 -5/8"
4	4 - 1/2" x 10 -1/2"
5	4 - 1/2" x 12 -1/4"
6	4 - 1/2" x 14"
7	4 - 1/2" x 16"
8	4 - 1/2" x 17 -3/4"

I. Where "gang" boxes are located in woodwork or in wooden partitions, the depth of the boxes shall be reduced to 1 - 3/4".

J. Provide corrosion-resistant cast metal weatherproof outlet wiring boxes of types, shapes and sizes, including depth of boxes with threaded conduit ends, cast metal face plates with spring-hinged waterproof caps suitably configured for each application, including face plate gaskets and corrosion-resistant fasteners.

K. Provide galvanized code gauge sheet steel junction and pull boxes with screw-on covers; of types, shapes and sizes to suit each respective location and installation; with welded seams and equipped with stainless steel nuts, bolts, screws and washers. Outdoor pullboxes shall be cast iron NEMA 4.

L. Provide galvanized cast-metal conduit bodies of types, shapes and sizes, to suite respective locations and installation, construct with threaded-conduit-entrance ends, removable covers and corrosion-resistant screws.

M. Provide corrosion-resistant punched-steel box knockout closures, conduit locknuts, conduit bushings, and offset connectors of types and sizes to suit respective uses and/or installation. Provide conduit bushings and connectors as specified under Section 26 05 33 Raceway and boxes for Electrical System.

PART 3- EXECUTION

Installation of Boxes and Fittings:

A. Install electrical boxes and fittings where indicated, complying with manufacturer written instructions, applicable requirements of NEC and NECA's "Standard of Installation" and in compliance with recognized industry practices to ensure that products fulfill requirements.

B. Coordinate installation of electrical boxes and fittings with wire/cable and raceway installation work.

C. Special Systems Junction Boxes shall be painted in the following color scheme for easier identification during construction and inspections (if applicable):

Red - Fire Alarm System
Blue - P.A. System
Yellow - Program and clock System

D. Provide weatherproof outlets for interior and exterior locations exposed to weather or moisture. Provide knockout closures to cap unused knockout holes where blanks have been removed.

E. Install boxes and conduit bodies so as to ensure ready accessibility of electrical wiring. Avoid using round boxes where conduit must enter box through side of box which would result in difficult and insecure connections when fastened with locknut or bushing on rounded surface. Fasten boxes rigidly to substrates or structural surfaces to which attached or solidly embed electrical boxes in concrete or masonry. Wire shall not be used to anchor boxes to structure. Provide electrical connections for installed boxes.

END OF SECTION 26 05 34

SECTION 26 09 23 - LIGHTING CONTROL DEVICES - OCCUPANCY SENSORS

PART 1- GENERAL

WORK INCLUDED

A. Contractor's work to include all labor, materials, tools, appliances, control hardware, sensor, wire, junction boxes and equipment necessary for and incidental to the delivery, installation and furnishing of a completely operational occupancy sensor lighting control system, as described herein.

B. Contractor/Supplier shall examine all general specification provisions and drawings for related electrical work required as work under Division 26.

C. Contractor shall coordinate all work described in this section with all other applicable plans and specifications, including but not limited to wiring, conduit, fixtures, HVAC systems and building management systems.

D. The general provisions of the contract, including General and Supplementary conditions and General Requirements, apply to work specified in this section.

EQUIPMENT QUALIFICATION

A. Products supplied shall be from a single manufacturer that has been continuously involved in manufacturing of occupancy sensors for a minimum of five (5) years. Mixing of manufacturers shall not be allowed, unless approve by engineer.

B. All components shall be U.L listed, offer a five (5) year warranty and meet all state and local applicable code requirements.

C. Wall switch products must be capable of withstanding the effects of inrush current. Submittals shall clearly indicate the method used.

SYSTEM DESCRIPTION

A. The objective of this section is to ensure the proper installation of the occupancy sensor based lighting control system so that lighting is turned off automatically after reasonable time delay when a room or area is vacated by the last person to occupy said room or area.

B. The occupancy sensor based lighting control shall accommodate all conditions of space utilization and all irregular work hours and habits.

C. Contractor shall warrant all equipment furnished in accordance to this specification to be undamaged, free of defects in materials and workmanship, and in conformance with specifications. The supplier's obligation shall include repair or replacement, and testing without charge to the owner, all or any parts of equipment which are found to be damaged, defective or non-conforming and returned to the supplier The warranty shall commence upon the owner's acceptance of the project Warranty on labor shall be for a minimum period of one (1) year.

SUBMITIALS

A. Manufacturer shall substantiate conformance to this specification by supplying the necessary documents, performance data and wiring diagrams. Any deviations to this specification must be clearly stated by letter and submitted.

B. Submit a lighting plan clearly marked by manufacturer showing proper product, location and orientation of each sensor.

C. Submit any interconnection diagrams per major subsystem showing proper wiring.

D. Submit standard catalog literature which includes performance specifications indicating compliance to the specification.

E. Catalog sheets must clearly state any load restrictions when used with electronic ballasts.

SYSTEM OPERATION

A. It shall be the contractor's responsibility to make all proper adjustments to assure owner's satisfaction with the occupancy system.

PART 2 - SPECIFIC REQUIREMENTS

ACCEPTABLE MANUFACTURERS

A. Hubbell Building Automation
Wattstopper
Leviton

B. The listing of any manufacturer as "acceptable" does not imply automatic approval. It is the sole responsibility of the electrical contractor to ensure that any price quotations received and submittals made are for sensors which meet or exceed the specifications included herein.

PRODUCT SUBSTITUTION:

A. Manufacturer's catalog numbers are specified for the purpose of establishing a standard. Substitutions for electrical equipment, will be permitted, if submitted in writing, 14 days prior to the Bidding Date, for approval by the Architect/Engineer, as being equal to, or better than, the specified items in every respect. Occupancy sensors may have substitutions only in equal appearance, quality and function to, or better than, the specified item. Complete descriptive and technical data shall be submitted on all proposed substitute items, together with the same data on the specified items. Material samples of the proposed substitute item and the specified items shall be submitted for comparison and test if requested by the Architect/Engineer.

B. All requests for substitution of equipment shall be made in writing to the Architect no less than 14 days prior to bidding date, by each individual bidder, with the certification that the "substitute item" is equal in appearance, quality and function or better than the specified item in every detail. The certification shall be signed by the individual holding the Master Electricians' License.

C. If notice of approval has NOT been published by the bid date, the request for substitution is disapproved.

PRODUCTS

A. All products shall be Hubbell Building Automation product numbers:

1. Ceiling sensors: LO DT, OMNI DT 2000 BP1277, OMNI DT 1000 BP1277, OMNI DT 500 BP1277.
2. Wall switches sensors: LH MT D 2, LH MT S 1.
3. Power and Auxiliary Packs: UVPP

B. Wall switch sensors shall be capable of detection of occupancy of major motion up to 1000 square feet at 180-degree coverage area.

C. Wall switch sensors shall accommodate loads from 0 to 1,000 watts, fluorescent, at 120 volts; 0 to 1,800 watts, fluorescent, at 277 volts.

D. Wall switch products shall utilize Zero Arc Point Switching which increases relay life, protects from the effects of inrush current, and increases sensor's longevity.

E. Wall switch sensors shall have no leakage current to load, in manual or in Auto/Off mode for safety purposes and shall have voltage drop protection.

F. Wall switch sensors shall provide a field selectable option to convert sensor operation from automatic-ON to manual-ON.

H. Passive infrared sensors shall provide high immunity to false triggering from RFI (hand-held radios) and EM! (Electrical noise on the line).

J. Passive infrared sensors shall have a multiple segmented Fresnel lens, in a multipletier configuration, with grooves-in to eliminate dust and residue build-up.

K. Where specified, passive infrared ultrasonic and dual technology sensors shall offer daylighting footcandle adjustment control and be able to accommodate dual level lighting.

L. Dual technology sensors shall be wall mounted, corner mounted or ceiling mounted in such a way as to minimize coverage in unwanted areas.

M. Dual technology sensors shall consist of passive infrared and ultrasonic technologies for occupancy detection. Products that react to noise or ambient sound shall not be considered.

N. Ultrasonic sensors shall utilize self adjusting sensibility to adjust the detection threshold dynamically to compensate for constantly changing levels of activity and air flow throughout controlled space.

O. Ultrasonic operating frequency shall be crystal controlled at 25 kHz within ± 0.005% tolerance, 32 kHz within ± 0.002% tolerance, or 40 kHz ± 0.002% tolerance to assure reliable performance and eliminate sensor cross-talk. Sensors using multiple frequencies are not acceptable.

P. All sensors shall be capable of operating normally with LED drivers, electronic ballasts, PL lamp systems and rated motor loads.

Q. Coverage of sensors shall remain constant after sensitivity control has been set. No automatic reduction shall occur in coverage due to the cycling of air conditioner or heating fans.

R. All sensors shall have readily accessible, user adjustable settings for time delay and sensitivity. Settings shall be located on the sensor and shall be recessed to limit tampering.

S. In the event of failure, a bypass manual override shall be provided on each sensor. When bypass is utilized, lighting shall remain on constantly or control shall divert to a wall switch until sensor is replaced. This control shall be recessed to prevent tampering.

T. All sensors shall provide an LED as a visual means of indication at all times to verify that motion is being detected during both testing and normal operation.

PART 3 – EXECUTION

INSTALLATION

A. It shall be the contractor's responsibility to locate and aim sensors in the correct location required for complete and proper volumetric coverage within the range of coverage(s) of controlled areas per the manufacturer's recommendations. Rooms shall have hundred (100) percent coverage to completely cover the controlled area to accommodate all occupancy habits of single or multiple occupants at any location within the room(s). The locations and quantities of sensors shown on the drawings are diagrammatic and indicate only the rooms which are to be provided with sensors. The contractor shall provide additional sensors if required to properly and completely cover the respective room.

B. It is the contractor's responsibility to arrange a pre-installation meeting with manufacturer's factory authorized representative, at owner's facility, to verify placement of sensors and installation criteria.

C. Proper judgment must be exercised in executing the installation so as to ensure the best possible installation in the available space and to overcome local difficulties due to space limitations or interference of structural components. The contractor shall also provide, at the owner's facility, the training necessary to familiarize the owner's personnel with the operation, use, adjustment, and problem solving diagnosis of the occupancy sensing devices and systems.

FACTORY COMMISSIONING

A. Upon completion of the installation, the system shall be completely commissioned by the manufacturer's factory authorized technician who will verify all adjustments and sensor placement to ensure a trouble-free occupancy-based lighting control system. This service is provided at an additional cost.

B. The electrical contractor shall provide both the manufacturer and the electrical engineer with ten working days written notice of the scheduled commissioning date. Upon completion of the system fine tuning the factory authorized technician shall provide the proper training to the owner's personnel in the adjustment and maintenance of the sensors.

END OF SECTION 26 23 13

SECTION 26 22 13-LOW-VOLTAGE DISTRIBUTION TRANSFORMERS TP-1

PART 1 - GENERAL

1.1 SCOPE

A. Furnish and install TP-1 dry type isolation transformers of the types, sizes and quantities indicated on the contract drawings. Provide all lugs, accessories and mounting hardware necessary for proper installation and operation. Transformers manufactured after 2006 shall comply to the Federal Law 10 CFR Part 431 "Energy Efficiency Program for Certain Commercial and Industrial Equipment".

1.2 RELATED DOCUMENTS

A. All drawings and general provisions of the Contract, including General, Supplementary Conditions, special provisions and division 01 specification section, apply to this section.

1.3 SUBMITTALS

A. Provide product information prior to fabrication and installation. Product data shall include all dimensions, weights, electrical ratings, wiring diagrams and required clearances.

B. When requested, provide additional product data and certifications necessary to show conformance with this specification.

C. Provide information for record purposes including field test reports and maintenance data as required.

D. Refer to section 26 05 00 for general requirements on submittals.

1.4 RELATED STANDARDS

A. Provide transformers in accordance with the following standards, where applicable:
1. Underwriter’s Laboratory 1561, Standard for Safety for Dry-Type General Purpose and Power Transformers
2. Underwriter’s Laboratory 506, Standard for Safety for Specialty Transformers
3. NEMA ST 20, Dry Type Transformers for General Applications
4. NEMA 250, Enclosures for Electrical Equipment (1000 V Max)
5. NEMA TP1 (Guide for determining energy efficiency for distribution transformers)
6. NEMA TP2 (Standard test method for measuring the energy consumption of distribution transformers)
7. NEMA TP3 (Standard for the labeling of distribution transformer
8. ANSI / IEEE C57.12.91, Standard Test Code for Dry-Type Distribution and Power Transformers
9. NFPA 70, National Electrical Code
10. IEEE C2, National Electrical Safety Code

1.5 QUALITY ASSURANCE

A. Manufacturer shall have produced similar electrical equipment for a minimum period of 10 years.

B. Products shall be listed by Underwriters Laboratories, Inc.

1.6 DELIVERY, STORAGE AND HANDLING

A. Handle transformers in accordance manufacturer's recommendations. Utilize factory provisions for all lifting, rigging, or hoisting.

B. Store transformers prior to installation in a temperature and humidity controlled space. If such a space is not available, apply temporary heat in accordance with the manufacturer's instructions within each ventilated type transformer case to exclude moisture and condensation.

PART 2 - PRODUCTS

2.1 MANUFACTURERS

A. Approved manufacturers are as follows:
1. Siemens - Sentron
2. General Electric
3. Square D
4. Eaton

B. Transformers specified in this Section and power distribution equipment feeding and being fed by the transformers shall be warranted and serviced by the same manufacturer. Manufacturer shall have a local field service organization available on an as needed basis.

2.2 GENERAL REQUIREMENTS

A. Transformers shall be of the general purpose, self cooled, two winding, dry type designed for 60 Hz operation. Transformers shall be designed, manufactured and tested in accordance with the latest ANSI, NEMA and IEEE Standards and shall be listed and labeled in accordance with UL 1561 and NEMA TP 3.

B. Insulation System

1. Transformers 15 KVA and larger shall be of the ventilated type and have a UL recognized 220 °C insulation system. The temperature ratings shall be based on an allowable *150°C* winding temperature rise above a 30°C hot spot and 40°C ambient.
2. Transformer design KVA rating shall be suitable for a 30°C average, 40°C maximum ambient temperature.

C. Core And Coil

1. Core construction shall be of non-aging electrical grade grain-oriented silicon steel with high permeability, low hysteresis and low eddy current losses as needed to achieve the TP1 efficiency levels. Core laminations shall be tightly assembled and magnetic flux densities shall be kept well below the saturation point.
2. Core and coil designs shall be low loss type with minimum efficiencies per NEMA TP1 when operated at 35% of full load capacity. Efficiency shall be tested in accordance with

NEMA TP2 (Standard test method for measuring the energy consumption of distribution transformers).

Single Phase		Three Phase	
kVA	Efficiency	kVA	Efficiency
15	97.7%	15	97.0%
25	98.0%	30	97.5%
37.5	98.2%	45	97.7%
50	98.3%	75	98.0%
75	98.5%	112.5	98.2%
100	98.6%	150	98.3%
167	98.7%	225	98.5%
250	98.8%	300	98.6%
333	98.9%	500	98.7%
		750	98.8%

3. Windings shall be wound of high quality *copper*.
4. Ventilated of windings shall be accomplished by insulated spacers installed and arranged to brace coil layers and provide maximum ventilation. Core and coil assemblies shall be constructed to provide short circuit withstand capability as defined by ANSI and NEMA standards. The complete assembly shall be installed on vibration dampening pads to reduce noise and securely bolted to the enclosure base. A flexible grounding conductor shall be installed between the core and coil assembly and the transformer enclosure.
5. Core and coil sealing process:
   a. The complete core and coil assembly shall be impregnated with non-hydroscopic thermo-setting polyester varnish to provide a high dielectric and flame retardant seal.
   b. The shield of varnish to the coils shall effectively impregnate the entire core and coil assembly that results in a unit which is virtually impermeable to moisture, dust, dirt, salt air and other industrial contaminants and provide high dielectric seal.
6. Core lamination clamping angle shall be of adequate thickness and hardness to insure a tight and rigid core assembly to eliminate movement of core plates. Welded core designs shall include multiple beads as necessary to insure a tight and rigid core assembly to eliminate core plate movement.
7. Provide full capacity taps in the high-voltage windings as follows:
   a. 15 KVA through 500 KVA step-down transformers: 2 – 2½ % full capacity above normal and 4 – 2½ % full capacity below normal.
   b. 750 KVA and above step-down transformers: 2 – 2½ % full capacity above normal and 2 – 2½% full capacity below normal.
   c. Step-up and dual primary transformers: Provide NEMA standard taps.

D. Enclosures

1. Ventilated enclosures shall be of heavy gauge steel construction of NEMA 3R construction for outdoor use with the addition of weather shields and NEMA 1 for indoor installation. Front and rear covers shall be removable to provide access to terminal compartment(s). Terminals shall be fully sized to carry the transformer full load current and shall be arranged to accept UL listed cable connectors.
2. Enclosure wiring space and positioning of terminals shall allow for adequate cable bending space.
3. Finish enclosures in ANSI 61 gray paint.

4. Each transformer shall have a securely attached nameplate providing complete electrical ratings, wiring diagram, tap connections and catalog number, as applicable.

E. Sound

1. Unless otherwise specified, sound levels shall be in accordance with values allowed by NEMA ST-20.
2. If drawings request low noise rated transformer, transformer shall be minimum -3 decibels below values allowed by, NEMA ST-20.

F. Accessories

1. Provide weather shields for ventilated transformers installed outdoors conforming to the requirements of NEMA 250, Type 3R

PART 3 - EXECUTION

3.1 INSTALLATION

A. Install per manufacturer's recommendations and contract documents.

B. Install units plumb, level and rigid without distortion.

3.2 ADJUSTMENTS AND CLEANING

A. On completion of installation, inspect components. Remove paint splatters and other spots, dirt and debris. Repair scratches and mars on finish to match original finish. Clean components internally using methods and materials recommended by manufacturer.

B. Adjust transformer taps to provide optimum voltage conditions at utilization equipment throughout normal operating cycle of facility. Record primary and secondary voltages and tap settings and submit with test results.

3.3 TESTING

A. Include the following minimum inspections and tests according to manufacturer's written instructions. Comply with IEEE C57.12.91 for test methods and data correction factors.

B. Inspect accessible components for cleanliness, mechanical and electrical integrity and damage or deterioration. Verify that temporary shipping bracing has been removed. Include internal inspection through access panels and covers.

C. Inspect bolted electrical connections for tightness according to manufacturer's published torque values or, if not available, those specified in UL 486A and UL 486B.

3.4 WARRANTY

A. Equipment manufacturer warrants that all goods supplied are free of non-conformities in workmanship and materials for one year from date of initial operation, but not more than eighteen months from date of shipment.

END OF SECTION 26 22 13

SECTION 26 23 13 – DISCONNECT SWITCHES

PART 1- GENERAL

Related Documents

A. Drawings and general provisions of the Contract, including General and Supplementary Conditions and Division 01 Specification sections, apply to work of this section.

B. This section is a Division 26 Basic Materials and Methods section, and is part of each division 26 section making reference to motor and circuit disconnect switches specified

Description of Work:

A. The extent of motor and circuit disconnect switch work is indicated by drawings and schedules.

B. The types of motor and circuit disconnect switches in this section include the following:

1. Equipment disconnects
2. Appliance disconnects
3. Motor-circuit disconnects

Quality Assurance

A. NEC Compliance: Comply with NEC as applicable to construction and installation of electrical motor and circuit disconnect switches.

B. UL Compliance and Labeling: Provide motor and circuit disconnect switches which have been UL listed and labeled.

C. NEMA Compliance: Comply with applicable requirements of NEMA Std.

Submittals

A. Product data: Submit manufacturer's data including specifications, installation instructions and general recommendations for each type of motor and circuit disconnect switch required.

PART 2- PRODUCTS

Acceptable Manufacturers:

A. Manufacturer: Subject to compliance with requirements, provide products of one of the following (for each type of switch)

1. Cutler-Hammer, Inc.
2. General. Electric Co.
3. Square D Company
4. Siemens

B. No other manufacturer's products will be considered for installation on this project.

Fabricated Switches

A. General-Duty Disconnect Switches: GENERAL DUTY SWITCHES ARE NOT ACCEPTABLE ON THIS PROJECT. Only heavy duty switches shall be installed as specified in this section. General duty switches erroneously installed on job shall be replaced with heavy duty switches of type required wherever found.

B. Heavy-Duty Safety Switches: Provide surface-mounted, heavy-duty type, sheet steel enclosed safety switches, of the types, sizes, and electrical characteristics indicated; Fusible rated, rated for ampacity of circuit and system voltage as a minimum where noted on drawings. Switches shall be of pole configuration required for application with a solid neutral if needed; incorporating quick-make, quick-break type switches; so constructed that switch blades are visible in "OFF" position with door open. Equip with operating handle which is easily recognizable, and is padlockable in the “OFF" position; construct current carrying parts of positive pressure type reinforced fuse clips. Where noted on the contract documents, provide non-fuse disconnect switches of the same class construction listed above. All switches shall be provided with a ground lug.

C. Provide rain-tight switches for outside locations and where noted on the drawings, or where required by code enforcing authorities.

1. Fuses: Provide fuses for safety switches, noted on the drawings, or as recommended by the switch manufacturer, of classes, types, and ratings needed to fulfill electrical requirements for service indicated.

PART 3- EXECUTION

Installation of Motor Circuit Disconnect Switches

A. Install: Motor and circuit disconnect switches where indicated, complying with the manufacturer's written instructions, applicable requirements of NEC, NEMA and NECA's "Standard of Installation", and in accordance with recognized industry practices to ensure that products fulfill requirements.

B. Coordinate motor and circuit disconnect switch installation work with electrical raceway and cable work, as necessary for proper interface.

C. Install disconnect switches used with motor-driven appliances, and motors and controllers within sight of the controller position unless otherwise indicated.

Disconnect Identification

A. Provide nameplates on disconnect switches. Nameplates shall be two or three color laminated plastic, a minimum of 3/64" thick, so that letters will be white on black background. Engraving shall be Roman Gothic at least 3/8" high appropriately spaced.

B. Nameplates shall be secured to equipment with chromium plated self-tapping screws (no adhesives, no rivets).

C. Nameplate on disconnect shall give equipment designation and where disconnect is fed from. Example: “ACU-1” fed from panel ‘M’.

Field Quality Control

A. Testing: Subsequent to completion of installation of electrical disconnect switches, energize circuits and demonstrate capability and compliance with requirements. Except as otherwise indicated, do not test switches by operating them under load. However, demonstrate switch operation through six opening/closing cycles with circuit unloaded. Open each switch enclosure for inspection of interior, mechanical and electrical connections, fuse installation, and for verification of type and rating of fuses installed. Correct deficiencies then retest to demonstrate compliance. Remove and replace defective units with new units and retest.

END OF SECTION 26 23 13

SECTION 26 24 16 – PANELBOARDS

PART 1 - GENERAL

Related Documents:

A. Drawings and general provisions of Contract, including General, Supplementary conditions, Special Provisions and Division - 01 Specification Section, apply to work of this section.

B. This section is a Devision-26 Basic Materials and Methods Section, and is a part of each Division-26 Section making reference to panelboards specified herein.

Description of Work:

A. The extent of panelboard and enclosure work, including cabinets and cutout boxes is indicated by drawings and in schedules.

B. The types of panelboards and enclosures required for project include the following:

Power-distribution panelboards
Lighting and appliance panelboards

C. Refer to other Division-26 Sections for cable/wire, connectors and electrical raceway work required in conjunction with panelboards and enclosures, not work of this section.

Quality Assurance:

A. Comply with applicable UL safety standards pertaining to panelboards and accessories, and enclosures; provide units which have been UL listed and labeled.

B. Comply with NEC is applicable to installation of panelboards, cabinets, and cutout boxes.

C. Comply with NEMA Stds. Pub. No. 250, "Enclosures for Electrical Equipment (1000 volt maximum)" Pub. No. 1, "Panelboards", and installation portion of Pub. No.PB1.1, "Instructions for Safe Installation, Operation and Maintenance of Panelboards Rated 600 Volts or Less."

General:

A. Refer to Section 26 05 00 for general requirements on submittals.

Product Data:

A. Submit manufacturer's data including specifications, installation instructions and general recommendations, for each type of panelboard required. Include data substantiating that units comply with requirements.

B. Submit dimensioned drawings of panelboards and enclosures showing accurately scaled layout of enclosures and required individual panelboard devices, including but not necessarily limited to, circuit interrupters and accessories.

PART 2 - PRODUCTS:

Acceptable Manufacturers:

A. Subject to compliance with requirements, provide products of one of the following (for each type of panelboard and enclosure):

Siemens
Square D
General Electric Company
Eaton

Panelboards:

A. Panelboards shall be of domestic design and construction. Except as otherwise indicated, provide panelboards, enclosures and ancillary components of types, sizes, and rating indicated, which comply with manufacturer's standard materials, design and construction in accordance with published product information; equip with number of unit panelboard devices as required for complete installation. Where no more than one type of component meets indicated requirements, selection is Owner's option. Where types, sizes, or ratings are not indicated, comply with NEC, UL and established industry standards for applications indicated. Panelboard dimensions shall not exceed type panelboard specified on the Drawings and Schedules.

B. Provide dead-front safety type power distribution panelboards as indicated, with panelboard switching and protective devices in quantities, ratings, types, and with arrangement shown; with anti-turn solderless pressure type main lug connectors approved for copper conductors. Construct unit for connecting feeder at top orbottom of panel to suit job conditions. Equip with tin-plated aluminum bus bars and full-sized neutral bus; provide suitable lugs on neutral bus for outgoing feeders requiring neutral connections.

C. Provide molded-case main and branch circuit breaker types for each circuit, with toggle handles that indicate when tripped. Where multiple-pole breakers are indicated, provide with common trip so overload on one pole will trip all poles simultaneously. Provide a copper bare uninsulated grounding bar suitable for bolting to enclosure. Provide panelboards fabricated by same manufacturer as enclosures and which fit properly with enclosures. Main panelboards shall have UL Service Entrance Labels.

D. Provide dead-front safety type lighting and appliance panelboards as indicated with switching and protective devices in quantities, ratings, types and arrangement shown; with anti-burn solderless pressure type lug connectors approved for copper conductors; construct unit for connecting feeders at top or bottom of panel to suit job conditions; equip with tin-plated aluminum bus bars, fullsized neutral bar.

E. Provide molded case branch circuit breakers for each circuit, with toggle handles that indicate when tripped. Where multiple-pole circuit breakers are indicated, provide with common trip so overload on one pole will trip all poles simultaneously.

F. Provide suitable lug on neutral bus for each outgoing feeder required; provide a copper bare uninsulated ground bar suitable for bolting to enclosure; and provide panelboards fabricated by same manufacturer as enclosure, and which mate properly with enclosures. Where a lighting and appliance panelboard serves as a main panelboard, it shall have a UL Service Entrance Label.

G. Provide galvanized sheet steel cabinet type enclosures, in sixes and NEMA types as indicated, code-gage, minimum 16-gauge thickness. Construct with multiple knockouts and wiring gutters. Provide fronts with adjustable indicating trim clamps and doors with flush locks and keys, all panelboard enclosures keyed alike with concealed door covering. Provide baked gray enamel finish over a rus inhibitor. Design enclosure for surface or recessed mounting as required. Provide enclosures fabricated by same manufacturer as panelboards, and which fit properly with panelboards to be enclosed. Provide door-in-door construction as scheduled on the Drawings.

H. Panelboard widths, depths and heights, where applicable are limited to MAXIMUM sizes shown on schedules. Panelboards of greater width or depth and heights where applicable SHALL NOT be acceptable.

I. ALL panelboards shall have the following modifications:
1. Panelboard fronts (including doors and trim) shall be constructed of sheet metal steel on gauge higher than code gauge (10 gauge max.).
2. Front shall be of door-in-door construction with concealed hinges and trim clamps.
3. Panelboard trim and box shall be painted ANSI 61 at factory.

J. Provide molded case circuit breakers of types scheduled as specified herein. Circuit breakers shall be listed or recognized with Underwriters' Laboratories Inc. under standard Ul489, conform to applicable requirements of NEMA Standards Publication ABI-1975 and meet the appropriate classifications of Federal Specifications W-C-375b. Circuit breaker type, rating, and modifications shall be as indicated on the Drawings and/or schedules.

K. This contractor shall exchange, remove and install breakers rated 150A or less for a different breaker rating, or similar type, number of poles and interrupting rating, when required in the job, without cost to the Owner.

L. Provide screw cover junction boxed (S.C.J.B.) as required on contract documents and/or the NEC for pulling requirement. S.C.J.B.'S noted for special systems shall be of the NEMA type I, surface or flush mounting, as called for on the Drawings, minimum 16 gauge steel thickness as manufactured by Circle A-W Products or approved equal. Boxes shall be provide with a 3/4" plywood thick backboard sized for full area of box wall mounting surface. Furnish terminal blocks for all wire splicing or terminations, Kulka 672 or equal in quality and construction. Number of terminal blocks shall be as required for all wires in S.C.J.B.'s.

PART 3 - EXECUTION:

Installation of Panelboards:

A. Install panelboards and enclosures where indicated, in accordance with manufacturer's written instructions, applicable requirements of NEC and the NECA's "Standard of Installation" and in compliance with recognized practices to ensure that products fulfill requirements.

B. Coordinate installation of panelboards and enclosures with cable and raceway installation work.

C. Anchor enclosures firmly to walls and structural surfaces, ensuring that they are permanently and

mechanically secure.

D. Provide electrical connections within enclosures.

E. Provide 5" high x panelboard width x 12" depth concrete pad under each surface mounted panelboard for protection of branch circuit conduits rising from the floor up into panelboard.

Panelboard Directories:

A. Panelboards shall have neatly typed circuit directories behind clear plastic inserted in metal frame welded to door. Identify circuits by room numbers. Room numbers shall be those finally selected by the Owner; not necessarily those given on the Contract Documents.

B. "Spares" and "Spaces" shall be indicated with erasable pencil, printed using legible Gothic characters, not typed.

Panel Identification:

A. Panelboard nameplates shall be furnished by equipment manufacturer and installed at the factory. Nameplates shall be two or three color laminated plastic, a minimum of 3/64" thick, so that letters will be white on black background. Engraving shall be Roman Gothic at least 3/8" high appropriately spaced.

B. Nameplates shall be secured to equipment with chromium plated self-tapping screws (no adhesives, no rivets).

C. Electrical equipment to be identified includes: Distribution Panels, Panelboards, and individually enclosed circuit breakers.

D. Panelboard must be marked to indicate where the power supply source is located. Example: “Feeder Power Supply for Panel ‘A’ originates at Panel ‘MDP’.”

D. Nameplates on Panelboards shall give voltage characteristics, phase, number of wires, and where panel is fed from. Example: "Panel GLA, 120/280V, 3Ph, 4W, fed from panel ‘M’.”

END OF SECTION 26 24 16

SECTION 26 27 26- WIRING DEVICES

PART 1 - GENERAL

Related Documents:

A. The general provisions of the Contract, including General and Supplementary Conditions and General Requirements, apply to work specified in this section.

Description of Work:

A. The extent of wiring device work is indicated by drawings and schedules and by requirements of this section. Wiring devices are defined as single discrete units of electrical distribution systems which are intended to carry but not utilize electric energy.

B. The types of electrical wiring devices required for project include the following:

Receptacles
Switches
Wall Plates
Plugs
Connectors

Quality Assurance:

A. Provide products produced by one of the following (for each type of wiring device):

Pass & Seymour
Hubbell Inc.
Bryant Electric Co.
Arrow-Hart, Inc.
Crouse-Hinds Co.
General Electric Co.

B. Comply with National Electrical Code (NMPA No. 70) as applicable to construction and installation of electrical wiring devices.

C. Provide electrical wiring devices which have been tested, listed and labeled by Underwriters Laboratories.

UL 20 - Snap Switches
UL 498 - Plugs and Receptacles

D. Comply with National Electrical Manufacturers Association standards for general and specific purpose wiring devices.

Submittal:

E. Submit manufacturer's data on electrical wiring devices if asked for by engineer. Refer to Section 26 05 00 for additional requirements on product data submittal.

PART 2 - PRODUCTS

Fabricated Devices:

A. Provide factory-fabricated wiring devices in type, color and electrical rating for the service indicated. Where type and grade are not indicated, provide proper selection as determined by Installer to fulfill the wiring requirements and comply with NEC and NEMA standards for wiring devices.

Receptacles:

A. Configuration and requirements for all connector or outlet receptacles shall be in accordance with the NEMA Publication WD1. Fire resistant, non-absorptive, hot-welded, phenolic composition or equal bodies and based with metal plaster ears (integral with the supporting members). Single or duplex as shown or noted on the Drawings. Ivory color unless otherwise noted on the Drawings. Double grip contacts for each prong.

B. All receptacles shall be grounding type with a green colored hexagonal equipment ground screw of adequate size to accommodate an insulated grounding jumper (based on Table 250-95 of the NEC with minimum size No. 12 AWG). Ground terminals of all receptacles shall be internally connected to the receptacle mounting yoke.

C. Duplex convenience outlets, rated 20 amps, 125 volts, 2 pole, 3 wire NEMA 5-20R, back or side wiring, shall be Hubbell #5362-I, Pass & Seymour PS5362I, or approved equal.

D. Ground fault interrupter convenience outlet (GFI) shall be rated 20A, 125V, 2-pole, 3-wire, grounding, NEMA 5-20R, Hubbell GF20ILA, Pass & Seymour 2095I complete with stainless steel plate, Hubbell SS26. If weatherproof use Hubbell die cast aluminum weatherproof in-use cover model WP26E, or approved equal. Weatherproof outlets shall be GFI type as specified above, enclosed with appropriate weatherproof plate.

E. Isolated ground convenience outlets, rated 20 amps, 125 volts, 2 pole, 3 wire NEMA 5-20R, back or side wiring, shall be Hubbell IG5352-I, or approved equal.

Special Floor Outlets:

A. Special floor outlet shall be as specified on the Drawings. If not specified on drawings floor box shall be Legrand Wiremold EFB6 or equal with brass cover.

Switches:

A. Unless otherwise specified, each snap switch (flush tumbler-toggle) shall be of the AC general use type fully rated 20 amperes minimum at 120/277 volts, conforming to minimum requirements of the latest revision of the Underwriters Laboratories, Inc. UL 20, Fifth Edition Standard Snap Switches, NEMA stds. Pub. No. WD1 and further requirements herein specified. Specification grade, heavy duty single pole or 3-way of the maintained momentary or lock type as indicated on the Drawings. Switches shall operate in any position and shall be fully enclosed cup type with entire body of phenolic, urea or melamine. Fiber, paper or similar insulating material shall not be used for body or cover. Ivory color handles, unless otherwise indicated on the Drawings. Silver or silver allow contacts. AC 120/277 volt general use snap switches shall be capable of

withstanding tests as outlines in NEMA publication WD1 and shall be as follows or an Engineer approved equal, unless otherwise noted.

B. Single pole switches shall be Hubbell HBL1221-I, Pass & Seymour PS20AC1I, Bryant #4901-I, or approved equal.

C. Two pole switches shall be Hubbell HBL1222-I, Pass &Seymour PS20AC2I, Bryant #4902-I, or approved equal.

D. Three-way switches shall be Hubbell HBL1223-I, Pass & Seymour PS20AC3I, Bryant #4903-I, or approved equal in quality and function.

E. Four-way switches shall be Hubbell HBL1224-I, Pass & Seymour PS20AC4I, Bryant #4904-I, or approved equal in quality and function.

F. Single pole key operated, switches shall be corbin-lock type, Hubbell HBL1221RKL with SS12RKL plate, Pass & Seymour PS20AC1KL with SS717 plate, Bryant #4901RKL with SS12RKL plate, or approved equal in quality appearance and function.

G. Three-way key operated, switches shall be corbin-lock type, Hubbell HBL1223RKL with SS12RKL plate, Pass & Seymour PS20AC3KL with SS717 plate, Bryant #4903RKL with SS12RKL plate, or approved equal in quality appearance and function.

H. Single pole switch with pilot light, unless otherwise noted on Drawings, shall be spec. grade, red lighted handle, rated 20 amps, 120V, Hubbell HBL1221PL, Pass & Seymour PS20AC1RPL(120V) PS20AC1RPL7(277V), Bryant #4901PLR120 #4901PLR277, or approved equal in quality and function.

I. Single pole switch with green lighted handle, rated 20 amps, 120V, shall be Hubbell HBL1221PLG, or approved equal in quality and function.

J. Weatherproof switches shall include the type of snap switch indicated on the Drawings and specified herein, enclosed with a Crouse-Hinds #DS-181 cover and gasket mounted in an FS cast box.

K. Thermal switches controlling or disconnecting motor loads shall be G.E., or equal in quality and function, horsepower rated, approved for motor control service and shall be complete with overload devices of proper ratings.

L. Where thermal switches are combined with pilot lights, on 120V, pilot light shall be Hubbell #432 with #7298 red jewel.

Wiring Devices Accessories:

A. Wall plates-- Provide single switch, single and duplex outlet wall plates for wiring devices, with ganging and cutouts as indicated, provide with metal screw for securing plates to devices as noted below, screw heads colored to match finish of plates and wall plates possessing the following additional construction features:
Wet Locations: Receptacles in wet locations shall be installed with a hinged outlet cover/enclosure clearly marked “Suitable for Wet Locations While in Use” and “UL Listed”. There must be a gasket between the enclosure and the mounting surface, and between the hinged

cover and mounting plate/base to assure proper seal. Provide Taymac, Specification Grade, or approved equal.

B. Material and Finish: Device coverplates in finished areas where conduit is concealed shall be .035" nominal thickness, 18% chromium and 8% nickel, Sierra "S-N" line, type 302 stainless steel or equal. Devices coverplates, where conduit is exposed, shall be galvanized steel.

PART 3- EXECUTION

Inspection:

A. Installer must examine areas and conditions under which wiring devices are to be installed and notify Contractor in writing of conditions detrimental to proper and timely completion of the work. Do not proceed with the work until unsatisfactory condition has been corrected in a manner acceptable to the Installer.

B. It shall be the responsibility of the electrical contractor to determine from the architectural drawings and by actual determination on the site, the exact location of each and every outlet or switch. The outlet or switch locations shall be modified from those shown on the plans to accommodate changes in door swings or to clear other interferences that may arise from job construction details as well as modifications within room spaces.

C. These modifications shall be made with no change in contract price and shall be a matter of job coordination at the expense of the electrical contractor. The Contractor shall check these conditions throughout the entire job and shall notify the Architect/Engineer of discrepancies as they may occur before proceeding with the installation of the work to verify the modifications, if any.

Installation of Wiring Devices:

A. Install wiring devices where indicated, in accordance with manufacturer written instructions, applicable requirements of NEC and National Electrical Contractor Association's "Standard of Installation" and in accordance with recognized industry practices to ensure that products service intended function.

B. Delay installation of devices until wiring is completed.

C. Install receptacles and switches only in electrical boxes which are clean; free from excess building materials, debris, etc.

D. Adjacent switches shall be combines in one box.

E. Where switches control difference voltages (that is 120V and 277 V) place barriers in box to provide separation.

F. Switch plates where devices are ganged shall be one piece. Switches shall be mounted 48" and convenience outlets 18", center of box above the finished floor level except as otherwise specified on the Drawings. Align devices and plates horizontally and vertically.

G. Wall boxes shall be set in advance of the wall construction, shall be blocked in place and secured. All wall boxes shall be set flush with this finished building construction and the contractor shall

furnish and install extension sleeves as required to extend boxes to the finished surfaces of special furring.

H. The electrical contractor shall be responsible for coordinating with other trades the actual installation of his outlet boxes in walls. The wall building material (cinder block, brick, sheetrock or whatever) shall provide an even trim around outlet boxes not exceeding a 1/4" gap. The device cover plate should be able to cover up wall openings around outlet boxes. Whenever an outlet box installation fails to comply with the above listed condition, the electrical contractor shall arrange to have the problem corrected.

I. Caulking, spackling material or any other sealer used shall be kept out of the outlet box area.

J. Wiring device yokes shall be installed in physical contact with the plaster ring. Where the above contact cannot be obtained, a green covered bonding conductor shall be installed.

K. Device cover plates for each and every device shall be furnished and installed by this Contractor.

Protection of Wall Plates and Receptacles:

A. Upon installation of wall plates and receptacles, advise Contractor regarding proper and cautious use of convenience outlets. At time of Substantial Completion, replace those items which have been damaged, including those burned and scored by faulty plugs.

Testing:

A. Test wiring devices to ensure electrical continuity of grounding connections and after energizing circuitry, to demonstrate compliance with requirements.

END OF SECTION 26 27 26

SECTION 26 51 00 - INTERIOR LIGHTING

PART 1- GENERAL

Summary

A. Includes But Not Limited To
   1. Furnish and install lighting system as described in Contract Documents complete with lamps.

B. Related Sections
   1. Section 26 06 00 - Common Work Results for Electrical

PART 2- PRODUCTS

Equipment

A. Lighting Fixtures - See Fixture Schedule on Drawings.
   1. Approved Manufacturers-
      1) Columbia
      2) Hubbell
      3) Prescolite
      4) Kim
      5) Cree
      6) Lithonia

B. Fluorescent Ballasts

   2. Electronic solid state for 265mA, T5 lamps
      a. UL listed and labeled.
      b. Minimum power factor of 90 percent
      c. Maximum total harmonic distortion of 20 percent.
      d. Operation of lamps at normal light output and in compliance with Lamp Manufacturer's recommendations.
      e. Audible noise level lower than quietest CBM certified ballast for same application.
      f. Transient protection in accordance with ANSI 62.41-1984.
      g. Comply with FCC Rules Part 18, 15J.
      h. Maximum crest factor of 1.7.
      i. Five year full replacement warranty including labor allowance for replacement.
      j. Ballast voltage to match system voltage.
      k. Fluorescent lamps shall be 3500K color temperature.
      k. Approved Manufacturers -
         1) Advance
         2) Magnetek/Triad
         3) Motorola
         4) Osram Sylvania

C. Lamps
   1. Approved Manufacturers -
      a. Osram Sylvania

b. General Electric
c. North American Philips

D. LED Light Fixtures
1. Minimum CRI rating of 90.
2. Minimum lumens per watt of 90.
3. LED's to be 4000K color temperature.

PART 3- EXECUTION

Installation

A. Interface with Other Work.
1. Coordinate with Sections 09100 and 09500 to obtain symmetrical arrangement of fixtures in acoustic tile ceiling.
2. Coordinate with Section 09900 to ensure that light coves are properly painted before installation of light fixtures.

B. Securely mount fixtures. Support fixtures weighing 50 lbs or more, especially those mounted in high ceiling areas such as Cultural Center and Chapel, from building framing or structural members.

C. Fasten lay-in fluorescent fixtures to ceiling suspension system on each side with bolts, screws, rivets, or clips. In addition, connect lay-in fixtures weighing less than 50 lbs with two wire hangers minimum to building framing or structural members. Connect wires to opposing corners of fixture and may be slightly slack. Make final conduit connections to lay-in fluorescent fixtures with specified flexible conduit or flexible fixture whips.

D. Where fluorescent fixtures are shown installed end to end, provide suitable connectors or collars to connect adjoining units to appear as a continuous unit.

E. Where recessed fixtures are to be installed, provide openings, plaster rings, etc, of exact dimensions for such fixtures to be inserted in openings. Terminate circuits for recessed fixtures in an extension outlet box near fixture and connect with specified flexible conduit. Where installed on canopies, contractor must ensure recessed fixtures will fit within the canopy space.

F. Where pendant mounted light fixtures are to be installed, provide 5/8" threaded rods to support light fixture, if adjustable air craft cable is not called out for on plans.

G. Contractor must clean light fixtures of dust, dirt, and debris accumulated during construction before turning over building to owner. Replace lamps not working or broken during construction.

END OF SECTION 26 51 00

SECTION 26 56 00 – EXTERIOR LIGHTING

PART 1- GENERAL

Summary

A. Includes But Not Limited To
   1. Furnish and install exterior lighting system as described in Contract Documents including concrete bases for light poles.

B. Related Sections
   1. Section 26 06 00 - Common Work Results for Electrical

PART 2- PRODUCTS

Equipment

A. Lighting Fixtures- See Fixture Schedule on Drawings.
   1. Approved Manufacturers-
      a. Hubbell Outdoor Lighting
      b. Spaulding Lighting
      c. Kim Lighting
      d. Cree
      e. Architectural Area Lighting

B. Parking Area Poles
   1. Designed for wind loading required for project location.
   2. Steel reinforced concrete with prestressing to meet wind loading requirements. Provide #6 rebar in concrete in vertical and horizontal.
   3. Anchor base type with matching anchor bolt cover secured to base.
   4. Include handhole with cover at pole base.
   5. Finish & Color -
      a. Natural exposed aggregate finish with clear acrylic coating.
      b. Color as shown on drawings. If color is not specified verify color with architect.
   6. Approved Manufacturers
      a. Spaulding Lighting
      b. Kim Lighting
      c. Architectural Area Lighting
      d. Cree

C. Conduit
   1. Type PVC as specified in Section 26 05 33.
   2. Do not use direct burial cable.

D. Exterior Lighting Control
   1. Time Switch
      a. Standard 24 hour, 7 day programmable, electronic time switch, 120/277 volts
      b. Approved Manufacturers -
         1) Intermatic

2) Tork
3) Paragon

2. Photo Cell
   a. 120 volts.
   b. Approved Manufacturers -
      1) Intermatic
      2) Tork
      3) Paragon
3. Lighting Contactor
   a. 120 volt coil, 20 amps, NEMA 1 enclosure.
   b. Can be same manufacturer as main panelboard.
   c. Approved Manufacturers -
      1) Cutler Hammer
      2) General Electric
      3) Siemens
      4) Square D

PART 3 - EXECUTION

Installation

A. Interface With Other Work - Coordinate location of anchor bolts and conduit in concrete bases so pole is properly mounted and centered on base. Verify exact anchor bolts required and installation with manufacturer.

B. Install time switch and contactor inside building to control parking area and exterior building lighting. Program time switch with schedule provided by owner. Coordinate with owner for schedule preferences.

C. Locate photo cell outside building on roof and away from any light source and direct sunlight. Wire photo cell and time switch in series to control lighting contactor for photo cell ON, Time switch OFF operation.

D. If hinged light pole bases are used, install to Miss Major landscaping elements and permanent obstructions when lowered.

E. Contractor must follow manufacturer's recommendations when installing the bases for exterior pole or ground fixtures.

F. Exterior recessed fixtures must be provided with clear lens to protect lamp from dirt and debris.

END OF SECTION 26 56 00

SECTION 266270 – EMERGENCY GENERATOR SET – NAT GAS

Part 1. GENERAL

1.01 Scope

A. Provide complete factory assembled generator set equipment with digital (microprocessor-based) electronic controls.

B. Provide factory test, startup by a supplier authorized by the manufacturer, and on-site testing of the system.

C. The generator set manufacturer shall warrant all equipment provided under this section, whether or not is manufactured by the generator set manufacturer, so that there is one source for warranty and product service. Technicians specifically trained and certified by the manufacturer to support the product and employed by the generator set supplier shall service the generator sets.

1.02 Codes and Standards

A. The generator set installation and on-site testing shall conform to the requirements of the following codes and standards, as applicable. The generator set shall include necessary features to meet the requirements of these standards.
1. CSA 282, 2004 Emergency Electrical Power Supply for Buildings
2. IEEE446 – Recommended Practice for Emergency and Standby Power Systems for Commercial and Industrial Applications
3. NFPA37 –
4. NFPA70 – National Electrical Code. Equipment shall be suitable for use in systems in compliance to Article 700, 701, and 702.
5. NFPA99 – Essential Electrical Systems for Health Care Facilities
6. NFPA110 – Emergency and Standby Power Systems. The generator set shall meet all requirements for Level 1 systems. Level 1prototype tests required by this standard shall have been performed on a complete and functional unit, component level type tests will not substitute for this requirement.

B. The generator set and supplied accessories shall meet the requirements of the following standards:
1. NEMA MG1-2004 part 32. Alternator shall comply with the requirements of this standard.
2. UL1236 – Battery Chargers.

C. The control system for the generator set shall comply with the following requirements.
1. CSA C22.2, No. 14 – M91 Industrial Control Equipment.
2. EN50082-2, Electromagnetic Compatibility – Generic Immunity Requirements, Part 2: Industrial.
3. EN55011, Limits and Methods of Measurement of Radio Interference Characteristics of Industrial, Scientific and Medical Equipment.
4. FCC Part 15, Subpart B.
5. IEC8528 part 4. Control Systems for Generator Sets
6. IEC Std 801.2, 801.3, and 801.5 for susceptibility, conducted, and radiated electromagnetic emissions.
7. UL508. The entire control system of the generator set shall be UL508 listed and labeled.

1.03 Acceptable Manufacturers

A. Only approved bidders shall supply equipment provided under this contract. Equipment specifications for this project are based on microprocessor-based generator sets manufactured by Cummins Power Generation. Equipment by other suppliers that meets the requirement of this specification are acceptable, if approved not less than 2 weeks before scheduled bid date. Proposals must include a line by line compliance statement based on this specification.

Part 2. PRODUCTS

2.01 Generator set

A. Ratings

1. The generator set shall operate at 1800 rpm and at a voltage of: 480 Volts AC, Three phase, 4-wire, 60 hertz.
2. The generator set shall be rated at 200 kW, 250 kVA at 0.8 PF, based on site conditions of: Altitude 4000 ft., ambient temperatures up to 100 degrees F.
3. The generator set rating shall be based on emergency/standby service.

B. Performance

1. Voltage regulation shall be plus or minus 0.5 percent for any constant load between no load and rated load for both parallel and non-parallel applications. Random voltage variation with any steady load from no load to full load shall not exceed plus or minus 0.5 percent.
2. Frequency regulation shall be isochronous from steady state no load to steady state rated load. Random frequency variation with any steady load from no load to full load shall not exceed plus or minus 0.25%.
3. The engine-generator set shall be capable of single step load pick up of 100% nameplate kW and power factor, less applicable derating factors, with the engine-generator set at operating temperature.
4. Motor starting capability shall be a minimum of 1000 kVA. The generator set shall be capable of sustaining a minimum of 90% of rated no load voltage with the specified kVA load at near zero power factor applied to the generator set.
5. The alternator shall produce a clean AC voltage waveform, with not more than 5% total harmonic distortion at full linear load, when measured from line to neutral, and with not more than 3% in any single harmonic. Telephone influence factor shall be less than 50.

C. Construction

1. The engine-generator set shall be mounted on a heavy-duty steel base to maintain alignment between components. The base shall incorporate a battery tray with hold-down clamps within the rails
2. All switches, lamps, and meters in the control system shall be oil-tight and dust-tight, and the enclosure door shall be gasketed. There shall be no exposed points in the control (with the door open) that operate in excess of 50 volts.

D. Connections

1. The generator set load connections shall be composed of silver or tin plated copper bus bars, drilled to accept mechanical or compression terminations of the number and type as shown on the

drawings. Sufficient lug space shall be provided for use with cables of the number and size as shown on the drawings.

2. Power connections to auxiliary devices shall be made at the devices, with required protection located at a wall-mounted common distribution panel.

3. Generator set control interfaces to other system components shall be made on a common, permanently labeled terminal block assembly.

2.02 Engine and Engine Equipment

A. The engine shall be natural gas fueled, radiator and fan cooled. Minimum displacement shall be 855 cubic inches, with 6 cylinders. The horsepower rating of the engine at it's minimum tolerance level shall be sufficient to drive the alternator and all connected accessories. Engine accessories and features shall include:

B. Complete engine fuel system, including all pressure regulators, strainers, and control valves. The fuel system shall be plumbed to the generator set skid for ease of site connections to the generator set.

C. An electronic governor system shall provide automatic isochronous frequency regulation. The governing system dynamic capabilities shall be controlled as a function of engine coolant temperature to provide fast, stable operation at varying engine operating temperature conditions. The control system shall actively control the fuel rate and excitation as appropriate to the state of the generator set. Fuel rate shall be regulated as a function of starting, accelerating to start disconnects speed, accelerating to rated speed, and operating in various isochronous or parallel states.

D. Skid-mounted radiator and cooling system rated for full load operation in 104 degrees F (40 degrees C) ambient as measured at the generator air inlet, based on 0.5 in H_2O external static head. Radiator shall be sized based on a core temperature that is 20F higher than the rated operation temperature, or prototype tested to verify cooling performance of the engine/radiator/fan operation in a controlled environment. Radiator shall be provided with a duct adapter flange. The equipment manufacturer shall fill the cooling system with a 50/50-ethylene glycol/water mixture. Rotating parts shall be guarded against accidental contact.

E. Electric starter(s) capable of three complete cranking cycles without overheating.

F. Positive displacement, mechanical, full pressure, lubrication oil pump.

G. Full flow lubrication oil filters with replaceable spin-on canister elements and dipstick oil level indicator.

H. Replaceable dry element air cleaner with restriction indicator.

I. Flexible fuel lines.

J. Engine mounted battery charging alternator, 40-ampere minimum, and solid-state voltage regulator.

K. Coolant heater.

1. Engine mounted, thermostatically controlled, coolant heater(s) for each engine. Heater voltage shall be as shown on the project drawings. The coolant heater shall be UL499 listed and labeled.

2. The coolant heater shall be installed on the engine with high temperature silicone hose connections. Steel tubing shall be used for connections into the engine coolant system wherever the length of pipe run exceeds 12 inches. The coolant heater installation shall be specifically designed to provide proper venting of the system. The coolants heaters shall be installed using quick disconnect couplers to isolate the heater for replacement of the heater element. The quick disconnect/automatic sealing couplers shall allow the heater element to be replaced without draining the engine cooling system or significant coolant loss.
3. The coolant heater shall be provided with a 24VDC thermostat, installed at the engine thermostat housing. An AC power connection box shall be provided for a single AC power connection to the coolant heater system.
4. The coolant heater(s) shall be sized as recommended by the engine manufacturer to warm the engine to a minimum of 100F (40C) in a 40F ambient, in compliance with NFPA110 requirements, or the temperature required for starting and load pickup requirements of this specification.

L. Provide vibration isolators, spring/pad type or as recommended by the manufacturer, quantity as recommended by the generator set manufacturer. Isolators shall include seismic restraints if required by site location.

M. Starting and Control Batteries shall be calcium/lead antimony type, 24 volt DC, sized as recommended by the engine manufacturer, complete with battery cables and connectors.

N. Provide exhaust silencer(s) for each engine of size and type as recommended by the generator set manufacturer and approved by the engine manufacturer. The mufflers shall be critical grade. Exhaust system shall be installed according to the engine manufacturer's recommendations and applicable codes and standards.

O. Provide a minimum 12 amp battery charger for each generator set battery bank. Generator sets incorporating two battery banks shall be provided with two chargers connected together and operating in parallel, with alarm output(s) connected in parallel. The charger(s) shall include the following capabilities:

1. Chargers shall be UL 1236-BBHH listed and CSA or CUL certified for use in emergency applications.
2. The charger shall be compliant with UL991 requirements for vibration resistance.
3. The charger shall comply with the requirements of EN61000-4-5 for voltage surge resistance; EN50082-2 for immunity; EN61000-4-2 for ESD; EN61000-4-3 for radiated immunity; ANSI/IEEE C62.41 category B and IN61000-4-4 for electrically fast transient; EN61000-4-6 for conducted emissions; and FCC Part 15 Class A for radiated emissions.
4. The charger shall be capable of charging a fully discharged battery without damage to the charger. It shall be capable of returning a fully discharged battery to fully charged condition within 24 hours. The charger shall be UL-labeled with the maximum battery amp-hour rating that can be recharged within 24 hours.
5. The charger shall incorporate a 4-state charging algorithm, to provide trickle charge rate to restore fully discharged batteries, a bulk charge rate to provide fastest possible recharge after normal discharge, an absorption state to return the battery to 100 percent of charge, and a float stage to maintain a fully charge battery and supply battery loads when the generator set is not operating. In addition, the charger shall include an equalization timer. Charge rates shall be temperature compensated based on the temperature directly sensed at the battery.
6. The DC output voltage regulation shall be within plus or minus 1%. The DC output ripple current shall not exceed 1 amp at rated output current level.
7. The charger shall include the following features:

a) two line alphanumeric display with programming keys to allow display of DC output ammeter and voltmeters (5% accuracy or better), display alarm messages, and perform programming;
b) LED indicating lamp(s) to indicating normal charging condition (green), equalize charge state (amber), and fault condition (red);
c) AC input overcurrent, over voltage, and undervoltage protection;
d) DC output overcurrent protection;
e) Alarm output relay
f) Corrosion resistant aluminum enclosure

2.03 AC Generator

A. The AC generator shall be; synchronous, four pole, 2/3 pitch, revolving field, drip-proof construction, single prelubricated sealed bearing, air cooled by a direct drive centrifugal blower fan, and directly connected to the engine with flexible drive disc. All insulation system components shall meet NEMA MG1 temperature limits for Class H insulation system. Actual temperature rise measured by resistance method at full load shall not exceed 105 degrees Centigrade.

B. The generator shall be capable of delivering rated output (kVA) at rated frequency and power factor, at any voltage not more than 5 percent above or below rated voltage.

C. A permanent magnet generator (PMG) shall be included to provide a reliable source of excitation power for optimum motor starting and short circuit performance. The PMG and controls shall be capable of sustaining and regulating current supplied to a single phase or three phase fault at approximately 300% of rated current for not more than 10 seconds.

D. The subtransient reactance of the alternator shall not exceed 15 percent, based on the standby rating of the generator set.

E. The alternator shall be capable of operation with reverse kVAR of 0.15 per unit.

2.04 Generator Set Control.

A. The generator set shall be provided with a microprocessor-based control system that is designed to provide automatic starting, monitoring, and control functions for the generator set. The control system shall also be designed to allow local monitoring and control of the generator set, and remote monitoring and control as described in this specification. The control shall be mounted on the generator set, or may be mounted in a free-standing panel next to the generator set if adequate space and accessibility is available. The control shall be vibration isolated and prototype tested to verify the durability of all components in the system under the vibration conditions encountered.

The generator set mounted control shall include the following features and functions:

B. Control Switches

1. Mode Select Switch. The mode select switch shall initiate the following control modes. When in the RUN or MANUAL position the generator set shall start, and accelerate to rated speed and voltage as directed by the operator. A separate push-button to initiate starting is acceptable. In the OFF position the generator set shall immediately stop, bypassing all time delays. In the AUTO position the generator set shall be ready to accept a signal from a remote device to start and accelerate to rated speed and voltage.
2. EMERGENCY STOP switch. Switch shall be Red "mushroom-head" push-button. Depressing the emergency stop switch shall cause the generator set to immediately shut down, and be locked out from automatic restarting.
3. RESET switch. The RESET switch shall be used to clear a fault and allow restarting the generator set after it has shut down for any fault condition.
4. PANEL LAMP switch. Depressing the panel lamp switch shall cause the entire panel to be lighted with DC control power. The panel lamps shall automatically be switched off 10 minutes after the switch is depressed, or after the switch is depressed a second time.

C. Generator Set AC Output Metering. The generator set shall be provided with a metering set including the following features and functions:

1. Digital metering set, 1% accuracy, to indicate generator RMS voltage and current, frequency, output current, output KW, KW-hours, and power factor. Generator output voltage shall be available in line-to-line and line-to-neutral voltages, and shall display all three-phase voltages (line to neutral or line to line) simultaneously.
2. Analog voltmeter, ammeter, frequency meter, power factor meter, and kilowatt (KW) meter. Voltmeter and ammeter shall display all three phases. Meter scales shall be color coded in the following fashion: green shall indicate normal operating condition, amber shall indicate operation in ranges that indicate potential failure, and red shall indicate failure impending. Metering accuracy shall be within 1% at rated output. Both analog and digital metering is required.
3. The control system shall monitor the total load on the generator set, and maintain data logs of total operating hours at specific load levels ranging from 0 to 110% of rated load, in 10% increments. The control shall display hours of operation at less than 30% load and total hours of operation at more than 90% of rated load.
4. The control system shall log total number of operating hours, total kWH, and total control on hours, as well as total values since reset.

D. Generator Set Alarm and Status Display.

1. The generator set control shall include LED alarm and status indication lamps. The lamps shall be high-intensity LED type. The lamp condition shall be clearly apparent under bright room lighting conditions. Functions indicated by the lamps shall include:

- The control shall include five configurable alarm-indicating lamps. The lamps shall be field adjustable for any status, warning, or shutdown function monitored by the genset. They shall also be configurable for color, and control action (status, warning, or shutdown).
- The control shall include green lamps to indicate that the generator set is running at rated frequency and voltage, and that a remote start signal has been received at the generator set. The running signal shall be based on actual sensed voltage and frequency on the output terminals of the generator set.
- The control shall include a flashing red lamp to indicate that the control is not in automatic state, and red common shutdown lamp.
- The control shall include an amber common warning indication lamp.

2. The generator set control shall indicate the existence of the warning and shutdown conditions on the control panel. All conditions indicated below for warning shall be field-configurable for shutdown. Conditions required to be annunciated shall include:

low oil pressure (warning)
low oil pressure (shutdown)
oil pressure sender failure (warning)
low coolant temperature (warning)
high coolant temperature (warning)
high coolant temperature (shutdown)
high oil temperature (warning)
engine temperature sender failure (warning)
low coolant level (warning)
fail to crank (shutdown)
fail to start/overcrank (shutdown)
overspeed (shutdown)
low DC voltage (warning)
high DC voltage (warning)
weak battery (warning)
high AC voltage (shutdown)
low AC voltage (shutdown)
under frequency (shutdown)
over current (warning)
over current (shutdown)
short circuit (shutdown)
over load (warning)
emergency stop (shutdown)
(4) configurable conditions

3. Provisions shall be made for indication of four customer-specified alarm or shutdown conditions. Labeling of the customer-specified alarm or shutdown conditions shall be of the same type and quality as the above-specified conditions. The non-automatic indicating lamp shall be red, and shall flash to indicate that the generator set is not able to automatically respond to a command to start from a remote location.

E. Engine Status Monitoring.

1. The following information shall be available from a digital status panel on the generator set control :
   engine oil pressure (psi or kPA)
   engine coolant temperature (degrees F or C)
   engine oil temperature (degrees F or C)
   engine speed (rpm)
   number of hours of operation (hours)
   number of start attempts
   battery voltage (DC volts)
2. The control system shall also incorporate a data logging and display provision to allow logging of the last 10 warning or shutdown indications on the generator set, as well as total time of operation at various loads, as a percent of the standby rating of the generator set.

F. Engine Control Functions.

1. The control system provided shall include a cycle cranking system, which allows for user selected crank time, rest time, and # of cycles. Initial settings shall be for 3 cranking periods of 15 seconds each, with 15-second rest period between cranking periods.
2. The control system shall include an engine governor control, which functions to provide steady state frequency regulation as noted elsewhere in this specification. The governor control shall include adjustments for gain, damping, and a ramping function to control engine speed and limit exhaust smoke while the unit is starting.
3. The control system shall include time delay start (adjustable 0-300 seconds) and time delay stop (adjustable 0-600 seconds) functions.
4. The control system shall include sender failure monitoring logic for speed sensing, oil pressure, and engine temperature which is capable of discriminating between failed sender or wiring components, and an actual failure conditions.

G. Alternator Control Functions:

1. The generator set shall include a full wave rectified automatic digital voltage regulation system that is matched and prototype tested by the engine manufacturer with the governing system provided. It shall be immune from misoperation due to load-induced voltage waveform distortion and provide a pulse width modulated output to the alternator exciter. The voltage regulation system shall be equipped with three-phase line to neutral RMS sensing and shall control buildup of AC generator voltage to provide a linear rise and limit overshoot. The system shall include a torque-matching characteristic, which shall reduce output voltage in proportion to frequency below an adjustable frequency threshold. Torque matching characteristic shall be adjustable for roll-off frequency and rate, and be capable of being curve-matched to the engine torque curve with adjustments in the field. The voltage regulator shall include adjustments for gain, damping, and frequency roll-off. Adjustments shall be broad range, and made via digital raise-lower switches, with an alphanumeric LED readout to indicate setting level. Rotary potentiometers for system adjustments are not acceptable.
2. Controls shall be provided to monitor the output current of the generator set and initiate an alarm (over current warning) when load current exceeds 110% of the rated current of the generator set on any phase for more than 60 seconds. The controls shall shut down and lock out the generator set

when output current level approaches the thermal damage point of the alternator (over current shutdown). The protective functions provided shall be in compliance to the requirements of NFPA70 article 445.

3. Controls shall be provided to individually monitor all three phases of the output current for short circuit conditions. The control/protection system shall monitor the current level and voltage. The controls shall shut down and lock out the generator set when output current level approaches the thermal damage point of the alternator (short circuit shutdown). The protective functions provided shall be in compliance to the requirements of NFPA70 article 445.
4. Controls shall be provided to monitor the KW load on the generator set, and initiate an alarm condition (over load) when total load on the generator set exceeds the generator set rating for in excess of 5 seconds. Controls shall include a load shed control, to operate a set of dry contacts (for use in shedding customer load devices) when the generator set is overloaded.
5. A line to neutral sensing AC over/under voltage monitoring system that responds only to true RMS voltage conditions shall be provided. The system shall initiate shutdown of the generator set when alternator output voltage exceeds 110% of the operator-set voltage level for more than 10 seconds, or with no intentional delay when voltage exceeds 130%. Under voltage shutdown shall occur when the output voltage of the alternator is less than 85% for more than 10 seconds.

H. Other Control Functions

1. A battery monitoring system shall be provided which initiates alarms when the DC control and starting voltage is less than 25VDC or more than 32 VDC. During engine cranking (starter engaged), the low voltage limit shall be disabled, and DC voltage shall be monitored as load is applied to the battery, to detect impending battery failure or deteriorated battery condition.

2.05 Other equipment to be provided with the generator set

A. The generator set shall be provided with a mounted main line circuit breaker, sized to carry the rated output current of the generator set. The circuit breaker shall incorporate an electronic trip unit that operates to protect the alternator under all overcurrent conditions, or a thermal-magnetic trip with other overcurrent protection devices that positively protect the alternator under overcurrent conditions. The supplier shall submit time overcurrent characteristic curves and thermal damage curve for the alternator, demonstrating the effectiveness of the protection provided.

B. Outdoor Weather-Protective Enclosure

1. The generator set shall be provided with an outdoor enclosure, with the entire package listed under UL2200. The package shall comply with the requirements of the National Electrical Code for all wiring materials and component spacing. The total assembly of generator set, enclosure, and sub-base fuel tank (when used) shall be designed to be lifted into place using spreader bars. Housing shall provide ample airflow for generator set operation at rated load in an ambient temperature of 100F. The housing shall have hinged access doors as required to maintain easy access for all operating and service functions. All doors shall be lockable, and include retainers to hold the door open during service. Enclosure roof shall be cambered to prevent rainwater accumulation. Openings shall be screened to limit access of rodents into the enclosure. All electrical power and control interconnections shall be made within the perimeter of the enclosure.
2. Painting of hoses, clamps, wiring harnesses, and other non-metallic service parts shall not be acceptable. Fasteners used shall be corrosion resistant, and designed to minimize marring of the painted surface when removed for normal installation or service work.
3. Enclosure shall be constructed of minimum 12 gauge steel for framework and 14 gauge steel for panels. All hardware and hinges shall be stainless steel.
4. A factory-mounted exhaust silencer shall be installed inside the enclosure. The exhaust shall exit the enclosure through a rain collar and terminate with a rain cap. Exhaust connections to the generator set shall be through seamless flexible connections.
5. The enclosure shall include the following maintenance provisions:

- Flexible coolant and lubricating oil drain lines, that extend to the exterior of the enclosure, with internal drain valves
- External radiator fills provision.

Part 3. OPERATION

3.01 Sequence of Operation

A. Generator set shall start on receipt of a start signal from remote equipment. The start signal shall be via hardwired connection to the generator set control and a redundant signal over the required network connection.

B. The generator set shall complete a time delay start period as programmed into the control.

C. The generator set control shall initiate the starting sequence for the generator set. The starting sequence shall include the following functions:

1. The control system shall verify that the engine is rotating when the starter is signaled to operate. If the engine does not rotate after two attempts, the control system shall shut down and lock out the generator set, and indicate “fail to crank” shutdown.
2. The engine shall fire and accelerate as quickly as practical to start disconnect speed. If the engine does not start, it shall complete a cycle cranking process as described elsewhere in this specification. If the engine has not started by the completion of the cycle cranking sequence, it shall be shut down and locked out, and the control system shall indicate “fail to start”.
3. The engine shall accelerate to rated speed and the alternator to rated voltage. Excitation shall be disabled until the engine has exceeded programmed idle speed, and regulated to prevent over voltage conditions and oscillation as the engine accelerates and the alternator builds to rated voltage.

D. When all start signals have been removed from the generator set, it shall complete a time delay stop sequence. The duration of the time delay stop period shall be adjustable by the operator.

E. On completion of the time delay stop period, the generator set control shall switch off the excitation system and shall shut down.

1. Any start signal received after the time stop sequence has begun shall immediately terminate the stopping sequence and return the generator set to isochronous operation.

Part 4. OTHER REQUIREMENTS

4.01 Submittals.

A. Within 10 days after award of contract, provide six sets of the following information for review:

- Manufacturer's product literature and performance data, sufficient to verify compliance to specification requirements.
- Manufacturer's certification of prototype testing.
- Manufacturer's published warranty documents.

- Shop drawings showing plan and elevation views with certified overall dimensions, as well as wiring interconnection details.
- Interconnection wiring diagrams showing all external connections required; with field wiring terminals marked in a consistent point-to-point manner.
- Manufacturer's installation instructions.

4.02 Factory Testing.

A. The generator set supplier shall perform a complete operational test on the generator set prior to shipping from the factory. A certified test report shall be provided. Equipment supplied shall be fully tested at the factory for function and performance.

B. Costs for travel expenses will be the responsibility of the owner and consulting engineer. Supplier is responsible to provide two weeks notice for testing.

C. Generator set factory tests on the equipment shall be performed at rated load. Tests shall include: run at full load, maximum power, voltage regulation, transient and steady-state governing, single step load pickup, and function of safety shutdowns.

4.03 Installation

A. Equipment shall be installed by the contractor in accordance with final submittals and contract documents. Installation shall comply with applicable state and local codes as required by the authority having jurisdiction. Install equipment in accordance with manufacturer's instructions and instructions included in the listing or labeling of UL listed products.

B. Installation of equipment shall include furnishing and installing all interconnecting wiring between all major equipment provided for the on-site power system. The contractor shall also perform interconnecting wiring between equipment sections (when required), under the supervision of the equipment supplier.

C. Equipment shall be installed on concrete housekeeping pads. Equipment shall be permanently fastened to the pad in accordance with manufacturer's instructions and seismic requirements of the site.

D. Equipment shall be initially started and operated by representatives of the manufacturer.

E. All equipment shall be physically inspected for damage. Scratches and other installation damage shall be repaired prior to final system testing. Equipment shall be thoroughly cleaned to remove all dirt and construction debris prior to final testing of the system.

4.04 On-Site Acceptance Test:

A. The complete installation shall be tested for compliance with the specification following completion of all site work. Testing shall be conducted by representatives of the manufacturer, with required fuel supplied by Contractor. The Engineer shall be notified in advance and shall have the option to witness the tests.

B. Installation acceptance tests to be conducted on-site shall include a "cold start" test, a two hour full load test, and a one step rated load pickup test in accordance with NFPA 110. Provide a resistive load bank and make temporary connections for full load test, if necessary.

C. Perform a power failure test on the entire installed system. This test shall be conducted by opening the power supply from the utility service, and observing proper operation of the system for at least 2 hours. Coordinate timing and obtain approval for start of test with site personnel.

4.05 Training

A. The equipment supplier shall provide training for the facility operating personnel covering operation and maintenance of the equipment provided. The training program shall be not less than 4 hours in duration and the class size shall be limited to 5 persons. Training date shall be coordinated with the facility owner.

4.06 Service and support

A. The manufacturer of the generator set shall maintain service parts inventory at a central location which is accessible to the service location 24 hours per day, 365 days per year.

B. The generator set shall be serviced by a local service organization that is trained and factory certified in generator set service. The supplier shall maintain an inventory of critical replacement parts at the local service organization, and in service vehicles. The service organization shall be on call 24 hours per day, 365 days per year.

C. The manufacturer shall maintain model and serial number records of each generator set provided for at least 20 years.

4.07 Warranty

A. The generator set and associated equipment shall be warranted for a period of not less than 2 years from the date of commissioning against defects in materials and workmanship.
The warranty shall be comprehensive. No deductibles shall be allowed for travel time, service hours, repair parts cost, etc.

END OF SECTION 16 62 7

SECTION 16628 - EMERGENCY/STAND BY SYSTEMS - TRANSFER SWITCHES

Part 1. GENERAL

1.01 Scope

A. Provide complete factory assembled power transfer equipment with digital electronic controls designed for surge voltage isolation, and including voltage sensors on all phases of both sources, linear operator, permanently attached manual handles, positive mechanical and electrical interlocking, and mechanically held contacts.

B. The generator set manufacturer shall warrant transfer switches to provide a single source of responsibility for all the products provided. Technicians specifically trained to support the product and employed by the generator set supplier shall service the transfer switches.

1.02 Codes and Standards

A. The automatic transfer switch shall conform to the requirements of the following codes and standards:

1. UL1008. The transfer switch shall be UL listed and labeled.
2. CSA C22.2, No. 14 – M91 Industrial Control Equipment.
3. CSA 282, Emergency Electrical Power Supply for Buildings
4. EN55011, Class B Radiated Emissions
5. EN55011, Class B Conducted Emissions
6. IEC 1000-4-5 (EN 61000-4-5); AC Surge Immunity. Similar waveforms are described in ANSI/IEEE 62.41-1991
7. IEC 1000-4-4 (EN 61000-4-4) Fast Transients Immunity
8. IEC 1000-4-2 (EN 61000-4-2) Electrostatic Discharge Immunity
9. IEC 1000-4-3 (EN 61000-4-3) Radiated Field Immunity
10. IEC 1000-4-6 Conducted Field Immunity
11. IEC 1000-4-11 Voltage Dip Immunity
12. NFPA20 – Fire Pumps. Transfer switches serving fire pumps shall be specifically listed and labeled for that application.
13. NFPA70 – National Electrical Code. Equipment shall be suitable for use in systems in compliance to Article 700, 701, and 702.
14. NFPA99 – Essential Electrical Systems for Health Care Facilities
15. NFPA110 – Emergency and Standby Power Systems. The transfer switch shall meet all requirements for Level 1 systems.
16. IEEE446 – Recommended Practice for Emergency and Standby Power Systems for Commercial and Industrial Applications.
17. NEMA ICS10-1993 – AC Automatic Transfer Switches.

B. The transfer switch manufacturer shall be certified to ISO 9001 International Quality Standard and shall have third party certification verifying quality assurance in design/development, production, installation, and service, in accordance with ISO 9001.

1.03 Acceptable Manufacturers

A. Only approved bidders shall supply equipment provided under this contract. Equipment specifications for this project are based on microprocessor-based transfer switches manufactured by Cummins Onan. Equipment by other suppliers that meets the requirement of this specification is acceptable, if approved not less than 2 weeks before scheduled bid date. Proposals must include a line by line compliance statement based on this specification.

Part 2. PRODUCTS

2.01 Power Transfer Switch

A. Ratings

1. Refer to the project drawings for specifications on the sizes and types of transfer switch equipment, withstand and closing ratings, number of poles, voltage and ampere ratings, enclosure type, and accessories.
2. Main contacts shall be rated for 600 Volts AC minimum.
3. Transfer switches shall be rated to carry 100 percent of rated current continuously in the enclosure supplied, in ambient temperatures of -40 to +60 degrees C, relative humidity up to 95% (non-condensing), and altitudes up to 10,000 feet (3000M).
4. Transfer switch equipment shall have with stand and closing ratings (WCR) in RMS symmetrical amperes greater than the available fault currents shown on the drawings. The transfer switch and its upstream protection shall be
   coordinated. The transfer switch shall be third party listed and labeled for use with the specific protective device(s) installed in the application.

B. Construction

1. Transfer switches shall be double-throw, electrically and mechanically interlocked, and mechanically held in the source 1 and source 2 positions. The transfer switch shall be specifically designed to transfer to the best available source if it inadvertently stops in a neutral position.
2. Transfer switches rated through 1000 amperes shall be equipped with permanently attached manual operating handles and quick-break, quick-make over-center contact mechanisms. Transfer switches over 1000 amperes shall be equipped with manual operators for service use only under de-energized conditions.
3. Main switch contacts shall be high-pressure silver alloy. Contact assemblies shall have arc chutes for positive arc extinguishing. Arc chutes shall have insulating covers to prevent inter-phase flashover.
4. Transfer switch internal wiring shall be composed of pre-manufactured harnesses that are permanently marked for source and destination. Harnesses shall be connected to the control system by means of locking disconnect plug(s), to allow the control system to be easily disconnected and serviced without disconnecting power from the transfer switch mechanism.
5. Transfer switch shall be provided with flame retardant transparent covers to allow viewing of switch contact operation but prevent direct contact with line voltage components.
6. Transfer switches that are designated on the drawings as 3-pole shall be provided with a neutral bus and lugs. The neutral bus shall be sized to carry 100% of the current designated on the switch rating.

C. Connections

1. Field control connections shall be made on a common terminal block that is clearly and permanently labeled.

2. Transfer switch shall be provided with AL/CU mechanical lugs sized to accept the full output rating of the generator set.

2.02 Transfer Switch Control

A. Operator Panel. Each transfer switch shall be provided with a control panel to allow the operator to view the status and control operation of the transfer switch. The operator panel shall be a sealed membrane panel rated NEMA 3R/IP53 or better (regardless of enclosure rating) that is permanently labeled for switch and control functions. The operator panel shall be provided with the following features and capabilities.

1. High intensity LED lamps to indicate the source that the load is connected to (source 1 or source 2); and which source(s) are available. Source available LED indicators shall operate from the control microprocessor to indicate the true condition of the sources as sensed by the control.
2. High intensity LED lamps to indicate that the transfer switch is "not in auto" (due to control being disabled or due to bypass switch enabled or in operation) and "Test/Exercise Active" to indicate that the control system is testing or exercising the generator set.
3. "OVERRIDE" pushbutton to cause the transfer switch to bypass any active time delays for start, transfer, and retransfer and immediately proceed with its next logical operation.
4. "TEST" pushbutton to initiate a preprogrammed test sequence for the generator set and transfer switch. The transfer switch shall be programmable for test with load or test without load.
5. "RESET/LAMP TEST" pushbutton that will clear any faults present in the control, or simultaneously test all lamps on the panel by lighting them.
6. The control system shall continuously log information on the number of hours each source has been connected to the load, the number of times transferred, and the total number of times each source has failed. This information shall be available via the service tool or an operator display panel.
7. Vacuum fluorescent alphanumeric display panel with push-button navigation switches. The display shall be clearly visible in both bright (sunlight) and no light conditions. It shall be visible over an angle of at least 120 degrees. The Alphanumeric display panel shall be capable of providing the following functions and capabilities:

a) Display source condition information, including AC voltage for each phase of normal and emergency source, frequency of each source. Voltage for all three phases shall be displayed on a single screen for easy viewing of voltage balance.

b) Display source status, to indicate source is connected or not connected.

c) Display load data, including 3-phase AC voltage, 3-phase AC current, frequency, KW, KVA, and power factor. Voltage and current data for all phases shall be displayed on a single screen.

d) The display panel shall allow the operator to view and make the following adjustments in the control system, after entering an access code:

i. Set nominal voltage and frequency for the transfer switch.
ii. Adjust voltage and frequency sensor operation set points.
iii. Set up time clock functions.
iv. Set up load sequence functions.
v. Enable or disable control functions in the transfer switch, including program transition.
vi. Set up exercise and load test operation conditions, as well as normal system time delays for transfer time, time delay start, stop, transfer, and retransfer.

e) Display Real Time Clock data, including date, and time in hours, minutes, and seconds. The real time clock shall be "Year 2000" compliant and incorporate provisions for automatic daylight savings time and leap year adjustments. The control shall also log total operating hours for the control system.

f) Display service history for the transfer switch. Display source connected hours, to indicate the total number of hours connected to each source. Display number of times transferred, and total number of times each source has failed.

g) Display fault history on the transfer switch, including condition, and date and time of fault. Faults to include controller checksum error, low controller DC voltage, ATS fail to close on transfer, ATS fail to close on retransfer, battery charger malfunction, network battery voltage low, network communications error.

B. Internal Controls

1. The transfer switch control system shall be configurable in the field for any operating voltage level up to 600VAC. Provide RMS voltage sensing and metering that is accurate to within plus or minus 1% of nominal voltage level. Frequency sensing shall be accurate to within plus or minus 0.2%. Voltage sensing shall be monitored based on the normal voltage at the site. Systems that utilize voltage monitoring based on standard voltage conditions are not acceptable.
2. Transfer switch voltage sensors shall be close differential type, providing source availability information to the control system based on the following functions:

a) Monitoring all phases of the normal service (source 1) for under voltage conditions (adjustable for pickup in a range of 85 to 98% of the normal voltage level and dropout in a range of 75 to 98% of normal voltage level).

b) Monitoring all phases of the emergency service (source 2) for under voltage conditions (adjustable for pickup in a range of 85 to 98% of the normal voltage level and dropout in a range of 75 to 98% of pickup voltage level).

c) Monitoring all phases of the normal service (source 1) and emergency service (source 2) for voltage imbalance.

d) Monitoring all phases of the normal service (source 1) and emergency service (source 2) for loss of a single phase.

e) Monitoring all phases of the normal service (source 1) and emergency service (source 2) for phase rotation.

f) Monitoring all phases of the normal service (source 1) and emergency service (source 2) for over voltage conditions (adjustable for dropout over a range of 105 to 135% of normal voltage, and pickup at 95-99% of dropout voltage level).

g) Monitoring all phases of the normal service (source 1) and emergency service (source 2) for over or under frequency conditions.

h) Monitoring the neutral current flow in the load side of the transfer switch. The control shall initiate an alarm when the neutral current exceeds a preset adjustable value in the range of 100-150% of rated phase current for more than an adjustable time period of 10 to 60 seconds.

3. The transfer switch shall be configurable to control the operation time from source to source (program transition operation). The control system shall be capable of enabling or disabling this feature, and adjusting the time period to a specific value. A phase band monitor or similar device is not an acceptable alternate for this feature.
4. The transfer switch shall incorporate adjustable time delays for generator set start (adjustable in a range from 0-15 seconds); transfer (adjustable in a range from 0-120 seconds); retransfer (adjustable in a range from 0-30minutes); and generator stop (cooldown) (adjustable in a range of 0-30 minutes).
5. The control system shall be designed and prototype tested for operation in ambient temperatures from -40C to +70C. It shall be designed and tested to comply with the requirements of the following voltage and RFI/EMI standards
6. The control shall have optically isolated logic inputs, high isolation transformers for AC inputs, and relays on all outputs, to provide optimum protection from line voltage surges, RFI and EMI.

7. The transfer switch shall be provided with a battery charger for the generator set starting batteries. The battery charger shall be a float type charger rated 10 amps. The battery charger shall include an ammeter for display of charging current and shall have fused AC inputs and DC outputs. The charger shall also include fault indications for high and low dc voltage, and supply power failed, and dry contacts for external indication of these fault conditions. Supply power failed indication shall be displayed on the ATS control panel.

C. Control Interface

1. The transfer switch will provide an isolated relay contact for starting of a generator set. The relay shall be normally held open, and close to start the generator set. Output contacts shall be form C, for compatibility with any generator set.

2.03 Enclosure

A. Enclosures shall be UL listed. The enclosure shall provide NEC wire bend space. The cabinet door shall be key-locking.

B. Transfer switches shall be mounted in enclosures of the types as designated on the drawings. Separate enclosures shall be the NEMA type 1. The cabinet shall provide code-required wire bend space at point of entry as shown on the drawings. Manual operating handles and all control switches (other than key-operated switches) shall be accessible to authorized personnel only by opening the key-locking cabinet door. Transfer switches with manual operating handles and/or non key-operated control switches located on outside of cabinet do not meet this specification and are not acceptable.

Part 3. OPERATION

3.01 Open Transition Sequence of Operation

A. Transfer switch normally connects an energized utility power source (source 1) to loads and a generator set (source 2) to the loads when normal source fails. The normal position of the transfer switch is source 1 (connected to the utility), and no start signal is supplied to the genset.

B. Generator Set Exercise (Test) With Load Mode. The control system shall be configurable to test the generator set under load. In this mode, the transfer switch shall control the generator set in the following sequence:

1. Transfer switch shall initiate the exercise sequence at a time indicated in the exercise timer program, or when manually initiated by the operator.
2. When the control systems senses the generator set at rated voltage and frequency, it shall operate to connect the loads to the generator set by opening the normal source contacts, and closing the alternate source contacts a predetermined time period later. The timing sequence for the contact operation shall be programmable in the controller.
3. The generator set shall operate connected to the load for the duration of the exercise period. If the generator set fails during this period, the transfer switch shall automatically reconnect the generator set to the normal service.
4. On completion of the exercise period, the transfer switch shall operate to connect the loads to the normal source by opening the alternate source contacts, and closing the normal source contacts a predetermined time period later. The timing sequence for the contact operation shall be programmable in the controller.

5. The transfer switch shall operate the generator set unloaded for a cooldown period, and then remove the start signal from the generator set. If the normal power fails at any time when the generator set is running, the transfer switch shall immediately connect the system loads to the generator set.

C. Generator Set Exercise (Test) Without Load Mode. The control system shall be configurable to test the generator set without transfer switch load connected. In this mode, the transfer switch shall control the generator set in the following sequence:

1. Transfer switch shall initiate the exercise sequence at a time indicated in the exercise timer program, or when manually initiated by the operator.
2. When the control systems senses the generator set at rated voltage and frequency, it shall operate the generator set unloaded for the duration of the exercise period.
3. At the completion of the exercise period, the transfer switch shall remove the start signal from the generator set. If the normal power fails at any time when the generator set is running, the transfer switch shall immediately connect the system loads to the generator set.

Part 4. OTHER REQUIREMENTS

4.01 Factory Testing.

A. The transfer switch supplier shall perform a complete operational test on the transfer switch prior to shipping from the factory. A certified test report shall be available on request. Test process shall include calibration of voltage sensors.

4.02 Service and support

A. The manufacturer of the transfer switch shall maintain service parts inventory at a central location which is accessible to the service location 24 hours per day, 365 days per year.

B. The transfer switch shall be serviced by a local service organization that is trained and factory certified in both generator set and transfer switch service. The supplier shall maintain an inventory of critical replacement parts at the local service organization, and in service vehicles. The service organization shall be on call 24 hours per day, 365 days per year.

The manufacturer shall maintain model and serial number records of each transfer switch provided for at least 5 years.

END OF SECTION 16 62 8

SECTION 28 16 00 - INTRUSION ALARM SYSTEM

PART 1 - INTRUSION ALARM SYSTEM

General:

A. This Standard was prepared as a General Intrusion Alarm Specification Guide.

Description of Work:

A. Provide new control panels, power supplies, sensors, contacts, wiring, etc., for complete operational systems. All wiring is to be new. See specification section 01010 for additional requirements.

B. Contractor shall currently be licensed with the Texas State Board of Private Investigators and Private Security Agencies for the sale and installation of security equipment.

C. NEC Compliance: Comply with NEC as applicable to construction and installation of intrusion alarm system components and accessories.

D. UL Compliance and Labeling: Provide intrusion alarm system components which are UL-listed and labeled.

E. NOTIFICATION OF DESCREPANCIES: Refer to Electrical General Provisions.

F. SUBSTITUTIONS AND REQUIRED PRIOR APPROVAL: Refer to Electrical General Provisions.

Acceptable Manufacturers:

A. Manufacturer: Equipment as manufactured by Digital Security Controls, Visonic Ltd., Sentrol, Arrowhead Technologies and Adcor Electronics approved equal. These units reflect the type of operation and quality of product required.

MATERIALS AND EQUIPMENT:

PART 2 - INTRUSION ALARM SYSTEM

General:

A. Provide an intrusion alarm system with products of type, sizes and capacities indicated which comply with manufacturer's standard design, materials and components. Construct with published product information and as required for a complete installation.

Security Panel:

General Description:

A. The security panel shall be a TELEPHONE ACCESS/VOICE RESPONSE System.

B. All user functions are able to be performed by telephone, both on and off premises, telephone access protected by optional access codes, with separate access codes, with separate access codes foe external and internal operation. Able to operate in presence of answering machines. Verbally reports system status over the telephone, custom programmable by zone from vocabulary of at least 100 words, system can operate with or without keypads and has three (3) Form C relays for telephone control of devices such as lights, doors, heating and air conditioning. (Referenced Equipment: DSC Power 832 with Escort Module).

Control Unit:

A. Keypad programming, Downloadable/Uploadable locally or remote, secure keypad programming, EPPROM Memory. Minimum of Sixteen full programmable zones with EOL supervision, hardware momentary panic input, emergency keypad panic condition, Control Zones and 24 Hr. Zone types. Programmable central station codes per zone, individual reporting codes, bell test option, smoke reset verification, separate bell cutoff times, programmable entry exit times and programmable bell lockout. (Reference Equipment: DSC Power 832 with Escort Module).

User Codes:

A. Minimum of Six programmable user codes, ambush code capability, user codes programmable by master user at keypad and open/close by user ID.

Power Specifications:

A. Circuitry to insure integrity of microprocessor, total Aux. Power of 500 mA. Regulated, transformer of 12V, 40 VA and bell power of 1 Amp.

Central Station Communication:

A. Each unit will incorporate dual Central Station telephone number, two CS account numbers (3 or 4 digits), pulse or touch tone dialing options, transmission speeds of 10PPS, 20PPS, 40PPS with or without parity, formats to include 3x1, 4x1, 4x2, Expanded, Single round Expanded, split reporting option for openings and closings, sonalert ring back, 24 hour test feature and dialer disable option for LOCAL installations.

Key Pads:

A. Each unit shall be able to utilize up to 4 keypads per system, utilizing a 4 wire device and be able to utilize both LED and LCD keypads displays. LCD or LED Display shall be compatible with Security Panel. Unit shall display current system status with easy to read LED display or two lines by sixteen character display two keypads will be installed with each control panel. (Referenced Equipment: DSC PC3000LCD or PC3000RK).

Listings:

A. Unit will be UL Household Combination Burglary/Fire, and California State Fire Marshall (CSFM) listed, or is pending UL Certification.

General Description:

Power Supply:

Full charge DC Voltage 13.8V
Maximum Continuous Current 2.0Amp
Maximum Full Load Current 5 Amp
Battery Interrupt Current (fuse) 5 Amp
Voltage Droop (at Max. Cont. Current) 0.05%
Maximum Ripple 5 MV
Battery Supplied 12 V, 6.5 AH
Recharge Time at No Load 6 Hours
Recharge Time at Max. Cont. Current 40 Hours
AC Input-RMS 16.5VAC
Transformer Supplied (U.L cl2, plug-in) 120/16.5VAC, 40VA
Dimensions, Circuit Board 2.5”x3.2”
Dimensions, Battery 5.9”x3.75”x2.5”
Weight 6lbs.

(Referenced equipment Adcor #MH-1250)

Ceiling Mounted Infrared Sensor 1:

General Description:

Optical:

Lens type: Aspherical fresnel lens with varying focal lengths.
Detection pattern: 8 ft. ceiling: 25 ft. diameter; 12 ft. ceiling: 36ft. diameter

Electrical:

Voltage: 9-16 VDC
Current: 15mA.
Relay output: Normally closed (fail safe) contacts 18 ohm resistor in series with contacts. Rating -0.1 A resistive/24 VDC.

Tamper output: Normally closed. Rating -0.5A resistive/24 VDC.
Alarm period: 2-7 seconds.
Pulse counter: Two position selector, 1 or 2 pulses with alternate polarity signal processing.
LED: Switchable on or off.
Detector: Dual element low noise.

MOUNTING

Ceiling mounting ht: Up to 12ft. (3.6m)

ENVIRONMENTAL

Operating temp: 14 deg. F to 122 deg. F (-10 deg. C to 50 deg. C.)

Storage temp: -4 deg. F to 140 deg. F (-20 deg. C to 60 deg. C)

PHYSICAL

Dimensions: 3.4 in. (86mm) diameter, 1 in. (25mm) deep.
Weight: 2 ounces (64 grams).
Color: Soft white.

Ceiling Mounted Infrared Sensor 2:

General Description:

A. Ceiling Mount Passive Infrared Detector, with programmable PULSE COUNT, offering a 360 degree field of view with 27 zones of detection. At a ceiling height of 15 ft. (4.6m) the diameter of the field of view shall be 52 ft. (15.8m). Unit will have as an option a recess mounting adapter/kit, which will be utilized in all lay-in ceiling and plasterboard ceiling applications.

Specifications:

A. Passive infrared intrusion detector will be a (360 degree x 52 ft. [15.8m] diameter, 6 to 14 VDC, Pulse Count) type detector which shall consist of a chassis containing the snap-out electronic circuitry and a cover containing the optics.

Pattern Coverage: 360 degree conical, 52 ft. (15.8m) diameter pattern.
Zones of Detection: 12 OUTER, 12 INNER, 3 CENTER. Each zone shall be 2 degree horizontal and 4 degree vertical.

Range: 12 OUTER; 30 ft. (9.1m) maximum, 12 INNER; 20 ft. (6.1m) maximum, 3 CENTER; 15 ft. (4.5m) maximum.
Alignment Angle: Chassis provided ability to adjust alignment +/- 15 degrees,
Power Input: 6 VDC to 14 VDC, 40 mADC maximum in non-alarm mode, 36 mADC maximum alarm mode, 45 mADC maximum with Pattern Locator lit.
Relay Output: SPDT contacts (NO-C-NC), 100mADC maximum, 130 VDC maximum, resistive load.
Infrared Spectrum: 7 to 14 micrometers.
Infrared Detector: Dual element, pyro-electric, hermetically sealed.
Operating Temp: -4 degree F to +120 degree F. -20 degree C to +149 degree C.
Physical: 2.37in H, 4.69 in D 6.00 cm H, 11.90cm D.
Construction: ABS plastic chassis and cover. Components mounted on printed circuit board.
Finish: White chassis and cover.
LED Indicator Lamps: Red ALARM/WALK TEST lamp, yellow PULSE COUNT lamp, red PATTERN LOCATOR lamp.
Tamper Provisions: Cover activated switch (closed contacts with cover on), 50 mADC at 120 VDC maximum, terminal block connections.
Controls: Shorting clip for field programming PULSE COUNT levels 1,3,or 5. Two LED DISABLE clips for ALARM/WALK TEST and/or PULSE COUNT lamps.

Listing: UL, suitable for use in UL Listed local and central station alarm system.

(Reference Arrowhead IR-365)

Infrared Sensor 1:

General Description:

A. Unit shall be a passive infrared detector with increased immunity to RFI, vibration, static, lighting, temperature changes and other false alarm sources. Detector to utilize a dual pyro-electric sensor with jumperselectable one or two-zone detection. Unit to utilize an opaque frosted white, visible-light filtering fresnel lens that focuses the infrared energy on the pyro-electric sensor while reducing false alarm from stray light sources. Unit will feature fiveinterchangeable lenses in standard, long range, extra wide angle, pet alley and curtain. Until will mount to corner of walls and utilize a swivel bracket for mounting. Unit will be installed at a manufacturer's recommended height. Unit will be constructed of fire-retardant ABS plastic, incorporate SMD technology and as an option have a mirror sighting system that mounts on the base of the unit for accurate aiming of the detector. The mirror will have imprinted coverage pattern grids used to view area to be covered to identify zones for masking.

Specifications:

Voltage: 7V to 18 VDC
Current: 8 mA typical, 10 mA max.
Ranges (lenses):
Standard: 45'x90 deg.
Long Range: 90'x6 deg.
Extra Wide: 20'x140 deg.
Pet Alley: 35'x90 deg.
Curtain: 40'x6 deg.
Degrees of Swivel: +/-10 deg. to right or left: 10 deg. up, to 15 deg. down.
LED indicator: Walktest.
Max. loop rating: Form A relay contact, 18 VDC 50 mA with lightning protection of 400 watts for 1 msec pulse.
Alarm contacts: Normally closed, fail safe contacts with 10 ohm resistor in series.
Alarm duration: 2-5 seconds.
Cover tamper contacts: Normally closed. Rating: 50 mA.
Static & lightning immunity: 2.5 KV, 1 msec decay 2 joules maximum energy impulse
RFI rejection: RFI interference up to 10 V/meter over frequency range of 0 to 1000 MHz.
Operating temperature: 10 deg. to 120 deg. F.
Humidity: 10% to 90% noncondensing.
Size: 2.875" (7.30cm) W x 3.688" (9.37cm) L x 2.063" (5.24 cm)D
Case color: Off-White
OPTION: Mirror sighting kit.

(Reference Sentrol 6155)

Curtain Infrared Sensor:

General Description:

A. Curtain Infrared Sensor shall be of such design as to be mounted horizontally providing a Solid Curtain able to protect a 45x20 ft. (13.5 x 6m) area. Unit will be mounted at ceiling height.

Specifications:

Electrical:

Voltage: 9-16 VDC
Current: 20mA.
Relay output: Normally closed or form-c (fail safe) contacts. 18 ohm resistor in series with contacts. Rating – 0.1 resistive/
24 VDC.
Tamper output: Normally closed. Rating – 0.5A resistive 24 VDC.
Alarm period: 2-5 seconds.
Tamper Contacts: Normally closed. Rating – 0.5A resistive/24 VDC.
LED: Walk Test - (switchable).
Pulse Counter: Two position selector, 1 or 2 pulses with opposite polarity.
Detector: Dual element low noise pyro-electric detector.

MOUNTING: Wall or ceiling mount.

ENVIRONMENTAL:

Operating Temp: 0 deg. C to 120 deg. C (-32 deg. F to 120 deg. F)
Storage Temp: -20 deg. C to 60 deg. C (-4 deg. F to 140 deg. F)
RFI Protection: Greater than 20V/m to 100 MHz.

Physical:

Dimensions: 4.1 x 2.5 x 2.1 inch (10.5 x 6.5 x 5.3cm)
Weight: 3.2 ounces (90 grams).
Color: White.

(Reference Visonic CH-1000)

Surface Mount Magnetic Contacts:

General Description:

A. The switch shall be a hermetically sealed reed switch, UL rated for Central Station direct wire circuits (indoor and outdoor) at 130V @ 50 mA, 100,000 cycles minimum. Connection to switch shall be made through # 6 screw terminals. A plastic cover shall be provided to protect screw terminals and to discourage tampering.
Switch and magnet shall be a nominal 2 9/16”L. x 1/2”H. x 9/16”D., and have mounting holes on 2-1/8” centers. Color shall be off-white. Switch and magnet shall be specified as wide gap distance type, with a make distance type, with a make distance up to 1 ½” distance +/-20%.

Voltage: 120 V MAX
Current: 0.5 A MAX

Power: 10.0 W MAX
Cycles: 10,000,000

(Reference Sentrol 1085TW off white)

Installation of Intrusion Alarm System:

Interlocking Systems:

A. The intrusion alarm system shall upon activation, notify the Central Monitoring Station at EPISD Police Services via telephone lines. Furnish and install appropriate wiring required for interconnection of control panel to telephone system.

B. Each control panel shall have the ability to monitor sixteen (16) zones. Contractor shall insure that correct number of control panels and power supplies are installed in order to provide for zones as shown on drawings.

C. Each panel utilized at the site will have two (2) keypads. An LED type keypad is to be mounted on the wall in the administrative office and the second unit, and LCD type is to be mounted on the front of the control panel. Location of keypad at the office area to be where directed by Engineer. Contractor shall provide conduit and wiring as necessary for operation of unit. Old wiring shall be replaced complete. Existing conduit or raceway can be reused if approved by Engineer for particular locations. Outlet box and conduit feed for unit must be recessed where gypboard and stud walls occur. For locations where masonry, solid concrete or plaster walls occur, Contractor is to provide surface raceway (wiremold or equal) so as to provide acceptable appearance to Engineer. Surface raceway must be painted to match existing wall color. Painting must comply with specification 09900 requirements.

D. At least one power supply will be installed within its' own enclosure, not in the intrusion alarm control panel, for powering all security monitoring devices. The power supply furnished with intrusion alarm control panel is not to be used for powering devices. Each power supply must have its' own battery and transformer. All power supplies are to be located at main control panel location even though serving remote buildings. Contractor shall provide load calculations to Engineer on loading of power supplies which are to be loaded no more than 75% of rating. The quantity of devices and their respective load draw is to be included. Provide additional power supplies as required.

E. Wiring: Wiring for the intrusion alarm system shall be as follows:

Infrared detectors-eighteen (18) gauge-four (4) conductor cable.
Door contacts-eighteen gauge (18)-two (2) conductor cable.

F. Color coding is to be maintained throughout the system. The end-of-line resistor is to be at control panel only. Connect initiation portion of circuit using one conductor (white) with other conductor (green) not terminated on devices but returning to panel. The red and black conductors are for power supply.

G. Wherever color coding is found in non-compliance, Contractor shall reconnect affected devices prior to acceptance of system.

H. One of the above cables shall be run in ½” conduit. Two to three of the above cables shall be run in minimum ¾” conduit; six cables shall be run in minimum 1” conduit. No more that six cables will be allowed in a single 1” conduit and no more than three cables in a single ¾” conduit.

I. The Tamper circuit on each of the Security Sensors will be wired in series with the alarm contacts to furnish an alarm in the event the cover is removed or the units cover is removed or vandalized.

J. The Visonic Disc sensors are to be mounted on lay- in acoustical ceilings as noted on drawing detail. The sensors are to be altered to have a pig tail for easy wiring connection at outlet boxes.

K. Wiring connections in the field are to be with wire nuts. Telephone bean type connectors are not acceptable.

L. The intrusion alarm control panel is to be programmed by Owner’s technicians. Since the intrusion alarm control panel only needs one telephone line, the extra line is not to be reused. The Contractor is to leave the telephone lines unconnected. Owner’s technicians will make the required telephone line connection.

M. At key pad locations, provide a wire grommet at point where wiring passes through metal enclosures. The Contractor shall provide two 8” x 10” black color picture frames with zone map information and must be install next to each of the key pads. Engineer will provide maps for use in picture frames.

END OF SECTION 28 16 00

SECTION 28 31 00 - FIRE DETECTION AND ALARM

PART 1 - GENERAL STANDARDS

Description

A. This section covers the minimum requirements pertaining to the design, manufacture and installation of the Fire Alarm Systems. The systems shall be integrated, proprietary, monitoring and control systems, using distributed processing and digital transmission techniques with solid state components. Equipment shall include, but not be limited to the following;
Fire Alarm Control Panels (FACP)
Manual Fire Alarm Stations
Smoke Detectors
Heat Detectors
Audio/Visual Annunciators
Relays - Fan Shutdown and Computer Room System Interface
Water - Flow Switches
Tamper Switches
Annunciator Panels

1. The use of flashing exit signs will be not acceptable.
2. All building systems will be tied into the building fire alarm. This shall include any subsystem such as automatic data processing (ADP) areas and telecommunication areas.
3. The work covered by this specification includes the system equipment specified, installation and necessary control wiring to insure a fully operable system. In addition, the installation shall include all memory software, push buttons, indicator lamps, electronic hardware and accessories for a completed operable system in accordance with the AOperations@ paragraph of this guideline.
4. The system shall be fully usable as a UL listed Fire Alarm/Life Safety System, and all system devices shall bear the UL label. In addition, the system shall conform to the requirements of the publications listed below:

Factory Mutual Engineering Corp., Factory Mutual System Publication, AFactory Mutual Approval Guide,@ latest edition.

NFPA Standards: Latest editions
No. 70 National Electrical Code
No. 72 Protection Signaling Systems
No. 72E Automatic Fire Detectors
No. 101 Life Safety Code

Basic Design:

A. The systems shall be modular design to allow future expansion with a Minimum of hardware additions. The systems shall be equipped with battery standby for minimum of 90 minutes operation during commercial power outages and they shall instantly revert to battery power upon loss of line voltage.

Operation:

A. An integrated control system in each building shall provide all power, annunciation, supervision, controls and standby emergency battery power for the detection and alarm system. The control

panels shall be modular in construction, containing all necessary modules to operate with capability of being expanded at any time up to the predetermined system maximum capacity.

B. The system shall consist of all detection devices, control equipment, audio-visions, remote annunciators installed, wired and connected in accordance with the drawings and specifications for function as specified, herein.

C. The system shall be electrically supervised. Zone receiving circuits shall be individually supervised for open wiring, ground faults, the loss of battery or fuse, low battery and module replacement. Detection of an input zone trouble condition shall be individually annunciated by an appropriate L.E.D. Signal circuits shall be supervised for open circuits, shorts, and general faults. Circuit trouble shall be individually annunciate. Fire alarm signals shall override trouble signals.

D. The fire alarm system shall be provided with 24 hour battery by connecting to the emergency power system in the building. The system shall function as follows upon activation of any automatic device (smoke detector, heat detector, water-flow switch) or activation of a manual pull station.
1. Flash the respective zone L.E.D. at the Fire Alarm Control Panel and at the remote annunciator.
2. Activate audio-visual signal units only on the floor of alarm initiation.
3. Shut down HVAC units.
4. Provide two (2) sets of dry contact in the main buildings fore alarm control panels for interface of systems for remote signal monitoring.
5. Fire alarm control panels shall be equipped with a coded module signal initiating circuit capable of manual operation at the control panel. The device shall sound an alarm signal distinct from the normal fire alarm signal and shall be used as designated by the Owner.

E. Activation of the alarm silence/acknowledge switch shall silence the alarm signal and cause the flashing L.E.D. to revert to a steady state of illumination. Upon occurrence of a subsequent alarm in a different zone, the alarm signal shall resound until silenced. The alarm and detection systems shall b A.D.T. 4520 Series equipment or equal.

PART 2 - PRODUCTS

A. Smoke detectors shall be solid state, photelectronic type operating on the light scattering principle. Detector shall be factory preset to detect smoke at a nominal one and one-half percent (1.5%) light obscuration per foot, equipped with self-compensating circuitry for maximum stability. An alarm condition shall be indicated by a red L.E.D. capable of being remote annunciated. Unit shall have a 135^0F fixed thermal detector built-in, which shall have an built-in calibrated test feature, and shall be UL listed and F.M. approved. Smoke detector shall be an A.D.T. 3521 Series device or equal.

B. Air duct smoke detectors shall operate on a cross-sectional air sampling principle to compensate for and overcome stratification and the skin effect. Duct detector shall consist of a standard photoelectric detector mounted in an air duct sampling assembly and tube that extends across the duct or plenum of the ventilating unit. The air duct detector shall be installed in the duct where indicated on the drawings in accordance with the manufacturer=s instructions, and FNPA 90A Methods. Air duct detector shall be UL listed and F.M. approved A.D.T. 3527 Series device or equal.

C. Thermal heat detectors shall be fixed temperature only or combination fixed temperature/rate of use devices as indicated on the drawings. The fixed temperature portion shall operate when the device reaches its rated temperature. mThe rate of rise portion of the detector shall operate when its temperature is increased at the rate of rise 15^0F/minute, or greater. Thermal detector shall be UL

listed, A.D.T. 4220 Series devices or equal.

D. Manual pull stations shall be non-coded, dual-action type. The station shall provide mechanical indication of operation. Operating handle shall be recessed to prevent accidental operation, and shall be UL listed and F.M. approved, A.D.T. 5050 Series devices or equal.

E. Horn/strobe alarm devices shall be white lens with the AFIRE@ lettered, thereon, visible through 1800 field of view, A.D.T. type 340824 or equal. Where construction restrictions prohibit full recessing, an A.D.T. P42038 or equal semi-flush (SF) plate shall be provided. Mounted of units shall be on an standard 4" square electrical box.

F. Relays shall be 30 ampere rated, 24 volt D.C. coil voltage, single pole, double throw, Detral Series Model 900, mounted in a Hoffman 6" X 6" X 3" hinged cover cutout box, catalog number AHE, gray enamel finish. Provide 12 volt D.C. coils where required to accommodate existing computer room alarm panels.

G. Water-flow switches shall be suitable for wet pipe installation with a built-in time delay to prevent activation by water hammer or surges, A.D.T. WF5 Series or equal.

H. Tamper switches shall be S.P.D.T., suitable to coordinate with type of valve where installed.

I. Annunciators (remote) shall be zone supervision for all zone circuits as shown on the drawings, and shall contain accommodations for ten (10) future zone expansions. Annunciators shall be serial type A.D.T. Model GA-50 or equal. Mounted shall be flush or semi-flush as designated, housed in a custom-hinged cabinet. The unit shall include supervised alarm indicators with audible alarm and key reset/key lamp switch.

J. End of line devices (E.O.L.) shall be provided as required to ensure system integrity.

K. Moisture detectors shall be A.D.T. #3691 or equal.

Manufacturers:

A. A.D.T., Simplex, Honeywell, Notifier, Pyrotronics, FCI, and other meeting these guidelines and approved by GSC may be acceptable for installation.

Installation:

A. All wiring system junction and outlet boxes, tamper switches, flow alarm switches, duct-mounted smoke detectors shall be identified by means of self-adhesive-backed, preprinted, color-coded, vinyl labels indicating system and function. ADymo@ type labeling machine strips will not be acceptable unless riveted or screwed to surfaces.

B. All fire alarm system wiring shall be installed in conduit and shall be isolated from other systems. It shall be the explicit responsibility of the contractor to verify that adequate wire quantities are

provided so as to fulfill the AOperations@ paragraph of the specification.

C. The work shall be carefully laid out in advance, and where cutting, chasing or drilling of floors, walls, partitions, ceilings or other surfaces is necessary for the proper installation, support or anchorage of the conduit or other work this work shall be carefully done, and any damage to the buildings, piping or equipment shall be repaired and refinished by skilled mechanics of the respective trade required at no additional cost to the Owner.

Submittals, Shop Drawings:

A. Shop drawings and product data for the fire alarm system shall be submitted as required under the Electrical General Provisions Section and shall include;

B. Trunk cable schematic showing transponder locations and all truck data.

C. List of connected data points, including transponders to which they are connected, and input devices.

D. Technical specification data sheets of each system components.

Maintenance Manuals and Instructions:

A. Provide maintenance manuals as specified in the Electrical General Provisions Section and include final corrected copies of system diagrams that include all changes and additions made prior to completion of the installation.

B. Furnish necessary sections of instruction for the Owner=s maintenance and system operating personnel.

C. Tests: After installation is complete and at such time as directed by the Owner, the contractor shall conduct a complete system operating requirements of this specification; that individual conductors of all circuits are free of grounds, shorts and breaks. This test shall include the complete cycling of all fire, smoke, flow, etc. The test shall be repeated at a later date for the State Certifying authorities.

PART 3 - EXECUTION

General:

A. The entire installation shall comply with N.E.C. and all applicable provisions of Section 16. All wiring shall be in E.M.T. conduit. Wherever possible the existing conduit in the respective facilities shall be reused.

Qualifications of Installer:

A. The system shall be installed by an experienced firm regularly engaged in the installation of automatic fire-detection and alarm systems in accordance with the National Fire Protection Association. Approval of the installer will not relieve the contractor from his responsibilities to perform all work in accordance with the specifications and contract terms.

Installing Contractor:

A. The fire alarm equipment supplier shall be licensed by the State of Texas to sell service and install fire alarm systems and shall have been engaged in the business on a full-time basis for a minimum of five (5) years. The alarm system shall be installed under the supervision of a licensed fire alarm system installation superintendent.

Record and As-Built Drawings:

A. Upon completion of the installation and prior to final inspection, the contractor shall furnish four (4) copies of record drawings that show where detectors are installed. The AAs-Built@ drawings shall show by number, the detector in the exact sequence in which they are installed on the circuit.

Guarantee:

A. The fire alarm systems shall be guaranteed for a period of one (1) year from date of acceptance. The guarantee shall include equipment and systems parts, and all labor and workmanship. At the time of bidding, furnish a quotation for providing a one (1) year maintenance agreement for all building fire alarm systems within the scope of these guidelines and a subsequent quotation for an additional one (1) year renewal of the maintenance agreement.

End of Section 28 31 00

SECTION 310510 – SITE PREPARATION

DIVISION I specification sections, as indexed, shall also apply to this section.

SCOPE: Furnish all plant, equipment, labor, materials and supervision required for the preparation of site and protection to adjacent existing properties and utilities to remain in place during construction.

I. SITE PREPARATION

It is recommended that topsoil, vegetation, roots, and any soft soils in the construction areas be stripped from the site and either wasted or stockpiled (with EPIA permission only) for later use. Additional amounts of subgrade soils shall be removed to allow for the desired amount of select fill. The depth of removal shall be determined by a representative of the Geotechnical Engineer at the time of construction.

After removal of the existing pavement, exposed subgrade shall be proof-rolled with a loaded tandem axle dump truck, water truck or equivalent. Soils which are observed to rut or deflect excessively (greater than 1 inch) under the moving load shall be undercut and replaced with properly compacted fill. The proof-rolling and undercutting activities shall be witnessed by a representative of the Geotechnical Engineer and shall be performed during a period of dry weather.

After excavating and proof-rolling, the exposed subgrade shall be scarified to a depth of at least 8-inches, be uniformly moisture conditioned to near optimum moisture content throughout the scarified section and then be compacted to at least 95 percent of the soils maximum dry density per ASTM D1557. Engineered structural fill placement may then begin; the first layer of engineered structural fill shall be placed in a uniformly horizontal lift and be adequately keyed into the stripped and scarified subgrade soils. The compacted Engineered Fill may then be brought to finished grade in lifts not to exceed 6 inches in compacted thickness as required.

Existing soils that will support compacted Select Fill, concrete aprons, asphaltic/concrete pavement, ramps, rip-rap, etc. shall be cleared of all miscellaneous concrete, vegetation, organic matter, topsoil, construction debris, and/or foreign matter and materials that are greater than 3-inches in size. Select Fill materials shall be placed in equal continuous layers not exceeding eight (8) inches uncompacted depth and shall be compacted within the range of ±2 percent of optimum moisture content for cohesionless soils, as per ASTM D1557. The Select Fill shall have a liquid limit less than 40 and the plasticity index shall not exceed 12.

Monitoring of the backfilling should include sufficient compaction testing by the Geotechnical Engineering representative to document each lift of fill has been compacted to the required density. Should any lift or portion of a lift not conform to the density requirements, the lift shall be thoroughly scarified and recompacted until the required density is obtained. If water must be added, it should be uniformly applied and thoroughly mixed into the soil by disking or scarifying. Each lift of compacted engineered fill shall be tested by a representative of the Geotechnical Engineer prior to placement of subsequent lifts. Care should be taken to apply compaction efforts throughout the fill and fill slope areas. The moisture content and the degree of compaction of the structural fill soils shall be maintained until the construction of the structures are completed.

END OF SECTION 310510

SECTION 311100 - SITE CLEARING

PART 1 GENERAL

1.1 SECTION INCLUDES

A. Remove surface debris.

B. Remove paving, curbs, and other site improvements indicated on Drawings.

C. Clear site of plant life and grass as indicated on Drawings.

D. Remove trees and shrubs (if applicable).

E. Remove root system of trees and shrubs (if applicable).

F. Topsoil excavation.

1.2 RELATED SECTIONS

A. Section 312213 – Site Rough Grading.

1.3 REGULATORY REQUIREMENTS

A. Conform to applicable code for disposal of debris and for use of herbicides.

B. Coordinate clearing Work with utility companies.

PART 2 PRODUCTS

2.1 MATERIALS

A. Herbicide: An environmentally friendly, EPA approved, safe herbicide must be applied, as per manufacturer's specifications, to the crushed limestone base course material prior to placing asphalt material. Herbicide shall be Sahara DG Herbicide or Engineer approved equivalent.

1. Cautions:

a. Apply herbicides, in any form, in strict accordance with the label instructions. The label provides complete specifications regarding the chemical content and directions for use of the herbicide. It is important to read the label carefully and then precisely follow instructions to assure the effectiveness and safety of the process.

b. After treatment is complete, it is important to pave the base course as soon as possible.

c. It is advisable to plant new vegetation, such as trees, shrubs, and flowers, sufficiently far from the sterilized area to protect their root systems from becoming contaminated by the herbicide.

d. Liquid herbicides can be carried by the wind during application. Should this occur, it could severely damage vegetation adjacent to the construction site. Never attempt to apply liquid herbicides when there are strong breezes or when rain is imminent.

e. Herbicides shall not be applied when EPIA or City of El Paso personnel and the general public are present. Contractor shall schedule this application during appropriate hours/times of day so as not to create a hazardous condition to the public.

f. Do not apply liquid herbicides to water saturated soils such as may exist after a rainfall.

g. Areas adjacent to surfaces where approved herbicide will be applied to shall be protected from overspray.

PART 3 EXECUTION

3.1 PREPARATION

A. Verify that existing plant life designated to remain is tagged or identified.

3.2 PROTECTION

A. Locate, identify, and protect from damage all utilities that are to remain. Contact utility locator service prior to commencing work. Contractor shall be responsible for field locating all utilities prior to starting site clearing and excavation.

B. Protect trees, plant growth and features designated to remain as final landscaping.

C. Protect benchmarks and existing structures from damage or displacement.

D. Conduct site operations to ensure minimum interference with roads, streets, walks, aprons, and adjacent occupied facilities. Protect improvements adjoining site.

3.3 CLEARING

A. Prior to the addition of fill onto the existing grade, the site shall be stripped of all vegetation, loose topsoil and demolition debris to a minimum depth of two (2) inches below existing grade. Due to presence of loose to very loose soils, soils within the development areas of the site shall be proof rolled in the presence and approved by the Geotechnical Engineer. Any soil that ruts or shows signs of instability shall be removed or compacted in place to at least 95 percent of the soil's maximum dry density as per ASTM D-1557. Consult with Project Geotechnical Engineer.

B. Clear areas required for access to site and execution of Work.

C. Remove paving, curbs, and other site improvements indicated on Drawings. All existing paving that will connect to proposed paving shall be sawcut to insure a smooth and uniform connection.

D. Completely remove roots with a diameter greater than 1 inch or small roots in high density. Any voids resulting from removal of vegetation, roots, and debris shall be backfilled with suitable, compacted fill materials, free of organics, degradable material, and particles exceeding three (3) inches in size.

E. Remove trees and shrubs indicated. Remove stumps, main root ball, and root system to a depth of 12 inches (minimum).

F. Clear undergrowth and deadwood, without disturbing subsoils.

G. Apply an approved herbicide to remaining stumps to inhibit growth.

3.4 REMOVAL

A. Remove debris, rock, and extracted plant life from site.

3.5 TOPSOIL EXCAVATION

A. Excavate topsoil from areas to be further excavated, re-landscaped, or re-graded.

B. Stockpile in area designated on site (with approval of EPIA only) to depth not exceeding 8 feet. Protect from erosion. Remove excess topsoil not being re-used from site and dispose of in accordance with applicable regulatory requirements.

END OF SECTION 311100

SECTION 312000 – EXCAVATING

I. GENERAL

A. SECTION INCLUDES

1. Excavating for building structures, storm drainage pipes, utilities, drainage structures, and other site improvements.

B. RELATED SECTIONS

1. Section 312213 – Site Rough Grading.

2. Section 312313.13 – Backfilling.

C. FIELD MEASUREMENTS

1. Verify that benchmark and required elevations for the Work are as indicated on Drawings.

II. PRODUCTS

Not Used.

III. EXECUTION

A. PREPARATION

1. Identify required lines, levels, contours, and datum locations.

2. Locate, identify, and protect utilities that are to remain from damage.

3. Notify appropriate utility companies as necessary to remove and/or relocate utilities.

4. Protect fiber optic lines within limits of the Project (if applicable). Contact the appropriate utility company for the exact location of each respective utility.

5. Protect plant life, lawns, and other features remaining as a portion of final landscaping.

6. Protect benchmarks, survey control points, existing structures, fences, walls, sidewalks, ditch lining, asphaltic pavement, concrete drainage structures, and rip-rap from excavating equipment and vehicular traffic.

B. EXCAVATING

1. Underpin adjacent structures that may be damaged by excavating work.

2. Excavate subsoil to accommodate foundations, concrete flatwork, asphalt and concrete pavement, rip-rap, site drainage structures and construction operations.

3. Loose and/or softsoil conditions on-site are considered to be moisture sensitive and have the potential for significant differential movements with changing loading and moisture

conditions. Treatment of the loose soil zones is required to adequately support the proposed structures. Refer to Geotechnical Investigation for additional recommendations.

4. If the exposed subgrade soils consist of clay soils, it is recommended that these soils be completely removed and replaced with Select Fill.

5. Slope banks with machine to angle of repose or less until shored.

6. Do not interfere with 45 degree bearing splay of foundations.

7. Grade top perimeter of excavation to prevent surface water from draining into excavation.

8. Hand trim excavation. Remove loose matter.

9. Remove lumped subsoil, boulders, and rock up to 1/3 cubic yards measured by volume.

10. Notify Engineer of unexpected subsurface conditions and discontinue Work in effected area until notified by Engineer to resume work.

11. Correct areas over excavation in accordance with Section 312313.13.

12. Stockpile excavated material in area designated on site. Remove excess or unsuitable material from site and dispose of in accordance with applicable regulations.

13. For additional recommendations on excavation of material refer to the Geotechnical Investigation.

C. CEMENT TREATMENT OF SUBGRADE SOILS

1. Should the Contractor not be able to obtain the minimum compaction requirement of 95% of the maximum dry density as determined by ASTM D1557 for existing subgrade soils, then cement stabilization treatment can be used to obtain the required compaction. The process of adding cement for treating subgrade soils shall include pulverizing the subgrade to a depth of at least six (6) inches. Portland Cement shall be added at a rate of about 6 to 10 percent (by weight or as needed to produce the desired stability) to the pulverized subgrade soil. The mixture shall then be moisture conditioned by adding water to the mixture (not to exceed the optimum moisture content of the soil cement mixture as determined by ASTM D558) before compacting the mixture to a minimum dry density of 95 percent of the maximum dry density as determined by ASTM D1557 and then curing. Traffic (construction or otherwise) shall not be allowed onto the treated subgrade for a minimum of seven (7) days. In addition, the Contractor must keep the cement treated subgrade moist during the curing period. As such, the Contractor shall have a sufficient means to obtain, store, and apply water throughout the curing period. Consult with Project Geotechnical Engineer for cement treatment of subgrade soils.

D. FIELD QUALITY CONTROL

1. Provide for visual inspection of bearing surfaces by Engineer.

E. PROTECTION

1. Prevent displacement or loose soil from falling into excavation; maintain soil stability.

2. Protect bottom of excavations and soil adjacent to and beneath pavements, rip-rap, and concrete flatwork from freezing.

END OF SECTION 312000

SECTION 312213 - SITE ROUGH GRADING

PART 1 GENERAL

1.1 SECTION INCLUDES

A. Removal of topsoil and subsoil.

B. Site cutting, filling, rough grading and compacting for pavements, drainage structures, concrete flatwork, and site structures.

C. Refer to Geotechnical Investigation for additional requirements.

1.2 RELATED SECTIONS

A. Section 311100 – Site Clearing.

B. Section 312323 – Soil Materials.

C. Section 312316 – Excavation.

D. Section 312313.13 – Backfilling.

1.3 REFERENCES

A. ASTM C136 – Method for Sieve Analysis of Fine and Coarse Aggregates.

B. ASTM D1557 – Test Methods for Moisture-Density Relations of Soils and Soil-Aggregate Mixtures using 10 lb. (4.54 kg) Rammer and 18 inch (457 mm) Drop.

C. ASTM D2922 – Test Methods for Density of Soil and Soil-Aggregate in Place by Nuclear Methods (Shallow Depth).

D. ASTM D3017 – Test Methods for Moisture Content of Soil and Soil-Aggregate Mixtures.

1.4 QUALITY ASSURANCE

A. Perform Work in accordance with the City of El Paso Guidelines.

B. Refer to Geotechnical Investigation for additional requirements.

PART 2 PRODUCTS

2.1 MATERIALS

A. Structural Fill: As specified in the Section 312323 – Soil Materials.

PART 3 EXECUTION

3.1 EXAMINATION

A. The Contractor is expected to examine the site and determine for himself the character of materials to be encountered.

B. Verify that survey benchmark and intended elevations for the Work are as indicated on Project Documents.

3.2 PREPARATION

A. Identify required lines, levels, contours, and datum.

B. Stake and flag locations of existing utilities.

C. Locate, identify, and protect from damage all utilities that are to remain.

D. Notify appropriate utility companies to remove and/or relocate existing utilities as necessary.

E. Protect above and below grade utilities that are to remain.

F. Protect plant life, lawns, and other features that are to remain as a portion of final landscaping.

G. Protect benchmarks, survey control points, and existing structures, fences, sidewalks, paving, and curbs/gutters from excavating equipment and vehicular traffic.

3.3 SUBSOIL EXCAVATION

A. Excavate subsoil from areas to be further excavated, re-landscaped, or re-graded.

B. Do not excavate wet subsoil.

C. When excavating through roots, perform work by hand and cut roots with sharp ax.

D. Stockpile in area designated by Architect/Engineer on site to depth not exceeding 8 feet and protect from erosion.

E. Stability: Replace damaged or displaced subsoil to same requirements as for specified fill.

F. Following site stripping and lowering of site grades, subgrade soils within the development areas of the site shall be proof rolled in the presence and approved by the Geotechnical Engineer. Any soil that ruts or shows signs of instability should be removed or compacted in place to at least 95 percent of the soil's maximum dry density as per ASTM D-1557. Consult with Project Geotechnical Engineer.

3.4 FILLING

A. Fill areas with unfrozen materials to contours and elevations indicated in Drawings.

B. Place select fill material in loose lifts not exceeding 8 inches in thickness, water as necessary and compact in accordance with the schedule at end of this section.

C. Maintain ±2 percent optimum moisture content of fill materials to attain required compaction.

D. Grade the slope away from buildings (new and existing) a minimum of ±2 percent unless noted otherwise.

E. Make grade changes gradual. Blend slope into level areas.

F. Remove surplus fill materials from site and dispose of in accordance with applicable regulations.

G. Slopes steeper than 1 vertical to 3 horizontal shall be protected from erosion.

3.5 TOLERANCES

A. Top Surface of Subgrade: Plus or minus 1/10 foot from required elevation.

3.6 FIELD QUALITY CONTROL

A. Testing: In accordance with ASTM D1557, ASTM D2922, and ASTM D3017.

B. If tests indicate Work does not meet specified requirements, remove Work, replace and retest.

C. Frequency of Tests:

1. At least one (1) moisture-density (Proctor) test, Atterberg limits test and percent finer than #200 sieve test per soils type for subgrade, backfill, fill, and base materials, according to ASTM D422, D423, and D424

2. In pavement areas, at least one (1) density and moisture content test per 2,500 square feet of surface area on subgrade soils for each compacted six (6) inch thickness of fill.

3. In pavement areas, backfilled trenches should be at least one (1) density and moisture content test per fifty (50) linear feet of trench per six (6) inch compacted fill thickness.

4. At least four (4) densities and moisture content tests should be performed in the building area on the subgrade soils.

5. At least four (4) densities and moisture content tests should be performed per six (6) inch compacted thickness of fill in the building area.

6. At least one (1) density and moisture content tests should be performed per fifty (50) linear feet of trench per six (6) inch compacted fill thickness. Consult with Project Geotechnical Engineer and/or review Geotechnical Investigation for frequency of testing prior to bidding and construction.

3.7 SCHEDULES

A. Subgrade Preparation:

1. Sub-excavate areas as required above.

2. All exposed native subgrade shall be thoroughly proofrolled in order to locate and densify any weak, compressible zones. Weak or soft areas identified during proofrolling

operations, shall be removed and replaced with suitable, compacted on-site silty sands, free of organics, oversized materials, and degradable or deleterious materials.

3. Sufficient passes shall be made to develop a minimum dry density of 95 percent based on ASTM D1557 to a depth of 8 inches below the exposed subgrade.

4. The exposed subgrade shall be scarified to a depth of at least 8-inches, then moisture conditioned to near optimum moisture content and then be compacted to at least 95 percent of the modified Proctor maximum dry density ASTM D1557. Engineered structural fill placement may then begin; the first layer of engineered structural fill shall be placed in a uniformly horizontal lift and be adequately keyed into the stripped and scarified subgrade soils.

   Existing soils that will support compacted Select Fill, concrete aprons, ramps, rip-rap, pavements, etc. should be cleared of all miscellaneous concrete, vegetation, organic matter, topsoil, construction debris, and/or foreign matter and materials that are greater than 3-inches in size. Fill materials should be placed in maximum lifts of 8-inches of loose material and should be compacted within the range of ±2 percent of optimum moisture content for cohesionless soils, as per ASTM D1557. The Select Fill should have a liquid limit less than 40 and the plasticity index shall not exceed 12.

   Monitoring of the backfilling should include sufficient compaction testing by the Geotechnical Engineering representative to document each lift of fill has been compacted to the required density. Should any lift or portion of a lift not conform to the density requirements, the lift shall be thoroughly scarified and recompacted until the required density is obtained. If water must be added, it shall be uniformly applied and thoroughly mixed into the soil by disking or scarifying. Each lift of compacted engineered fill shall be tested by a representative of the Geotechnical Engineer prior to placement of subsequent lifts. Care shall be taken to apply compaction efforts throughout the fill and fill slope areas. The moisture content and the degree of compaction of the structural fill soils shall be maintained until the construction of the structures are completed.

B. Fill:

1. Fill shall be placed in maximum lifts of 8 inches of loose material and shall be compacted as per ASTM D 1557.

2. Compact to minimum 95 percent of maximum density as per ASTM D1557.

END OF SECTION 312213

SECTION 31 23 00 – EXCAVATION AND FILL

PART 1 - GENERAL

1.1 RELATED DOCUMENTS

A. Drawings and general provisions of Contract, including General and Supplementary Conditions and Division 1 Specification Sections, apply to this Section.

1.2 SUMMARY

A. This Section includes the following:

1. Preparing of subgrade for building slabs.

2. Excavating and backfilling of trenches within building lines.

3. Excavating and backfilling for underground mechanical and electrical utilities and buried mechanical and electrical appurtenances.

1.3 DEFINITIONS

A. Excavation consists of removal of material encountered to subgrade elevations indicated and subsequent disposal of materials removed.

B. Unauthorized excavation consists of removal of materials beyond indicated subgrade elevations or dimensions without specific direction of Architect. Unauthorized excavation, as well as remedial work directed by Architect, shall be at Contractor's expense.

1. Under footings or retaining walls, fill unauthorized excavation by extending indicated bottom elevation of footing to excavation bottom, without altering required top elevation. Lean concrete fill may be used to elevations to proper position, when acceptable to Architect.

2. In locations other than those above backfill compact unauthorized excavations as specified for authorized excavations of same classification, unless otherwise directed by Architect.

C. Additional Excavation: When excavation has reached required subgrade elevations, notify Architect, who will make an inspection of conditions. If Architect determines that bearing materials at required subgrade elevations are unsuitable, continue excavation until suitable bearing materials are encountered and replace excavated material as directed by Architect. The Contract Sum may be adjusted by an appropriate Contract Modification.

1. Removal of unsuitable material and its replacement as directed will be paid on basis of Conditions of the Contract relative to changes in work.

D. Subgrade: The undisturbed earth or the compacted soil layer immediately below granular subbase or topsoil materials.

E. Building Pad: The building pad is defined by a line 5'-0" minimum beyond the exterior face of the continuos footing when measured at the bottom of the sub-excavation.

F. Structure: Buildings, foundations, slabs, curbs, or other man- made stationary features occurring above or below ground surface.

1.4 QUALITY ASSURANCE

A. Codes and Standards: Perform excavation work in compliance with applicable requirements of authorities having jurisdiction.

B. Testing and Inspection Service: Owner will employ and pay for a qualified independent geotechnical testing and inspection laboratory to perform soil testing and inspection service during earthwork operations.

1.5 PROJECT CONDITIONS

A. Site Information: Data in subsurface investigation reports was used for the basis of the design and are available to the Contractor for information only. Conditions are not intended as representations or warranties of accuracy or continuity between soil borings. The Owner will not be responsible for interpretations or conclusions drawn from this data by Contractor.

1. Additional test borings and other exploratory operations may be performed by Contractor, at the Contractor's option; however, no change in the Contract Sum will be authorized for such additional exploration.

B. Existing Utilities: Locate existing underground utilities in areas of excavation work. If utilities are indicated to remain in place, provide adequate means of support and protection during earthwork operations.

1. Should uncharted, or incorrectly charted, piping or other utilities be encountered during excavation, consult utility owner immediately for directions. Cooperate with Owner and utility companies in keeping respective services and facilities in operation. Repair damaged utilities to satisfaction of utility owner.

2. Do not interrupt existing utilities serving facilities occupied by Owner or others, during occupied hours, except when permitted in writing by Architect and then only after acceptable temporary utility services have been provided.

(1) Provide minimum of 48-hour notice to Architect, and receive written notice to proceed before interrupting any utility.

3. Demolish and completely remove from site existing underground utilities indicated to be removed. Coordinate with utility companies for shutoff of services if lines are active.

C. Use of Explosives: Use of explosives is not permitted.

D. Protection of Persons and Property: Barricade open excavations occurring as part of this work and post with warning lights.

1. Operate warning lights as recommended by authorities having jurisdiction.

2. Protect structures, utilities, sidewalks, pavements, and other facilities from damage caused by settlement, lateral movement, undermining, washout, and other hazards created by earthwork operations.

3. Perform excavation by hand within dripline of large trees to the greatest extent possible. Maintain moist condition for root system and cover exposed roots with moistened burlap.

PART 2 - PRODUCTS

2.1 SOIL MATERIALS

A. Satisfactory soil materials are defined as those complying with ASTM D2487 soil classification groups GW, GP, GC, GM, GC-GM, GP-GM, GP-GC, SW, SP, SC, SM, SC-SM, SP-SM, SP-SC.

B. Unsatisfactory soil materials are defined as those complying with ASTM D2487 soil classification groups PT, OL, OH, ML, MH, CL, and CH where the plasticity index exceeds 18.

C. Subbase Material: Naturally or artificially graded mixture of natural or crushed gravel, crushed stone, crushed slag, and natural or crushed sand.

D. Backfill and Fill Materials: Satisfactory soil materials free of clay, rock or gravel larger than 4 inches in any dimension, debris, waste, frozen materials, vegetation and other deleterious matter.

PART 3 - EXECUTION

3.1 SITE PREPARATION

A. General: Remove existing paving vegetation, debris and unsatisfactory materials for ground surface under the building pad. This material shall be removed and disposed of as here-in specified.

B. Building Pad: The existing soils throughout the entire building pad shall be excavated to the elevation noted on the drawings. Excavated soils are not suitable for reuse as fill material and shall be disposed of as here in specified. The thus exposed subgrade shall be scarified and recompacted as here in specified. The entire building pad shall then be brought to grade using fill materials and procedures as here in specified.

3.2 EXCAVATION

A. Excavation is unclassified and includes excavation to subgrade elevations indicated, regardless of character of materials and obstructions encountered.

3.3 STABILITY OF EXCAVATIONS

A. General: Comply with local codes, ordinances, and requirements of agencies having jurisdiction.

B. Slope sides of excavations to comply with local codes, ordinances, and requirements of agencies having jurisdiction. Shore and brace where sloping is not possible because of space restrictions or stability of material excavated. Maintain sides and slopes of excavations in safe condition until completion of backfilling.

3.4 DEWATERING

A. Prevent surface water and subsurface or ground water from flowing into excavations and from flooding project site and surrounding area.

1. Do not allow water to accumulate in excavations. Remove water to prevent softening of foundation bottoms, undercutting footings, and soil changes detrimental to stability of subgrades and foundations. Provide and maintain pumps, well points, sumps, suction and discharge lines, and other dewatering system components necessary to convey water away from excavations.

2. Establish and maintain temporary drainage ditches and other diversions outside excavation limits to convey rain water and water removed from excavations to collecting or runoff areas. Do not use trench excavations as temporary drainage ditches.

3.5 EXCAVATION FOR STRUCTURES

A. Conform to elevations and dimensions shown within a tolerance of plus or minus 0.10 foot, and extending a sufficient distance from footings and foundations to permit placing and removal of concrete formwork, installation of services, and other construction and for inspection.

1. Excavations for footings and foundations: Do not disturb bottom of excavation. Excavate by hand to final grade, trim bottoms to required lines and grades and prior to placement of the reinforcement and concrete, the base shall be compacted as herein specified.

2. Excavation for Underground Mechanical or Electrical Structures: Conform to elevations and dimensions indicated within a tolerance of plus or minus 0.10 foot; plus a sufficient distance to permit placing and removal of concrete formwork, installation of services, and other construction and for inspection. Do not disturb bottom of excavations, intended for bearing surface.

3.6 TRENCH EXCAVATION FOR PIPES AND CONDUIT

A. Excavate trenches to uniform width, sufficiently wide to provide ample working room and a minimum of 6 to 9 inches of clearance on both sides of pipe or conduit.

B. Excavate trenches and conduit to depth indicated or required to establish indicated slope and invert elevations and to support bottom of pipe or conduit on undisturbed soil. Beyond building perimeter, excavate trenches to allow installation of top of pipe below frost line.

1. For pipes or conduit less than 6 inches in nominal size, and for flat-bottomed, multiple-duct conduit units, do not excavate beyond indicated depths. Hand-excavate bottom cut to accurate elevations and support pipe or conduit on undisturbed soil.

2. For pipes and equipment 6 inches or larger in nominal size, shape bottom of trench to fit bottom of pipe for 90 degrees (bottom 1/4 of the circumference). Fill depressions with tamped sand backfill. At each pipe joint, dig bell holes to relieve pipe bell of loads ensure continuous bearing of pipe barrel on bearing surface.

3.7 COLD WEATHER PROTECTION

A. Protect excavation bottoms against freezing when atmospheric temperature is less than 35 degrees F.

3.8 BACKFILL AND FILL

A. General: Place soil material in layers to required subgrade elevations, for each area classification listed below, using materials specified in Part 2 of this Section.

1. Under building slabs, borrow material.

2. Under piping and conduit and equipment, use subbase materials where required correction of unauthorized excavation. Shape excavation bottom to fit bottom 90 degrees of cylinder.

3. Backfill trenches with concrete where trench excavations pass within 18 inches of column or wall footings and that are carried below bottom of such footings or that pass under wall footings. Place concrete to level of bottom of adjacent footing.

(1) Concrete is specified in Division 3.

(2) Do not backfill trenches until tests and inspections have been made and backfilling is authorized by Architect. Use care in backfilling to avoid damage or displacement of pipe systems.

4. Provide 4-inch-thick concrete base slab support for piping or conduit less than 2'-6" below surface of roadways. After installation and testing of piping or conduit, provide minimum 4-inch-thick encasement (sides and top) of concrete prior to backfilling or placement of roadway subbase.

B. Backfill excavations as promptly as work permits, but not until completion of the following:

1. Acceptance of construction below finish grade including, where applicable, dampproofing, waterproofing, and perimeter insulation.

2. Inspection, testing, approval, and recording locations of underground utilities have been performed and recorded.

3. Removal of concrete formwork.

4. Removal of trash and debris from excavation.

C. Place backfill and fill materials in layers not more than 8 inches in loose depth for material compacted by heavy compaction equipment, and not more than 4 inches in loose depth for material compacted by hand-operated tampers.

D. Before compaction, moisten or aerate each layer as necessary to provide optimum moisture content. Compact each layer to required percentage of maximum dry density or relative dry density for each area classification. Do not place backfill or fill material on surfaces that are muddy, frozen, or contain frost or ice.

E. Place backfill and fill materials evenly adjacent to structures, piping, or conduit to required elevations. Prevent wedging action of backfill against structures or displacement of piping or conduit by carrying material uniformly around structure, piping, or conduit to approximately same elevation in each lift.

F. Control soil and fill compaction, providing minimum percentage of density specified for each area classification indicated below. Correct improperly compacted areas or lifts as directed by Architect if soil density tests indicate inadequate compaction.

1. Percentage of Maximum Density Requirements: Compact soil to not less than the following percentages of maximum density, in accordance with ASTM D 1557:

(1) Under structures, building slabs and steps, and pavements, compact top 12 inches of subgrade and each layer of backfill or fill material at 95 percent maximum density.

(2) Under lawn or unpaved areas, compact top 6 inches of subgrade and each layer of backfill or fill material at 90 percent maximum density.

(3) Under walkways, compact top 6 inches of subgrade and each layer of backfill or fill material at 95 percent maximum density.

2. Moisture Control: Where subgrade or layer of soil material must be moisture conditioned before compaction, uniformly apply water to surface of subgrade or layer of soil material. Apply water in minimum quantity as necessary to prevent free water from appearing on surface during or subsequent to compaction operations.

(1) Remove and replace, or scarify and air dry, soil material that is too wet to permit compaction to specified density.

(2) Stockpile or spread soil material that has been removed because it is too wet to permit compaction. Assist drying by discing, harrowing, or pulverizing until moisture content is reduced to a satisfactory value.

3.9 GRADING

A. General: Uniformly grade areas within limits of grading under this section, including adjacent transition areas. Smooth finished surface within specified tolerances, compact with uniform levels or slopes between points where elevations are indicated, or between such points and existing grades.

B. Grading Surface of Fill Under Building Slabs: Grade smooth and even, free of voids, compacted as specified, and to required elevation. Provide final grades within a tolerance of 1/2 inch when tested with a 10-foot straightedge.

C. Compaction: After grading, compact subgrade surfaces to the depth and indicated percentage of maximum or relative density for each area classification.

3.10 FIELD QUALITY CONTROL

A. Quality Control Testing During Construction: Allow testing service to inspect and approve each subgrade and fill layer before further backfill or construction work is performed.

1. Perform field density tests in accordance with ASTM D 1556 (sand cone method) or ASTM D 2167 (rubber balloon method), as applicable.

(1) Field density tests may also be performed by the nuclear method in accordance with ASTM D 2922, providing that calibration curves are periodically checked and adjusted to correlate to tests performed using ASTM D 1556. In conjunction with each density calibration check, check the calibration curves furnished with the moisture gages in accordance with ASTM D 3017.

(2) If field tests are performed using nuclear methods, make calibration checks of both density and moisture gages at beginning of work, on each different type of material encountered, and at intervals as directed by the Architect.

2. Footing Subgrade: For each strata of soil on which footings will be placed, perform at least one test to verify required density. Subsequent verification and approval of each footing subgrade may be based on a visual comparison of each subgrade with related tested strata when acceptable to Architect.

3. Building Slab Subgrade: Perform at least one field density test of subgrade for every 2,000 sq. ft. of paved area or building slab, but in no case fewer that three tests. In each compacted fill layer, perform one field density test for every 2,000 sq. ft. of overlaying building slab or paved area, but in no case fewer than three tests.

4. Foundation Wall Backfill: Perform at least two field density tests at locations and elevations as directed.

5. If in opinion of Architect, based on testing service reports and inspection, subgrade or fills that have been placed are below specified density, perform additional compaction and testing until specified density is obtained.

3.11 EROSION CONTROL

A. Provide erosion control methods in accordance with requirements of authorities having jurisdiction.

3.12 MAINTENANCE

A. Protection of Graded Areas: Protect newly graded areas from traffic and erosion. Keep free of trash and debris.

B. Repair and reestablish grades in settled, eroded, and rutted areas to specified tolerances.

C. Reconditioning Compacted Areas: Where completed compacted areas are disturbed by subsequent construction operations or adverse weather, scarify surface, reshape, and compact to required density prior to further construction.

D. Settling: Where settling is measurable or observable at excavated areas during general project warranty period, remove surface (pavement, lawn, or other finish), add backfill material, compact, and replace surface treatment. Restore appearance, quality, and condition of surface or finish to match adjacent work, and eliminate evidence of restoration to greatest extent possible.

3.13 DISPOSAL OF EXCESS AND WASTE MATERIALS

A. Remove excess excavated material, trash, debris, and waste materials and dispose of it off Owner's property.

END OF SECTION 312300

SECTION 312313.13 - BACKFILLING

PART 1 GENERAL

1.1 SECTION INCLUDES

A. Site Filling and Backfilling to final subgrade elevations.

B. Fill under Buildings.

C. Fill under paving.

D. Fill for over-excavation.

1.2 RELATED SECTIONS

A. Section 312323 – Soil Materials.

B. Section 312316 – Excavation.

1.3 REFERENCES

A. ASTM D1557 – Test Methods for Moisture-Density Relations of Soils and Soil-Aggregate Mixtures Using 10 lb. (4.54 kg) Rammer and 18 inch (457 mm) Drop.

B. ASTM D2922 – Test methods for Density of Soil and Soil-Aggregate in Place by Nuclear Methods (Shallow Depth).

C. ASTM D3017 – Test Methods for Moisture Content of Soil and Soil-Aggregate Mixtures.

PART 2 PRODUCTS

2.1 FILL MATERIALS

A. Fill: As specified in Section 312323 - Soil Materials and Geotechnical Investigation. Consult with Project Geotechnical Engineer.

B. Cement Stabilized Backfill: Where cement stabilized backfill is shown on the Drawings, it shall consist of a mixture of soil and two sacks of Type I Portland Cement per cubic yard. Soil shall be classified as SW, SP or SM by the Unified Soil Classification System (USCS) of ASTM D2487, free from lumps, clods or organic material. If excavated material is not suitable, pit-run sand shall be used. Cement stabilized backfill shall be mixed in a concrete mixer or transit mixer.

PART 3 EXECUTION

3.1 EXAMINATION

A. Verify that subdrainage, damp-proofing, or waterproofing installation has been inspected and accepted by Architect.

B. Verify structural ability of unsupported walls to support loads imposed by any fill.

3.2 PREPARATION

A. Compact subgrade to density requirements for subsequent backfill materials.

B. Cut out areas with unsuitable material as indicated by the Geotechnical Investigation and any soft areas of subgrade not capable of compaction in place. Backfill with suitable material and compact to density equal to or greater than requirements for subsequent fill material. Refer to Section 312323 – Soil Materials for suitable material. Consult with Project Geotechnical Engineer for suitable materials.

C. Scarify and proof roll subgrade surface to a depth of 12 inches (minimum) to identify soft spots; fill and compact to density equal to or greater than requirements for subsequent fill material.

3.3 BACKFILLING

A. Backfill areas with unfrozen materials to required contours and elevations.

B. Systematically backfill to allow maximum time for natural settlement. Do not backfill over porous, wet, frozen or spongy subgrade surfaces.

C. Fill material shall preferably consist of clean to slightly silty or clayey fine sands or fine gravels free of organic or other deleterious materials, as defined by the Geotechnical Investigation, and no material greater than three (3) inches. Close moisture control will be required to achieve the recommended degree of compaction.

D. Place and compact material in loose lifts not exceeding 8 inches in thickness. Sufficient passes shall be made to develop a minimum dry density of 95 percent of the modified proctor maximum dry density (ASTM D1557). The moisture content of the fill shall be maintained within the range of 2 percentage points below to 2 percentage points above the optimum moisture content for cohesionless soils as per ASTM D 1557 until final compaction.

E. The edges of compacted fill should extend five (5) feet beyond the edges of the buildings prior to sloping. Care should be taken to apply compactive efforts throughout the fill and fill slope.

F. Employ a placement method that does not disturb or damage other work.

G. Maintain optimum moisture content of backfill materials to attain required compaction density.

H. Backfill against supported foundation walls. Do not backfill against unsupported foundation walls.

I. Backfill simultaneously on each side of unsupported foundation walls until supports are in place.

J. Grade slope away from building a minimum of ±2 percent, unless noted otherwise on Drawings.

K. Make gradual grade changes. Blend slope into level areas.

L. Remove surplus backfill materials from site and dispose of in accordance with applicable regulations.

M. Leave fill material stockpile areas free of excess fill materials.

3.4 TOLERANCES

A. Top Surface of Backfilling under Paved Areas, under Building Footprint and 5 feet beyond: Plus or minus 0.10 feet from required elevations.

B. Top Surface of General Backfilling: Plus or minimum 0.10 feet from required elevations.

3.5 FIELD QUALITY CONTROL

A. Compaction testing will be performed in accordance with ASTM D1557, ASTM D2922, and ASTM D3017.

B. If tests indicate Work does not meet specified requirements, remove Work, replace and retest, at no additional cost to the City of El Paso and/or EPIA.

C. Frequency of Tests:

1. At least one (1) moisture-density (Proctor) test, Atterberg limits test and percent finer than #200 sieve test per soils type for subgrade, backfill, fill, and base materials, according to ASTM D422, D423, and D424

2. In pavement areas, at least one (1) density and moisture content test per 2,500 square feet of surface area on subgrade soils for each compacted six (6) inch thickness of fill.

3. In pavement areas, backfilled trenches should be at least one (1) density and moisture content test per fifty (50) linear feet of trench per six (6) inch compacted fill thickness.

4. At least four (4) densities and moisture content tests should be performed in the building area on the subgrade soils.

5. At least four (4) densities and moisture content tests should be performed per six (6) inch compacted thickness of fill in the building area.

6. At least one (1) density and moisture content tests should be performed per fifty (50) linear feet of trench per six (6) inch compacted fill thickness. Consult with Project Geotechnical Engineer and/or Geotechnical Investigation for frequency of testing prior to bidding and construction.

3.6 PROTECTION OF FINISHED WORK

A. Protect finished Work under provisions of these specifications.

B. Reshape and re-compact fills subjected to vehicular traffic.

END OF SECTION 312313.13

SECTION 312316.13 - TRENCHING

PART 1 GENERAL

1.1 SECTION INCLUDES

A. Excavating trenches for storm sewer systems.

B. Compacted fill from top of pipe bedding.

C. Backfilling and compaction.

1.2 RELATED SECTIONS

A. Section 312323 – Soil Materials.

B. Section 312213 – Site Rough Grading.

C. Section 312000 – Excavating.

D. Section 312323.13 – Backfilling.

1.3 REFERENCES

A. ASTM C136 – Method for Sieve Analysis of Fine and Coarse Aggregates.

B. ASTM D1557 – Test Methods for Moisture-Density Relations of Soils and Soil-Aggregate Mixtures Using 10 lb. (4.54 kg) Rammer and 18 inch (457 mm) Drop.

C. ASTM D2922 – Test Methods for Density of Soil and Soil-Aggregate in Place by Nuclear Methods (Shallow Depth).

D. ASTM D3017 – Test Methods for Moisture Content of Soil and Soil-Aggregate Mixtures.

1.4 DEFINITIONS

A. Subsurface Pipe: Any buried storm sewer systems.

1.5 FIELD MEASUREMENTS

A. Verify that survey benchmark, control point, and intended elevations for the Work are as shown on drawings.

1.6 COORDINATION

A. Verify work associated with lower elevation pipes is complete before placing higher elevation pipes.

PART 2 PRODUCTS

2.1 FILL MATERIALS

A. As specified in Section 312323 - Soil Materials.

B. Cement Stabilized Backfill: Where cement stabilized backfill is shown on the Drawings, it shall consist of a mixture of soil and two sacks of Type I Portland Cement per cubic yard. Soil shall be classified as SW, SP, or SM by the Unified Soil Classification System (UCSC) of ASTM D2487, free from lumps, clods or organic material. If excavated material is not suitable, pit-run sand shall be used. Cement stabilized backfill shall be mixed in a concrete mixer or transit mixer.

PART 3 EXECUTION

3.1 PREPARATION

A. Identify required lines, levels, contours, and datum locations.

B. Protect plant life, lawns and other features remaining as a portion of final landscaping.

C. Protect benchmarks, existing structures, fences, walls, sidewalks, paving, aprons, and curb/gutters from excavating equipment and vehicular traffic.

D. Maintain and protect above and below grade utilities/pipes that are to remain.

E. Cut out soft areas of subgrade not capable of compaction in place. Backfill with select fill as defined in Section 312323 – Soil Materials and compact to density equal to or greater than requirements for subsequent backfill material.

3.2 EXCAVATING

A. Excavate subsoil required for storm drainage pipe.

B. Cut trenches sufficiently wide to enable installation and allow inspection in accordance with the manufacturer’s requirements and specifications. In paved areas, if applicable, sawcut back pavement and base section 12 inches from edge of trench wall. Remove water or materials that interfere with Work. Trench bottom shall be compacted to 95 percent of maximum density in accordance with ASTM D1557.

C. Do not interfere with 45 degree bearing splay of foundations.

D. Hand trim excavation. Remove loose matter.

E. Remove lumped subsoil, boulders, and rock up to 1/3 cubic yard, measured by volume.

F. Correct areas over excavated in accordance with Section 312000 - Excavating.

G. If utility trenches or other excavations to or beyond a depth of 5 feet below construction grade, the Contractor shall be required to develop a Trench Safety Plan to protect personnel entering the trench or trench vicinity. Any such designs and safety plans shall be developed in accordance with current OSHA guidelines and other applicable industry standards. If shielded trenching methods are used, including trench box systems, they shall comply with the

manufacturer's recommendations in accordance with the requirements of a Trench Safety Plan and relevant OSHA regulations. Under no circumstances shall excavations be permitted to remain open overnight.

H. Stockpile excavated material in area designated on site and remove excess material not being used, from site.

I. Although groundwater was not observed within the anticipated depth of excavation assumed for the pipelines, seasonal fluctuations, and/or unforeseen environmental conditions may result in water being encountered at shallower depths.

3.3 BEDDING AND BACKFILLING

A. Bedding and backfill recommendations for the proposed storm drainage system shall comply with the manufacturer's specifications and requirements.

B. Backfill trenches to contours and elevations with unfrozen fill materials.

C. Systematically backfill to allow maximum time for natural settlement. Do not backfill over porous, wet, frozen, or spongy subgrade surfaces.

D. Bedding Materials: The bedding materials shall be selected to ensure the most uniform contact between the pipe and the foundation as possible. Granular soils such as bank run sand, concrete sand, gem sand, pea gravel, crushed limestone, or cement treated sand may be used as the bedding material. It is essential that bedding materials are placed in loose lift thicknesses of no more than 8 inches and compacted to a minimum of 95 percent of maximum dry density determined by ASTM D 1557. The pipe bed shall be prepared by compacting twelve (12) inches of the shaped subgrade to 95% as determined by ASTM D 1557. The moisture content of the subgrade should be maintained at or above optimum moisture content until permanently covered. Refer to pipe manufacturer and Geotechnical Investigation and/or consult with Project Geotechnical Engineer for additional recommendations on bedding material for pipe.

Soils classified as CH, CL, MH, ML, OH, OL, PT (or any combination thereof) under the Unified Soil Classification System (USCS) shall not be allowed for use as bedding materials. Refer to Geotechnical Investigation for description of soils that are not allowed as bedding materials.

E. Trench Backfill: Backfill material shall meet the requirements of select fill as per section 312323 - Soil Materials, and placed in accordance with the manufacturer's recommendations. Backfill for trenches shall not be started until the pipeline is properly bedded in accordance with the above recommendations. Materials removed from the trench excavations will generally be suitable as backfill above the bedding, provided they are not saturated and do not contain organic matter, debris, or other deleterious material and meet the requirements for select fill in accordance with section 312323 - Soil Materials.

To reduce potential settlements of the ground surface resulting from consolidation of the trench backfill, the trench backfill shall be placed in 6-inch thick loose lifts and compacted to at least 95 percent of the maximum dry density as determined by ASTM D 1557.

Material for backfilling within the pipe zone (typically, defined as the depth extending from the bedding materials to 12 inches above the pipe) shall be equivalent to those used for bedding. Trench excavation materials may be re-used as backfill above the pipe zone provided they are

free of deleterious material, organic matter, cobbles or boulders over ¾ inches in nominal size and as long as the material complies with the requirements and specifications as set forth by the pipe manufacturer.

F. Place select fill material and compact material in equal continuous layers not exceeding six (6) inches uncompacted depth.

G. Backfill Procedure at Pipe Zone (between trench bottom and 12 inches above pipe): Use backfill material free of all lumps and rocks, and deposit in trench simultaneously on both sides of pipe. Thoroughly compact under and on each side of pipe to provide solid backing against external surface of pipe. Compact backfill to 95 percent of maximum density at optimum moisture in accordance with ASTM D1557 and ASTM D2922. Refer to pipe manufacturer's specifications for additional recommendations.

H. Backfill Procedure above Pipe Zone: Place compacted backfill to required subbase elevation. Compact backfill to 95 percent of maximum density at optimum moisture in accordance with ASTM D1557 and ASTM D2922. Refer to pipe manufacturer's specifications for additional recommendations.

I. Flooding the trench with water will not be permitted as a form of compaction.

J. Employ a placement method that does not disturb or damage foundation perimeter drainage and utilities in trench.

K. Maintain optimum moisture content of fill materials to attain required compaction density.

L. Remove surplus fill materials from site.

M. Leave fill material stockpile areas completely free of excess fill materials.

N. Refer to Geotechnical Investigation for additional recommendations on buried pipe including bedding, backfill, and trench safety.

3.4 TOLERANCES

A. Top Surface of General Backfilling: Plus or minus one tenth (1/10) of an inch from required elevations.

3.5 FIELD QUALITY CONTROL

A. Section 014001 – Quality Control: Field inspection and testing.

B. Compaction testing will be performed in accordance with ASTM D2922, and ASTM D3017.

C. If tests indicate Work does not meet specified requirements, remove Work, replace, compact, and retest.

D. Frequency of Tests:

1. One (1) field density test for each 50 LF of trench bottom prior to placing bedding/fill.

2. One (1) field density test for each 50 LF of trench per layer of fill for each work area.

3. One (1) moisture density curve for each type of material used, as indicated by the sieve analysis and plasticity index.

4. Frequency of Tests: As stated herein or as recommended by pipe manufacturer; whichever is more stringent.

3.6 PROTECTION OF FINISHED WORK

A. Protect finished Work under provisions of these specifications.

B. Reshape and re-compact fills subjected to vehicular traffic during construction.

END OF SECTION 312316.13

SECTION 312323 - SOIL MATERIALS

PART 1 GENERAL

1.1 SECTION INCLUDES

A. Select Fill Material.

1.2 RELATED SECTIONS

A. Section 312313.13 – Backfilling.

1.3 REFERENCES

A. ASTM D1557 – Test Methods for Moisture –Density Relations of Soils and Soil-Aggregate Mixtures Using 10 lb. (4.54 kg) Rammer and 18 inch (457 mm) Drop.

B. ASTM D2487 – Classification of Soils for Engineering Purposes.

C. ASTM D2922 – Test Methods for Density of Soil and Soil-Aggregate in Place by Nuclear Methods (Shallow Depth).

D. ASTM D3017 – Test Method for Moisture Content of Soil and Soil-Aggregate in Place by Nuclear Methods (Shallow Depth).

E. Refer to Geotechnical Investigation report prepared by Professional Service Industries, Inc. on February 1, 2016 for additional requirements.

1.4 SUBMITTALS FOR REVIEW

A. Section 013300 - Submittals: Procedures for submittals.

B. Samples: Submit, in air-tight containers, sufficient sample quantity of each type of fill as required by testing laboratory.

1.5 SUBMITTALS FOR INFORMATION

A. Section 013300 – Submittals: Procedures for submittals.

B. Materials Source: Submit name of imported materials source.

1.6 QUALITY ASSURANCE

A. Perform Work in accordance with the City of El Paso Design Standards for Construction.

PART 2 PRODUCTS

2.1 SELECT FILL MATERIALS

A. Select fill materials shall consist of soil that conforms to the following characteristics:

1. Maximum Liquid Limit: Not exceeding 40.

2. Plasticity Index: Less than 12

3. Free from debris, roots, grass, other vegetable matter, clay lumps, rocks larger than three (3) inches in any dimension, or one half the loose lift thickness, whichever is smaller, or other deleterious materials.

Soils proposed to be used as Engineered Structural Fill Material should be classified in accordance with procedures stated in ASTM D2487. The on-site materials/soils meeting the following criteria could be reused as Engineered Structural Fill. Consult with Project Geotechnical Engineer.

Soils, classified as GW, GP, GC, GM, GC-GM, GP-GM, GP-GC, SW, SP, SC, SM, SC-SM, SP-SM, and SP-SC under the USCS, are considered to be acceptable for use as Select Fill.

Soils classified as PT, OL, OH, MH, ML, CL, and CH or where the plasticity index exceeds 15, under the USCS are not considered suitable for use as Select Fill Materials at this site. <u>If the above referenced soils are encountered at the site, these soils are NOT considered suitable for use as Select Fill</u>.

Select Fill shall be placed in loose lifts not exceeding 8 inches in thickness and compacted to at least 95% of Maximum Density as determined by ASTM D1557. The moisture content of the fill shall be maintained within the range of 2 percentage points below to 2 percentage points above the optimum moisture content value for non-cohesive soils, as determined by the Modified Proctor Maximum Dry Density Test (ASTM D1557), until final compaction.

2.2 SOURCE QUALITY CONTROL

A. Testing and Analysis of Select Fill Material: Perform in accordance with ASTM D1557, ASTM D2487, ASTM D2922, and ASTM D3017.

B. Testing and Analysis of Topsoil Material: Perform in accordance with ASTM D1557, ASTM D2487, ASTM D2922, and ASTM D3017.

C. If tests indicate materials do not meet specified requirements, remove and replace material, and retest.

D. Provide materials of each type from same source throughout the Work.

PART 3 - EXECUTION

3.1 SOIL REMOVAL

A. Excavate Select Fill Material and topsoil from areas designated.

B. Remove lumped soil, boulders, and rock.

C. Stockpile excavated material in area designated on site and remove excess material not being used, from site.

3.2 STOCKPILING

A. Stockpile materials on site at locations approved by Engineer.

B. Stockpile in sufficient quantities to meet Project schedule and requirements.

C. Separate differing materials with dividers or stockpile apart to prevent mixing.

D. Prevent intermixing of soil types or contamination.

E. Direct surface water away from stockpile site to prevent erosion or deterioration of materials.

3.3 STOCKPILE CLEANUP

A. Remove stockpile, leave area in a clean and neat condition. Grade site surface to prevent freestanding surface water.

END OF SECTION 312323

SECTION 321123 – CRUSHED AGGREGATE BASE COURSE

I. GENERAL

A. DESCRIPTIONS. This item shall consist of a crushed aggregate base course composed of crushed stone constructed on the prepared underlying course in accordance with these specifications and shall conform to the dimensions and typical cross-section shown on the plans and with the lines and grades approved by the Project Engineer.

B. SUBMITTALS. Materials certificate from supplier stating that base course meets specified requirements.

II. MATERIALS

A. STONE. The stone shall be either crushed stone or crushed gravel meeting the requirements of the Geotechnical Engineer. The fine stone shall be screenings obtained from crushed stone or gravel.

The material for the crushed aggregate base course shall meet the quality requirements as specified in Item 247 of the Texas Department of Transportation Standard Specifications for Construction of Highways, Streets, and Bridges, current Edition.

The crushed aggregate stone shall have a percent of wear not more than 45 at 500 revolutions, as determined by AASHTO T 96 (Los Angeles Rattler Test).

The crushed stone shall not show evidence of disintegration nor show a total loss greater than 12% when subjected to 5 cycles of the sodium sulfate accelerated soundness test using AASHTO T 104.

Crushed aggregate base course shall meet the requirements for Type “A”, Grade 1 or better, material according to Item 247 Flexible Base, as described in the Texas Department of Transportation Standard Specifications for Construction of Highways, Streets and Bridges, current edition. All the requirements of this document shall be met, except where density is specified. The density shall not be less than 100% of ASTM D1557 at a moisture content maintained at or near the optimum moisture content. Base course shall be placed in loose lifts not exceeding 8 inches in thickness.

The gradations represent the limits that shall determine suitability of stone for use from the sources of supply. The final gradations decided on within the limits designated shall be well graded from coarse to fine and shall not vary from low limit on one sieve to the high limit on the adjacent sieves or vice versa.

B. TESTING FOR GRADATION OF STONE. Testing of flexible base materials shall be in accordance with the Texas Department of Transportation’s Standard Laboratory Test Procedures.

III. CONSTRUCTION METHODS. The construction shall meet the requirements of Item 247.3 of the Texas Department of Transportation’s Standard Specifications or the following, whichever is more stringent:

A. OPERATION AT SOURCES OF SUPPLY. All work involved in clearing and stripping of quarries and pits, including the handling of unsuitable material shall be performed by the Contractor at his own expense. The base material shall be obtained from approved sources. The material shall be handled in a manner that shall secure a uniform and satisfactory product.

B. EQUIPMENT. All equipment necessary for the proper construction of this work shall be on the project, in first class working condition, and approved by the Engineer before construction is permitted to start.

C. PREPARING UNDERLYING COURSE. Refer to the Geotechnical Report for additional specifications and recommendations on subgrade preparation. The underlying course shall be tested and accepted by the Engineer before placing and spreading operations are started. Any ruts or soft, yielding places caused by improper drainage conditions, hauling, or any other cause, shall be corrected and rolled to the required compaction before the base course is placed thereon. The underlying course shall consist of 8 inches of moisture conditioned and compacted select fill or scarified, prepared and compacted native soils that meet the criteria for suitable structural fill.

To protect the underlying course and to insure proper drainage, the spreading of the base shall begin along the centerline of the pavement on a crowned section or on the high side of the pavement with a one-way slope.

D. Areas to support pavements should be stripped of all pavement, concrete, construction debris, vegetation, organic topsoil and any foreign matter and the exposed subgrade shall be proof-rolled in accordance with the recommendations in the Geotechnical Investigation.

E. PLANT MIX. The base material shall be uniformly blended during crushing operations or mixed in an approved plant. The type of plant may be either a central proportioning and mixing plant or a traveling plant. The plant shall blend and mix the materials to meet these specifications and to secure the proper moisture content for compaction.

F. PLACING AND SPREADING.

1. Central Plant. The crushed aggregate base course material that has been proportioned in a crushing and screening plant, or proportioned and processed in a central mixing plant, shall be placed on the prepared underlying course and compacted in layers of the thickness shown on the plans. The depositing and spreading of the material shall commence where designated, and shall progress without breaks. The material shall be deposited and spread in lanes in a uniform layer and without segregation of size to such loose depth that when compacted, the layer shall have the required thickness. The base course shall be spread by spreader boxes or other approved devices or methods that shall spread the base in the required amount to avoid or minimize the need for rehandling the material and to prevent the rutting of the underlying course. The spreader boxes or other devices shall be equipped with strike-off templates or screeds that can be adjusted or controlled to secure the required thickness of the material. Dumping from vehicles in piles on the underlying course which will require rehandling shall not be permitted. Hauling over the uncompacted base course shall not be permitted.

2. Traveling Plant. If a traveling plant is used for mixing, the base material shall be placed on the underlying course in such condition to provide a base mixture conforming to the specified gradation and moisture content, and in such quantity to

develop the thickness of the layer of the base and the density after compaction. The material shall be shaped to a uniform section. The Geotechnical Engineer shall examine the moisture to determine that the mixing is complete and satisfactory and that the proper moisture content is maintained before compaction is started. No spreading shall be done except when authorized. Care shall be taken that no material from the underlying course is mixed with the base material.

If necessary, the base course shall be bladed until a smooth, uniform surface is obtained that is true to line, grade, and cross-section and until the mix is in condition for compacting.

3. Method of Placing. The base course shall be constructed in a layer not less than 2-1/2 inches nor more than 4-1/2 inches of compacted thickness. The base, as spread, shall be of uniform gradation with no segregation or pockets of fine or coarse materials. Unless otherwise permitted by the Engineer, the base shall not be spread more than 2,000 square yards or 500 lineal feet in advance of the rolling. Any necessary sprinkling shall be kept within these limits. No material shall be placed in snow or on a soft, muddy, or frozen underlying course.

   When more than one layer is required, the construction procedure described herein shall apply similarly to each layer.

   The Geotechnical Engineer shall make tests to determine the maximum density and the proper moisture content of the base material, and this information will be available to the Contractor. The base material shall have a satisfactory moisture content when rolling is started, and any minor variations prior to or during rolling shall be corrected by sprinkling or aeration, if necessary.

   During the placing and spreading, sufficient caution shall be exercised to prevent the incorporation of embankment, subbase, or shoulder material in the base course mixture.

4. Herbicide: An environmentally friendly, EPA approved, safe herbicide must be applied, as per manufacturer's specifications, to the crushed aggregate base course material prior to placing asphalt material. Herbicide shall be Sahara DG Herbicide or Engineer approved equivalent.

   a. Cautions:

      i. Apply herbicides, in any form, in strict accordance with the label instructions. The label provides complete specifications regarding the chemical content and directions for use of the herbicide. It is important to read the label carefully and then precisely follow instructions to assure the effectiveness and safety of the process.
      ii. After treatment is complete, it is important to pave the base course as soon as possible.
      iii. It is advisable to plant new vegetation, such as trees, shrubs, and flowers, sufficiently far from the sterilized area to protect their root systems from becoming contaminated by the herbicide.
      iv. Liquid herbicides can be carried by the wind during application. Should this occur, it could severely damage vegetation adjacent to the construction site. Never attempt to apply liquid herbicides when there are strong breezes or when rain is imminent.

v. Herbicides shall not be applied when EPIA or City of El Paso personnel and the general public are present. Contractor shall schedule this application during appropriate hours/times of day so as not to create a hazardous condition to the public.

vi. Do not apply liquid herbicides to water saturated soils such as may exist after a rainfall.

vii. Areas adjacent to surfaces where approved herbicide will be applied to shall be protected from overspray.

5. Finishing and Compacting. After spreading, the crushed stone shall be thoroughly compacted by rolling. The rolling shall progress gradually from the sides to the center of the area under construction, or from one side toward previously placed material by lapping uniformly each preceding rear wheel track by one half the width of such track. Rolling shall continue until the base is thoroughly set, the interstices of the material reduced to a minimum, and until creeping of the base ahead of the roller is no longer visible. Rolling shall continue until the base material has been compacted to not less than 100% density as per ASTM D1557, as specified. Density tests will be taken at every 500 square yards or at every 125 lineal feet with a minimum of two (2) density tests taken as recommended by the Geotechnical Engineer, the more stringent requirement applies. Blading and rolling shall be done alternately, as required or directed, to obtain smooth, even, and uniformly compacted base.

   The base course shall not be rolled when the underlying course is soft or yielding or when the rolling causes undulation in the base course. When the rolling develops irregularities that exceed ½ inch when tested with a 16-foot straightedge, the irregular surface shall be loosened, refilled with the kind of material as that used in constructing the course, and rolled again as required.

   In areas inaccessible to rollers, the base course material shall be tamped thoroughly with mechanical tampers as approved by Engineer.

   The sprinkling during rolling, if necessary, shall be in the amount and by equipment approved by the Engineer.

6. Surface Test. After the course has been completely compacted, the surface shall be tested for smoothness and accuracy of grade and crown. Surface tests will be taken at every 500 square yards or at every 125 lineal feet with a minimum of two (2) density tests taken. Any portion lacking the required smoothness or failing in accuracy of grade or crown shall be scarified, reshaped, recompacted, and otherwise manipulated as the Engineer may direct until the required smoothness and accuracy are obtained. The finished surface shall not vary more than ½ inch from a 16-foot straightedge when applied to the surface parallel with, and at right angles to, the centerline.

7. Thickness. The thickness of the base course shall be eight and one half (8-1/2) inches for all pavement structures, as recommended by the Geotechnical Engineer or as determined by depth tests or cores taken at every 500 square yards or at every 125 lineal feet with a minimum of two (2) density tests taken for each area. Refer to Construction Documents for exact location of new pavement structures. The thickness of the base course shall be eight (8) inches below all drainage structures including manholes, area inlets, junction boxes, etc. When the base deficiency is more than ½ inch, the Contractor shall correct such areas by scarifying, adding satisfactory base mixture, rolling, sprinkling, reshaping, and finishing in accordance with these

specifications. The Contractor shall replace, at his expense, the base material where borings have been taken for test purposes.

8. Protection. Work on the base course shall not be accomplished during freezing temperatures not when the subgrade is wet. When the stones contain frozen materials or when the underlying course is frozen, the construction shall be stopped.

Hauling equipment may be routed over completed portions of the base course, provided no damage results and provided that such equipment is routed over the full width of the base course to avoid rutting or uneven compaction. However, the Engineer in charge shall have full and specific authority to stop all hauling over completed or partially completed base course when, in his opinion, such hauling is causing damage. Any damage resulting to the base course from routing equipment over the base course shall be repaired by the Contractor at his own expense.

9. Maintenance. Following the completion of the base course, the Contractor shall perform all maintenance work necessary to keep the base course in a condition satisfactory for priming. After priming, the surface shall be kept clean and free from foreign material. The base course shall be properly drained at all times. If cleaning is necessary, or if the prime coat becomes disturbed, any work or restitution necessary shall be performed at the expense of the Contractor.

10. Prime Coat. A tack cost of 0.25 gallons per square yard will be placed on approved base course surface.

TESTING AND MATERIAL REQUIREMENTS

Testing and Short Title	Material and Short Title
AASHTO T 96 – Abrasion	None
AASHTO T 104 – Soundness	
AASHTO T 11 and T 27 – Gradation	
AASHTO T 89 – Liquid Limit	
AASHTO T 90 – Plastic Limit and Plasticity Index	
AASHTO T 19 – Unit Weight	

END OF SECTION 321123

SECTION 321216 - ASPHALTIC CONCRETE PAVING

PART 1 GENERAL

1.1 SECTION INCLUDES

A. Asphaltic concrete paving for paved areas.

B. Curb markings.

1.2 RELATED SECTIONS

A. Section 312213 – Site Rough Grading: Preparation of site for paving and base.

B. Section 312323.13 – Backfilling: Compacted subbase for paving.

C. Section 321123 – Crushed Aggregate Base Course.

1.3 REFERENCES

A. Texas Department of Transportation (TxDOT) Standard Specifications for Construction of Highways, Streets, and Bridges, current edition.

1.4 PERFORMANCE REQUIREMENTS

A. Paving: Designed for the new parking areas.

1.5 QUALITY ASSURANCE

A. Perform Work in accordance with TxDOT Standard Specifications.

B. Mixing Plant: Conform to TxDOT Standard Specifications.

C. Obtain materials from same source throughout.

1.6 ENVIRONMENTAL REQUIREMENTS

A. Do not place asphalt when ambient air or base surface temperature is less than 40 degrees F or if surface is wet or frozen.

B. Place bitumen mixture when temperature is not more than 15 F degrees below bitumen suppliers' bill of lading and not more than maximum specified temperature.

PART 2 PRODUCTS

2.1 MATERIALS

A. Asphalt Cement: In accordance with Item 340.3, TxDOT Standard Specifications.

B. Aggregate for Wearing Course Mix: In accordance with TxDOT Standard Specifications.

C. Fine Aggregate: In accordance with TxDOT Standard Specifications.

D. Mineral Filler: In accordance with TxDOT Standard Specifications.

2.2 ASPHALT PAVING MIX

A. Use dry material to avoid foaming. Mix uniformly.

B. In accordance with Item 340.3, TxDOT Standard Specifications: Hot Mix Asphaltic Concrete (HMAC) surface course shall be TxDOT Type "C" for all pavement structures as shown on Construction Documents, and a compacted thickness of three and one half (3-1/2) inches as shown on Construction Documents.

C. Select fill materials that support the HMAC pavement shall be placed at 95% of the maximum dry density and at ±2 percentage points of the optimum moisture content as determined by ASTM D1557.

D. A crushed aggregate base course is recommended below vehicular flexible pavement structures, refer to Construction Documents and Section 321123 – Crushed Aggregate Base Course material for thickness requirements.

E. The job mix formula shall be established using the Marshall Design Mix method in accordance with TxDOT Standard Specifications and ASTM D1559.

2.3 SOURCE QUALITY CONTROL AND TESTS

A. Division 1 Specification Sections as they relate to mix design for asphalt.

PART 3 EXECUTION

3.1 EXAMINATION

A. Verify base conditions under provisions of these specifications.

B. Verify that compacted base is dry and ready to support paving and imposed loads.

C. Verify gradients and elevations of base are correct.

3.2 SUBBASE

A. Section 321123 – Crushed Aggregate Base Course forms the base construction for this work.

3.3 PREPARATION – PRIMER

A. Apply primer in accordance with manufacturer's instructions.

B. Apply primer to contact surfaces of curbs, gutters, and site structures.

C. Use clean sand to blot excess primer.

3.4 PREPARATION – TACK COAT

A. Apply tack coat in accordance with manufacturer's instructions.

B. Apply tack coat to contact surfaces of curbs, gutters and site structures.

C. Coat surfaces of manholes and catch basin frames with oil to prevent bond with asphalt pavement. Do not tack coat these surfaces.

3.5 PLACING ASPHALT PAVEMENT – SINGLE COURSE

A. Install Work in accordance with TxDOT Standard Specifications.

B. Place asphalt within 24 hours of applying primer or tack coat.

C. Place three and one half (3-1/2) inches compacted thickness in all areas as designated on plans and Section 2.2.B of this specification. Refer to the Project Drawings for the limits of the proposed asphalt pavement structure areas and exact location of drives.

D. Compact pavement by rolling to density as specified. Do not displace or extrude pavement from position. Hand compact in areas inaccessible to rolling equipment.

E. Roll with consecutive passes to achieve an even and smooth finish without roller marks.

3.6 CURB MARKINGS

A. Sweep and clean surface to eliminate loose material and dust.

B. Do not apply curb markings until layout and placement has been verified by Project Engineer.

C. Apply paint with mechanical equipment to produce uniform straight edges.

D. Apply curb markings as per manufacturer's recommended rates.

3.7 TOLERANCES

A. Flatness: Maximum variation of 1/4 inch measured with 10-foot straight edge.

B. Scheduled Compacted Thickness: Within 0.01 feet.

C. Variation from True Elevation: Within 0.01 feet.

3.8 FIELD QUALITY CONTROL

A. At least one (1) set of laboratory densities, extractions, gradations, stabilities and flow tests shall be performed for each type of asphaltic concrete placed per day.

B. Temperature checks shall be performed as the asphaltic concrete is being placed to verify that the required temperature is being maintained.

C. At least one (1) asphaltic concrete core shall be taken per 5,000 square feet to verify asphaltic concrete pavement thickness and density.

D. Refer to Geotechnical Investigation report prepared by Professional Service Industries, Inc. for additional quality control requirements.

3.9 PROTECTION

A. Immediately after placement, protect pavement from mechanical injury for 7 days or until surface temperature is less than 140 degrees F (60 degrees C).

END OF SECTION 321216

SECTION 321218 - BITUMINOUS PRETREATMENT and HMAC OVERLAY OR SEAL COAT

I. DESCRIPTION

A. This work shall consist of heating, scarifying, rejuvenating, recycling, compaction, and the overlay of new bituminous surface, which are in compliance with these specifications. After each phase the surface shall provide a smooth surface free of gouges, ridges, oil film and other imperfections of workmanship and shall have a uniform textured appearance. In all situations where the existing bituminous material contacts the curb face and/or gutter edge it shall include the removal of all existing bituminous material covering the gutter up to and along the face of curb at no additional cost to EPIA. The following operations must be performed:

1. Heat, scarify and/or hot mill the existing surface to the required depth as per specifications.
2. Distribute asphalt-rejuvenating agent uniformly over the scarified surface and/or blend with the scarified surface as per specifications.
3. Compaction of scarified, rejuvenated surface as per specifications.
4. HMAC overlay or Seal Coat pavement on scarified and non-scarified pavement as per specifications.
5. Compaction of new bituminous surface to specified, density as per specifications.
6. Cleaning and detailing of all materials/debris from and around job site area.

B. The Contractor will call the Air Quality Control office and speak to an Air Quality Technician daily before the end of the day and the day of the heater scarifying operation to obtain permission to scarify and to report location of activities for that day. Operations will not be conducted when the Air Quality Program predicts unfavorable atmospheric conditions. The Contractor will comply with all Federal, State and Local Air Pollution Laws.

II. CONSTRUCTION DETAILS

A. Heater Scarifying: Prior to commencing and after completion of scarifying operations, the surface shall be cleaned of all loose material/debris that is present and all holes in the surface shall be patched to the satisfaction of the Project Engineer or designated representative.

1. The machine shall be able to uniformly apply sufficient radiant heat to the pavement surface to allow the pavement to be scarified not less than one (1) inch after compaction. The heating and scarifying must be done without damaging the bituminous material or allowing the surface of the pavement to exceed 350 degrees F.
2. At least 90% of the aggregate shall be re-mixed by spinning or tumbling. The weight of the existing asphalt surface has been estimated to be approximately 144 lbs. per cubic foot. On this basis, a minimum of 9 lbs. per square foot of existing surface shall be scarified to obtain a depth of between 3/4" and 1" after compaction. If the tests indicate that the material weighs either less than 137 lbs. or more than 151 lbs. per cubic foot, the weight per square foot requirement will be adjusted accordingly by the Project Engineer or designated representative.

3. Scarification will be deemed acceptable when the moving average of three or more consecutive, random area weight tests per hour and/or per scarifying pass or as deemed necessary by the Project Engineer or designated representative indicate that the required depth/weight has been scarified. The width of the scarified pavement section shall not exceed the width of the heated pavement.
4. In situations where streets or drives are on a curve, direct application of the heat and the trailing scarification blades shall not separate from the edge of existing asphalt more than 2-½" anywhere along the circumference of the curve. Every attempt shall be made to keep the edge of the heaters and scarifier just inside the lip of concrete gutters or curbs, just as is done normally along a straight section of roadway.
5. Contractor shall take precautions so as not to damage or destroy any manholes, utility covers and encasements and will be held responsible for repair or replacements of damaged covers and encasements and at no additional cost to EPIA or City of El Paso.
6. Scarifier will make every effort to maintain a constant speed in order to attain the minimum required poundage per random tests or as deemed necessary by the Project Engineer or designated representative.
7. A minimum of one raker for each scarifier will be assigned to that machine on a full-time basis. The raker will see that no grooving pattern is visible behind his/her assigned scarifier and will also level all high spots to match the existing grade or to the satisfaction of the Project Engineer or designated representative.
8. Scarifying will not be permitted to start until the outside temperature is at a minimum of 45 degrees F. and rising. Scarifying will be stopped when the outside temperature is at 50 degrees F. and falling. Work will also not be permitted when wind velocity reaches 20 mph, or when a determination is made by the EPIA representative that the wind conditions are too severe to continue operations. All operations will cease upon request by the Project Engineer or designated representative.
9. During the heater scarifying operations, a 1,000-gallon minimum water truck equipped with a 5-HP-minimum pump will be required on the job site to prevent any scorching or burning of adjacent shrubs, trees or grass by soaking said vegetation. Water truck will be manned on the job site while the Heater Scarifying operation is in progress. If, in the opinion of the Project Engineer or designated representative, any trees, shrubs, or other personal property is destroyed as a result of the heating process, the Contractor shall be responsible to the property Owner(s), to provide compensation in any form to cover any and all damages to the satisfaction of the property Owner(s) and EPIA's representative.
10. Refueling operations must meet standards of the City of El Paso Fire Marshall's office and/or all City, State and Federal requirements.

B. RECYCLING: Upon written permission from the Project Engineer or designated representative, the Contractor may operate a Recycling machine in order to achieve more uniformity and tumbling of scarified mix with a precise rate of application of a Rejuvenating Agent, all in one process. This process must be capable of operating over existing HMAC and/or Seal Coated surfaces without polluting the atmosphere or damaging the bituminous mixtures.

1. A minimum of one raker for each recycler will be assigned to that machine on a full-time basis. The raker will see that no grooving pattern is visible behind

his/her assigned recycler and will also level all high spots to match the existing grade or to the satisfaction of the Project Engineer or designated representative.

C. Rolling: Immediately following the heater scarifying operation the surface shall be rolled with a 10 ton minimum, self-propelled tandem steel drum static roller to accomplish a proper density and smoothest surface possible, as determined by the Project Engineer or designated representative.

III. MATERIALS

A. Materials shall conform to all specified requirements as per Specifications.

1.	Asphalt Rejuvenating Agent	Section V
2.	HMAC Overlay Surface Course	Section VI
3.	Seal Coat Overlay Surface Course	Section VII

IV. EQUIPMENT

A. Heater Scarifier: The asphalt heater scarifier shall be a self-contained machine specifically designed to reprocess the upper layers of worn bituminous pavements. The machine shall be self-propelled, capable of operating at speeds of 5.0 to 70.0 feet per minute and consist of an insulated combustion chamber adjustable in widths from 8.0 to 12.0 feet, in two foot increments, with ports permitting forced air and fuel injection for proper combustion without excessive smoke. The hourly machine capacity shall range between 500 to 1500 square yards of treated surface.

1. The tractor shall be equipped with a PTO system to supply the hydraulics on the heater scarifier, electrical system, a tachometer located on the outside control panel, head lights, four-way flashers, turn signals, stop lights, back-up alarm, electric and air horns, and a beacon visible to on-coming traffic. All accessories on tractor will be in working condition at all times. The tractor will comply with all Local, State and Federal Safety Regulations.
2. The machine shall be equipped with pressure-loaded carbide and/or diamond tip scarifying teeth, adjustable in widths from 8.0 to 12.0 feet in two foot increments, sufficiently spaced so as to cut to the specified depth, a surface conforming to the desired finished profile of the pavement, and the surface shall be left in an evenly spread condition where as not to leave a resemblance of a grooving pattern.
3. No oil leaks on heater scarifier will be permitted, and if any leaks are to occur scarifying operation will stop until the machine is repaired to the satisfaction of the Project Engineer or designated representative. Additionally, each propane regulator will be equipped with a pressure regulator gauge that will allow operator to accurately regulate amount of fuel flowing to ports, and each port will be equipped with a shut-off valve to enable operator to cut fuel supplied to any port desired.
4. The steel wheels on the scarifier will be smooth and free of any lumps that will create grooving patterns on unscarified surfaces. The wheels will also be equipped with a scraper to prevent any material from sticking.
5. The width of the scarified pavement section shall not exceed the width of the heated pavement and the scarification teeth shall be capable of being manually adjusted to provide for a uniform cut along the entire width. The scarifier shall be capable of adjustments from 8.0 to 12.0 feet in two foot increments.

6. A minimum of one raker for each scarifier will be assigned to that machine on a full-time basis. The raker will see that no grooving pattern is visible behind his/her assigned scarifier and will also level all high spots to match the existing grade or to the satisfaction of the Project Engineer or designated representative.
7. The heater flame shall not blast, scorch or erode the pavement. The machine should also be equipped with some deflectors to divert heat away from overhanging trees, shrubs, etc.
8. The scarifier shall be kept in a satisfactory working condition at all times. The Project Engineer or designated representative will enforce all conditions.
9. Measurements will be taken by the square yard of scarified pavement in accordance with these specifications. In the event that a scarified area does not meet minimum requirements and/or an area is skipped due to a parked vehicle or any other obstructions, the entire area containing the above mentioned deficiencies will not be compensated for.
10. Prior to the heater scarifying process commencing, the heaters shall meet all requirements established by the City of El Paso Fire Marshall's Office.
11. Payments shall be made at the contract's unit price per scarified square yard and shall be full compensation for the item completed as herein specified.

B. Recycling Machine: The Recycling machine shall be self-propelled and be equipped with the means to spin or tumble the scarified material to the scarified depth. The Recycler shall also be equipped with augers to spread the scarified material and a vibrating screed to place the material evenly along the scarified surface and have the means to match the existing surface or grade.

1. The Recycler shall be equipped with a computerized rejuvenating applicator electronically capable of adjustments where as to apply at the precise rate of between 0.05 and 0.2 gallons per square yard of undiluted rejuvenating agent and be capable of increasing/decreasing at a rate of 0.01 per square yard or as directed by the Project Engineer or designated representative.
2. The suggested application rate will be 0.10 gallons per square yard. Existing field conditions may change suggested application rates, therefore; the Contractor shall recommend to EPIA what the necessary application rate will be at any specific location, in order to prevent flushing/bleeding from occurring.
3. The Contractor shall take the necessary precautions not to add excessive rejuvenating agent to any scarified surface. Should excessive rejuvenating agent be applied to an area and bleeding/flushing occurs, the Contractor shall remove and replace the entire area, length and width, to the appropriate depth necessary to prevent bleeding/flushing at no additional cost to EPIA or City of El Paso.
4. Prior to the heater scarifying process commencing in an area, the Contractor shall be responsible for notifying EPIA in writing of any existing street or drive surfaces containing excessive rejuvenating agent and/or bleeding/flushing. If the Contractor fails to notify EPIA in writing and after the scarifying/paving process has been completed and bleeding/flushing occur, the Contractor shall remove and replace the entire length and width to the necessary depth required to prevent said condition from re-occurring. The labor and materials needed to repair the bleeding/flushing area shall be at the Contractor's expense at no additional cost to EPIA or the City of El Paso.
5. Under no circumstances will the scarifying or recycling operation continue, if there is sign of the rejuvenating agent applicator uncontrollably leaking or dripping any amount of rejuvenating agent on any surface. The scarifying

operation will not continue until applicator is repaired or replaced to the satisfaction of the Project Engineer or designated representative. The surface area containing excess rejuvenating agent will be removed and replaced at no additional cost to EPIA or City of El Paso.

6. The Recycler shall be equipped with adequate safety equipment to include working lights, with turn signals and four-way flashers, stop lights, back-up alarm, horn, and a rotating beacon visible to on-coming traffic.
7. The Recycler shall be kept in a satisfactory working condition at all times. The Project Engineer or designated representative will enforce all conditions.
8. The cost of recycling shall be included in the cost of scarifying. All unscarified surfaces and un-recycled surfaces will be tacked or primed at the rate to be determined by the Project Engineer or designated representative at no additional cost to EPIA or the City of El Paso.

C. Distributor: Immediately following the heater scarifying and rolling operation, a 1000-gallon-minimum asphalt distributor shall be equipped with a computerized rejuvenating applicator electronically capable of adjustments where as to apply at the precise rate of between 0.05 and 0.2 gallons per square yard of undiluted rejuvenating agent and be capable of increasing/ decreasing at a rate of 0.01 per square yard or as directed by the Project Engineer or designated representative.

1. Under no circumstances will the scarifying or recycling operation continue, if there is sign of the rejuvenating agent applicator uncontrollably leaking or dripping any amount of rejuvenating agent on any surface. The scarifying operation will not continue until applicator is repaired or replaced to the satisfaction of the Project Engineer or designated representative. The surface area containing excess rejuvenating agent will be removed and replaced at no additional cost to EPIA or City of El Paso.
2. The suggested application rate will be 0.10 gallons per square yard. Existing field conditions may change suggested application rates, therefore; the Contractor shall recommend to EPIA what the necessary application rate will be at any specific location, in order to prevent flushing/bleeding from occurring.
3. The Contractor shall take the necessary precautions not to add excessive rejuvenating agent to any scarified surface. Should excessive rejuvenating agent be applied to an area and bleeding/flushing occurs, the Contractor shall remove the entire area, length and width, to the appropriate depth necessary to prevent bleeding/flushing at no additional cost to EPIA or City of El Paso.
4. Prior to the heater scarifying process commencing in a street, the Contractor shall be responsible for notifying EPIA in writing of any existing street surfaces containing excessive rejuvenating agent and/or bleeding/flushing. If the Contractor fails to notify EPIA in writing and after the scarifying/paving process has been completed and bleeding/ flushing occur, the Contractor shall remove the entire length and width to the necessary depth required to prevent said condition from re-occurring. The labor and materials needed to repair the bleeding/flushing area shall be at the Contractor's expense at no additional cost to EPIA or City of El Paso.
5. The Asphalt Distributor shall be equipped with adequate safety equipment to include working lights, with turn signals and four-way flashers, stop lights, back-up alarm, horn, and a rotating beacon visible to on-coming traffic.

6. The Asphalt Distributor shall be kept in a satisfactory working condition at all times. The Project Engineer or designated representative will enforce all conditions.

D. Rollers: Immediately following the heater scarifying operation, the surface shall be rolled with a 10 ton minimum, self-propelled tandem steel drum static roller to accomplish a proper density and smoothest surface possible, as determined by the Project Engineer or designated representative. The roller shall be equipped with an electric water pump, spray bar and serviceable nozzles, electronic water flow control, double blade scrapers, a single full width cocoa mat on each drum, a drum spray back-up system complete with its own water pump, filter and spray bar are required.

1. Adequate safety equipment to include working lights, with turn signals and four-way flashers, stop lights, back-up alarm, horn, and a rotating beacon visible to on-coming traffic, are required for this roller.
2. The cost of rolling shall be included in the cost of scarifying. All unscarified surfaces will be tacked or primed at the rate to be determined by the Project Engineer or designated representative at no additional cost to EPIA or City of El Paso prior to the paving process.

E. The Project Engineer or designated representative will enforce all conditions.

V. REJUVENATING AGENT

A. Rejuvenating Agent: Immediately after the rolling or scarifying operations, not to exceed fifteen minutes, the rejuvenating agent shall be applied by a computerized applicator. It shall be electronically capable of adjustment to apply at the precise rate of between 0.05 gallons per square yard and be able to increase the spread rate of 0.01 gallon per square yard up to 0.2 gallons per square yard of undiluted rejuvenating agent to the scarified surface.

B. All un-scarified surfaces to be overlayed shall be tacked with asphaltic material CSS-IH or equal. All contact surfaces of curbs, gutters or structures shall be painted with a thin Coat of asphaltic material CSS-IH or equal at no additional cost to EPIA or City of El Paso.

1. At the discretion of the Project Engineer or designated representative a tack coat of CSS-IH diluted with water up to, but not exceeding, one part water to one part emulsion may be applied to the treated surface in quantities of not less than 0.05 gallon, nor more than 0.10 gallon per square yard of existing surfaces. Care shall be taken to prevent splattering of adjacent pavement, curb or other structures. This shall be applied with equipment specified on K3306 section 4.3 and at no additional cost to EPIA or City of El Paso.

C. The quantities of rejuvenating agent necessary to complete the work may vary considerably. However, no adjustment in contract unit price will be made due to an increase or decrease in quantity usage of rejuvenating agent. Measurements will be made by the gallon of undiluted rejuvenating agent in accordance with these requirements in place.

D. Payments shall be made at the contract's unit price per gallon of undiluted rejuvenating agent and shall be full compensation for the item completed as herein specified.

VI. HMAC OVERLAY SURFACE COURSE

A. HMAC Overlay: This item shall consist of placing on the existing prepared surface, a uniform one (1) inch thick paving mixture of course aggregate, fine aggregate, asphaltic material and mineral fines as required and conforming to City of El Paso's Specification Item K3305, "Plant Mix Bituminous Pavements" specifications.

1. The HMAC overlay shall be placed on the prepared surface no sooner than one (1) day nor longer than three (3) days after scarifying operations.
2. Mix shall be placed by means of an approved paving machine as specified on Item K3305, 4.4.

Test	Test Method		Requirements	
	ASTM	AASHTO	Min	Max
TEST ON EMULSION:				
Viscosity @ 25 deg. (C) SFS	D-244	T-59	15	40
Residue, O/Ow (1)	D-244 (Mod)	T-59 (Mod)	60	65
Viscibility Test (2)	D-244 (Mod)	T-59 (Mod)	No Coagulation	
Sieve Test, O/Ow (2)	D-244 (Mod)	T-59 (Mod)	-	0.1
Particle Charge Test	D-244 (Mod)	T-59 (Mod)	Positive	
Percent Light Transmittance	GB	GB	-	30
TEST ON RESIDUE FROM DISTILLATION:				
Flash Point, COC, Deg (C)	D-92	T-48	196	-
Viscosity @ 60 deg. (C), est	D-445	-	100	200
Asphaltenes, O/Ow	D-2006-70	-	-	1.0
Maltene Distribution Ratio: PC + A(1) / S + A(2)	D-2006-70	-	0.3	0.6
PC/S Ratio (3)	D-2006-70	-	0.5	-
Saturated Hydrocarbons, S(3)	D-2006-70		21	28

§ ASTM D-244 Modified Evaporation Test for percent of residue is made by heating 50 gram sample to 149 deg. (C) (300 deg. F) until foaming ceases, then cool immediately and calculate results.

§ Test procedure identical with ASTM D-244-60 except that .02 Normal Calcium Chloride Solution shall be used in place, of distilled water.

§ Test procedure identical with ASTM-D-244 except that distilled water shall be used in place of two percent sodium olcate solution.

§ Test procedure is attached.

§ Chemical composition by ASTM Method D-2006-70:

PC	Polar Compounds	A = First Acidaffins
A	Second Acidaffins	S = Saturated Hydrocarbons

Note: For gal/ton conversion, use 242 gal per ton.

3. A minimum tack coat coverage of 0.25 gallons per square yard shall be placed on all non-scarified surfaces to include scarified surfaces which have not been paved within the time limit allowed by this contract or where deemed necessary by the Project Engineer or designated representative at no additional cost to EPIA or City of El Paso.

B. The quantity of bituminous material necessary to complete this work may vary considerably. However, no adjustment in the contract's unit price will be made due to an increase or decrease of quantity usage.

C. Payment shall be made at the contract's unit price per ton of HMAC and shall be full compensation for the item completed as herein specified.

VII. SEAL COAT

A. Seal Coat: The Seal Coat shall be placed on the prepared surface no sooner than one (1) day nor longer than three (3) days after scarifying operations. In the event that a Seal Coat street is not paved within the three (3) day limit, all work will cease until said street is paved.

B. Job Mix Formula: No bituminous mixture for pavement shall be produced until a mixed design and job mix formula has been approved by the Project Engineer or designated representative. The mixed design and job mix formula shall be submitted in writing by the Contractor to the Project Engineer or designated representative at least 10 days prior to the start of paving operations and shall indicate the definite percentage of each sieve fraction of aggregate, the percentage of bitumen, and the temperature of the completed mixture when discharged from the mixer. All test data used to develop the job mix formula shall also be submitted. The mix design and job mix formula for each mixture shall be in effect until modified in writing by the Project Engineer or designated representative. Should a change in sources of materials be made, a new job mix formula must be established before the new material is used.

The mix design and job mix formula shall be designed using procedures contained in Chapter III, MARSHALL METHOD OF MIX DESIGN, of the Asphalt Institute's Manual Series No. 2 (MS-2), current edition. The temperature of the mix immediately prior to compaction shall be 250 degrees + or - 5 degrees F (121 degrees + or - 3 degrees C).

C. The Seal Coat shall consist of mixing, in a central plant, aggregate and bituminous material, spreading and compacting the mixed material on the remixed surface.

D. The aggregate shall be free from vegetable matter, lumps or balls of clay, adherent films of clay or other material that will prevent thorough Coating of asphaltic material.

E. The aggregate in the mix shall be crushed stone, composed of hard durable fragments and at least 75% of the material retained on the No. 4 sieve shall be particles having at least two fractured surfaces, plus a filler of finely crushed stone or sand, if necessary, so as to provide a material that will conform to the gradation as shown in Table I.

TABLE I

Sieve Designation	% By Weight Passing
5/8"	100
3/8"	85 – 100
No. 4	40 – 70
No. 10	10 – 25
No. 200	3 – 6

F. Asphaltic materials shall have a penetration of 85-100 and from 6.5 to 7.5% of the mixture by weight. The aggregate shall be dried and heated to a temperature not to exceed 260 deg. F. Dust resulting from this operation shall be collected and wasted. At the time of entering the mixer, the aggregate shall be free of oily or carbonaceous coatings. The moisture content shall not exceed 1% by weight of the dry aggregate.

G. Asphaltic materials shall not exceed 260 deg. F when introduced into the mixture. The aggregate and asphalt, in proper proportion conforming to the specifications, shall be mixed until all aggregate particles are uniformly Coated with asphalt. The temperature of the mixture shall not be less than 250 deg. F when placed on the surface. The plant mix Seal shall be applied in sufficient quantity to achieve a compacted minimum thickness of 1/2 of an inch. Due to imperfections which may be encountered on streets being resurfaced, there is a possibility of various thicknesses above the required minimum.

All plant mix Seal shall be placed by means of an approved paving machine as specified on Item K3305, 4.4 and as stated below.

4.4 Bituminous Pavers. Bituminous pavers shall be self contained, power propelled units with an activated screed or strike off assembly, heated if necessary, and shall be capable of spreading and finishing courses of bituminous plant mix material which will meet the specified thickness, smoothness, and grade. Pavers used for shoulders and similar construction shall be capable of spreading and finishing courses of bituminous plant mix material in widths shown on the plans, if available and shall be capable of operating at forward speeds consistent with satisfactory laying of mixture. The paver shall have a receiving hopper of sufficient capacity to permit a uniform spreading operation.

The hopper shall be equipped with a proportional feed control system to place the mixture uniformly in front of the screed. The screed or strike off assembly shall effectively produce a finished surface of the required evenness and texture without rearing, shoving, or gouging the mixture.

If an automatic grade control device is used, the paver shall be equipped with a control system capable of automatically maintaining the specified screed elevation. The control system shall be automatically actuated from either a reference line or surface, through a system of mechanical sensors, sensor directed

mechanisms or devices which will maintain the paver screed at a pre-determined transverse slope and at the proper elevation to obtain the required surface.

The transverse slope controller shall be capable of maintaining the screed at the desired slope within plus or minus 0.1 percent.

The controls shall be capable of working in conjunction with any of the following attachments:

a. Ski type device of not less than 30 feet (9.14 m) in length or as directed by the Project Engineer or designated representative.

b. Taut stringline (wire) set to grade.

c. Short ski or shoe.

H. Prior to the placement of the plant mix Seal Coat, the entire surface shall be given one complete rolling with a 10 ton minimum tandem steel drum static roller. A minimum tack coat coverage of 0.25 gallons per square yard shall be placed on all non-scarified surfaces to include scarified surfaces which have not been paved within the time limit allowed by this contract or where deemed necessary by the Project Engineer or designated representative at no additional cost to EPIA or City of El Paso.

I. Immediately following placement of the plant mix Seal Coat, the surface shall be given one complete rolling with a 10 ton minimum tandem steel drum static roller to accomplish proper density, as determined by the Project Engineer or designated representative, without undue breakage of the aggregate. The entire surface shall be rolled with a self-propelled pneumatic roller during all hours that placement of materials is in process. Rolling shall continue until no further compression can be obtained and all roller marks are eliminated. The motion of the rollers shall be slow enough at all times so as to avoid displacement of the mix. To avoid adhesion of the mixture to the rollers, the wheels shall be kept moistened with water, with no excess permitted. The cost of rolling shall be included in the cost of Seal Coat.

J. SURFACE TEST. Test for conformity with the specified crown and grade shall be made by the Contractor immediately after initial compaction. Any variation shall be corrected by the removal or addition of materials and by continuous rolling.

The finished surface shall not vary more than 1/8" for the surface course when tested with a stringline applied parallel with, or at right angles to the center line.

After the completion of final rolling, the smoothness of the course shall be tested by the Project Engineer or designated representative; humps or depressions exceeding the specified tolerances shall be immediately corrected by removing the defective work to full depth and width and replacing with new material, as directed by the Project Engineer or designated representative. This shall be done at the Contractor's expense.

The finished surfaces of bituminous courses shall not vary from the gradeline, elevations, and cross sections shown (if available) on the contract drawings by more than 1/4" inch. The Contractor shall correct pavement areas varying in excess of this amount by paving and replacing to full depth and width the defective work at no additional cost to EPIA or

City of El Paso. Skin patching will not be permitted. In the event that the Contractor does not correct said deficiencies, the HMAC/Sealcoat for the entire block existing, within the affected area will not compensated for.

K. The Project Engineer or designated representative will enforce all conditions.

L. Payment shall be made at the contract's unit price per ton of Seal Coat and shall be full compensation for the item completed as herein specified.

VIII. ROLLING

A. One 10 ton minimum three wheel steel static roller or a 16 ton minimum tandem steel drum static roller equipped with an electric water pump, spray bar, hand serviceable nozzles, electronic water flow control, double blade scrapers and a single full width cocoa mat on each wheel, a wheel spray backup system complete with its own water pump, filter and spray bar are required.

1. Adequate safety equipment to include working lights with turn signals and four-way flashers, stop lights, back-up alarm, horn, and a rotating beacon visible to oncoming traffic, are necessary for these rollers.

B. One 10 ton minimum tandem steel drum static roller equipped with an electric water pump, spray bar, hand serviceable nozzles, electronic water flow control, double blade scrapers and a single full-width cocoa mat on each drum, a drum spray back-up system complete with its own water pump, filter and spray bar are required.

1. Adequate safety equipment to include working lights with turn signals and four-way flashers, stop lights, back-up alarm, horn, and a yellow rotating beacon visible to oncoming traffic, are necessary for this roller.

C. One 25-ton minimum pneumatic roller equipped with an electric water pump, spray bar and cocoa mat for each tire, hand serviceable nozzles, electronic water flow control, a tire spray back-up system complete with its own water pump, filter and spray bar are required.

1. Adequate safety equipment to include working lights with turn signals and four-way flashers, stop lights, back-up alarm, horn and a yellow rotating beacon visible to on-coming traffic, are necessary for this roller.

D. Initial break down rolling will be done with a 10 ton three wheel steel static roller or a 16 ton tandem steel drum static roller and finish rolling will be done with a 10 ton tandem steel drum static roller.

E. Rolling shall continue until no further compression can be obtained or density requirements are attained and all roller marks are eliminated. The motion of the roller shall be slow enough at all times to avoid displacement of the mixture. If any displacement occurs it shall be corrected at once.

F. The rollers shall not be allowed to stand on a surface which has not been fully compacted. All wheels are to be kept thoroughly moistened with no excess permitted. In lieu of the rollers specified, the Contractor may upon written permission of the Project

Engineer or designated representative, operate other compacting equipment that will produce the same compaction and attain the required densities as the specified equipment.

G. The Project Engineer or designated representative will enforce all conditions.

H. The cost of rolling shall be included in the cost of HMAC overlay and Seal Coat.

IX. OVERLAY OF SCARIFIED SURFACE OR UN-SCARIFIED SURFACE WITHOUT REJUVENATING AGENT

A. All surfaces to be overlayed shall be tacked with asphaltic material CSS-IH or equal. All contact surfaces of curbs, joints, gutters or structures shall be painted with a thin Coat of asphaltic material. At the discretion of the Project Engineer or designated representative, a tack coat of CSS-IH diluted with water up to, but not exceeding, one part water to one part emulsion may be applied to the surface in quantities of not less than 0.05 gallon nor more than 0.10 gallon per square yard of existing surface. Care shall be taken to prevent splattering of adjacent pavement, curbs and structures. Tack Coat materials shall not be paid for directly, but will become part of the overlay operation.

B. The asphaltic mixture shall be spread on the existing bituminous surface with an approved spreading and finishing machine in such a manner that when properly compacted the finished surface will be smooth and of uniform density. Asphaltic mixture will be placed to a compacted thickness as determined by the Project Engineer or designated representative. Rolling will be as described above in Item VIII.

X. OVERLAY OF SCARIFIED SURFACE WITH REJUVENATING AGENT

A. The HMAC overlay shall be placed on the prepared surface no sooner than 24 hours nor longer than three (3) days after scarifying operations. The asphaltic material shall be spread on the existing scarified surface with an approved spreading and finishing machine in such a manner that when properly compacted the finished surface will be smooth and of uniform density.

B. Asphaltic mixture will be placed to a compacted thickness as determined by the Project Engineer or designated representative and at their discretion the 24-hour minimum open surface may be waived. If waived, the Contractor will receive in writing a concurrence letter within 24 hours of request on an area-by-area basis only.

XI. GENERAL

A. Prior to any work commencing on the project all equipment will be inspected by Project Engineer or designated representative to determine whether the equipment is in safe satisfactory condition. Equipment will be expected to meet and /or exceed all City, County, State and Federal requirements in effect at the time of proposed commencement of work. The Project Engineer or designated representative can reject any piece of equipment proposed for the project, if in his or her determination that piece of equipment will not provide a satisfactory level of performance.

B. All equipment, tools and machines used in the performance of this work shall be maintained in satisfactory working condition at all times.

C. All equipment, plants and machines shall be of a type, size and capacity commensurate with the magnitude of the work to be performed.

D. Asphaltic mixture shall not be placed when temperature is below 55 degrees F. and falling, but may be placed when temperature is 50 degrees F. and rising. Asphaltic mixture can be placed only when the humidity, temperature, and general weather conditions, in the opinion of the Project Engineer or designated representative, are suitable.

E. HMAC overlay must be placed at a minimum rate of 1000 tons per 8-hour day.

F. It shall be the Contractor's responsibility to arrange for all valve boxes, sanitary and storm manhole covers, and any other fixtures existing on any street, to be adjusted/re-adjusted to grade prior to the actual paving process. In the event that a utility needs to be re-adjusted after the paving process has been completed, the Contractor will have five (5) calendar days to repave the area around said utility. If the Contractor does not comply with paving around re-adjusted utility within the 5 calendar days, EPIA will arrange for the utility to be repaved and will invoice the Contractor for all work performed at the end of the month.

G. The Utility Companies must be notified in writing a minimum of 48 hours in advance of commencing work. Notification to the appropriate utilities is the responsibility of the Contractor and must furnish the Project Engineer or designated representative with a copy of notifications. The Contractor will be responsible for securing all raised utilities after initial elevation change and prior to finish paving to include proper traffic control.

H. If valve boxes, manhole covers, or other fixtures are disturbed it is the Contractor's responsibility to assure that the disturbed fixtures are readjusted to proper elevation, adjusting and/or readjustment of utilities and fixtures will be included in the base bid price and at no additional cost to EPIA or City of El Paso.

I. It shall be the Contractor's responsibility to locate ANY monuments prior to commencing work. Existing monuments may cross the project at various locations, therefore; the Contractor shall take every precaution as to prevent damage to any monuments not located but which may be discovered during execution of work. If any are damaged or disturbed, the Contractor will be responsible for the replacement and re-verification of elevations of all damaged or disturbed monuments. Damaged monuments are to be replaced as per City of El Paso Design Standards for Construction. Cost to repair or replace the damaged monuments will be the responsibility of the Contractor and at no additional cost to EPIA or City of El Paso. Re-verifications must be made by a Registered Surveyor appointed by EPIA.

J. The Contractor shall have a Supervisor qualified to make decisions on the job site at all times when scarifying, milling or paving operations are in progress.

K. Upon completion of paving process, the Contractor shall clean all areas of excess material and/or debris to the satisfaction of the Project Engineer or designated representative within 1 month of completion.

In the event that an area is not cleaned within the one (1) month time frame, EPIA will arrange for the clean-up of said area and will invoice the Contractor for any work performed at the end of the month.

L. It shall be the responsibility of the Contractor to provide all traffic control signs, barricades, as required and as approved by the Director of El Paso Streets and Maintenance Department, no less than to meet or exceed the standards set forth by the State and/or Federal Manual on Uniform Traffic Control devices most current at time of work to be undertaken. If in the opinion of the Project Engineer or designated representative insufficient traffic control is placed at a job site, the Contractor will take immediate action upon notice to correct said traffic control or work will cease until traffic control is corrected.

M. The Contractor will provide adequate traffic pavement markings after each phase of work i.e. milling, scarifying and paving is completed at no additional cost to EPIA or City of El Paso.

N. Time lost and/or work stoppage due to equipment break down failures shall be considered time lost for that particular day and no credit will be given for that time lost.

O. It shall also be the responsibility of the Contractor to contact the Police Dispatcher to arrange for the removal of parked vehicles, if necessary.

P. The Contractor can contact the Police Dispatcher to arrange for the removal of parked vehicles only if he has had the approval of the Director of El Paso Streets and Maintenance Department and /or the Project Engineer or designated representative for the placement of "No Parking" signs as provided in the City Code. Such signs must have been erected at least 24 hours before the parking prohibition is to become effective.

Applicable portions of the E1 Paso Municipal Code are as follows:

SEC. 12.44.20. No Parking signs placed during street cleaning or construction.

1. Placing during construction. When any street or drive is being or about to be paved or resurfaced, or when construction work is being or about to be done in the street/drive, and in the opinion of the City Traffic Engineer the parking of vehicles will interfere with traffic or with construction work, or will constitute a hazard, the Traffic Engineer may erect movable signs prohibiting parking in such street, drive or part thereof, during the work, or after a day or time stated.
2. Obedience to signs. When such signs have been erected no person shall park any vehicle in violation of the prohibition indicated by the sign.
3. Removing vehicle upon demand. If a vehicle was parked before the sign was erected and remains parked after the prohibition indicated by the sign becomes effective, any person having control of such vehicle shall remove it from the prohibited area upon demand of the person in charge of the work to be done on the street/drive, or upon demand of any police officer.
4. Removal of vehicle without demand. If the signs authorized by this section were erected at least twenty-four hours before the prohibition is to become effective, it shall be unlawful for any person in control of a vehicle to allow it to remain parked in violation of the prohibition indicated by the sign, notwithstanding the

vehicle was legally parked in the first instance; and in such cases no demand for removal shall be necessary.

Q. As soon as possible, after receiving the list of streets or drives, the Contractor will present to the Project Engineer or designated representative a schedule of no less than two (2) weeks work at a time, with the amount of time to be spent on each street or drive on the list.

R. When this list has been approved by both the Contractor and the Project Engineer or designated representative, it shall be the basis for assessment of liquidated damages, if any.

S. The Contractor must advise the following City Departments: EPIA, El Paso Streets and Maintenance, (EPSAM), Emergency Services District, Quality Air Control Board, Building Official and Police dispatcher, twenty-four hours in advance of commencing work on each area.

T. The Contractor will transport all equipment (milling, scarifying, recycler and paving, etc.) to and from job sites so as not to damage or scar any new or existing pavements. This shall be done by City, State and Federal approved transports (i.e. lowboy or pneumatic wheels).

If any damage or scaring of any new or existing pavements should occur the Contractor shall be responsible for the complete replacement overlay. Any and all expenses incurred shall be the responsibility of the Contractor and at no additional cost to EPIA or City of El Paso. Limits of replacement shall be established by the Project Engineer or designated representative.

U. The Project Engineer or designated representative will enforce all these requirements.

V. The Contractor must ensure that all employees wear all safety apparel which is standard to this type of industry, (Hard hats and reflective safety vest, etc.) while on the job site.

W. The Project Engineer or designated representative will enforce these conditions.

X. The Contractor must give the Project Engineer or designated representative a 48-hour notice prior to leaving the job site.

Time: 6:00 a.m. to 6:00 p.m.

Y. At any time the Project Engineer or designated representative may require that the work cease or the workday be reduced in the event that weather or other conditions will have an adverse effect on the work.

Z. A working day constitutes, any day from Monday through Friday.

END OF SECTION 321218

SECTION 321220 – STORM SEWER PIPE INSTALLATION

Division I Specification Sections, as indexed, shall also apply to this section.

1.1 GENERAL

A. All storm sewer piping, as shown on the drawings, shall be installed as specified herein. All materials shall be installed in accordance with the approved recommendations of the manufacturer, shall conform to these specifications and shall be accomplished by workmen skilled in the type of work to be performed.

1.2 TRENCHING

Pipe trenches shall be excavated to the lines, and grades shown on the drawings or as established by the Engineer or representative. The minimum width of the trench at the spring line of the pipe shall be the outside diameter of the pipe plus twelve (12) inches and the maximum width shall be the outside diameter of the pipe plus twenty-four (24) inches.

Where special pipe bedding is not required, the trench shall be excavated to an even grade so that the bottom of the pipe will rest on the bottom of the trench throughout the entire length of the pipe. In order to obtain a true even grade the trench shall be fine graded and shaped to fit the bottom 90° of the pipe shown on the drawings. Any part of the trench excavated below grade shall be corrected by filling with approved material and thoroughly compacting. If rock or other unyielding material is encountered in bottom of the trench, it shall be removed to a depth of twelve (12) inches below grade, refilled with selected materials and thoroughly compacted to grade as per manufacturer's requirements. Where the soil encountered at established footing grade is a quicksand, muck, or similar unstable material, the following procedure shall be used unless other methods are called for on the plans.

The depth to which unstable material is removed shall not exceed two feet below the footing of culverts that are two feet or more in height, and shall not exceed the height of culverts for those less than two (2) feet high unless otherwise directed by the Engineer or representative. Excavation shall be carried at least one (1) foot horizontally beyond the limits of the structure on all sides. All unstable soil removed shall be replaced with suitable stable material, in uniform layers of suitable depth for compaction.

Each layer shall have the proper moisture content and shall be compacted by adequate rolling or tamping as required to provide a stable foundation for the structure. Soil which has sufficient stability to properly sustain the adjacent sections of the roadway embankment will be considered a suitable foundation material.

Bell holes of ample dimensions shall be dug at each joint to permit the jointing of the pipe to be made properly.

Trench digging machinery may be used to make trench excavations except in places where operation of same would cause damage to existing structures either above or below ground; in such instances, hand methods shall be employed. The Contractor shall locate all existing underground lines, of which he has been advised whether or not they are shown on the drawings, sufficiently in advance of trenching operations to prevent any damage thereto.

Extreme care shall be used to prevent such damage and the Contractor shall be fully responsible for damage to any such lines.

There will be no classification of excavated materials and all materials encountered shall be excavated as required. Adjacent structures shall be protected from damage by construction equipment. All excavated material shall be piled along the trench in a manner which will not endanger the work.

Excavation for manholes or junction boxes shall be made as required to provide space for constructing the structure. In paved areas, manhole excavations shall be kept to the minimum required to construct the manhole and any excess pavement removed shall be replaced at the expense of the Contractor.

Trench Safety: As required by Regulatory Code, the Contractor shall provide adequate trench safety design prepared by a Licensed Professional Engineer. Contractor shall install a trench safety system for all trenches exceeding a depth of five (5) as per OSHA standards.

1.3 INSTALLATION OF PIPE

A. HANDLING OF PIPE AND ACCESSORIES

All pipe, fittings, valves and other accessories shall, unless otherwise directed, be unloaded at the point of delivery, hauled to and distributed at the site of the work by the Contractor.

In loading and unloading, they shall be lifted by hoist or slid or rolled on skid-way in such a manner as to avoid shock or damage to the materials. Under no circumstances shall they be dropped. Pipe handled on skid-ways must not be skidded or rolled against pipe already on the ground.

B. PIPE INSTALLATION IN TRENCH

A pipe bed shall be prepared as shown on the drawings by compacting twelve (12) inches of the shaped subgrade to 95% as determined by ASTM D-1557. Pipe with less than two (2) feet of cover shall lie bedded in cement stabilized material. After the trench has been excavated and the pipe bed properly fine graded and compacted in accordance with the details on the drawings, the pipe shall be laid in accordance with the manufacturer's recommendations or the following specifications, whichever is more stringent. Each length of pipe shall be inspected for defects immediately before it is laid. Any defective pipe which has been damaged by mishandling or any other cause shall be replaced with satisfactory pipe by the Contractor at his expense. Immediately after a length of concrete pipe is lowered in the trench, all dirt and foreign substance in the bell and rubber gasket groove shall be removed. Then the bell shall be lubricated liberally by rubbing lubricant over the inside surfaces and leading edge of the bell. The lubricant shall be flax soap or an approved equal. The rubber gasket shall also be lubricated thoroughly before stretching the gasket around the spigot. After lubricating the gasket, the gasket shall be fit carefully by stretching the gasket and snapping it into the groove. A small tool shall be inserted between the gasket and groove and run around the circumference to equalize the rubber gasket stretch. Position the bell by removing the sub-base below the bell. Afterwards, align the spigot with the bell of pipe previously laid. Check if the gasket is in contact with the flared bell surface around the entire circumference before coupling the pipe. Then couple the joint by pulling the spigot straight into the bell by utilizing a winch, come-along or other approved method. A steady uniform force shall be used. Pipe laying shall

proceed upgrade with spigot ends pointing downgrade. All pipe shall be laid true to the lines and grades as established by the Engineer or representative. Grade may be established by laser beam or batter boards (not exceeding fifty (50) foot intervals) and a string line shall be used and each length of pipe set to grade from the string line with a grade rod equipped with a "shoe" designed to set in the flow line of the pipe. At least three (3) batter boards shall be in position at a time.

The work shall be watertight at all joints and any leaks or defects shall be immediately repaired. Any pipe which has been disturbed from any cause after being laid in its final position shall be taken up, the joint cleaned and the pipe properly re-laid.

C. BACKFILLING

All trenches shall be backfilled in accordance with this section as soon as practicable after the pipe has been installed with the specified bedding condition. Wherever the cover is less than three and a half (3-1/2) feet from the top of pavement to the top of pipe, cement flowable fill will be used as specified on plans.

1. Selected Fill: Selected fill shall be placed around the pipe up to a distance of twelve (12) inches over the pipe. The selected fill shall be the most granular material available from the excavation spoil bank. The material shall be free from rocks, boulders, or other unsuitable material. The selected fill material shall be placed carefully under and around the pipe and thoroughly compacted in six (6) inch layers with approved mechanical tamps until a minimum density equal to that of 95% of maximum density as determined by ASTM D1557. Refer to Geotechnical Investigation for additional specifications on satisfactory soil for fill material.

2. Backfill: The backfill material installed above the selected fill shall be the remaining material from the excavation soil bank. Backfill shall be free of vegetation and trash. The pipe shall be protected from impact by large boulders, etc. Backfill shall be placed in lifts not exceeding eight (8) inches and shall be compacted to 95% of maximum density as determined by ASTM D-1557. Trenching in asphalt and/or concrete pavement sections and below the proposed improvements shall have 95% density as per ASTM D-1557.

   Following the completion of the backfilling, the Contractor will maintain the area and trench surfaces, in a satisfactory manner until final completion and acceptance of the proposed improvements. The maintenance shall include blading from time to time as necessary, filling depressions caused by settlement, periodic watering to keep the dust down and other work required to keep the streets, roads, drives and improvements in satisfactory condition for traffic and other trench areas in a presentable manner.

1.4 PROTECTION OF EXISTING IMPROVEMENTS

A. During construction, care shall be exercised to prevent damage to existing facilities. Any facilities damaged as a result of the construction shall be repaired or replaced at the Contractor's expense to the satisfaction of the City of El Paso and EPIA. Any removed signs shall be replaced.

1.5 SAFETY TO THE PUBLIC

A. The Contractor shall provide, erect, and maintain all necessary barricades, suitable and sufficient flasher lights, flag-men, danger signals, and signs; and shall take all necessary precautions for the protection of the work and the safety of the public. Roads closed to traffic shall be protected by effective barricades on which shall be placed acceptable warning and detour signs. All barricades and obstructions shall be illuminated at night by lights kept burning from sunset until sunrise. Refer to the drawings for further information.

END OF SECTION 321220

SECTION 321221 – REINFORCED CONCRETE PIPE

Division I Specification Sections, as indexed, shall also apply to this section.

I. GENERAL

A. SUMMARY. This section shall govern the materials and details of construction of concrete storm sewer pipelines to be used in this project. The Contractor shall furnish all materials, equipment, tools, labor and superintendence and all incidentals required for construction of these items as shown on the drawings and specified herein.

B. SUBMITTALS. Manufacturer's certificate for pipe and related appurtenances, certifying that products meet specified requirements.

II. SCHEDULE OF PIPE. Approved pipe shall be used in the construction of all pipelines and connections. The only types of pipe, which shall be considered for use, are those listed in this section. All pipe of like sizes shall be of the same type and class. Acceptable types and classes of pipe which may be approved for the various items of work are shown on the following schedule:

Size and Use	Type	Pipe Class
Drainage: (Sizes as indicated on plans)	ASTM C-76	Type III (as indicated on plans)

III. PIPE MATERIALS.

A. REINFORCED CONCRETE PIPE. Except as modified herein, materials, manufacture and design of pipe shall conform to ASTM C-76 for Circular Pipe, ASTM C-506 for Arch Pipe and ASTM C-507 for Elliptical Pipe. All pipe shall be machine made or cast by a process which will provide for uniform placement of the concrete in the form and compaction by mechanical devices which will assure a proportioned and mixed in batch mixers with such proportions of cement and water as will produce a homogenous concrete mixture of such quality that the pipe will to conform to the test and design requirements of these specifications. All pipe shall be manufactured with Type II cement. Transit mixed concrete will not be acceptable for use in precast concrete pipe. To insure that an acceptable quality product is being produced, quality control testing will be accomplished by an independent testing laboratory as specified herein. The testing laboratory shall be selected by the Owner and paid by the Owner.

The performance of the rubber gasket joints shall be tested by means of hydrostatics pressure tests. The tests shall be performed, once for each 300 pieces of pipe manufactured, in accordance with ASTM Designation C-443 in both the straight position and deflected position. The two sections of pipe shall be subjected to an internal hydrostatic pressure of 10 psi for 10 minutes and checked for leakage. If the joint passes the straight alignment test, it shall then be placed in the deflected position and tested again as before.

The pipe manufacturer shall furnish all equipment, material and personnel required for performing the three-edge-bearing test, for securing the pipe cores and for performing the hydrostatic pressure tests. The breaking of concrete cores, the checking of steel placement, the

absorption tests, the selection of specimens to be tested and the witnessing of all tests shall be done by an independent testing laboratory at no cost to the Contractor or pipe manufacturer. The pipe manufacturer shall assist the laboratory in securing samples for all tests required.

The shell thickness, the amount of circumferential reinforcement and the strength of the pipe shall conform to the specified Class as summarized in ASTM C-76 for Circular Pipe, C-506 for Arch Pipe, C-507 for Elliptical Pipe or C-655 at the manufacturer's option.

The acceptability of the pipe shall be determined by the results of the three-edge-bearing test for the load to produce the 0.01 inch crack and if required by the Project Engineer, the ultimate load; by the appropriate material tests on selected samples from the wall of the pipe; and by inspection of finished pipe to determine its conformance with the design prescribed in these specifications and its freedom from defects. Three-edge-bearing tests for both the 0.01 inch crack and the ultimate load shall be performed on one pipe for each 100 pipe, or fraction thereof, for each type size and class. The methods of testing shall conform to ASTM Designations C-497.

As an alternate to the three-edge-bearing test, concrete pipe 60 inches in diameter and over may be accepted, at the option of the manufacturer, on the basis of material tests and inspection of the completed product. Acceptability of pipe on this basis shall be determined by the results of material tests as required in ASTM Designation: C-76; C-506 or C-507 or C-655 as applicable; by crushing tests on cores taken from the barrel of the completed and cured pipe; by absorption tests on samples from the wall of the pipe; and by inspection of the finished pipe; by absorption tests on samples from the wall of the pipe; and by inspection of the finished pipe including amount and placement of reinforcement, to determine its conformance with the design prescribed in these specifications and its freedom from defects. The pipe shall be cured by the Steam Curing Method or Water Curing Method or a combination of both as described in ASTM C-76, provided the required concrete comprehensive strength is attained. Pipe shall be manufactured without lift holes.

The pipe joints shall be Bell and Spigot. Bell and Spigot type joints shall be manufactured and design in conformance to ASTM C-361.

Steel requirements shall be in accordance with ASTM C-76, C-506, C-507, or C-655 as applicable. If elliptical reinforcement is used, pipe shall be marked "TOP" or "T" for proper orientation in the trench.

The pipe manufacturer shall furnish and make available to Project Engineer the necessary apparatus to check that the pipe manufactures tolerances allowed by these specifications. This apparatus shall consist of the necessary gauges and truing rings required to check any dimension upon which an allowable tolerance is established.

The minimum laying length of each standard joint shall be 7' – 6" except for bends, radius pipe or special joints at structures. The maximum laying length of the joint of pipe immediately before and after a manhole structure shall be 4' – 0".

Shop drawings of special pipe joints, such as bends or tapers for radius pipe at the inverted siphons, shall be submitted to the Project Engineer for approval before the special pipe is manufactured.

The Project Engineer shall at all times have free access to the manufacturer's plant while production is in progress, and may at any time refuse to accept pipe made when the plant is failing to follow the stipulations of ASTM Designation C-76, or of these specifications in regard to workmanship, or failing to comply to such things as strength, position of reinforcing steel, curing, absorption, allowable tolerances, etc. The Project Engineer may reject the pipe if adequate means and methods are not provided to insure the manufacture of a product of uniform high quality.

B. RUBBER GASKETS (For storm sewer pipe). "Gaskets for Bell and Spigot joints shall be of a solid circular cross-section and shall be extruded or molded and cured in such a manner that any cross-section will be dense, homogenous, and free of porosity, blisters, pitting and other imperfections. The gasket shall conform to ASTM C-361."

The gasket shall be "O" ring type, circular in cross-section, Delta Section or approved equal. The gasket shall be designed to fit into a notch or indention in the spigot of the pipe.

The rubber gasket shall be an integral part of the joint design and all dimensions and variations of both the rubber gasket and the concrete surface shall not exceed the tolerances specified in ASTM C-443 or herein when acting as a unit.

IV. MANHOLES. Manholes for the various sized lines shall be either standard (Type "A"), special (Type "B") for storm sewer manholes, or special storm junction boxes (Type "C") constructed at the locations and in accordance with the details shown on the plans and as specified herein.

Manholes and junction boxes shall be supported by a minimum eight (8) inches of compacted crushed aggregate base course, TxDOT Type "A", Grade 1. The base course shall be compacted to a density of not less than 100% of the maximum density as determined by ASTM D1557. The suitable subgrade soil that shall support the base course material shall be compacted to at least 95% of the maximum density as determined by ASTM D1557.

The manhole frame and cover shall be of cast iron of the weight, dimensions and pattern shown on the plans. The casting shall be made from a superior quality, gray cast iron conforming to the requirements of ASTM Designation A-48 (latest revision).

All pipe openings in the manhole base sections and risers shall have a compression type flexible pipe to manhole connector conforming to the requirements of ASTM C-923, as manufactured by A-Lok Products Corporation or equal.

Concrete for manhole foundations shall be as specified in Section 321313 - Cast-In-Place Site Concrete.

The Project Engineer reserves the right to inspect the manufacturing process at any time, to make test on materials used, and to have cores cut out of the completed manholes for compressive strength testing and placement of reinforcement.

V. INSTALLATION. The manholes shall be constructed at the locations shown on the plans or as directed by the Project Engineer and in accordance with the details shown on the plans and as specified herein. After the excavation has been completed, the concrete base or bottom shall be poured. When the concrete has sufficiently set, the riser work may proceed. After the manhole riser has been completed, the invert shall be neatly formed in the bottom of the manhole with

concrete. The invert shall have a true curve of as large a radius as the size of the manhole will permit and shall be given a smooth trowel finish.

The subgrade under manhole bases shall be compacted to 95% density in accordance with ASTM D1557.

VI. GRATING INLETS. Inlets for the various sized lines shall be Type I and Type III constructed at the locations and in accordance with the details shown on the plans and as specified herein.

Inlets shall be supported by a minimum eight (8) inches of compacted crushed aggregate base course material, TxDOT Type "A", Grade 1. The base course shall be compacted to a density of not less than 100% of the maximum density as determined by ASTM D1557. The suitable subgrade soil that shall support the base course material should be compacted to at least 95% of the maximum density as determined by AST D1557.

VII. UTILITY RELOCATION. Existing water, sanitary sewer, gas, utility poles, electric and telephone lines cross the project at various locations. The Contractor shall take every precaution to prevent damage to any utility lines or power poles not shown on the drawings, but which may be discovered during execution of the work. The Contractor shall be responsible for the location and protection of all utility lines including fiber optic lines encountered within the work zone whether shown on the Project Documents or not.

The Contractor will be responsible to coordinate with all utility companies.

END OF SECTION 321221

SECTION 321313 – CAST IN PLACE SITE CONCRETE

I. GENERAL

A. RELATED DOCUMENTS. Drawings and general provisions of Contract, including Division I Specification Sections, apply to this Section.

B. SUMMARY. This section specifies cast-in place site concrete, including formwork, reinforcing, mix design, placement procedures, and finishes.

C. SUBMITTALS

1. General. Submit the following in accordance with Division I Specification Sections.

2. Product data for proprietary materials and items, including reinforcement and forming accessories, admixtures, patching compounds, curing compounds, and others as requested by the Project Engineer.

3. Shop drawings for reinforcement, prepared by a registered Professional Engineer for fabrication, bending, and placement of concrete reinforcement. Comply with ACI SP-66 (88), "ACI Detailing Manual," showing bar schedules, stirrup spacing, diagrams of bent bars, and arrangement of concrete reinforcement. Include special reinforcement required for openings through concrete structures.

4. Laboratory test reports for concrete materials and mix design test.

5. Samples: Submit samples of materials as requested by Project Engineer including names, sources and descriptions.

6. Materials certificates in lieu of materials laboratory test reports when permitted by the Project Engineer. Materials certificates shall be signed by manufacturer and Contractor, certifying that each material item complies with or exceeds specified requirements. Provide certification from admixture manufacturers that chloride content complies with specification requirements.

D. QUALITY ASSURANCE

1. Codes and Standards. Comply with provisions of following codes, specifications, and standards, except where more stringent requirements are shown or specified:

a. ACI 301, ACI 614, CRSI Manual, ASTM C94.

b. ACI 318, "Building Code Requirements for Reinforced Concrete."

c. Concrete Reinforcing Steel Institute (CRSI), "Manual of Standard Practice."

2. Materials and installed work may require testing and retesting at any time during progress of work. Tests, including retesting of rejected materials for installed work, shall be done at Contractor's expense.

II. PRODUCTS

A. FORM MATERIALS

1. Forms for Exposed Finished Concrete. Plywood, metal, metal-framed plywood faced, or other acceptable panel-type materials, to provide continuous, straight, smooth, exposed surfaces. Furnish in largest practicable sizes to minimize number of joints and to conform to joint system shown on drawings.

2. Forms for Unexposed Finished Concrete. Plywood, lumber, metal, or other acceptable material. Provide lumber dressed on at least 2 edges and one side for tight fit.

3. Form Coatings. Provide commercial formulation form-coating compounds with a maximum VOC of 350 mg/l that will not bond with, stain, or adversely affect concrete surfaces and will not impair subsequent treatments of concrete surfaces.

4. Form Ties. Factory-fabricated, adjustable-length, removable or snap-off metal form ties, designed to prevent form deflection and to prevent spalling concrete upon removal. Provide units that will leave no metal closer than 1-1/2” to exposed surface.

   Provide ties that, when removed, will leave holes not larger than 1” diameter in concrete surface.

5. Earth as Forms. Footings may be formed by using the excavated earth surfaces. Earth forms may be used only if the cut earth surfaces can maintain their shape without risk of cave-in. Provide smooth, even and true vertical or horizontal planes for sides and bottoms of earth forms.

B. REINFORCING MATERIALS

1. Reinforcing Bars. ASTM A 615, Grade 60.

2. Steel Wire. ASTM A 82, plain, cold-drawn steel.

3. Welded Wire Fabric. ASTM A 185, welded steel wire fabric.

4. Supports for Reinforcement. Bolsters, chairs, spacers, and other devices for spacing, supporting, and fastening reinforcing bars and welded wire fabric in place. Use wire-bar-type supports complying with CRSI specifications.

   For slabs-on-grade, use supports with sand plats or horizontal runners where base material will not support chair legs.

   For exposed-to-view concrete surfaces, where legs of supports are in contact with forms, provide supports with legs that are plastic protected (CRSI, Class 1) or stainless steel protected (CRSI, Class 2).

C. CONCRETE MATERIALS

1. Portland Cement. ASTM C 150, Type “I”.

2. Use one brand of cement throughout project unless otherwise acceptable to Engineer.

3. Fly Ash. ASTM C 618, Type “C” or Type “F”.

4. Normal Weight Aggregates. ASTM C 33 and as herein specified. Provide aggregates from a sign source for exposed concrete.

   For exterior exposed surfaces, do not use fine or coarse aggregates containing spalling-causing deleterious substances.

   Local aggregates not complying with ASTM C 33 but that special tests or actual service have shown to produce concrete of adequate strength and durability may be used when acceptable to the Project Engineer.

5. Water. Potable.

6. Admixtures – General. Provide admixtures for concrete that contain not more than 0.1 percent chloride ions.

7. Air-Entraining Admixture. ASTM C 260, certified by manufacturer to be compatible with other required admixtures. The Portland Cement Concrete shall be air-entrained to result in a 4% plus/minus 1% air.

   a. Available Products. Subject to compliance with requirements, products that may be incorporated in the work include, but are not limited to, the following:

      i. “Air-Tite,” Cormix.

      ii. “Air-Mix” or “Perma-Air,” Euclid Chemical Co.

      iii. “Darex AEA” or “Daravair,” W.R. Grace & Co.

      iv. “MB-VR” or “Micro-Air,” Master Builders, Inc.

      v. “Sealtight AEA,” W.R. Meadows, Inc.

      vi. “Sika AER,” Sika Corp.

8. Water-Reducing Admixture. ASTM C 494, Type “A”.

   a. Available Products. Subject to compliance with requirements, products that may be incorporated in the work include, but are not limited to, the following:

      i. “Chemtard,” ChemMasters Corp.

      ii. “PSI N,” Cormix.

      iii. “Eucon WR-75,” Euclid Chemical Co.

      iv. “WRDA,” W.R. Grace & Co.

      v. “Pozzolith Normal” or “Polyheed,” Master Builders, Inc.

      vi. “Prokrete-N,” Prokrete Industries.

      vii. “Plastocrete 161,” Sika Corp.

9. High-Range Water-Reducing Admixture (Super Plasticizer). ASTM C 494, Type "F" or Type "G".

    a. Available Products. Subject to compliance with requirements, products that may be incorporated in the work include, but are not limited to, the following:

        i. "Super P," Anti-Hydro Co., Inc.

        ii. "PSI Super," Cormix.

        iii. "Eucon 37," Euclid Chemical Co.

        iv. "WRDA 19" or "Daracem," W.R. Grace & Co.

        v. "Rheobuild," Master Builders, Inc.

        vi. "PSP", Prokrete Industries.

        vii. "Sikament 300," Sika Corp.

10. Water Reducing Accelerating Admixture. ASTM C 494, Type "E".

    a. Available Products. Subject to compliance with requirements, products that may be incorporated in the work include, but are not limited to, the following:

        i. "Q-Set," Conspec Marketing & Manufacturing Co.

        ii. "Gilco Accelerator," Cormix.

        iii. "Accelguard 80," Euclid Chemical Co.

        iv. "Daraset," W.R. Grace & Co.

        v. "Pozzutec 20," Master Builders, Inc.

11. Water-Reducing, Retarding Admixture. ASTM C 494, Type "D".

    a. Available Products. Subject to compliance with requirements, product that may be incorporated in the work include, but are not limited to, the following:

        i. "A-H 3 Way Sealer," Anti-Hydro Co., Inc.

        ii. "PSI-R Plus," Cormix.

        iii. "Eucon Retarder 75," Euclid Chemical Co.

        iv. "Daratard-17," W.R. Grace & Co.

        v. "Pozzolith R," Master Builders, Inc.

        vi. "Protard," Prokrete Industries.

        vii. "Plastiment," Sika Corp.

D. RELATED MATERIALS

1. Absorptive Cover. Burlap cloth made from jute or kenaf, weighing approximately 9 oz per sq. yd., complying with AASHTO M 182, Class 2.

2. Moisture-Retaining Cover. One of the following, complying with ASTM C 171.

3. Waterproof Paper.

4. Polyethylene Film.

5. Polyethylene-coated Burlap.

6. Liquid Membrane-Forming Curing Compound. Liquid-type membrane forming curing compound complying with ASTM C 309, Type "I", Class A. Moisture loss not more than 0.055 gr./sq. cm. when applied at 200 sq. ft./gal.

   a. Available Products. Subject to compliance with requirements, products that may be incorporated in the work include, but are not limited to, the following:

      i. "A-H 3 Way Sealer," Anti-Hydro Co., Inc.

      ii. "Spartan-Cote," The Burke Co.

      iii. "Conspec #1," Conspec Marketing & Mfg. Co.

      iv. "Hardtop," Cormix.

      v. "Day-Chem Cure and Seal," Dayton Superior Corp.

      vi. "Eurocure," Euclid Chemical Co.

      vii. "Horn Clear Seal," A.C. Horn, Inc.

      viii. "L&M Cure," L & M Construction Chemicals, Inc.

      ix. "Masterkure," Master Builders, Inc.

      x. "CS-309," W.R. Meadows, Inc.

      xi. "LR-151," Prokrete Industries.

      xii. "Kure-N-Seal," Sonneborn-Rexnord.

      xiii. "Stontop CS2," Stonhard, Inc.

7. Water-Based Acrylic Membrane Curing Compound. ASTM C 309, Type "I", Class B.

   a. Available Products. Subject to compliance with requirements, products that may be incorporated in the work include, but are not limited to, the following:

      i. "Highseal," Conspec Marketing and Mfg. Co.

      ii. "Safe Cure and Seal," Dayton Superior Corp.

iii. "Aqua-Cure," Euclid Chemical Co.

iv. "Dress & Seal #18WB," L & M Construction Chemicals, Inc.

v. "Masterseal W," Master Builders, Inc.

vi. "Intex," W.R. Meadows, Inc.

vii. "Sika Membrane," Sika Corp.

8. Evaporation Control. Monomolecular film-forming compound applied to exposed concrete slab surfaces for temporary protection from rapid moisture loss.

a. Available Products. Subject to compliance with requirements, products that may be incorporated in the work include, but are not limited to, the following:

i. "Aquafilm," Ardex, Inc.

ii. "Eucobar," Euclid Chemical Co.

iii. "E-Con," L & M Construction Chemicals, Inc.

iv. "Confilm," Master Builders, Inc.

E. PROPORTIONING AND DESIGN OF MIXES

1. Prepare design mixes for each type and strength of concrete by either laboratory trial batch or field experience methods as specified in ACI 301. If trial batch method used, use an independent testing facility acceptable to the Owner and Project Engineer for preparing and reporting proposed mix designs. The testing facility shall not be the same as used for field quality control testing.

2. Limit use of fly ash to not exceed 20 percent of cement content by weight.

3. Submit written reports to the Project Engineer of each proposed mix for each class of concrete at least 15 days prior to start of work. Do not begin concrete production until proposed mix designs have been reviewed by Project Engineer.

4. Design mixes to provide normal weight concrete with the following properties, as indicated on drawings and schedules:

- Standard Site Work Concrete: 3,000-psi (TxDOT Class A), 28-day compressive strength; W/C ratio: 0.46 maximum unless otherwise noted on Construction Documents.
- Drainage Structures (Flumes): 3,500-psi (TxDOT Class C), 28-day compressive strength; W/C ratio: 0.46 maximum unless otherwise noted on Construction Documents.
- Reinforced Concrete Pavement: 5,000-psi (TxDOT Class P), 28-day compressive strength; W/C ratio: 0.46 maximum unless otherwise noted on Construction Documents.

5. Adjustment to Concrete Mixes. Mix design adjustment may be requested by Contractor when characteristics of materials, job conditions, weather, test results, or other circumstances warrant, as accepted by the Project Engineer. Laboratory test data for revised mix design and strength results must be submitted to and accepted by the Project Engineer before using in work.

6. Pumped Concrete. When Contractor elects to pump concrete, as approved by the Project Engineer, provide concrete in accordance with these specifications to suit the requirements of the equipment to be used. All concrete mixes required for pumping shall be designed by the testing laboratory at the Contractor's expense.

F. ADMIXTURES

1. Calcium chloride or admixtures containing more than 0.1% chloride ions are not permitted.

2. Use water-reducing admixture or high-range water-reducing admixture (Superplasticizer) in concrete as required for placement and workability.

3. Use non-chloride accelerating admixture in concrete slabs place at ambient temperatures below 50 degrees F (10 degrees C).

4. Use high-range water-reducing admixture (HRWR) in pumped concrete, concrete for industrial slabs, architectural concrete, parking structure slabs, concrete required to be watertight, and concrete with water/cement ratios above 0.46.

5. Use air-entraining admixture in all concrete. Add air-entraining admixture at point of placement having 4% total air content with a tolerance of plus or minus 1 percent.

6. Use admixtures for water reduction and set control in strict compliance with manufacturer's directions.

7. Slump Limits. Proportion and design mixes to result in concrete slump at point of placement as follows:

   a. Ramps, slabs, pavement, swales, concrete drainage structures, aprons, sidewalks: 3 inches.

   b. Concrete rip-rap, curb/gutter, and flumes: 2 inches.

   c. Other concrete. Provide as scheduled.

G. RIGID PAVEMENT

1. Rigid concrete pavement consisting of 7.0 inches of 5,000 psi concrete underlain by 4 inches of crushed aggregate base course and eight (8) inches of prepared and compacted structural fill or suitable subgrade soils.

2. Reinforcing steel as specified on the Project Documents.

3. Proper finishing of concrete pavement requires the use of sawed and sealed joints, in accordance with current Portland Cement Association Guidelines.

4. Joint spacing is recommended at 15 foot intervals for concrete pavement. Dowel bars, as shown on the project documents, shall be used to transfer loads at the transverse joints.

5. Joint Sealing Compound: Where joints in concrete construction are shown to be sealed, the joint sealing compound shall be a two-component polyurethane sealant specifically recommended by the manufacturer for use on airport runways, taxiways, and aprons. The handling prior to sealing shall be in strict accordance with the recommendations of the manufacturer. Joint sealing compound shall be Sikaflex-68TF, Dow Corning 890-SL or Engineer approved equivalent.

H. CONCRETE MIXING

1. Ready-Mix Concrete. Comply with requirements of ASTM C 94, and as specified.

   a. Delete references for allowing additional water to be added to batch for material with insufficient slump. Addition of water at the job site will not be permitted.

2. During hot weather, or under conditions contributing to rapid setting of concrete, a shorter mixing time than specified in ASTM C94 may be required.

   a. When air temperature is between 85 degrees F (30 degrees C) and 90 degrees F (32 degrees C), reduce mixing and delivery time from 1-1/2 hours to 75 minutes, and when air temperature is above 90 degrees F (32 degrees C), reduce mixing and delivery time to 60 minutes.

3. Do not permit trucks containing rejected concrete to return to the project site on the same day.

III. EXECUTION

A. GENERAL. Coordinate the installation of joint materials with placement of forms and reinforcing steel.

B. FORMS

1. General. Design, erect, support, brace, and maintain formwork to support vertical and lateral, static and dynamic loads that might be applied until concrete structure can support such loads. Construct formwork so concrete members and structures are of correct size, shape, alignment, elevation, and position. Maintain formwork construction tolerances complying with ACI-347.

   Construct forms to sizes, shapes, lines, and dimensions shown and to obtain accurate alignment, location, grades, level, and plumb work in finished structures. Provide for openings, offsets, sinkages, keyways, recesses, moldings, rustications, reglets, chamfers, blocking, screeds, bulkheads, anchorages and inserts, and other features required in work. Use selected materials to obtain required finishes. Solidly butt joints and provide backup at joints to prevent leakage of cement past.

   Fabricate forms for easy removal without hammering or prying against concrete surfaces. Provide crush plates or wrecking plates where stripping may damage cast concrete surfaces. Provide top forms for inclined surfaces where slope is too steep to place concrete

with bottom forms only. Kerf wood inserts for forming keyways, reglets, recesses, and the like, for easy removal.

Provide temporary openings where interior area of formwork is inaccessible for cleanout, for inspection before concrete placement, and for placement of concrete. Securely brace temporary openings and set tightly to forms to prevent loss of concrete mortar. Locate temporary openings in forms at inconspicuous locations.

Chamfer exposed corners and edges as indicated, using wood, metal, PVC, or rubber chamfer strips fabricated to produce uniform smooth lines and tight edge joints.

2. Provisions for Other Trades. Provide openings in concrete formwork to accommodate work of other trades. Determine size and location of openings, recesses, and chases from trades providing such items. Accurately place and securely support items built into forms.

3. Cleaning and Tightening. Thoroughly clean forms and adjacent surfaces to receive concrete. Remove chips, wood, sawdust, dirt, or other debris just before concrete is placed. Retighten forms and bracing before concrete placement as required to prevent mortar leaks and to maintain proper alignment.

C. PLACING REINFORCEMENT

1. General. Comply with Concrete Reinforcing Steel Institute's recommended practice for "Placing Reinforcing Bars," for details and methods of reinforcement placement and supports and as herein specified.

Avoiding cutting or puncturing vapor retarder during reinforcement placement and concreting operations.

Clean reinforcement of loose rust and mill scale, earth, ice, and other materials that reduce or destroy bond with concrete.

Accurately position, support, and secure reinforcement against displacement. Locate and support reinforcing by metal chairs, runners, bolsters, spacers, and hangers, as approved by the Project Engineer.

Place reinforcement to obtain at least minimum coverages for concrete protection. Arrange, space, and securely tie bars and bar supports to hold reinforcement in position during concrete placement operations. Set wire ties so ends are directed into concrete, not toward exposed concrete surfaces.

Install welded wire fabric in as long lengths as practicable. Lap adjoining pieces at least one full mesh and lace splices with wire. Offset laps of adjoining widths to prevent continuous laps in either direction.

D. JOINTS

1. Construction Joints. Locate and install construction joints as indicated or, if not indicated, locate so as not to impair strength and appearance of the structure, as acceptable to the Project Engineer.

Provide keyways at least 1-1/2 inches deep in construction joints in walls and slabs and between walls and footings. Accepted bulkheads designed for this purpose may be used for slabs.

Place construction joints perpendicular to main reinforcement. Continue reinforcement across construction joints.

Joint filler and joint sealant materials are specified on the Construction Documents.

E. INSTALLATION OF EMBEDDED ITEMS

1. General. Set and build into work anchorage devices and other embedded items required for other work that is attached to or supported by cast-in-place concrete. Use setting drawings, diagrams, instructions, and directions provided by suppliers of items to be attached thereto.

2. Forms for Slabs. Set edge forms, bulkheads, and intermediate screed strips for slabs to obtain required elevations and contours in finished surfaces. Provide and secure units to support screed strips using strike-off templates or compacting type screeds.

F. PREPARATION OF FORM SURFACES

1. General. Coat contact surfaces of forms with an approved nonresidential, low-VOC, form-coating compound before reinforcement is placed.

   Do not allow excess form-coating material to accumulate in forms or to come into contact with in-place concrete surfaces against which fresh concrete will be placed. Apply in compliance with manufacturer's instructions.

G. CONCRETE PLACEMENT

1. Inspection. Before placing concrete, inspect and complete formwork installation, reinforcing steel, and items to be embedded or cast in. Notify other crafts to permit installation of their work; cooperate with other trades in setting such work.

2. Engineer Inspection. Review by the Owner, Project Engineer or his designated representative does not relieve the Contractor from complying with the requirements of the Construction Documents and Specifications.

   a. Notify Project Engineer, Owner or his designated representative at least twenty four (24) hours prior to the placing of any concrete. Placing of concrete without notice to the individuals listed herein may be reason for rejecting concrete so placed.

3. General. Comply with ACI 304, "Recommended Practice for Measuring, Mixing, Transporting, and Placing Concrete," and as herein specified.

   Deposit concrete continuously or in layers of such thickness that no concrete will be placed on concrete that has hardened sufficiently to cause the formation of seams or planes of weakness. If a section cannot be placed continuously, provide construction joints as herein specified. Deposit concrete to avoid segregation at its final location.

4. Placing Concrete in Forms. Deposit concrete in forms in horizontal layers not deeper than 24 inches and in a manner to avoid inclined construction joints. Where placement consists of several layers, place each layer while preceding layer is still plastic to avoid cold joints.

   Consolidate placed concrete by mechanical vibrating equipment supplemented by hand spading, rodding, or tamping. Use equipment and procedures for consolidation of concrete in accordance with ACI 309.

   Do not use vibrators to transport concrete inside forms. Insert and withdraw vibrators vertically at uniformly spaced locations not farther than visible effectiveness of machine. Place vibrators to rapidly penetrate placed layer and at least 6 inches into preceding layer. Do not insert vibrators into lower layers of concrete that have begun to set. At each insertion limit duration of vibration to time necessary to consolidate concrete and complete embedment of reinforcement and other embedded items without causing segregation of mix.

5. Placing Concrete Slabs. Deposit and consolidate concrete slabs in a continuous operation, within limits of construction joints, until the placing of a panel or section is completed.

   Consolidate concrete during placing operations so that concrete is thoroughly worked around reinforcement and other embedded items and into corners.

   Bring slab surfaces to correct level with straightedge and strike off. Use bull floats or darbies to smooth surface, free of humps or hollows. Do not disturb slab surfaces prior to beginning finishing operations.

   Maintain reinforcing in proper position during concrete placement.

6. Cold-Weather Placing. Comply with provisions of ACI 306 and as follows. Protect concrete work from physical damage or reduced strength that could be caused by frost, freezing actions, or low temperatures.

   a. When air temperature has fallen to or is expected to fall below 40 degrees F (4 degrees C), uniformly heat water and aggregates before mixing to obtain a concrete mixture temperature of not less than 50 degrees F (10 degrees C) and not more than 80 degrees F (27 degrees C) at point of placement.

   b. Do not use frozen materials or materials containing ice or snow. Do not place concrete on frozen subgrade or on subgrade containing frozen materials.

   c. Do not use calcium chloride, salt, and other materials containing antifreeze agents or chemical accelerators unless otherwise accepted in mix designs.

7. Hot-Weather Placing. When hot weather conditions exist that would seriously impair quality and strength of concrete, place concrete in compliance with ACI 305 and as herein specified.

   a. Cool ingredients before mixing to maintain concrete temperature at time of placement below 90 degrees F (32 degrees C). Mixing water may be chilled, or chopped ice may be used to control temperature provided water equivalent of ice is calculated to total amount of mixing water. Use of liquid nitrogen to cool concrete is Contractor’s option.

b. Cover reinforcing steel with water-soaked burlap if it becomes too hot, so that steel temperature will not exceed the ambient air temperature immediately before embedment in concrete.

c. Fog spray forms, reinforcing steel, and subgrade just before concrete is placed.

d. Use water-reducing retarding admixture when required by high temperatures, low humidity, or other adverse placing conditions, when acceptable to the Project Engineer.

H. FINISH OF FORMED SURFACES

1. Rough Form Finish. For formed concrete surfaces not exposed to view in the finish work or concealed by other construction. This is the concrete surface having texture imparted by form-facing material used, with tie holes and defective areas repaired and patched, and fins and other projections exceeding 1-4 inch in height rubbed down or chipped off.

2. Smooth Form Finish. For formed concrete surfaces exposed to view or to be covered with a coating material applied directly to concrete, or a covering material applied directly to concrete, such as waterproofing, damp proofing, veneer plaster, painting, or other similar system. This is an as-cast concrete surface obtained with selected form-facing material, arranged in an orderly and symmetrical manner with a minimum of seams. Repair and patch defective areas with fins and other projections completely removed and smoothed.

3. Grout-Cleaned Finish. Provide grout-cleaned finish to scheduled concrete surfaces that have received smooth form finish treatment.

   Combine one part Portland cement to 1-1/2 parts fine sand by volume and a 50:50 mixture of acrylic or styrene butadiene-based bonding admixture and water to consistency of thick paint. Blend standard Portland cement and white Portland cement, amounts determined by trial patches, so that final color dry grout will match adjacent surfaces.

   Thoroughly wet concrete surfaces, apply grout to coat surfaces, and fill small holes. Remove excess grout by scraping and rubbing with clean burlap. Keep damp by fog spray for at least 36 hours after rubbing.

4. Related Unformed Surfaces. At tops of walls, horizontal offsets, and similar unformed surfaces, occurring adjacent to formed surfaces, strike-off smooth and finish with a texture matching adjacent formed surfaces. Continue final surface treatment of formed surfaces uniformly across adjacent unformed surfaces unless otherwise indicated.

I. MONOLITHIC SLAB FINISHES

1. Float Finish. Apply float finish to monolithic slab surfaces to receive trowel finish and other finishes as hereinafter specified; slab surfaces to be covered with membrane or elastic waterproofing, membrane or elastic roofing, or sand-bed terrazzo; and as otherwise indicated.

   After screeding, consolidating, and leveling concrete slabs, do not work surface until ready for floating. Begin floating, using float blades or float shows only, when surface water has disappeared, when concrete has stiffened sufficiently to permit operation of power-driven floats, or both. Consolidate surface with power-driven floats or by hand floating if area is

small or inaccessible to power units. Check and level surface plane to tolerances of Ff 18 – Fl 15. Cut down high spots and fill low spots. Uniformly slope surfaces to drains. Immediately after leveling, refloat surface to a uniform, smooth, granular texture.

2. Trowel Finish. Apply trowel finish to monolithic slab surfaces to be exposed to view and slab surfaces to be covered with resilient flooring, carpet, ceramic or quarry tile, paint, or other thin film finish coating system.

   After floating, begin first trowel finish operation using a power-driven trowel. Begin final troweling when surface produces a ringing sound as trowel is moved over surface. Consolidate concrete surface by final hand-troweling operation, free of trowel marks, uniform in texture and appearance, and with surface leveled to tolerances of Ff 20- F1 17. Grind smooth surface defects that would telegraph through applied floor covering system.

3. Trowel and Fine Broom Finish. Where ceramic or quarry tile is to be installed with thin-set mortar, apply trowel finish as specified, then immediately follow with slightly scarifying surface by fine brooming.

4. Nonslip Broom Finish. Apply nonslip broom finish to exterior concrete platforms, steps, and ramps, and elsewhere as indicated.

   Immediately after float finishing, slightly roughen concrete surface by brooming with fiber-bristle broom perpendicular to main traffic route. Coordinate required final finish with the Project Engineer before application.

J. CONCRETE CURING AND PROTECTION

1. General. Protect freshly placed concrete from premature drying and excessive cold or hot temperatures. In hot, dry, and windy weather, protect concrete from rapid moisture loss before and during finishing operations with an evaporation-control material. Apply in accordance with manufacturer's instructions after screeding and bull floating, but before power floating and troweling. For the curing of colored concrete slabs, refer to Manufacturer's recommendations.

   Start initial curing as soon as free water has disappeared from concrete surface after placing and finishing. Weather permitting, keep continuously moist for not less than 7 days.

2. Curing Methods. Perform curing of concrete by curing and sealing compound, by moist curing, by moisture-retaining cover curing, and by combinations thereof, as herein specified. For colored concrete slabs, refer to Manufacturer's recommendations.

   a. Provide moisture curing by following methods.

   b. Keep concrete surface continuously wet by covering with water.

   c. Use continuous water-fog spray.

   Cover concrete surface with specified absorptive cover, thoroughly saturate cover with water, and keep continuously wet. Place absorptive cover to provide coverage of concrete surfaces and edges, with 4 inch lap over adjacent absorptive covers.

   Provide moisture-cover curing as follows:

Cover concrete surfaces with moisture-retaining cover for curing concrete, placed in widest practicable width with sides and ends lapped at least 3 inches and sealed by waterproof tape or adhesive. Immediately repair any holes or tears during curing period using cover material and waterproof tape.

Provide curing and sealing compound to exposed interior slabs and to exterior slabs, walks, and curbs as follows:

a. Apply specified curing and sealing compound to concrete slabs as soon as final finishing operations are complete (within 2 hours and after surface water sheen has disappeared). Apply uniformly in continuous operation by power spray or roller in accordance with manufacturer's directions. Recoat areas subjected to heavy rainfall within 3 hours after initial application. Maintain continuity of coating and repair damage during curing period.

b. Use membrane-curing compounds that will not affect surfaces to be covered with finish materials applied directly to concrete.

3. Curing Formed Surfaces. Cure formed concrete surfaces, including underside of beams, supported slabs, and other similar surfaces by moist curing with forms in place for full curing period or until forms are removed. If forms are removed, continue curing by methods specified above, as applicable.

4. Curing Unformed Surfaces. Cure formed surfaces, such as slabs, floor topping, and other flat surfaces, by application of appropriate curing method.

Final cure concrete surfaces to receive liquid floor hardener or finish flooring by use of moisture retaining cover, unless otherwise directed.

K. REMOVAL OF FORMS

1. General. Formwork not supporting weight of concrete, such as sides of beams, walls, columns, and similar parts of the work, may be removed after cumulatively curing at not less than 50 degrees F (10 degrees C) for 24 hours after placing concrete, provided concrete is sufficiently hard to not be damaged by form-removal operations, and provided curing and protection operations are maintained.

Formwork supporting weight of concrete, such as beam soffits, joists, slabs, and other structural elements, may not be removed in less than 14 days and until concrete has attained at least 75 percent of design minimum compressive strength at 28 days. Determine potential compressive strength of in-place concrete by testing field-cured specimens representative of concrete location or members.

Form-facing material may be removed 4 days after placement only if shores and other vertical supports have been arranged to permit removal of form-facing material without loosening or disturbing shores and supports.

L. REUSE OF FORMS

1. Clean and repair surfaces of forms to be reused in work. Split, frayed, delaminated, or otherwise damaged form-facing material will not be acceptable for exposed surfaces. Apply new form coating compound as specified for new formwork.

2. When forms are extended for successive concrete placement, thoroughly clean surfaces, remove fins and laitance, and tighten forms to close joints. Align and secure joint to avoid offsets. Do not use "patched" forms for exposed concrete surfaces except as acceptable to the Project Engineer.

M. MISCELLANEOUS CONCRETE ITEMS

1. Filling In. Fill in holes and openings left in concrete structures for passage of work by other trades, unless otherwise shown or directed, after work of other trades is in place. Mix, place, and cure concrete as herein specified, to blend with in-place construction. Provide other miscellaneous concrete filling shown or required to complete work.

2. Reinforced Masonry. Provide concrete grout for reinforced masonry lintels and bond beams where indicated on drawings and as scheduled. Maintain accurate location of reinforcing steel during concrete placement.

N. PATCHING DEFECTIVE AREAS

1. Patching Defective Areas. Repair and patch defective areas with cement mortar immediately after removal of forms, when acceptable to the Project Engineer.

   Cut out honeycomb, rock pockets, voids over ¼ inch in any dimensions, and holes left by tie rods and bolts, down to solid concrete but in no case to a depth of less than 1 inch. Make edges of cuts perpendicular to the concrete surface. Thoroughly clean, dampen with water, and brush-coat the area to be patched with specified bonding agent. Place patching mortar before bonding compound has dried.

   For exposed-to-view surfaces, blend white Portland cement and standard Portland cement so that, when dry, patching mortar will match color surrounding. Provide test areas at inconspicuous location to verify mixture and color match before proceeding with patching. Compact mortar in place and strike-off slightly higher than surrounding surface.

2. Repair of Formed Surfaces. Remove and replace concrete having defective surfaces if defects cannot be repaired to satisfaction of the Project Engineer. Surface defects, as such, include color and texture irregularities, cracks, spalls, air bubbles, honeycomb, rock pockets, fins and other projections on surface, and stains and other discolorations that cannot be removed by cleaning. Flush out form tie holes, fill with dry-pack mortar, or precast cement cone plugs secured in place with bonding agent.

   Repair concealed formed surfaces, where possible, that contain defects that affect the durability of concrete. If defects cannot be repaired, remove and replace concrete.

3. Repair of Unformed Surfaces. Test unformed surfaces, such as monolithic slabs, for smoothness and verify surface plane to tolerances specified for each surface and finish. Correct low and high areas as herein specified. Test unformed surfaces sloped to drain for trueness of slope and smoothness by using a template having required slope.

   Repair finished unformed surfaces that contain defects that affect durability of concrete. Surface defects, as such, include crazing and cracks in excess of 0.01 inch wide or that penetrate to reinforcement or completely through nonreinforced sections regardless of width, spalling, popouts, honeycomb, rock pockets, and other objectionable conditions.

Correct high areas in uniformed surfaces by grinding after concrete has cured at least 14 days.

Correct low areas in unformed surfaces during or immediately after completion of surface finishing operations by cutting out low areas and replacing with patching compound. Finished repaired areas to blend into adjacent concrete. Proprietary underlayment compounds may be used when acceptable to the Project Engineer.

Repair defective areas, except random cracks and single holes not exceeding 1 inch in diameter, by cutting out and replacing with fresh concrete. Remove defective areas to sound concrete with clean, square cuts, and expose reinforcing steel with at least ¾ inch clearance all around. Dampen concrete surfaces in contact with patching concrete and apply bonding compound. Mix patching concrete of same materials to provide concrete of same type or class as original concrete. Place, compact, and finish to blend with adjacent finished concrete. Cure in same manner as adjacent concrete.

Repair isolated random cracks and single holes not over 1 inch in diameter by dry-pack method. Groove top of cracks and cut out holes to sound concrete and clean dust, dirt and loose particles. Dampen cleaned concrete surfaces and apply bonding compound. Mix dry-pack, consisting of one part Portland cement to 2-1/2 parts fine aggregate passing a No. 16 mesh sieve, using only enough water as required for handling and placing. Place dry-pack before bonding compound has dried. Compact dry-pack mixture in place and finish to match adjacent concrete. Keep patched area continuously moist for not less than 72 hours.

Perform structural repairs with prior approval of the Project Engineer for method and procedure, using specified epoxy adhesive and mortar.

Repair methods not specified above may be used, subject to acceptance of Engineer.

O. QUALITY CONTROL TESTING DURING CONSTRUCTION

1. General. The owner will employ a testing laboratory to perform tests and to submit test reports. The Contractor shall coordinate and provide advanced notice to the City of El Paso Construction Division/City Inspector and the designated project testing laboratory.

   Sampling and testing for quality control during placement of concrete may include the following, as directed by the Project Engineer and/or Materials Engineer.

   a. Sampling Fresh Concrete. ASTM C 172, except modified for slump to comply with ASTM C 94.

   b. Slump. ASTM C 143; one test at point of discharge for each day's pour of each type of concrete; one test per 30 cubic yards of each type of concrete placed each day including when the concrete cylinders are molded; additional tests when concrete consistency seems to have changed.

   c. Air Content. ASTM C 173, volumetric method for lightweight or normal weight concrete; ASTM C 231 pressure method for normal weight concrete; one test per 30 cubic yards of each type of concrete placed each day including when the concrete cylinders are molded.

d. Concrete Temperature. Test hourly when air temperature is 40 degrees F (4 degrees C) and below, when 80 degrees F (27 degrees C) and above, one test per 30 cubic yards of each type of concrete placed each day including when the concrete cylinders are molded, and each time a set of compression test specimens is made.

e. Compressive Strength Tests. ASTM C 39; one set of 4 cylinders or specimens for each type of concrete per 100 cubic yards or fraction thereof placed in a day; two specimens tested at 7 days, two specimens tested at 28 days, and one specimen retained in reverse for later testing if required.

f. Reinforcing steel shall be checked for size and placement prior to concrete placement.

When frequency of testing will provide fewer than 5 strength test for a given class of concrete, conduct testing from at least 5 randomly selected batches or from each batch if fewer than 5 are used.

When total quantity of a given class of concrete is less than 50 cubic yards, Engineer may waive strength test if adequate evidence of satisfactory strength is provided.

When strength of field-cured cylinders is less than 85 percent of companion laboratory-cured cylinders, evaluate current operations and provide corrective procedures for protecting and curing the in-place concrete.

Strength level of concrete will be considered satisfactory if averages of sets of three consecutive strength test results equal or exceed specified compressive strength, and no individual strength test result falls below specified compressive strength by more than 500 psi.

Test results will be reported in writing to Engineer, Structural Engineer, Ready-Mix Producer, and Contractor within 24 hours after tests. Reports of compressive strength tests shall contain the project identification name and number, date of concrete placement, name of concrete testing service, concrete type and class, location of concrete batch in structure, design compressive strength at 28 days, concrete mix proportions and materials, compressive breaking strength, and type of break for both 7 day tests and 28 days tests.

2. Nondestructive Testing. Impact hammer, sonoscope or other nondestructive device may be permitted but shall not be used as the sole basis for acceptance or rejection.

3. Additional Tests. The testing service will make additional tests of in-place concrete when test results indicate specified concrete strengths and other characteristics have not been attained in the structure, as directed by Engineer. Testing service may conduct tests to determine adequacy of concrete by cored cylinders complying with ASTM C 42, or by other methods as directed. Contractor shall pay for such tests when unacceptable concrete is verified.

END OF SECTION 321313

SECTION 323113 – TEMPORARY CHAIN LINK FENCES AND GATES

PART I GENERAL

A. SUMMARY

1. Section includes: Erection, maintenance, and dismantling of temporary fencing around construction site and materials storage areas. This section does not apply where security fencing is required.

2. This Section includes the following:

a. Temporary Chain-Link Fences

b. Gates: Swinging.

B. SUBMITTALS

1. Product Data: For each type of product indicated.

2. Shop Drawings: Show locations, components, materials, dimensions, sizes, weights, and finishes of components. Include plans, gate elevations, sections, details of post anchorage, attachment, bracing, and other required installation and operational clearances. Shop drawings shall also include layout of temporary fencing, existing pavement and roads, access to fire hydrants and hose connections, and other site specific conditions.

PART II PRODUCTS

A. New materials as specified herein or previously used salvaged chain link fencing and associated appurtenances in good condition meeting the requirements as per this specification.

B. CHAIN-LINK FENCE FABRIC: General: 6’ height excluding extension arm without 3-strand Barbed Wire. Comply with ASTM A392, CLFMI CLF 2445, and requirements indicated below:

1. Steel Wire Fabric: Metallic-coated wire with a diameter of 0.148 inch (9 Gauge).

a. Mesh Size: 2 inches.

b. Metallic (Zinc) Coating: ASTM A 392, Type II.

2. Selvage: Knuckled at both selvages.

C. INDUSTRIAL FENCE FRAMING:

1. Posts and Rails: Comply with ASTM F 1043 for framing, ASTM F 1083 for Group IC round pipe, and the following:

a. Group: IA, round steel pipe, Schedule 40.

b. Fence Height: 6’ height excluding extension arm without Barbed Wire.

c. Strength Requirement: Heavy industrial according to ASTM F 1043.

d. Coating for Steel Framing: Zink coating.

e. Posts shall be suitable for driving into ground or anchoring with base plates or inserting in pre-cast concrete blocks.

D. TENSION WIRE

1. General: Provide horizontal tension wire at bottom of fence fabric.

2. Metallic-Coated Steel Wire: 0.177-inch- diameter, marcelled tension wire complying with ASTM A817 and ASTM A824.

a. Metallic Coating: Type III, Zn-5-Al-MM alloy.

E. INDUSTRIAL SWING GATES

1. General: Comply with ASTM F 900 for single swing gate types.

a. Metal Pipe and Tubing: Galvanized steel. Comply with ASTM F 1083 and ASTM F 1043 for materials and protective coatings.

2. Frames and Bracing: Fabricate members from round, galvanized steel tubing with outside dimension and weight according to ASTM F 900 and the Project Documents. The gate fabric height shall be 2” less than adjacent fence height.

3. Frame Corner Construction:

a. Assembled with corner fittings and 3/8 inch diameter, adjustable truss rods for panels 5 feet wide or wider.

4. Hardware: Latches permitting operation from both sides of gate and hinges. Fabricate latches with integral eye openings for padlocking; padlock to be furnished by the Owner.

F. FITTINGS

1. General: Comply with ASTM F 626.

2. Finish: Metallic Coating for Pressed Steel or Cast Iron: Not less than 1.2 oz. /sq. ft. zinc.

G. CAST-IN-PLACE CONCRETE: Where concrete is used for anchoring posts in unstable or soft soil conditions, the following shall apply:

1. Materials: Portland cement complying with ASTM C 150, Type I aggregates complying with ASTM C 33, and potable water.

2. Concrete Mixes: Normal-weight concrete with not less than 3,000-psi compressive strength (28 days), 3-inch slump, and 1-inch maximum size aggregate.

III. EXECUTION

A. LAYOUT

1. Installation of temporary fencing shall not deter or hinder access to existing and new hose connections and fire hydrants.

   a. Maintain 3 feet diameter clear space around fire hydrants.

   b. Where fire hydrant or hose connection is blocked by fencing, provide access gate.

2. Access: Provide gates for personnel, delivery of materials, and access by emergency vehicles.

B. INSTALLATION

1. General: Install chain-link fencing to comply with ASTM F 567 and more stringent requirements specified.

2. Post Excavation: Drill or hand-excavate holes for posts to diameters and spacings as indicated, in firm, undisturbed soil.

3. Post Setting: Drive posts, set in holes and backfill, or anchor in pre-cast concrete blocks.

4. Posts over pavement: Use steel post plates or pre-cast concrete block.

5. Concrete Footing (Soft and/or Unstable Ground): Place 3,000 psi concrete plug around posts to 12” diameter by 30” depth and vibrate or tamp for consolidation.

6. Terminal Posts: Locate terminal end, corner, and gate posts per ASTM F 567 and terminal pull posts at changes in horizontal or vertical alignment.

7. Post Bracing and Intermediate Rails: Install according to ASTM F 567. Install braces at end and gate posts and at both sides of corner and pull posts.

8. Tension Wire: Install according to ASTM F 567, maintaining plumb position and alignment of fencing.

9. Top Rail: Install according to ASTM F 567.

10. Bottom Rails: Install, spanning between posts.

11. Chain-Link Fabric: Apply fabric to outside of enclosing framework. Leave 1 inch between finished grade or surface and bottom selvage, unless otherwise indicated.

12. Tie Wires: Attach wire per ASTM F 626. Bend ends of wire to minimize hazard to individuals and clothing.

13. Fasteners: Install nuts for tension bands and carriage bolts on the side of the fence opposite the fabric side.

C. GATE INSTALLATION

1. Install gates according to manufacturer's written instructions, level, plumb, and secure for full opening without interference. Attach fabric as for fencing. Attach hardware using tamper-resistant or concealed means. Install ground-set items in concrete for anchorage. Adjust hardware for smooth operation and lubricate where necessary.

D. MAINTENACE AND REMOVAL

1. Maintain fencing in good condition. If damaged, immediately repair.

2. Remove temporary fencing upon completion of Work or when no longer required for security or control. Backfill and compact holes. Holes in pavement shall be patched and resurfaced to match existing pavement in accordance with the project specifications. Repair damage caused by installation of temporary fencing.

END OF SECTION 323113

SECTION 330501 - POLYVINYL CHLORIDE (PVC) PRESSURE PIPE FOR WATER MAINS

A. SCOPE

These specifications cover the requirements for polyvinyl chloride (PVC) pressure plastic pipe materials and installation for potable water use. These specifications shall apply to PVC pipe in sizes 4-inch through 16-inch diameters.

B. QUALITY ASSURANCE

All PVC pipe shall be coded to provide positive identification and prevent accidental damage to or interruption of the water facilities. Pipe shall conform to American National Standards Institute/National Sanitation Foundation (ANSI/NSF) Standard 61 “Drinking Water System Components - Health Effects” and be certified by and organization accredited by ANSI. Such compliance shall be evidenced by an affidavit from the manufacturer or vendor. If the pipe does not presently conform to this standard, information from the manufacturer regarding action being taken to comply with this standard must be submitted.

Only pipe manufactured in the United States of America will be accepted.

Pipe shall be suitable for use in the conveyance of water for human consumption. Each piece of pipe shall be marked with two seals of the testing agency that certified the pipe material as being suitable for potable water use.

C. SUBMITTALS

The contractor shall be responsible for furnishing all necessary shop drawings, certificates, etc. for review and acceptance to the Engineer. A certification from the manufacturer shall be furnished to the Engineer attesting compliance with appropriate ASTM Standards and ANSI/NSF Standard 61. Such compliance shall be evidenced by an affidavit from the manufacturer or vendor. If the pipe does not presently conform to this standard, information from the manufacturer regarding action being taken to comply with this standard must be submitted. Failure to provide this information may result in rejection of pipeline material.

Submit documentation on pipe products, fittings, and related materials as may be required by the Contract Documents or the Engineer. Review all submittals prior to submission. Submit it in a timely manner so as not to delay the project. Allow sufficient time for Engineer's review and resubmission, if necessary. Include certifications from manufacturer that the product complies with appropriate ASTM standards.

D. STANDARDS

PVC Pressure Pipe shall comply with the applicable requirements of the following:

ANSI/NSF 61	Drinking Water System Components - Health Effects
ASTM F-477	Specifications for Elastomeric Seals (Gaskets) for Joining Plastic Pipe
ASTM D-1784	Specifications for Rigid Polyvinyl Chloride (PVC) Compounds and Chlorinated Polyvinyl Chloride (CPVC) Compounds
ASTM D-2241	Specification for Poly (Vinyl Chloride) (PVC) Pressure-Rated Pipe (SDR Series)

ASTM D-2774	Recommended Practice for Underground Installation of Thermoplastic Pressure Piping
ASTM D-2837	Standard Test Method for Obtaining Hydrostatic Design Basis for Thermoplastic Pipe Materials
ASTM D-3139	Standard Specification for Joints for Plastic Pressure Pipes Using Flexible Elastomeric Seals
AWWA C-900	Standard for Polyvinyl Chloride (PVC) Pressure Pipe, 4-Inch through 12-Inch, for Water Distribution
AWWA C-905	Standard for Polyvinyl Chloride (PVC) Water Transmission Pipe, Nominal Diameters 14-Inch through 36-Inch
AWWA M-23	Manual: PVC Pipe - Design and Installation
UNI-BELL-3	Polyvinyl Chloride (PVC) Pressure Pipe (Complying with AWWA Standard C-900)
UNI-BELL-11	Polyvinyl Chloride (PVC) Water Transmission Pipe Nominal Diameters 14-36 Inch

E. DELIVERY AND STORAGE

Pipe, fittings and accessories shall be inspected upon delivery and during progress of the work. Any material found defective will be rejected by the Engineer, and shall be promptly removed from the site.

All pipe, fittings, and other accessories shall, unless otherwise directed, be unloaded at point of delivery, hauled to and distributed at the site of the work by the Contractor. In loading and unloading, materials shall be lifted by hoists or rolled on skidways so as to avoid shock or damage. Under no circumstances shall materials which have been dropped be incorporated in the work. Pipe handled on skidways shall not be skidded or rolled against pipe already on the ground.

PVC pipe shall not be stored outside exposed to prolonged periods of sunlight. Any discoloration of pipe due to such exposure is an indication of reduced pipe impact strength, and will be sufficient cause for rejection of the pipe. Any pipe rejected shall be removed from the job site.

F. PIPE MATERIALS: Pipe shall meet the requirements of AWWA C-900 for 4-inch through 12-inch sizes, and AWWA C-905 for 14-inch through 36-inch pipe. Pipe shall be Underwriters Laboratories (UL) approved. All PVC pressure pipe shall be furnished in cast iron pipe equivalent outside diameters and a standard laying length of 20 feet. Minimum pressure class shall be 235 (DR 18) for 4-inch through 12-inch diameters, and 200 psi (DR 21) for 14-inch through 16-inch pipe.

Pipe and coupling for a restrained joint pipe system shall be from un-plasticized PVC compounds having a minimum cell classification of 12454, as defined in ASTM D 1784. The compound shall qualify for a Hydrostatic Design Basis (HDB) of 4000 psi for water at 73.4° F, in accordance with the requirements of ASTM D 2837.

G. JOINTS

Pipe joints shall be push-on, flexible elastomeric gasketed or cartridge-style restrained joint. The pipe length of a push-on joint shall contain on bell-end. The bell shall be an integral part of the pipe length and have the same strength and DR as the pipe. The spigot pipe end shall be beveled and include a synthetic elastomeric gasket. The gasket shall meet the requirements of ASTM F-477.

All push-on joint PVC pipe shall be marked with dual indicator lines at the spigot end indicating proper penetration when the joint is assembled. The sockets and/or spigot configurations for the fittings and couplings shall be compatible to the pipe. Socket configuration shall prevent improper installation of gasket and shall ensure that the gasket remains in place during joining operations.

Cartridge-style restrained joint PVC pipe shall be joined using a non-metallic coupling to form an integral system. Coupling shall be designed for use at or above the pressure class of the pipe with which they are utilized and shall incorporate twin elastomeric sealing gaskets meeting ASTM F-477. High strength, flexible thermoplastic splines shall be inserted mating, machined grooves in the pipe and coupling to provide full 360° restraint.

Restrained joint pipe systems shall have a restrained joint that in and of itself prevents over belling of the pipe during assembly of the joint and every joint already assembled in that string of pipe. Restrained joint system shall allow the installer to both push and pull the pipe during installation without the risk of over belling of any of the pipe joints in the string. Joint shall not require electrical power or other additional equipment (other than hand tools) to assemble.

H. FITTINGS

Pipe fittings shall be ductile iron, cement lined, in accordance with AWWA C-110 and SECTION 5.0 of these Specifications, Valves and Fittings. Pipe fittings shall be mechanical joint (MJ) unless otherwise specified.

I. PROVISIONS FOR THRUST: For 12-inch diameter water mains and smaller, concrete thrust blocks or other approved thrust restraint method shall be installed at all fittings and valves per design plans and in accordance with SECTION 3.1 of these Specifications. If approved, thrust restraint devices may be installed in lieu of thrust blocks as per manufacturer's specifications.

For 16-inch diameter water mains and larger, thrust restraint devices must be installed at all fittings and valves per manufacturer's specifications and as shown on design plans. Concrete thrust blocks are not allowed unless approved by the Utility.

Acceptable thrust restraint devices include EBAA Iron, Ford Uni-Flange, or approved equal.

NOTE: At connection of new water line to existing main, both concrete thrust blocking (per SECTION 3.1 of these Specifications) and thrust restraint devices must be used, regardless of main size.

Thrust restraint devices shall be used for a sufficient distance from each bend, tee, plug, or other fitting to resist thrust which will be developed at the design pressure of the pipe. For the purposes of thrust restraint, design pressure shall be 1.5 times the design working pressure class indicated. Length of pipe with restrained joints to resist thrust forces shall be determined by pipe manufacturer.

J. PIPE TRENCHING, INSTALLATION, AND BACKFILL

Except as noted, Pipe Trenching, Installation and Backfill for PVC Pressure Pipe shall be in accordance with AWWA M-23, C-900, C-905 and SECTION 4.0 of this specifications.

Trench Width: The minimum clear width of the trench should be 1 foot greater than the outside diameter of the pipe. The maximum clear width of the trench at a point 1 foot above the top of the pipe is equal to the pipe outside diameter plus 2 feet. If the maximum recommended trench width is exceeded or if the pipe is installed in a compacted embankment, then pipe embedment shall be compacted to a minimum point of 2-1/2 pipe diameters from the side of the pipe or to the trench walls.

Pipe Zone Embedment: Unless otherwise specified, PVC pressure pipe shall be embedded in Class II material as defined in SECTION 4.1. Native material or imported material meeting or exceeding Class II requirements may be used.

Installation: Plastic pressure pipe shall be installed in accordance with AWWA M 23 and C-900 and/or manufacturer's printed recommendations, whichever is applicable. Where a conflict arises with this specification, this specification shall control.

For push-on joints care shall be taken to insert the pipe spigot to the reference mark to prevent buckling or separation of the pipe joint. The reference mark shall be showing and not be further than 1/2-inch from the leading edge of the pipe bell. The contractor shall verify that the manufacturer's reference mark is correct per manufacturer's literature.

Pipe and couplings for a restrained joint pipe system shall be homogenous throughout and free from voids, cracks, inclusions and other defects, and shall be as uniform as commercially practicable in color, density, and other physical characteristics. Assembly shall not require that the pipe be allowed to rest after a joint is assembled prior to it being pulled in or connections being made. Pipe and restrained joint system shall enable the installer to pull the pipe while joint assembly takes place.

Under no circumstances should the pipe or accessories be dropped into the trench. When pipe laying is not in progress, open ends of installed pipe should be closed to prevent entrance of trench water, dirt and foreign matter into the line.

Marking Tape: PVC pressure water pipe shall be marked by concurrently installing the appropriate marking tape for detection purposes. The detectable tape shall consist of a 5.0 mil inert polyethylene plastic material. It shall be high visibility blue with the standard warning and identification for potable water imprinted on the tape. The minimum width of detectable tape shall be 6-inches for all potable water lines. The burial depth shall be 36-inches, measured from finished grade. Detecting tape shall be manufactured by Empire, Lineguard, or approved equal.

Deflection: Maximum ring deflection of installed PVC pressure pipe shall be 5 percent. Joint deflection shall not exceed manufacturer's recommendations for the particular size pipe.

Corrosion Protection: As a precaution against corrosion, all flanges, bolts, nuts and other exposed metal surfaces underground shall be coated with Texaco, Koppers, or approved equal rustproof compound.

K. TESTING: Disinfect and test the piping system as detailed in AWWA C-651 and in accordance with the SECTION 6.6 of these Specifications.

END OF SECTION 330501

SECTION 330502 - POLYVINYL CHLORIDE (PVC) FLEXIBLE PIPE FOR GRAVITY SEWER PIPE

A. SCOPE

These standard specifications designate the requirements for the furnishing and installation of PVC (polyvinyl chloride) gravity pipe for sanitary sewage, with a standard dimension ratio (SDR) as shown in the drawings and/or specified herein. The Contractor shall furnish all materials, equipment, tools, labor, superintendence, and incidentals required for the complete construction of the work designated.

B. QUALITY ASSURANCE

All PVC pipe shall be coded to provide positive identification and prevent accidental damage to or interruption of the sanitary sewer facilities.

Only pipe manufactured in the United States of America will be accepted. All pipe, fittings, and accessories shall be new. Manufacturer's physical and chemical tests shall be performed according to the ASTM standard applicable to the respective PVC pipe type and diameter herein specified, in order to demonstrate pipe quality.

C. SUBMITTALS

Submit documentation on pipe products, fittings, and related materials as may be required by the Contract Documents or the Utility Engineer. Review all submittals prior to submission. Submit in a timely manner so as not to delay the project. Allow sufficient time for Engineer's review and resubmission, if necessary. Include certifications from manufacturer that the product complies with appropriate ASTM standards.

D. STANDARDS

PVC pipe shall comply with applicable requirements of the following:

ASTM D-1784 Specification for Rigid Poly (Vinyl Chloride) (PVC) Compounds and Chlorinated Poly (Vinyl Chloride) (CPVC) Compounds
ASTM D-2321 Specification for Underground Installation of Flexible Thermoplastic Sewer Pipe
ASTM D-3034 Specification for Type PSM Poly (Vinyl Chloride) (PVC) Large Diameter Plastic Gravity Sewer Pipe and Fittings
ASTM D-3212 Joints for Drain and Sewer Pipes Using Flexible Elastomeric Seals
ASTM F-477 Specification for Elastomeric Seals (Gaskets) for Joining Plastic Pipe
ASTM F-679 Specification for Poly (Vinyl Chloride) (PVC) Large Diameter Plastic Gravity Sewer Pipe and Fittings
ASTM F-789 Specification for Type PS-46 Poly (Vinyl Chloride) (PVC) Plastic Gravity Flow Sewer Pipe and Fittings
ASTM F-794 Specification for Poly (Vinyl Chloride) (PVC) Large Diameter Ribbed Gravity Sewer Pipe and Fittings Based on Controlled Inside Diameter

E. DELIVERY AND STORAGE

Pipe, fittings and accessories shall be inspected upon delivery and during progress of the work. Any material found defective will be rejected by the Engineer, and shall be promptly removed from site.

Contractor shall be responsible for all material furnished by him and shall replace, at his own expense, any material found to be defective in manufacture or damaged.

All pipe, fittings, and other accessories shall, unless otherwise directed, be unloaded at point of delivery, hauled to and distributed at the site of the work by the Contractor. In loading and unloading, materials shall be lifted by hoists or rolled on skidways so as to avoid shock or damage. Under no circumstances shall materials which have been dropped be incorporated in the work. Pipe handled on skidways shall not be skidded or rolled against pipe already on the ground.

PVC pipe shall not be stored outside exposed to prolonged periods of sunlight. Discoloration of pipe due to such exposure is an indication of reduced pipe strength and may be sufficient cause for rejection of the pipe. Any pipe rejected shall be removed from the job site.

F. PIPE SCHEDULE

Polyvinyl Chloride (PVC) pipe shall be designated as gravity sewer conduit and shall meet the requirements as set forth in the following schedule in the various diameters and types shown:

Pipe Size	ASTM Standard	Material	Wall Type	Minimum Stiffness	Standard Length
8” 12” 15”	D-3034	PVC	SOLID SDR-35	46 psi	20’
	F-789	PVC	SOLID T1-WALL	46 psi	20’
18”	F-679	PVC	SOLID T1-WALL	46 psi	20’
	F-789	PVC	SOLID T1-WALL	46 psi	20’
	F-794	LARGE DIA. PVC	PROFILE OPEN	46 psi	13’
21”-27”	F-679	PVC	SOLID T1-WALL	46 psi	20’
	F-794	LARGE DIA PVC	PROFILE OPEN OR CLOSED	46 psi	13’
30”-36”	F-794	LARGE DIA PVC	PROFILE OPEN OR CLOSED	46 psi	13’
39”-60”	F-794	LARGE DIA PVC	PROFILE CLOSED	46 psi	13’

Pipe shall be furnished in the standard lengths shown although not more than 15 percent may be in random lengths.

G. JOINTS

Joints shall be push-on, bell and spigot type, with elastomeric seals and conform to the requirements of ASTM D-3212. Gaskets shall be factory installed and chemically bonded to the bell end of the pipe. Gasket material shall conform to the requirements of ASTM F-477.

H. PIPE MATERIALS

Pipe and fittings shall be made from polyvinyl chloride compounds which comply with the requirements for minimum cell classification defined by ASTM D-1784. Fittings, service risers, and laterals shall be PVC with a SDR 35 rating.

I. PIPE TRENCHING, INSTALLATION AND BACKFILL

Except as noted, Pipe Trenching, Installation and Backfill of PVC gravity sewer pipe shall be in accordance with ASTM D-2321 and SECTION 4.0 of these Specifications.

Trench Width: Trench width shall be as specified for FLEXIBLE PIPE in SECTION 4.2 of these Specifications.

Pipe Installation: Following the preparation of the trench bottom and trench bracing installed where required, pipe laying shall generally proceed upgrade with spigot ends pointing downgrade. Pipe shall be laid true to lines and grades as indicated on the drawings. Grade may be established by laser beam, or batter boards (not exceeding 50 foot intervals), and string line may be used with each pipe set to grade, from the string line, with a grade rod equipped with a "shoe" designed to fit into the flow line of the pipe.

J. TESTING

PVC shall be inspected, tested for leakage and deflection in accordance with SECTION 7.3 of these Specifications.

END OF SECTION 330502

SECTION 331013 - DISINFECTION AND TESTING

A. SCOPE: After completion of all pipe line section, the following procedure will be used to clean, sterilize and pressure test the pipeline. The pipeline shall be filled and flushed until all evidence of dirt or debris has been washed from the pipeline. The line shall then be refilled if necessary, introducing the chlorinating material. Each valved section shall then be brought up to test pressure and the leakage test performed. After all sections have been accepted, all valves shall be cleaned and the line left full of sterilizing water.

B. QUALITY ASSURANCE: The Contractor shall take special care to keep the interior of the pipe clean during storing, handling, and laying operations in order to reduce the need for flushing to an absolute minimum. In addition, all open ends shall be tightly covered whenever unattended to prevent small animals and dirt from entering the pipeline after it is in place.

C. STANDARDS: Disinfecting and Testing of Water Mains shall comply with applicable requirements of the following:

AWWA B-300	Standard for Hypochlorites
AWWA B-301	Standard for Liquid Chlorine
AWWA C-651	Standard for Disinfecting Water Mains

D. MATERIALS: Water required for filling, flushing and testing the line will be furnished at the Contractor's expense, at such points along the pipe line as water is available from the existing distribution or supply systems. Wasting of water will not be condoned and such actions may require the Owner to make appropriate charges for such water.

The Contractor shall make provisions to provide the water, by tank truck or other means, to the points necessary to produce specified test pressure.

Chlorinating Material: Shall be either liquid chlorine conforming to AWWA B-301 or hypochlorite conforming to AWWA B-300.

E. STERILIZATION: Before acceptance for operation, each unit of completed water system shall be sterilized as specified below or as prescribed by AWWA Standard C-651. As per C-651, two consecutive sets of acceptable samples, taken at least 24-hours apart, shall be collected from the new main. The unit to be sterilized shall be thoroughly flushed with water until all entrained dirt and mud have been removed before introducing the chlorinating material. The Contractor shall provide all chlorination material for sterilization at his cost. The chlorinating material shall provide a dosage of not less than 50 parts per million and shall be introduce into the water line in an approved manner. The treated water shall be retained in the pipe long enough to destroy all nonspore-forming bacteria. Except where a shorter period is approved, the retention time shall be at least 25 hours and shall produce not less than 10 p.p.m. of chlorine at the extreme end of the line at the end of the retention period. All valves on the lines being sterilized shall be opened and closed several times during the contact period.

F. HYDROSTATIC PRESSURE AND LEAKAGE TESTING: The pipe system shall be subjected to a hydrostatic pressure and leakage test and all valves and hydrants shall be

checked for proper operation and pressure. After completion of each valved section and following the filling and disinfection of the section, the system shall be subjected to this test. The meter, pressure gauges, pump, small piping, hose connections and all labor necessary for conducting the test, shall be furnished by the Contractor.

After the section of pipeline has been filled, water shall be pumped into the section and the pressure raised to 150 pounds per square inch. This test pressure shall be maintained for a period of at least two (2) hours. The water required to maintain this pressure shall be delivered into the pipe through the meter. The amount of water through the meter during the two-hour test period will be the total leakage. Should this leakage exceed the allowable amount, as specified herein,the Contractor shall make such repairs as may be required until the actual leakage, as determined by succeeding tests, is no greater than the allowable as determined by the following formula:

$$L = S \bullet D \bullet \frac{\sqrt{P}}{133{,}200}$$

except that L = 0 in above ground systems and

otherwise L = Allowable Leakage in gallons/hour
S = Length of pipe tested in feet
D = Nominal diameter of pipe in inches.
P = Average test pressure during the test, in pounds per square inch, gage; determined by computing the weighted average of actual pressures on various portions of the section.

After all sections of the pipeline have been tested, as described above, all valves shall be closed and the line left filled with the water to be used for disinfection and testing.

END OF SECTION 331013

SECTION 331216 - VALVES AND FITTINGS

1.1 SCOPE

The Contractor shall furnish all valves where indicated on the Plans, as called for in these Specifications, or as required for proper operation of the equipment in general. Unless otherwise indicated on the Plans or specified in other sections of these Specifications, valves shall conform to the requirements as specified herein.

Where proper operation and utilization of equipment and facilities require installation of valves not indicated or specified, the Contractor shall provide and install, upon acceptance by the Engineer, valves similar and comparable to valves specified for similar and comparable duty in other parts of the project.

1.2 QUALITY ASSURANCE

Valves and fittings shall conform to the latest revision of the National Sanitation Foundation/American National Standards Institute (NSF/ANSI) Standard 61, Annex F "Drinking Water System Components - Health Effects" and be certified by an organization accredited by ANSI. Such compliance shall be evidenced by an affidavit from the manufacturer or vendor. If the pipe does not presently conform to this standard, information from the manufacturer regarding action being taken to comply with this standard must be submitted.

All valves and fittings shall have the manufacturer's name or trademark permanently stamped or cast on it and "No Lead" brass alloy, e.g. "NL" shall be cast or stamped on the valves and fittings.

All valves installed in a given line shall be designed to withstand the test pressure for that particular line and shall be fabricated with ends to fit the piping.

1.3 SUBMITTALS

Complete shop drawings and specifications shall be furnished prior to acceptance and approval of the bid proposal. If requested, the valve manufacturer shall also submit a list of similar installations which have been in satisfactory operation for at least three years.

The manufacturer shall furnish a complete set of installation, operation, and maintenance instructions for each type of valve furnished. Instructions shall be bound in a cover.

1.4 VALVES

A. NON-RISING STEM DOUBLE DISC GATE VALVES: Non-Rising Stem Gate Valves are to be iron-body, bronze mounted, parallel seat internal wedging type with non-rising stem and designed for a working pressure of 200 psig. NRS gate valves shall comply with AWWA C-500 "Gate Valves for Water and Sewage Systems", latest revision.

Valves 12-inches or smaller shall be for horizontal installation. The number of turns to open shall be a minimum of three times the valve diameter.

Acceptable manufacturers and models shall be:

American-Darling Joint Ends) Clow Ends)	52NRS (Flanged Ends), 55NRS (Mechanical F5065 (Mechanical Joint Ends), F5070 (Flanged
Kennedy	561X (Flanged Ends), 571X (Mechanical Joint Ends)
M&H	Style 67NRS
Mueller Ends)	A-2380-6 (Flanged), A-2380-20 (Mechanical Joint

Submittals: Submittals shall be provided in accordance with Article 5.3 of this Section. Also, the manufacturer shall provide an Affidavit of Compliance in accordance with Section 1.4, AWWA Standard C-500. Records of all tests performed in accordance with Section 2.2 and Section 5.1, AWWA Standard C-500 shall be provided. These records will be representative test results for Section 2.2 and certificate of testing for Section 5.1. An affidavit of testing for the valve assembly as outlined in Section 3.1, AWWA Standard C-500 (300 ft-lbs) shall also be provided.

Markings: Shall be cast on the bonnet or body of each valve. Markings shall include the manufacturer's name or mark, the year the valve casting was made, the size of the valves, and the designated working pressure.

Valve Ends: Valve ends shall be mechanical joint or flanged with drilling in compliance with ANSI B16.1. Valve ends and size as specified.

Valve Body and Bonnet: Shall be cast iron conforming to ASTM A-126 Class B, or ductile iron conforming to ASTM A-395 or ASTM A-536.

Gate: Shall be cast iron or Grade A bronze. Gate rings, constructed of Grade A bronze, shall be rolled, peened, or pressed into grooves machined in the discs, or may be fastened by some other accepted method.

Body-Seat Ring: Shall be constructed of Grade A bronze, and shall be back-faced threaded and machined screwed into the valve body.

Wedges: Double-disc gate valves shall be equipped with a free and positive-operating internal device which will press the disc seats firmly against the body seats when the valve is closed and release the load before the discs begin to move when the valve is opened. Wedges shall be simple and rugged in design. The wedge material shall be as specified in AWWA C-500 and contact surface shall not be iron to iron.

Valve Stem: Shall be constructed of low zinc bronze CDA Copper Alloy No. C99500 with a minimum yield strength of 40,000 psi and minimum elongation in 2-inches of 10%.

Stem Seals: Shall consist of two O-rings such that the seal above the stem collar can be replaced with the valve under pressure in the fully open position. O-rings shall meet the requirements of ASTM D-2000 and have physical properties suitable for the application.

Valve Operator: Shall be a cast iron, ASTM A-126 Class B, wrench nut. The nut shall have a 2- inch square base and shall be 1-15/16-inches square at the top and be 1-3/4-inch high and shall open counterclockwise (left). The wrench nut shall be painted black and an arrow indicating direction of opening shall be cast on the nut, according to AWWA C-509.

Protective Coating: An epoxy coating shall be applied to all exterior and all stationary interior ferrous surfaces including all interior openings in the valves body. The coating shall not be applied to the gasket surfaces of the end flanges.

The coating shall be applied in accordance with AWWA C-550 and the manufacturer's instructions. After the coating is completely cured, the coated surface shall be tested for porosity, holidays, and pinholes using a holiday detector. All holidays or irregularities shall be repaired and the coating again tested.

B. OUTSIDE SCREW AND YOKE (OS&Y) GATE VALVES: Outside Screw and Yoke Gate Valves are to be iron-body, bronze mounted, parallel seat internal wedging type with outside screw and yoke and shall comply with AWWA C-500 "Gate Valves for Water and Sewage Systems". OS&Y Gate Valves shall be provided for the size specified.
Acceptable manufacturers and models shall be:

American Darling	52 OS&Y
Clow	F5072
Kennedy	566
M&H	STYLE 68
Mueller	A-2483-6

Submittals: Submittals shall be provided in accordance with Article 5.3 of this Section. Also, the manufacturer shall provide an Affidavit of Compliance in accordance with Section 1.4, AWWA Standard C-500. Records of all tests performed in accordance with Section 2.2 and Section 5.1, AWWA Standard C-500 shall be provided. These records will be representative test results for Section 2.2 and certificate of testing for Section 5.1. An affidavit of testing for the valve assembly as outlined in Section 3.1, AWWA Standard C-500 (300 ft-lbs) shall also be provided.

Markings: Shall be cast on the bonnet or body of each valve. Markings shall include the manufacture's name or mark, the year the valve casting was made, the size of the valves, and the designated working pressure.

Valve Ends: Valves ends shall be flanged, with drilling in compliance with ANSI B16.1, or as otherwise specified.

Valve Body and Bonnet: Shall be cast iron conforming to ASTM A-126 Class B, or ductile iron conforming to ASTM A-395 or ASTM A-536.

Gate: Shall be cast iron or Grade A bronze. Gate rings, constructed of Grade A bronze, shall be rolled, peened, or pressed into grooves machined in the discs, or may be fastened by some other accepted method.

Body-Seat Ring: Shall be constructed of Grade A bronze, and shall be back-faced threaded and machined screwed into the valve body.

Wedges: Double-disc gate valves shall be equipped with a free and positive-operating internal device which will press the disc seats firmly against the body seats when the valve is closed and release the load before the discs begin to move when the valve is opened. Wedges shall be simple and rugged in design. The wedge material shall be as specified in AWWA C-500 and contact surface shall not be iron to iron.

Valve Stem: Shall be constructed of low zinc bronze CDA Copper Alloy No. C99500 with a minimum yield strength of 40,000 psi and minimum elongation in 2-inches of 10%. The opening through the bonnet for the stem shall be bushed with grade A, B, C, D, or E bronze as defined in AWWA C-500.

Yoke: The yoke may be either integral or bolted on to bonnet. The design shall be such that a hand may not be jammed between the yoke and handwheel.

Valve Operator: Shall be a cast iron, ASTM A-126 Class B, wrench nut. The nut shall have a 2- inch square base and shall be 1-15/16-inches square at the top and be 1-3/4-inch high and shall open counterclockwise (left). The wrench nut shall be painted black and an arrow indicating direction of opening shall be cast on the nut, according to AWWA C-509.

Protective Coating: An epoxy coating shall be applied to all exterior and all stationary interior ferrous surfaces including all interior openings in the valves body. The coating shall not be applied to the gasket surfaces of the end flanges.

The coating shall be applied in accordance with AWWA C-550 and the manufacturer's instructions. After the coating is completely cured, the coated surface shall be tested for porosity, holidays, and pinholes using a holiday detector. All holidays or irregularities shall be repaired and the coating again tested.

C. NON-RISING STEM (NRS) RESILIENT-SEATED GATE VALVES: Non-Rising Stem Gate Valves are to be resilient seat, non-rising stem and shall have a minimum rated working pressure of 200 psig and shall comply with AWWA C-509 "Resilient-Seated Gate Valves for Water and Sewage Systems" and AWWA C-550 "Standard for Protective Coatings for Valves and Hydrants". The valves design shall not have any recesses, insets in the bottom of the waterway which would promote build-up or collection of residue and debris. Resilient Seated Gate Valves shall be provided for the size specified.

With the valve open, the valve shall provide an unobstructed waterway that has a diameter not less than the full nominal diameter of the valve. The minimum number of turns to open the valve shall be three times the valve diameter.

Acceptable manufacturers and models shall be:

AMERICAN FLOW CONTROL	Series 500, Series 2500
CLOW	2640 (Figure F-6100)

KENNEDY	8571 KEN-SEAL II
M&H	3067
US PIPE	METROSEAL 250
MUELLER	A-2360

Submittals: Submittals shall be provided in accordance with Article 5.3 of this Section. Also, the manufacturer shall provide approved certified test data or an affidavit stating that the valve complies with AWWA C-509 Section 6.1 and the following, in accordance with Section 6.2:

Hydrostatic Test: The manufacturer shall pressure test one valve of each size and class with 400 psi applied to one side and zero to the other. The test shall be made in each direction across the closed gate.

Torque Test: The manufacturer shall over-torque a valve of each size to demonstrate that no distortion of the valve stem occurs. The applied torque shall be 250 ft-lb for a 4-inch valve and 350 ft-lb for the larger valves in both the open and closed position.

Leakage Test: The manufacturer shall select two valves of each size to be fully opened and closed for 500 complete cycles with a 200 psi differential pressure across the gate. The valve shall be drip tight upon completion of the test.

Pressure Test: One valve of each size shall be tested, with the gate fully open, to a pressure of 500 psi. There shall be no evidence of rupture or cracking of valve body, bonnet or seal plated.

Markings: Shall be cast on the bonnet or body of each valve. Markings shall include the manufacture's name or mark, the year the valve casting was made, the size of the valves, and the designated working pressure.

Valve Ends: Shall be mechanical joint or flanged ends as specified.

Valve Body and Bonnet: Shall be cast iron conforming to ASTM A-126, or ductile iron conforming to ASTM A-536 or A-395.

Bolts: All bonnet and seal plate bolts shall be factory installed and made from stainless steel ASTM A-276 with either regular square or hexagonal heads with dimensions conforming to ANSI B18.2.1.

Wedge: The wedge shall be cast iron or ductile iron fully encapsulated with resilient rubber material bonded to the disc. The method for bonding the resilient material shall be confirmed by ASTM D-429 as required by AWWA C-509.

Valve Stem: Shall be constructed of low zinc bronze CDA Copper Alloy no. C99500 with a minimum yield strength of 40,000 psi and minimum elongation in 2-inches of 10%.

Stem Seals: Shall consist of two O-rings such that the seal above the stem collar can be replaced with the valve under pressure in the fully open position. O-rings shall meet

the requirements of ASTM D-2000 and have physical properties suitable for the application.

Valve Operator: Shall be a cast iron, ASTM A-126 Class B, wrench nut. The nut shall have a 2-inch square base and shall be 1-15/16-inch square at the top and be 1-3/4-inch high and shall open counterclockwise (left). The wrench nut shall be painted black and an arrow indicating direction of opening shall be cast on the nut, according to AWWA C-509.

Protective Coating: An epoxy coating shall be applied to all exterior and all stationary interior ferrous surfaces including all interior openings in the valves body. The coating shall not be applied to the gasket surfaces of the end flanges.

The coating shall be applied in accordance with AWWA C-550 and the manufacturer's instructions. The epoxy coating shall have a minimum dry film thickness of 8 mils. After the coating is completely cured, the coated surface shall be tested for porosity, holidays, and pinholes using a holiday detector. All holidays or irregularities shall be repaired and the coating again tested.

D. AIR RELEASE, AIR/VACUUM, and COMBINATION AIR VALVES: Air-Release, Air/Vacuum and Combination Air Valves shall comply with AWWA C-512 and the following specifications. These specifications shall apply to valve sizes 6" and smaller.

Air Release Valves (AR) shall be designed to automatically release accumulated air pockets within the pipeline while in operation and under pressure. Air release valves shall be APCO Model 200, Val-Matic Model 38, or Crispin Model P.

Air/Vacuum Valves (AV) shall be designed to allow large volumes of air to escape through the valve orifice when filling a pipeline and to close watertight once the air has been expelled. Air and vacuum valves shall also permit large volumes of air to enter through the valve orifice when the pipeline is being drained to break the vacuum. Air and vacuum valves shall be APCO Series 140, Val-Matic Series 100, or Crispin Model AL.

Combination Air Valves (CAV) shall be heavy-duty air and vacuum valves with air release. Combination Air Valves shall be designed to release accumulations of air at high points within a pipeline by exhausting large volumes of air as the pipeline is being filled and by releasing accumulated pockets of air while the pipeline is in operation and under pressure. Combination air valves shall also be designed to permit large volumes of air to enter the pipeline during pipeline drainage. Combination Air Valves shall be APCO, Val-matic Series 200, or Crispin Model C.

Submittals: The manufacturer shall provide an affidavit stating that the valve and all materials used in its construction conform to the applicable requirements of AWWA C-512 and these specifications. When required, the manufacturer shall provide and affidavit stating that the valve has been tested and is in compliance with the requirements specified in Section 5.1 of AWWA C-512.

Markings: Manufacturer's name or trademark, size of valve, and the designated maximum working pressure rating shall be cast in the body or marked on a corrosion-resistant name plate.

Body and Cover: Each air valve shall have a cast or ductile iron body and cover. Cast iron shall comply with ASTM A-126 Class B, or ASTM A-48 Class 35. Ductile iron shall comply with the requirements of ASTM A-536, Grade 65-45-12. Bolting material shall meet or exceed the strength requirements of ASTM A-307. All internal trim shall be of stainless steel.

Float: Shall be stainless steel. Float shall be baffled to prevent air from blowing valve closed until air is exhausted. Valve body, float, etc., shall be designed for a working pressure equal to that of the system in which it is installed. Floats for valves with inlet sizes less than 4" shall be capable of withstanding a collapse pressure of 1000 psig. For larger inlet sizes, floats shall be capable of withstanding a collapse pressure of 750 psig.

Valve Outlet: Shall be fitted to attach discharge pipe as indicated. Valve inlet shall be N.P.T. for 2-inch and smaller valves. Valve inlet shall be ANSI flange for 3-inch and larger valves. Flange rating shall equal or exceed the maximum working pressure of the system in which it is installed.

Installation: Air release and air/vacuum valves shall be installed within valve vaults, or manhole, in accordance with Utility Standard Details 263-1, 263-2, 263-3, 263-4 and plans.

Protective Coatings: Interior surface coatings shall not be required unless otherwise specified. External surfaces shall be coated with the manufacturer's standard primer.

1.5 INSTALLATION

Carefully handle and install valves horizontally in such a manner as to prevent damage to any parts of the valves. Installation shall be in accordance with manufacturer's instruction. Valves delivered closed to the site shall be opened by the Contractor prior to installation. The Contractor shall record the number of turns required to open the valve. This information shall be submitted to the Utility on the standard valve report.

Valves shall be polyethylene-wrapped in accordance with AWWA C-105, unless otherwise specified. Thrust blocking shall be provided as specified in Section 3.1 of these specifications.

1.6 TESTING

Upon completion of installation of the valves, an acceptance test shall be conducted to verify the satisfactory operation of the valves. The unit shall be checked for operation and leakage. The valves must perform in a manner acceptable to the Engineer before final acceptance will be made by the Owner.

1.7 FITTINGS

A. GENERAL: Fittings as specified herein shall be ductile iron (DI) for use with ductile iron or polyvinyl chloride (PVC) water pressure or transmission pipe.

All fittings shall be smooth cement lined in accordance with AWWA C-104 and shall be outside asphaltic coated per AWWA C-110.

The size, body type, type of joint ends, and applicable reference standard, shall be as shown on engineering drawings or as specified.

Standards: Fittings shall comply with applicable requirements of the following:

ANSI B16.1	Cast Iron Pipe Flanges and Fittings
AWWA C-104	American National Standard for Cement-Mortar Lining for Ductile- Iron Pipe and Fittings for Water
AWWA C-105	Standard for Polyethylene Encasement for Ductile Iron Pipe and Fittings
AWWA C-110	American National Standard for Ductile-Iron and Gray-Iron Fittings, 3 Inches through 48 Inches, for Water and Other Liquids
AWWA C-111	Rubber-Gasket Joints
AWWA C-153	American National Standard for Ductile-Iron Compact Fittings, 3 Inches through 16 Inches, for Water and Other Liquids

B. The following minimum requirements of TABLE A and TABLE B shall apply to the specified fittings.

TABLE A - STANDARD SHORT-BODY FITTINGS PER AWWA C-110

TYPE OF JOINT	DIAMETER (inches)	RATED WORKING PRESSURE (psi)	MATERIAL
Mechanical (Rubber Gasket/C-111)	4-24	350	DI
Flanged	4-24	250	DI
All types	30-80	250	DI
Push-On (Rubber Gasket/C-111)	4-24	250	DI

TABLE B - COMPACT SHORT-BODY FITTINGS PER AWWA C-153

TYPE OF JOINT	DIAMETER (inches)	RATED WORKING PRESSURE (psi)	MATERIAL
Mechanical or Push-On (Rubber Gasket/C-111)	4-24	350	DI

C. All joint accessories such as gaskets, glands, bolts, and nuts shall be furnished with mechanical joints, and gaskets and lubricant shall be furnished with push-on joints in sufficient quantity for assembly of each joint.

D. Push-on joint fittings shall be marked with the proprietary name or trademark of the joint.

E. Fittings shall be marked on the outside with their applicable AWWA Standard and information called for by the Standard.

F. Fittings shall be polyethylene wrapped in accordance with AWWA C-105.

1.8 VALVE VAULTS

A. GENERAL: Pre-cast vaults shall be as shown on the Plans. Bases shall be pre-cast or cast-in- place as indicated on the Drawings.

B. QUALITY ASSURANCE: Vaults shall meet the requirements of ACI 318. All vaults shall be designed for a minimum H-20 loading per AASHTO Specifications, plus a 30 percent impact factor, or greater if indicated on the Drawings or specified.

Mark date of manufacture and name or trademark of manufacturer on inside of each pre-cast vault section.

C. SUBMITTALS: Structural calculations sealed by a Structural Engineer registered in the State of Texas shall be submitted for approval, along with Shop Drawings.

D. PRODUCTS AND MATERIALS: Concrete shall have a minimum 28-day compressive strength of 4,000 psi. Reinforcing steel shall meet the requirements of SECTION 3.1, Concrete.

An approved flexible joint shall be provided between each pipe entering and exiting the vault. The joint shall provide a watertight installation. Submit jointing system or material for approval.

Metal frames, covers, steps, toe pockets and similar required items shall be provided as shown.

E. INSTALLATION: Cast-in-place bases shall be placed on suitable foundations after the pipes are laid. Special care shall be taken in placing the concrete around the bottom of the pipes to obtain a waterproof structure. An approved bell shall be cast in the base to receive the pipe sections forming the barrel.

Pre-cast bases shall be set on a concrete or crushed stone foundation as shown. Pre-cast bases shall be set at the proper grade and carefully aligned. Set pre-cast vault sections vertical in true alignment. Install sections, joints, and gaskets in accordance with manufacturer's recommendations.

Lifting holes shall be sealed tight with a solid rubber plug driven into hole and the remaining void filled with cement-sand mortar.

END OF SECTION 331216

SECTION 331613 – UTILITY MISCELLANEOUS MATERIALS

1.1 CONCRETE *(May be superseded by governing agency)*

A. SCOPE: The Contractor shall furnish all materials, equipment, labor superintendence and incidentals necessary to mix and place concrete, consisting of Portland cement, fine aggregate, coarse aggregate, admixtures, and water in the proper proportions as specified herein.

B. QUALITY ASSURANCE: Concrete shall be proportioned to give the necessary workability and strength and shall conform to the following requirements:

CLASS	MINIMUM 28-DAY COMPRESSIVE STRENGTH	MINIMUM CEMENT (bag/cu yd)	MAXIMUM SIZE COARSE AGGREGATE	SLUMP (inches)
A	3,000 psi	5.5	3/4"	3-1/2"
B	2,500 psi	4	1-1/2"	4"
C	4,000 psi	6	3/4"	4"

The class designations provided above are as defined by the Utility.

Class A shall be used for curb, gutter and sidewalk replacement.

Class B shall be used for thrust blocks, sewer pipe encasement, ground anchors for piping, and as noted in the plans.

Class C shall be used for special structures or as required by manufacturer's specifications for pre- cast structures and cast-in-place sewer manhole bases.

C. SUBMITTALS: Submit certified test reports regarding concrete mix design and reinforcing steel as may be required by the Contract Documents or the Utility Engineer. Submit in a timely manner so as not to delay the project. Allow sufficient time for Engineer's review and resubmission, if necessary.

D. STANDARDS: Concrete and related products shall comply with applicable requirements of the following:

ASTM C-33 Specification for Concrete Aggregates
ASTM C-150 Specification for Portland Cement
ASTM C-260 Specification for Air-Entraining Admixtures for Concrete
ASTM C-494 Specification for Chemical Admixtures for Concrete

E. MATERIALS: Portland Cement: Shall conform to ASTM C-150 for the appropriate required Type.

Aggregates: Shall conform to ASTM C-33. Fine aggregate shall consist of natural, washed and screened sand having clean, hard, strong, durable, un-coated grains

complying with ASTM C-33. Coarse aggregates shall comply with ASTM C-33 Size 467, or Size 57, or Size 67. Local aggregates of proven durability may be used when acceptable to the Engineer.

Air-Entraining Admixture: Shall be used for concrete of 3,000 psi or greater and shall comply with ASTM C-260. The total average air content shall be in accordance with ACI 211.1.

Water Reducing Admixture: Shall be used when required by job conditions and shall comply with ASTM C-494. Use only admixtures which have been tested and accepted in mix designs, unless otherwise acceptable. Shall be used according to manufacturer's recommendations.

Set Retarding Admixtures: Shall comply with ASTM C-494 and be used with approval of the Engineer. Shall be used according to manufacturer's recommendations.

Water: Shall be clean and free from impurities. Drinking and ordinary household water is acceptable.

F. MANUFACTURED PRODUCTS: The forms shall be of wood or metal and shall be of sufficient strength to support the concrete without bulging between supports and sufficiently water tight to hold the concrete mortar. The forms shall be so constructed that the finished concrete shall be of the form and dimensions shown on the plans. All form work for exposed surfaces shall be of such material and so constructed so as to produce a smooth, even surface when the concrete is poured. All forms shall be oiled before use. In general, wall forms may be removed after the concrete has been in place for 24 hours. All exposed edges shall have a 3/4-inch chamfer whether or not so shown on the details. Immediately upon removal of the form, any honeycombed sections shall be repaired as directed.

Embedded Items: All bolts, pipe, pipe sleeves, inserts or other fixtures, required by the plans or these specifications to be embedded in the concrete, shall be set accurately in place and maintained in such positions during concreting operations.

Reinforcing Steel: Metal reinforcements shall conform to the following requirements. Bar Reinforcement shall be round, deformed bars, Grade 60, conforming to either "Specification for Rail Steel Deformed and Plain Bars for Concrete Reinforcement" (ASTM A-616), or "Specifications for Axle Steel Deformed and Plain Bars for Concrete Reinforcement" (ASTM A-617).

Rail Steel Bars will be permitted only where bending is not required. All reinforcement bars shall be permanently marked with grade identification marks or shall, on delivery, be accompanied by a manufacturer's guarantee of grade which will identify variation. Reinforcement stored on the site shall be protected from accumulation of grease, mud or other foreign matter and from rust producing conditions. Bars shall be free from rust, scale, oil, mud or structural defects when incorporated in the structures. Reinforcements shall be accurately placed and securely held in place during placement of concrete in accordance with the ACI Detailing Manual.

G. CONCRETE THRUST BLOCKING: All underground piping shall be blocked with concrete, bearing solidly against undisturbed trench walls, at all changes in direction.

The concrete blocking shall be placed against undisturbed trench walls with a minimum 18-inches between trench wall and pipe. Blocking shall extend a minimum of 0.75 **x** pipe diameter below and above the centerline of pipe and shall not extend beyond any joints. Blockings shall be placed in accordance with the recommendations of "A Guide for the Installation of Ductile Iron Pipe" published by Cast Iron Pipe Research Association.

If requested by the Owner, the ends of the thrust blocks shall be contained in wood or metal forms. Where upward thrusts are to be resisted, concrete anchor shall be reinforced.

Concrete used for Blocking shall be Class B. The minimum square feet of area of concrete bearing against undisturbed trench bank shall be in accordance with the following table:

BEARING SURFACE PER BEND		
PIPE SIZE	**TEE, DEAD END, 90 DEGREE BEND**	**45 AND 22-1/2 DEGREE BEND**
6"	4 sq. feet	3 sq. feet
8"	6 sq. feet	3 sq. feet
12"	13 sq. feet	7 sq. feet
16"	23 sq. feet	12 sq. feet

1.2 GROUT

A. SCOPE: Where called for in the plans or specifications, the Contractor shall provide all labor, materials, equipment, and incidentals required for grouting.

B. STANDARDS: Grout shall comply with applicable requirements of the following:

ASTM C-33 Specification for Concrete Aggregates
ASTM C-150 Specification for Portland Cement

C. MATERIALS: Types of grout may include the following

<u>NON-SHRINK, EPOXY TYPE</u>: Shall be a non-metallic, 100% solids, high strength epoxy grout such as Epoxtite as manufactured by A.C. Horn Company, or Five Star Epoxy Grout by U.S. Grout Corporation, or equal.

<u>NON-SHRINK, NON-METALLIC TYPE</u>: Shall be a premixed nonstaining cementitious grout requiring only the addition of water at the job site. Provide Darex In-Pakt Grout Pre-mix by A.C. Horn Company, or Masterflow 713 by Master Builders Company, or

equal.

ORDINARY CEMENT-SAND GROUT: Consisting of 1 part by weight of Portland cement complying with ASTM C-150, Type V, to 3 parts by weight of clean sand of suitable gradation and complying with ASTM C-33.

At the Contractor's option, ordinary grout may be 4 sacks of masonry cement per cubic yard of clean sand, together with approved air-entraining agent and a minimum of clean water for placing. Where water repelling and shrinkage reducing requirements are shown or specified, use approved admixtures.

WATER: Use clean, fresh, potable water free from injurious amounts of oils, acids, alkalis, or organic matter.

END OF SECTION 331613

SECTION 331615 – UTILITY SITE WORK

Submittals shall include certified test reports for embedment material. Certified test reports shall be from an independent laboratory. Test reports shall include sieve analysis and Atterberg limits.

1.1 PIPE ZONE AND FINAL BACKFILL MATERIALS

A. STANDARDS:

Embedment materials shall comply with applicable requirements of the following:

ASTM D-75 Methods for Sampling Aggregates
ASTM D-448 Specification for Standard Sizes of Coarse Aggregate for Highway Construction
ASTM D-2321 Recommended Practice for Underground Installation of Flexible Thermoplastic Sewer Pipe
ASTM D-2487 Classification of Soils for Engineering Purposes

B. DEFINITIONS:

For the purpose of this specification, "pipe zone" shall define the area extending from the bottom of the trench to 12 inches above the top of the pipe and to the undisturbed trench walls on either side of the pipe.

"Embedment" shall be defined as those vertical stratas of backfill material in the pipe zone consisting of bedding, haunching, and initial backfill, as defined in ASTM D-2321, and shown in the Utility's Standard Detail No. 170 (see Design Standards for Water and Sanitary Sewer Facilities).

C. SUBMITTALS:

Submittals shall include certified test reports for embedment material. Certified test reports shall be from an independent laboratory. Test reports shall include sieve analysis and Atterberg limits.

A gradation of Class I material shall be submitted by the Contractor to the Engineer for approval prior to use.

D. PIPE ZONE BACKFILL: Based on project specific criteria, the Utility will approve one of the following embedment materials for use in pipe zone. Refer to Section 4.3 for additional information.

CLASS I material shall be manufactured angular, well-graded, crushed stone per ASTM D-2321, ¼-inch to 1-1/2-inch size. The following materials shall be acceptable under this class designation: ASTM D-448 - Stone Sizes 4, 67, 5, 56, 57, and 6. Pea Gravel and other uniformly graded material are not acceptable under this class.

CLASS II material shall be coarse sands and gravels per ASTM D-2487 with maximum particle size of 1-1/2 inches, including variously graded sands and gravels, containing less than 12 percent fines (material passing the #200 sieve) generally granular and non-cohesive, either wet or dry. Soil Types GW, GP, SW, and SP are included in this class.

CLASS III material shall be fine sand and clayey (clay filled) gravels, per ASTM D-2487, including fine sands, sand-clay mixtures, and gravel-clay mixtures. Class III includes soil Types GM, GC, SM, and SC.

Under no circumstances shall Class IV or V material, as defined in ASTM D-2487, be used for embedment of flexible pipe.

Materials shall be classified according to The Unified Soil Classification System as defined in ASTM D-2487 (Refer to Appendix Section B).

E. FINAL BACKFILL: Material for backfilling above the pipe zone shall be defined as follows:

NATIVE: The most granular material excavated from the trench comprising the spoil bank may be used, provided it is devoid of rocks larger than three inches in greatest dimension, organic material, and other unsuitable material. If initially saturated during the excavation, the backfill shall be allowed to dry sufficiently, being manipulated if necessary, prior to placing back into trench, to achieve the specified compaction at plus or minus 2 percent of optimum moisture content.

SELECT: If material excavated from the trench is unsuitable as backfill material, or the required compaction is unattainable for the particular spoil backfill material, the Contractor shall, at his expense, import select material to be mixed with or used in place of the spoil material. Select material shall be designated as Class II as described in SECTION 4.1.

SOIL CEMENT: Where cement stabilized backfill is shown on the Drawings, or required by governing jurisdiction or utility, it shall consist of a mixture of soil or sand and two sacks of Portland cement per cubic yard. Soil shall be a sandy material, free from lumps, clods, or organic material. If excavated material is not suitable, pit-run sand shall be used. Cement stabilized backfill shall be mixed in a concrete mixer or transit mixer.

F. SOURCES AND EVALUATION TESTING: Materials to be used for embedment and for backfill shall be obtained in accordance with a sampling plan and ASTM D-75. Testing of materials to certify conformance with specification requirements shall be performed by an independent testing laboratory approved by the Owner, at the Contractor's expense. Contractor's testing agency shall perform tests upon change of source and at sufficient intervals to certify conformance of all material furnished for use on this project.

1.2 TRENCH EXCAVATION AND PREPARATION

A. GENERAL: Classification of excavation shall be "unclassified" and involves removing unnecessary materials and excavating trenches to the alignment, width, and depth as indicated in the plans or as required for the proper installation of the pipe and appurtenances. Adjacent structures shall be protected from damage by construction

equipment. All excavated material shall be piled along the trench in a manner which will not endanger the work.

B. TRENCH WIDTH: The trench walls in the "pipe zone" shall be vertical. Trench width for

FLEXIBLE PIPE shall generally be:

FLEXIBLE PIPE - TRENCH WIDTH		
PIPE DIAMETER	**TRENCH WIDTH = BARREL OUTER DIAMETER PLUS**	
	Minimum	**Maximum**
Less than 24"	15"	18"
24" - 48"	18"	24"
Greater than 48"	24"	½" Pipe O.D.

Trench width at the top of the pipe for **RIGID PIPE** shall not exceed the outside diameter of the pipe barrel, plus the following allowance:

RIGID PIPE - TRENCH WIDTH	
PIPE DIAMETER	**TRENCH WIDTH = BARREL OUTER DIAMETER PLUS**
Less than 18"	16"
18" - 24"	19"
27" - 39"	22"
42" & Larger	½" Pipe O.D.

If maximum trench width specified above is exceeded at the top of the pipe, the Contractor shall provide, at his expense, additional load-bearing capacity by means of improved bedding, concrete cradle, cap, or encasement, or other means approved by the Engineer.

Trench walls above the pipe zone may be laid back or benched, where space permits, as necessary to satisfy the requirements of OSHA. Additional requirements are specified in Article E of this SECTION 4.2 for Trench Support.

Wherever the prescribed maximum trench width is exceeded, the Contractor shall remove all loose and sloughed-in material from the trench and replace with compacted granular material such that haunching and initial backfill is compacted to at least 2.5 pipe

diameters from either side of the pipe or to the trench walls at no additional cost to the Owner.

Unless otherwise agreed upon, no additional payment will be made to the Contractor for extra material and labor required to fill excessive trench widths caused by the Contractor's equipment or natural collapse of trench walls.

C. TRENCH BOTTOM: Excavate the trench to an even grade so that the full length of the pipe barrel is supported and joints may be properly assembled.

For 30-inch diameter and smaller pipe, the trench shall be "rough cut" a minimum of 4 inches below the bottom of the pipe. For 33 inches and larger pipe, the trench shall be "rough cut" a minimum of 6 inches below the bottom of the pipe. The "rough cut" dimension shall be increased as necessary to provide a minimum clearance of 2 inches from the bottom of the trench to the bottom of the bells, flanges, valves, fittings, etc.

The entire foundation area at the bottom of all excavations shall be firm, stable material. Loose material shall be removed, leaving a clean, flat trench bottom, and material shall not be disturbed below required subgrade except as hereinafter described.

If the subgrade is soft, spongy, disintegrated, or where the character of the foundation materials is such that a proper foundation cannot be achieved at the elevation specified, the Contractor shall deepen the excavation, not less than 6-inches to a depth where a satisfactory foundation may be obtained. The subgrade shall then be brought back to the required grade with Class I coarse gravel compacted to seventy percent (70%) relative density per ASTM D-4254.

D. OVER EXCAVATION: If the trench is excavated to a faulty grade (at a lower elevation than indicated), correct the faulty grade at no additional cost to the Owner, as specified below:

1. In uniform, stable dry soils, correct the faulty grade with Class II granular embedment material thoroughly compacted to ninety percent (90%) Modified Proctor Density per ASTM D-1557.
2. In soft spongy disintegrated soils, or where necessary to allow proper drainage, correct the faulty grade with Class I coarse gravel compacted to seventy percent (70%) of relative density.

E. ROCK EXCAVATION: When pipe is to be laid in rock cut, provide a clearance of at least 6 inches below parts of the pipe, valves or fittings. Provide adequate clearance at bell holes to permit proper jointing of pipe laid in rock trenches. Refill excavation to pipe grade with Class II granular embedment material compacted to ninety percent (90%) Modified Proctor Density. Unless specifically required and called for in the specifications, and with a permit issued by governing authorities, blasting shall not be permitted.

F. BELL HOLES: Bell holes of ample dimension shall be dug in trenches at each joint of pipe to permit the jointing to be made properly, visually inspected, and so that the pipe will rest on the full length of the barrel.

G. DEWATERING: Dewater excavations so that the work is performed in the "dry". Bailing, pumping, and dewatering shall be at the Contractor's expense. Use coarse gravel instead of embedment material under the pipe in dewatered excavations to provide for the free drainage and flow of water in the pipe trench, where it is necessary, in order to keep the water level below the pipe barrel and bell holes for joints. The elevation of the groundwater level prior to dewatering shall be determined and recorded.

Unless otherwise specified, the method of dewatering shall maintain a phreatic water surface a minimum of 18-inches below pipe grades. Should over-excavation be necessary due to unsuitable foundation conditions, the ground water shall be additionally lowered as necessary.

The water removed from trenches shall be conducted to natural drainage ways, drains, or storm sewers in such a manner as to prevent damage to adjacent property or to the public. Pumps of ample capacity and in duplicate must be provided to insure that once an excavation is dried, the water level remains below the trench depth until that portion of the work is completed. The Contractor shall be responsible for obtaining approval for discharge from the appropriate governing agency. Under no circumstances will the Contractor be permitted to discharge into the sanitary sewer system.

When dewatering on a particular project may affect the production of private wells along the route, the Contractor shall determine if any wells used for domestic purposes are affected by the dewatering and shall furnish potable water to any affected residents. Metered connections to the existing public water system will be made by the Owner. The Contractor shall install any temporary lines from these meters to properly serve the affected residents.

Where dewatering is required, the Contractor shall submit to the Engineer, a dewatering plan indicating proposed locations of dewatering wells, pumping facilities, collector and discharge pipe-lines, and discharge points (names of ditches, laterals, etc.) for his records. The plan shall be available for El Paso County Water Improvement District No. 1 (EPCWID #1) approval and comments. To comply with the requirements of the discharge permit between the Owner and the EPCWID #1, the Contractor shall provide discharge monitoring points to El Paso Water Utilities (EPWU) personnel, who will obtain samples for laboratory analysis to check water quality limitations imposed by the permit. The Contractor shall assist the Owner's personnel in recording pumping rates at dewatering wells, pump times, and flows and shall become familiar with the methods of measurements according to the following schedule:

DATA RECORDED	METHOD OF MEASUREMENT	FREQUENCY OF MEASUREMENT
Pumping Rate At Each Dewatering Well or Discharge Point	"California-Pipe Method"	Daily If Changes Occur
Pumping Time	Hours	Daily
Total Dissolved Solids (TDS)	PSB Laboratory	Twice Per Month
Total Discharge	Rate x Time	Continuous

The data obtained shall be recorded by the Contractor on a standard data sheet, and submitted monthly to the EPCWID #1. The Contractor shall be responsible for coordination of all requirements with the EPCWID #1.

It is the responsibility of the Contractor to dispose of the water from the dewatering operation according to the conditions of the discharge permit. However, the Contractor will not be required to pay fines, imposed by the EPCWID #1, regarding the quality of discharge.

Engines or engine generators used to run the dewatering pumps shall be equipped with residential grade silencers. The silencers shall have an attenuation range of 25 to 30 dBA as required by the El Paso Municipal Code, Title 9, Chapter 9.40.

The Contractor shall coordinate the dewatering effort with El Paso Water Utilities Engineering staff, insofar as compliance with discharge permit is concerned, and where dewatering effluent will enter drainage ditches operated and maintained by the District.

EPCWID #1 which authorizes dewatering into its facilities under certain terms and conditions and with whom the Owner has negotiated specific basic fees and procedures.

The selected Bidder is required to submit a Dewatering Plan, a Final Schedule for Dewatering, and an estimate of fees due EPCWID #1 to the ENGINEER. The Plan is due within fifteen (15) working days from the date of the Notice to Proceed. The Plan is a mandatory Submittal and shall include the estimated quantities of dewatering for each month of the Project and the point(s) of discharge. ENGINEER will review and approve the Dewatering Submittal and forward it, through the Owner, to the District. The Owner must receive the approved plan at least two weeks in advance of the planned dewatering operations. Dewatering Fees due are to be estimated on the following basis:

1. Drain Maintenance Fee of $1,000 for each six (6) months a discharge occurs;
2. Dewatering performed between February 16th-October 14th at $50 per acre foot;
3. Dewatering performed between October 15th-February 15th at $25 per acre foot.

The Contractor will prepay dewatering fees to EPCWID #1 based upon the estimates in the approved Submittal. Contractor shall provide a copy of their receipt and release from EPCWID #1 before OWNER will allow dewatering to begin.

The Contractor shall provide monthly reports of discharge quantities and quality (TDS and sulfates), which specific requirements may be more particularly described in the Technical Specifications, to the OWNER through the ENGINEER for submittal to EPCWID #1.

The Contractor may thereafter apply for reimbursement as detailed in the Measurement and Payment Clause of the Technical Specifications. It is anticipated that such reimbursements will be processed under similar terms and conditions as those for Stored Materials.

Final Payment to the Contractor shall not be made unless and until Contractor settles final dewatering fees due EPCWID #1 based upon final quantities of dewatering performed and provides a copy of their Final Release from the District.

The Contractor is responsible for all Dewatering Fees, including those for water pumped in addition to the quantities presented in the approved Dewatering Plan.

H. TRENCH SUPPORT: Excavations shall be braced and sheeted to provide complete safety to persons working therein and bracing shall comply with applicable federal (OSHA), state and local laws and ordinances. All trenches exceeding five (5) feet in depth, as measured from the ground surface at the highest side of the trench to the trench bottom, shall meet the requirements specified in the Utility's Specifications section entitled TRENCH EXCAVATION SAFETY SYSTEM attached in Appendix Section F of these Specifications.

Contractor shall be fully responsible for providing sufficient and adequate bracing for excavations with respect to work under construction and to adjacent utility lines and private property. Where soil conditions within trench area require support, Contractor may elect to use tight sheeting, skeleton sheeting, stay bracing, trench jacks, movable trench shield, or other approved methods to support the trench during pipe installation operations such as bedding preparation, pipe laying, and backfilling of haunches and initial zone.

Whenever possible, trench support shall not extend below the pipe crown. Where trench support must extend below the crown, such support should either be left in place or consist of approved steel sheets which can be retracted with minimal disturbance. Remaining voids shall be treated with grout or granular embedment material.

When a movable trench shield is used, the trailing half of the shield should be notched to the height of the top of the pipe. This will allow the haunch area of the pipe to be compacted properly to the wall of the trench. Dragging of a trench shield at pipe grade may be done provided such practice does not disturb the bedding. Voids created by the shield shall be filled and compacted properly.

I. TRENCHING IN PUBLIC RIGHT-OF-WAY: Except where otherwise specified, indicated on the Plans, or accepted in writing by the Engineer, the maximum length of open trench, where the construction is in any stage of completion, shall not exceed the linear footage as set forth in the following. The definition of "open trench" for the purposes of this description will include excavation, pipe laying, backfilling, and pavement replacement. The descriptions under the area designations are general in nature and may be amended in writing by the Engineer due to particular or peculiar field conditions.

BUSINESS DISTRICT AREAS - 300 LINEAR FEET: Store front areas.

COMMERCIAL AREAS - 300 LINEAR FEET: Industrial, shopping centers, churches, schools, hotels, motels, markets, gas stations, government and private office buildings, hospitals, fire and police stations, and nursing homes.

RESIDENTIAL AREAS – ONE (1) BLOCK OR 300 LINEAR FEET, WHICHEVER IS THE LEAST: Single and multi-family residences, apartments, and condominiums.

UNDEVELOPED AREAS - 1,500 LINEAR FEET: Parks, golf courses, farms, undeveloped subdivided land.

Any excavated areas shall be considered as "open trench" until all pavement replacement has been made, or until all trenches outside of pavement replacement areas have been backfilled and compacted in accordance with these Contract Documents. Trenches across streets shall be completely backfilled with temporary or permanent pavement in place within 72 hours after pipe laying. An open trench shall not be permitted overnight, unless adequately barricaded and approved by the Engineer.

Contractor shall provide steel plates with adequate trench shoring and bracing, designed to support traffic loads where required to bridge across trenches at street and alley crossings, commercial driveways, and residential driveways where trench backfill and temporary patch have not been completed during regular working hours. Safe and convenient passage for pedestrians shall be provided. The Engineer may designate a passage to be provided at any point he deems necessary. Access to fire stations, fire hydrants, and hospitals shall be maintained at all times.

1.3 PIPE INSTALLATION

A. GENERAL: Pipe shall be laid true to lines and grades as indicated on the drawings. All pipe and fittings shall be inspected before laying in the trench. Clean all joint surfaces and soiled materials prior to connecting one another. As work progresses, maintain interior of pipes clean.

B. STANDARD COVER: Standard cover shall depend on the water main size and installation conditions. Standard cover shall generally be as follows:

6-Inch & 8-Inch Diameter Main:	Minimum of 4-foot cover from top of pipe to finished grade
12-Inch & Larger Diameter Main:	Minimum of 5-foot cover from top of pipe to finished grade

C. POTHOLING: Existing utilities shown on plans are for informational purposes only. Prior to new pipe installation, Contractor shall pothole all existing utilities and structures to confirm their location, depth, and size. In the event of conflict or discrepancy that affects the project design, Contractor shall notify the Engineer before proceeding with pipe installation in order to formulate a solution.

D. PIPE ZONE EMBEDMENT: Unless otherwise specified or shown in the drawings, pipelines shall be embedded in either Class I, II, or III material defined in Article C SECTION 4.1 and installed as here forth described. Contractor may use native or imported material for embedment provided material conforms to these Specifications.

Embedment materials shall be placed in lifts not exceeding 8 inches loose depth. Unless otherwise specified or directed in writing by the Engineer, all material in the embedment zone shall be homogeneous.

Bedding shall be placed to provide uniform and adequate longitudinal support under the pipe. Place the first lift of bedding material from the bottom of the trench to slightly above the bottom of the pipe grade. Unless otherwise shown in the drawings, bedding shall be a minimum of 4 inches in depth for pipe sizes 30 inches and smaller, and 6 inches for pipe sizes greater than 30 inches. Material shall be true to line and grade

with bell holes of ample dimension to permit pipe to rest on the full length of the barrel and to permit joint make-up and coating application at joints. Consolidate and compact the bedding material as described in Articles E and F of this SECTION 4.3, and lay pipe to indicated grade.

Place a second lift, and if required, subsequent lifts, of embedment material to the springline of pipe. This process shall be defined as **Haunching**. Material shall be sliced under the haunches of the pipe, carefully filling all voids, and using care to prevent movement of the pipe.

Place **Initial Backfill** using a third lift from the springline of the pipe to the pipe crown, and a fourth lift from the pipe crown to a point 12 inches above the pipe.

E. GROUNDWATER INSTALLATION: In areas where the pipe is installed below existing or future ground water levels, Class I material shall be used throughout the pipe zone and enclosed with a layer of approved geotechnical filter fabric. The fabric shall be placed carefully along the bottom of the trench and up the side of the trench a sufficient distance to lap over the top of the completed pipe installation. Fabric shall lap a minimum of 3 feet in the longitudinal at the end of one roll and beginning of the next, and lap 2 feet in the transverse at the top of pipe, except that for trench widths greater than 3 feet measured at the top of pipe, the top overlap shall be 3 feet. Follow manufacturer's recommendations for installation. Fabric shall be either Mirafi 140N, Dupont Typar 3401, or approved equal.

F. EMBEDMENT CLASS SCHEDULE: Unless otherwise shown in the project drawings, the Utility Standard Embedment Class designations for the pipe material types listed in Appendix Section C shall be used to define each particular pipe's **Embedment Condition** allowed under these specifications. The detail drawings shall be examined for additional information or other special bedding requirements.

G. CONSOLIDATION METHODS IN EMBEDMENT ZONE: Embedment backfill shall be compacted by equipment that is suitable for the type of soil encountered, and is capable of producing the degree of compaction specified. Where applicable, backfill materials shall be moisture conditioned to produce the required degree of compaction.

Hand or mechanical tamping shall be used to compact Class II or III material used in bedding, haunching, and initial backfill, except that the use of mechanical tampers or vibratory compactors directly over the pipe in the embedment area is prohibited. Caution in the use of mechanical compactors in the haunch and initial backfill to 12" above the pipe, shall be exercised to avoid damaging or mis-aligning the pipe.

Flooding or jetting shall not be used for compaction of embedment material for flexible pipe.

H. COMPACTION AND TESTING OF PIPE EMBEDMENT ZONE: Class I material used in the embedment zone may be placed by loose dumping with a minimum of compactive effort, except that care should be taken to assure proper placement of material under the pipe haunches. Class I material shall not specifically require testing unless directed by the Engineer, in which case, such test shall be measured by ASTM D-4254 by percent of relative density.

Class II material used in the embedment zone shall be compacted to a density of not less than 90% of Standard Proctor Density defined by ASTM D-698.

Class III material used in the embedment zone shall be compacted to a density of not less than 90% of Standard Proctor Density defined by ASTM D-698.

Moisture content in Class II or III material shall not exceed 3% over the optimum to assure proper compaction.

Unless otherwise directed by the Engineer, one compaction test in the embedment zone for Class II or III material shall be taken at 200 feet intervals along the trench on either side of the pipe, or at any other intervals as may be judged by the Engineer to be warranted by questionable installation conditions. For pipe sizes 8 to 12 inches diameter, the first test shall be performed on the side level with the top of pipe. For sizes 15-inches and larger, the first test shall be at the springline of the pipe. For all sizes, the second test shall be made at the top of the embedment zone.

I. DENSITY CONTROL AND LABORATORY TESTING: Unless otherwise specified reference to "maximum dry density" shall mean maximum density defined by ASTM D-1557 or D-698. Determination of density of backfill in-place, shall be in accordance with the requirements of ASTM D-2922.

Unless otherwise specified, the Owner shall select a soils testing laboratory and shall provide for initial density testing of in-place backfill; however, the Contractor shall pay for all additional density testing of backfills found not to be within the minimum requirements of the specifications.

Laboratory materials testing, including but not limited to determination of Atterberg Limits, Proctor Curves, Grain Size Analysis, as well as laboratory certification of manufactured materials, shall be at the Contractor's expense, and as further required by Section 4.1 of these specifications.

In the case of subdivisions or private ventures, where the developer has retained a Contractor to perform utility installations as allowed by the Utility's Public Service Board's Rules and Regulations, the word "Owner" above shall be deemed to be the developer.

Contractor shall notify the soils testing laboratory and City Engineering Field Inspection Department 24 hours in advance to obtain soil density tests to fulfill the compaction requirements of the project.

1.4 FINAL BACKFILL

A. GENERAL: As soon as practicable after laying and jointing of the pipe, the completion of embedment and the completion of structures, the trench shall be backfilled.

Take the necessary precautions to protect the pipe during backfilling operations.

Remove sheeting and shoring as backfilling operations progress. Incorporate methods

so that a good bond is achieved between the backfill material and the undisturbed trench walls. Where sheeting or trench protection is intact below the top of pipe and their removal cause obvious damage to the bedding and haunching, it may be necessary to leave portions of sheeting or bracing in place.

Caution, in the use of mechanical compactors in the haunch and initial backfill to 12-inches above the pipe, shall be exercised to avoid damaging or mis-aligning the pipe. Provide at least 3 feet of compacted cover over the top of the pipe before the trench is wheel-loaded, and 4-feet of cover before using pneumatic hammers during compaction. Contact between the pipe and compaction equipment shall be avoided at all times.

B. CONSOLIDATION METHODS: Backfill above the pipe zone to surface subgrade shall be with backfill material as indicated on the drawings and described in Article D of SECTION 4.1 of these Specifications. Backfill above the pipe zone shall be compacted by mechanical means. Water consolidation (flooding) may be used if approved by the City Engineer.

For mechanical compaction, place the backfill material above the pipe zone in lifts not exceeding 8-inches loose depth, moisten or aerate to obtain optimum moisture, and compact to the required density as described in Article C of this SECTION 4.5 of these Specifications.

The jetting method of water tamping will not be allowed.

When the ponding method of water tamping is permitted, backfill material above the pipe zone shall be placed in the trench not to exceed 3-feet loose depth, and flooded until free water is evident on the surface for at least two hours. Approximately one foot of water shall then be placed in the trench and subsequent lifts shall be started by depositing backfill material in the water until a maximum lift of 3-feet is placed. Additional water shall then be added to the backfill material until free water is again evident as before. This procedure shall be repeated until the entire trench is filled and thoroughly settled.

C. SOIL CEMENT BACKFILL: Where the drawings indicate that backfill for trenches under roads, driveways, concrete slabs, and in the zone of excavation for structures shall be cement stabilized, the backfill material shall be stabilized with a minimum of two sacks of Portland Cement per cubic yard of material placed. Cement stabilized soil shall be placed around all adjusted manholes.

D. COMPACTION AND TESTING FINAL BACKFILL: Under existing or proposed paved streets, final backfill shall be compacted to the following Modified Proctor Densities per ASTM D-1557 (refer to standard drawing details in Appendix Section D, "Typical Trench Backfill Detail under Existing or Proposed Paved Streets"):

Zone	Soil Condition	% of Proctor
Top of Pipe Embedment to 18" Below Finished Subgrade	Native Material As Specified	90%
Top of Finished Subgrade	Cohesive	90%
to 18" Below Top of Subgrade	Non-cohesive	95%

For all backfill in the areas not in existing or proposed paved streets, density of not less than 85% ASTM D-1557 shall be obtained from top of pipe bedding to ground surface.

Compaction tests will be required on backfill under proposed or existing streets and easements, and shall generally be as follows, unless otherwise directed by the Engineer:

a. Tests at 8-inches below subgrade at 200-foot intervals and not less than two per street at this level.
b. One test for every 2-feet of vertical trench backfill between top of pipe bedding and 18-inches below subgrade, at 200-foot horizontal intervals and not less than two per street at each level.

Additional test shall be taken by the Owner as deemed necessary.

The provisions for selection of the testing laboratory and Owner/Contractor responsibilities for density control as described in Article E of SECTION 4.1 and Article F of SECTION 4.3 shall apply to backfilling in this section

END OF SECTION 331615

SECTION 333913 - SANITARY SEWER SYSTEM

1.1 MANHOLE STRUCTURES

A. SCOPE: Contractor shall furnish all labor, materials, equipment and incidentals necessary to provide all manholes as required.

Manholes for the various sized lines shall be Standard Type "A" (48" inside diameter), Type "B" (72" inside diameter), or Drop Manhole constructed at the locations designated, and in accordance with Utility Standard Details, and as otherwise indicated in the project drawings.

Manholes shall be constructed pre-cast concrete sections, as herein specified.

B. QUALITY ASSURANCE: All manholes shall be free of visible leakage. Each structure shall be tested for leaks and inspected, and all leaks shall be repaired in a manner subject to Engineer's approval.

C. SUBMITTALS: Complete manufacturer's shop drawings on the manhole section(s), to include the joints, shall be submitted for approval. If the shop drawings do not meet specifications and secure the El Paso Water Utilities Engineer's approval, the vendor shall revise their shop drawings to meet specifications and receive Engineer's approval. Manufacturer's specification data and recommendations shall be submitted on the lifters and joint material.

Compliance with ASTM C-478 and these Specifications shall also be submitted. Failure to provide either the detailed shop drawings, specification data and recommendation on lifters and joint material, or the letter certifying that all material provided shall meet specifications shall be grounds for rejection of the material.

D. STANDARDS: Manhole structures shall comply with applicable requirements of the following:

ASTM A-48	Specification for Gray Iron Castings
ASTM A-82	Specification for Steel Wire, Plain, for Concrete Reinforcement
ASTM A-185	Specification for Steel Welded Wire, Fabric, Plain, for Concrete Reinforcement
ASTM A-615	Specification for Deformed and Plain Billet-Steel Bars for Concrete Reinforcement
ASTM C-32	Specification for Sewer and Manhole Brick (Made from Clay or Shale)
ASTM C-33	Specification for Concrete Aggregates
ASTM C-144	Specification for Aggregate for Masonry Mortar
ASTM C-150	Specification for Portland Cement
ASTM C-309	Specification for Liquid Membrane-Forming Compounds for Curing Concrete
ASTM C-478	Specification for Pre-Cast Reinforced Concrete Manhole Sections
ASTM C-923	Specification for Resilient Connectors Between Reinforced Concrete Manhole Structures and Pipes

ASTM D-1557 Test Methods for Moisture-Density Relations of Soils and Soil Aggregate Mixtures Using 10-lb (4.54-kg) Rammer and 18-in (457-mm) Drop

E. MATERIALS: Frame and Cover: The manhole frame and cover shall be of cast iron of the weight, dimensions, and pattern indicated by the Utility Standard Details. The casting shall be made from superior quality, gray cast iron conforming to the requirements of ASTM A-48. No holes shall be in the cover, but edge notches for embedded rings shall be used for lifting. "SEWER" or a suitable designation is to be on the cover. Mating surfaces shall be machined to assure a snug fit of the cover and frame.

Manhole Rings: Manhole rings used for a maximum 2-foot final grade shall conform to the applicable requirements of ASTM Specifications C-32, Grade MS.

Cement: Cement shall be Portland Cement conforming to ASTM Specifications C-150, Type V.

Mortar Sand: Mortar sand shall conform to ASTM Specifications C-144.

Concrete Aggregates: Concrete aggregates shall conform to ASTM Specifications C-33 except that the requirement for gradation shall not apply to concrete manhole conical and riser sections.

Steel Reinforcement: Billet-steel bars shall conform to ASTM Specifications A-615 and welded steel wire fabric shall conform to ASTM Specifications A-82 or to ASTM Specifications A-185.

Water: Water shall be clean, clear, free from oil, acid or organic matter and injurious amounts of alkali, salts or other chemicals or deleterious materials.

Mortar: Mortar shall be composed of 1 part Portland Cement Type V and 3 parts mortar sand mixed in an approved manner with water to form a workable mixture.

F. PRE-CAST CONCRETE MANHOLES: General: The manhole riser and conical section shall be designed for sewer and water installations in the diameters specified or shown. All manhole sections shall have a 5-inch wall thickness with tongue and groove, unless otherwise specified. Rings shall be available in various lengths from one foot to four feet. The conical sections shall be concentric and adapted to the ring at one end and to El Paso Water Utilities standard cast iron frame at the other. The base ring shall have a flat bottom joint. Steps or rungs are not required. Manufacturing of manhole section(s) shall comply with ASTM C-478 and any additional specifications listed here forth:

Concrete: Concrete to have a minimum 28 days compressive strength of 4000 psi. Water cement ratio shall be 0.5 or less by weight or not more than 5.5 gallons per sack.

Aggregates: All aggregates fine and coarse other than lightweight aggregate shall conform to specifications outlined by ASTM C-33. Aggregates shall be free of deleterious substances causing reactivity with oxidized hydrogen sulfide. Both types of aggregates

shall be graded in order to produce a homogeneous concrete mix. All materials are to be accurately weighed at a central batching facility for mixing.

Cement: All cement shall be Portland cement conforming to ASTM C-150, Type I or II for sewer applications. Cement content shall be sufficient to produce a minimum strength of 4,000 PSI, or other design strengths required.

Placing: All concrete shall be handled from the mixer or transport vehicle to the place of final deposit in a continuous manner, as rapidly as practicable, and without segregation or loss of ingredients, until (the approved unit operation) is completed. Concrete shall be placed in layers not over two feet deep. Each layer shall be compacted by mechanical internal or external vibrating equipment. Duration of the vibration cycle shall be limited to the time necessary to produce satisfactory consolidation without causing objectionable segregation.

Quality Assurance: The Engineer reserves the right to inspect the manufacturing process at any time to make tests on materials used, and to have cores cut out of the completed manholes for compressive strength testing and placement of reinforcement.

Curing: For purposes of early re-use of forms, the concrete may be heated in the mold after the initial set has taken place. The temperature shall not exceed 160 degrees and shall be raised from normal ambient temperature at a rate not to exceed 40 degrees per hour. The cured unit shall not be removed from forms until sufficient strength is obtained for the unit to withstand any structural strain that may be subjected during the form stripping operation. After the stripping of forms, further curing by means of water spraying or a membrane curing compound may be used and shall be of a clear or white type, conforming to ASTM C-309-58.

Steel Reinforcement: Reinforcing steel shall be as outlined in ASTM C-478 and any additional specifications herein. The minimum steel area of 0.12 square inches shall apply to both risers and cone sections and the maximum center to center spacing of 6 inches shall apply as well. Placing of reinforcing steel for one line circumferential reinforcement shall be on the tension side of the wall (the inner half part of the wall with a minimum 1-inch cover) for two lines circular reinforcement, refer to ASTM C-478. All reinforcing shall be sufficiently tied to withstand any displacement during the pouring operation.

Joint Reinforcement: Both tongue and groove shall contain a #4 re-bar.

Lifters: Lifters shall be designed to handle the imposed weights, and shall be placed per manufacturer's requirements.

Joint Material: All joints to be sealed using Ram-Nek joint sealer. Joint sealer to be provided in sufficient quantities by the vendor as part of the manhole section(s). Size shall be per manufacturer's recommendations.

G. MANHOLE CONNECTORS: At manholes, a water-tight resilient connection shall be made between the wall and the pipe. This shall be accomplished by use of an engineering approved manhole waterstop adaptor such as Indiana Seal Manhole Adaptor,

Kor-N-Seal, or approved equal, meeting the requirements of ASTM C-923. The connector must be compatible to both the type of pipe wall and manhole wall, and shall be installed in strict accordance with the recommendations of the connector manufacturer.

H. INSTALLATION: The manholes shall be constructed at the location shown on the plans or as directed by the Engineer and in accordance with the details shown on the plans and as specified herein. After the excavation has been completed, the concrete base or bottom shall be poured.

When the concrete has sufficiently set, the riser work may proceed. After the manhole rise has been completed, the invert shall be neatly formed in the bottom of the manhole with concrete. The invert shall have a true curve of as large a radius as the size of the manhole will permit and shall be given a smooth trowel finish.

The subgrade under pre-cast manhole bases shall be compacted to 95% density in accordance with ASTM D-1557. Compaction limits shall be one foot beyond the perimeter of the concrete base and shall be a minimum of one foot in depth.

Drop connections shall be constructed as shown on the drawings.

All manholes that are in ground water shall be externally coated with a bituminous coating such as Coal Tar Epoxy. Interior coating of manholes shall be required only when specified in the construction plans. The coating shall be an epoxy resin-type material such as Plascite 7122 or approved equal.

1.2 INSPECTION AND TESTING

A. SCOPE: Test all piping as specified herein unless authorized by the Engineer.

B. STANDARDS: Inspection and testing sewer lines and manholes shall adhere to requirements of the following:

ASTM C-828	Recommended Practice for Low-Pressure Air Test of Vitrified Clay Pipe Lines (4-12 Inches)
ASTM C-1103	Standard Practice for Joint Testing of Installed Pre-Cast Concrete Pipe Sewer Lines
ASTM D-3034	Specification for Type PSM Poly (Vinyl Chloride) (PVC) Sewer Pipe and Fittings
ASTM F-679	Specification for Poly (Vinyl Chloride) (PVC) Large-Diameter Plastic Gravity Sewer Pipe and Fittings
UNI-BELL-6	Standards and Practices for Low-Pressure Air Testing of Installed Sewer Pipe
UNI-BELL-9	Polyvinyl Chloride (PVC) Large Diameter Gravity Sewer Pipe and Fittings Based on Controlled Inside Diameter (Nominal Pipe Sizes 18-48 Inch)

C. MANUFACTURED PRODUCTS: Contractor shall provide all testing apparatus including pumps, compressors, hoses, gauges and fittings, mandrels, and other equipment necessary to perform the required tests.

D. TELEVISION INSPECTION: Prior to placing lines into operation, completed sewer lines shall be inspected by Utility personnel with a television camera as a condition of final acceptance of the installation. The Contractor shall thoroughly clean and flush all lines and notify the Utility Engineer that the line is ready for television inspection.

Any defects discovered in the pipe or construction methods shall be corrected by the contractor at no additional cost to the Owner. The Owner will pay for the initial TV inspection. Any additional inspection(s) required due to failure of the initial inspection shall be paid for by the Contractor.

E. LEAKAGE TESTING: General: To ensure the integrity of the pipe and joints, all sewer lines installed under these specifications shall be tested for leakage using the guidelines established by ASTM C-828 and UNI-BELL B6, and the methods and procedures here forth described.

Contractor shall provide all testing apparatus including pumps, compressors, hoses, gauges and fittings and other equipment necessary to perform the required tests. Acceptable equipment shall be as manufactured by Cherne Industries Incorporated or approved equal.

Unless otherwise approved, Contractor shall conduct tests in the presence of the Engineer. The Engineer shall be notified 48 hours in advance of testing. Test results shall be recorded on standard Utility forms, a copy of which is attached in Appendix Section E of these specifications.

Low pressure air testing may be conducted by the Contractor or an independent testing firm, acceptable to the Utility Engineer.

Sewer lines shall be tested after the "pipe zone" backfilling is completed, and prior to construction of finished surfacing. Where house laterals are included as integral part of the project, testing shall be performed on the main and laterals after the risers or laterals have been completed and backfilled.

Pipe shall be thoroughly cleaned prior to conducting leakage tests. Pipelines which exceed the allowable leakage rate shall be repaired and retested at the Contractor's expense.

All persons conducting an Air Test shall understand fully that an Air Test may be dangerous if conducted improperly.

Exfiltration Air Testing: A Low Pressure Air Test shall be the standard method for testing sewer lines.

Pneumatic plugs shall be sealed tested above ground using a random pipe section pressurized to 5 psig. Plugs should remain intact without bracing or movement out of the section.

Test shall proceed as follows:

Seal off each end of the section of pipe to be tested at a manhole connection. Securely brace test plugs.

Introduce air slowly into the test section through the test plug until an internal pressure of 4.0 psi is reached. Allow internal air temperature to stabilize. Adjust the internal air pressure to 3.5 psi, disconnect the air supply and begin the test.

The section shall maintain the test pressure without losing more than 1.0 psi for a length of time as determined by the following table. If the section being tested includes more than one size of pipe, the test time for each size shall be calculated and added to determine the total test time for the section.

Nominal Pipe Size (d), Inches	Time (t), Minutes/100 Ft.
4	0.3
6	0.7
8	1.2
10	1.5
12	1.8
15	2.1
18	2.4
21	3.0
24	3.6
30	4.8
36	6.0
42	7.3

Any section losing more than 1.0 psi shall be considered to have failed the test, and shall be repaired and re-tested prior to acceptance.

Infiltration Test: Infiltration testing of sewer lines under groundwater shall be mandatory. This test shall be performed prior to initiating any service connections and after backfilling. At testing time, the level of the groundwater shall be over the entire section of the pipe or near its maximum level.

The allowable infiltration for any portion of the sewer system shall be measured by a weir or current meter placed in the appropriate manhole and shall not exceed 50 gallons per inch of internal pipe diameter per mile per day, including manholes.

Suitable plugs or other facilities shall be provided by the Contractor in order to measure the amount of infiltration. If infiltration is excessive, the Contractor shall immediately proceed to locate the source of leakage. Once located, the source of leakage shall be sealed by grouting, cementing and rebuilding as required, or by methods approved by the Engineer.

Joint Testing: At the direction of the Engineer, individual joint testing of pipe larger than 24 inches in diameter shall be performed in accordance with ASTM C-1103 for special conditions not covered by other test methods.

Inspection of Sewer Manholes: Manholes installed under groundwater shall be visually inspected for infiltration leakage through all joints and the manhole base. All leaks or cracks shall be repaired with an approved hydro-cement grout.

F. DEFLECTION TESTING: General: As a condition for acceptance of the pipeline, a mandrel test (deflection test) shall be performed by the Contractor to verify the roundness and proper installation of the flexible pipeline.

Within 30 days, but not less than seven (7) days after the installation and backfilling of the flexible sewer line, including any service connections, the Contractor shall, in the presence of the Engineer, test deflection of the pipe with a mandrel (GO-NOGO device).

Mandrel Fabrication: Mandrels shall be of high quality fabrication and precision as commercially available by Cherne Industries Incorporated, or approved equal. Mandrels shall be approved by the Engineer and shall be equipped with proven rings and meet the following requirements:

1. Mandrel outside diameter (gauge dimension) shall be fabricated to the following specification:

   Mandrel O.D. = Pipeline Base I.D. - (% deflection limit x Pipeline Base I.D.) in accordance with ASTM D-3034, F-679, or UNI-BELL-9.

2. Mandrel Construction: The mandrel design shall be open thereby preventing debris buildup between channels of adjacent fins. The fin sets shall number at least (9) and be removable from the mandrel core. Gauges of various diameters shall be assembled by substituting fin sets of appropriate dimension. The length of the minimum radius portion of the mandrel shall not be less than one-third of the nominal diameter of the pipe being tested.

Execution: Prior to testing, the pipe shall be flushed and cleaned by the Contractor. Flow shall not be permitted in the pipeline throughout the duration of the deflection test.

The mandrel shall be manually pulled through the pipeline with a suitable rope or cable that is connected to an eyebolt at one end of the gauge. A similar rope or cable shall be attached to the eyebolt at the opposite end of the mandrel and tension shall be applied to it. This will ensure that the mandrel maintains its correct position during testing, while providing easy removal of the mandrel should it become lodged in an excessively deflected pipeline. Winching or other methods of forcing the mandrel through the pipeline shall be unacceptable.

Deflection of a pipeline deflection tested within thirty (30) days of installation shall have a deflection not exceeding 5% of the base inside pipe diameter as established by ASTM Standards D-3034 and F-679 listed in the following table:

Deflection Gauge Dimensions: SDR 35 or RSC 160

Nominal Size	Average I.D.	Base I.D.	5% Deflection Gauge
6"	5.893	5.742	5.46
8"	7.891	7.665	7.28
10"	9.864	9.563	9.08
12"	11.737	11.361	10.79
15"	14.374	13.898	13.20
18"	17.564	16.976	16.13
21"	20.707	20.004	19.00
24"	23.296	22.480	21.36
27"	26.258	25.327	24.06

Pipeline deflection tests performed thirty days (30) beyond the date of installation shall have a deflection not exceeding 7.5% of the nominal inside diameter or as established otherwise by the applicable governing body. Mandrel Gauge shall be adjusted for 7.5% and approved by the Engineer. The Contractor shall make every effort to test for deflection prior to the 30 day expiration.

A permanent record of all testing with locations where excessive pipeline deflections occur shall be kept by the Contractor and forwarded to the Engineer after completion of testing on each line.

The Contractor shall replace all sections of pipe which deflect more than 5% (or 7-1/2%). Pipelines with acceptable ovality shall be laid such that the larger diameter is situated in the vertical direction.

All expenses for re-trenching, backfill, compaction, paving, and related work necessary due to failure to satisfy deflection test requirements shall be borne by the Contractor.

END OF SECTION 333913

El PASO INTERNATIONAL AIRPORT
OUTBOUND BAGGAGE HANDLING SYSTEM REPLACEMENT
EL PASO, TEXAS

SECTION 34 77 16

SECTION PARTS

PART I - GENERAL SPECIFICATIONS

PART II - PRODUCT SPECIFICATIONS

PART III - EXECUTION SPECIFICATIONS

PART IV – QUALITY CONTROL SPECIFICATIONS

Copyright © 2016 BNP Associates, Inc.
All Rights Reserved

BNP ASSOCIATES, INC.

TABLE OF CONTENTS

SECTION	DESCRIPTION	PAGE NUMBER
PART 1		
1.01	RELATED DOCUMENTS	1
	A. General	1
	B. Drawings	1
	C. Existing Equipment Drawings	1
	D. Special Related Documents	2
1.02	SUMMARY	2
	A. General	2
	B. Scope of Work	2
	C. System Description	7
	D. New System Requirements	10
1.03	DEFINITIONS	12
	A. Abbreviations	12
	B. Authorized Representative	17
	C. General	17
1.04	BHS EQUIPMENT IDENTIFICATION	18
	A. General	19
	B. Equipment Identification	19
1.05	SUBMITTALS	19
	A. General	19
	B. Bid Phase Submissions	19
	C. Drawings Submitted for Review	20
	D. Submittal Deadlines	21
	E. Detailed Master Schedule	23
	F. Construction (Phasing) Schedule	24
	G. Structural Attachment Details	25
	H. Shop Drawings, Installation Drawings, and As-Built Documents	25
	I. Catalog Cuts and Equipment Specifications	30
	J. As-Built Submittal Documentation	31
	K. Operation and Maintenance Manuals	32
	L. Periodic Maintenance Inspection and Lubrication Chart	40
	M. Training Program	40
	N. Environmental Requirements	40
	O. List of Lubricants	40
	P. Inspection, Functional Specification and Testing Program	41
	Q. Test Reports	41
	R. Bag Tag Verification	41
	S. Certification of Installation Compliance	41
	T. Certification of Test Compliance	42
	U. Final Parts List	42
	V. System Power Requirements and MCP Sizes	42
	W. Estimated Spare Parts List	42
	X. System Reliability Calculations	42

Y. Monthly Status Reports ... 42
Z. Submittal Log ... 43
AA. Computer/Software/Hardware Inventory ... 44
BB. Computer Log ... 44
CC. Contractor Documentation for the Development of the SSTP by the TSA's representative ... 44
DD. TSA Closeout Documentation ... 45

1.06 CONTRACTOR'S QUALITY ASSURANCE GENERAL REQUIREMENTS ... 46
A. Laws, Codes, Rules and Regulations ... 46
B. BHS Contractor Qualifications ... 46
C. Non-Standard Equipment ... 46
D. Factory Acceptance Testing (FAT) ... 47
E. CBRA Workstation ... 47

1.07 PROJECT CONDITIONS ... 47
A. General ... 48
B. Installation Conditions ... 48
C. Phasing Sequence ... 48
D. Ramp Area Proximity ... 48
E. Lay-down Area Restrictions ... 48
F. Restoration of Service Costs ... 48
G. Right-of-Ways ... 49

1.08 PROTECTION OF THE WORK ... 49
A. General ... 49

1.09 SYSTEM DESIGN AND PERFORMANCE REQUIREMENTS ... 49
A. General ... 49
B. Material and Equipment Approvals ... 50
C. Request for Deviations from Drawings or Specifications ... 50
D. Baggage Conveyors ... 50
E. System Processing Rates ... 51
F. Baggage Characteristics ... 52
G. Physical Constraints ... 53
H. Vibration ... 54
I. Balancing ... 54
J. Service Conditions ... 54
K. System Safety ... 55
L. Personnel Safety ... 56
M. Noise Levels ... 56
N. Radio Frequency Interference/ Electro Magnetic Interference (RFI/EMI) ... 58
O. Maintainability, Life & Reliability ... 58
P. Standard/Interchangeable Components ... 58
Q. Lifespan ... 59
R. System Reliability ... 59
S. Parts Availability ... 61

1.10 STANDARDS AND CONSTRUCTION CODES ... 61
A. General ... 61
B. Construction Codes ... 61

1.11 WARRANTIES ... 63
A. General Warranty ... 63
B. Warranty Exclusion ... 64

C. Warranty Limitation 64
D. Technical Support 64
E. Royalties and License Fees 64
F. Labor Warranty 64
G. Parts Warranty 64
H. Design Warranty 65

PART II

2.02 ACCEPTABLE MANUFACTURERS 67
A. BHS Contractors 67
B. BHS Equipment Subcontractors 67
C. BHS Controls Subcontractors 67
D. BHS Equipment 67

2.03 MATERIALS 72
A. General 72
B. Material 73

2.04 FABRICATION 73
A. General 73

2.05 BELT CONVEYORS 73
A. Belting 73
B. Belt Splicing 74
C. Pulleys 74
D. Drive Assemblies 78
E. Flexible Couplings 81
F. Intermediate Sections 82
G. Floor Supports 82
H. Overhead Supports 82
I. Safety Guards 83
J. Side Guards 84
K. Break-Overs 85
L. Bearings 86
M. Hardware 86
N. Straight Belt Conveyor 86
O. Ticket Counter Take-Away Conveyors 86
P. CBRA Load and Unload Conveyors 86
Q. Power Turns 87
R. Spiral Turns 87
S. Queue Conveyors 88
T. 45° Merge Conveyors 88
U. Vertical Sorter Conveyors 89

2.06 FLAT PLATE MAKE UP DEVICES 89
A. General 89
B. Dimensions 90
C. Load Rating 90
D. Operating Speeds 90
E. Drives 90
F. Flight Assemblies 91
G. Frame and Pallet Support System 91
H. Finish and Trim 91

2.07 EXPLOSIVE DETECTION SYSTEM - L3 Communications eXaminer 3DX 6700 92
A. TSA Equipment Responsibility 92
B. BHS Contractor Responsibility 92
C. General 93

2.08 MISCELLANEOUS MECHANICAL EQUIPMENT 93
A. Catwalks 93
B. Toeboards 94
C. Stairs 94
D. Handrails 95
E. Maintenance Ladder 95
F. Fire Door (Powered) 97
G. Security Door (Powered) 98
H. Chutes and Slides 99
I. Counterweight Slide (Tip Chute) 99
J. Non Powered Portable Gravity Roller Bed Conveyor 100
K. Draft Curtains 100
L. Conveyor Impact Protection 100
M. Bollard 101
N. High Speed Paddle Diverter (HSPD) 101

2.09 SPECIAL MECHANICAL EQUIPMENT REQUIREMENTS 102
A. General 102
B. Baggage Over-height Restriction Bars 102
C. EDS Spare Parts Overhead Hoists 102
D. Stationary Plow Diverters 103

2.10 ELECTRICAL TECHNICAL REQUIREMENTS 103
A. Electrical Service to be Provided by the BHS Contractor 103
B. Raceways 104
C. Wire and Cable 107
D. Grounding 109
E. Support 109
F. Boxes 109

2.11 ELECTRICAL COMPONENTS 109
A. Wiring Devices 109
B. Control Devices/Stations 109
C. Electrical Device Identification 116

2.12 MOTOR CONTROL PANELS (MCP) 119
A. General 119
B. Installation Requirements 120
C. Panel Identification 121
D. Shop Drawings 121
E. Utility Outlet 121
F. Lighting 121
G. Control Devices 122
H. System Status – MCP's 123

2.13 BHS WORKSTATION AND COMPUTER CABINETS 126
A. General Design Requirements 126
B. Standards 126
C. Modular Pre-Engineering Construction 126

D. Self Supporting Skeleton Framework 127
E. Mounting Hardware 127
F. Instructions 127
G. Installation Requirements 127
H. Panel Identification 127
I. Shop Drawings 128
J. Receptacles 128
K. Utility Outlet 128
L. Lighting 128
M. Cooling Fans 128

2.14 CONTROL SYSTEM DESIGN 128
A. General Design Requirements 128
B. Computer and PLC Control System Architecture 136
C. Reservation Network Interface Functional Description. 146
D. FIDS Computer Functional Description: 146
E. EDS Security Screening Devices 147
F. Building Maintenance System (BMS) 147
G. Building Fire System 147
H. Programmable Logic Controller (PLC) Functional Description 147
I. Baggage Tracking Verification 149
J. Automatic Tag Reader Array (ATR) 149
K. Scan Gun 151
L. Coded Baggage Tags 152
M. Baggage Source Message (BSM) Data and Format 153
N. Network 157
O. Maintenance Diagnostic System (MDS) 160
P. Maintenance Information System (MIS) 168
Q. Baggage Control Room Equipment 184
R. Satellite Workstation 185
S. Security 185
T. Software Design Requirements 187
U. Software Confidentiality 188
V. Source Code 188

PART III

3.01 PREPARATION 189
A. General 189

3.02 WORKMANSHIP 189
A. General 189

3.03 FABRICATION & INSTALLATION SPECIAL CONSIDERATIONS 190
A. General 190

3.04 DELIVERY, STORAGE, HANDLING AND ON-SITE RESPONSIBILITIES 190
A. Delivery, Storage, Handling 190
B. On-Site responsibilities 191

3.05 INSTALLATION 193
A. General 193
B. Tolerances 193
C. Side Guards 194

D. Belt Splicing/Lacing 194
E. Belting 195
F. Belt Tracking 195
G. Floor Supports 195
H. Overhead Supports 195
I. Anchoring 196
J. Lubrication 196
K. Motor Installation 197
L. Jacking Bolt Installation 197
M. Sheave/Sprocket Alignment 197
N. Fasteners 197
O. Shaft Mounted Components 197
P. Painting and Finishing 197
Q. Maintenance Ladder Drop Zone Striping 200
R. Safety Signage 200
S. Welding 201
T. Maintenance Access 202

3.06 SPECIAL CONTROL REQUIREMENTS 202
A. Control Stations 202
B. Photocell Functions 203
C. Motor Overloads 209
D. Jam Indication/Restart 210
E. Start-Up Warning 210
F. Alarm Silence 210
G. Emergency Stop Pushbuttons 211
H. Control Stop/Start Crossover Control Stations 212
I. Security/Fire Door 212
J. Fault Warning Alarm 214
K. High Speed Paddle Diverter 214
L. Motor Safety Disconnect (MSD) 215
M. Breakaway End Cap Safety Guard Interlock 215
N. Interlocks 215
O. E-Stop Lanyards (ESL) 216
P. Swing Down Ladder Advisory/Warning Beacon 216
Q. Vertical Sorter Conveyors 216

3.07 ELECTRICAL & CONTROLS SPECIAL CONSIDERATIONS 217
A. Power Source 217
B. Emergency Power 217
C. Outbound System input conveyor "Manual Start" Sequence 218
D. CBRA Re-Input Line, CBRA clear line, and Outbound Transfer Line "Manual Start" Sequence 218
E. System Ready Indication 219
F. Make-up Control Stations 219

3.08 BHS DETAILED CONTROL DESCRIPTIONS/REQUIREMENTS 219
A. General Design Requirements 219
B. Temporary BHS Conditions 220
C. Ticket Counter Subsystems 221
D. Curbside Subsystems 224
E. Security Shunt Line (SS1) Subsystems 225
F. EDS Security Screening System 226
G. CBRA Re-Input Line RI1 Subsystem 239
H. Outbound Oversize Line OS1 Subsystem 241
I. Clear Line Subsystems CL1 245

J. Sortation Line Subsystem SL1 250
K. Sortation Controller Operational Provisions 251

3.09 SPECIAL CONTROLS CONSIDERATIONS 252
A. Laptop Computers 252

3.10 CONSTRUCTION PHASING SEQUENCE 252
A. General 252

3.11 DEMOLITION/EQUIPMENT REMOVAL 256
A. Maintain Operations 256
B. Conduit Removal 256
C. Support Steel Removal 256

3.12 SALVAGED EQUIPMENT TO BE STORED 256
A. General 257
B. Equipment Salvage 257
C. Equipment Storage 257

3.13 DEMOLISHED MATERIALS TO BE DISPOSED 257
A. General 257
B. Equipment Disposal 257

3.14 REMOVED AND RELOCATED EQUIPMENT 257
A. General 257

3.15 OPERATION AND MAINTENANCE TRAINING 258
A. General 258
B. Operational Training 259
C. TSA Training 260
D. Maintenance Training 260
E. Supplemental Training 262

PART IV

4.01 FIELD QUALITY CONTROL 263
A. Quality Control Manual 263
B. Quality Assurance 263
C. Quality Assurance Representative 263
D. Configuration Management Plan 263
E. Safety Program Manual 264
F. Project Management Team 265
G. Project Management Office 266
H. Workmanship 266
I. Pre-Installation Meeting 266
J. Pre-Demolition Meeting 267
K. Work Activities Bulletin 267
L. Field Quality Control Services 268
M. Approval to Proceed 268
N. Preparatory Inspection 268
O. Initial Inspection 268
P. Follow-Up Inspection 269
Q. Inspection Results 269

4.02 TESTING AND ACCEPTANCE 269
A. Inspection and Testing Procedures 269
B. Conditional Acceptance 278
C. Conditional Acceptance With Defects 279
D. Delayed Conditional Acceptance With Defects List 280
E. Final Acceptance 280

BNP ASSOCIATES, INC.

SECTION 34 77 16

BAGGAGE HANDLING SYSTEM

PART I - GENERAL SPECIFICATIONS

1.01 RELATED DOCUMENTS

A. General

1. These written Specifications, in conjunction with the accompanying Contract Drawings, constitute the Contract Documents for the Project. If there are any discrepancies between these written Specifications and the Contract Drawings, the more stringent requirement shall apply as interpreted by the City of El Paso or its representative.

2. As indicated throughout these contract documents (drawings and specifications) the BHS is considered a security system for In-Line baggage screening in the Project. Implement and demonstrate to the City of El Paso, the TSA and their representatives the installed BHS and In-Line CBIS in compliance with all the TSA's security protocols, BHS/EDS integration and all associated Performance and Commissioning requirements, as specified herein and consistent with the TSA's Planning Guidelines and Design Standards for CBIS, specifically Appendices D1 (Design Performance Requirements) and D2 (Commissioning and Evaluation Requirements).

3. These Contract Documents are confidential and are not to be distributed or copied, in part or in whole, without the written consent of an authorized representative of the City of El Paso or BNP Associates, Inc. All documentation that is associated with the operation/functionality of the CBIS, documents generated by the Contractor and documents relating to SAT, Pre-TRR, TRR and ISAT are Security Sensitive Information (SSI). Control/manage and mark these documents as SSI, in accordance with 49 CFR Parts 15 and 1520. Ensure that all related documentation pertaining to the following is marked as SSI (similar to the footer of this specification):

   a. System detection and decision logic and associated software.

   b. Methodology of CBIS use, bag screening/clearing procedures and alarm resolution.

   c. Threat images and descriptions, which are associated with and shall be interfaced between the BHS and EDS.

   d. Performance data from screening systems, including the testing of the screening systems.

B. Drawings

1. Specification Drawings (Ref. Drawing B0.02 for listing), Architectural Drawings, Communications/Network Layout Drawings, Fire Protection System Drawings, MEP (Mechanical, Electrical and Plumbing) Drawings, Structural Drawings, Overall Program Phasing Plans, Addendum, Contract Provisions, Special Provisions and Supplementary Provisions apply to the work of this Section.

2. The Architectural, MEP and Structural drawings that have been prepared under a separate package, define the facility modifications that will be performed to accommodate the Baggage Handling System alterations. These drawings shall be used for bidding purposes and preparation of design/engineering documents.

3. Assume responsibility to request and obtain architectural drawings, MEP (Mechanical, Electrical and Plumbing) drawings, Structural drawings and Project Phasing Plans applicable to the BHS from the City of El Paso or its representative.

C. Existing Equipment Drawings

1. Information regarding existing conveyor equipment designated for modification or to remain (such as but not limited to electrical as-built drawings, O&M Manuals, computer and PLC architecture, source codes and other relative documentation relating to the existing BHS, and layout drawings/documents) shall be obtained from the City of El Paso or its representative. Contact the City of El Paso and request the necessary

documents that would be required for coordination and reference purposes, between the existing system(s) and the proposed BHS modifications for the implementation of the In-Line EDS. If As-built documentation is not available, engage the necessary staff to obtain the needed information on the existing systems and equipment via site survey.

D. Special Related Documents

1. Division 01 – General Requirements
2. Division 26 – Electrical Requirements
3. EDS Supplier Reference Document – L3 Communications eXaminer 3DX 6700 Interface Specification.
4. Battelle Checked Baggage Inspection Systems Performance and Commissioning Requirements
5. Planning Guidelines and Design Standards (PGDS) for Checked Baggage Inspection Systems, Version 5.0, dated July, 2015
6. Additional special documents such as FIDS interface doc, CUTE/IMUSE documents.
7. Contact the appropriate firm or supplier to request the necessary documents that would be required for coordination, testing, interface and reference purposes.

1.02 SUMMARY

A. General

1. Section 14520 34 77 16 of the Project Specifications is divided into four (4) parts as follows:
   a. Part I specifies general administrative, performance, and procedural requirements for the BHS installation as specified herein and in the accompanying drawings.
   b. Part II specifies product information including CBIS/BHS Manufacturers and Integrators, BHS Equipment suppliers, materials to be used on this project along with control system design and approved equipment requirements.
   c. Part III specifies execution requirements for the CBIS/BHS installation, modifications, demolition that are required for this project.
   d. Part IV specifies minimum field Quality Control that shall be maintained and performed by the BHS Contractor for this project, including required system acceptance inspections and testing.
2. The BHS Specification (14520 34 77 16) and accompanying BHS/CBIS Contract Drawings are intended to outline the work, define functional requirements and establish minimum standards of quality for the Project. Meet all local, state and federal laws, codes and safety standards and assure a safe and efficient system for all personnel who operate, maintain or have access to the completed baggage handling system.
3. The laws of the City of El Paso, the State of Texas, and the United States of America (USA) shall apply and govern the Contract.
4. Unless otherwise specified, all references to sums of money shall be in United States Dollars (USD), the currency of the United States of America (USA).

B. Scope of Work

1. Provide the design, engineering, fabrication, transportation to/from the site, installation, temporary BHS conditions (e.g., Interim Conveyor ROWs), removal, salvage, demolition, modifications, testing and turning over in working order the BHS and In-Line CBIS described herein, in compliance with these written Specifications and the accompanying drawings
2. Provide a complete, operable, maintainable and safe system on a "turnkey basis", including all supports, header steel (unless otherwise specified), hangers, anchors, framing, trim, electrical power to the BHS systems from the sources indicated on the accompanying Contract Drawing Package (i.e., from BHS PDPs to MCPs and associated BHS field components), motors, motor starters, disconnects, controls, pushbuttons,

conduit, wiring, cabinets, computers, switches / routers / firewalls, printers, hand held scan guns, CBRA bag tag printers, disconnects, controls, pushbuttons, conduit, wiring, fire/security doors, (including the associated conveyor's belting with low coefficient of friction), ATRs, cabinets, interim and permanent power distribution panels (of modular design and reduced height as required), EDS spare parts hoists (including associated conductor bar system), catwalks, ladders, stairs, free standing rolling stairs, crossovers (including Control Stop/Start control stations at all BHS area crossovers) and all other components, whether specifically shown and described, or implied in the plans and specifications or wherever required to effectively accomplish the intended functions of the BHS. In all cases where a device or part of the equipment is herein referred to in the singular number, it is intended that such reference shall apply to as many such devices as are required to satisfactorily complete the installation. Determine the source of control power.

3. Provide all labor, materials, and equipment required for implementing the BHS as defined by these specifications, including but not limited to installation, all required acceptance testing (including required support and participation for the TSA's SAT, Pre-TRR, TRR and ISAT, to include the test bag set referenced in these documents), all necessary wiring between BHS components, necessary protection of conveyor equipment that is under construction, modifications, materials, new conveyor equipment with all related components, provision of new BHS PLCs, PLC Networks, and other applicable components/devices and modifications to existing BHS Computer Systems, BHS PLCs and PLC Networks, all as required, for implementing the new In-Line EDS defined by these specifications.

4. Coordinate with the TSA's Contractor for the site planning of the BHS and CBIS Sequenced Implementation, required BHS and CBIS installation and testing (i.e., SAT, Pre-TRR, TRR and ISAT) and all interface requirements between the CBIS equipment (i.e., EDS Level 1 machines, CBIS positive bag tracking functionality, CBIS Level 1 and 2 Decision points and Level 3 CBRA interface requirements) and the BHS for all of the conveyor lines as they relate to this Project. Coordinate and assist the TSA's EDS supplier and rigger with the actual placement of the EDS machines. Coordination and assistance regarding the actual placement of the EDS machines within each baggage basement shall include, but not be limited to, the markings and exact location (e.g., centerline markings) of each EDS machine as it relates to its respective conveyor line and the maneuvering of the removable conveyors as necessary to clear the right-of-way for the rigging and installation of the EDS machines. In order to successfully accomplish the intended operation described herein, the details of all required interface(s) between the BHS and EDS machines shall be fully coordinated with the EDS supplier.

5. Provide the interconnection of all BHS related PLC and ControlNet or Ethernet based connections from the BHS to the EDS machines that are required to accommodate the interfaces between the two systems (hard-wired I/O, data interface cabling and software driven). Coordinate the details of all required communication and signal interfaces (e.g., EDS machine status and control, bag loading and unloading, and bag status), between the EDS machines and the BHS with the EDS equipment supplier and the City of El Paso in order to successfully accomplish the intended operation described herein. Details of the available signals and data, along with the required cabling between the two systems, are typically covered in the EDS supplier's Integration Guide for the respective EDS machine(s). The Contractor shall request for a copy of the EDS Supplier's Integration requirements through the City of El Paso. Provide all necessary control cabling, along with the communication and signal interfaces, between the EDS equipment and the BHS consistent with the EDS supplier's requirements. Furthermore, provide an additional 30% of cabling conductors between the EDS equipment and the BHS, as coordinated with the EDS Supplier and the City of El Paso, to accommodate future functions.

6. Submit implementation schedules and associated phasing plan documentation with the operating and maintenance documentation to the City of El Paso or its representative, including required manuals, equipment parts lists and shop drawings - all in strict accordance with the specifications and applicable drawings, and subject to the terms and conditions of the Contract.

7. Provide all hardware, software, and construction supervision to insure that the BHS equipment operates on a fully integrated "Turnkey" basis.

8. The Contract Drawings are intended to generally outline the conveyor system configuration and function desired. Pertinent building dimensions are noted along with some specified conveyor dimensions and elevations. An attempt has been made to present approximate conveyor length and right-of-ways, but these

shall necessarily be determined by review and inspection of building construction drawings and verified by actual field measurements by the BHS Contractor prior to preparing shop and erection drawings. An attempt has also been made to present the number, size and locations of the BHS Power Distribution Panels (PDPs) and Motor Control Panels (MCPs); verify the final number of panels with related cabinet sizes and locations based on their electrical shop drawings within 90 days of contract award.

9. Coordinate the BHS and In-Line CBIS with the MEP drawings (e.g., ductwork, sprinkler system, facility electrical and plumbing right-of-ways) and architectural detail drawings to fully coordinate the BHS alterations and In-Line CBIS with all the other systems that will be installed in the same area of the facility spaces. The BHS Alterations/In-Line CBIS installation and MEP/Architectural coordination process shall include composite coordination drawings between the BHS, architectural and MEP systems to resolve any interference issues, consistent with the specified requirements of Division 01, Section 01 31 00 (Project Management and Coordination). This coordination process shall also include the responsibility to coordinate the BHS conveyor right-of-ways, related conduit/wireway runs, and maintenance catwalk design with other systems, including the sprinkler system design, to permit the installation of the sprinkler pipes below the new and existing modified catwalks or areas where they are projecting below adjacent conveyors. The coordination between the design of other systems and the BHS equipment (conveyor segments, related conduits/wireways and catwalks) shall ensure other systems do not interfere with the BHS operation or related maintenance access and baggage flow right-of-ways. Sprinkler system lines or other MEP equipment shall not be supported off the BHS equipment or its supporting structure (i.e., BHS overhead or floor supports). The coordination shall ensure the required interface between the BHS equipment and the adjoining architectural building elements. Preserve all mechanical and electrical right of ways for all deferred equipment depicted on the Contract Drawings.

10. Identify all building interface requirements necessary to install the BHS over and above those shown on the contract drawings in the bid documents. Verify as-built conditions and notify the City of El Paso or its representative of conflicts. Any additional building modifications or alterations not so identified in the contract bid shall be borne by the BHS Contractor.

11. All upgrades and modifications to the existing systems and construction of all the new equipment and components of the system(s) shall be in accordance with all codes and standards and local laws and regulations, applicable to the design and construction of this type of equipment, which are generally accepted and used as good practice throughout the industry, i.e., NFPA, Underwriters Laboratories, OSHA, SAE publications, National Electrical Code (NEC), American National Standards. Design all parts and sub-assemblies in accordance with good commercial practice and assure safe, efficient and practical design in keeping with requirements peculiar to this type of system. All equipment shall be in imperial dimensions.

12. Submit to the City of El Paso or its representative any request for information, clarification of specification, and variance from the specifications as a Request For Information (RFI).

13. Obtain and pay for all permits, inspection fees, and certificates relative to all phases of BHS construction.

14. Be responsible for all employee badges as required by the Airport Authority for this project. The City of El Paso shall not provide escort services for employees on the ATO and AOA side of the facility.

15. Submit all structural attachment detail/computations and electrical drawings signed and sealed by a Professional Engineer licensed in the jurisdiction where this project is located.

16. Provide any and all temporary power and lighting that may be required for and during the course of the installation and testing of the BHS.

17. Cooperate and coordinate with the City of El Paso and their Architect for the location of all Mechanical, Plumbing, Electrical, Right-of-Ways and access/egress between the BHS catwalks and the building to confirm the final number and locations of the BHS associated stairs/ladders, conveyor maintenance crossovers, maintenance catwalks, and all other BHS catwalks and ladders over and above those shown on the contract drawings.

18. Cooperate with the Architect and other contractors for coordination of the building fire zones to confirm the number and location of the BHS associated fire/security doors and number of conveyors, which require

emergency power.

19. Perform a complete mechanical and electrical field survey of the existing BHS conveyor equipment and maintain consistency with the existing conveyor components, in terms of motors, gearboxes, bearing, belting, field control components and MCP control components to simplify spare parts inventory.

20. Develop detailed sequencing plans for each subsystem designated for modification after discussions and coordination with the Construction Manager to determine the availability of the respective Baggage Handling System Area. Some of the existing conveyor lines that are in operational use must be reconfigured according to the phasing plan to allow airlines continued use of the Main Terminal BHS while modifications are ongoing. Due to the complexity of the task, extensive coordination is required to avoid schedule conflicts or interruption of airline schedules. In some cases, new equipment may be installed with no impact to the existing system. In other cases, existing systems must be reconfigured first to provide right-of-ways for the new EDS/BHS systems. The BHS Contractor at no additional cost shall perform these tasks.

21. The structural requirements of this project are critical given the structural design of the City of El Paso's Main Terminal Bagroom. All BHS components that require overhead support shall utilize structural steel. No attachment to the upper level deck will be allowed**.** The Structural Attachment submission to the Construction Manager will be carefully scrutinized and evaluated. All temporary conveyor support structures for the BHS including but not limited to columns, beams, and header steel shall be provided by the BHS Contractor and shall be coordinated with the Construction Manager, the overall project implementation schedules, and airline's operational schedules.

22. Temporarily take down existing supports and re-support existing conveyor line segments with associated conduits, junction boxes, control stations, and other electrical and control components as required to accommodate the planned relocation, reconfiguration, and demolition that is required as part of the overall construction/installation sequenced plan. This includes but is not limited to the areas that are illustrated on drawing numbers B6.01, B6.02, B6.03, B6.10, B6.20, B6.30 and B6.40 detailing the terminal BHS.

23. All temporary and final conveyor equipment supports shall be designed, engineered and installed so as not to infringe on the airport and the City of El Paso's operational areas, drive aisles or cart staging areas.

24. Coordinate and adequately protect the conveyor equipment from the Mechanical, Electrical and Plumbing (MEP) modifications, as well as other related building service modifications and alterations. Ensure that adequate protection is provided around the conveyor segments (new and existing/modified) wherever the Facility and Utility modifications are occurring. Ensure that the construction of the expansion around the conveyors and the protection that shall be provided around the conveyor segments allows for the uninterrupted and continued operation of the baggage handling systems in all cases.

25. After installation of the BHS, demonstrate its operating capability. Accomplish prior to the start of the Systems Acceptance Testing all "debugging" and internal testing. In addition, carry out a "dry test run" of all Acceptance Tests prior to conducting such tests with the City of El Paso or its representative to ensure that tests conducted with the City of El Paso or its representative are successful. Submit to the City of El Paso on a daily basis any and all records of internal testing and debugging (with corrective action) performed prior to Acceptance Testing.

26. Coordinate with all relative on-site disciplines/contractors, including the TSA's Master Systems Integrator, for all required interfaces to the BHS. Coordinate and work closely with the TSA's EDS provider and the City of El Paso's Security Representative for all BHS integration testing, including but not limited to providing the necessary support/participation/test baggage and system demonstrations for the TSA's mandated certification testing, such as the Pre-TRR, the TRR and ISAT. Accomplish, prior to the start of the System's Acceptance Testing, the Pre-TRR and TRR, all "debugging" and internal testing. In addition, carry out a "dry test run" of all Acceptance Tests and Pre-TRR prior to conducting such tests with the City of El Paso and the TSA or their representatives, to ensure that tests conducted with the TSA and the City of El Paso or their representatives are successful. Submit to the City of El Paso or its representative on daily basis any and all records of internal testing and debugging (with corrective action) performed prior to Acceptance Testing.

27. Upon completion of the BHS installation, all related programming and internal testing/debugging,

demonstrate the system's operating capability to the City of El Paso and its representatives for acceptance and for Pre- TRR to confirm compliance with the specified requirements. Provide all labor and test material as specified elsewhere in this document, including service technicians and test material handlers for the BHS Acceptance Testing, the Pre- TRR and TRR period. These test demonstrations shall be carried out per the following requirements, as part of the base contract:

a. Prepare BHS Test Plans in compliance with the specified requirements of Part 4 (Testing and Acceptance) as well as the specified requirements of the TSA's Planning Guidelines and Design Standards (PGDS) document, specifically Appendix D, Commissioning and Evaluation requirements.

b. The Site Specific Test Plans (SSTP) for the CBIS performance and commissioning requirements, which will be prepared by the TSA's representative (Battelle) and shall be followed by the BHS Contractor in order to pass the Integrated Site Acceptance Test (ISAT). Meet with the City of El Paso, the TSA and their representative, at the Airport or other location as requested by the City of El Paso, to review the SSTP and obtain a copy from the City of El Paso, for use in the upcoming test procedures that are outlined below, to ensure the completed CBIS meets all the protocols and requirements contained within, prior to the TSA ISAT(s).

   1.) Pre-TRR - All Pre-TRR testing (and retesting of failed tests) shall be carried out by the BHS Contractor, and witnessed by the City of El Paso, local TSA and their representatives, using the BHS approved test plans – per Part 4 (Testing and Acceptance) of this specification, as well as the requirements of the PGDS - and the SSTP to certify that the CBIS satisfactorily passed per the pass/fail requirements of the test plans and is ready for a TRR by the TSA's OST representative. All testing data and related Pre-TRR documentation that results from these tests, when passed, will be distributed by the City of El Paso to the TSA's OST representative, for review and approval, along with a request for a TRR.

   2.) TRR - Upon successful completion of the above referenced local acceptance testing and Pre-TRR, the TSA's OST representative will be invited by the City of El Paso to witness a TRR, which shall be demonstrated by the BHS Contractor. The tests that will be performed during this period will be selected (from previous SSTPs that were performed during the Pre-TRR) by the TSA's OST representative and those tests shall be demonstrated by the BHS Contractor, under the direction of the TSA's OST representative.

   3.) ISAT - Upon successful completion of the TRR to the TSA's OST representative, a TRR report will be issued by the TSA's OST to the TSA or their representative and the City of El Paso, the City of El Paso will submit a letter of concurrence to the TSA regarding successful TRR demonstration, to schedule the TSA or their representative's on-site visit for the ISAT. It is anticipated that the TSA or their representative will provide test personnel and testing material (bags) for the ISAT. However, provide the necessary manpower/labor and material, as necessary, similar to previous tests performed with the City of El Paso and local TSA, to support the TSA or their representative in performing the mandated Integrated System Acceptance Test (ISAT) for the CBIS

28. It is not mandatory to visit the project site prior to bidding; however, the date of the pre-bid will be advertised with the solicitation and the prospective bidder(s) are expected to be thoroughly acquainted with the scope of work and installation restrictions directly associated with the existing area of the facility. If requested, the prospective bidder(s) may coordinate a pre-bid walk-through with the City of El Paso or its representative. The following requirements associated with the existing BHS modifications should be reviewed and surveyed during this site visit.

    a. Existing Conveyor line modifications/reconfigurations.

    b. BHS computer system modifications for report functionality changes (located in the BHS control room).

    c. Maintenance Diagnostics System modifications, located in the BHS Control Room.

    d. PLC system Modification requirements (e.g., centralized in the BHS Control Room).

    e. TSA Security System requirements such as staffing locations, support rooms, monitoring systems, and

other TSA requirements, which may impact the new BHS equipment installation as well as modifications to the existing system.

C. System Description

1. The Baggage Handling System (BHS) to be provided is illustrated on the accompanying Drawing Package (Ref. Drawing Number B0.02 for a complete listing of drawings).

2. The proposed the Outbound Baggage Handling System Replacement for El Paso International Airport is as follows:

3. Current Terminal Equipment and Operations

   a. The EPIA Checked Baggage Inspection System is a "decentralized" stand-alone EDS CBIS configuration. The EPIA BHS consists of six (6) Ticketing counter input belts. These subsystems are approximately 25 to 30 years old. The subsystems transport bags to close proximity of where the stand-alone CT-80DR's Reveal machines are located, adjacent to the airline baggage make-up devices where bags are manually removed from the transport conveyors by TSA and then fed into the CT-80DR for screening.

   b. Machine-alarmed bags are removed for further inspection by TSA personnel. Clear bags are also manually removed from the CT-80DR and placed onto various types of sortation devices for manual baggage make-up by the individual carriers. The existing CBIS consists of four (4) CT-80DR machines.

   c. The current system was installed and commissioned in 2007 / 2008. This screening system is very labor intensive, and does not meet the TSA's latest published Planning Guidelines and Design Standards (PGDS) V5.0 due to ergonomic inadequacies (e.g. no lifting, pinch points, etc.). Due to the openness of the baggage make-up areas, the EDS machines are exposed to detrimental environmental conditions / elements, such as windblown sand and heat during the summer season, which ultimately impact uptime reliability. When equipment outages occur the EDS machines require onsite technical service that can last over 5 hours. These outages require labor intensive contingency screening operations undesirable to the airport, airlines, operations and maintenance staff.

4. Design Overview

   a. This centralized CBIS configuration remains the most effective method for providing security screening in the future for this multi-carrier terminal. It will provide 20 plus years of operational and passenger experience advantages, including travel times that easily meet TSA criteria and airline customer service expectations. The system is not overly complicated and has a limited tracking area that simplifies bag sortation.

   b. Additionally, it is a cost effective solution for the airport and TSA as it has fewer conveyors and associated maintenance requirements. The centralized CBRA and oversize screening provide TSA staffing efficiencies and contingency operations. OSR activities will remain local to the terminal and a new BHS control room will provide system monitoring controlling and allow dispatch of personnel during system outages.

   c. The design utilizes three (3) L3 6700 machines and can handle 100% of the projected 2023 baggage screening demand. Ten (10) ETD Operators are required to process baggage demand based on the revised ETD throughput per TSA – this includes oversize and out-of-gauge bags.

   d. The bag room design includes four (4) new flat plate devices and took into account the current Peak Presentation Requirements of thirty-five (35) Carts/Containers.

5. System Overview

   a. The majority of the conveyor and the entire CBIS portion of the outbound BHS are located on the apron level of the EPIA Terminal. The outbound BHS is comprised of a single centralized CBIS with a closely located CBRA to ensure minimal baggage jam and lost in tracking occurrences that lead to manual screening demands for the TSA. The CBIS and CBRA feed an adjacent make-up area containing an Automated Tag Reader for reacquiring bag tag data for sortation.

b. This project is slated to install three (3) L3 6700 machines with an associated CBRA that will receive non-cleared bags from the machines. The design also includes an out-of-gauge line that directly conveys unscreened bags not capable of being screened through an ISD because of size requirements into the CBRA. The CBIS also has a reinsertion line connected to the alarm line used to transport BHS unknown bags back onto the conveyor collector belt upstream of the pre-CBIS ATR feeding the EDS machines. Level 1 clear lines from the EDS machines merge together and convey bags to the make-up devices. Both the OSR clear line and the clear line out of the CBRA merge onto the EDS clear line prior to the sort area ATR. An oversize line for the CBIS is installed to allow transport of oversize bags from the ticket counter area to the CBRA and after bags have been cleared they are placed on a slide that transfers them into the new make-up area.

c. The new outbound baggage handling system includes five (5) new ticket counter lines with numerous ticketing positions and one (1) curbside line for baggage input into the system. Four of the five ticket counters (TC1-TC4) will be replaced with new equipment and provide baggage input conveyors for the four primary airlines at EPIA. The other ticket counter (TC5) will primarily serve as an alternative input location for large military or baseball flights. It may also be used as a fifth ticket counter input/location for potential future carriers. The clear mainline from the EDS machines conveys bags to four (4) flat plate make-up devices.

6. System Operation Overview

a. The proposed design is a self-contained system where bags are inputted into system, transported to the CBIS, screened and then finally transported to a designated make-up device. The following are the operational details for a bag as it traverses through the system.

b. Bags are placed on a ticket counter or curbside line with associated IATA bag tags attached and are then transported to the CBIS. After the ticket counter control stations are activated and a start pushbutton pressed the conveyors will start up and bags will go through a fire/security door and then travel on a collector belt before passing through an ATR and Baggage Measurement Array (BMA) prior to entering the CBIS area. At the pre-CBIS ATR each bag tag ID is captured and transferred to the new control system, and the bag dimensions are measured. If a bag is determined to not to be a standard size (not capable of being screened by the EDS machine) it will immediately be diverted to a dedicated out-of-gauge line that connects to the alarm line feeding the CBRA for Level 3 screening. Bags determined to be a standard size (Capable of being screened by the EDS machine) will proceed to be diverted to a security feed line for Level 1 screening.

c. Positive bag tracking throughout the CBIS will begin as bags pass through the ATR and enter the CBIS. The system will follow the TSA's IRD standards, the BHS will transfer bag tag IDs and pseudo IDs to the EDS prior to the entrance to each machine for tracking purposes as well as associating images with bags. At the exit of the machine this information will be returned to the BHS with the appropriate information from the EDS system.

d. After the bags exit the machine they are conveyed to the first decision point vertical sort device where machine cleared bags are diverted to the cleared bag line and all other bags are diverted t the alarm line. The Level 1 screening clear bags are conveyed directly to the make-up area for sortation. The remainder of the bags (non-cleared) are conveyed for a minimum of 45 seconds OSR review time to the second decision point vertical sorter for Level 2 screening. The bags cleared by OSR are then diverted to the line merging onto the sort mainline to the make-up area. All other bags are sent to the CBRA for Level 3 processing.

e. Located within the CBRA is a single Baggage Status Displays (BSDs) which is the primary interface between the TSO and the BHS. It displays specific baggage information and allows the TSO to take action on a given bag. The Baggage Inspection Table (BIT) BSD is used to associate a bag ID with the EDS image on the Secondary Viewing Station (SVS).

f. All bags sent to the CBRA with known images will be manually processed using directed search techniques. If a bag enters the CBRA as an EDS unknown, the TSA has the option to advance the bag onto the reinsertion line connected to the last alarm line queue so it can be merged back onto to the ticket counter collector belt upstream of the CBIS, but prior to the pre-CBIS ATR for re-screening.

g. Out-of-gauge bags are manually processed without an associated image. Cleared bags are placed on the CBRA clear line and conveyed to the sort area. Any threat bag(s) are dealt with by the designated Law Enforcement Officer (LEO) group.

h. Whenever a bag is encountered at an outbound sortation scanner array the BHS will attempt to determine a single sort destination by means of the following processes. The primary method for sorting bags will be to look up the BSM in sort controller and in the event that the BSM is found in the sort controller BSM table, then the system shall attempt to look up flight and sort destination information from the flight table on the sort controller. The secondary method for sorting bags will also use the IATA 10 digit license plate to look up the carrier code for those carriers assigned to one and only one make-up unit and sort the bag to its indicated destination.

i. Large or odd-size bags from the ticket counters will be transported by a new oversize conveyor to the CBRA for manual processed by TSA personnel. After being screened in the CBRA these bags are cleared they are placed on a slide that dumps these bags to the ramp level make-up area for pickup and routing to the aircraft by the airlines. Phasing Overview

7. Phasing Overview

a. Construction phasing will occur in four (4) distinct phases:

1.) Phase 1: Install Temporary Conveyor for screening and bag make-up

a.) Install temporary make-up device

b.) Install transport conveyor to feed temporary make-up device

c.) Modify existing claim device and associated space to process unscreened bags for temporary screening operation

d.) Install new/relocate existing EDS to temporary centralized screening location

2.) Phase 2: Install CBIS Conveyor

a.) Demo all conveyors north of gridline B

b.) Install all conveyor downstream of EDS

c.) Deliver and Install EDS machines

d.) Install conveyor upstream of EDS machines

3.) Phase 3: Install Sortation Conveyor

a.) Install Sort Mainline

b.) Install sort ATR

c.) Install four flat plate make-up units and associated make-up feed conveyors

d.) Install BHS control room

4.) Phase 4: Install ticket counters and curbsides: includes sub-phases to demo and install the new ticket counters and curbsides in the ATO

a.) Install and test new TC5

b.) Demo, install and test new TC4

c.) Demo, install and test new CS4

d.) Demo, install and test new TC3

e.) Demo, install and test new TC2

f.) Demo, install and test new TC1

b. The new work for the terminal also includes the installation of a new computer-based sort control and system monitoring and reporting system. The new control, monitoring and reporting system will be brought online at the same time the new CBIS and outbound sort system become operational. It will be operational to sort bags for the airlines and will be updated to include the ticketing portions of the system as they come online during the final phases of the project.

c. The temporary EDS screening and make-up operation shall remain in operation until construction phasing is completed and the system has successfully completed its 30-day run-in period for TSA.

D. New System Requirements

1. Provision of all new conveyors with related components (primary inputs and outputs to/from the three (3) Level 1 EDS machines).

2. Provision of High Speed Paddle Diverters for sortation, load balancing and redundancy on the EDS input lines, subsequent decision points and ETD/EDS recirculation lines.

3. Provision for the transport and rigging of three (3) EDS machines to their permanent location, for Level 1 screening of Outbound bags, with associated input / output conveyors and all required interfaces between the BHS and EDS. The uncrating, leveling, calibration and final installation of the EDS machines in their permanent locations is NIC.

4. Integration of the EDS machines (L-3 eXaminer 3DX 6700) - Level 1 (quantity of 3) into the system configuration.

5. Transport conveyors between Level 1 and Level 3 (including all necessary bag tracking, sortation and Level 2 interface requirements).

6. Conveyors as required for transport of alarmed bags from the Level 2 processing conveyor lines to the Level 3 ETD area.

7. Conveyors between the Level 3 ETD inspection area (staffed by TSA) to provide return transport of cleared bags to the sortation system and make-up device(s).

8. Conveyor line(s), from the Level 3 ETD inspection area (staffed by TSA) to Level 1 machines, to provide re-input capability of untracked/unknown bags to the OT1 Outbound Transport Line EDS machines.

9. Conveyors locally equipped with 4" high sideguards at locations upstream and downstream of the EDS machines to assist TSA personnel in performing "OTK" (formally known as – IQTK) Test Bag Testing of the EDS machines. Conveyors required to have this type of sideguard are indicated in the contract drawings. Coordinate input sideguard locations with control station layouts, crossovers, to devise the best possible location of these sideguards by providing a "mock-up" of the first EDS installation for review and approval.

10. New electrical components shall be provided on the conveyor sections located at the input/output ends of the EDS machines with "quick-disconnect" type connections to aid in the removal of conveyor segments/components in the event of EDS machine replacement. Conveyors required to have this type of equipment shall also be provided with caster wheels on the respective conveyor's floor support legs, to assist in the removal/maneuvering of the conveyors segments; these conveyor segments are indicated in the contract drawings.

11. Maintain consistency with the control devices, control stations and related functionality (e.g., E-stop, Jam Detection/Reset and the like) as the existing conditions of the BHS.

12. New control systems shall be provided, including MCPs, PLCs (e.g., MDS, Sort Controllers and MIS database servers), as required, to accommodate the specified functionality.

13. The MDS and MIS shall include new equipment and as required to satisfy the specified requirements for the sortation, reporting and maintenance diagnostics upgrades.

14. Provide additional components, equipment and systems as required and specified to fulfill the scope of work as described herein.

15. Fire/Security Doors

    a. Provide, install and integrate all BHS fire/security doors (new and existing) as illustrated on the contract drawings. Also, provide and install all draft curtains at the new fire/security door locations.

16. BHS Draft Curtains

    a. Provide and install draft curtains at all locations where conveyor lines pass through wall and floor opening, consistent with the specified requirements of Part 2 and the details that are illustrated in the accompanying drawing package.

17. Maintenance Catwalks

    a. Provide and install all BHS related maintenance catwalks, ladders, stairs and cross-overs as illustrated in the contract drawings.

18. EDS Spare Parts Overhead Hoists

    a. Provide the design and installation of an electric operated overhead hoist mechanism at six (6) separate locations, between the EDS machines, as illustrated in the contract documents and specified in Part 2 of this specification.

    b. Provide 480 VAC power to the hoists from the power sources provided under Division XX with a conductor bar system (Conductix-Wampfler Insul-8 system or approved equal) which will allow the hoist a full range of motion across the length of the hoist beams.

19. Rolling Stairs

    a. In order to provide maintenance service access to the Level 1 decision points and other conveyors without catwalks, provide a total of 5 rolling stairs (McMaster – Carr Part number 8103T49 or approved equal) for use by the TSA and the City of El Paso's maintenance group during the system conditional acceptance period and after final completion. Each rolling stair shall be used for operational / maintenance and TSA failsafe fault access only, not for the Contractor's implementation of BHS and In-Line CBIS equipment. These ladders shall become part of the City of El Paso's equipment upon project completion. Submit a line item for cost each rolling stair. Provide all catalog cuts for review prior to the delivery to the site and installation of the rolling stairs. Ensure the equipment is turned over in working order with all applicable warranties and complies with the specified load requirements for maintenance catwalks.

20. New In-Line EDS and ETD Equipment Installation

    a. Transport the TSA's EDS equipment from the construction site truck dock or storage facility to the locations illustrated on the contract documents. The units shall be located in an In-Line configuration with the BHS conveyor equipment. The transportation of the EDS units (i.e., L-3 Communications 3DX 6700) between the truck dock or storage facility and their final location on the new mezzanine within the SBB shall be coordinated with the City of El Paso and the TSA. This scope shall be performed under close coordination and "Supervision" with the supplier's (i.e., L-3 Communications) recommendations and assistance in all aspects of this work, including rigging of each EDS unit. Uncrating, leveling and calibration of each unit will be performed on site by the TSA's supplier, to confirm the delivered condition of each unit. The location of these units shall be in compliance with all applicable regulations/requirements of the TSA and the respective supplier (i.e., L-3 Communications).

    b. It shall be the TSA's responsibility to obtain certification upon completion of this work for all the new, modified and relocated EDS units.

    c. Coordinate with the TSA's Contractor the site planning, Phased Implementation, required testing (i.e., SAT and ISAT) and all interface requirements between the security screening equipment (i.e., EDS Level 1 machines, Level 2 workstations and ETD stations) and the BHS for all of the conveyor lines as they relate to this project.

    d. The new EDS and ETD equipment, which will be provided by the TSA, shall be installed (e.g., EDS internal system wiring, networking and related controls) at their permanent location by the TSA's

contractor per the SBB Security Alterations Program Phased Implementation Plan.

21. TSA Satellite MDS Station

    a. In addition to the existing centralized redundant MDS modifications, referenced above, provide a new satellite MDS station and associated printer for the TSA to monitor the Outbound BHS functions only. This satellite station shall be located within the TSA's EDS Level 2 screening area, adjacent to the supervisor's workstation, and shall function similar to the two maintenance diagnostics computers referenced above, which are located in the BHS Control Room. This Satellite Computer shall serve as a third Maintenance Diagnostics Computer and shall be connected to the main BHS Computer Workstation via an Ethernet connection, which shall be provided and installed as part of the scope for this project.

    b. The satellite MDS station for the TSA shall display all graphics, alarms, alarm text and any messages that are associated with the new outbound BHS subsystems, including the In-Line EDS equipment.

    c. The satellite MDS controls functionality shall be identical to graphics and text displays, including the zoom-in capability.

    d. The satellite MDS workstation shall not be capable of any modifications to the sort system, flight schedules, make-up assignments and HSPDs controls.

    e. The satellite MDS workstation shall provide read access to the daily alarm logs. This access shall also allow the user to save the alarm log data to a CSV (Comma Separated Variable) file onto a CD/DVD and Hard Drive in the remote workstation.

    f. The method of connection between the centralized MDS, which is located in the BHS Control Room and the new satellite MDS workstation in the TSA's EDS Level-2 Workstation Area shall be such that the remote MDS station shall be operational at all times the existing modified centralized MDS is operational.

    g. The satellite MDS station shall consist of, as a minimum, a redundant PC with 24" monitors and appropriate Graphics Card, CD-RW/DVD+RW120 GB Hard Drive, 1024 MB RAM, with its own line printer, an audible Alarm similar to the MDS with both an alarm silence and a means to Enable/disable this feature. Provide all software to support the functions associated with the use as a satellite MDS. Additionally, provide and install a single copy of Microsoft Excel.

    h. The satellite MDS workstation shall be password protected, similar to the centralized MDS and require login to perform any functions other than view the display (i.e., anything to do with the alarm logs).

1.03 DEFINITIONS

A. Abbreviations

1. ACS shall mean Access Control System
2. AL shall mean Alarm Line
3. ANS shall mean American National Standards
4. ANSI shall mean American National Standards Institute
5. ASCII shall mean American Standard Code for Information Interchange
6. AT shall mean Advanced Technology X-Ray Machine
7. AOA shall mean Airport Operations Area
8. ATO shall mean Airline Ticket Office
9. ATR shall mean Automatic Tag Reader combination baggage measurement array
10. BAIT shall mean Bag Auto-ID Transfer
11. BCR shall mean Baggage Control Room

12. BIDS shall mean Bags Information Display System
13. BHS shall mean Baggage Handling System
14. BIT shall mean Baggage Inspection Table
15. BMS shall mean Building Management System
16. BNP shall mean BNP Associates, Inc., the Baggage Handling System Consultant/Engineer.
17. BMTT shall mean Bag Maximum Travel Time
18. BPM shall mean Baggage Processing Message
19. BRP shall mean Baggage Removal Point
20. BSD shall mean Bag Status Display
21. BSM shall mean Baggage Source Message. Message sent from airline computer system to BHS computers.
22. BSO shall mean Baggage Service Office
23. BTM shall mean Baggage Transfer Message
24. BUM shall mean Baggage Unload Message
25. BVS shall mean Baggage Viewing Stations.
26. CB shall mean Clear Bag
27. CBRA shall mean Checked Baggage Resolution Area and shall be synonymous with the terms Resolution Room, Baggage Inspection Room and ETD Area.
28. CBS shall mean Checked Baggage Screening
29. CBIS shall mean Checked Baggage Inspection System
30. CEMA shall mean Conveyor Equipment Manufacturers Association
31. CM shall mean Construction Manager
32. COF shall mean Coefficient of Friction
33. CT shall mean Computed Tomogaphy
34. CTX shall mean Computer Tomography Examiner
35. CUTE shall mean Common User Terminal Equipment
36. DCH shall mean Data Communication Highway. Communication line between PLCs, peripheral devices and computer systems.
37. EBS shall mean Early Bag Storage
38. EDS Shall mean Explosive Detection System (Computer Tomography)
39. EIA shall mean Electronic Industry Association
40. EPROM shall mean Erasable Programmable Read Only Memory
41. EOD shall mean Explosives Ordinance Disposal
42. ETD shall mean Explosive Trace Detection
43. FAA shall mean Federal Aviation Administration
44. FAT shall mean Factory Acceptance Test
45. FD shall mean Fire Door(s)

46. FIDS shall mean Flight Information Display System
47. FIS shall mean Federal Inspection Service
48. FLA shall mean Full Load Ampacity or Full Load Amperes
49. FPM shall mean Feet Per Minute
50. FSD shall mean Fire/Security Door
51. GC shall mean General Contractor - a firm or person other than the BHS Contractor who shall enter or has entered into a Contract with the City of El Paso and who shall be identified by the Construction Manager for work at the Airport relating to this contract
52. GOVT shall mean Guaranteed Operator View Time
53. GSE shall mean Ground Service Equipment
54. HBS shall mean Hold Bag Screening
55. HDD shall mean Hard Disk Drive
56. HMI shall mean Human Machine Interface.
57. Hot Back-up shall mean that in the event of a failure of the primary component (e.g. PLC, sortation computer or other redundant component) the hot back up component shall retain the latest current status of the related system (i.e. tracking information) and shall assume full operation automatically. Hot back up of components shall provide bumpless and seamless transfer of information. All tracking sortation of baggage shall continue without interruption
58. HSPD shall mean High Speed Paddle Diverter
59. HVAC shall mean Heating, Ventilating and Air Conditioning
60. IATA shall mean International Airline Transportation Association
61. ID shall mean Identification
62. IEC shall mean International Electromechanical Commission
63. I/O Module shall mean Input/Output Module
64. ISAT shall mean Integrated System Acceptance Test – A full bank of tests detailed in the TSA's Site Specific Test Plan; testing will be conducted by the TSA's testing representative and shall be supported by the BHS Contractor.
65. IT shall mean Information Technology
66. MMAI shall mean Mijares Mora Architects Inc., Architects of record.
67. LAN shall mean Local Area Network
68. EPIA shall mean El Paso International Airport.
69. LCD shall mean Liquid Crystal Display
70. LED shall mean Light Emitting Diode
71. LEO shall mean Law Enforcement Officer who is typically part of the local bomb disposal unit
72. MCP shall mean Motor Control Panel. The MCP contains the electrical control and power circuit devices for the control of the baggage system(s).
73. MDS shall mean Maintenance Diagnostics System
74. ME shall mean Manual Encoding

75. MEC shall mean Manual Encoding Console used to manually enter baggage data into the BHS sortation computer, and shall include a hand-held scanner gun at each station
76. MEP shall mean Mechanical, Electrical and Plumbing System
77. MIS shall mean Maintenance Information System
78. MTBF shall mean - Mean Time Between Failures
79. NEC shall mean National Electrical Code
80. NEMA shall mean National Electrical Manufacturers' Association
81. NFPA shall mean National Fire Protection Association
82. NIC shall mean Not In Contract
83. NRT shall mean Near Real Time
84. NTP shall mean Notice-to-Proceed.
85. O & M shall mean Operations and Maintenance
86. OEM shall mean Original Equipment Manufacturer
87. OOG shall mean Out-of-gauge
88. ORT shall mean Operational Readiness Test (for relocated EDS Equipment)
89. OSARP shall mean On-Screen Resolution Protocol
90. OSC shall mean the TSA's Office of Security Capabilities
91. OSHA shall mean Occupational Safety and Health Administration
92. OS shall mean Oversize or Oversize
93. OSR shall mean On-Screen Resolution
94. OTK shall mean Operational Test Kit (Formally known as - IQ)
95. ELP shall mean City of El Paso
96. PAX shall mean Passenger
97. PCI shall mean Passive Control Interface
98. PDP shall mean Power Distribution Panel or Point. Designated location(s) to provide power for the BHS.
99. PE shall mean Professional Engineer
100. PGDS shall mean Planning Guidelines and Design Standards for Checked Baggage Inspection Systems, as prepared by the TSA.
101. PLC shall mean Programmable Logic Controller, a microprocessor which controls BHS operations.
102. PM shall mean Project or Program Manager
103. PSI shall mean Pounds per Square Inch
104. Pre-TRR shall mean pre-Test Readiness Review – shall be performed by the Contractor in conjunction and in coordination with the City of El Paso and local TSA representatives to demonstrate that the system meets all of the requirements of the TSA's CBIS performance and commissioning requirements, per the TSA's PGDS, as well as the intent of the TSA's Site Specific Test Plan (SSTP) prior to the performance of the TRR testing
105. PTRI shall mean Passive Threat Resolution Interface
106. RF shall mean Radio Frequency

107. RFI shall mean Request For Information

108. ROW shall mean Right of Way

109. RSEDS shall mean Reduced Size EDS

110. RT shall mean Real Time

111. SAC shall mean sortation allocation computer (i.e., Sort Controllers)

112. SAT shall mean Site Acceptance Testing , required for each EDS – will be performed on each EDS machine by the EDS supplier and the TSA's testing contractor, prior to integration to verify detection

113. SB shall mean Suspect Bag

114. SD shall mean Security Door(s)

115. SF shall mean Security Feed

116. SFS shall mean Secure Flight Selectee

117. SIDA shall mean Security Identification Area

118. SSI shall mean Security Sensitive Information

119. SSTP shall mean Site Specific Test Plan, prepared by the TSA's representative

120. SVS shall mean Secondary Viewing Station

121. TCU shall mean Threat Containment Unit

122. TOB shall mean Top of Belt

123. TRI shall mean Threat Resolution Interface

124. TRT shall mean Threat Resolution Tools

125. TRR shall mean Test Readiness Review – shall be performed by the BHS Contractor in conjunction and in coordination with the Airport's Security, the TSA's OST and local TSA representatives to demonstrate that the system meets all of the requirements of the TSA CBIS performance and commissioning requirements, per the TSA's PGDS, as well as the intent of the TSA's Site Specific Test Plan (SSTP).

126. TSA shall mean Transportation Security Administration

127. TSO shall mean Transportation Security Officer (Baggage Screener)

128. UL shall mean Underwriters Laboratories

129. UPS shall mean Uninterrupted Power Supply

130. USS shall mean Uniform Symbology Specification

131. User Airline shall mean those airlines that use the Baggage Handling System(s) related to this contract

132. VCR shall mean Video Cassette Recorder

133. VFD shall mean Variable Frequency Drive

134. VOM shall mean Volt Ohm Meter

135. VSC shall mean Vertical Sort Conveyor

136. VSU shall mean Vertical Sorter Unit

137. VMC shall mean Vertical Merge Conveyor

138. VMU shall mean Vertical Merge Unit

139. WAN shall mean Wide Area Network

140. Warm Back-up shall mean that in the event of a primary component failure (e.g. PLC) the warm back up has to be manually switched to become the primary component.

B. Authorized Representative

1. The City of El Paso may designate by written notice to the BHS Contractor or by provision elsewhere in this Contract one or more persons, firms or corporation to act as its Authorized Representative in connection with the administration of this Contract. Except as otherwise provided in such written notice or elsewhere herein, such Authorized Representative shall have the authority to act for the City of El Paso with respect to the performance of this Contract by the BHS Contractor with the objective of achieving full compliance by the BHS Contractor of the terms and provisions of the Contract.

2. Accept and comply with instructions from such Authorized Representative as though such instructions had been given by the City of El Paso and the BHS Contractor shall deal directly with such Authorized Representative in all matters arising under this Contract, including but not limited to matters involving Contract interpretation, disputes and arbitration procedures. However, such Authorized Representative is authorized to act in connection with this Contract solely as the representative of the City of El Paso and not as principal hereunder.

C. General

1. Baggage Handling System (BHS) shall mean all components, installation materials, interfaces and other components, all necessary hardware, software, installation coordination and construction supervision of computers/PLC, controls and control hardware and software, management and support services required to implement the work and supply a fully functioning system as described by the Contract Documents.

2. Baggage Handling System Contractor shall be synonymous with Equipment Contractor, Equipment Supplier, Baggage Contractor, BHS Contractor, Supplier and Contractor and shall mean the firm or company that is responsible for the design, engineering, manufacture, modification and installation of the conveyor equipment and systems required to implement the work and supply a fully functioning system as described by the Contract Documents.

3. In these written Specifications and on the Contract Drawings (unless inconsistent with the content or subject matter or unless a contrary intention otherwise appears) the following clarifications/definitions shall apply:

   a. As Built shall encompass all elements of the term As Executed.

   b. Bill of Quantities shall mean a document named therein as a Bill of Quantities issued to bidders by or on behalf of the City of El Paso, stating quantities of work to be carried out.

   c. Completion shall mean:

      1.) That stage of the execution of the Work under the Contract when the Works are completed and all other things, which are required by the Contract to be performed by the Contractor before completion, have been performed and accepted.

      2.) Where contract or specifications provide a period of time for completion, the last day of the period.

      3.) However, if the City of El Paso grants an extension of time for completion, it means the date resulting from the extension of time.

   d. Contract means this Deed of Agreement between the City of El Paso and the Contractor for the performance of the Works, together with all schedules, attachments, annexure and other documents incorporated into this Contract.

   e. Construction Manager shall mean a firm or person or such other manager as may be appointed by the City of El Paso for the purpose of managing the Contract and, in so far as it concerns the functions exercisable by the Construction Manager, includes his nominated representatives.

   f. Contract Sum means:

      1.) Where the City of El Paso accepted a lump sum, the lump sum.

2.) Where the City of El Paso accepted rates, the sum ascertained by adding the products of the rates and the corresponding quantities in the Schedule of Rates.

3.) Where the City of El Paso accepted a lump sum and rates, the aggregate of the sums referred to in paragraphs 1 and 2 above.

g. Date for Completion shall mean:

1.) Where contract provides a date for completion that date.

2.) Where contract or specifications provide a period of time for completion, the last day of the period.

3.) However, if the City of El Paso grants an extension of time for completion, it means the date resulting from the extension of time.

4.) The date certified by the City of El Paso in a Certificate of Completion to be the date upon which the Works have reached completion.

h. Day means a calendar day.

i. Diversion Point shall mean the point at which a bag will either be routed into the BHS for final sortation or routed to the next level of security screening for further processing.

j. Other Contractor or Other shall mean a firm or person other than the BHS Contractor who shall enter or has entered into a Contract with the City of El Paso.

k. Outbound Baggage Handling Replacement Project shall mean the construction of the terminal BHS project at the El Paso International Airport, as described in these written Specifications and on the Contract Drawings.

l. Schedule of Rates shall mean any schedule included in the Contract, which, in respect of any section or item of work to be carried out, shows the rate or respective rates of payment for execution of that work, and which may also include provisional items, provisional sums, quantities and prices. The schedules of rates are fixed sums for the duration of the Contract with the City of El Paso.

m. Site means the lands and other places made available or to be made available to the Contractor by the City of El Paso for the purpose of the Contract.

n. Specifications means the Specification for the Works included in the Contract and any modification of such Specification thereafter.

o. Subsystem shall mean a set conveyor segments and its related field elements (e.g., control stations, consoles, scanners, and the like), which is a system itself, and a part of the whole system

p. Temporary Work shall mean any work required in the execution of the Contract but not forming part of the Works.

q. The Contract Drawings shall mean the drawings referred to in these written Specifications or The Contract; the City of El Paso may from time to time supply modifications/revisions of such drawings and other drawings to the Contractor for the purposes of the Contract.

r. The Works shall mean the whole of the work to be executed in accordance with the Contract, including variations provided for by the Contract.

s. Words importing the singular include plural and words importing the plural include the singular.

t. Words importing persons include a partnership and a body corporate.

u. Words importing the masculine gender include the feminine and neuter genders.

v. Work Under The Contract shall mean any work the BHS Contractor is or may be required to execute under the Contract and includes variations, remedial work and Temporary Work.

1.04 BHS EQUIPMENT IDENTIFICATION

A. General

1. The item numbering system and format used for physical identification of new and modified conveyors and associated equipment and in all documentation shall be consistent with the subsystem identification detailed on the contract documents. The equipment shall be numbered in consecutive order.

2. Re-number existing components designated to remain, as needed, to maintain sequential numbering of each existing line that shall be modified to accommodate the newly installed or temporary/interim conveyor segments.

B. Equipment Identification

1. The item numbering system and format used for physical identification of conveyors and associated equipment and in all documentation shall be the same as that indicated on the Contract Drawings. The equipment in each subsystem shall be numbered in consecutive order.

2. The following is a listing of the subsystem abbreviations utilized in the contract drawings:

a. AL means Alarm Line subsystem(s)

b. CB means Clear Bag subsystem(s)

c. CL means Clear Line subsystem(s)

d. ED means Explosive Device subsystem(s)

e. ML means Mainline subsystem(s)

f. OG means Out-of-Gauge subsystem(s)

g. OS means Oversize or Oversize subsystem(s)

h. OSR means OSR Line subsystem(s)

i. RL means Re-Insert Line subsystem(s)

j. SB means Suspect Bag subsystem(s)

k. SF means Security Feed Mainline subsystem(s)

l. SS means Security Shunt / Shunt Exit subsystem(s)

m. SSM means Shunt Feed subsystem(s)

n. TC means Ticket Counter subsystem(s)

1.05 SUBMITTALS

A. General

1. All submittals shall be in accordance with the Conditions of the Contract.

2. Submit the following documentation at the time specified during the course of the work, and in accordance with the following Submittal Deadlines.

3. Prepare all documents in the English language.

B. Bid Phase Submissions

1. The BHS Contractor is deemed to have studied the system design and requirements presented in the drawings and specification respectively and accepted the design and requirements as suitable and appropriate to safely accomplish the functions and processes described herein. Identify in the bid phase submission any design aspect or specification requirement that is believed to be inappropriate or inadequate and shall propose alternate solutions to alleviate the perceived problem but shall, in all cases, include in the bid submittal pricing for the base system presented in the drawings. Any alternate designs developed must meet or exceed the design criteria as listed in the specifications.

2. The lump sum bid shall include the following:
   a. System Price Schedule
   b. Unit Price Schedule
   c. Type and duration of the proposed training program if different to the minimum requirements as listed in Part III of these contract documents
   d. A line item for the cost to purchase items from the Estimated Spare parts list as detailed in the contract documents
   e. Identification of any special environmental requirements more stringent than what is shown in the Specifications (if any).
   f. Identification of proposed BHC backup method such as Marathon.
   g. Notification of any perceived safety hazard with specified design of system or its components which shall be submitted on and addressed during bid phase though addendum.
   h. Notification if an adjustment is required to the Contractor's Submittal Deadlines which shall be submitted on and addressed during bid phase through addendum.
   i. Proposed equipment of non-standard design and equipment substitutions which shall be submitted on and addressed during bid phase through addendum.
   j. Define the technical support to be provided during testing, conditional acceptance phase and after Final Acceptance has been granted.
   k. Project schedule outline for the phased-in implementation of the BHS (indicate number of weeks for completion of work after NTP)
   l. Related project list references (indicate client, location of project, type of work, year performed/completed and overall cost).
   m. A listing of staff with resumes and qualifications that shall be working on the project. Indicate project manager's name, names and number of programmers, technicians, instructors/ training personnel, and all other required information. Include on-site and off-site participating staff and the percent of anticipated participation on this project. In addition, provide training instructors professional qualifications. The City of El Paso reserves the right to approve or reject key personnel from the list.
   n. A line item for the cost of additional onsite training
   o. A line item cost for the price of (1) laptop computer, fully loaded/configured with all applicable software programs to interface with the Baggage Dimensioning Device and ATR Scanner Arrays for collection and processing of individual scanner head results, as they relate to their respective device. The laptop computers shall also include all applicable PLC program ladder logic required to maintain the BHS system
   p. A line item cost for all BHS related acceptance testing including all required ISAT, SAT or ORT testing. This should clearly identify the types and quantities of required testing material as well as manpower.
   q. A line item cost for any EDS Equipment maneuvering
   r. A line item cost for any additional onsite support should it be required after final acceptance (if applicable).

C. Drawings Submitted for Review

1. Submit for review two (2)-half size copies and an electronic copy of each shop and installation drawing (e.g. PDF format submitted on CDROM, DVDROM or USB Flash Drive). These shop submittals shall not include any hand written markups / drawings.
2. The City of El Paso or its representative shall review the drawings and return them for revision and re-

submittal within 21 days, where re-submittals are required. Revise and re-submit drawings for final review by the City of El Paso or its representative within 14 days. Any corrections or changes indicated on Shop Drawings shall not be considered as an extra work order. Do not start fabrication until receipt of the City of El Paso or its representative's approval.

3. The comments from the City of El Paso or its representative shall not be taken to imply that the arrangement has been checked in detail. The BHS Contractor shall be fully responsible for the suitability, adequacy, integrity, durability and practicality of the arrangement or assembly, components and systems as set out in the drawings, specifications and other information submitted for acceptance by the City of El Paso or its representative including all subsequent amendments. In no case shall the City of El Paso's or its representative's review or comments relieve the Contractor in any way of his responsibility of ensuring that the equipment supplied complies with all specification and functions in accord with the wording and the intent of the applicable Specifications.

4. Do not submit drawings, which are not in full compliance with the specifications unless a Request for Variance (RFV) requesting a variance from the specifications accompanies the submittal. In this case the City of El Paso or its representative and the TSA representative will endeavor to respond within 21 days, but shall be under no obligation to do so.

5. Approved shop drawings shall be at the site at all times for use in the construction of the work. Failure to supply such drawings will be deemed sufficient cause to delay the work until such drawings are available for field use and reference.

6. Submit a drawing log that contains a complete list of all anticipated installation and shop drawings and submit an updated copy with each drawing submission.

D. Submittal Deadlines

1. Listed below are the submittals and dates referred to in the applicable sections. (Indicate in the proposal submission if an adjustment to these dates is required (days indicated are working days)).

Submittal Item	Deadline
Safety Program Manual	10 days after NTP
Project Management Team	10 days after NTP
Quality Control Manual	20 days after NTP
Configuration Management Plan	30 days after NTP
Detailed Master Schedule	30 days after NTP
Phasing Schedule	30 days after NTP
Structural Attachment Details	30 days after NTP
Environmental Requirements	30 days after NTP
Catalog Cuts and Equipment Specifications	20 days after NTP
System Power Requirements and MCP Sizes	30 days after NTP
BHS Equipment - Combined Heat Output Figures	90 days after NTP
Emergency Stop Zone Drawings	60 days after NTP
Controls System Description and BHS Redundancy Schematic Diagrams	90 days after NTP
Control Room Equipment & City of El Paso Finishes	90 days after NTP
Shop Detail Drawings	60 days prior to fabrication
Motor Schedule	60 days prior to fabrication
Installation Drawings	60 days prior to fabrication
Revise & Re-issue Drawing Period	21 days

City of El Paso Re-review Period	14 days
Training Program	90 days prior to turn-over of BHS equipment for beneficial use of respective BHS Sequence (Phase)
Estimated Parts List	90 days prior to turn-over of BHS equipment for beneficial use of respective BHS Sequence (Phase)
Functional Specification Site Specific Test Plan (SSTP) Checklist	180 days prior to Pre-Test Readiness Review / Tests
Inspection and Test Program	120 days prior to Pre-Test Readiness Review / Tests
Factory Acceptance Test Plan	40 days prior to Factory Acceptance Test Date
Factory Acceptance Test	20 days prior to installation on site
Final Parts List	30 days prior to turn-over of BHS equipment for beneficial use of respective BHS Sequence (Phase)
Bag Tag Verification	60 days after NTP
Work Activities Bulletin	14 days prior to each activity
Test Reports	15 days after completion of testing for the of respective BHS Sequence (Phase)
Certificate of Testing Compliance	
System Reliability Calculations	30 days after completion of testing for the of respective BHS Sequence (Phase)
Certificate of Installation Compliance	15 days after completion of installation
Contractor Documentation for the development of the SSTP by the TSA's representative	180 days prior to Pre-Test Readiness Review / Tests
As-Built Drawings	30 days after acceptance of for the of respective BHS Sequence (Phase)
List of Lubricants	60 days prior to turn-over of BHS equipment for beneficial use of respective BHS Sequence (Phase)
O & M Manual – Draft for City of El Paso Review	60 days prior to turn-over of BHS equipment for beneficial use of respective BHS Sequence (Phase)
O&M Manual Revisions (For an Existing BHS)	60 days prior to turn-over of BHS equipment for beneficial use of respective BHS Sequence (Phase)
Periodic Maintenance Inspection and Lubrication Chart	60 days prior to turn-over of BHS equipment for beneficial use of respective BHS Sequence (Phase)
O & M Manual – Final	15 days prior to turn-over of BHS equipment for beneficial use of respective BHS Sequence (Phase)
Monthly/ Report	Last day of each month
Submittal Log	With each submittal or as required by the project.

Computer/Software/Hardware Inventory	At Conditional Acceptance / Updated as required at Final Acceptance
Computer Log	To be kept during Conditional Acceptance period and officially submitted at Final Acceptance
TSA Closeout Documents	After "30 day Run-in period" has been completed

E. Detailed Master Schedule

1. Submit a detailed Master Schedule as specified below for review and approval by the City of El Paso or its representative before commencing with any work. Display schedule in graphic form, large and spacious enough to be updated directly on the original submittal during the course of the project. Show the principal dates and commensurate activity times for each entry. Include in the schedule:

   a. Beginning and ending of mechanical, electrical and controls/computer engineering for each subsystem or construction phase.

   b. Drawing submittal and approval.

   c. Long lead item order placement and expected delivery date.

   d. Beginning and ending of fabrication per subsystem or construction phase.

   e. On-dock plant to on-site transportation.

   f. Beginning and ending of demolition, removal or alterations work per each subsystem or construction phase.

   g. Beginning and ending of mechanical, electrical and controls/computer installation per subsystem or construction phase.

   h. Factory Acceptance Test dates

   i. Milestone dates for completion of pertinent facility interfaces (e.g., permanent system power).

   j. Date(s) EDS Equipment rigging to be completed by TSA's Contractor.

   k. Date(s) In-Line L3 Communications eXaminer 3DX 6700 device(s) installation and SAT needs to be completed by the TSA's Contractor

   l. City of El Paso witnessed Factory Acceptance Testing (FAT) date(s)

   m. EDS/BHS integration test plan

   n. In-line EDS system SAT or ORT dates

   o. Contractor's internal specification conformance acceptance test dates

   p. In-line Pre-TRR dates

   q. In-line EDS TRR dates

   r. In-line EDS system ISAT dates

   s. Equipment item test.

   t. Training and test plan submittals.

   u. Dates of training for TSA and O&M personnel.

   v. Submittal of operation and maintenance manuals.

   w. Operation and maintenance training periods.

x. Submittal of manufacturer's recommended spare parts list.

y. Acceptance inspections, testing/commissioning by subsystem.

z. System acceptance testing by subsystem or sequence.

aa. Operational dates by subsystem or construction phase or sequence.

bb. 30-day CBIS run-in period

cc. Punch list rectification.

dd. Final acceptance testing.

ee. Submittal of As-Built documentation.

2. Maintain and update the Master Schedule monthly showing the actual progress made and any revisions in the schedules or at any time that changes in the design, construction, procurement and installation cause any major change in the overall schedule. Required reporting frequency intervals may be shorter during critical periods at the discretion of the City of El Paso or its representative. Such additional reporting frequency shall not be grounds for additional cost claims.

3. If the monthly schedule update reflects, or the City of El Paso or its representative determines, that the BHS Contractor is at least ten percent (10%) or fourteen (14) or more calendar days behind the original progress schedule (whichever is less) for the BHS project as a whole, a major Contract item, an item of BHS which is on the critical path, or an item of BHS not on the original critical path but that, because of the delay or anticipated delay, becomes a critical path item, a proposed recovery plan shall be submitted for bringing the BHS project back on schedule and for completing the BHS within the Date of Completion with the monthly schedule update.

4. Allow for the co-ordination and interfacing of his work in line with the construction work of the terminal, and other such contractors. Such co-ordination and interfacing shall include for permitting the direct contractors to complete their work before proceeding to complete the balance of project under this BHS Contract. In the event of failure to allow for such co-ordination and interfacing, no claim whatsoever shall be entertained by the City of El Paso or its representative for any additions, amendment, re-medial or abortive works to be carried out by the BHS Contractor or the contractors to ensure satisfactory completion of the project. Obtain the overall construction program and project schedule of the terminal and other such direct contractors and include them into his Master Schedule.

5. Revisions to the Project Schedule may be requested in the event the BHS Contractor's planning for the work is revised. If there are desired changes in the Project Schedule to reflect revisions in the method of operating and scheduling of the work, notify the City of El Paso or its representative in writing, stating the reason for the proposed revision.

6. Ensure there are sufficient personnel available for the purpose of coordination to ensure timely completion of the BHS and to ensure that the BHS Contractor does not hinder the work of other trades. Provide personnel with the required experience for coordination at meetings as required by the City of El Paso or its representative so that decisions regarding coordination issues can be made during coordination meetings and the BHS Contractor

F. Construction (Phasing) Schedule

1. Construction phasing shall be in accordance with the General Construction Manager's schedule. Coordinate with the General Construction Contractor, the City of El Paso or its representative to develop a BHS installation phasing plan

2. Submit a detailed phasing plan for each subsystem designated for modification (if existing), installation, description of the work, staffing requirements and schedule per phase. The overall plan/schedule shall be broken down by subsystem of activity (as coordinated with the project team). Clearly identify any differences between the proposed schedule and the Part III BHS Construction Phasing Sequence.

3. Refer to Part III of this Specification Section (34 77 16) for the CBIS Phasing General Requirements and

Section 01 35 00 for the detailed summary of the Project Phasing Program.

G. Structural Attachment Details

1. Submit structural and seismic (if necessary) attachment detail drawings and the design computations of all structural supports for the BHS and associated catwalks signed and sealed by a Professional Structural Engineer licensed in the State of Texas, the same jurisdiction where this project is located.

2. Submit for review the design and locations of all structural attachment points, wherever the equipment is to be supported by the building structure. Show, as a minimum, the type of anchor device to be used and the amount of load to be imposed on the building structure.

3. Take into consideration the location of building expansion joint locations which can affect the layout / installation of the conveyor or of structural attachment points.

4. Submit a complete vibration isolation-drawing package, showing isolation type, as well as method and location of installation.

5. Submit a list of successful projects, which used the type of BHS attachments and vibration isolation package being proposed for this project.

6. The allowable conveyor equipment loads that are permitted to be imposed on the building structure are referenced in the contract documents. If different loads are considered, higher than what is illustrated in the contract documents, coordinate with the City of El Paso's structural engineer and provide a BHS support system that will distribute the conveyor equipment loads so they do not exceed the maximum allowance that is referenced in the contract documents. The design and installation of the BHS support system and associated structural attachments to the building structure shall be in conformance with the allowable loads of the building structure and ensure that all State and Local codes for seismic requirements are met and abided by for this project. Coordinate with the Architect's structural engineer to ensure that all State and Local codes for any seismic requirements are met and abided by for this project.

H. Shop Drawings, Installation Drawings, and As-Built Documents

1. General

a. All drawings submitted shall become the property of the City of El Paso.

b. All drawing submittals shall be to scale. The scale utilized shall be clearly defined in the title block.

c. The North arrow shall also be shown on all mechanical drawings.

d. Drawings shall include the following items unless otherwise specified.

1.) Document Title Blocks

a.) In addition to information normally presented in a drawing title block, each drawing title block shall provide the following specific information:

(1.) Three letter airline code for airport designation of the project location

(2.) Name of the Baggage Handling System

(3.) Drawing scale

(4.) Drawing title

(5.) Drawing number/sheet number

(6.) Drawing date

(7.) Drawing revision date and revision number

(8.) NOTE: All drawing revisions shall be foot noted on the drawing face as well as in the appropriate revisions section of the title block.

e. Professional Engineer Approval Requirements

1.) Engage Professional Engineer(s) licensed in the State of Texas in the relevant disciplines, at its own cost, to design, review, verify and certify the BHS structural systems including all necessary temporary works and supports.

2.) Minimum requirements for Professional Engineer signed and sealed drawings and calculations to be submitted are defined below. Submit any additional signed and sealed drawings, calculations or submissions required by federal, state or local codes. As a minimum, the following drawings, calculations and submissions shall be signed and sealed:

a.) Mechanical/Structural

(1.) All structural and seismic attachment details and design computations for the BHS and associated catwalks

(2.) All structural support details and design computations for the BHS and associated catwalks

(3.) Drawings and design computations of all structural attachment points to the parent building including imposed load on the building

(4.) Drawings defining all structural supports and attachment types and locations. Generic details will not be acceptable for this purpose.

(5.) Drawings defining all maintenance catwalks and methods of catwalk access including details of handrails, access stairs and ladders, and catwalk construction details.

b.) Electrical

(1.) All new and existing modified BHS PDP and motor control panel connected load calculations

c.) Provide the above mechanical/electrical PE signed and sealed drawings/calculations as listed above in part a.) and b.) in two separate submittals:

(1.) "For Construction" drawings/calculations

(2.) Final "As-Built" drawings/calculations

2. Drawing Submittal Package Requirements

a. Submit to the City of El Paso or its representative final installation drawings defining BHS erection procedures, mechanical and electrical component layouts and the relationship of the equipment components to each other and to the facility prior to the commencement of fabrication. Employ an approved independent agency for the required inspection of all BHS related support attachments to the building structure and the review and approval of the Contractor's PE signed and sealed structural attachment documents and point loading diagrams as they relate to the actual installation; these special inspections of BHS related structural members shall be performed in compliance with the International Building Code (IBC) 2009, Chapter 17 – Structural Tests and Special Inspections. These services shall be performed at no additional cost to the Project.

b. Submit a motor schedule listing: motor horsepower, voltage, source of feed, circuit breaker size, disconnect size, conduit and wire size and overload heater size selected to be used, prior to the installation of overload heaters on the controllers.

c. Submit to the City of El Paso or its representative for review the BHS equipment combined heat output figures with calculations for the following areas of the facility. The information typically includes friction losses from conveyor equipment and heat outputs from the drive motors, motor control panels and computer equipment:

1.) BHS Control room(s)

2.) BHS Motor Control Panel room(s)

3.) Baggage Inspection Room(s)

4.) BHS tunnels

5.) Conveyor equipment enclosures.

d. Submit As-Built drawings as per the specified submittal schedule (plans and associated sections/elevations) indicating the location of the BHS, including all mechanical components, maintenance catwalks and electrical devices, operator's control panels, MCP, switches, and other control devices. Ensure that the submitted "As-Built" documents and related information that is issued on CDROM, DVDROM, or USB Flash Drive are accurate and include all BHS/CBIS related Communication/Network Layout drawings, Final Descriptions of Operations, Final copy of the Programmable Logic Controller (PLC) programs with all relevant drawings, Final copy of BHC system and PLC software disaster recovery procedures, Computer Crash Recovery Disks and all operations and maintenance manuals. All final "As-built" drawings shall be signed and sealed by a Professional Engineer licensed in the State of Texas, at no additional cost to the City of El Paso.

e. As-Built drawings shall be submitted on CDROM, DVDROM, or USB Flash Drive in addition to other forms of media described herein.

f. Submit final assembly drawings, shop detail drawings and any other pertinent drawing files in AutoCAD format, version 2014 or higher, for all phases of the work, indicating BHS components, construction and assembly details of all components prior to releasing drawings for fabrication.

3. BHS Mechanical Drawing Submittal Requirements

a. General

1.) If standard parts are purchased, reproduced details and identifying part numbers shall be provided.

2.) Each BHS device or conveyor that appears on plan, elevation and section drawings of the BHS shall be identified with the appropriate I.D., as established in this Specification.

3.) Number conveyor equipment and control devices starting at the beginning of each conveyor system or subsystem. If there are any discrepancies between the contract document-specified equipment I.D. numbers and the actual identification of existing (to be retained) equipment, such discrepancies are to be brought to the attention of the City of El Paso or its representative for immediate resolution.

4.) All plan views of the BHS system shall be based on an overlay of the building structure as is appropriate.

5.) All plan, elevation and section drawings of the BHS shall also show the vertical and horizontal clearances between the related system equipment and the building structure with its related interferences.

b. Provide the following types of mechanical drawings:

1.) General arrangements with dimensions of all new, modified, and relocated equipment (plan, elevation, details and sections, as appropriate) for all mechanical, maintenance catwalks, crossovers, ladders (coordinate with the Architect and the City of El Paso or its representative for the final number and location of all maintenance access equipment), impact protection, electrical motor control panels, electrical equipment support, electrical control workstations and displays, servers, ATR scanner arrays, manual encoding consoles, EDS machines and ETDs.

2.) Drawings with the appropriate level of detail, as noted in the contract documents, shall be provided for any equipment designed and manufactured for this project.

3.) Detailed drawings are required for all BHS equipment framing, supports, hangers, and other required supports.

4.) Detailed drawing indicating locations and type of safety signage.

5.) The general contractor shall provide detailed drawings associated to the EDS and BHS hoists and associated interface to the hoist beams. General contractor to coordinate with the EDS OEM for equipment requirement, identify hoist placement, and hoist routing.

6.) Detailed drawings with dimensions of all safety guards such as, but not limited, to the following:

a.) Conveyor under-pans

b.) Rotating shaft guards

c.) Conveyor shrouds

d.) Drive v-belt / chain guards

e.) Metal bearing covers

f.) Finger guards

g.) Gap pans

h.) Drive pans

i.) Breakaway end cap safety guards

j.) HSPD safety guards at paddle pinch points

4. BHS Electrical Drawing Submittal Requirements

a. General

1.) Each BHS device or conveyor and related control and power devices that appear on any electrical drawings of the BHS shall be identified with the appropriate I.D., as established in this Specification.

b. Submit the following types of electrical drawings:

1.) Plan view of the BHS noting the identity and location of each new and relocated Motor Control Panels, ATRs, control devices, control station, motor, limit switches, safety disconnect switches, junction boxes and the like as related to each BHS device of the new and modified subsystem. These drawings shall be provided with the following information:

a.) Detailed wiring connections for the above referenced field components, in block form, with a detail of the actual field wiring numbers and configuration.

b.) Detailed conduit routing diagrams indicating the size of conduits and the size/number of conductors for the above referenced equipment/components and associated MCPs and UPS equipment that shall also include their respective feeders and references to their main power supply sources (i.e., Power Distribution Panels or Power Distribution Points).

2.) Layout of MCP system status map or any related control devices or indicating lamps.

3.) Submit all power requirements for the subsystems of this project as per the specified submittal schedule. Any discrepancies between the specified maximum allowable electrical loads and Contractor design loads shall be clearly identified in the review submission. The City of El Paso shall retain the right to reject any and all requests for additional power beyond those as indicated in the Contract Documents. System power requirements shall be calculated in accordance with the recommended practice and shall include connected and demand power.

4.) Detailed drawing indicating locations and type of safety signage.

5.) Detailed block diagram of the BHS Upper and Lower Level Networks to provide a functional overview of the system architecture and a conduit routing diagram that shall illustrate the actual installation and location of the network components. These drawings shall distinguish the

difference between the Contractor provided components and non-Contractor components that the BHS will interface with (i.e., other Airport systems). The overall submittal of these documents shall include specified redundancy provisions and related communications links to new and existing systems (i.e., location of all network devices, switches, routers, repeaters, media converters, fiber connections, terminations, and the like). All components shall be identified as new, existing or relocated and shall include their respective part numbers, as applicable.

6.) Programmable Logic Controller (PLC) computer control system in block diagram format to include the data communication system showing the connections among all PLC, sortation computers and remote I/O units if utilized.

7.) Motor Manifest indicating type, part number of driven equipment, power in horsepower, full load amperes and speed.

8.) MCP general layout showing enclosure size, type, power requirements, equipment location and enclosed component general arrangement. Include a separate I/O list for each PLC or remote I/O in the panel. Identify I/O assignments with Equipment Item Numbers.

9.) Detailed block diagram representing internal layout of components within each motor control panel, both internal as well as external layout of components related to workstations, external layout of ATR scanner array, and the like.

c. Submit the following types of control system drawings:

1.) Plan view of the BHS noting the identity and location of each control device, control station, motor, limit switches, safety disconnect switches, and the like as related to each BHS device of the system.

2.) Plan view of the BHS noting the identity and location of each motor with power in horsepower. Identify all motors that will have a VFD. Annotate which motors are controlled by Variable Frequency Drives; indicate the location of the VFD (either at the motor or located in the relevant MCP).

3.) Plan view of the BHS noting the identity of each conveyor with expected speed in feet per minute.

4.) Plan view of the BHS noting the identity of every photocell location annotated whether a tracking or non-tracking device

5.) Plan view of the BHS noting the identity of every tracking belt tachometer or shaft mounted encoder.

6.) A set of drawings showing those conveyors that will stop by the activation of each specific Emergency Stop in the system as per the specified submittal schedule. The drawings should indicate (using different colors or hatches) the conveyors of the specific subsystem and any adjacent subsystems that will stop for each emergency stop or group of emergency stops as appropriate. Take into consideration the following when developing the e-stop zones:

a.) When splitting up e-stop zones, consideration must be given to the MCP breaks. If the downstream MCP is shut down, upstream bags that are left in the system should be able to divert prior to the equipment that is inoperable.

b.) 45-degree merge e-stops should be tied into the receiving or take-away conveyor.

d. Submit detailed shop drawings which include all interfaces between systems that are affected by the scope of work and shall include but is not limited to connection details (connector type, communication protocol) software protocol, transmission media, location of connections and any other required information. The types of interfaces include; Message Broker, fire system, EDS systems, FIDS and BMS (if provided).

e. Provide an approved 11" x 17" reduced copy of the schematic wiring diagram(s) of each MCP including outline and wiring diagram of all special devices which shall be placed in the door pocket of the MCP.

5. Control System Description Submittal

a. Submit Control System Description as specified in Parts II and III of this specification.

6. BHS Control Room, BSO Office, Computer and Control System Descriptions

a. Submit the Computer/Control Room requirements containing all information pertaining to the requirements of the proposed Computer/Control hardware (refer to Part II of these contract documents for full details on the BHS control room requirements), including:

1.) A proposed room layout of new equipment with phasing drawings and final layout drawings showing spatial requirements.

2.) Environmental requirements (temperature and humidity)

3.) Submit HVAC requirements of old equipment versus new equipment

4.) Raised floor for cable access

5.) Fire protection

6.) Electrical and power requirements (e.g., the number and location of UPS electrical sources)

7.) Requirements associated to batteries installed in UPS devices per International Fire Code 608.

I. Catalog Cuts and Equipment Specifications

1. Submit a catalog cuts manual for all manufactured and purchased items (mechanical, electrical and computer equipment) as per the specified submittal schedule.

2. The catalog cuts shall be contained in binders of the “presentation” type equipped with “D” rings. Additionally, the binders shall be equipped with a clear spine pocket to permit the insertion of the manual title. The catalog cut manual shall be contained within at least one volume of appropriate size and contain the following:

a. Record of Revisions: A "Record of Revisions" sheet shall be provided at the beginning of the catalog cut manual.

b. Table of Contents: A Table of Contents shall be provided at the beginning of the catalog cut manual.

c. Index Tabs: Each catalog cut shall be identified with an index tab with permanently printed information.

3. The catalog cuts must be completely legible and reproducible, directly relevant to the specific items as used in the system. Each individual item shall be clearly indicated by the inclusion of a highlighted/shaded arrow immediately adjacent to the item. Where a variation occurs from the standard component or a special custom ordered part has been used as a replacement for the standard supply, additional details shall be submitted to clarify the identity of the component.

4. The catalog cuts shall include the following items (this list is not to be construed as being complete since it is provided only as a guide):

a. Speed reducers

b. Motors

c. Bearings

d. Pulleys and rollers

e. Motorized pulleys

f. Belting

g. Roller chain and sprockets

h. Belts and sheaves

i. Queue conveyors

j. 45 degree merge conveyors

k. Power turns

l. HSPDs

m. Vertical sorter/merges

n. Tamper-proof fasteners for safety guards

o. Wiring devices (including quick disconnect devices for removable conveyors)

p. Control devices

q. Soft starts, electronic

r. VFDs

s. PLC and peripherals

t. Power regulators

u. Computer equipment

v. Computer monitors

w. Flat Plate devices

x. BIDS Components

y. Automatic Tag Reader (ATR) components

z. Bag Status Display components

aa. Hand held scan guns

bb. Laptop computers

5. Be responsible for a thorough site survey of the existing systems and submit catalog cuts of all components to be utilized for the project. Clearly identify those components that cannot be matched with the existing component, for the City of El Paso or its representative's review and approval.

J. As-Built Submittal Documentation

1. All of the collected As-Built submittals in electronic PDF or HTML format loaded onto the Workstation with browser-based pages linking to the information. This information represents an online documentation of the final project configuration.

a. The information includes, but is not limited to the following:

1.) All Drawings

2.) All Parts Information

3.) All O&M literature including manufacturer's

4.) All Training Materials

5.) All Test Plans

6.) All Verification Sheets

7.) Safety and Quality Assurance Manuals

8.) Preventive Maintenance Program

9.) Motor Manifest

10.) List of Lubricants

11.) Generally, all of the submittals in their final form as requested in this article.

K. Operation and Maintenance Manuals

1. Purpose

a. The prime purpose of the Operation and Maintenance (O & M) Manual is to provide the City of El Paso's operational and maintenance personnel with a thorough understanding of the layout of the system, its function, special features, operational requirements, maintenance requirements, parts information, warranty information, and safety considerations including operational and maintenance access requirements for operating and maintaining the system safely and effectively.

b. This specification is intended as a guide to indicate the basic requirements of the O&M Manuals. The Contractors standard O&M Manual shall be acceptable provided it is functionally equivalent to that specified below and the documents are suitable and usable for the intended purpose.

2. The manual is to be divided into two main sections:

1.) The Operational portion of the manual shall present the information required for personnel to be able to operate the system in a safe and efficient manner. The operational information shall be presented in easy to understand terms to ensure that personnel not familiar with the system will have a thorough understanding of the system upon reading the operational information.

2.) The Maintenance portion of the manual shall present the information required for personnel to be able to maintain the system in a safe and efficient manner. The maintenance information shall be presented in easy to understand terms to ensure that personnel not familiar with the system shall have a thorough understanding of the mechanical and electrical equipment operation and maintenance requirements so that they shall be able to effectively and safely perform maintenance functions such as troubleshooting, servicing, and repairing.

3. Binder Type

a. Binders shall be of the "presentation" type equipped with "D" rings. Additionally, the binders shall be equipped with a clear spine pocket to permit the insertion of the manual title.

b. Binders shall be of sufficient size (number of pages) to be used by a reader with no difficulty of access. Also the documents as bound within the binder shall not be damaged by lack of free space for movement both during storage and use.

c. Standard "letter" size format (8.5" x 11") shall be the basic size parameter for the binder selection.

4. Format

a. The O & M Manual shall be contained within at least two (2) volumes of appropriate size. Note that additional volumes may be required to accommodate multiple operational or maintenance information chapters.

b. The title information shall be generally as follows:

1.)	First line:	Three letter code of the airport in which the system is located (ELP).
2.)	Second line:	"Operations Manual" or "Maintenance Manual"
3.)	Third line:	"For"
4.)	Fourth line: Baggage	Type of system: (such as: Outbound Baggage Handling System Replacement)
5.)	Fifth line:	Date of System, as based on actual beneficial use date
6.)	Sixth line: representative)	Project Number (to be Coordinated with the City of El Paso or its

5. Contents of Manual

a. Record of Revisions: A "Record of Revisions" sheet shall be provided at the beginning of the O & M Manual.

b. Table of Contents: A Table of Contents shall be provided at the beginning of the O & M Manual.

c. Chapter Index Tabs: Each chapter shall be identified with an index tab with permanently printed information.

d. Chapter Index: Each chapter of the O & M Manual shall begin with an index for the related chapter.

6. Operational Information

a. Chapter 1 - Glossary of Operational Terms

1.) Chapter 1 shall include a glossary of operational related terms and equipment identification/designations.

b. Chapter 2 - System Overview

1.) Chapter 2 shall include, at a minimum, the following items:

a.) A basic overview of the system showing overall layout and arrangement.

b.) Identify locations, number of and types of inputs.

c.) Identify locations, number of and type of sort areas (as appropriate).

d.) Identify system and subsystem conveyor designations.

e.) Processing rate of each subsystem as well as the total system-processing rate.

c. Chapter 3 - Baggage Weight and Size Limitations

1.) Chapter 3 shall include, at a minimum, the following items:

a.) Normal Size Baggage

b.) Baggage that can be processed by system but requires special considerations/handling such as but not limited to skis, and golf bags.

c.) Fragile Baggage

d.) Oversized Baggage

d. Chapter 4 - Detailed Description of System Operation

1.) Chapter 4 shall include, at a minimum, the following items written in a clear concise manner:

a.) The detailed operational description of system operation must be written to provide operational personnel a thorough understanding of how to operate the system. Operational personnel include:

(1.) Sky Caps

(2.) Passenger Service Ticket Agents

(3.) Service Baggage Handlers

(4.) TSA Agents

b.) The operational information shall cover system start-up, shut down, operational stop/start control stations, Jam Reset and Emergency stop operational requirements.

c.) The operational information shall also provide a thorough understanding of the system fault annunciation system so that faults can be recognized and appropriate action can be directed.

d.) The operational information shall provide an operator's troubleshooting guide for the safe and

effective correction of operational problems.

e.) The BHS shall be equipped with sortation controllers, computers and workstations; Provide detailed information for the items noted below, affected by the specified requirements of this project (this list is not to be construed as being complete and is provided only as a guide):

(1.) All operator interface command entries

(2.) All operator initiated reports

(3.) All system automatically generated reports

(4.) All system fault alarm messages and reports

(5.) All graphic display information systems

(6.) Creation of Flight/Sort Assignment Tables: Specific sortation controller operation

(7.) Placing equipment "in" or "out" of service

(8.) ATRs

(9.) Hand Held Bar Code Scanner Guns

(10.) Bag Status Displays

(11.) Baggage Loading Procedures relative to placement of Bar Coded Bag Tags

f.) The detailing of the above information shall include (but not be limited to):

(1.) Thorough explanation and purpose of the command message or report.

(2.) Required keyboard or operator response.

(3.) Explanation of expected system response

g.) The operator's information must also include procedures and recommendations for alternative modes of system operation as may be required due to various equipment or subsystem failures.

e. Chapter 5 - Operational Safety

1.) Chapter 5 must provide safety information related to the proper and safe operation of the specified system and its equipment from an operator's point of view and at a minimum must cover the following items (this list is not to be construed as being complete since it is provided only as a guide):

a.) Pre-operating procedure

b.) Start-up and Shut-down Procedure

c.) Emergency Stop and Restart Procedure

d.) Jam Detection, Jam Clearance and Restart Procedure

e.) Equipment Lockout/Tag-out Procedures (the procedure shall reflect/refer to the most current OSHA, ANSI and Local Code, Policies and Standards)

7. Maintenance Information

1.) Chapter 1 - Glossary of Terms and Identification

a.) Chapter 1 must include a glossary of all terms and equipment identification/designations associated with the specified system. Any industry vernacular, vocabulary, descriptions or definitions necessary for further communication of information shall also be provided.

2.) Chapter 2 - Description of System Equipment

a.) Chapter 2 must include, at a minimum, the following items:

(1.) Detailed description of the mechanical conveyor equipment used in the system including widths of conveyors, general specifications and capabilities of the system.

(2.) Detailed description of the electrical equipment used in the system, including the location of motor control panels (MCP(s)), PLC(s), fire/security door(s), sortation controller(s), workstation(s), bag status displays, ATR scanner arrays.

3.) Chapter 3 - Electrical Control Sequence of Operation

a.) Chapter 3 shall include a detailed description of the electrical control sequence of operation and the proposed locations of related field equipment/components, such as the items listed below. (this list is not to be construed as being complete since it is provided only as a guide):

(1.) Location and operation of Control Stations

(2.) Location and operation of Photocells

(3.) Location and operation of Limit Switches

(4.) Operation of MCP(s)

(5.) Operation of PLC(s)

(6.) Operation of Fire/Security Door(s)

b.) Operation of MDS Computer System/Workstations

c.) Operation of MIS Database Servers

d.) Operation of Sort Controllers

e.) Operation of Bag Status Displays

4.) Chapter 4 - Maintenance Safety Procedures

a.) Chapter 4 must provide safety information related to the proper and safe operation and maintenance of the specified system and its equipment from a maintenance point of view and at a minimum, the following items shall be covered (this list is not to be construed as being complete since it is provided only as a guide):

(1.) Pre-operating Procedure

(2.) Start-up and Shut-down Procedure

(3.) Emergency Stop and Restart

(4.) Jam Detection, Jam clearance and Restart Procedure

(5.) Equipment Lockout/Tag Out Procedure (the procedure must reflect/refer to the most current OHSA, ANSI, and local codes, policies and standards)

5.) Chapter 5 - Service, Inspection and Preventive Maintenance

a.) Chapter 5 must provide detailed information for the proper servicing of all of the system equipment and at a minimum must cover (this list is not to be construed as being complete since it is provided only as a guide):

(1.) A general explanation, regarding what the servicing requirements is for the related system equipment.

(2.) Detailed preventive maintenance program outlining required functions and frequencies for the proper preventive maintenance of the components that make up the system equipment items such as belt conveyors, power turns, flat plate devices, HSPDs, servers/computers, bag status displays, security doors, motor control panels, and ATR

scanner arrays. At a minimum, the following items shall be covered however; this list is not to be construed as being complete since it is provided only as a guide. It shall be noted that the information shall be "brand specific" for the actual equipment provided for this system only. Information for equipment types and brands not provided in this system will not be acceptable.

(3.) Inspections for:

(a.) Straight Conveyors, Power Turns, Merge Conveyors, High Speed Paddle Diverters, Vertical Sorter/merge, and ATR Scanner Arrays.

(4.) Lubrication of:

(a.) Motor Bearings, Pulley Bearings (as required), Drive Chains, Speed Reducers, and Power Turn Perimeter Chains/Guides, and all other items requiring lubrication.

(5.) Cleaning of:

(a.) Motors, Drive Chains, Speed Reducers, Photocells (and related reflectors), Motor Control Panels, Workstations/servers, Equipment, and ATR Laser Scanner Equipment.

(6.) Adjustment of:

(a.) Straight Conveyor Belt Tracking, Straight Conveyor Belt Tensioning, Power Turn Conveyor Belt Tracking/Tensioning, Merge Conveyor Belt Tracking/Tensioning, Flat Plate Devices, Drive V-Belt and Sheave Alignment, Drive V-Belt Tensioning, Drive Chain and Sprocket Alignment, Drive Chain Tensioning, Photocell alignment and sensitivity, Drive Motor Clutches, Drive Motor Brakes, and ATR Laser Scanner alignment and sensitivity.

6.) Chapter 6 - Warranty Information and Procedures

a.) Chapter 6 shall provide detailed information regarding the specific Warranty Conditions that prevail on the specified system.

b.) Additionally, the detailed information regarding the system warranty must include the following:

(1.) Date of Beginning and Expiration of Warranty Period.

(2.) Specific instructions regarding the procedures for the documentation and return of items under warranty.

(3.) Provide detailed information regarding the specific warranty conditions that apply to the specified system, assemblies, components and parts

(4.) Names, e-mail addresses, and telephone numbers of the "point of contact" for warranty questions and discussions. Note that the "point of contact" information shall be provided for both "normal" 0800 to 1700 Monday through Friday hours as well as "after hours". Direct communication shall be made available 24 hours/day, 7 days/week, and 52 weeks/year.

7.) Chapter 7 - Troubleshooting

a.) Chapter 7 shall provide detailed information for the proper remedial and corrective action required (troubleshooting) for repair of the system equipment malfunctions.

b.) At a minimum, the following items must be included in a detailed "problem and correction" type of troubleshooting chart (this list is not to be construed as being complete since it is provided only as a guide):

(1.) All mechanical equipment

(2.) All electrical equipment

(3.) All control equipment

(4.) All computer equipment

(5.) BHS/EDS Interfaces

(6.) BHS/Airport Systems (e.g., BSM/FIDS) Interfaces

c.) The troubleshooting information provided in the chart is to cover an exhaustive list of possible causes of system failure or malfunction.

d.) A procedural approach should be used in the documentation to allow service personnel to resolve problems. This method shall emulate the actual problem as well as provide the related solution. Information should be provided to assist in discernment of cause and effect issue as well as find solutions through cross referencing.

e.) The information is to be arranged in a three (3) - column format with respective headings of:

(1.) Trouble

(2.) Probable Cause

(3.) Corrective Action.

f.) Empirical Readings: This chapter shall include the Empirical Readings, as noted in “Testing and Acceptance” section of this Specification that were recorded at the time of the Conditional Acceptance Testing and Inspection of the system. This information is to be provided as a maintenance reference.

8.) Chapter 8 - Removal and Installation Procedures

a.) Chapter 8 shall provide detailed information for the proper removal and installation of all of the system equipment components.

b.) It must be noted that the information shall be "brand specific" for the actual equipment/components provided for this system only. Information for equipment/components types and brands not provided in this system will not be acceptable.

c.) At a minimum, the following items shall be included in this chapter (this list is not to be construed as being complete since it is provided only as a guide):

(1.) Basic Considerations

(2.) Safety Precautions

(3.) Procedural Orientation

(4.) List of special tools, gauges and equipment required for the maintenance of the system, together with illustrations and instructions as to how they are to be used. Sources for procurement of these items shall also be provided.

(5.) Torque Values

(6.) V-Belt Tension Procedures and Values

(7.) Drive Chain Tension Procedures and Values

d.) Component List (this list is not to be construed as being complete since it is provided only as a guide):

(1.) All the components for straight conveyors.

(2.) All the components for power turn conveyors.

(3.) All the components for merge conveyors

(4.) All the components for queue conveyors

(5.) All the components for make-up devices

(6.) All the components for vertical sorters

(7.) All the components for Bag Status Displays

(8.) All the components for workstations

(9.) All the components for sortation controllers

(10.) All the components for HSPDs diverters.

(11.) All the components for ATR scanner arrays.

(12.) All the components for MCPs

9.) Chapter 9 - Illustrated Parts Information

a.) Chapter 9 must contain detailed illustrated parts information. The illustrated parts information shall be provided for all systems, assemblies, subassemblies, components and parts, including but not limited to all mechanical, electrical, workstation, computer, bag status displays, ATR array, and other necessary equipment.

b.) Clear, concise exploded view isometric drawings showing the parts, the relationship of adjacent parts with one another within a given conveyor equipment assembly as well as the diagram number that shall reference the specific part on the adjacent parts information sheet.

c.) The parts information sheet shall be adjacent to the isometric drawing and shall contain:

(1.) Part reference number from isometric drawing

(2.) Part description

(3.) Part Number

(4.) Manufacturer of part

(5.) Number of parts found in the conveyor equipment isometric drawings

d.) Provide the above information in a manner so that the isometric drawing (up to 11" x 17" that can be folded up) shall be on the left hand side of the open manual with the associated parts information sheet as the right hand page of the open manual.

e.) Include model and serial numbers for all special equipment such as power turn conveyors, vertical sortation conveyors, vertical merge conveyors, HSPDs, and the like. All parts shall be referenced to a “next-higher-assembly” level within the drawing hierarchy. The system of referencing shall allow the reader to follow assembly / disassembly procedures in a methodical and orderly manner throughout the documentation.

10.) Chapter 10 - Manufacturer's Literature

a.) Chapter 10 shall provide all of the manufacturer's literature for all of the conveyor equipment mechanical, electrical and electronic components.

b.) Information shall be "brand specific" for the actual equipment/components provided for this system only. Information for equipment/components types and brands not provided in this system will not be acceptable.

c.) Unless unavailable, the actual original manufacturers literature shall be provided. At a minimum, only a first copy of a manufacturer's original literature will be accepted if the actual original manufacturer's literature cannot be provided.

d.) All such copies shall be clear and legible.

e.) All manufacturers' literature shall be appropriately highlighted with a legible solid black arrow for identification of the specific model or type of device used in the specified system.

f.) All manufacturers' literature shall include information adequate for proper servicing of the item, proper operation of the item as well as all required information for the ordering of the item.

g.) Complete list of parts manufacturers including address, telephone number and point of contact.

11.) Chapter 11 - Mechanical Drawings

a.) Chapter 11 shall contain a complete, clear and legible 11" x 17" set of "As-Built" BHS mechanical drawings. Additionally, a PDF copy of these drawings shall also be provided on CD-ROM, DVD-ROM, or USB Flash Drive and inserted into a sleeve pocket within this chapter.

b.) The 11" x 17" drawings are to be folded so that they will fit within the O & M Manual.

12.) Chapter 12 - Electrical Drawings

a.) Chapter 12 shall contain:

(1.) A complete list and definition of the electrical symbols used in the electrical drawings.

(2.) A complete, clear and legible 11" x 17" set of "As-Built" BHS electrical drawings. Additionally, a PDF copy of these drawings shall also be provided on CD-ROM, DVD-ROM, or USB Flash Drive and inserted into a sleeve pocket within this chapter. The As-built drawings shall contain as a minimum the following:

(a.) Detailed wiring connection drawing noting each control device, control station, motor, and all other controls devices, in block form with a detail of the actual "field wiring" numbers and configuration.

(b.) Detailed conduit routing diagram indicating size of conduit, size and number of conductors, junction boxes, control devices, motors, safety disconnect switches, motor control panels, ATRs, and workstations.

(c.) Detailed block diagram representing internal layout of components within each motor control panel, both internal as well as external layout of components related to workstations and external layout of ATR scanner arrays.

(d.) Schematic Wiring Diagram of each MCP, including outline and wiring diagram of all special devices. An additional approved 11" x 17" reduced copy shall be placed in the door pocket of the MCP.

(3.) The 11" x 17" drawings are to be folded so that they will fit within the O & M Manual.

13.) Chapter 13 - PLC Listings

a.) Chapter 13 shall include a complete, clear and legible set of "As-Built" BHS PLC listings. The listing shall include the following:

(1.) Complete set of PLC program ladder logic diagrams as well as PLC and Sortation controller listings for the related system.

(2.) A complete Sequence of Operation shall be included on the schematic diagrams or the PLC ladder logic diagrams.

(3.) PLC ladder logic diagrams shall have detailed "right hand" margin descriptors clearly identifying the function of each device and its associated contact rung locations.

(4.) Include a separate I/O list for each PLC or remote I/O in the panel. Identify I/O assignments with Equipment Item Numbers.

8. O&M Manual Electronic Distribution – The information shall be provided as Adobe Acrobat® PDF or HTML files with HTML pages (browser-based) that allow the user to navigate all the information in an orderly and logical manner. The PDF files shall incorporate bookmarks for each document chapter, at a minimum, in the Acrobat navigational panel to assist in navigating through each document.

9. Draft O & M Manuals

   a. Submit two (2) sets of a draft Operations and Maintenance Manual for review and approval to the City of El Paso or its representative prior to Start-up of the system(s).

10. Final O & M Manuals

   a. Three sets of the Final O & M Manuals shall be presented to the City of El Paso in accordance with the submittal schedule. Timely submittal of a system's O & M Manual is absolutely essential to the proper operation and maintenance of the BHS.

   b. All three sets of the O & M Manuals must be updated by supplement to reflect any Field Changes, equipment changes due to warranty changes, and any other changes., that were made during the Warranty Period of the System, so that all sets of manuals shall reflect "As-Built" information.

   c. The O&M Manual Electronic Distribution medium copy of the O & M Manuals shall be uploaded to the maintenance workstation located in the new BHS control room prior to owner system go live and is also required to be submitted separately to the owner on CD-ROM, DVD-ROM, or USB Flash Drive at no additional cost to the City of El Paso.

   d. All manuals, both digital and / or hard copy must be presented with written confirmation for tracking purposes. Tracking information shall include but is not limited to: the type of media presented, quantity of copies, recipient's name, and the date received. Digital copies of the tracking information shall be transmitted to the City of El Paso and / or its representatives.

L. Periodic Maintenance Inspection and Lubrication Chart

1. Provide a master chart or series of charts involving periodic maintenance of all equipment items in the system and defining, under equipment item subdivisions, the points and frequency of recommended periodic maintenance functions, including inspection, lubrication and replacement.

2. This chart need not detail the procedures involved with such periodic maintenance functions since such procedures will be found in the maintenance manual, but reference shall be made to specific sections or pages therein.

M. Training Program

1. Provide an operational and maintenance training program as specified in Part III of these Specifications.

2. The training program shall be submitted to the City of El Paso or its representative for review and approval prior to the start of System Testing and in accordance with the schedule of submissions.

3. Training materials and documentation to be presented shall be submitted to TSA for review 60 days prior to the first scheduled training session.

4. Training shall be conducted between construction and commissioning phases per latest version of PGDS (5.0).

N. Environmental Requirements

1. Submit any special environmental requirements above and beyond what is shown in these specifications that may be essential for correct equipment operation (e.g., computer hardware, scanner arrays and any other items with special requirements).

O. List of Lubricants

1. Submit a complete list of lubricants to be used on the equipment components. This list shall be standardized on one supplier in order to minimize the number of different lubricants used.

P. Inspection, Functional Specification and Testing Program

1. Submit an Inspection, Functional Specification and Testing Program for the BHS to demonstrate compliance with all specified requirements. Prepare the inspection and test plans based on the information provided in this specification. Meet with the City of El Paso, the TSA and their representatives, at the Airport or other location as requested by the City of El Paso, to review the SSTP and obtain a copy, to ensure the completed CBIS meets all the protocols and requirements contained within, prior to the Pre-TRR with the City of El Paso, the TRR with the TSA's representative (OST) and ISAT with TSA representative. The BHS Contractor's test plan submittal shall include the tests that are associated with the SSTP for the TSA's CBIS Performance and Commissioning Requirements, which will include, as a minimum, the tests that are outlined in Part 3 of this specification. This program shall comply with the guidelines presented in the Acceptance and Testing section of Part 4 of these Specifications (34 77 16) as well as in the TSA's PGDS Appendix D and include the required support and participation by the BHS Contractor for the TSA's SAT testing of the EDS machines, separate Pre-TRR, TRR and ISAT, all consistent with the TSA's testing group's Site Specific Test Plans (SSTP) for the Checked Baggage Inspection Systems Performance & Commissioning Requirements as well as the requirements of the TSA's PGDS.

2. The Functional Specification and Test Program shall identify and demonstrate all System Control Functions relating to the operational, functional and system performance tests. The Functional Specification/Test Plan is to list each Control Station, and Control Device, and its related Control Function that is to be demonstrated/tested. Refer to the Acceptance and Testing Section of this specification for detail test plan content requirements.

3. The testing plan shall include testing of all systems integrated with the BHS e.g. fire system, ACAMS, EDS devices and other interfaced devices.

4. The Inspection, Functional Specification and Testing Program shall be submitted for the City of El Paso or its representative's review and approval prior to the start of System Testing in accordance with Schedule of Submissions.

Q. Test Reports

1. Submit a report after completion of the internal testing, debugging and system tests performed prior to Acceptance Testing summarizing the detailed results of the tests, to the City of El Paso or its representative prior to requesting final acceptance testing by the City of El Paso or its representative.

2. In addition carry out a "dry test run" of Acceptance Tests prior to conducting such tests with the City of El Paso or its representative to ensure that tests conducted with the City of El Paso or its representative are successful.

3. Provide the City of El Paso or its representative, upon request; the results of all in-plant tests, conducted on assemblies or sub-assemblies of equipment or equipment of like that are to be installed.

R. Bag Tag Verification

1. Collect from all the terminal user airlines samples of the originating, transfer bag tags and pier tags they are utilizing. Perform a factory scan test of these collected bag tags for readability by both the ATRs and hand held scanners. Submit a report detailing the readability of all terminal user airlines bag tags to the Engineer and the City of El Paso for review as part of the shop drawing submittal review process.

2. If a bag tag fails the readability test, there will be sufficient time to allow the user airline(s) to either change the format of the bag tag, use a local pier tag or if provided by a local user airline.

S. Certification of Installation Compliance

1. Submit certificates issued by Regulating Authorities (in compliance with work permits (electrical, mechanical, welding, Fire Marshall and other Authorities)), that the equipment has been properly installed, meets all safety standards and is operating within the required accuracy.

T. Certification of Test Compliance

1. Submit BHS Equipment Supplier's Certification that the system has been tested in compliance with the supplier's requirements for testing and has met all testing requirements.

U. Final Parts List

1. Provide a detailed listing and description of all individual system (subsystem) components with reference to layout and assembly drawings.
2. The listing of system parts shall include the following information:
   a. Name of part
   b. Complete description of part
   c. Each specific location that the listed part is used in the system(s).
   d. Total number of parts in system(s)
   e. Manufacturer of part
   f. Manufacturer's part number
   g. Source of supply
   h. Recommended quantity of spares per each item
   i. Price per unit
   j. Lead time or availability of part
   k. Complete list of manufacturers, with addresses, telephone numbers and point of contact.
   l. Manufacturer's catalog literature and specifications for all purchased parts.

V. System Power Requirements and MCP Sizes

1. Submit all the motor control panel (MCP) sizes and related power requirements for the all subsystems of this project. Additionally, submit all the revised power requirements for the existing modified systems. The power requirements shall indicate conveyor segment horsepower removed, horsepower added, and the total connected load of the new and existing modified subsystems (horsepower and full load amps).
2. Clearly illustrate (in color) in plain view how the BHS will be powered in order to satisfy redundancy requirements.

W. Estimated Spare Parts List

1. Submit a list of estimated spare parts required for the first year of operation for the City of El Paso or its representative's review and consideration for a budgetary allowance - include unit price per unit for the estimated spare parts list based on reasonable airline market rates. Spare parts may/shall be purchased for each phase prior to the commissioning of that phase. Include recommended inventory and replacement levels for each phase prior to commissioning as well as part description and identification quantities in system, delivery times, manufacturers and suppliers (their part or ordering numbers).
2. Include any special test instruments required for maintenance beyond the normal inventory of a conveyor maintenance shop. Include a device for measuring conveyor speed and shaft rotational speed.
3. Submit a spare parts list in accordance with Schedule of Submissions.

X. System Reliability Calculations

1. Submit system reliability calculations demonstrating compliance with the "System Reliability" requirements specified herein.

Y. Monthly Status Reports

1. The BHS Contractor's Project Manager shall submit a Monthly Status Report to the City of El Paso or its representative, which shall include schedule updates in accordance with the provisions of the contract terms. The City of El Paso or its representative shall have the right to change the time of submitting and the details of the report. The monthly status reports shall cover, including but not limited to, the following information:
    a. Percentage of mechanical, electrical and controls/computer engineering completion, per subsystem.
    b. Percentage of fabrication completed
    c. Equipment delivery schedule (month look ahead)
    d. Percentage of equipment installed complete:
        1.) Mechanical
        2.) Electrical
        3.) Controls
        4.) Computer
    e. Updated detailed Project Schedule.
    f. Task activities planned for the next month
    g. BHS Engineering Issues.
    h. Interface Issues including but not limited to the following:
        1.) Fire and Security Systems
        2.) EDS devices
        3.) The Airport's and / or Airline's Reservation System
        4.) Building Management System
        5.) Baggage Reconciliation System
        6.) CBRA workstations / Bag Status Displays with associated hand-held scan guns
        7.) PDP and MCP power supply
    i. Right of Way Issues.
    j. Brief description with status of accepted and proposed change orders with associated cost.
    k. Status of payments
    l. Manning by trade.
    m. Percentage of testing completed.
    n. Any other issues.

Z. Submittal Log

1. Provide a log to the City of El Paso or its representative listing all required project submittals to include, at a minimum, the following information:
    a. Type of submittal.
    b. Submittal revision number. (The submittal revision number shall also be clearly identified within the submitted document as well.)
    c. The date in which the submittal is sent out for review.
    d. Company or individual the submittal is sent to.

e. Date in which the submittal was returned after review has been completed.

f. Review status.

g. The log entries shall be maintained as current on no less than a weekly basis with submission to the City of El Paso upon request.

AA. Computer/Software/Hardware Inventory

1. Provide to the City of El Paso or its representative a detailed listing for each computer/PC to be submitted upon Conditional Acceptance.

2. Submit the listing (by computer) along with all program disks, manuals, manufacturers information, and the like information in an organized format (i.e.: binder with dividers or an acceptable format to the City of El Paso) upon Conditional Acceptance.

3. It shall include in addition to the above, at a minimum, provide the following:

a. Complete software inventory by computer, including all version numbers and dates.

b. Complete hardware inventory by computer.

c. Registration numbers, serial numbers.

d. Computer emergency boot/recovery disks.

BB. Computer Log

1. Upon conditional acceptance keep a computer log. The purpose of the log is to keep track of any system computer problems/issues, which occur during the conditional acceptance period for trouble shooting/tracking purposes during its operational life.

2. The log shall be compiled in an electronic format acceptable to the City of El Paso or its representative and shall include, at a minimum, the following information:

a. Date/Time of Occurrence

b. Type of Issue(s) (i.e. graphic monitoring system issue, sortation computer issue, scanner array issue, or the like issue)

c. Description of the issue.

d. Name/shift of individual that discovered the problem.

e. Resolution to the problem on site.

f. Effect on the system.

g. BHS Contractor Individual who should be contacted for support and troubleshooting.

h. Programs, files affected by the resolution to the issue.

3. As a minimum, the computer log should be issued to the City of El Paso or its representative on a weekly basis, or as requested by the City of El Paso or its representative.

CC. Contractor Documentation for the Development of the SSTP by the TSA's representative

1. Submit the following completed and approved for construction documentation. These documents will be forwarded by the City of El Paso to the TSA's representative for the development of the SSTP:

a. BHS Controls System Descriptions that shall include all subsystem Controls Descriptions of Operation (Detailed Functional Specifications)

b. BHS Redundancy schematic diagrams

c. E-Stop Zone Drawings

d. Control Device layout drawings

e. BHS Mechanical Drawings including Plan and Elevation Views

f. Sequenced Implementation Plans with associated Narrative and Drawings

g. Construction and Testing Schedule

2. The above referenced documents shall be submitted to the City of El Paso, with accompanying cover letter, stating the purpose of this submittal. All accompanying drawings shall be clearly visible. All documents shall be submitted in both hard and soft copies (e.g. text documents in MS Word or PDF format and drawings in AutoCAD [.dwg or .dwf] or PDF format.)

DD. TSA Closeout Documentation

1. As-built CBIS documentation shall be submitted to TSA, in both CAD and PDF file format, as follows:

a. Final Description of Operations

b. A complete set of BHS as-built mechanical and electrical

c. drawings, including:

1.) Mechanical

2.) Cover Sheet & Index

3.) Legend

4.) Overall Plan View

5.) Overall Plan Existing (if available)

6.) Isometric (if 3D)

7.) CBRA Egress Plan

8.) ETD Egress Plan

9.) EDS Egress Plan

10.) EDS Removal Path

11.) ETD Plan View (1/2 scale if possible)

12.) CBRA Plan View (1/2 scale, if possible)

13.) Flow Chart

14.) Standard Details

15.) 1/8” scale plan views

16.) 1/4" scale elevation views

17.) Catwalk Drawings

18.) Structural attachment drawings (including load drawings)

19.) Structural Details

20.) Phasing Drawings

21.) Electrical Sheet

22.) Cover Sheet & Index

23.) Legend

24.) Manifest with power summary and belt speeds

25.) Control Device Plans 1/8" scale

26.) E-Stop Zones

27.) Control Device Details

28.) Network Architecture

a.) Upper (Sort Controller)

b.) Lower (PLC)

2. A final copy of the Programmable Logic Controller (PLC) program shall be submitted to TSA.

3. A final copy of PLC and software disaster recovery procedures shall be submitted to TSA including software recovery application.

1.06 CONTRACTOR'S QUALITY ASSURANCE GENERAL REQUIREMENTS

A. Laws, Codes, Rules and Regulations

1. Comply with applicable Local, State and Federal laws, rules and regulations pertaining to the following:

a. Installations, alteration, removal and demolition, including but not limited to the Federal Occupational Safety and Health Act and the Construction Safety Act.

b. Protection of the public during installations, alterations, including but not limited to, requirements for safety of operations, noise control, removal and disposal of waste materials, control of dust, dirt, pollutants, flammable materials, explosive materials, corrosive substances, and protection against fire.

B. BHS Contractor Qualifications

1. Authenticate a minimum of five years of demonstrable experience as a turnkey BHS Contractor for high speed automated baggage sortation systems with the completion of a minimum project value of $10,000,000 (per project) that utilized laser bar code scanning for the automatic processing of baggage, direct interfacing with the airline industry reservation systems for IATA License Plate bag tag information processing, high speed baggage diverters capable of operating at a minimum throughput rate of 60 bags per minute, integration with EDS devices, computerized sortation control systems controlling PLC systems, baggage tracking and computerized report generation for operational as well as maintenance status and graphic fault annunciation for the automated baggage system.

C. Non-Standard Equipment

1. Any proposed equipment which is appreciably different from items previously fabricated or which has not displayed satisfactory performance in a similar environment for at least one year (for a minimum of 18 hours per day, 7 days per week), shall be so noted in the proposal. As a reference, any of the following components that do not meet the requirements listed in the previous sentence shall be considered non-standard:

a. High-Speed paddle diverters

b. High-Speed paddle diverter Slides/Input Conveyors

c. Vertical Sorter Units

d. 45° Merge Conveyors

e. Power Turns

2. Prior to the start of fabrication, a prototype of the new item shall be built and test data shall be presented showing that the item has successfully performed the equivalent of one full year of operation. The City of El Paso or its representative shall be invited to witness the test and review the test data at no additional cost to the City of El Paso.

3. The testing requirements and demonstration will identify such requirements as follows:
   a. Number of hours of run time
   b. Number of test cycles
   c. Processing rates
   d. Mean time between failures
   e. Repair time, serviceability
4. The City of El Paso or its representative must approve the design before the final design and fabrication, provided that the BHS is produced by a firm with at least 3 years of experience in manufacturing and installing such systems comparable to that required under this contract. The City of El Paso or its representative must approve the use of firms with less than 3 years' experience.
5. In lieu of developing a prototype, arrangements may be made for the City of El Paso or its representative to inspect an existing component in operation at an airport at no additional cost to the City of El Paso.

D. Factory Acceptance Testing (FAT)

1. Invite the City of El Paso or its representative to their facility for a demonstration and review of the developed controls systems software, sortation and maintenance diagnostics computer software/hardware interfaces with other airport systems.
2. Demonstrate through simulation/analysis at the Factory Acceptance Testing that the system as designed and engineered shall meet the minimum design/performance criteria as specified in this specification (i.e. EDS machine throughput rates (individual device and per loop), OSR decision time from each EDS machine, sortation subsystem(s) throughput, interfaces with airport systems, main outbound transport line baggage flow balancing controls functionality, system fallback configurations, and all required interfaces. Submit a basis of design document, consistent with the specified system design and performance requirements, to the City of El Paso for review and approval, summarizing the design intent of the simulation, operational scenarios to be included (e.g., all EDS machines operational, one or two EDS machine out of service and the like) and outlining the tests that will be demonstrated as part of this FAT. The simulation shall be provided as an AVI format for visual output. Upon completion of the FAT, submit a copy of the simulation on CD-ROM, DVD-ROM, or USB Flash Drive, as coordinated with the City of El Paso.
3. Submit to the City of El Paso or its representative a Factory Acceptance Testing agenda, based on the previously submitted Functional Specification and System Acceptance Test Plan, for review and approval. The Factory Acceptance Testing shall take place prior to the on-site installation of the computer software and associated hardware.
4. Items identified during the Factory Acceptance Test, as being deficient, shall be rectified prior to installation on-site. The BHS Contractor is solely responsible for any additional monies incurred regarding completion of this task and will not be granted any schedule variances.
5. If all facets of the Factory Acceptance Testing was not demonstrated, or documents were not submitted stating that they had performed the tests internally prior to the City of El Paso's or its representative arrival, the City of El Paso reserves the right to back charge the BHS Contractor for the time and expenses of all who attended on the City of El Paso's behalf.
6. Additional prototypes shall be supplied upon agreement with the City of El Paso on requirement and price.
7. Upon completion, demonstrate design optimization of these components for final acceptance by the City of El Paso or an appointed representative of the TSA.

E. CBRA Workstation

1. Refer to chapter 9 in the latest version of the PGDS for details regarding CBRA workstations requirements.

1.07 PROJECT CONDITIONS

A. General

1. The City of El Paso or its representative does not guarantee the accuracy or the completeness of the information relating to the new or existing utility services, facilities, or structures that may be shown on the drawings or encountered in the work. Any inaccuracy or omission in such information shall not relieve the responsibility to protect such existing features from damage or unscheduled interruption of operations and services.

2. Prior to commencing the work in the general vicinity of an existing system, utility service or facility, notify the City of El Paso or its representative 72 hours in advance and obtain approval before proceeding with the work.

3. Failure to give the 72-hour notice shall be cause for the City of El Paso or its representative to suspend the BHS Contractor's operations in the general vicinity of the System, utility service or facility.

4. Should damage to or unscheduled interruption of airline operations, utility service or airline facility occur by accident or otherwise, the BHS Contractor shall notify the City of El Paso or its representative and take all reasonable measures to prevent further damage or interruption of service. In such events, cooperate with the utility service, Airport Authority until such damage has been repaired and service restored to the complete satisfaction of the utility service or the Airport Authority.

5. Coordinate all building modifications performed by any trade to accommodate the installation of the BHS.

B. Installation Conditions

1. This BHS is to be installed within an existing Airport at both a new and expanded/renovated facility (main Terminal and the Bag room), working simultaneously with other trades.

2. BHS contractor shall visit the site to familiarize themselves with the site conditions and to understand local conditions that may affect the project before submitting his bid proposal. Where possible, familiarize themselves on the availability of temporary access, temporary lighting and power, telephone services, storage facilities, water supply, waste disposal facilities, labor supply, weather conditions, parking of vehicles, loading and unloading of materials, and equipment. In particular, he shall take into account in his bid proposal any effect that any adjacent construction, operations and maintenance works may have on the BHS installation. Determine and allow in his bid proposal for all necessary precaution and for any difficulties that may arise in the execution of the BHS Contract. No claims whatsoever arising out of the site constraints, difficulties of access, temporary services and facilities, labor, and any other charges will be entertained by the City of El Paso.

C. Phasing Sequence

1. Phasing sequence shall be reviewed and approved by the City of El Paso. BHS contractor shall coordinate BHS project schedule with general contractor’s project schedule.

D. Ramp Area Proximity

1. The portions of the construction/installation associated with this project shall take place immediately adjacent to an active aircraft ramp area and airline operations area.

E. Lay-down Area Restrictions

1. Lay-down and shake out areas may be limited to the confines of the immediate building. All Lay-Down areas shall be designated and approved by the City of El Paso or its representative.

2. Refer to the Architectural Contract drawings for preliminary lay down areas that could be utilized by the BHS Contractor. Coordinate usage of lay-down areas with the General Contractor.

F. Restoration of Service Costs

1. Incur all restoration of service costs due to the negligent or accidental damage of any airport utility service or facility. The City of El Paso reserves the right to deduct such costs from any monies due, or which may become due, from the BHS Contractor, or its surety.

G. Right-of-Ways

1. It is acknowledged by all parties that the BHS Contractor has first priorities to the right-of-ways available and/as provided by others. Cooperate with other contractors for coordination of all building right-of-ways performed by other trades to accommodate the installation of the BHS.

2. In addition, preserve all right-of-ways for deferred equipment depicted on the Contract Drawings.

1.08 PROTECTION OF THE WORK

A. General

1. Make such explorations and probes as are necessary to ascertain any required protective measures before proceeding with installation, demolition and removal. Give particular attention to equipment supports and bracing requirements so as to prevent any damage to BHS equipment.

2. Provide, erect and maintain catch catwalks, dust partitions, lights, barriers, warning signs and other items as required for proper protection of operating personnel, the public, occupants of building, workmen engaged in installation, removal and demolition operations, and adjacent construction. Comply with the requirements and restrictions of the Contract Drawings.

3. Do not store or place materials in passageways, stairs or other means of egress. Do not close or obstruct catwalks, walkways, passageways, stairways, streets, walks, terminals, runways, rights-of-way, or other occupied or used facilities without written permission from the City of El Paso or its representative. Conduct operations with minimum traffic interference.

4. Provide and maintain temporary protection of the existing BHS designated to remain where demolition, removal and new work is being done, connections made, materials handled or equipment moved.

5. Protect unaltered portions of the existing system affected by the operations of the work, so that the normal activities conducted in such areas may continue with no interference.

6. Utilize suitable coverings to protect existing work. Be responsible for any damage to the existing BHS and facilities or other contents by reason of the insufficiency of protection provided. Promptly repair damage caused to adjacent facilities and restore as new.

7. Repair any damage to work in place. This includes repair of both new and existing fireproofing materials removed to allow the installation of BHS structural attachment supports, header steel, and any other BHS equipment.

1.09 SYSTEM DESIGN AND PERFORMANCE REQUIREMENTS

A. General

1. All equipment shall be in strict accordance with the specifications described herein. It should be noted and stressed that the system shall be engineered, fabricated and installed with the objective of being of rugged, heavy duty, impact resistant equipment capable of withstanding the abuse and exposure to damage experienced in an air transportation baggage handling facility. Other key factors to be considered in the development of the system and its elements shall be simplicity, reliability, maintainability, and safety, and compatibility with existing equipment.

2. The BHS Contractor is deemed to have studied the system design and requirements presented in the drawings and specification respectively and accepted the design and requirements as suitable and appropriate to safely accomplish the functions and processes described herein. Identify in the bid submission any design aspect or specification requirement that is believed to be inappropriate or inadequate and shall propose alternate solutions to alleviate the perceived problem but shall, in all cases, include in the bid submittal pricing for the base system presented in the drawings. Any alternate designs developed must meet or exceed the design criteria as listed in the specifications.

3. Consideration shall be given to the design, fabrication and installation of all projections, welds, and transfer points between conveyor segments and conveyor items to eliminate damage to the various types of baggage processed.

4. The system and subsystem layout configuration and item/component functional requirements are specifically described on the contract drawings. However, alternate solutions, may be proposed on an optional bid cost basis for consideration by the City of El Paso. Any alternate designs developed shall meet or exceed the design criteria as listed in the specifications.

B. Material and Equipment Approvals

1. Where manufacturer's name, brand or trademark is specified, it has been selected to establish a standard of quality for the materials, components or equipment required. Materials, components or equipment of different manufacture considered to be equal to the materials, components or equipment specified will receive full consideration and shall be subject to approval by the City of El Paso or its representative before being incorporated into the work. The contract price shall in all instances be based only upon materials, components or equipment specified. A list of material, component or equipment suppliers shall be submitted to the City of El Paso or its representative for approval. Provide a listing of sources where any material, component or equipment, for which a substitution approval is being requested, can be obtained.

2. Furnish all engineering data, engineering/shop drawings, literature, test results, calculations, and any other requested information, for review of substituted material, components or equipment. The BHS Contractor shall pay for any redesign necessary to accommodate an “approved equal”.

C. Request for Deviations from Drawings or Specifications

1. Requests for deviations from drawing or specification requirements may be approved at the discretion of the City of El Paso or its representative to permit use of standards inherent in the equipment when it has been determined by the City of El Paso or its representative that such deviations will in no way be detrimental to the conveyor equipment, the safety, operation and maintenance of the specified system, system design, system reliability and its associated inventory of spare parts.

2. Any materials, components or equipment submitted for substitution for this BHS shall be previously proven under the loads as specified in Part I of this Specification in an operational or test equivalent environment for a minimum of 1 year, 18 hours per day, 7 days per week.

D. Baggage Conveyors

1. Conveyor Loads

a. Design the conveyors and their supports using the following loading criteria:

1.) The live and dead static load imposed on the building (composed of the conveyor components, supports and baggage) used for designing structural elements, rollers and pulleys shall be 100 pounds per linear foot except for merges and conveyors designated as Oversize Conveyors, in which case it shall be 150 pounds per linear foot.

2.) All conveyor equipment shall be capable of supporting a single concentrated static load of 250 pounds.

3.) The live dynamic load to be utilized for sizing drives, belts, bearings, and other components, shall be 60 pounds per linear foot for load, unload and accumulating conveyors operating up to a speed of 120 feet per minute. For all other conveyors (e.g. transport, or sortation) it shall be 40 pounds per linear foot operating at a conveyor speed of 90 feet per minute and a throughput of 25 bags per minute adjusted proportional to speed and throughput. As an example, a sort line traveling at 360 feet per minute and rated at 60 bags per minute would have to be rated at 24 pounds per linear foot for load testing. The following formula shall be utilized to determine the test ballast for the purpose of load testing and preparation of related test plans during the BHS acceptance period:

Formula: 40 lbs per Linear Foot x (90 FPM / actual conveyor speed) x (throughput rate / 25 bags/min) = xx lbs per linear feet

2. Conveyor Dimensions

a. All equipment shall be of U.S dimensions. (Insert Metric dimensions if other than US project)

b. Unless otherwise specified on drawings, construct conveyors to the following dimensions:

Conveyor Type	Overall Width	Between Guide Width	Belt Width
Standard Conveyor and Power Turns	42"	39"	36"
Oversized Conveyor and Power Turns	60"	57"	54"

Note: 1. Standard Power Turn Inside Radius shall be 4' 0".

2. Oversized Power Turn Inside Radius shall be 5' 0"

3. Conveyor Side Guard Heights

a. Refer to Part II of this specification for side guard heights.

4. Conveyor Speeds

a. Unless otherwise specified, conveyors speeds shall be selected by the following criteria to minimize the system processing time between the input conveyor(s) and the output sort destination(s):

Type/Location	Speed (Feet/Min)
Public Area Load Conveyors	90
Transport to Sortation Conveyors	120 to 240*
Flat Plate Make Up Devices	90
Sortation	240*
Non-Public Load / Unload Conveyors	120
CBRA Area Load / Unload Conveyors	90
Transport to EDS	90 **
Transport from EDS to Level 2 Decision Point	Variable Speed Drive (30 – 240 FPM Range) ***

* As required to achieve specified throughput rate

** As required by the applicable EDS device manufacturer. Refer to Part II of the project specification for details.

*** As required to achieve a minimum of 45 seconds of OSR time; bags may be held to obtain the required 45 seconds OSR time, as long as it does not affect the system throughput rates.

b. Speed Changes

1.) Make speed changes between adjacent conveyors to increase or decrease a maximum speed (nominally 30 feet per minute) so as not to adversely affect baggage spacing or tracking. Conveyor speed changes between adjacent conveyor segments shall be set that the specified positive bag tracking requirements and system processing times are not compromised.

2.) Feed conveyor speed onto the related make-up device will not be greater than 120 feet per minute, unless otherwise specified.

E. System Processing Rates

1. Unless otherwise specified, System Processing Rate shall be:

Conveyor Type	Minimum Processing Rate
Ticket Counter Lines (Each Subsystem)	25 bags per minute

Curbside Lines (Each Subsystem)	25 bags per minute
Outbound Transport Conveyors	60 bags per minute
Sortation Mainline (Each Subsystem)	60 bags per minute
CBRA Re-Insert Conveyor Line	10 bags per minute
EDS Device	505 bags per hour
Transport to EDS	As required by EDS device manufacturer in order to satisfy TSA processing requirements.

2. The design of the system shall ensure the following:

   a. An EDS Level-2 operator decision time of 45 seconds minimum of OSR time; bags may be held to obtain the required 45 seconds of OSR time.

   b. EDS machine throughput shall be measured at the point or points where bags are returned from the TSA screening system to the existing BHS outbound system.

   c. All "Non-Cleared" bags shall arrive at the CBRA, including EDS Out-of-gauge bags and that the Error Rate shall be:

      1.) Less than (<) 3% - if the Re-insertion belt/line is provided

         a.) Error Rate = ((Total Bags at Reconciliation) – (Valid EDS Out-of-gauge) – ("Non-Cleared Bags" with valid tracking IDs)) / (Total Bags Inducted).

   d. 1% or less of total bags Jam in the Checked Baggage Inspections System as measured in a 24 hour period. No more than three (3) bags (real or virtual) will be involved in any given bag jam event.

   e. Fail-Safe features activate on all mis-diverted bags but activation rate is less than 0.5% of total bags.

   f. Note: Throughput rates shall not be less than the above referenced amounts unless pre-approved by the City of El Paso, the TSA or their representatives.

   g. Note: EDS conveyor subsystem Error Rates shall be calculated using all EDS conveyor lines simultaneously and shall occur over a flow of bags of at least 100 bags per EDS.

F. Baggage Characteristics

   a. Design the BHS to convey standard airline baggage tubs and to process baggage having the following characteristics:

   b. Size of Single Piece Edit for proper EDS and Oversize

Conveyor Type	Length	Width	Height
Standard Conveyor Maximum	54"	33"	34"
Standard Conveyor Minimum	12"	12"	4"
OS Maximum	13'	50"	34"
OS Minimum	12"	12"	4"
L3 Communications eXaminer 3DX 6700	54"	29.5"	21"

Note 1: Average bag length for the purpose of rate testing shall be 33". The system shall be capable of accommodating 42" bag lengths without compromising the baggage-processing rate. The standard outbound conveyors shall also be capable of accommodating 54" bag lengths at lower processing rates. The specified dimensions for the standard baggage sizes are intended to provide the maximum individual dimension for each of the three magnitudes indicated, and not to exceed the maximum baggage weight. For any given length or width dimension, the

baggage conveying surface area must not exceed 12 ft². For example:

(1.) Given a 54" max length dimension, the width must not exceed 32" wide.

(2.) Given a 33" max width dimension, the length must not exceed 52" long.

Note 2: The specified dimensions for oversize baggage sizes are intended to provide the maximum individual dimension for each of the three magnitudes indicated and not to exceed the maximum baggage weight. For example, given a 10' length dimension, the width must not exceed 18"

c. Weight of Single Piece

Conveyor Type	**Weight**
Standard Conveyor Maximum	120 lbs.
Standard Conveyor Minimum	5 lb.
OS Conveyor Maximum	150 lbs.
OS Conveyor Minimum	5 lb.

d. Shape

1.) At least one flat conveyable surface. Baggage meeting the above size limitation but lacking a flat conveyable surface (such as baby carriages, round duffle bags, and the like) shall be processed in standard airline tubs.

2.) Design system to accommodate 90% of the baggage normally encountered with or without the use of standard airline tubs, including but not limited to, golf bags.

e. Surface Material

1.) Complete spectrum of package materials found in air transport baggage, including paper, cardboard, cloth/canvas, plastic, leather, wood, and metals in the following conditions:

a.) Dry to Wet

b.) With/Without:

(1.) Paper/cloth/plastic tape/wrapping

(2.) Plastic/steel bands

(3.) Fiber cord

(4.) Twine

(5.) Wheels

(6.) Straps

G. Physical Constraints

1. Design the BHS to accommodate the following physical constraints imposed on the System by either operational or facility considerations:

a. All conveyors, supports and related components (unless shown as floor supported, within the confines of protective guard rails, or within a confined and protected space) shall have a minimum underside clearance of 8'-0" from the bottom of the support structure to the floor, unless otherwise specifically noted on the Contract Drawings.

b. Minimum clearance on all conveyors from the top of the conveyor belt to the underside of any obstruction shall be 36 inches, unless otherwise specifically noted on the Contract Drawings.

c. All inclined and declined conveyors shall have the following:

1.) A maximum slope of 18° for non-tracking conveyors, unless otherwise indicated on contract drawings.

2.) 12° for tracking conveyors unless otherwise indicated on contract drawings.

3.) 12° for CBIS tracked conveyors unless otherwise indicated on contract drawings

4.) In all cases, where space permits a shallower angle, the Contractor shall minimize the slope utilizing the least possible incline/decline angle to achieve the proper elevation change.

d. All inclined or declined spiral power turns shall have a maximum elevation change of 1 foot in rise or fall per 45° of turn.

e. If any of these design criteria cannot be maintained, notify the City of El Paso or its representative in writing with recommendation for resolution.

H. Vibration

1. Provide shaft mounted components (pulleys, sprockets, and other shaft mounted components) and other components subjected to vibration with some means of preventing loosening of the component such as snap rings, cotter pins, or other methods approved by the City of El Paso or its representative.

2. Mount all conveyors on vibration isolation pads or hangars except those components supported from a ground floor slab or other structural floor whose characteristics prevent vibration from the conveyors from being transmitted to adjacent structure(s) or perceived surrounding area.

3. Vibration isolation devices shall be determined based on individual support loads, vibration frequency and vibration amplitude so that appropriate vibration isolation is proved.

4. Provide vibration isolation devices that prevent perceivable vibration from being transmitted to the surrounding building structure.

5. Ensure that all National, State, and Local codes for seismic requirements are met for the project.

I. Balancing

1. Dynamically balance all rollers and pulleys.

J. Service Conditions

1. Design each element to operate satisfactorily in its respective environment as follows:

a. Mechanical - Indoor (Bagroom Environment)

1.) Temperature: 32° to 120° F (0° to 48°C)

2.) Relative Humidity: 5% to 99% Non-condensing

3.) Protected from direct exposure to weather

b. Electrical/Electronic Equipment Inside Control Panels

1.) Temperature: 32° to 140° F (0° to 60°C)

2.) Relative Humidity: 5% to 99% Non-condensing

c. Electrical/Electronic Equipment - Indoor (Bagroom Environment)

1.) Temperature: 32° to 120° F (0° to 48°C)

2.) Relative Humidity: 5% to 99% Non-condensing

3.) Protected from direct exposure to weather

d. Mechanical - Outdoor or in Unheated Enclosures

1.) Temperature: -20° to 120° F (-30° to 48° C)

2.) Relative Humidity: 5% to 100% condensing

3.) Covered but not protected from driving rain.

e. Electrical/Electronic Equipment - Outdoor or in Unheated Enclosures

1.) Temperature: -20° to 120° F (-30° to 48°C)

2.) Relative Humidity: 5% to 100% condensing

3.) Covered but not protected from driving rain.

f. Electrical Equipment Inside Computer/Control Room

1.) Temperature: 55° to 80° Fahrenheit (13° to 27° Celsius)

2.) Relative Humidity: 5% to 50% Non-condensing

2. During construction if sealed office area is not available for the BHS related computer equipment, a filtered air environment area should be provided (by others).

3. Provide and clearly identify any special environmental requirements more stringent than what is shown in these specifications that may be essential for correct equipment operation (e.g., computer hardware, scanner arrays, and any other components with special environmental requirements).

4. The above listed requirements do not take into consideration separate requirements that may be required for any related non-BHS equipment that may be provided and installed by others (such as but not limited to EDS devices and EDS workstations) or personnel that may drive environmental requirements in various areas where BHS equipment also exists.

K. System Safety

1. Design, manufacture, supply, install and construct the BHS in accordance with all of the requirements in the Contract Documents, and shall meet or exceed all applicable laws rules, orders, regulations and codes. In this regard, the BHS Contractor shall be responsible throughout this Contract to bring to the attention of the City of El Paso or its representative in writing any changes in such laws, rules, orders, regulations and codes and any condition(s), whether caused by its design or any BHS Contract requirements, which the BHS Contractor believes may result in or has resulted in an unsafe condition(s). Rectify at the BHS Contractor's own cost any such condition(s) resulting from its design and not directly as a result of any Contract requirement(s). Where the City of El Paso and the BHS Contractor mutually determine that such condition(s) is directly a result of any Contract requirement(s) or any changes in laws, rules, orders, regulations and codes, then the City of El Paso and the BHS Contractor shall seek a mutual resolution of the condition(s) to be effected by a Change to the Contract.

2. Utilize control methods and techniques, circuitry, mechanical and electrical equipment and operating/maintenance procedures to provide maximum safety for operation and maintenance personnel and to minimize potential damage to the equipment and to the baggage being processed. Incorporate fail-safe techniques to prevent the occurrence of unsafe conditions, which could result from an equipment failure or improper implementation of the operating procedures.

3. As employed herein, the failsafe principle shall be interpreted as follows:

a. In the event an equipment failure or external influence such as improper operation, high temperature, power failure, or other adverse condition affects the proper function of a system or element involved with the safety of life or health, said system or element shall revert to a state known to be safe to all personnel interfacing with the equipment.

4. Ensure that all provided and installed equipment meets all applicable local, state and federal safety codes, including applicable OSHA standards and requirements, for baggage handling systems/conveyors and industrial machinery environments.

L. Personnel Safety

1. The operation of the system shall be convenient and safe to use, and control functions to be performed shall be simple to minimize possible errors. Provide convenient means for emergency system shutdown.
2. Provide adequate means for ensuring the safety of all personnel who have access to the system in the system design.
3. Provide sufficient safety signage throughout the system.
4. Provide lockable devices such as disconnect switches and lockouts to prevent the accidental activation of those portions of the system shut down for maintenance. These devices shall be located in all areas.
5. Provide equipment and component guards on all drives for conveyors and sortation devices. House all moving parts in personnel areas with guards (such as bearings, return rollers, and return conveyor belts).
6. Provide sufficient work space in all limited access areas
7. Provide audible and visual warning signals along all areas of the system to make apparent any potential hazards to the public, operating and maintenance personnel resulting from moving or about-to-start equipment.
8. Provide protection from falling objects in work areas or aisles located beneath overhead portions of the system with gap pans or netting.
9. Locate conduits and all other electrical components where they shall not be subject to damage by maintenance or operational personnel.
10. Coordinate access provisions for operators so as to minimize obstructions. Locations of control stations and electrical boxes shall be coordinated to support unrestricted access by staff. The provisions of the conveyor supports, drive configurations, personnel guarding and side guards shall allow for maximum operator accessibility.

M. Noise Levels

1. Design, fabricate and install the BHS to limit combined equipment and controlled ambient noise levels to the following allowable maximum requirements. However, the BHS equipment shall not increase the ambient noise level by more than 15 dB (A). In any case, ambient noise levels for the BHS equipment shall not exceed OSHA standards.
2. Design, fabricate and install the BHS to limit combined equipment and controlled ambient noise levels to the following allowable maximums

Noise Level	Ambient
45 dB (A)	In adjacent or nearby office areas (measured at the center of room at a height of 5’-0” above the floor).
65 dB (A)	In public areas, or ceiling above public areas and offices (measured at a number of positions normally occupied by passengers, public, OSR).
70 dB (A)	In CBRA to be measure as specified in the PGDS Section 9.3.9
75 dB (A)	In the bagroom and all other associated non-public areas or unoccupied areas.

3. To accommodate noise levels of 65 dB (A) or less (in public areas), consider the following items for conveyor segments installed in these spaces to minimize noise levels:
   a. Use low noise PVC belting.
   b. Use either shaft mounted drives or underslung drives with toothed belts (no chain drives).
   c. Mount all safety guards with rubber isolation washers between fasteners and the conveyor frame.

d. Use bolted return rollers (i.e., no spring loaded return rollers).The use of UHMWPE polyethylene washers shall be placed between the rollers and mounting brackets to reduce side play and noise caused by side play. Provide high quality low noise bearings.

e. VFDs shall not be set with a maximum output frequency of greater than 60 Hz. This is to limit the amount of noise generated and difficulties stopping with output frequencies set beyond this limit. Set the VFD carrier frequency as to not increase the motor audible noise level.

f. Use vulcanized spliced or endless type belting in areas that require reduced noise levels.

g. Provide under-guarding on all conveyor segments, regardless of their elevation, in areas that require reduced noise levels.

h. Provide a metal shrouding on both the operator (i.e., adjacent to the locations where the TSOs operate) and non-operator side (i.e., not adjacent to the locations where the TSOs operate) to dampen the noise generated by the conveyor equipment.

i. Add a fire retardant sound damping material to the inside of under guarding to reduce sound levels.

4. Unless otherwise specified the measurements shall be taken at a maximum distance of 5 feet vertically and 5 feet horizontally from noise producing components.

5. The noise level measurement shall be accomplished utilizing an integrating sound level meter supplied by the BHS Contractor. A qualified person employed by the BHS Contractor shall accomplish measurements and evaluation. Submit a certificate of calibration to the City of El Paso or its representative.

6. The noise level shall be the Equivalent Continuous Sound Pressure Level measured over a period of one minute or more at each location. In addition, to the overall A-weighted noise level, the Equivalent Continuous Sound Pressure Level shall be measured for each octave frequency band from 125 Hz to 4000 Hz.

7. Conveyor noise shall not be unduly impulsive. Observing the difference, between the measured Equivalent Continuous Sound Pressure Level and the instantaneous sound pressure level, shall test the impulsiveness of the noise. A component shall be considered unduly impulsive if the differences exceed 3 dB (A).

8. Conveyor noise shall not be unduly tonal. Tonality shall be determined by observing the difference in level between any A-weighted octave band and each of its adjacent A-weighted octave bands. The sum of the differences shall not exceed 6 dB (A). All octave bands from 125 Hz to 4000 Hz shall comply with this requirement.

9. Every conveyor component shall be tested. The components shall be tested at full design speed under load conditions.

10. Where conveyors are located in the ceiling spaces of non-bagroom areas, the noise measurements shall be taken after the architectural ceilings are in place.

11. Noise level measurements shall be taken during non-operational hours to ensure passenger conversations or movements do not unduly increase the ambient noise levels in public areas.

12. Measurements shall be taken during a time when the ambient noise levels are at least 6 dB (A) below the conveyor noise level. The ambient noise level shall be determined both before and after the measurement of the components. The ambient noise level shall be determined as follows:

    a. The BHS equipment shall be turned off.

    b. All other equipment (i.e., air-conditioning and heating equipment) shall be on and outside noise sources (from aircraft and mobile ground equipment) shall be as normal.

    c. Noise level readings shall be taken throughout a zone 5 ft vertically and 5 ft horizontally from the BHS equipment using an integrated sound level meter set to the A-weighted network.

    d. After the ambient noise level has been determined, the BHS equipment shall be turned on and the total noise level shall be measured at the same points throughout the zone that the ambient levels were

measured.

13. Submit a written report to the City of El Paso or its representative detailing the results of the noise level measurements.

N. Radio Frequency Interference/ Electro Magnetic Interference (RFI/EMI)

1. Ensure by design and shielding that system equipment shall not create electromagnetic emissions, which can, in any way, cause interference with communications within the airport or between the airport and aircraft or ground support vehicles.

2. Choose all electrical and electronic equipment (including computer and related equipment) to operate without malfunction in the presence of normal electromagnetic emissions generated by other equipment normally installed or used at the airport including but not limited to the aircraft communications bands, high-power radar systems, various electrical motors and controls, power tools, welding equipment, automotive vehicles, ground power units and air handling units. Provide isolation transformers and line suppression units, if required.

3. Radio frequencies, if used for communications or information transmission within the systems, shall be applied for to the relevant Airport and Government Authorities for their designation and assignment.

O. Maintainability, Life & Reliability

1. The requirements set forth in this section are minimum requirements and do not relieve the obligation to provide a system in which all required maintenance tasks can be readily performed.

2. Design all components so they can be easily disconnected and removed from the equipment without the necessity for extensive disassembly. Design the components for removal and replacement by two (2) staff in a period not to exceed two (2) hours. Be prepared to demonstrate that any maintenance task, not so listed, can be accomplished as described above. Correct any installation, without charge, as required to accomplish this demonstration.

3. Design the system so that equipment components requiring inspection and servicing are readily accessible. Provide suitable doors for this purpose. Where necessary, provide access holes in frames or guards but keep them to a minimum number and size, and ensure that they do not create protrusions or discontinuities detrimental to the baggage being conveyed.

4. Design equipment to facilitate maintenance functions in preference to ease of fabrication.

5. Design equipment such that, whenever possible, assemblies shall not require dismantling in order to troubleshoot, repair or replace assemblies or components of assemblies involved in such servicing procedures.

6. Affix cover plate attachment hardware to, or hold captive in, the cover plate assemblies.

7. Provide all electric assemblies, panels, or boxes with the appropriate schematic, enclosed in a clear-faced envelope affixed in a location visible to personnel while servicing such items.

8. Provide a device for measuring conveyor speed and shaft/pulley rotational speed prior to commencement of Acceptance Testing for use by the City of El Paso or its representative, during the Acceptance Testing period.

9. Provide fixed or mobile ladders, service catwalks, lifting lugs or other applicable provisions to ensure easy access to components requiring servicing, either as shown on the specification drawings or as required to assure a safe and efficient system for all personnel who operate, maintain or have access to it.

P. Standard/Interchangeable Components

1. Minimize the number of different types and makes of components used in the BHS to simplify spare part inventory.

2. Design all equipment and components to definite standard dimensions, tolerances, and clearances to provide maximum inter-changeability.

3. Provide like types of equipment from the same manufacturer wherever practicable.

Q. Lifespan

1. Provide equipment components and items for a system equipment life of a minimum of 15 years and an operating duty cycle of 18 hours a day, 365 days per year. This provision is a design objective, not a warranty.

2. It is understood that PC based computer equipment may not have the identical hardware available for the full 15 year period (PLC equipment does not fall under this category), as such submit a list of the estimated spare parts required to maintain the PC based computer hardware for the 15 years of operation for the City of El Paso or its representative review and consideration for a budgetary allowance - include unit price per unit for the estimated spare parts list based on reasonable airline market rates.

R. System Reliability

1. Reliability requirements of the total BHS shall be measured in terms of "System Availability" (A_s).

2. Failure

a. A failure is defined as any malfunction of a System component, assembly, or subassembly which stops normal operations. A failure shall be charged against only the one subsystem, which causes that failure. The following shall not be classified as failures:

1.) Malfunctions caused by a failure on the City of El Paso's part (after system acceptance) to properly maintain and operate the System in accordance with recommended procedures.

2.) Malfunctions due to causes outside the System such as but not limited to sabotage or general power outage.

3.) Malfunctions due to baggage jams not caused by failure of a system component, assembly or subassembly unless it is a defective part, a poor installation, or a failure of a component or subassembly to perform its intended function.

4.) Incipient failures, which are detected and repaired without affecting normal operation of the System.

5.) Malfunction of one of a redundant Computer/PLC pair where the repair time does not affect normal operation of the system. However, reliability of redundant computer pairs is defined elsewhere in this specification.

3. Sub-System Availability (As)

a. Sub-System Availability (As) shall be defined by the following equation:

$$As = \frac{(ST - RT)}{ST}$$

ST = Scheduled Operating Time: The scheduled time that the BHS is available for baggage processing (normally 18 hours per day).

RT = Repair Time: The interval of time between initiation of repairs due to a failure and return of the BHS to operation.

b. Each subsystem of the BHS shall have an availability of not less than 0.995 (99.5%) to be calculated on a monthly basis. However, the maximum allowable downtime in a single operating day shall be no more than 15 minutes on one subsystem; additionally the accumulative downtime for all subsystems shall not exceed 20 minutes.

c. No more than one failure per month of one of the computers, PLCs, workstations and any other control equipment within of any slave/master pair shall be acceptable.

d. All computer and control systems (including but not limited to BHS host computers, Sortation computers, and workstations) shall have an availability of not less than 0.999 (99.9%) to be calculated on a monthly

basis. However, the maximum allowable downtime in a single operating day shall be no more than 2 minutes for a single event. The maximum downtime where both slave/master pair within computers, PLCs, and workstations fails simultaneously shall be 10 minutes in a year.

4. Tracking Accuracy

   a. Tracking accuracy shall be defined as the percentage of successfully tracked bags from an encoding position (EDS device, ATR, decision point and CBRA scan gun) to the final output device. Tracking accuracy shall be a minimum of 99.5% calculated on a daily basis, for the total number of bags input into the baggage system. Tracking accuracy is a measure of the system's ability to identify and control the location of the baggage from the point of encoding to the correct output. The tracking accuracy shall be based on missing/lost bag counts as reported/verified either by the MIS and operations/ramp personnel.

   b. All bags, which are read by the scanners or assigned an ID by an EDS device shall be verified for proper destination.

   c. All bags, which are read by the scanners or assigned an ID by an EDS device shall not swap their tracking ID with the tracking ID of another bag during the course of transport through the BHS.

   d. If a bag that has been successfully read by the scanner array (or assigned an ID from an EDS device) gets out of its respective "tracking window", that bag shall be tracked as a "BHS Unknown" bag. It is not acceptable for any bag to be mis-sorted because of a failed tracking process. Route "BHS Unknown" bags as follows:

      1.) All "BHS Unknown" within the BHS sortation system shall be sent to the default/runout make-up device. Note that these "BHS Unknowns" shall not be counted as a successfully tracked bag.

      2.) All "BHS Unknown" bag within the EDS matrix shall be routed as detailed in Part III (3.08 - BHS Detailed Control Descriptions/Requirements – EDS Security Screening Subsystem) of this specification.

      3.) The BHS Computer System shall generate appropriate fault messages indicating the "BHS Unknown" bag.

   e. Bags that are proven (as reported by maintenance/operations/ramp or TSA personnel) to have lost tracking due to being incorrectly introduced into the system (i.e. bags on wheels), snag at a slop plow or are moved out a tracking window as a result of the clearance of a bag jam shall not be counted against the tracking accuracy.

   f. Bags that are assigned an "EDS Unknown" status from an EDS device are not to be treated/reported as mis-tracked bags, these bags are to be tracked, routed and reported as detailed in Part III (3.08 - BHS Detailed Control Descriptions/Requirements – EDS Security Screening Subsystem) of this specification.

   g. Bags that are not assigned as status by the EDS device shall then be assigned an "Communication Error" status by the BHS. These bags shall be tracked as "Communication Error" bags and routed to the CBRA for Level 3 screening.

   h. For the BHS "Clear Bag" sortation lines, if a bag has been successfully read by the ATR are assigned an ID by the BHS, but fails to appear at any tracking photocell, that bag shall be identified as a "missing bag" by the tracking control system. Three missing bags in succession at the same tracking photocell in the clear bag sortation subsystem shall cause the tracking control system to automatically stop the associated conveyors and declare a "missing bag jam". Note that all missing bag occurrences shall be reported regardless if they are singular or multiple occurrences.

   i. In the event of an EDS dieback, an emergency stop condition or a power outage on a subsystem, the PLC shall retain all baggage tracking information such that upon restart of the conveyors, the subsystem shall route bags to the appropriate location(s).

   j. For the CBIS, if a bag has been successfully scanned by the Level 1 EDS machine and tracked from the Level 1 device but fails to appear at any tracking photocell, that bag shall be identified as a missing bag by the tracking control system. Three missing bags in succession at the same tracking photocell shall

cause the tracking control system to automatically stop the associated conveyors and declare a "missing bag jam". Note that all missing bag occurrences shall be reported regardless if they are singular or multiple occurrences. The missing bag controls functionality, as it relates to the CBIS tracking zone shall be configurable by the BHC System Manager User Interface Controls.

k. Provide as part of the MIS day end report, tracking accuracy as a percentage of bags inducted per line versus number of bags that lost tracking on the respective line. Detail in the MIS reports a listing of all bags that lost tracking with associated BSM details, time and location tracking was lost.

l. Tracking accuracy shall be demonstrated during system acceptance testing and shall be proven (through operational reports) that it is maintained during the three-month operational period prior to system final acceptance.

5. Sortation Accuracy

a. Sortation accuracy shall be defined as encoded baggage that is sorted correctly to the assigned make-up device. Baggage that is sorted to an incorrect make-up is classified as a mis-sort. Sortation accuracy from an encoded position (check-in, ATR) of 95% shall be achieved for the total number of bags input into the BHS i.e. mis-sorts are unacceptable.

b. Sortation accuracy shall be demonstrated during system acceptance testing and must be proven (through operational reports) that it is maintained during the three month operational period prior to system final acceptance.

6. ATR Read Rates

a. The minimum monthly successful ATR scanner array read rate maintained for originating baggage, shall be 95% successful reads of all IATA 10 digit license plate tags, Fallback tags, that are in good condition. This figure does not apply to hand written tags or non-compliant tags, which negatively impact actual, read rates. Each ATR scanner array shall achieve a minimum read rate of 99.9% during testing and 95% for originating bags during actual operations on which machine-readable tags, in good condition, are affixed.

S. Parts Availability

1. Maintain, for immediate delivery, an adequate inventory of spare parts (especially long lead time items) required for routine maintenance of the system. Ensure that critical spare and replacement parts required by the system are made available for a minimum of a fifteen (15) year operational period through the availability of shop and as-built drawings and through the availability of the actual parts. Additionally, ensure the availability of custom or "special" components.

2. If such parts are not available during the fifteen (15) year operation period or should pricing become unreasonably high on a competitive basis, the City of El Paso has the right to permit the use of the project drawings, at their discretion, for fabricating such parts, or having such parts fabricated so as to maintain the specified system.

1.10 STANDARDS AND CONSTRUCTION CODES

A. General

1. The design and subsequent installation shall provide adequate safety factors and shall conform to all current standards and codes of the USA, the state of Texas, the City of El Paso, and El Paso International Airport Authority, or the country of design origin, whichever is more stringent.

B. Construction Codes

1. In the event no specific local codes or standards can be identified, the Contractor shall comply with the most recent version, applicable provisions and recommendations of the following:

a. American Welding Society (AWS)

1.) D-1.1 Welder Qualifications

2.) AWS-C1.1 Recommended Practice for Resistance Welding in Building Construction

3.) AWS-A2.0 Standard Welding Symbols

4.) D-1-0 Standard welding practice in building construction

b. American Gear Manufacturers Association Standards (AGMA)

1.) 6009-A00 Practice for Gear Motors

2.) 6035-A02 Practice for Worm Gear Motors

c. American National Standards Institute (ANSI)

1.) A-1264.1 Safety Code for Floor and Wall Openings, Railing, and Toe Boards

2.) B-20.1 Safety Code for Conveyors, Cableways, and Related Equipment

3.) B-29.10M Transmission Roller Chains and Sprocket Teeth

4.) C-33.1 Safety Standard for Flexible Cord and Fixture Wire

5.) Z535 Safety Color Code

d. National Bureau of Standards (NBS)

1.) Handbook H28 Screw-Thread Standards

e. National Fire Protection Association (NFPA)

1.) NFPA No. 70 National Electrical Code Volume 2, National Fire Code

2.) NFPA No. 79 Electrical Standards for Industrial Machinery

3.) NFPA No. 80 Standard for Fire Doors and Fire Windows

f. NEC National Electrical Code (most current version)

g. Underwriters Laboratories (UL) Standards (Components shall be labeled appropriately)

1.) UL 508 Industrial Controls Equipment

2.) UL 508A Industrial Control Panels

3.) UL 508C Power Conversion Equipment

4.) UL 1998 Software in Programming Components

5.) IEC 61508 Functional Safety Standard for Electrical/Electronic/Programmable Electronic (E/E/PES) Safety Related Systems

h. National Electrical Manufacturers Association Standards (NEMA)

1.) ICS Industrial Controls and Systems

2.) MG1 Motors and Gear Motors

i. American Society for Testing Materials (ASTM)

1.) A-36 Structural Steel

2.) A-794 Sheets cold rolled

3.) A-659 Sheets & Strip - hot rolled

4.) A-307 Fasteners (Bolts)

5.) A-563 Fasteners (Nuts)

6.) F-844 Fasteners (Washers)

j. American Wood Preservers Association (AWPA)

1.) C-27 Fire Retardant Wood

2. All equipment and accessory items furnished and installed under this Contract shall be governed at all times by applicable provisions of federal laws, including but not limited to the revision of the following in effect as of the Contract date:

a. Williams-Steiger Occupational Safety and Health Act (OSHA), of 1970, Public Law 91.596, most current version.

b. Occupational Safety and Health Administration (OSHA)

1.) 29 CFR Part 1910 Subpart D (Walking-Working Surfaces)

2.) 29 CFR Part 1910 -211 (Definitions)

3.) 29 CFR Part 1910 – 212 (General Industry Standards and Requirements) for machines

4.) 29 CFR Part 1917.48 (Conveyors)

5.) 29 CFR Part 1926.555 (Conveyors, Construction Industry Standards)

6.) 29 CFR Part 1926.1053 (Ladders)

c. Office of State Health Planning and Development (OSHPD)

d. American Society of Mechanical Engineers (ASME)

1.) ASME B20.1 – 2006 Safety Standards for Conveyors and Related Equipment, and all Addenda up to and including ASME B20.1-2006

e. Conveyor Equipment Manufacturers Association (CEMA)

1.) ANSI/CEMA 402-2003 Belt Conveyors

2.) ANSI/CEMA B105.1-2003 Specifications for Welded Steel Conveyor Pulleys with Compression-type Hubs

3.) CEMA SBP-001 (2004) Handling Conveyors Design and Safe Application of Conveyor Crossovers of Unit

1.11 WARRANTIES

A. General Warranty

1. Warrant any new BHS equipment for one (1) year against defective parts and labor beginning on the Final Acceptance Date as related to this Project.

2. Warrant all new BHS equipment for three (3) years against design defects beginning on the Final Acceptance Date as related to this Project.

3. Warrant all new BHS software, high level and low level controls for three (3) years against design defects beginning on the Final Acceptance Date as related to this Project.

4. Warrant existing relocated/reused and refurbished equipment for one (1) year against defective parts and labor beginning on the Final Acceptance Date as related to this Project.

5. Assign the City of El Paso all warranties for all materials and equipment received from Subcontractors and Suppliers.

6. The BHS Contractor shall not warrant and shall not be liable for design or throughput capability of the relocated/refurbished equipment (e.g., existing conveyor segments upstream and downstream of the new conveyor segments associated with the modified lines).

7. Considering the construction program for this project is specified to be performed under a Sequenced Implementation Process, where existing subsystems and related conveyor equipment will either be removed from service, modified, reconfigured or tied-in with new conveyor lines that will be installed and turned over for operational use on an Activity-By-Activity basis, the warranty for the BHS shall begin as follows:

    a. Upon the Substantial Completion Date of a given Sequence for all BHS related field components, such as motors, gearboxes, bearings, belting, field control components and MCP control components. Submit a certified warranty statement summarizing the type of warranty coverage with the warranty commencement date for that given Sequence and outlining the BHS equipment that has been substantially completed and turned over for operational use.

    b. Upon the Final Acceptance Date as related to this project for all related BHS Computer Systems and PLC system hardware and software provisions. Submit a certified warranty statement summarizing the type of warranty coverage with the warranty commencement date and an outline of the BHS equipment that will be covered under the warranty.

B. Warranty Exclusion

1. This warranty shall not apply to any defects or inconsistencies, which are attributable to repair, alteration, misuse or abuses by any person other than authorized personnel or Subcontractors. Liability shall be limited to repairing or replacing defective or non-performing part(s) at no cost to the City of El Paso.

C. Warranty Limitation

1. Liability shall be determined in the Contract Agreement and shall also include repairing or replacing defective or non-performing part or parts at no cost to the City of El Paso.

D. Technical Support

1. Provide on-site technical support as defined by the Contract Documents and agreed upon by the City of El Paso or the Engineer. This support shall be by personnel qualified to advise the City of El Paso on training, provisioning, start-up and maintenance of the equipment.

2. The technical representative(s) for warranty support shall be within 4 hours travel distance of El Paso International Airport, in the City of El Paso, State of Texas, where the equipment is to be located, as required by the City of El Paso.

E. Royalties and License Fees

1. Pay all royalties and license fees and defend all suits or claims for infringements of any prior or patent rights and save the City of El Paso harmless from liability, expense of loss on account thereof, with respect to any processes, devices, methods, articles, inventions, things or procedures used in the project.

F. Labor Warranty

1. Warranty support shall be provided as follows:

    a. Provide labor to accomplish any warranty repair work. In the event such labor is not provided in a timely fashion, pay the City of El Paso to accomplish warranty labor repair with its maintenance staff.

    b. Provide labor for work related to design deficiencies.

G. Parts Warranty

1. Terms

    a. Provide a parts warranty which states material and equipment furnished and installed shall be new and free from faults and defects in material, workmanship, detail or incorrect component selection; shall conform to the functional and technical requirements of this Section and Contract Drawings contained herein; shall comply with all laws, statutes, ordinances and codes applicable at the installation site; and shall be suitable for the intended purposes. Excessive wear shall be considered a defect within the provisions hereof.

b. Parts shall be shipped freight pre-paid to the location specified by the City of El Paso. Failed/malfunctioned parts shall be returned to the BHS Contractor, FOB, within ten (10) days of notification of detection of such failed/malfunctioned parts.

2. Spare Parts

a. Spare parts for each phase, shall be made available for purchase by the City of El Paso prior to the commissioning of the subsystem. The City of El Paso may, taking the recommendations of the BHS Contractor, purchase such spare parts as it deems necessary, and said parts, shall be stocked on the Airport property. Stock control shall be by the City of El Paso who shall grant reasonable access to the BHS Contractor's warranty service agency during the warranty period. All items withdrawn from stock shall be replaced, regardless of whether the item was purchased by the City of El Paso or the City of El Paso's Maintenance Group directly from the BHS Contractor or from a third party, pursuant to warranty services, within two weeks of such withdrawal.

b. Ending of the warranty period shall be contingent on the replacement of all stock withdrawn pursuant to warranty services whether the warranty service agency or the City of El Paso accomplished such services. Where the BHS Contractor has cause to believe that an item or items may require stocking pursuant to the terms and conditions of warranty provisions, which item or items the City of El Paso declines to stock, stock such items separately at no cost to the City of El Paso. In no case shall the absence of appropriate spare parts in the City of El Paso's spare parts stock be construed in any way to abridge or interfere with the responsibilities of the warranty services as defined herein.

H. Design Warranty

1. Terms

a. Provide a Design Warranty which states that the system, materials, equipment, software and high level and low level controls furnished and installed shall be free from faults and defects in design; shall conform to the functional and technical requirements of this Section and Contract Drawings contained herein; shall comply with all laws, statutes, ordinances and codes applicable at the installation site; and shall be suitable for the intended purposes. Excessive wear shall be considered a defect within the provisions hereof.

2. Design Failure

a. In the event a design failure occurs during the warranty period, replace all such components, assemblies or devices utilizing the design in a similar application in which the failure occurs by components, assemblies or devices redesigned to prevent such occurrences at no cost to the City of El Paso. Submit proposed redesign drawings and re-selected component designations to the City of El Paso for their approval. Issue a new warranty period upon the replacement of such redesigned items.

b. Components, assemblies or devices shall be considered as design failures if any of the following occurs during the warranty period:

1.) A leakage loss of over 10% of an operating fluid in any hydraulic assembly.

2.) A demand for frequent, unscheduled adjustment or other maintenance action in similar devices.

3.) Failure of a component to perform its specified function or a failure of a component to operate at its specified rate.

4.) Frequent activation of overload protection elements in similar devices.

5.) Loosening of anchoring or attachment provisions on similar devices.

6.) An increasing level of noise being generated by similar devices.

7.) A structural failure due to BHS supports, hangers, or headers.

8.) Inappropriate action of control or sensor elements during operational conditions.

9.) Occurrence of an accident or an imminent safety hazard revealed during operational conditions.

10.) Uncovering of a condition of specification non-compliance or degradation of specified functional requirements during the warranty period.

11.) More than 2 failures on one or more components or assemblies of components of similar construction or design, used in similar devices.

12.) More than 2 unscheduled replacements of an expendable component in similar devices.

c. The City of El Paso shall act to resolve any disputes regarding the definition of a design failure in a fair and equitable manner.

3. Period and Responsibility

a. If, within three (3) years from the date of Final Acceptance of the work, the work or the system, or any equipment, material or software is found, in any respect, not to conform to the Warranty set forth herein, within forty-eight (48) hours of notification by the City of El Paso, initiate the following series of steps in order to correct the deficiency:

1.) Determine the cause of failure.

2.) Prepare drawings showing recommended design changes and submit to the City of El Paso or its representative.

3.) The City of El Paso or its representative shall comment with a change request or approval.

4.) Make design changes if requested.

5.) After the City of El Paso or its representative has approved the design, all components of the system incorporating the same design deficiency shall be modified as agreed upon by the City of El Paso or its representative.

6.) The Parts Warranty period and the Design Warranty period shall start again for the changed item/system on the date that the design change has been incorporated if the make, manufacture or model is replaced.

- END OF PART I -

PART II - PRODUCT SPECIFICATIONS

2.02 ACCEPTABLE MANUFACTURERS

A. BHS Contractors

1. Subject to compliance with requirements, the following firms are qualified to perform as BHS Contractors for this Project:

a. Automatic Systems Inc., Kansas City, MO

b. Diversified Conveyors, Memphis, TN

c. Five Star Airport Alliance, Ogden, UT

d. Beumer / Glidepath LLC, Arlington, TX

e. Jervis B. Webb, Inc., Farmington Hills, MI

f. Pteris Global (USA), Inc., Irving, TX

g. Siemens Airport Logistics, DFW Airport, TX

h. Vanderlande Industries, Inc., Marietta, GA

B. BHS Equipment Subcontractors

1. Subject to compliance with requirements, the following firms are qualified to perform as component subcontractors for this project:

a. Five Star Airport Alliance, Ogden, UT

b. Beumer / Glidepath LLC, Arlington, TX

c. Jervis B. Webb, Inc., Farmington Hills, MI

d. Pteris Global (USA), Inc., Irving, TX

e. Siemens Airport Logistics, DFW Airport, TX

f. Vanderlande Industries, Inc., Marietta, GA

C. BHS Controls Subcontractors

1. Subject to compliance with requirements, the following firms are qualified to perform as BHS controls subcontractors for this project:

a. BCS Group, Auckland, NZ

b. Brock Solutions, Irving, TX

c. Control Touch Systems, Louisville, KY

d. Jervis B. Webb, Inc., Farmington Hills, MI

e. Pteris Global (USA), Inc., Irving, TX

f. Siemens Airport Logistics, DFW Airport, TX

g. Vanderlande Industries, Inc., Marietta, GA

D. BHS Equipment

1. In order to establish a minimum standard of quality and reliability, the following manufacturers have been listed for various components of the BHS.

2. Perform a thorough site survey of the existing systems and submit catalog cuts of all components that are to be utilized, identifying those components that cannot be matched for the City of El Paso or its representative

to review.

3. This list has been presented to establish this standard and the manufactures on this list shall not be perceived or construed as favored or preferred. This list shall, in no way, preclude other manufacturers, provided that their equipment and components have been reviewed by the City of El Paso or its representative and determined to be of equivalent or similar quality, functionality, and reliability. The City of El Paso or its representative's decision in this regard shall be final. The use of specific product manufacturers or models on previous projects that are not identified on the following list of approved equipment does not constitute pre-approval on this project.

   a. For Belting:

      1.) Ammeraal Beltech

      2.) B.F. Goodrich

      3.) Fenner/Dunlop

      4.) Goodyear Tire and Rubber Co

      5.) Habasit Belting, LLC

      6.) Midwest Conveyor Company, Inc. (Ashland Conveyor Products)

      7.) Morrison Company, Inc.

      8.) Siegling America, Inc.

      9.) Sparks Belting Company

   b. For Belt Lacing:

      1.) Clipper Belt Lacer Company

      2.) Or approved equal

   c. For Bearings:

      1.) Browning (Emerson Power Technologies)

      2.) Dodge (Baldor Electric Company)

      3.) Fafnir/The Timken Company

      4.) Sealmaster/Morse Industrial Corp. (SF, SFT, ST, STH Goldline or Sealmaster Material Handling (MH) Series)

      5.) SKF Bearing Services Company

   d. For Motorized Pulleys:

      1.) Rulmeca (Formerly Joki)

      2.) Van der Graaf (model UMV)

   e. For Power and Spiral Turns:

      1.) Flow-Turn

      2.) Portec, Flo-Master Division

      3.) Transnorm (Series TS1500)

   f. For Flat Plate Make-Up Devices:

      1.) Five Star Airport Alliance, Ogden, UT

      2.) Glidepath LLC

3.) Jervis B. Webb, Inc.

4.) Siemens Airport Logistics

5.) Vanderlande Industries, Inc.

g. For High Speed Paddle Diverters:

1.) Pteris Global (USA), Inc.,

2.) Siemens Airport Logistics

3.) Vanderlande Industries, Inc.

h. For 45 Degree Merges:

1.) Glidepath LLC

2.) Five Star Airport Alliance, Ogden, UT

3.) Jervis B. Webb, Inc.

4.) Portec, Inc.

5.) Siemens Airport Logistics

6.) Transnorm Systems

i. For Vertical Sorter:

1.) Five Star Airport Alliance, Ogden, UT

2.) Glidepath LLC

3.) Jervis B. Webb, Inc.

4.) Logan Teleflex

5.) Pteris Global (USA), Inc.,

6.) Sandvik Sorting Systems (as supplied by Fives Cinetic)

7.) Siemens Airport Logistics

8.) Transnorm

9.) Vanderlande Industries, Inc.

j. For Vertical Merge:

1.) Five Star Airport Alliance, Ogden, UT

2.) Jervis B. Webb, Inc.

3.) Pteris Global (USA), Inc.,

4.) Siemens Airport Logistics

5.) Vanderlande Industries, Inc.

k. For Control/Communication Products:

1.) Motor Starters:

a.) Allen-Bradley

b.) Cutler Hammer

c.) Square D (Type S) (For NEMA-only projects)

d.) Telemecanique (TeSYS U-Line Series)

2.) Programmable Logic Controllers (PLCs):

a.) Allen-Bradley

b.) Siemens

c.) Telemecanique-Modicon and Quantum series

3.) Photoelectric Controls:

a.) Allen Bradley

b.) Banner Engineering Corp

c.) Cutler Hammer

4.) Variable Frequency Drives (VFD):

a.) ABB (Model ACS 350)

b.) Allen Bradley/Rockwell Automation

c.) Nord Gear (motor mounted only)

d.) SEW Eurodrive

e.) Telemecanique (Altivar Series)

l. For Motor Control Panels (MCP Cabinets):

1.) EMF Company, Inc

2.) Hoffman Engineering Co.

3.) Rittal Corporation

m. For Motors:

1.) Baldor

2.) LeRoy Somers (Part of Emerson Motor Technologies)

3.) Nord Gear

4.) Reliance Electric (Part of Baldor Electric Company)

5.) SEW Eurodrive

6.) U.S. Motors (Part of Emerson Motor Technologies)

n. For Reducers (shaft mounted):

1.) Browning (Part of Emerson Power Transmission)

2.) Dodge ("TXT" ABHS Series) (Part of Baldor Electric Company)

3.) Link Belt, Inc.

4.) Nord Gear

5.) SEW Eurodrive

6.) Sumitomo

o. For Reducers (foot-mounted or base-plate mounted):

1.) Link Belt, Inc

2.) Reliance Electric (in-line, helical gear type) (Part of Baldor Electric Company)

3.) SEW Eurodrive

4.) Sumitomo

5.) Emerson Power Transmission

p. For Roller Chains:

1.) Acme

2.) Diamond Chain Company

3.) Dodge

4.) Morse Industrial (part of Bearing Distributors, Inc)

q. For Rollers and Pulleys:

1.) Precision, Inc

2.) The Chantland Company

r. For Ticket Counter Scales:

1.) ATRAX

2.) Division Systems

3.) Emery Winslow Scale Co.

4.) Fairbanks Scales

5.) General Electronic Systems, Inc.

6.) Triner/Triple Scale & Mfg. Co. Inc.

s. For Scanner Arrays:

1.) Accu-Sort Systems, Inc.

2.) Datalogic

3.) SICK Auto Ident, Inc.

t. For Hand Held Bar Code Scan Guns:

1.) PSC, Inc. (part of Datalogic)

2.) Symbol Technologies, Inc. (Part of Motorola)

u. For Baggage Dimensioning Scanners:

1.) Accu-Sort Systems, Inc.

2.) Mettler Toledo

3.) SICK Auto Ident, Inc.

v. For Signaling Devices (audible alarms):

1.) Allen Bradley

2.) Edwards Co. Signaling Products Div.

3.) Federal Signal Corporation

4.) Mallory Company

w. For Signaling Devices (visual alarms):

1.) Allen Bradley

2.) Cooper Crouse-Hinds

3.) Federal Signal Corporation

x. For Uninterrupted Power Supply (UPS):

1.) APC

2.) Eaton Powerware

3.) Leibert (Part of Emerson Network Power)

y. For Draft Curtains:

1.) TRAX Industrial Products

2.) Akon

3.) Aleco

z. For Powered Fire/Security Doors:

1.) Raynor

2.) The Cookson Company

3.) Vigneaux Corporation

aa. For Soft Start Devices:

1.) Allen-Bradley

2.) Nordic

3.) Reuland Electric

bb. For Hour Meters:

1.) ENM Company

2.) Hobbs Corporation

cc. For Power Regulators:

1.) Sola/Hevi-Duty Electric

2.) Acme

dd. Network Switches/Firewalls/Routers:

1.) Cisco Systems, Inc.

2.) Netgear

3.) Linksys

ee. Computer/Server Equipment:

1.) Dell Computer Corporation

2.) Hewlett-Packard

2.03 MATERIALS

A. General

1. All welding and qualification of welders shall comply with AWS D1.1.
2. All fasteners shall be zinc-plated, cadmium plated or stainless steel. All fasteners shall be locked with lock nuts or lock washers.

B. Material

1. Structural Steel: ASTM A-36
2. Stainless Steel (Trim): AISC Type 304 with #4 Brush Finish
3. Plywood (FR-S Rated Fire retardant): Interior Type A requirements in AWPA Standard C-27.
4. Lumber (FR-S Rated Fire retardant): Interior Type A requirements in AWPA Standard C-20
5. Rubber/Neoprene: ASTM D-2000

2.04 FABRICATION

A. General

1. Fabricate equipment-using steel clean and free from rust, rust pits, kinks and sharp bends. Use forming methods that will not fracture or otherwise damage the metal. Remove burrs, sharp edges, and sharp corners. Smooth all joints and round all corners. Align joints in components to ensure smooth conveyance of baggage.
2. Holes in metal side guards for photocell beams are to be "punched", not burned, and tapered from the inside (wide) to the outside (narrow).
3. When two sections of conveyor bed meet, these joints shall be chamfered to ensure that there is no step-up condition between bed sections.

2.05 BELT CONVEYORS

A. Belting

1. General
   a. All conveyor belting shall be flame retardant according to ISO 340, DIN 22103, ASTM D-378 and NFT-47108 or equal.
   b. Belt widths shall be 3" less than the between frame (guard) dimension unless otherwise specified.
   c. Ensure that no belt slippage occurs in order to meet all tracking performance requirements specified herein.
   d. The actual length of belting installed on each unit shall be included on the system's drawings and in the spare parts list.
   e. Ensure all ratings for proposed belting designated for exterior use exceed the local environmental weather conditions.
   f. Submit cut sheets for all types of belting being proposed for this project for review and approval by the City of El Paso or its representative.
2. Conveyors
   a. For level, general purpose baggage handling applications such as load, unload transport and inclines/declines of 7° or less use two ply urethane impregnate, solid woven fabric polyester or bare by bare (if not exposed to the public), top face of 0.02" PVC, smooth (public areas), maximum coefficient of friction of 0.3 with elongation of 1% maximum rated tension. For load conveyors provide belting that is flat lying, roll resistant and cut/wear resistant.
   b. For incline and decline conveyors of greater than 7° use 0.08" PVC two ply urethane impregnate, solid woven fabric polyester or bare by bare, rough top, maximum coefficient of friction of 0.25 with elongation of 1% maximum rated tension.

c. For incline and decline conveyors or other locations where bag slippage may occur, the use of longitudinal rough top belt may be used. Habasit Trackmate, model 135 LR (or approved equivalent), shall be used.

3. Power Turns: Provide belts for power turns suitable for the application, as provided by the power turn manufacturer.

4. Spiral Turns: Provide belts for spiral turns suitable for the application, as provided by the spiral turn manufacturer.

5. 45° Merges: Provide belts for merges suitable for the application as provided by the merge manufacturer.

6. Vertical Sorter/Merge: Provide belts for sorters/merges suitable for the application as provided by the vertical sorter/merge manufacturer.

7. HSPDs: Provide belts for HSPDs suitable for the application as provided by the HSPD manufacturer.

B. Belt Splicing

1. Lacing

a. All belt lacing (except for power turns) shall be of the Clipper "Unibar" type with a minimum #2 hook-type of the size recommended by the belt manufacturer for the belt being used. When cutting belts for proper length, sufficient material shall be allowed for take-up pulleys to be at a maximum of one-half the take-up distance with the belt running.

b. Belt lacing for power turns shall be of the Clipper type with either #1 or #1A hook-type of the size recommended by the belt manufacturer for the belt being used or as recommended by the power turn manufacturer. When sizing belts for proper length, sufficient material shall be allowed for take-up pulleys to be at a maximum of one-half the take-up distance with the belt running.

c. Belting and related hardware must be trimmed in a 1" deep "V" notch fashion, lacing connecting pin must be either enlarged by heating lacing connecting pin nylon jacket or bent 90° to prevent lateral movement of the pin.

d. Belt lacing for applications in 45° merge conveyors shall be of the Clipper brand type of fastener.

e. Belt lacing connecting pins for the Clipper type-lacing materials shall be of the nylon covered steel cable type of appropriate diameter for the lacing hooks being used.

f. All rough top belting to be ground smooth within 1" of the cut end to allow proper seating of the belt lacing

C. Pulleys

1. General

a. All shafts shall be designed to CEMA standard No. 402-1992 and all subsequent revisions. Shafts are to be AISI 1018 steel, polished and ground and within tolerances for the associated bearings.

b. All pulleys are to be dynamically balanced. Rollers of eccentric material, such as standard pipe, are to be dynamically balanced.

c. Run-out:

1.) The maximum shaft run-out of all assembled pulleys, shafts and bearings under a no-load condition, measured from the centerline of the bearing to the end of the related shaft furthermost from the conveyor, shall not exceed .0075" per inch.

2.) The maximum run-out of any pulley shell shall not exceed .060".

d. Machining:

1.) Swaged:

a.) Pulleys shall be 10-gauge (minimum) thickness with 3/8" (minimum) thick end plates.

b.) End pulleys are to be swaged between centers to create a trapezoidal face with a taper from the pulley end to a minimum 25% of the pulley length thereby having 50% of the pulley flat in the center.

2.) Machined:

a.) If end pulleys are machined (not swaged) using Schedule 40 pipe, center plates must be made from 1/2" thick steel plate and shall have bored centers to facilitate a slip fit on the shaft.

b.) Pulleys are to be turned between centers to create the crown or trapezoidal. Pulleys shall be crowned from each outer end to within 1/2" of the centerline leaving 1" straight but turned true to standard thickness required for each pulley application. When welding is involved, turn the assembly after welding to true the weldment and create the crown/trapezoidal.

c.) The recommended minimum wall thickness after crowning or trapezoidal shall be as follows:

Pulley Diameter	Minimum Wall Thickness
8-5/8"	5/32"
12-3/4"	7/32"
16"	11/32"
18"	11/32"

e. Hub plates shall be made from 3/8" (minimum) thick steel plate turned and bored to fit on the shaft or have a taper locking hub arrangement welded in the end plate.

f. All pulleys shall be manufactured for high-speed application.

g. All bearings shall be supplied pre-lubricated and sealed for life with plugs inserted into the grease fitting bore. Bearings are to be secured to their respective shafts with an approved form (as specified in the submittal procedure) of eccentric or squeeze locking type collar arrangement.

2. Powered Pulleys

a. Drive pulleys

1.) All drive pulleys for intermediate-type drives shall be lagged with vulcanized lagging of 70 Durometer rating with a minimum thickness of 3/8". Lagging material on individual pulleys shall be compatible with the type of belting used on the associated conveyor. Examples of lagging material are as follows:

a.) Minimum 70 durometer carboxiled nitrile

b.) Minimum 70 durometer thermo-set urethane

2.) Powered pulleys shall be steel, crown faced, flat faced, or trapezoidal (per the belting manufacturer's recommendation), shall be equipped with taper-lock type hubs with 1-7/16" minimum diameter shafts mounted in eccentric locking-type or squeeze locking type precision and ground flange-type ball-bearing units.

3.) The minimum acceptable belt wrap on drive pulleys shall be 210°.

4.) Drive pulleys for end-type drives must be lagged with a minimum 3/8" thick vulcanized lagging of 70 durometer, again using lagging material compatible with the type of belting used on the associated conveyor. In addition, powered pulleys shall be 6" with taper lock hubs with 1-7/16" minimum diameter 1018 TGP (turned, ground and polished) steel shafts mounted in eccentric locking type precision and ground flange ball bearing units.

5.) Drive pulley and shaft sizes shall be determined by maximum belt pull. The following are provided

as examples:

a.) Light-Duty: 250 lb. maximum belt pull. Consists of a 6-3/4" minimum diameter drive pulley with a 1-7/16" minimum diameter shaft. Bearings mounted with two bolts can be used with light duty applications.

b.) Normal-Duty: 500 lb. maximum belt pull. Consists of an 8-3/4" minimum diameter drive pulley with a 1-11/16" minimum diameter shaft. Roller chain, if used, shall not be less than RC - 60. Bearings mounted with two bolts can be used with normal duty applications.

c.) Intermediate-Duty: 1000 lb. maximum belt pull. Consists of a 10-3/4" minimum diameter drive pulley with a 1-15/16" minimum diameter shaft. Roller chain, if used, shall not be less than RC - 60. Bearings mounted with four bolts are to be used with intermediate duty applications.

d.) Heavy-duty: 1,500 lb. maximum belt pull. Consists of a 12-3/4" minimum diameter drive pulley with a 2-7/16" minimum diameter shaft. Roller chain, if used, shall not be less than RC - 80. Bearings mounted with four bolts are to be used with heavy-duty applications.

b. Motorized Pulleys

1.) The reduction gears and motors associated with power driven pulleys shall be mounted in an oil bath for lubrication and heat dissipation. The design of the pulley shall permit the lubrication oil level to be checked without dismounting or removing the drum motor from the conveyor frame. The lubricant shall be rated for 10,000 hours of life. Gears shall be hardened and ground steel alloy.

2.) In addition, drums shall be machine crowned and lagged to facilitate belt tracking. Lagging material on individual motorized pulleys shall be compatible with the type of belting used on the associated conveyor.

3.) Power: The power supply shall be connected directly to the starter without the use of slip rings and brushes. The terminal board housing (if used) must be capable of being rotated 180°to facilitate the direction of cable inlet.

3. Non-Powered Pulleys

a. Snub Pulleys

1.) Snub pulleys are to be installed on all conveyors at all points where the slack portion (non-load carrying portion) of the conveyor belt makes a change in vertical or horizontal direction. At a minimum, such points of vertical or horizontal change shall include:

a.) Points immediately adjacent to head, tail, take up and drive pulleys.

b.) Points on the underside of any conveyor where the belt bends vertically or horizontally (nose-over sections).

2.) All snub rolls shall be a minimum of 4" in diameter and equipped with fixed (welded) 1-7/16" minimum diameter shafts mounted in eccentric locking-type or squeeze lock type precision and ground flange-type ball-bearing units.

3.) Bearings are to be secured to their respective shafts with an approved form (as specified in the submittal procedure) of eccentric or squeeze locking type collar arrangement.

4.) All snub rollers used for belt tracking shall be equipped with jacking bolts to facilitate adjustment. Jacking bolts must be equipped with jam nuts to prevent the jacking bolts from loosening.

b. Take-Up Pulleys

1.) All take-up pulleys shall be steel, crown faced, flat faced, or trapezoidal (per the belting manufacturer's recommendation), and at a minimum 4" in diameter. Take-up pulleys are to be equipped with taper-lock type hubs or squeeze lock type and 1-7/16" minimum diameter shafts mounted in eccentric locking-type precision and ground flange-type ball-bearing units. Pulleys

must be mounted on threaded take-up devices with steel guides and have a minimum allowable adjustment of 10" (6" on conveyors less than 12' in length).

2.) All conveyors shall be provided with take-ups for field adjustment of 2% of the conveyor bed length. Take-ups shall be an integral part of the drive frames on all intermediate-drive conveyors.

3.) Automatic take-up devices shall be installed:

a.) On all conveyor sections in excess of 60' in length

b.) On conveyors which operate outside the building or are subject to extreme temperature and humidity changes.

c.) In areas where belts are subject to stretch/shrinkage that will cause weekly adjustment.

4.) Spring take-ups are not acceptable. Design of the pulleys shall be subject to by the City of El Paso or its representative's approval.

5.) Take-ups used in heavy-duty or high-speed applications shall be a minimum of 6" in diameter with a minimum 1-7/16" diameter shaft and shall otherwise comply with the above specifications.

6.) Bearings are to be secured to their respective shafts with an approved form (as specified in the submittal procedure) of eccentric or squeeze locking type collar arrangement.

7.) All take-up pulley bearing adjustors are to be chain coupled so that both bearings are tightened and slacked in equal increments. All belt lengths shall be adjusted so that the respective take-up pulley adjustments shall permit a further adjustment of 85% before the belt length needs to be shortened. The 15% maximum adjustment of the take-up pulley adjusters shall have been accomplished prior to Acceptance Inspection and Testing.

c. Head and Tail Pulleys

1.) All non-powered head and tail pulleys shall be steel, crown-faced or trapezoidal and equipped with taper-lock type hubs. Pulleys shall be equipped with shafts having a minimum diameter of 1-7/16" mounted with eccentric locking-type precision and ground flange type ball bearing units. All head and tail pulleys shall be a minimum of 6" in diameter x #10 gauge wall. In addition, all head and tail pulleys shall be of a single-piece construction having steel end discs attached to the rim by continuous welding.

2.) Slider beds shall be arranged to minimize the gap between the end section and the end pulley such that the gap does not exceed 1" with a 1/2" design objective.

3.) All head and tail pulleys used for belt tracking shall be equipped with jacking bolts to facilitate adjustment. Jacking bolts are to be equipped with jam nuts to prevent the jacking bolts from loosening.

4.) Bearings are to be secured to their respective shafts with an approved form (as specified in the submittal procedure) of eccentric or squeeze locking type collar arrangement.

5.) Finger Safety Guards:

a.) All end pulley rollers in staffed areas (load conveyors (public and non-public areas) or run out conveyors) shall be narrower than the belt width by a distance not less than two times the difference between the belt width and the between-guides width of the conveyor (usually 6 inches).

b.) A securely fastened steel finger guard matching the radius of the end roller shall take up the remaining width on each side of the roller. Ensure that the outer surface of the finger guards are smooth and that the junctions between the finger guards and the slider bed and that between the finger guards and the pulley do not subject the belting to any undue damage or wear. Attachment of the finger guards shall be such that the guards will move with the pulley when it is adjusted, therefore ensuring proper alignment.

c.) At the tail end of load belts, pulleys shall also be covered with a removable metal shroud located just above, but not in contact with, the conveyor-belting surface. Where exposed to public view, these pulley shrouds shall be constructed of stainless steel matching that used on their respective conveyors (type 304 stainless steel with #4 brushed satin finish, unless otherwise specified).

d.) Submit to the City of El Paso or its representative the proposed finger safety guard design for review and approval.

4. Return Rollers/Idlers

a. Return rollers shall be constructed from 12-gauge steel and must be full-faced with a minimum 2-1/2" diameter equipped with an 11/16" hex axle for belt speeds up to 150 fpm and a minimum of 3-1/2" in diameter with a 11/16" hex axle for belt speeds above 150 fpm.

b. In locations that require a noise level of 65 dB (A) or less, such as the public areas, use return rollers/idlers with female threaded spindles attached to the conveyor frame and bolted connections. Do not use spring loaded rollers.

c. All hex shaft return idler rollers shall be equipped with sealed, permanently lubricated, caged, semi-precision type ball-bearings. Return idlers shall be located on centers not exceeding 10', with spacing being reduced in areas where belting may drag against the floor or conveyor structure. The shafts shall be mounted to the conveyor bed with adjustable retainers for proper belt tracking.

d. Provide two return rollers spaced on 5'-0" centers in each 10'-0" intermediate section from which lateral diversion of baggage takes place. Center the return rollers on the associated diverter.

e. Return rollers must not be used at snub points.

f. Provide a minimum of one return roller per 10'-0" section. The position of the return rollers shall assure that the return belt is routed and supported so that it does not contact any stiffening members. Mounting for the end of each return roller shall be adjustable for belt tracking.

g. For application where conveyors are exposed to inclement weather, provide a minimum of one return roller every 5'-0" on center on load and transfer belts to help the conveyors start when wet or frozen to the bed. The position of the return rollers shall ensure that the return belt is routed and supported so that it does not contact any stiffening members. Mounting for the end of each return roller shall be adjustable for belt tracking.

h. Provide return roller finger guards at all possible return roller mounting positions where accessible by personnel.

5. Tapered Rollers

a. To facilitate changes of direction up to 15°, 5° tapered rollers having a large end diameter not less than 6" with shaft size not less than 1" shall be installed. The number of required rollers is determined by dividing the angle of directional change by 5.

b. Tapered rollers are to be slave driven from the powered tail pulley of the adjacent downstream conveyor. The tail pulley used to drive the tapered roller must be lagged. Lagging material on individual pulleys shall be compatible with the type of belting used on the associated conveyor.

c. Tapered roller units are to be installed with conveyor under-pans and guards as specified elsewhere.

d. To minimize the gap between a tapered roller and the adjoining conveyor, ensure the conveyor end roller is extended a minimum of 1/8" beyond the frame.

D. Drive Assemblies

1. Submit to the City of El Paso or its representative for approval a schedule of all drive assemblies showing configuration of motor and reducer assembly. The selection of the drive assembly shall be based on efficiency, low noise, sized for the application, achieves long service life and has low maintenance.

2. End-type drive units may be used for conveyors 25' or less in length, with intermediate drives used for conveyors over 25' long.

3. The configuration of the drive assembly motors and reducers shall be based on a direct shaft mounted speed reducer and gear box design to simplify the installation, and maintenance of the equipment, noise levels, and spare parts considerations. The selection of the drive assembly shall be based on efficiency, low noise, sized for the application, achieves long service life and has low maintenance.

4. The use of a non-direct shaft mounted speed reducer and gear box design shall only be permitted in select locations upon the review and approval of the City of El Paso.

5. For conveyors in areas with a maximum noise level of 65 dB (A) or less (such as OSR, public areas), use either shaft mounted drives or underslung drives with toothed belts (no chain drives) to minimize noise levels

6. To achieve maximum drive aisle clearance (minimum 8' – 0" from finished floor to bottom of conveyor or overhead support structure) under the conveyor, the Contractor is permitted to utilize a low profile drive configuration (in addition to a side clip support attachment configuration, if required) only in locations over drive aisles where a standard profile drive configuration would impact the above drive aisle clearance. Submit drawings showing those areas where a low profile drive configuration shall be utilized to the City of El Paso for approval.

7. Motors:

   a. The conveyors shall be driven by AC induction motors (except where motorized pulleys are used). The motors shall conform to AIEE, NEC and NEMA standards. These motors shall be equipped with two-groove minimum, taper-lock type hubs, and "A" or 3VX -belt sheaves.

   b. Motors shall be sized for maximum load and belt speed requirements under continuous operation (minimum of 1 HP unless approved by the City of El Paso or its representative) and, where applicable, shall be capable of withstanding shock caused by frequent starting and stopping under full load conditions. Motor FLA will be measured with full load during load tests and any motor that draws more than the name plate FLA (after start up in rush current has flattened) must be replaced with a motor of appropriate size that will result in no more than the max name plate FLA during load test.

   c. Motors shall also be of the constant speed (nominally 1800 RPM), continuous service, and ball-bearing type with a minimum of class "F" insulation. For 2hp motors and smaller class "B" insulation shall apply.

   d. If overrun is critical to system control operation (i.e., wherever baggage tracking is required), motors shall be equipped with automatically applied brakes to prevent overrun after the motors are de-energized.

   e. With the exception of "High-Slip" design motors, for applications that require dual drives, and motors that are controlled by "VFDs", all of the BHS motors shall be copper-wound NEMA Design "B" open drip proof or TEFC with Class F insulation, utilize a "T-frame" base, and shall be provided with overload protection in the motor control panel. These motors shall have a minimum of 1.15-service factor. High-Slip Motors are required by specification where the use of dual drives is used. These motors shall be copper-wound NEMA Design "D", Class "H" Insulation at 1.0 Service Factor with Class "F" temperature limits. Inverter Duty or Inverter Ready Motors shall be used at "VFD" controlled applications. These motors shall be copper-wound NEMA MG1, Part 31 Rated Design "B", Class "H" Insulation at 1.0 Standard Service Factor with Class "H" temperature limits. All motors shall be of the "high efficiency - low energy" type.

   f. All motors shall meet the following criteria:

      1.) Low noise

      2.) Removable conveyors (e.g. EDS device in feed and exit conveyors) shall be equipped with heavy-duty quick couplings for electrical connections

      3.) Fitted with low noise fan reduction guard or equivalent.

g. Motor size selection shall be based on the design load and friction coefficient requirements as described in these specifications. Motor size shall not exceed 7½ HP, unless otherwise approved by the City of El Paso or its representative. Use minimum 1 horsepower motors (unless other specified or approved by the City of El Paso or its representative). All drive motors shall be provided in 1, 1½, 2, 3, 5 or 7½ horsepower. Size conveyor equipment drive motors to permit start-up under full load conditions at the specified frequency of start-up cycles per minute without exceeding a temperature rise of 68°C based on an ambient temperature of 40°C. Provide motors designed for 480 VAC, three phase, 60-Hertz operation.

h. C-faced motors (with VFD control) can be utilized. Such usage shall be coordinated with the City of El Paso or its representative.

i. Motor mounts shall be equivalent in function to Dodge Type "A" slide motor bases with bolt holes drilled and tapped, or tack-welded nuts under the holes in the top portion of the mounting plate. Use of loose nuts to hold the motor mount is unacceptable. Provide jacking bolts to resist effect of belt or chain pull on foot mounted motors.

j. On all belts with frequent start/stop operations, such as indexing belts, all motors shall be continuous-running NEMA-B design, coupled with VFD control.

k. In the case where the conveyor line configuration, related controls and baggage input/processing are directly associated with the EDS or is in a tracking zone, the conveyor shall be equipped with a VFD.

8. Reducers

a. Shaft-mounted reducers shall be attached with tapered type bushings or full length bore with keyway.

b. Reducers shall be sized for a Class II application (minimum). Based on actual motor horsepower, the service factor required to obtain an L10 life of 70,000 hours shall be as follows:

1.) For reducers utilizing ball bearings the service factor used shall be 2.4

2.) For reducers utilizing roller bearings the service factor used shall be 2.2.

c. Reducers shall have adequate provisions for drain, fill, inspection ports and sight gauge. The manufacturer's recommended lubrication shall be attached to the reducer by means of a riveted, or bolted stamped metal tag. All units shall be installed with proper lubrication and vent plugs intact upon start-up of conveyor.

d. Reducers used on inclines where roll-back would be critical shall be equipped with “backstop" devices or brake motors.

e. All bearings within the reducer shall have a minimum L-10 life of 70,000 hours based on service factor and loading of conveyors, and on the manufacturer's published data showing load rating of each bearing used.

9. General Drive Requirements

a. Where applicable, all gear reducer-mounting frames shall be fabricated from 1/4" thick steel "C" channels. The mounting frame shall be so designed to allow bolting to both the bottom and sides of the conveyor bed. The mounting frame shall be a totally separate weldment that can be unbolted to allow for installation as either a right or left hand drive. The mounting frame shall span the full width of the conveyor bed and attach to both sides of the bed frame.

b. Electro-mechanical brakes, if required, shall be internally mounted. The stopping torque shall be at least equal to the starting torque of the motor.

c. The drive unit shall be provided with a factory warranty for 2 years or 15,000 operating hours, whichever is longer.

10. Mounting

a. C-Faced

1.) In-line foot mounted reducer is an acceptable mounting method.

2.) The C-faced configuration with VFD control used on conveyors capable of continuous stop/start operation (i.e. queues or indexing conveyors) shall be capable of a minimum of 60 continuous start/stop operations per minute in an unloaded condition.

b. Foot Mounted or Base-Plate Reducer and Motor Mount

1.) The gear reducer shall be mounted on a fully adjustable mount. To allow for fast, easy motor and gear reducer replacement and adjustment, the mount shall be designed as follows:

a.) The mount shall be a two-piece assembly:

(1.) The bottom portion can be bolted or welded to the mounting frame (as specified above).

(2.) The top portion shall be designed to slide over the bottom portion and be adjustable via a single bolt adjustment. The top of the motor mount shall have bolt holes drilled and tapped to accept the layout pattern as the gear reducer mounting feet or the multi-mount feet.

b.) Use of tack-welded nuts under the holes in the top portion of the mounting plate shall be acceptable in lieu of tapped holes; however, the use of nuts to hold the motor in place shall not be acceptable.

c.) The purpose of this design is to allow replacing the motor by using an extension and properly sized socket from above without having to hold locking nuts.

d.) Use of Dodge Type “A” Slide Motor Bases is recommended, or an approved equal, for this application.

e.) All drive units shall be equipped with a suitable guard of "clamshell" design with tamper-proof fasteners, and fabricated from a minimum of 16-gauge steel. All guards shall comply with applicable OSHA standards and have an expanded or slotted metal-screened window to allow belt inspection without removal of the guard.

11. All drive motors and reducers shall be equipped with drip pans. The drip pan shall be constructed out of minimum 14-gauge steel. The drip pan shall be appropriately mounted such that the pan must be secured in the horizontal attitude and shall not impact maintenance access.

12. Whenever possible, all drive sprockets and V-belt sheaves shall have a taper-lock type of hub construction, with keyways. When keyways are used, they shall be secured by two sets of screws, one on top of the other to ensure positive locking of keyway. Sprockets shall be steel with a minimum of thirteen Type B form teeth.

13. Driving and driven sheaves shall be (minimum) two-groove "A" or 3VX section sheaves with taper-lock type hubs.

14. Roller chain shall be compatible with the torque and horsepower requirements of the application and shall be RC-60 minimum size. The roller chain ends shall be connected with a removable connecting link.

15. All pulley and sprocket adjustments provided for the purpose of adjusting belt tension, belt tracking, drive chain tension, and drive chain alignment shall incorporate a positive means of adjustment and restraint (i.e., tensioning screws and locking nuts). Slotted holes for mounting bolts shall not in themselves be considered satisfactory.

16. Chain drive sprockets shall be designed for a sprocket ratio between the driven and drive sprockets as close as possible to 2:1, but not less than 1.5:1 or greater than 2.25:1. The maximum size for driven and drive sprockets shall be 35 and 18 tooth respectively. Wherever possible within the standard range of stock Taper lock-type sprockets, hardened tooth sprockets shall be provided.

E. Flexible Couplings

1. Mount coupling hubs to their respective shafts with keys and two setscrews, one of which shall be over the key and the other 90° from the key. When keyways are used, they shall be secured by two sets of screws, one

on top of the other to ensure positive locking of keyway. The use of a screw-locking compound in lieu of two – (2) setscrews is acceptable.

2. Select the coupling so as to permit the replacement of internal parts without removal of the motor or reducer.

F. Intermediate Sections

1. Provide conveyor frames capable of supporting a uniform load as specified with supports at a maximum center distance of 10'-0".

2. Construct the slider bed shell of 12-gauge minimum hot rolled steel and designed to present a smooth surface to the belt. The slider bed shall be well braced for rigid construction with the side frames a minimum of 6" x 1-1/2" channel or equivalent. A minimum of 1 1/4" x 1-1/4" x 3/16" angle stiffeners shall be welded to the underside of the slider bed at a maximum center distance of 3'-4" on transport conveyors and 2'-6" centers on load conveyors. Butt-coupled joints shall be provided.

3. When two – (2) sections of slider bed meet, both sections shall have chamfered slider bed lips to ensure that there are no step-up conditions between slider beds.

G. Floor Supports

1. Provide floor supports for conveyors located within 7'-6" of the floor or any mezzanine that is shown on Contract Drawings. Locate floor supports at intermediate section splices or within 1'-0" of intermediate section splices at 10'-0" maximum spacing.

2. Supports shall be on 5'-0" centers on loading/unloading conveyors and on 10'-0" maximum centers elsewhere. In all cases, each bed joint shall be supported.

3. All floor supports shall be of an “H” type design (i.e. two legs with a horizontal brace member) with vertical field adjustability of +/- 3". Floor support vertical members shall be constructed of 10 gauge, hot rolled formed steel channel with 10 gauge, hot rolled steel universal foot and head plates.

4. All conveyor floor supports shall be secured to the floor with a minimum of two (2) anchoring devices per leg (e.g., stud expansion anchor bolts).

5. All conveyors shall be adequately sway braced in order to ensure that there is no lateral or longitudinal displacement.

6. All support structure must be designed and installed so that maintenance access to the conveyor components and access to catwalks, work areas and drive aisles are not blocked.

7. The location of the floor support shall not impede the installation/removal of the conveyor gap pan.

H. Overhead Supports

1. Accept responsibility for the design and structural integrity of all bolts, hangers, and support structures, and is to provide all necessary materials required for installation.

2. Provide overhead supports for conveyors located 7'-6" or more above the floor or any mezzanine that is shown on the Contract Drawings. Locate overhead supports at intermediate section splices or within 1'-0" of intermediate section splices at 10'-0" maximum spacing.

3. All supports shall not exceed a 10'-0" maximum on-center spacing. In all cases, each bed joint shall be supported.

4. Ceiling hangers of threaded rod shall have a minimum diameter of 3/4" with structural angle, channel, Unistrut or pipe sills. The hangers shall have provisions for anchoring to the building structure and header steel. A Structural Engineer must approve all hanger supports.

5. Threaded rods shall have a lock washer, a single flat washer, and a single nut above and below any header steel channel assembly. A 4” x 4” x ¼” minimum steel support plate shall be used on the load bearing side of the header between the channels and flat washer.

6. All conveyors shall be adequately sway braced in order to ensure that there is no lateral or longitudinal

displacement, providing a rigid and rugged installation. Spacing must not exceed 20'-0".

7. Installation and layout of header steel and all support structure shall not pose interference to maintenance and operation access.

8. Repair/replace both new and existing fireproofing materials removed to allow the installation of BHS equipment header steel and support structures.

9. Equip all hangers with vibration isolators to ensure that there is no noticeable vibration transmitted to the building. Submit the proposed type of vibration isolator for review and approval by the City of El Paso or its representative.

10. Where catwalks are specified, the conveyor and adjacent catwalks shall be supported by a double sill configuration wherever possible without inhibiting maintenance and operational access. A single sill application is permissible at specific locations as approved by the City of El Paso or its representative.

11. To achieve maximum drive aisle clearance under the conveyor, utilize a side clip attachment configuration for the conveyor hanger to support the bed section instead of a sill type application. Submit drawings showing those areas where a side clip attachment configuration is to be utilized to the City of El Paso or its representative for approval.

I. Safety Guards

1. Provide and install conveyor under-pans on conveyors with clear heights between 18" and 7'-6" above the floor or within an envelope around a catwalk defined as 7'-6" high and 4' wide on either side of such catwalk. Fabricate under-pans of either solid sheet metal or expanded metal at least 14 gauge thick and fasten to the conveyor intermediate section. The under-pans, regardless of type shall be hinged without a removable pin on one side and provided with tamper proof fasteners on the opposite side for easy maintenance access, with appropriate tools; the pin shall have a lanyard attached to reduce potential of losing the pin. Sheet metal screws will not be accepted.

2. Protect all exposed moving parts of conveyors, such as, but not limited to, pulleys, rollers, lower or return belts, shafts and couplings less than 7'-6" above the floor or within an envelope around a catwalk defined as 7'-6" high and 4' wide on either side of such catwalk. The guards shall be made of sheet metal not less than 14 gauge thick, and secured with tamper proof fasteners for easy maintenance access, with appropriate tools.

3. Install appropriate safety guarding secured with tamper-proof fasteners on all exposed parts associated with the conveyor drive's rotating shaft and direct drive gearbox, in compliance with OSHA Standards 1910.219. Ensure that the proposed safety guarding does not restrict maintenance access and it is easily removable with appropriate tools, as the location requires, for maintenance access.

4. Protect all exposed parts of conveyors, such as, but not limited to, pulleys, rollers, lower or return belts, shafts and couplings within the CBRA with a metal shroud on both sides of the conveyor segment(s) to protect the TSA's staff from the exposed moving parts, dampen the noise generated by the conveyor equipment within the CBRA, and to prevent items from falling under the clear and suspect bag conveyors. The guards shall be made of sheet metal not less than 14 gauge thick, and hinged and pinned for easy maintenance access. Fasten with tamper-proof fasteners with captured nuts or similar means of avoiding losing parts.

5. Enclose all drive chains and belts using sheet metal protection covers at least 16 gauge thick. Hinge the covers at one end for ease of maintenance and size the covers with sufficient clearance to prevent contact to chains and belts. Fasten with tamper-proof fasteners with captured nuts or similar means of avoiding losing parts.

6. Eliminate or round unguarded exposed sharp corners and edges of items such as, but not limited to, support legs, braces and trim, to prevent injury to personnel or damage to their clothing. Locate no overhead steel framework, conveyor part, or support structure less than 8' above any catwalk, ramp or stair tread nose. If due to building constraints, support structure is less than 8', the structure, framework, and supports shall be encased in padding, identified with safety marking (yellow/black stripped tape) and a prominently positioned low overhead warning sign.

7. Install tamper proof fastened bearing covers on all exposed rotating shafts in workstation areas and in all

maintenance areas with catwalks. Workstation areas shall, at a minimum, include sort devices/conveyors, load conveyors, CBRA work areas and EDS work areas. Install appropriate safety guarding on all exposed parts associated with the conveyor drive's rotating shaft and direct drive gearbox, in compliance with OSHA Standards 1910.219. Ensure that the proposed safety guarding does not restrict maintenance access and it is easily removable with appropriate tools, as the location requires, for maintenance access.

8. Install tamper proof fastened finger guards on all Return/Idler Rollers on conveyors not equipped with under-pans.

9. For conveyors in areas with a maximum noise level of 65 dB (A) or less (such as ORS, public areas), mount all guards with rubber isolation washers or strips (as applicable) between sideguards and the conveyor frame to minimize noise levels.

10. Gap pans must be provided and installed on all conveyor-to-conveyor junction points or transfer locations, where there is any likelihood of small objects falling to the floor, mezzanine or catwalk. Gap pans must be solid sheet metal not less than 12 gauge, unless otherwise approved by the City of El Paso or its representative, with minimum 2-inch high sides on the edges. The gap pan must be no wider than the conveyor width and 8-12 inches long. Mounting must be such as to permit easy lowering and removal for cleaning.

11. Drive pans shall be provided and installed on all conveyor drive sections. Drive pans must be solid sheet metal. They shall be no wider than the conveyor and associated platform width, and no longer than the drive section.

12. All gearbox assemblies shall be equipped with drip pans. The drip pans shall be fitted with drain plugs to assist with clean up. Drip pans shall be solid sheet metal, not less than 12 gauge, unless otherwise approved by the City of El Paso or its representative, with minimum ¾" high sides on all four edges. The drip pan shall be a bolt-mounted unit of the gearbox assembly.

13. Provide safety guards and signage adjacent to the pinch points associated to High Speed Paddle Diverters.

14. Breakaway End Cap Safety Guard:

    a. Provide a safe and reliable breakaway end cap safety guard on all run out conveyors that will immediately stop the conveyor and prevent injury to personnel and damage to baggage in the event that a person or part thereof or a bag gets lodged between the conveyor belt and the end cap.

    b. The design of the end cap safety guard shall not cause undue nuisance alarms during ordinary operation. Activation of the end cap interlock must annunciate an alarm on the MDS display.

    c. When resetting the end cap interlock device, the operator must go through the normal subsystem startup procedure following all safety starting procedures.

    d. Construct the end cap for public areas of stainless steel to match ticket counter stainless steel finish; in all non-public areas, paint the end cap safety yellow to comply with all safety requirements.

15. Refer to "Head and Tail Pulleys" section of this specification for details on end pulley finger safety guards.

J. Side Guards

1. Provide side guards the full length of both sides of all conveyors except at points that baggage is loaded or removed.

2. Provide hinged or removable sections only where overhead clearance restricts access for clearing jams. Design hinged or removable side guards to permit rapid removal (removable without tools). The design must preserve rigidity and alignment equivalent to fixed side guards. The City of El Paso or its representative must approve all locations where hinged or removable sections are to be used.

3. Side guards shall be minimum 12-gauge hot rolled steel, integral to the slider bed. Side guards shall incorporate a formed 90° edge turned away from the conveyor and a formed 90° edge turned down to eliminate sharp edges. There shall be no gap between the side guard and bed section that can cause jams or baggage tags to be snagged/ripped off.

4. Use type 304 stainless steel with #4 brushed satin finish uniform throughout passenger areas (such as but not limited to check-in, or curbside) and through penetrations into non-public areas. Stainless steel in public areas shall incorporate smooth flush edge seams. Radius type edges are not acceptable.

5. All stainless steel back guards in public areas such as ticket counter, curbside, and over size load belts shall incorporate stiffening supports that are attached to the conveyor frame by means of a welded or bolted connection. The stiffening supports shall be attached to the stainless back guarding by means of a key-hole slot in the support and a welded stud on the back guarding.

6. Use cold rolled or hot rolled low carbon steel galvanized or hot dip, primed and painted on both surfaces in areas exposed to the weather.

7. Use cold rolled or hot rolled low carbon steel primed and painted on both surfaces in all interior areas.

8. Provide side guards with vertical stiffeners a maximum of 40" on center for transport conveyors and 30" on center for load conveyors. Make the stiffeners from steel angle at least 1-1/4" by 1-1/4" by 3/16".

9. Provide 30° transition panels between side and back guards of different heights.

10. Conveyor Side Guard Heights:

    a. Unless otherwise specified on drawings, construct conveyor side guards for this project to the following heights:

Conveyor Type	Side Guard Height
Check-in Take-away Back Guards	21"
Transport Conveyors	12"
Incline/Decline conveyor Side Guards	12"
Decline-fed Power Turns (flat or spiral)	21"
Power Turns (flat)	12"
Power Turns (spiral)	12"
Transfer Load Conveyor Back Guards	21"
Take Away Conveyor Side Guard directly opposite a diverter or 45 degree merge	21"
45 Degree Merge Side Guards	12"
EDS Device In-Feed and Exit Conveyor (operator side)	4"

11. Provide holes 1.5" in diameter located either 2.5" or 3” from the top of the belt to the center of the hole through side guides for photocell beams as required. Punch the holes with a dimple away from baggage flow to minimize the possibility of snagging a bag and causing a jam. Deburr all photocell holes so that they are free of sharp edges and burrs.

12. Provide removable side guards at locations where diverters or 45° merges shall be installed at a later date.

13. Mounting of any mechanical or electrical equipment on the outside radius side guard of power turns is not accepted since it restricts maintenance access to the outer perimeter chain or guide bearings of the turn belt.

14. Provide marking of CBIS conveyor sideguards as specified in Part 3 of these specifications.

15. Side guards for failsafe removal points shall be identified by red paint to mark removal access.

K. Break-Overs

1. Provide break-overs wherever conveyors follow a convex curve.

2. Vertical or horizontal to vertical bends shall be constructed in the same manner as slider bed conveyor sections. The bed shall have a 10'-0" radius break-over slider bed to effect a smooth change in belt direction.

3. For return belt idling, vertical horizontal to vertical bends shall be equipped with a snubber pulley to ensure that the return belt does not extend below the conveyor frame.

L. Bearings

1. All bearings shall be pre-lubricated, self-aligning, anti-friction and sealed for the specified life of the bearing. Lubrication fittings shall be removed (removal to be approved by the City of El Paso or its representative) at the time of installation or at the factory and replaced with appropriate plugs.
2. All bearings shall have a minimum L-10 life of 70,000 hours based on service factor and loading of conveyors, and on the manufacturer's published data showing load rating of each bearing used.
3. All bearings shall be surface-mounted flange bearings attached to the outside of the conveyor bed.
4. Bearings are to be equipped with an eccentric or squeeze locking type collar arrangement to secure the bearing to the related shaft.
5. All bearings and exposed shaft ends at load conveyors, unload conveyors, ETD work areas and EDS work areas shall be covered with bearing covers.

M. Hardware

1. Provide zinc plated or otherwise treated fasteners. Use washers, lock washers and nuts.
2. All fasteners in public areas are to be made of stainless steel and are described elsewhere in these specifications.

N. Straight Belt Conveyor

1. Construct transport, queue, load, unload, incline and decline conveyors of components as specified previously.
2. Design each baggage handling belt conveyor with a length to width ratio less than 2.5 with special tracking provisions to ensure positive belt tracking.
3. The maximum length of a straight belt conveyor shall be 60' unless otherwise shown in the contract drawings.
4. In the case where the conveyor line configuration, related controls and baggage input/processing are directly associated with the EDS or is in a tracking zone, the conveyor shall be equipped with a VFD.

O. Ticket Counter Take-Away Conveyors

1. The end pulleys of the ticket counter take-away conveyors shall be such that there are no exposed gaps between the pulley and slider bed, nor shall it constrict the continuous gap between the belt edge and the guard (refer to “Head and Tail Pulleys” section of this specification for details on end pulley finger safety guards).
2. Bearings shall be installed on adjustable brackets.
3. Take-up and snub rollers shall be easily accessible and adjustable for belt tracking.
4. Bearings shall be pre-lubricated (grease-packed) and sealed for life.
5. The drive unit shall be of the center drive type.
6. All equipment with exposed surfaces visible to the public shall be covered with type 304 stainless steel with a #4 brushed satin finish uniform throughout, unless otherwise specified by the Architect or the City of El Paso. Stainless steel in public areas shall incorporate smooth flush edge seams. Radius type edges are not acceptable.

P. CBRA Load and Unload Conveyors

1. The end pulleys of the Oversize CBRA runout and clear bag conveyor segment, along with the suspect bag queue conveyors, the clear bag and CBIS Re-input conveyors in the CBRAs shall be such that there are no

exposed gaps between the pulley and slider bed, nor shall it constrict the continuous gap between the belt edge and the guard (refer to "Head and Tail Pulleys" section of this specification for details on end pulley finger safety guards).

2. Bearings shall be installed on adjustable brackets.
3. Take-up and snub rollers shall be easily accessible and adjustable for belt tracking.
4. Bearings shall be pre-lubricated (grease-packed) and sealed for life.
5. The drive unit shall be of the center drive type.
6. All Load and Unload conveyor segments within the CBRAs shall be covered with a painted steel shrouding, uniform throughout on both sides of the conveyor segment. Additionally, on the work aisle sides of the conveyor segments, provide an 8" high x 4" wide toe-kick throughout the length of the conveyor segment(s), as illustrated in the contract documents. Construct shrouding toe-kicks with 1/4" x 4" minimum steel flat stock and install so as to leave no gaps and with a ground smooth painted finish similar to the shrouding.
7. Provide a fire retardant sound damping material to the inside face of all conveyor shrouds to reduce sound levels and configure the conveyor segment drive components (e.g. - gear box, motor and the like) for all load and unload conveyors within CBRA to accommodate a 4" wide (max.) shrouding on the operator's side of the conveyor segment.

Q. Power Turns

1. All power turns shall be provided with a four (4) foot inside radius for standard conveyors and five (5) foot inside radius for oversize conveyors, unless noted on the contract drawings. All power turn support structures are to be of metal construction. Power turn shafts shall be 1-7/16" diameter 1018 TGP (turned, ground and polished) steel.
2. The conveyor system layout shall be designed to permit maximum radius power turns of 180° for flat power turns.
3. Ensure that the outside circumference side guard shall remain readily removable for maintenance. Ensure that no conduit is fastened to it.
4. To minimize the gap between a power turn and straight conveyor, ensure the end rollers (both power turn and straight conveyor) are extended to gain a maximum gap of 1" between the faces of the belts.
5. Design the power turn conveyor so that trained maintenance personnel can easily replace belts.
6. Belt speed shall be measured on belt centerline.
7. Drive assemblies, bearings, and pulleys shall be designed as per straight conveyors detailed within this section of the specification.
8. If a power turn is installed prior to a 45-degree merge conveyor, the turn shall be equipped with a VFD so that baggage queuing can be achieved on the turn.
9. In the case where the conveyor line configuration, related controls and baggage input/processing are directly associated with the EDS or is in a tracking zone, the turn shall be equipped with a VFD.

R. Spiral Turns

1. All spiral turns shall be provided with a four (4) foot inside radius for standard conveyors and five (5) foot inside radius for oversize conveyors, unless noted on the contract drawings. All spiral turn support structures are to be of metal construction. Spiral turn shafts shall be 1-7/16" diameter 1018 TGP (turned, ground and polished) steel.
2. The conveyor system layout shall be designed to permit maximum radius spiral turns of 225° where the rate of incline or decline is less than or equal to 24" in 90°.
3. Match side guard height with adjacent conveyors where rate of rise or fall is less than 12" per 90°. Provide 21" high side guards for other spiral turns with a greater degree of rise or fall.

4. Ensure that the outside circumference side guard shall remain readily removable for maintenance. Ensure that no conduit is fastened to it.
5. To minimize the gap between the spiral power turn and an adjoining straight conveyor, ensure the end rollers (both spiral power turn and straight conveyor) are extended to gain a maximum gap of 1" between the faces of the belts.
6. Limit rise or fall to a maximum rate of 24" in 90°.
7. Belt speed shall be measured on belt centerline.
8. If an "S" spiral power turn configuration is incorporated in the project design, provide a "gap brush" between the power turns to fill the gap.
9. Design the spiral power turn conveyor so that trained maintenance personnel can easily replace belts.
10. Drive assemblies, bearings, and pulleys shall be designed as per straight conveyors detailed within this section of the specification.
11. In the case where the conveyor line configuration, related controls and baggage input/processing are directly associated with the EDS or is in a tracking zone, the turn shall be equipped with a VFD.

S. Queue Conveyors

1. Provide queue conveyors of the manufacturers approved design capable of sustaining continuous stop/start operation at thirty – (30) cycles per minute under loaded conditions, without compromising a 60 bag per minute minimum processing rate for the associated subsystem in which the queue conveyor is installed.
2. Design the queue conveyors so that trained maintenance personnel can easily accomplish belt tracking.
3. Design of the queue conveyor shall be so that adjustments to belt tracking should only be required at a maximum of once every thirty- (30) days.
4. Design, manufacture and installation of queue conveyors shall be in accordance with the design specifications of transport conveyors.
5. In the case where the conveyor line configuration, related controls and baggage input/processing are directly associated with the EDS or is in a tracking zone, the conveyor shall be equipped with a VFD.
6. As the CBRA is a manned area and bags will be handled/removed from their respective queue conveyors by their operators, the end pulleys of all Suspect Bag (SB) subsystems queue conveyors shall be such that there are no exposed gaps between the pulley and slider bed nor shall it constrict the continuous gap between the belt edge and the guard (refer to "Head and Tail Pulleys" section of this specification for details on end pulley finger safety guards).

T. 45° Merge Conveyors

1. Provide and construct merge conveyors with typical slider bed construction. Set drive/take-up unit at 90° to the flow of baggage. Run the belting over fixed 3-1/2" minimum diameter Schedule 40 pipe (or manufacturer's equivalent) and set at 45° to the conveyor centerline.
2. If the drive motor is equipped with a clutch/brake unit it shall be capable of a continuous operating capacity of 30 cycles per minute. The use of a VFD in lieu of a clutch/brake to control the merge operation is acceptable
3. Design the merge conveyors so that trained maintenance personnel can easily accomplish belt tracking.
4. Design the merge conveyors so that trained maintenance personnel can easily replace belts.
5. Install merge conveyors with top of belt (TOB) 2" higher than that of the receiving conveyor to ensure smooth baggage transfer.
6. Merge shall be equipped with spring loaded, self-adjusting tensioners to prevent slippage and excessive noise.

7. Merge to downstream or "take-away" conveyor speed relationship must ensure that merged items are not skewed on the take-away conveyor.

8. Merge equipment design and speed must ensure the successful transfer of airline garment bag boxes or items of similar size onto the downstream or "take-away" conveyor so that there are no jam problems associated with the garment bag boxes at either that conveyor or any conveyors downstream of the merge. Install a minimum ½" wide brush (with holder arrangement) inserted between the merge and the take-away conveyor biased towards the downstream corner of the merge to eliminate potential snag points.

9. Merge conveyors, shall be fabricated by a qualified manufacturer, with previous installations in BHS applications. Final approval of the qualified manufacturer shall be at the discretion of the City of El Paso or its representative.

U. Vertical Sorter Conveyors

1. The purpose of the vertical sorter conveyors is to provide vertical sortation of baggage from one transport conveyor line to two transport conveyor lines situated in a vertical attitude. The baggage may be transferred either in the upward or downward direction.

2. Vertical sorter conveyors are to be constructed with the following capabilities:

   a. Load capacity

      1.) Static: 450 lb

      2.) Dynamic: 120 lb

   b. Speed

      1.) As required for specified processing rates

3. Guarding shall be provided to ensure adequate personnel safety. Guards shall be interlocked so as to disable the vertical sorter conveyor function when the guards are open/removed. Provide a maintenance bypass switch, which has the capability to bypass the interlock. Provide drawings of the proposed guarding to the City of El Paso or its representative for approval.

4. Each vertical sorter conveyor shall be capable of sorting at a minimum sustained rate of 35 bags per minute when cycling between vertical positions for every bag. This rate shall increase to a minimum of 40 bags per minute when the device is not cycling between vertical levels.

5. The use of 1 horsepower motors is permitted for each of the vertical sorter belt conveyors. Minimum 2 horsepower shall be utilized for the crank mechanism.

6. The design, manufacture, and installation of the vertical sorter conveyor must conform to all sections of this specification as is appropriate. Note that the design, manufacture and installation of the vertical sorter conveyor must be such to ensure that the device is heavy-duty and shall withstand the abusive environment of a high volume baggage operation.

7. In the event of a vertical sorter conveyor position switching device breakdown, it shall be possible to manually position the device into one configuration. Provide outputs from a manual/auto switch to the BHS PLC for use when the vertical sorter is to be positioned manually.

8. Each of the conveyors comprising the vertical sorter conveyor shall be independently powered.

9. It shall be acceptable to use motorized pulleys in this application, provided such design complies with the specifications identified elsewhere in this document.

10. Final approval of the qualified vertical sorter manufacturer shall be at the discretion of the City of El Paso or its representative.

2.06 FLAT PLATE MAKE UP DEVICES

A. General

1. Flat plate devices shall be constructed of articulating, heavy duty, and metal crescent-shaped plates forming a continuous rotating flat surface.

B. Dimensions

1. The usable plate width for flat plate devices shall be between 32" and 35" (plate width will be dependent on the flat plate manufacture selected).

a. The height of flat plate devices shall be as follows unless otherwise specified or shown on the Contract Drawings:

1.) Make-up devices: 29 to 33"

C. Load Rating

1. All flat plate devices shall be capable of supporting a minimum dynamic load of 85 lb. per linear foot and a single concentrated static load of 200 pounds.

D. Operating Speeds

1. Device operating speeds for flat plate devices shall be 90 fpm.

2. Flat plate devices shall be capable of accepting a baggage input of thirty – (30) bags per minute.

E. Drives

1. The drive shall consist of a heavy-duty roller chain driven by a motor through a gear reducer. The motors and speed reducer assembly shall be connected using double grooved sheaves and matched V-belts. Drives shall be designed such that the speed reducer drives an endless chain equipped with a minimum of twelve heat treated dogs which shall engage drive pins in the main chain. The chain must engage at least two carrier assemblies at all times. The drive chain must be self-aligning and supported throughout its length.

2. Drives shall be provided with an appropriately sized soft-start controller.

3. The design of the drive circuitry shall be such that the drive motor safety disconnect switch will also open the control circuitry of the device whenever the disconnect switch is turned off. Whenever the disconnect switch is turned back on, it shall be required to reactivate the appropriate device start controls, thus allowing the drive motor start-up to be controlled by the soft start controller.

4. A minimum of two drive units, are required for all baggage make-up applications due to redundancy requirements. The device shall be designed and configured such that if one of the drive units should fail, the device shall continue to operate at 100% capacity including the ability to start-up under full load conditions with the remaining drive unit. Easy access and means for disconnecting failed drive unit shall be provided to allow for system maintenance with a minimum of time and effort. Drive design and motor applications must provide for the potential of variations in “actual” motor speeds so that the drive motors are equally loaded. The motor used in the dual drive units is to be of the “high slip” design type.

5. High-Slip Motors are required by specification where the use of dual drive units is used. These motors shall be copper-wound NEMA Design "D", Class "H" Insulation at 1.0 Service Factor with Class "F" temperature limits. Inverter Duty or Inverter Ready Motors shall be used at "VFD" controlled applications. These motors shall be copper-wound NEMA MG1, Part 31 Rated Design "B", Class "H" Insulation at 1.0 Standard Service Factor with Class "H" temperature limits. All motors shall be of the "high efficiency - low energy" type.

6. For ease of drive synchronization, variable frequency controllers are acceptable.

7. The device drive and idler shaft sprockets must be restrained through the use of double setscrews to prevent any lateral movement of the sprockets on the respective shafts. Setscrews alone are not sufficient.

8. Drives shall be designed for operation from a 480 VAC, 3-phase, 60 Hz power source. The drive shall be sized to permit start-up under full load conditions.

9. One 120 VAC, single-phase, 60 Hz duplex outlet shall be provided as a maintenance outlet in the general vicinity of each drive assembly.

10. The BHS control circuitry must be designed to ensure that the flat plate device is running at full speed prior to the start-up of any feed conveyors.

11. Install in close proximity to one of the drive units a control station with a Maint/Auto switch and a jog pushbutton for use by maintenance personnel only. When the switch is in the maintenance position, the device can move (jog) in the forward direction only when the jog pushbutton is held in.

F. Flight Assemblies

1. All pallets consisting of 5/16" thick steel plates shall be provided. These steel plates must have a black urethane coating.

2. Gaps between adjacent pallets of the device shall not exceed 1/8".

3. Elevation differences between adjacent pallets shall not exceed 1/16".

4. All exposed mounting screws shall be counter sunk.

G. Frame and Pallet Support System

1. A support system and guide for the chain and pallets constructed of standard modular assemblies bolted together shall be provided. The track space must be fabricated from rolled or formed structural steel and shall form an integral part of the support structure. The structural supports for the tracks shall be spaced at a maximum of 5' on center. Pallets must be supported by a minimum of two rows of polyurethane tired ball bearing wheels. Leveling screws located at the base of each frame module shall allow for easy adjustment of the assembly. Leveling screws should provide a minimum elevation adjustment of 1".

2. Once the structure of the device has been installed and properly aligned, all track joints and cam follower guide rail joints shall be welded and ground smooth to assure that the related track and guide surfaces are smooth and without vertical and horizontal differences.

3. The design of the sort flat plate device shall incorporate a means of expansion of the device to offset any wear in the main link bushings/connecting link pins. At a minimum, this shall include the following provisions:

a. Overlapping design of the cam follower guide track so that the cam follower surface is always in contact with some portion of the guide track at the expansion joint.

b. Heavy duty jacking bolt arrangement to assist in expanding the device when needed.

H. Finish and Trim

1. Baggage Make-Up Applications

a. All steel trim elements of flat pallet devices that are located in the make-up area shall be painted. As an alternative, a powder coat finish may be applied electrostatically to said surfaces. All painted steel trim elements must be properly aligned both vertically and horizontally. Butt joints of adjacent painted steel trim elements must provide a smooth surface. Sharp edges on any of the painted steel trim elements as well as voids between adjacent element joints are not acceptable. In addition, all radii of trim elements must match.

b. Finger Guards

1.) A finger guard consisting of 6 inch, minimum 12-gauge formed channel or angle side rails shall be installed. The 6 inch total width of the finger guard shall overlap the plates by 3 inches and shall overlap the outer radius of the turn when the plate is bent at a 90 degree turn. The gap between the pallets and the finger guard shall not exceed 3/32". The vertical and horizontal alignment of the adjacent butt joints of the finger guards must not be misaligned nor is there to be any gap between the adjacent guards.

2.) Special attention is to be given to the design, manufacture and installation of the inner and outer perimeter finger guards as well as the vertical front face skirting at the expansion point of the flat pallet device.

3.) The design, manufacture and installation of the perimeter finger guards at the device expansion points must assure that they do not create a snag point. To further reduce the potential of snagging baggage at these expansion joint locations, the finger guards are to be designed and installed in an overlapping manner. The overlapping finger guards are to be welded and ground smooth on the upstream end of each expansion joint location.

c. Side Guards

1.) Inner perimeter side guards shall be provided for the entire inner perimeter of flat plate devices used for baggage make-up applications to prevent baggage from falling into the center of the device.

2.) Vertical side guards used as inner perimeter side guards shall be constructed of minimum 12-gauge steel. The inner perimeter side guards are to be 21" high with vertical stiffening bracing constructed of a minimum angle size of 1-1/4" x 1-1/4" x 3/16". The vertical stiffening bracing is to be located on a maximum center spacing of 2' - 6".

3.) Design and installation of the inner perimeter side guards must not restrict maintenance access to the flat pallet device or any other conveyor equipment.

4.) Any openings that are required in the inner perimeter side guards for photocells or their related reflectors are to be a maximum diameter of 1-1/2". These openings are to be punched with a dimple away from the flow of baggage to minimize the possibility of snags.

5.) Where the tip chute feeds onto the flat plate device, provide sufficient outer perimeter side guarding (nominally 6" high by 4' long, flared at the charge end (to prevent bag jams)) so that baggage does not fall off the device when they exit the discharge end of the tip chute.

d. Other Control Functions

1.) Ensure control logic is programmed so that any bag feeding onto the tip chute shall not discharge on top of a bag already on the flat plate unit.

2.07 EXPLOSIVE DETECTION SYSTEM - L3 Communications eXaminer 3DX 6700

A. TSA Equipment Responsibility

1. The EDS equipment will be supplied and installed by the TSA. Additionally, the EDS internal system wiring, networking and controls shall be provided by the TSA's Contractor.

B. BHS Contractor Responsibility

1. Provide all power, data and communication lines, and to coordinate the details of all required communication and signal interfaces (e.g., EDS machine status and control, bag loading and unloading, and bag status), between the EDS machines and the BHS with the TSA's EDS equipment supplier and the City of El Paso in order to successfully accomplish the intended operation described herein. Details of the available signals and data, along with the required cabling between the two systems, are typically covered in the EDS supplier's Integration Guide for the respective EDS machine(s); take on the responsibility to request for a copy through the City of El Paso. Provide all necessary control cabling, along with the communication and signal interfaces, between the EDS equipment and the BHS consistent with the EDS supplier's requirements. In all cases, provide any conduits and wiring between the BHS (e.g., BHS Control Rooms and associated Satellite workstations) and the EDS systems (e.g., EDS machines, TSA OSR server room and CBRA workstations) that are required for these interfaces (hard-wired I/O, data interface cabling and software driven), to include the termination of the required I/O and data interface cabling as coordinated with and supervised by the EDS Supplier.

2. Coordinate the placement of the EDS equipment, in its final location, with the EDS supplier and ensure proper alignment/positioning with the respective conveyor line.

3. Assume responsibility for the EDS integration with the BHS.

4. Assume responsibility for the site acceptance testing of the integrated system, which shall be performed

between the TSA's EDS provider and the BHS Contractor.

5. The conveyor segments including their associated components and related support system upstream as well as downstream of the EDS machines shall be designed and installed so as to allow the easy removal of these conveyor segments, to gain access to their respective subsystem EDS machine for the removal of the unit/sections, through the EDS egress paths, for initial installation, major repairs and replacements. Provide quick disconnect cables/fittings for these conveyor segments and their associated components, along with caster wheels and floor locking pins on the respective conveyor's floor support legs, to assist in the removal/maneuvering of the In-Line CBIS conveyor segments.

C. General

1. The following information is for reference only. Contact the EDS device provider to request the necessary documents that would be required for coordination, interface, and installation purposes; documents such as but not limited to: Technical Specifications, Installation Guidelines/Manual, BHS Integration Guide, BHS Interface Manual, and EDS testing guidelines).

2. Bag Presentation

a. Bag presentation immediately upstream of the L3 eXaminer is critical to successful bag scanning. Provide a means of centering/positioning bags prior to entrance into the EDS device.

b. The use of the stationary plows are allowable or propose an alternative method of achieving required bag positioning. The method by which the positioning of the bag will be accomplished will be clearly illustrated/identified in the design. Submit for review any "non-standard" equipment designs as outlined in Part I of this project specification.

3. Insert/Remove Station

a. The orientation and alignment of test bag for daily calibration is critical. The L3 eXaminer PLC provides a special "Insert Mode" to allow this function. To utilize this function, provide an externally mounted key switch and re-start button must be mounted and wired back to the L3 eXaminer PLC.

4. BHS Interface Specifications

a. The L3 eXaminer interfaces to the BHS PLC with an interface that complies with the TSA's Office of Security Technology CBIS Interface Requirements Document (TSA OST-CBIS-IRD). All signals and data, with the exception of emergency stop circuits, are passed over this interface link. These functions include baggage handling through this segment, bag loading in and out of the segment, error and jam detection and recovery, decision transfer, light curtains, status reporting to the BHS, and baggage insertion and removal at in feed and exit control stations.

b. Provide all control cabling between the BHS and the L3 eXaminer.

2.08 MISCELLANEOUS MECHANICAL EQUIPMENT

A. Catwalks

1. Provide as a minimum, the maintenance catwalks as located on the Contract Drawings or as required to ensure safe access for all personnel who operate, maintain or have access to the BHS. Coordinate with the Architect, the City of El Paso or its representative to confirm the final number and locations for all maintenance catwalks and crossovers.

2. Design, provide and install all maintenance catwalks and access ladders required to allow easy access to all EDS devices by TSA agents who are responsible to both test the EDS devices and clear bag jams within the devices during the normal operational period. Submit to the City of El Paso the design of the catwalk and access ladders for review and approval.

3. Include personnel protection at all catwalks to ensure that any potential injury is minimized. This includes swing gates or off-sets at access locations per OSHA standards 1910.23, padding, rounded corners, smooth welds, deburred surfaces and any other measures as may be necessary.

4. Attach all catwalks to the support structure, whether using decking of either sheet steel using stitch welds every 24" or use open steel grating (Ry-Weld 19W4 or approved equal), or as dictated by OSHA standards. Coordinate the type of catwalk deck (solid) with the City of El Paso or its representative and the Project Architect to ensure fire code/protection measures and lighting considerations are complied with.
5. Design catwalks to provide adequate space for operating and maintenance personnel.
6. Design structure to limit the deflection to 1/360 of the unsupported span length, under a concentrated 300-pound load.
7. Design all catwalks capable of supporting a minimum uniformly distributed live load of 40 pounds per square foot and a dead load of 25 pounds per square foot (total load of 65 pounds per square foot). The use of pan type catwalks constructed of #12 gauge hot rolled steel is acceptable.
8. Notch the decking where needed to clear obstructions. Add angle clips as required to maintain adequate support of notched structure.
9. Where lengths of decking are butted end to end, ensure that the joint falls on a structural cross member.
10. Securely weld all pieces of decking to the catwalk frame and all structural cross members.
11. Any catwalks with inclines of up to 8° will be equipped with an anti-skid walking surface. Catwalks with inclines of more than 8° will be equipped with steps as well as the anti-skid material.
12. Provide steps at all locations where there is an elevation change in excess of 8". Paint the step “yellow”.
13. Minimum catwalk width shall be nominally 36" with a 3" gap between the conveyor and the catwalk.
14. Unless otherwise noted on the drawings, the top of catwalk shall be installed 8” below the top of belt at the intermediate section of the conveyor (between drive sections) and 15” below the top of belt at the drive sections.
15. Design and installation of access into the conveyor catwalk areas shall not be less than a 36” wide by 44”high, clear access envelope, to allow fire fighters with breathing apparatus enough room to climb up to and access the catwalk area.

B. Toeboards

1. Provide toeboards on both sides of all catwalks and ramps 24" or more above the finished floor except where adjacent equipment or building structure provides the required function. Construct toeboards of 1/4" x 4" minimum steel flat stock and install so as to leave no gap between the catwalk walking surface and the lower edge of the toeboard. It is acceptable to use # 12 gauge rolled steel 4” high toeboard. Securely weld toeboards to vertical handrail posts and to the access way support structure.
2. Design toeboards in accordance with OSHA standards.

C. Stairs

1. Provide as a minimum the stairs as located on the Contract Drawings or as required to ensure safe access for all personnel who operate, maintain or have access to the BHS. Coordinate with the Architect, the City of El Paso or its representative to confirm the final number and locations for all stairs/ladders.
2. Design stairs to the following specifications or per local code if more stringent:
   a. Treads:
      1.) Minimum of 10" deep
      2.) Non-skid upper surface
      3.) Extend front edge of tread over rear edge of lower tread a maximum of 1-1/4".
   b. Risers:
      1.) 8" (maximum)

2.) Equal in height in any one flight within 1/8"

c. Angle between stringer and horizontal - 38° (maximum)

d. Provide catwalks as required so that intermediate flights do not exceed 15 steps.

e. Provide protective measures (i.e. swing gate or offset) at the top of stairs.

3. Design stairs in accordance with OSHA standards, section 1910.24 and 1910.23.

4. Provide stairs with handrails from top to bottom in accordance with OSHA sections 1926.500 and 1926.501.

5. Handrails shall be painted “yellow”.

D. Handrails

1. Provide handrails around all catwalks more than 24" above the adjacent floor and on all stairways. Design handrails to withstand a minimum load of 200 lbs. applied in any direction at any point on the top rail. Vertical support posts shall be spaced not more than 8' on centers. Make handrails continuous.

2. Design all handrails to consist of a top rail with one intermediate rail positioned halfway between the top of the walking surface and the top of the top rail as per OSHA code of Federal Regulation Part 1926.500

3. In areas of restricted clearance (vertically or horizontally), make intermediate rails spanning across conveyor drive locations removable for drive maintenance access.

4. Close all open handrail ends, vertical or horizontal, by welding a metal cap.

5. Grind smooth all handrail welds.

6. Handrails shall be painted “yellow”.

E. Maintenance Ladder

1. Vertical Fixed Maintenance Ladders

a. Provide fixed, 90-degree ladders to reach catwalks as shown on the Contract Drawings. Provide additional maintenance ladders as required to ensure safe access for all personnel who operate, maintain or have access to the BHS. Coordinate with the Architect, the City of El Paso or its representative to confirm the final number and locations for all maintenance access ladders.

b. Design ladders to meet or exceed OSHA standards, section 1910.27 and 1910.23.

c. All fixed ladders shall be of steel construction as specified elsewhere in this document.

d. The distance between rungs shall be no more than 12 in. and shall be uniform throughout the height of the ladder. All rungs shall have a minimum diameter of 3/4 in. and shall withstand a 400-pound load when in use. All rungs shall be a minimum of 24 in. wide. The live loads imposed by personnel occupying the ladder shall be considered to be concentrated at such points as shall cause the maximum stress in the structural member being considered.

e. Grind smooth all rough surfaces and edges.

f. Side rails shall be of such cross section as to afford adequate gripping surface without sharp edges or burrs.

g. Allow a minimum of 7 in. between the back of the ladder and the nearest permanent object. Allow a minimum of 30 in. between the front of the ladder and the nearest permanent object. Allow 16 in. from the center of the ladder to the nearest object on each side. The step-across distance from the nearest ladder edge to the nearest equipment or structure edge shall be a minimum of 2-1/2 in. and shall not exceed 12 in.

h. Provide both safety ladder hand bars per OSHA requirements and swing gate (s) at the top of all ladders.

i. Provide fixed vertical ladders with handrails from top to bottom in accordance with OSHA section

1926.500 and 1926.501.

j. Paint all fixed vertical ladders in "yellow".

2. Ship's Ladders

a. Provide fixed maintenance ship's ladders to access catwalks as shown on the Contract Drawings. Provide additional maintenance ladders as required to ensure safe access for all personnel who operate, maintain or have access to the BHS. Coordinate with the Architect, the City of El Paso or its representative to confirm the final number and locations for all ladders.

b. Design ladders to meet or exceed OSHA standards, section 1910.27 and 1910.23.

c. Provide serrated modified steel treads a minimum of 6 in. by 3.0 pounds per linear foot channel 30 in. long covered with non-skid safety tread finish. The live loads imposed by personnel occupying the ladder shall be considered to be concentrated at such points as shall cause the maximum stress in the structural member being considered.

d. Provide steel stringers using minimum 7 in. by 4.72 pounds per foot channel.

e. Design ladder so that the angle between the stringer and the floor is not less than 60 degrees and not more than 65 degrees.

f. Make the distance between treads a maximum of 12 in. The distance between treads shall be uniform throughout the height of the ladder.

g. Provide handrails on both sides using 1-1/4 in. by 1-1/4 in. by 1/8 in. aluminum tubing.

h. Provide protective measures (i.e. swing gate or off-set) at the top of stairs.

i. Grind smooth all rough surfaces and edges.

j. All ship's ladders shall be of steel construction as specified elsewhere in this document.

k. Provide ship's ladders with handrails from top to bottom in accordance with OSHA section 1926.500 and 1926.501.

l. Paint all ship's ladders in "yellow".

3. Swing Down Aluminum Ladders

a. Provide Swing Down Aluminum Ladders to access catwalks as shown on the Contract Drawings. The landing or top of the ladder should be adjacent to the associated catwalk not a part of it. Provide additional maintenance ladders as required to ensure safe access for all personnel who operate, maintain or have access to the BHS. Coordinate with the Architect, the City of El Paso or its representative to confirm the final number and locations for all ladders.

b. Swing down ladders are to be of Type 1A, 300 pound capacity extra heavy-duty aluminum construction.

c. Provide 1-5/8 in. serrated aluminum "D" rungs hydraulically double crimped in place. The live loads imposed by personnel occupying the ladder shall be considered to be concentrated at such points as will cause the maximum stress in the structural member being considered.

d. Provide 3-inch wide I-beam side rails.

e. Design ladder so that the angle between the side rails and the floor is not less than 60° and not more than 65°.

f. Make the distance between treads a maximum of 12 in. on center. The distance between treads shall be uniform throughout the height of the ladder.

g. The minimum inside clear width for a swing-down aluminum ladder shall be 30"

h. Provide lifting mechanism, counter balance, and pulleys to hold ladder in the up position when not in use. The ladder should be stable either in the up or down position due to the counter weight without

requiring any tie off or similar.

i. Provide protective measures (i.e. swing gate or off-set) at the top of the ladder.

j. Design ladders to meet or exceed OSHA standards, section 1910.26 and 1910.23.

k. Grind smooth all rough surfaces and edges.

l. Provide swing down aluminum ladders with handrails from top to bottom in accordance with OSHA section 1926.500 and 1926.501.

m. Provide swing down aluminum ladders with a small pull cord and counterbalance that is set up so that at no time is a force more than 2- lbs required to either lift up, pull down or stop the ladder in mid motion. If such balance can't be achieved, gas springs can be used as "assist" mechanisms to achieve the maximum required force requirement, but counterbalance will still be required.

n. Swing Down Ladder Advisory/Warning Beacon

1.) Furnish a failsafe interlock with associated swing down ladder. Provide the following equipment/controls:

a.) An Amber rotating beacon as a swing down ladder warning in the vicinity of each swing down ladder that will be visible to tug and cart drivers entering the immediate area of the respective ladder.

b.) Activation of the beacon shall occur as the swing down ladder is traveling from the full up position to the full down position and be maintained while in the down position.

c.) Deactivation of the beacon will occur when the swing down ladder is in the full up position.

4. Aluminum Rolling Platform Ladder

a. Provide as a minimum the rolling platform ladders as located on the Contract Drawings or as required to ensure safe access for all personnel who operate, maintain or have access to the BHS. Coordinate with the Architect, the City of El Paso or its representative to confirm the final number and locations for all ladders.

b. Aluminum rolling platform ladders shall conform to the following specifications or per local code if more stringent:

1.) Treads:

a.) Minimum of 7" deep

b.) Non-skid ribbed upper surface

2.) Risers:

a.) 10" (maximum)

b.) Equal in height in any one flight within 1/8"

c. Design stairs in accordance with OSHA standards.

d. Provide stairs with handrails from top to bottom in accordance with OSHA sections 1926.500 and 1926.501.

e. The ladder shall have a 350 pound rated capacity.

F. Fire Door (Powered)

1. Assume the responsibility for the procurement, power and control design, mechanical and electrical installation of rolling shutter, slat-type, between-jamb-mounted and interior-face-mounted fire doors, including, as a minimum, the following features:

a. U.L. labeled hour rating to match fire partition walls where door is installed. For example, at 2-hour

rated walls provide minimum UL labeled 2 hour rated doors. Obtain the proper fire rating from the City of El Paso or Architect for all fire doors within the scope of the BHS Contract.

b. Electric Operator with 480 VAC, 3 phase, 60-hertz motor controller provided by the door manufacturer.

c. Up and Down limit or proximity switches connected to PLC input.

d. Electrical or pneumatic bottom edge strip for automatic return to open position upon contact. If a pneumatic / electrical bottom edge strip is not available, a photocell or proximity switch shall be used in lieu of the bottom edge strip for detecting a bag under the door.

e. Fire/heat/smoke detectors located to sense approaching fire, heat or smoke source on the conveyor shall be provided by Fire Alarm System Contractor as per the specified requirements of their Fire Alarm System Specification.

f. One set of normally open dry contacts for each fire door shall be provided, mounted and wired, inside the MCP controlling the conveyor line that the fire door(s) is mounted on. Coordinate the spatial and access requirements within the MCP for these contacts with the Fire Alarm System Contractor. Connect each normally open dry contact to the appropriate PLC I/O module. The contact shall close upon detection of a fire, heat or smoke condition requiring the closure of the fire door.

g. A 160°F fusible link which, when broken, will cause the door to close automatically and report to the central facility security/fire system the status of the door (e.g., open or closed). All wiring between the BHS MCP and the facility central security/fire alarm system for this reporting function shall be provided by others as per the specified requirements of their Fire Alarm System Specification. Provide the appropriate interface within the MCP/PLC to accommodate this reporting controls function and coordinate the interface requirements with the Fire Alarm System and Security System Contractors.

h. A means for manual operation. If operation is accessible from one side only, select the side offering the most danger should the door close and block a potential exit.

i. The door is to be equipped with an externally mounted limit or proximity switch. The limit or proximity switch shall be mounted in such a manner so that the "fully open" position of the door is sensed. If the door is sensed by the limit or proximity switch not be in the fully open position, the associated conveyor shall be stopped if running or shall not be permitted to start if the conveyor was not already running. Note that this limit or proximity switch is in addition to those limit switches provided with the door operator if the door is powered.

j. Provide all steel trim elements around door opening. Coordinate the trim requirements with the City of El Paso and Architect.

k. Coordinate installation and framing of the fire door(s) with the City of El Paso, Architect and other contracts.

l. Clearly define by way of detail plans and elevations (on the submitted mechanical drawings) all of the required operational and maintenance clear zone requirements in order to avoid any obstructions with other trades involved in building construction.

m. Coordinate the testing of fire doors the City of El Paso or its representative, the fire system installation contractor and the appropriate authorities.

n. All fire doors that are directly associated with BHS shall be installed perpendicular to the conveyor centerline. Coordinate installation and framing of the fire door(s) with other contracts.

o. The design of the fire door control system is described in the BHS “Special Control Requirements” section of this specification (Part 3).

G. Security Door (Powered)

1. The mechanical and electrical installation, power and control of rolling shutter, slat-type, between-jamb-mounted and interior-face-mounted security doors, shall include as a minimum, the following features:

a. Electric Operator with 480 VAC, 3 phase, 60-hertz motor controller provided by the door manufacturer.

b. Electrical or pneumatic bottom edge strip for automatic return to open position upon contact. If a pneumatic / electrical bottom edge strip is not available, a photocell or proximity switch shall be used in lieu of the bottom edge strip for detecting a bag under the door.

c. The door is to be equipped with an externally mounted limit switch, photocell or proximity switch to sense door position connected to PLC input. The limit, photocell or proximity switch must be mounted in such a manner so that the "fully open" position of the door is sensed. If the door is sensed, by the limit switch, photocell or proximity switch not be in the fully open position, the associated conveyor shall be stopped if running or shall not be permitted to start if the conveyor was not already running. Note that this limit switch, photocell or proximity switch is in addition to those limit switches provided with the door operator if the door is powered.

d. Provide all stainless steel trim elements (around door opening) for those security doors located in public view. Coordinate the trim element requirements with the Architect, the City of El Paso or its representative.

e. All security doors that are directly associated with the BHS shall be installed perpendicular to the conveyor centerline. Coordinate installation of the security door(s) with other contracts.

f. The design of the security door control system is described in the BHS “System Control Requirements” section of this specification (Part 3).

H. Chutes and Slides

1. Construct chutes and slides of minimum 10 gauge electro-galvanized or stainless steel with welded joints, formed and reinforced as required to resist deforming from the effects of manual loading. Remove rough spots and scale by grinding or filing to prevent snagging of baggage or tags.

2. In the event that joints must occur in the slide surface the upper sheet shall be lapped over the lower sheet (in the direction of baggage movement).

3. Design to allow a dynamic load of 50 pounds per square foot over the entire slide surface. No local deformation shall occur with a concentrated load of 150 pounds per square inch at any point on the slide.

4. Provide and install full-length side guards on both sides of all slides. Such guards shall be a minimum of 12" high above the slide surface with a rolled or formed top edge, a minimum of 3/4" thick, to afford stiffness to the guard panel.

5. Fasten side guard to the slide with bolts or by welding. Protrusions will not be permitted on the inside surface of the guard. Employ vertical stiffening support brackets a maximum of 2' on center on the outside of the side guards.

6. The charge end of the chute or slide shall be mounted so that is 1" below the adjacent belt height of the associated mainline conveyor.

7. Chute side guards or slide surfaces shall not deform or unduly deflect as a result of baggage impact caused by high-speed diversion.

I. Counterweight Slide (Tip Chute)

1. Construct the slide to swing up when contacted by a bag being conveyed on the lower conveyor.

2. Provide an adjustable down stop so that the slide can be set to stop at a maximum of 1"above the conveyor belt or a flat plate tread.

3. Construct the slide of a sheet metal surface attached to a frame to provide a rigid, lightweight assembly.

4. Mount a pivot shaft in self-aligning bearings grease packed for life with spring loaded contact seals.

5. Curve the slide so that the bottom of the slide is parallel to the conveyor belt or flat plate tread preventing exiting bags from digging into the belt or tread.

6. Provide the counterweight with a screw adjustment in order to ensure satisfactory operation. The slide shall be counter-weighted to the down position.
7. Provide a minimum 2" drop between the tail pulley of the feed conveyor and the slide. Ensure baggage does not jam or snag at the transition.
8. Slide angle shall not exceed 30º.
9. Prior to start of final design of the counterweight slide, build a prototype of the proposed design and demonstrate satisfactory operation to the City of El Paso or its representative. Do not start final design without the City of El Paso or its representative's written approval. This requirement can be waived by providing verification of successful construction and implementation of the proposed design at three previous project locations.
10. Fully guard the tip chute and its counter-balance weights to protect operating personnel as required by OHSA -Section 1910 Subpart O. Apply primer and then one coat of "yellow" paint to all guarding that are not exposed to the weather (e.g. within the bag room). Guarding that is exposed to the weather shall be hot-dip galvanized.
11. Provide sufficient outer perimeter side guarding (nominally 6" high by 4' long, flared at the charge end) on flat plate make-up devices so that baggage does not fall off the device when they exit the discharge end of the tip chute.
12. Provide sufficient guarding around the tip chute so that regardless of position.
13. Provide an integral speed brake curtain with the counter-weight slide.
14. Provide sufficient dampening of tip chute to avoid excessive down force and any resulting noise levels.

J. Non Powered Portable Gravity Roller Bed Conveyor

1. Provide a non-powered portable gravity roller bed conveyor to allow for the smooth transport of baggage between the International Odd Size Outbound conveyor.
2. Construct the bed section using 4 inch steel channel. Cross bracing shall be 1-1/2" angle stiffeners welded to the underside of the bed at a maximum center distance of 2' - 3'.
3. Provide 1.9" diameter spring loaded return galvanized rollers equipped with hex shafts to be located on 2" centers. Each roller shall be equipped with sealed, permanently lubricated, maintenance-free bearings.
4. Design of the bed section is to be hinged at the mid-point. The folding section shall be capable of rotating 180 degrees so as to lie flat on the non-rotating section.
5. The first three rollers adjacent to a powered conveyor that feeds the free rollers shall be of a "breakaway" design with non-captured shafts that will easily dislodge from their normal position in the event an object is forced between the moving conveyor and the rollers.
6. Captured rollers shall have spring loaded hexagonal shafts to allow quick replacement.
7. Each roller shall be able to withstand load of 100 pounds without permanent deformation or damage to bearings or shaft.

K. Draft Curtains

1. Provide draft curtains at all wall and floor penetrations between conditioned and non-conditioned space.
2. Construct the draft curtains with two staggered layers of black 8" wide anti-static vinyl (PVC) strips. Each strip shall be 0.080" (minimum) thick at center and include a 0.120" (minimum) thick beaded outer edges, installed with a 50% overlap (i.e., staggered strip layers) to create a barrier between the two spaces for dust and temperature control.
3. Provide stainless steel fascia in public areas.

L. Conveyor Impact Protection

1. Provide impact protection as located and detailed on the drawings or elsewhere as required to adequately protect conveyors and make-up devices. Construct the impact protection and supports of structural steel, heavy walled sections in shapes as indicated. Securely fasten all impact protection components to each other and to the floor.
2. Field verify, all dimensions shown on the drawings to insure proper fit with the equipment system interface.
3. Apply primer and then one coat of "yellow" paint to all impact protection steel members that are not exposed to the weather (e.g. within the bag room).
4. Hot-dip galvanize all impact protection steel members that are exposed to the weather.
5. Design impact protection so that maintenance access to the protected equipment is not restricted.
6. Contractor to ensure that the impact protection is able to withstand the impact of a fully loaded vehicle (tug and cart) when backing into position at a speed of 2 miles per hour.

M. Bollard

1. Provide individual bollard-type impact protection where required. Construct bollards from steel pipe, concrete filled with crowned cap. The minimum diameter for the bollard is 8".
2. Bollards that are exposed to the weather shall be hot-dip galvanized.
3. Apply primer and then one coat of "yellow" paint to all bollards that are not exposed to the weather (e.g. within the bag room).

N. High Speed Paddle Diverter (HSPD)

1. The function of the high-speed diverter is to selectively transfer baggage across the main sort conveyors onto the designated sortation device using either a transverse or linear motion.
2. Each high-speed diverter shall be capable of sorting baggage at a sustained rate of 60 items per minute.
3. The high-speed diverter must be capable of sorting all types of normal baggage, including but not limited to golf bags, by imparting a smooth controlled impact on baggage, ensuring that damage does not occur to the items from impact, jamming, snagging or falling to the floor.
4. The design, manufacture, and installation of the high-speed diverter must conform to all sections of this specification as appropriate. Note that the design, manufacture and installation of the high-speed diverter must be such to ensure that the device is heavy duty and shall withstand the abusive environment of a high volume BHS operation.
5. The high-speed diverter must be designed and installed so that the high-speed diverter powered faced paddle(s) always returns to the exact same home position, with no variation in the home position. Additionally, the return of the HSPD paddle to the home position must not influence the bag travel on the adjacent downstream conveyor, where it may cause bags to mis-track; for example, in the case of high-speed diversion of bags from the main line onto a 45° merge input belt, the HSPD must not affect the bag travel after the bag has been diverted and the paddle(s) returns to home position.
6. Design the high-speed diverter so that trained maintenance personnel can easily replace the powered faced paddle belts.
7. Design the high-speed conveyor and the take away conveyor such that there is a 3" drop from the HSPD conveyor to the take away conveyor. The transition plate shall be provided with rollers to aid in the bag transition to the take away conveyor.
8. Ensure sufficient sway bracing in both directions and vibration isolation on all supports.
9. Provide each HSPD with one Safety Disconnect switch to control both the clutch/brake or VFD and motor. The 3 phase Motor Safety Disconnect Switch shall also be used to interrupt the feed and neutral circuit to any externally powered electric clutch/brake or VFD device. The following describes how this shall be accomplished:

a. Provide 120 Volt AC power to the line side auxiliary contact in the Motor Safety Disconnect Switch (located at the motor) from the MCP.

b. Wire from the load side of the auxiliary contact of the Motor Safety Disconnect Switch (located at the motor) to the terminal strip in the respective MCP.

c. At the respective MCP, run two (2) parallel wires from the MCP terminal strip to the following:

1.) One parallel wire from the terminal strip to the PLC input to indicate that the Motor Safety Disconnect Switch (located at the motor (is in the "ON" or "OFF" position.

2.) The other parallel wire shall be the input voltage either for the DC power supply that will supply DC power to the associated motor clutch/brake or for supplying power to the VFD.

10. The primary line (conveyor line that the HSPD is installed on) conveyor belting shall be "bare by bare" with low COF.

11. Provide adequate safety guards for each HSPD, between manned areas (e.g., maintenance catwalks) and the HSPDs paddles. The HSPD safety guards shall be easily removable and shall mount on the top of the HSPD and adjacent conveyor side guards to provide a physical barrier between the manned areas and the HSPD paddles. Fabricate the HSPD safety guards with expanded metal, at least 12 gauge thick, and incorporate a formed 90° edge turned away from the guard face and another 90° edge turned down to eliminate sharp edges (i.e., similar to a conveyor side guard configuration).

12. The design of the HSPD control system is described in the Special Requirements section of this specification (Part 3).

13. A qualified manufacturer shall fabricate high-speed diverter, with previous installations in BHS applications. Final approval of the qualified manufacturer shall be at the discretion of the City of El Paso or its representative.

2.09 SPECIAL MECHANICAL EQUIPMENT REQUIREMENTS

A. General

1. Certain portions of this project require the modification, interfacing with, removal and demolition of existing conveyor equipment as shown on the Contract Drawings. Accomplishment of this work shall have to be carefully coordinated with the ongoing operations of the airlines associated with the existing baggage system in the building area.

2. Conduct a thorough field check of the existing conveyors and their relationship within the existing system as well as their relationship with the configuration of the specified system.

3. Ensure that the design and installation of all conveyor equipment provides maximum access for operation and maintenance personnel.

B. Baggage Over-height Restriction Bars

1. Over-height restriction bars shall be installed on all conveyors equipped with overheight detection photocells, at the appropriate height to restrict passage of baggage exceeding the maximum bag height requirements. In all cases, the overheight bar support structure may be used for mounting of the overheight detection photocell. In public areas, the overheight restriction bar shall be installed on the non-public side of the associated fire/security door.

2. Over-height restriction bars shall be installed on all conveyors equipped with Out-Of-Gauge height detection photocells (i.e., the Re-input load conveyors in the CBRA), at the appropriate height to restrict passage of baggage exceeding the maximum bag height requirements. In all cases, the Out-Of-Gauge height bar support structure may be used for mounting of the Out-Of-Gauge height detection photocell.

C. EDS Spare Parts Overhead Hoists

1. Provide the design and installation of electric operated overhead hoist mechanisms within the CBIS locations, as illustrated in the contract documents, to support the servicing of the EDS machines with spare parts. These

overhead hoists shall be provided in a manner to assist in the daily maintenance/servicing of the EDS machines and the installation/removal of spare parts in and out of the EDS mezzanine area.

2. Reference the Structural drawings for the location of the beams and coordinate with the City of El Paso the installation of the electric operated overhead hoist mechanism (as required), so that it adequately and safely operates between the EDS machines.

3. Reference the Electrical Drawings for the location of the 480 VAC power associated to the hoists. Provide connection between the 480 VAC power sources to the hoists with a conductor bar system (Conductix-Wampfler Insul-8 system or approved equal) which will allow the hoist a full range of motion across the length of the hoist beams.

4. The electric operated overhead hoist mechanism shall include a heavy-duty trolley consisting of solid machined cast-iron wheels with sealed precision bearings for high strength and long-lasting rollability that can accommodate a 750 lbs (max) load capacity. The design and overall installation of the hoist mechanism shall be such that it provides appropriate safety measures that would prevent the trolley from falling in case of wheel failure.

5. The control station for each hoist shall be identified with a permanently attached white phenolic plate, engraved with black characters, providing the identification of the hoist with which EDS machines it is associated with and noting the max load capacity of the unit (in BOLD UPPERCASE TEXT) along with the intended use (e.g., hoisting EDS spare parts which do not exceed the load capacity of the hoist).

D. Stationary Plow Diverters

1. Bag presentation immediately upstream of the EDS device is critical to both successful bag scanning and in the reduction of jams at the EDS device entrance conveyor, to achieve this provide Stationary Plows.

2. The function of the Plow is to position or rotate baggage (to present the bag in the correct orientation) into the center of the conveyor prior to the entrance of the EDS device. The typical location of the Plow is illustrated in the Contract Drawings.

3. If the Plow is installed within a section of conveyors where bag tracking is a critical operation, the plow shall be designed and constructed in such a manner so as to not cause tracked baggage to move out the tracking window during the centering operation.

4. Special care must be taken in the plow design and installation to ensure baggage on the device shall not be damaged or snagged. Note that the design, manufacture and installation of the Plow must be such to ensure that the device is heavy-duty and shall withstand the abusive environment of a high volume baggage operation.

5. Plows shall have one fixed end and one adjustable end. The adjustable end shall extend or retract as need to accommodate the minimum and maximum sized baggage as specified within this document.

6. Submit the method by which the centering of the bag will be accomplished to the city of El Paso or its representative for review and approval prior to fabrication.

2.10 ELECTRICAL TECHNICAL REQUIREMENTS

A. Electrical Service to be Provided by the BHS Contractor

1. Power for the various subsystems shall be provided at locations shown on the Contract Drawings by the City of El Paso's Electrical Contractor. Each power distribution point (PDP) shall consist of cable in an appropriately sized junction box (supplied and installed by the City of El Paso's Electrical Contractor) connected at its source to an appropriately sized circuit breaker located at the building substation panel. The drop shall terminate with approximately 20' of coiled cable. The full load ampacity rating (FLA) shall be as indicated on the contract drawings (as part of the submittal process described elsewhere, verify the FLA requirements and notify the City of El Paso or its representative of any increase/decrease). Supply power shall be 480 volts, 3 phase, and 60 hertz. Verify and advise the City of El Paso and or its representative that the ampacity at each PDP is sufficient for the requirements of the system.

2. Provide and install all mains cable required from nominated Power Distribution Points (PDP) to the various BHS Distribution Boards and onward to the MCPs as necessary to meet requirements of the specification. The BHS Contractor shall be responsible for all electrical work "downstream" of the PDP locations including the BHS distribution boards, MCP and all other cabling in between. Size feeders from the power drops at 1.25 times the minimum NEC (or applicable local code) permitted size for the full-load amperage required. The BHS Contractor shall be responsible for all power connections from the various MCPs to all other BHS equipment including providing power to screening machines.

3. Provide and install all services, feeders and disconnect switches for branch circuits to each control panel, with separate circuits for each subsystem as specified and provide and install all panel boxes, wireways, conduits, conductors, transformers, breakers/fuses, and any other equipment and materials required to complete the electrical power distribution for the operation of the system. Refer to NEC Article 300 for wiring methods.

4. Careful consideration shall be made to the distribution of power to sub-systems and its load center source such that the failure of power source does not effectively stop the baggage system in an entire zone. PDP locations shown in the contract drawings show typical locations that the BHS Contractor may locate electrical field distribution panels.

5. The amperage shown for each PDP in the subcontract drawings shall be confirmed by the bidder in his bid submission. During the engineering phase, provide detailed power calculations for review and approval by the City of El Paso or its representative in an effort to reduce the PDP amperage provided and thereby reduce the power provided to the system. Coordinate the detailed power requirements including any reductions with the City of El Paso or its representative.

6. During design of power distribution to the various BHS sub-systems, coordinate with the building electrical supplier on distribution of emergency power to required BHS subsystems to enable operation of the required BHS subsystems to support the City of El Paso operational policy in a power outage condition. Provide and install equipment as necessary to connect to these emergency power supplies that will be located adjacent to the various main power sources.

7. Provide separate circuits for controlling programmable logic controllers (PLCs), BDDs, ATRs, and powered fire/security doors. Note that these circuits shall originate within the respective MCP.

8. Calculate the electrical power supply requirements on the basis of total connected load with a diversity factor. Size the conductors to ensure that the voltage drop does not exceed 3% at the farthest outlet of power, heating and lighting loads, or combinations of such loads. Also ensure that the voltage drop does not exceed 5% at the farthest outlet for both feeders and branch circuits.

9. Provide 120 volt, single phase, and 60-Hertz power for operation of the BHS control circuits.

10. Obtain the control power at each MCP by means of a transformer connected to the load side of the 480 volt input power.

11. All baggage systems that use programmable controllers shall be equipped with the appropriate number and size of power regulators to ensure that the power for the respective programmable controllers is properly conditioned. Regulators are to be of the type manufactured by the Sola Corporation (or approved equivalent).

12. All electrical components, devices, accessories, and equipment shall be listed, labeled and identified as suitable for use intended by testing agency acceptable to authorities having jurisdiction. This shall include MCPs and any control panels/cabinets, whether factory or contractor fabricated.

13. Provide a power distribution panel (including all necessary equipment e.g. circuit breakers) located adjacent to each of the EDS machines. Power to these screening machines shall be taken from the same source powering the MCP that controls the conveyor line that the screening machine is in. The EDS contractor shall obtain power for their machines from these panels and shall be responsible for cabling between the panels and their machines. Coordinate with the EDS suppliers to finalize the power requirement for the screening machines.

B. Raceways

1. General

a. Enclose all power and control wiring, including low-voltage wiring, in Rigid Metal Conduit (RMC), Electrical Metallic Tubing (EMT), Liquid Tight Flexible Metal Conduit or wireways. Intermediate Metal Conduit (IMC) is not acceptable.

b. Horizontal runs of conduit shall not be supported by power turns, their safeguards, or by any side guard that is designated to be removable for the purpose of maintenance access. Rack such horizontal runs and support them from the building roof or mezzanine steel in locations not interfering with the BHS, maintenance areas, or catwalk areas.

c. Install drops to motors or other devices adjacent to the nearest available equipment or building column. Mezzanine supported equipment may be electrically fed from below the mezzanine from racked conduit supported below.

d. Avoid conduit runs on the floor. Provide minimum clearance of 6" below horizontal conduit to the floor. The City of El Paso or its representative must approve exceptions to the above.

e. RMC and EMT Conduit runs must be mounted so as not to restrict maintenance access to the BHS equipment, conveyors and system/conveyor components that required servicing.

f. Do not run communication, low voltage (less than 30 volts), or DC control wires in the same conduit, wireway or Panduit with power wires.

g. It is acceptable to run 120 VAC minimum control wire and 480 VAC maximum power wire in the same conduit, wireway or Panduit provided it is in conformance with local codes and VFD manufacturer's guidelines, as applicable.

h. It is acceptable to run shielded 90 VDC clutch brake control wire and 480 VAC maximum power wire in the same conduit, wireway or Panduit provided it is in conformance with local codes and VFD manufacturer's guidelines in lieu of running these clutch brake DC control wires in a separate conduit or wireway.

i. Conduit runs must not be run or mounted on outside guards or perimeter chain guards of power turns.

j. Conduit runs shall be mounted on Unistrut using a two piece Unistrut strap or other means of fastening which is suitable for BHS applications as approved by the City of El Paso.

2. Rigid Metal Conduit (RMC)

a. Conform to all aspects of NEC Article 344 for RMC (or applicable local code).

b. Use a minimum 3/4" for all wiring.

c. Run all conduits parallel or at right angles to structural members and equipment.

d. Do not run conduits underground or in floor slabs unless provided for that purpose by the Building Contractor.

e. In public areas, make conduit runs inconspicuous by running under cover plates, behind conveyors or otherwise concealed from public view.

f. In non-public areas, run exposed conduit in protected locations to prevent damage by moving vehicles, equipment or maintenance personnel.

g. Use Rigid Metal Conduit in all areas of the BHS installation that are at elevations less than 8'-0" above the buildings local finished floor and in all areas that are exposed to vehicular traffic and possible damage by operating or maintenance personnel.

h. Use malleable iron or steel threaded fittings.

i. Include gaskets and covers for all fittings.

j. Use standard threaded couplings at all conduit joints.

k. Ensure that the ends of the conduit are cut square, reamed and joined butt-tight.

l. Electro-galvanize all conduit, elbows, fittings, couplings and nipples.

m. Make changes to conduit size only at pull boxes, distribution panels, or branches to motors. Do not use reducers for in-line reduction of conduit size.

n. Remote control, signaling and power limited circuits shall be installed in compliance with NEC Article 725, (or applicable local code) as applicable.

o. Support conduit at intervals not to exceed 10'-0". Every individual conduit section must be supported. Install conduit supported from building walls with a clearance of not less than 1/4" from the wall to ensure against the accumulation of dirt and moisture behind the conduit, using one-hole malleable iron clamps and clamp backs. For parallel conduit runs provide trapeze hangers or wall brackets fabricated from preformed channel with conduit clamps. Make anchors in concrete of the expansion shield type. Limit conduit run on a given conveyor to that, which is required for that particular conveyor or directly adjacent (downstream/upstream) to that particular conveyor.

p. Appropriately sized insulated bushings and jumpers shall be installed on all conduits and conduit fittings that enter MCP(s), workstation/computer cabinet(s), outlet boxes, disconnects, or j-box/pull box(s).

3. Electrical Metallic Tubing (EMT)

a. Apply the above requirements for Rigid Metal Conduit to EMT except as noted below:

1.) Use rain and concrete type compression fittings with steel compression nuts.

2.) Use insulated throat type connectors with case hardened nuts.

3.) Use minimum size tubing of 3/4" diameter.

4.) Use EMT only in areas at elevations greater than 8' above the buildings local finished floor and not exposed to vehicular traffic or possible damage by operating and maintenance personnel.

5.) Appropriately sized insulated bushings and jumpers shall be installed on all conduits and conduit fittings that enter MCP(s), workstation/computer cabinet(s), outlet boxes, control stations, disconnects, or j-box/pull box(s).

6.) Ensure that motor disconnect boxes, clutch/brake safety disconnect boxes and control stations, outlet boxes, junction boxes, pull boxes and cover plates are compatible with the EMT used and conform to the National Electrical Code (or applicable local code) for minimum wiring space requirements and material thickness. Provide all boxes with screw fastened covers. Use NEMA 12 enclosures for interior equipment and NEMA 4 for all exterior equipment.

b. Conform to all aspects of the more stringent between this specification and NEC Articles 300 and 358 for EMT (or applicable local code).

4. Flexible Metal Conduit

a. Conform to all aspects of the more stringent between this specification and NEC Articles 300 and 348 (or applicable local code) for flexible metal conduit and fittings.

b. Use liquid-tight flexible metal conduit for connection to motors, photocells, limit switches or any device, which may be subject to vibrations or require adjustment after installation. The use of non-liquid-tight flexible metal conduit such as “green field” is not acceptable.

c. Do not exceed 3' in length.

d. Every section of flexible metal conduit must be clamped/supported.

e. Appropriately sized insulated bushings and jumpers shall be installed on all conduits and conduit fittings that enter metallic or non-metallic MCP(s), workstation/computer cabinet(s), outlet boxes, control stations, disconnects, or j-box/pull box(s).

f. Use minimum 1/2" for power wire.

g. Use minimum 1/2" for control wire.

5. Wireways

a. Wireways may be used in place of rigid conduit provided the application conforms to the requirements of National Electric Code Articles 376 and 378 (or applicable local code).

b. Use wireways with hinged, solid covers.

c. Position wireways to permit access with the equipment fully operational.

d. Fasten covers using captive screws or some other means of fastening not subject to loss such as clamps.

e. Do not use wireways in areas subjected to vehicular traffic.

f. It is not acceptable for any means of splicing in wireways such as terminal strips, wire nuts or other mechanical means of joining wires.

g. Metal dividers are acceptable in wireways as a means of separation between communications / DC wiring and AC wiring to ensure no induced voltages from the AC wiring to the communications / DC wiring.

h. Use lay-in type wireways to avoid the necessity of threading wires through end connectors.

C. Wire and Cable

1. General

a. Use stranded copper conductors of appropriate gauge, Type THHN or approved equal, with insulation rated for 600 volts. Use type XHHW only if required by code or the governing Airport Authority prohibits the use of PVC insulation. Conform to all aspects of the more stringent between this specification and NEC or applicable local code.

b. As an alternate to the use of stranded copper conductor wire, Type THHN or XHHW wiring as described above, it is acceptable to use stranded copper conductor wire, Type MTW, for internal MCP wiring.

c. Connect pre-wired electrical devices to terminal blocks mounted in junction boxes adjacent to the devices.

d. Do not use blade connectors (such as but not limited to fork or ring style) for connections.

e. It is acceptable to use multi-conductor cable for connecting portable electronic equipment. Refer to National Electrical Code (or applicable local code) for requirements on multi-conductor use.

f. Tag control and power circuit conductors with “machine” printed identification numbers at both ends of the wire. Tag method shall be of the sleeve or other permanent type submitted to and approved by the City of El Paso or its representative. The use of multiple tags to create a single tag is not acceptable.

g. Keep all wires on reels while being pulled. Do not allow wires to contact the ground or floor.

2. Minimum wire size

a.	Power	#12 gauge
b.	Control	#14 gauge
c.	PLC I/O	#16 gauge(Connections between I/O modules and terminal strips inside MCPs)
d.	Communication Circuits	#18 gauge

3. Splicing

a. Splicing of 480VAC power wiring is unacceptable. All 480VAC wire pulls shall be from the MCP to the device (e.g. from MCP to the individual motor safety disconnect).

b. Splices are acceptable when parallel type connections are used for "hot" and "neutral" control wires (e.g. power wire for photocells, and e-stop circuits within a subsystem).

c. Do not splice signal wires between I/O panel and component.

d. Terminate control wires on terminal strips or on screw connectors at each component only.

4. Spare Conductors

a. Provide a minimum of 5% spare conductors in all conduit home runs, with a minimum of two spare control wires and one spare power wire.

b. Coil all spare conductors allowing sufficient length to permit future connection.

c. Tag spare conductors as required above, i.e., each spare conductor is to be identified as a spare with its own unique wire identification number and field termination location.

5. Wiring Identification

a. Color code all electric wire and cable as follows:

1.) MCP Power Wiring: Line Side or Match Existing

a.) Apply the following to all MCP power wiring from source to line and load side of Main Disconnect fuses for MCPs. Verify color-coding of phase conductors on the line side to ensure compatibility with normal electrical supply available at the airport. Terminate the neutral, if applicable, at the terminal board:

Item	Wire Color
Phase A (480 VAC)	Brown
Phase B (480 VAC)	Orange
Phase C (480 VAC)	Yellow
Neutral	Grey
Mechanical Ground	Green

2.) BHS Field Components Power and Control Wiring: Load Side

a.) Apply the following to power and control wiring from the load side of fuses in MCPs to all devices that are powered and controlled from the respective MCP as follows:

Item	Wire Color
Power (To Motors and Control Transformers)	1. Black (with labeled ends indicating L1, L2 and L3 referring to their respective phases) and the Brown, Orange and Yellow colored wires of the 3 phases from the MCP 2. Run numbered, colored insulation (Brown, Orange and Yellow) wires to match phases. 3. Match existing conditions 4. As dictated by local codes.
AC Control:	Red
DC Control:	Blue
AC Neutral:	White
Mech. Ground	Green

b.) Submit to the City of El Paso or its representative for review and approval the wire color method to be employed for this project.

D. Grounding

1. Ground all electrical equipment to building ground mat by a dedicated equipment-grounding conductor installed in accordance with the applicable codes. Obtain from the appropriate airport authorities, local codes or the City of El Paso's Electrical Contractor the extent and type of grounding, wiring method and points of connection required.
2. Appropriately sized insulated bushings shall be installed on all conduits and conduit fittings that enter and exit the MCP or j-box/pull box.
3. Include a green 600V insulated copper ground conductor in each conduit (raceway).
4. Refer to National Electrical Code Article 348 (or applicable local code) for flexible metal conduit grounding requirements.
5. Refer to National Electrical Code Article 250 (or applicable local code) to determine grounding conductor requirements and sizes.

E. Support

1. Mount conduit supported from building wall using Unistrut type mounting channels to provide clearance to the wall.
2. Do not weld conduit to structural members.
3. Avoid conduit runs to the floor. Provide minimum clearance of 6" between horizontal conduit and the floor and do not allow runs to cross any walk or access aisles.
4. Support cordsets running to items such as, but not limited to, photocells and shaft encoders with cable mounting clips only. The cordset shall not be supported/secured with plastic wire ties.

F. Boxes

1. Provide outlet boxes, junction boxes, pull boxes and cover plates compatible with the conduit used. Provide boxes with screw fastened covers. Use NEMA 4 for all exterior equipment and NEMA 12 for interior equipment.
2. Conform to NEC Article 314 (or applicable local code) for minimum requirements for outlet boxes, junction boxes, pull boxes and cover plates.
3. Appropriately sized waterproof bushings/seals shall be installed on all conduits and conduit fittings that enter/exit the box(s).
4. Unused openings in junction boxes, raceways, cabinets, and pull boxes shall be effectively closed to afford protection substantially equivalent to the wall of the equipment.

2.11 ELECTRICAL COMPONENTS

A. Wiring Devices

1. Provide full size oil-tight operators.
2. As much as possible, use the same type sensors (such as but not limited to photocells and limit switches) to minimize the number and type of spares. Select sensors with the same mounting system wherever practical.
3. Use plug-in type electrical components wherever available. Do not use blade connectors (such as but not limited to fork or ring style).

B. Control Devices/Stations

1. Control Device Locations

   a. Control Stations and Control Devices shall be located as specified herein. The location of the Control Stations and Control Devices is to be such as to provide maximum possible access to the Devices for servicing of the devices. For example, all Jam Detector and Head End Sensor Photocell devices are to be mounted so that they are accessible from catwalks adjacent to conveyors. In certain areas, protective guarding may be required to protect the Control Stations and Control Devices. However, the design and installation of this protective guarding must not prevent quick access to the control devices for adjustment, servicing or replacements.

   b. The location, mounting and guarding of control stations and control devices must not in any manner restrict the access and servicing of any mechanical components of the BHS.

2. Control Device Mounting

   a. The mounting of Control Stations and Control Devices, shall comply with the basic requirements established in the Contract Drawings and as noted in the following:

      1.) Control Stations in Public View

         a.) All Control Stations located in the view of the public shall be flush mounted with stainless steel cover plates. Such stainless steel cover plates must be secured to the adjacent wall or conveyor trim member with either Truss or Oval Head Phillips stainless steel machine screws of appropriate size. Control stations located in the view of the public shall not be mounted on the top surface of the conveyor front cladding. Pan Head screws are not acceptable.

         b.) All Control Stations located in the view of the public at load conveyors (i.e. ticket counter conveyor control stations) shall be mounted flush to the adjacent wall in a location that someone operating the Control Device shall not have to lean over the conveyor to access it (either upstream or downstream of the load conveyor) or mounted on a stainless steel stanchion. Note that the design, manufacture and installation of the stainless steel shrouding on the collection conveyor must reflect these requirements.

      2.) Control Stations in Non-Public View

         a.) All Control Stations located on load conveyors in non-public view shall be mounted on the horizontal portion of a Control Station mounting assembly bridging the load conveyor. This assembly shall be located and built so as to also act as an Over-Height Photocell Mount and Bag Restraint. Consider the "chording effect" of baggage at the discharge end of a horizontal load conveyor feeding onto an incline conveyor when determining the location of such an assembly. The vertical element of the assembly may also be used for the mounting and protection of head end photocells, if applicable.

         b.) All Control Stations located on Flat Plate make-up devices in non-public view shall be mounted on a Control Station mounting assembly. Design, manufacture and installation of the Control Station mounting assembly for racetrack applications must be such as to provide a "solid", well braced mounting for the related Control Station and Control Devices. Note also that the Control Station mounting assembly must provide a minimum vertical bag clearance of 36" above the surface of the racetrack device. See contract drawings for specific details.

      3.) Control Devices

         a.) All photocells shall be mounted in a vertical attitude with the LED photocell status indicator clearly visible to operation and maintenance personnel from the side of the associated conveyor or conveyor equipment. Photocells that are used for jam detection; baggage tracking, and the like are to be mounted so that the center of the photocell beam is 2-1/2” or 3” from the top surface of the conveyor belt.

         b.) Limit switches that are used to sense the position of Fire doors shall be mounted as an external unit to the door adjacent to the track of the door so that the switch can detect when the door is in the fully open position.

c.) Indicating lamps, other than those associated with MCPs, are to be located as required to properly alert personnel.

d.) Shaft encoders used for determining conveyor speed must be directly coupled to either the head or tail pulley of the associated conveyor. Use of tension loaded friction drive types of shaft encoders is not acceptable.

e.) Start-up warning alarms (i.e., audible and visual) shall be located at strategic locations to alert operations and maintenance personnel of the imminent start-up of conveyor equipment. As a minimum provide start-up alarms at baggage input areas, on top of the MCPs and along the conveyor line right-of-ways (e.g., ceiling supported or mezzanine mounted conveyors.). Audible/Visual Fault Warning and Start-up Alarms may utilize the same control devices. However, the audible and visual indications shall differentiate between the two separate functions.

f.) Fault warning alarms (i.e., audible and visual) shall be appropriately located to alert operations and maintenance personnel of conveyor subsystem fault conditions. As a minimum provide fault alarms on top of the MCPs. Audible/Visual Fault Warning and Start-up Alarms may utilize the same control devices. However, the audible and visual indications shall differentiate between the two separate functions.

g.) System Start-up and Fault Indication Rotating Beacons: System start-up and fault indication beacons, with amber globes, shall be located on top of the MCPs, at the baggage input areas and along the conveyor right-of-ways (e.g., ceiling supported or mezzanine mounted conveyor equipment).

h.) Emergency Stop Switch Rotating Beacons: Emergency Stop Switch beacon with red rotating globe shall be mounted on top of the associated subsystem MCP.

3. Types of Control Devices

a. Pushbutton Switches: All Momentary Contact Pushbutton switches shall be of the Allen Bradley Series 800T type (or Square D 9001K series, or equivalent as reviewed and approved by the City of El Paso or its representative). The color coding for the Pushbuttons shall be as follows:

Function	Color
Start/Re-Start (non-public locations)	Green (flush head)
Normal Stop (non-public locations)	Red (flush head)
Alarm Silence (non-public locations)	Yellow (flush head)
Lamp Test (non-public locations)	Gray (flush head)
Jam Reset (non-public locations)	Orange (flush head)
Others (non-public locations)	Black (flush head)

b. Illuminated Pushbutton Switches: All Illuminated momentary contact pushbutton switches shall be of the Allen Bradley 800T - PA16 type switch with guards (or Square D 9001K series, or equivalent as reviewed and approved by the City of El Paso or its representative). The color coding for the Pushbuttons shall be as follows:

Function	Color
Start (for initial startup conditions at public areas)	Green
Jam Reset	Amber
Emergency Stop Reset	Red
Over-Height/Over-Length Reset	White

c. Emergency Stop Pushbutton Switches: All Emergency Stop pushbutton switches shall be of the Maintained Contact, "Push to Stop" Illuminated Red Mushroom Head switch, Allen Bradley 800T - FXP16RA1 type (or Square D 9001K Series, or equivalent as reviewed and approved by the City of El Paso or its representative). Note that the Emergency Stop pushbutton switches must be equipped with a manual lockout clip manufactured by the switch manufacturer for locking the switch in the “conveyor off” position.

d. Selector Switches: All Selector Switches shall be of the appropriate series based on the application, as specified, and of the Allen Bradley 800T type switch (or Square D 9001K Series, or equivalent as reviewed and approved by the City of El Paso or its representative).

e. Key Operated Switches

1.) "Off/On Function" and "Start Function" Key operated Switches for application in Public Areas shall be of the type manufactured by the Best Lock Company (or Square D 9001K Series with Best Lock Company core, or equivalent as reviewed and approved by the City of El Paso or its representative) but must use a six-pin lock cylinder and core. The City of El Paso will provide the final Operational Core. The Construction Core, normally supplied with the lock, must be removed before the project will be accepted. The switch must provide a spring loaded center return.

2.) Key operated Switches for all functions other than the "Off/On Function" and "Start Function" in Public Areas shall be Allen Bradley type 800T, (or Square D 9001K Series, or equivalent as reviewed and approved by the City of El Paso or its representative).

f. MCP Indicator Lamps

1.) Indicator Lamps shall be of the Allen Bradley "Push to Test" Pilot Light type 800T - PST16, (or Square D 9001K series, or equivalent as reviewed and approved by the City of El Paso or its representative) with appropriate color coded lens as noted below for Status Maps or MCPs with less than five Indicator Lamps.

g. Emergency Stop Switch Indicator Lamps: Certain Baggage Handling Systems shall require the installation of Emergency Stop Switch indicator Lamps adjacent to lanyard operated Emergency Stop Switches. Such Indicator Lamps are to be of the type manufactured by Crouse - Hinds, Cat. #BDA - 15GP, (or equivalent as reviewed and approved by the City of El Paso or its representative) with Red Globes.

h. Audible Warning Alarms

1.) Start-Up Warning Alarms for mounting at Ticket Counter Control station locations shall be of the Sonalert device as manufactured by Mallory Company Stock #64F278 Type SC250ER, or Allen-Bradley DEC/DEP Series alarm 855P-B10DEC22 for continuous tone or 855P-B10DEP22 for pulsing tone, to be determined by the City of El Paso (or equivalent as reviewed and approved by the City of El Paso or is representative). For those Control Stations located in higher ambient noise locations, an alarm oft appropriate higher frequency and dB rating shall be used (or equivalent as reviewed and approved by the City of El Paso or its representative). Selection must be made based on actual survey of the location.

2.) Start-Up Warning Alarms for other locations shall be of appropriate frequency and volume levels for the application location (such as baggage make-up areas). Such Audible Warning Alarms shall be as follows:

a.) Baggage Make-up Areas: Edwards Bell #340-6N5. Allen-Bradley 855H Series horn, Catalog Number 855H-BA10CD. Federal Bell #46-500-WB (or equivalent as reviewed and approved by the City of El Paso or its representative).

3.) Audible Fault Warning Alarms shall be of a horn type of appropriate frequency and volume level for the application location (such as baggage make-up areas). Such Audible Fault Warning Alarms shall be as manufactured by Edwards Horn #876-N5, Allen-Bradley 855H Series horn, with Amber Beacon Catalog Number 855H-BCA10CDR5 or without Beacon 855H-BA10CD, or Federal

Vibratone Horn #350-WB (or equivalent as reviewed and approved by the City of El Paso or its representative).

i. Audible/Visual Combination Alarms: Combination alarms for start-up or fault warnings mounted to MCPs, EDS machines, or elsewhere as approved by the City of El Paso or its representative, may be Allen-Bradley 855E Series with 120 VAC control.

j. Limit or Proximity Switches: Provide precision oil tight plug-in type limit switches with contacts rated for a minimum of 10 amperes continuous duty at 120 volts A.C. Limit switches that are used to sense the position of fire/security doors are to be mounted as an external unit to the door adjacent to the track of the door so that the switch can detect when the door is in the fully open position.

k. Motor Safety Disconnect Switches Edit if no exterior equipment or no CB

1.) Provide motor safety disconnect switches of the 3-pole, heavy-duty type, horsepower rated and non-fusible with a quick-make and quick-break operating mechanism and a means of padlocking the switch in the OFF position.

2.) Provide a N.O. auxiliary contact for connection to a PLC input.

3.) Motor safety disconnect switches for motors equipped with soft start devices must have an auxiliary N.O. contact interlocked with the associated emergency stop circuit.

4.) Each Motor safety disconnect switch shall be identified with a permanently attached white phenolic plate, engraved with black characters, providing the identification of the conveyor with which the motor is associated. Dymo - type labels are not acceptable. Attaching the ID plate to the safety disconnect door is acceptable.

5.) Use NEMA 12 enclosures for interior equipment and NEMA 4 for exterior equipment.

l. Fire/Security Door Safety Disconnect Switches

1.) Provide safety disconnect switches of the 3-pole, heavy-duty type, horsepower rated and non-fusible with a quick-make and quick-break operating mechanism and a means of padlocking the switch in the OFF position.

2.) Provide a N.O. auxiliary contact for connection to a PLC input.

3.) Each Fire/Security Door safety disconnect switch shall be identified with a permanently attached white phenolic plate, engraved with black characters, providing the identification of the door it's associated with. Dymo - type labels are not acceptable.

4.) Use NEMA 12 enclosures for interior equipment and NEMA 4 for exterior equipment.

m. Relays: Use general-purpose industrial, panel-mounted relays with convertible contacts rated at 10 amperes continuous current at 120 volts A.C. Ensure that all relays are capable of manual operation.

n. Timers: Provide solid state timers or utilize timer functions by PLC logic. All timers are to be mounted within the appropriate MCP. Use of timer devices within photocells is not acceptable.

o. Variable Frequency Drives (VFD)

1.) A programmable Variable Frequency Device (VFD) shall be utilized to control the operation of three-phase induction AC motors for queue, power turns, merge conveyors and all conveyors in all bag tracking zones (sortation and EDS) where coasting of the conveyor would be detrimental to the operation of the baggage system. Dynamic braking shall be provided for all conveyors within the CBIS bag tracking zones.

2.) For incline conveyors, on which bags are being tracked, that are equipped with a Variable Frequency Drive unit "anti-roll back" provisions shall be provided on the associated gear box to prevent conveyor coasting.

3.) Provide an electric brake, wired separately from the Variable Frequency Drive power source, for

decline conveyors, on which bags are being tracked, to prevent conveyor coasting.

4.) Type of VFD utilized shall be UL listed and IEC compliant.

5.) Provide a means of dissipating drive shaft voltages and bearing currents to ground for all conveyors which are provided with a VFD to prevent premature bearing failures.

6.) VFDs shall be typically installed within the respective Motor Control Panel (MCP). To conserve MCP space VFDs can be installed remotely at the drive unit, the City of El Paso or its representative must approve this type of configuration.

7.) Provide the ability to program and monitor all drive parameters. Provide programming devices with pre-programmed parameters for various types of VFD programs (e.g. standard queue, merge) to allow simple downloading of such programs when replacement or reprogramming of a VFD is required.

8.) Provide a local keypad control for start, stop, speed reference and reverse functions.

9.) Provide dynamic braking resistors where required for faster stopping.

10.) VFDs shall be capable of permitting the appropriate number of engagement cycles per minute for the specific application under full load with no objectionable heating, overload tripping or other VFD faults. Factor this when designing the system and provide VFDs and dynamic braking resistors of a larger power rating if required to meet the application's requirements.

11.) Factor in heat dissipation when designing the MCP and if excessive heat is anticipated from the braking resistors, then mount them in a separate NEMA 12 (for interior equipment) or NEMA 4 (for exterior equipment) rated panel.

12.) When using VFDs, either an approved method of wiring by the VFD OEM shall be provided or VFD rated shielded cable needs to be used. Use Belden, O'flex or equivalent cable. The shield should be connected to both the motor and the Potential Earth ground on the AC drive.

13.) For cable length of 50 ft or more between the drive and motor, a minimum of 1 additional amp needs to be added to the drive rating to handle cable-charging current. For Cable greater than 100 ft in length, a minimum of 2 amps need to be added to the drive rating for cable charging current.

14.) If the transformer which is powering the MCP or MCC is greater than 10 times the drive rating, an input line reactor shall be provided for each AC drive.

15.) Enunciate all individual variable frequency drive (VFD) failures on the fault reporting system. Automatic resetting of certain faults shall be permitted; however, all such faults shall be enunciated and logged regardless of whether or not they have been automatically reset.

16.) Submit to the City of El Paso or its representative catalog cuts of the type of VFD proposed for review and approval.

p. Photocells (Photoelectric Sensors)

1.) Provide photocells of the self-contained, retro-reflective type using an infrared modulated light source with sensitivity adjustment and LED status indicator that is readily visible. Retro-reflective type photocells are to be used for applications where the distance between the photocell and the reflector is less than 10'.

2.) Photocell applications that require a scan distance of 10' or greater are to use a separate transmitter and receiver rather than the single retro-reflective photocell.

3.) Use photocells with quick disconnect cable for ease of replacement; the cable shall be UL recognized, 18AWG, one-piece molded design and be highly visible.

4.) Due to wiring constraints and noise on low voltage lines generating false triggers, DC type photocells are not permitted.

5.) Mount photocells to structural members or side guards using an adjustable bracket as supplied by the photocell manufacturer so that the photocell is mounted in a vertical, not horizontal, attitude. Alignment and status LEDs shall be easily visible for maintenance personnel. All sensors and cabling shall be firmly anchored and protected from equipment and personnel impact and from random forces imposed by maintenance personnel servicing the equipment or staff working in the area. Mounting and protection devices shall inhibit tampering with sensors and their setting by non-maintenance personnel.

6.) Photocell mountings are to be directly attached to the conveyor structure as required. Use of shims between the conveyor structure and the photocell mountings is not acceptable. No penetrations through the side guards or attachment by means of magnets or other non-permanent attachment methods shall be permitted for photocell mountings or mounting brackets.

7.) Hex head 1/4" - 20 bolts of appropriate length and related 1/4" - 20 hardware (flat washers, lock washers and nuts) are to be used for the mounting of the photocells. Use of round head bolts is not acceptable.

8.) Mount reflectors to side guards using brackets providing both vertical and rotational adjustment. No penetrations through the side guards shall be permitted for reflector bracket mounting.

9.) Where holes through side guards are required, the holes shall be a maximum of 1.5" in diameter and located so that the center of the photocell beam is located either 2.5" or 3” above the conveyor belt. The holes in the side guards shall be dimpled away from baggage flow to minimize the possibility of snagging a bag and causing a jam. Oblong openings in the conveyor side guards are not acceptable.

10.) Only one side guard opening per photocell and one side guard opening per related photocell reflector would be accepted. Any unused photocell/reflector openings in the side guards must be properly filled with a welded circular blank, ground smooth and properly painted.

11.) Locate photocells on the side of a conveyor having the lesser chance of contact by operating personnel. Guard photocells if susceptible to personnel contact. The photocells are to be located on the catwalk side of conveyors to ensure maintenance access.

12.) Do not attach the white phenolic plate photocell device ID plate to the plug-in type photocell or its wired base. Mount the ID plate on the side guard adjacent to the photocell.

13.) Provide photocells as required by the functional needs of the BHS. Photocells shall indicate a reliable life of over 10 million cycles, and be repetitive and unaffected by environmental conditions such as vibration, rain, humidity, cold, heat, dust and sunlight. Provisions shall be made to effectively accomplish the sensing of any of the typical types of airline baggage and packages. Photocell installation shall minimize vibration and shall provide protection for both the sensor and its associated wiring. Specifically, care shall be exhibited in the mounting of the photocell and its control wiring to minimize the hazard of damage from the moving of baggage, contact with associated components or by personnel working on or in the vicinity of the system.

14.) Use liquid-tight flexible metal conduit or a flexible cordset for connection of photocells to minimize vibration and shall provide protection for both the sensor and its associated wiring.

15.) Provide cordsets of an appropriate length to connect to photocells such that there is no greater than 12” of excess cable length remaining. The excess cable shall be coiled and secured to the associated conveyor with the use of cable mounting clips. Cordsets shall not be secured using plastic cable ties.

16.) Photocells shall not be subject to interference from standard communication systems employed at the airport location due to airport and airline radio ground communications, ground to aircraft communications, aircraft to aircraft communications or any form of radar equipment operation.

17.) For applications that require critical fail-safe operation (e.g. for EDS Applications), the following components must be used:

a.) Develop and program PLC logic to ensure that the PLCs are continuously crosschecking outputs from the photocells. The purpose of this code is to ensure failsafe operation of photocells, photocell output wiring, I/O cards, I/O racks, PLC communications, and PLCs themselves. This code shall be written in such a manner that the system will stop appropriate conveyors and alert personnel in the event that the photocell, I/O card, I/O rack, any communication cable or wire breaks, or PLC failure occurs. This code should also include programming to account for long baggage or multiple bags that may appear over length due to the absence of baggage gaps (stop conveyors if a bag length exceeds the maximum system bag length). In addition, implement software programming filters to prevent erroneous conveyor stoppage due to the distance between photocell mounting locations and bag straps (that may instantaneously break the photocell beam). All applications must be submitted for review and acceptance to the City of El Paso or its Representative prior to installation.

b.) (For applications requiring throughput of 10 bags per minute or less) – Allen-Bradley Area Access Control (AAC) units may be used. Catalog number 440L-T4F90018-Q for Transmitter and 440L-R4F90018-Q for Receiver.

c.) (For applications requiring throughput of greater than 10 bags per minute) – Allen-Bradley Safety Light Curtain units may be used. Catalog number 440L-P4D0300-N for this Point of Operation Control unit.

d.) As an option to (b.) or (c.) above: redundant Allen-Bradley Series 9000 transmitted beam photoelectric sensors with a diagnostic output may be provided. Implement PLC safety controls to prevent unintended use in case of a failure.

q. Shaft Encoders

1.) Shaft encoders used for determining conveyor speed must be directly coupled to either the head or tail pulley of the associated conveyor and shall be of appropriate industrial type.

2.) Install appropriate safety guarding on all exposed parts associated with the conveyor drive's rotating shaft and direct drive gearbox, in compliance with OSHA Standards 1910.219. Ensure that the proposed safety guarding does not restrict maintenance access and it is easily removable, as the location requires, for maintenance access. Submit shaft encoder attachment and guarding details to the City of El Paso or its representative for approval.

3.) Use of tension loaded friction drive types of shaft encoders is not acceptable.

4.) Provide cordsets of an appropriate length to connect to shaft encoders such that there is no greater than 12" of excess cable length remaining. The excess cable shall be coiled and secured to the associated conveyor with the use of cable mounting clips. Cordsets shall not be secured using plastic cable ties.

5.) Ensure the shaft encoder model chosen is applicable to meet the subsystem tracking criteria based on conveyor belt speed/resolution required (i.e. shaft encoders utilized for tracking within an EDS system (slow speed tracking area) may be a different model compared to those required for sortation system tracking (high speed tracking area)). Submit to the City of El Paso or its representative, the manufacturer's data for the proposed shaft encoder(s) for approval.

C. Electrical Device Identification

1. The electrical control stations, their related control devices, field wired control devices shall be identified with a permanently attached white phenolic plate, engraved with black characters, providing the identification of the control station or control device. Dymo-type labels are not acceptable. Do not attach the white phenolic plate to any field device that can be easily replaced due to failure ((i.e. plug-in type photocell or its wired base) as this would also require the removal and reattachment of the ID plate), attach the plate to the side guard or non-removable structure adjacent to the device.

2. The electrical control stations, their related control devices, field wired control devices and the electrical control devices mounted within the BHS related motor control panels (MCPs) shall use the following device

identification format and designations. The format and identification that are used in this specification are to be used throughout the BHS project and are to appear on the designated equipment and the entire project related documentation.

a. Control Stations

1.) Control Stations shall be identified with the prefix CS followed by the actual Conveyor or BHS Equipment Identification Number to which the Control Station is related. For example, CS/TC1-6 identifies a Control Station located on Ticket Counter Subsystem #1 related Conveyor #6. Note that when there is more than one Control Station associated with a Conveyor or BHS Device, alpha designators will also be used. For example, CS/TC1-6A, CS/TC1-6B, CS/TC1-6C signifies that Ticket Counter, Subsystem #1 related Conveyor #6 has three Control Stations. The "A" alpha designator identifies the Station related to the charge end of the Conveyor while the last or highest letter indicates the Station closest to the discharge end of the Conveyor.

2.) Each Control Station shall be identified with a permanently attached white phenolic plate, engraved with black characters, providing the identification of the Control Station. Dymo- type labels are not acceptable.

b. Control Station Devices Verify all CS device types are in table

1.) Control Station Devices shall be identified as follows:

Control Station Device	Identification
Start Re-Start Pushbutton	SPB
Normal Stop Pushbutton	PBS
Emergency Stop Pushbutton	EPB
Reset Pushbutton	RPB
Selector Switch	SSW
Key Operated Switch	KSW
Sonalert Warning Device	ALM
Bag Advance Switch	BAS
Alert Light Reset	LPB
Reverse Start/Re-Start Pushbutton	PBR
Lamp Test Pushbutton	TPB
Alarm Silence Pushbutton	APB
Door Close Pushbutton	CPB
Door Open Pushbutton	OPB
Forward Jog Pushbutton	JFB
Jog Pushbutton	JPB
Jog Selector Switch	JSW
Print Tag Pushbutton	TPB
Colored Indicator Light (the first letter of the lamp color will appear instead of the underscore)	LT_

2.) Note that the above Control Station Device designations are to appear on all electrical drawings, including wiring and schematics.

3.) Control Station Control Devices (pushbuttons, pilot lights, switches and audible alarms) identification descriptors shall be clearly identified by permanently attached white phenolic plates,

engraved with black characters, except emergency stop devices which are to be red with white letters, showing their operational relationships to the system(s) or subsystem(s).

4.) All e-stop pushbuttons shall clearly indicate all conveyors affected by that e-stop (i.e.: TC1-1/TC1-8 indicates that the E-stop will stop conveyors TC1-1 through TC1-8). Dymo - type labels are not acceptable.

5.) All Jam reset pushbuttons shall indicate the conveyor segments, which are controlled by that jam reset control station.

6.) Control Station Control Device Function I.D. Tags must be positioned for ease of reading. Align the tag's legend so that it is legible (oriented) from the operator's access side of the control station.

c. Field Wired Control Devices Verify/Delete device descriptions

1.) Photocells shall be identified as PE followed by the Identification of the Baggage Handling Device or Conveyor on which the Photocell is mounted.

2.) Limit Switches shall be identified as LS followed by the identification of the Baggage Handling Device or Conveyor to which the Limit Switch is related.

3.) Warning Alarms shall be identified as WA followed by the Identification of the Baggage Handling Device or Conveyor to which the Warning Alarm is related.

4.) Lights shall be identified as LT followed by the identification of the Baggage Handling Device or Conveyor on which the light is mounted.

5.) Hour meters shall be identified as HM followed by the identification of MCP to which the hour meter is related.

6.) Bag Status Displays shall be identified as BSD followed by the identification of the Baggage System Conveyor to which the Console is related.

7.) Emergency Stop Lanyards shall be identified as EL followed by the identification of the Baggage System Conveyor on which the Emergency Stop Lanyard Limit Switch is mounted.

8.) Run Lanyards shall be identified as RL followed by the identification of the Baggage System Conveyor on which the Run Lanyard Limit Switch is mounted.

9.) Shaft Encoders shall be identified as SE followed by the identification of the Baggage System Conveyor on which the Shaft Encoder is mounted.

10.) Hand Held Scanner Guns shall be identified as SG followed by the identification of the Baggage System Conveyor to which the Hand Held Scanner Gun is related.

11.) Security Card Readers shall be identified as SR followed by the identification of the Baggage System Conveyor to which the Security Card Reader is related.

12.) Motor Safety Disconnect Switches shall be identified as "MSD" followed by the identification of the Baggage System Conveyor to which the Motor Safety Disconnect Switch is related.

13.) End Safety Guards shall be identified as ESG followed by the identification of the Baggage System Conveyor to which the End Safety Guard is related.

14.) Field Wired Control Devices (Security Card Readers, Photocells, Limit Switches, and Bag Status Displays) are to be clearly identified by permanently attached white phenolic plates, engraved with black characters with the control device I.D. Dymo type labels are not acceptable.

15.) All field installed Junction Boxes are to be provided with white phenolic plates engraved with black characters. The I.D. tags are to be located, so as to be easily read from the adjacent maintenance access areas. The I.D. tags must be consistent with the associated subsystem identifications noted on the wiring schematics.

d. Control Devices within Motor Control Panels and Workstations

1.) The identification of control devices and components such as relays, timers, transformers, power supplies, overloads, fuses, and PLCs within motor control panels, workstations and computer cabinets must be identified with I.D. tags.

2.) The I.D. tags must be constructed of a white phenolic plate engraved with black characters. Dymo type labels are not acceptable. The I.D. tags must be located so that they can be easily read when the related motor control panel, workstation or computer cabinet door is opened.

3.) The I.D. tags are not to be mounted on the covers of the Panduit wireways within the related cabinet or control panel.

4.) The I.D. tags for motor starters must contain the conveyor I.D.

2.12 MOTOR CONTROL PANELS (MCP)

A. General

1. All control equipment for the newly installed conveyors shall be housed within new motor control panel(s) for the associated subsystems. Ensure adequate capacity within the panel(s) for all necessary control devices. Provide MCP expansion cabinets, during the interim BHS conditions, if necessary, to accommodate the sequenced implementation between existing, interim and final works and where modifications to existing systems cause additional space, capacity or location requirements which are incompatible with the existing design.

2. Provide motor control panels that are UL listed employing NEMA 12 enclosures with fully gasketed doors for interior use or NEMA 4 enclosures for exterior located MCP(s) (or applicable local codes).

3. The MCP shall include a fusible disconnect switch (with Class J or R fuses) or molded-case circuit breaker for the incoming power supply. Additionally the fused disconnect switch for the MCP shall have the following features:

   a. Flange enclosure construction where the external handle, connecting bar/cable and disconnect switch are always connected regardless if the MCP door is open or closed.

   b. Provides a quick make / quick break design.

   c. Provides an indication at the circuit breaker or the fusible disconnect switch inside the MCP that shows the disconnect switch is in the ON or OFF position.

   d. Provides a color coded external handle which shall provide visual indication external to the MCP if the disconnect switch is in the ON or OFF position.

   e. Provides the ability for the external handle to be padlocked in the OFF position for to support Lock-out / Tag-out requirements.

   f. Provides a mechanical interlock to prevent the disconnect switch from being moved to the ON position unless the mechanical interlock is operated.

   g. Provides a mechanical interlock with the motor control panel door to prevent the motor control panel door from being opened with the disconnect switch in the ON position. The disconnect switch mechanical interlock to the door must have a manual over ride provision to permit the opening the door by qualified personnel using appropriate tools with the disconnect switch in the ON position.

4. Provide a polycarbonate Safety Shield with standoffs (or similar suitable finger-safe protection provisions) over the fuses / circuit breaker for the incoming 480v.

5. The exterior of the MCP must be painted. The interior of the panel or cabinet including the mounting panel shall be painted white.

6. Ensure that all Motor Control equipment complies with NEMA Standard ICS-1, ICS-2, UL publication 845 and other applicable standards of NEMA, UL, IEEE, ANSI and National Electrical Safety Codes (or applicable local codes).

7. Provide thermostatically controlled cooling fans or air conditioning units within the MCP cabinet to monitor and prevent internal temperatures from exceeding 125°F or component environmental limits, whichever is less based on an ambient temperature of 100°F (configurable). Provide replaceable or cleanable filters on the intake vents. Configure, through appropriate controls functionality, the cooling equipment to run when the respective MCP internal temperature reaches 100°F and provide an audible and textual alarm at the MDS or Touch Screen Terminal applicable when the temperature exceeds 130°F (configurable).

8. Provide integral MCP air conditioning units should they be required to prevent the internal temperature of the MCP from reaching 125°F. Provide and install condensing unit drain tubes to the nearest drainage line and coordinate hookup of same with building contractor.

9. Prior to the installation of overload heaters on the controllers, submit a motor schedule listing motor horsepower, voltage, phase, source of feed, circuit breaker size, disconnect size, conduit and wire size and overload heater size selected to be used.

10. Base interrupting rating of all circuit breakers, fused disconnect switches, motor control centers, and panel boards on short circuit calculations and ensure they are compatible and coordinate with base contract equipment. Refer to National Electrical Code Articles 110 and 430 (or local applicable code) to determine short circuit and overload requirements.

11. Mount fuses or circuit breakers for each magnetic starter directly above the magnetic starter.

12. A laminated card showing motor schedule with horsepower, fuse size and heater size shall be affixed to the inside of the MCP door.

13. The working space in front of the MCP panel shall be a minimum of 36". In all cases, the workspace shall permit at least 90 degree opening of the MCP doors. Refer to National Electrical Code Article 110 (or local applicable code) to determine working space requirements.

14. For any MCPs that are not located on a raised curb or raised floor, provide a concrete or galvanized steel plinth, pedestal, legs or similar means to raise the MCP a minimum of 4 inches above the floor to minimize the possibility of any ground water damage to the MCPs located outside of the BHS control room.

15. Appropriately sized waterproof bushings/seals shall be installed on all conduits and conduit fittings that enter/exit the Motor Control Panel(s).

B. Installation Requirements

1. Comply with the following design and installation requirements:

   a. Wire the line side of fuses or circuit breakers to a line side terminal strip for their incoming supply.

   b. Wire the load side of the magnetic starter to a load side terminal strip for the outgoing load.

   c. Connect all control wires to terminal strips designated for control wiring.

   d. Make vertical runs of power and control wiring within the panel on either or both of the right or left sides of the backboard.

   e. Run horizontal runs of power and control wiring between the horizontal rows of starter/fuse block units.

   f. Enclose all vertical and horizontal wiring in “Panduit” - brand plastic wireways.

   g. Make minimal wire runs to and from these wireways only to the nearest adjacent fuse block starter or terminal block.

   h. Use of “latching relays” is not acceptable.

   i. Use of “alternating relays” is not acceptable.

   j. Any “plug in” type device such as a relay, IEC starters or clutch/brake power supply must be equipped with a spring clip type restraint to prevent the “plug in” device from becoming loose in its socket.

   k. Splicing of control or power wiring within any MCP is not acceptable. All internal and external “field”

wiring must be terminated on the appropriate MCP terminal strips.

l. Appropriate sized waterproof bushings shall be installed on all conduits or conduit fittings that enter the related MCP.

m. All fuses will be of the appropriate type and size of the FRN or FRS dual element type.

C. Panel Identification

1. Each Motor Control Panel must be identified with an I.D. Tag mounted on the outside face of the Panel Door to the immediate left of the MCP Main Disconnect. The Tag shall identify:

a. MCP Designation

b. Related Baggage Subsystem

c. Related Conveyors or Devices Controlled by the MCP

2. Provide a permanently attached white phenolic plate, engraved with black lines and characters of the subsystem layout, on the door face of each new BHS Motor Control Panel, illustrating a graphic representation of the respective subsystem. Orientation of the graphic representation shall be the same as the actual subsystem. The MCP layout map shall be consistent with the Graphic Display of the MDS workstation equipment, which shall monitor the faults of the entire reconfigured baggage handling system (Outbound BHS).

3. The I.D. Tag shall be secured to the MCP door surface with a minimum of four rivets combined with an appropriate adhesive. Large tags shall require a minimum of four rivets, one for each corner of the tag.

D. Shop Drawings

1. Submit shop drawings to show:

a. General Layouts of new subsystem MCPs

b. Power, wiring and schematic diagrams

c. Outline and wiring diagrams of all special devices

d. Manufacturer's data for all components

E. Utility Outlet

1. In each enclosure or cabinet include a minimum of one appropriately fused grounded duplex receptacle utility outlet meeting locally applicable standards of 120 volt, 20-ampere capacity conveniently located within the panel.

2. The outlet is to be fed from the line side of the MCP, workstation, or computer cabinet power source (supplied by others unless otherwise noted) so that the outlet power will remain on regardless of the condition of the MCP, workstation, or computer cabinet power.

3. The hot wire providing power to the outlet shall be yellow. All terminations of this wire shall be guarded in order to protect personnel from accidental contact. Mount a warning placard on the outside of the panel, next to the disconnect switch stating: "CAUTION - THIS CONTROL CABINET CONTAINS YELLOW WIRES WHICH WILL REMAIN ENERGIZED WHEN THE DISCONNECT SWITCH IS TURNED OFF."

F. Lighting

1. Equip each enclosure or cabinet with an appropriately fused fluorescent lamp extending at least three quarters of the width of the panel. Operate the lamp by a switch located inside the enclosure on the latch side of the primary door so that the light becomes illuminated whenever the enclosure or cabinet door has been opened.

2. The lamp(s) is to be fed from the line side of the MCP, workstation, or computer cabinet power source (supplied by others unless otherwise noted) so that the fluorescent lamp will remain on regardless of the condition of the MCP, workstation, or computer cabinet power.

3. The hot wire providing power to the lamp shall be yellow. All terminations of this wire shall be guarded in order to protect personnel from accidental contact. Mount a warning placard on the outside of the panel, next to the disconnect switch stating: "CAUTION - THIS CONTROL CABINET CONTAINS YELLOW WIRES WHICH WILL REMAIN ENERGIZED WHEN THE DISCONNECT SWITCH IS TURNED OFF."

G. Control Devices

1. General

b. All MCPs are to be equipped with the following control devices regardless of the type of status monitoring being employed:

1.) System Ready Indication Lamp

a.) The MCP shall be equipped with a Green Indicator Lamp, which shall become illuminated to indicate that the system is ready for start-up and no faults are indicated on the MDS, Touch Screen Terminal or MCP System Status Map.

2.) MCP Re-Start Pushbutton Switch

a.) A green momentary contact start pushbutton switch is to be provided for each system or subsystem that is controlled from the MCP. The MCP Re-Start Pushbutton Switch shall not be able to start the subsystem from a non-operational mode. It shall only be able to Re-Start the subsystem if the MCP fault has been cleared.

3.) MCP Emergency Stop Pushbutton Switch

a.) Each MCP shall be equipped with a red illuminated maintained contact mushroom head pushbutton switch for each system or subsystem controlled from the MCP.

4.) Jam Indication

a.) Amber Indicator Lamp shall be used to indicate a Jam condition. The Jam Indicator Lamp shall become illuminated whenever a Jam Detector within the subsystem has sensed a Jam Condition. The Indicator Lamp shall remain illuminated until the Jam Condition has been corrected.

5.) Motor Overload Indication

a.) Blue Indicator Lamp shall be used to indicate Device or Conveyor Groups in which one or more Motor Overloads have tripped. The Motor Overload Blue Indicator Lamp shall become illuminated whenever a Motor Overload Condition develops and shall remain illuminated until the tripped Overload has been reset.

6.) Hour Meter

a.) Each MCP shall be equipped with an Hour Meter that shall record the amount of time (in hours) that at least one of the conveyors or devices controlled by the MCP is in operation

7.) Alarms

a.) Start-Up/Fault Warning Alarm(s): Each MCP shall be equipped with one amber rotating beacon and one audible horn to indicate imminent subsystem start-up or faults (such as but not limited to jams and motor overloads). The design of the control circuitry shall be such so that multiple faults will always activate the audible and visual alarms; i.e., if a jam condition has activated the fault alarms and the alarm silence pushbutton has been depressed but the actual fault has not yet been corrected, a second fault occurring after the alarm has been silenced shall again activate the alarm.

b.) Emergency Stop Warning Alarm(s): Each MCP shall be equipped with one red rotating beacon and one audible horn to indicate an Emergency Stop situation in the subsystem.

8.) Alarm Silence Pushbutton Switch

a.) Each MCP shall be equipped with a yellow momentary contact "Alarm Silence" pushbutton switch. Activating the Alarm Silence Pushbutton shall silence the Audible Warning Alarm. However, the appropriate Indicator Lamp shall continue to be illuminated until the Fault Condition (such as but not limited to jam, motor overload, and e-stop.) has been corrected.

H. System Status – MCP's

1. Status Monitoring on the MDS Workstation

a. Each conveyor subsystem's status shall be monitored by the BHS Maintenance Diagnostics System (MDS) workstation as detailed within this specification.

2. Touch Screen Terminal

a. Supply, install and program Touch Screen Terminal such as an "Allen Bradley", family of "PanelView" terminals (or equivalent as approved by the City of El Paso or its representative).

b. The Touch Screen Terminal shall be installed (locations) as indicated on the contract drawings. The Touch Screen Terminal shall be constructed as a NEMA 4 rating (outdoor) or NEMA 12 for indoor use.

c. The Touch Screen Terminal shall be capable of accurately and clearly depict the entire BHS. The terminal shall be configured to display system status as described below, in both text and pictorial format. Submit to the City of El Paso or its representative their functional design for approval.

d. The graphics portion of the terminal shall display, in real time, dynamic pictorial format, the operational status of the conveyors and make up devices that are connected to the system PLCs. Framed icons and specific conveyor I.D.s representing conveyor sections shall change color according to the following scheme. This shall immediately highlight problem areas so that the problems that arise may be corrected in the minimum amount of time:

Condition	**Color**
Fire Alarm	Red Blink
Motor Overload	Blue
VFD Fault	Blue
Shaft Encoder Fault	Orange
Jam	Yellow
Missing Bag Jam	Yellow
Over-length/Over-height	Flashing White
EDS Device Failure	Yellow Blink
BHS/EDS Fault	Yellow Blink
HSD Failed to Retract/Extend	Yellow
HSD Prox. Failure	Yellow
HSD Faulted	Yellow
Door Failed to Open	Yellow Blink
Door Failed to Close	Yellow Blink
Obstruction or Door Fault	Yellow Blink
E-Stopped	Red
Cascade Stopped	Magenta

Out of Service	Brown
Communications Loss (Individual Components)	Red
I/O Fault	Brown
Disconnect Off	Brown
Maintenance/Manual Mode	Brown
HSD Disabled by Operator or PLC	Brown
HSD Route All Mode by Operator or PLC	Brown Blink
Door Disconnect Off	Yellow Blink
Oddsize Conveyor Full	White
Conveyor Full	White
Normal Running Mode	Green
Oddsize Running Mode – Forward or Reverse	Green with Arrow indicating direction of travel
Door in Up Position	Green
Door in Down Position	Black
Auto-Stop	Black
Idle	Background Blue

e. The textual portion of the terminal shall display, in color coded text format, the operational status of the conveyors and make up device that are connected to the system PLCs. The terminal provides color indications of a predetermined fixed area of the system. The text portion of the terminal shall not interfere with the graphical display area. The textual portion of the terminal shall automatically scroll to show the most current fault. The textual display must also have a scroll back function to display faults that have scrolled off the display. The condition and the specific conveyor I.D representing the conveyor sections and system devices change color according to the following scheme. This shall immediately highlight problem areas so that the problems that arise may be corrected in the minimum amount of time:

Condition	**Color**	**Text Displayed**
Fire Alarm	Red Blink	FIRE
Motor Overload	Blue	MSP OFF/TRIPPED
VFD Fault	Blue	VFD FAULT
VFD Fault, EDS Infeed	Blue	IN VFD FAIL
VFD Fault, EDS Outfeed	Blue	OUT VFD FAIL
Shaft Encoder Out of Limits - High	Orange	SE HIGH
Shaft Encoder Out of Limits - Low	Orange	SE LOW
Shaft Encoder Fault	Orange	SE FAIL

Jam	Yellow	JAM
Missing Bag Jam	Yellow	MISSING BAG
HSD Failed to Retract	Yellow	FAIL TO RET
HSD Failed at Home	Yellow	FAIL AT HOME
HSD Failed to Extended	Yellow	FAIL TO EXT
HSD Prox. Failure	Yellow	PROX FAIL
HSD Position Fault	Brown	HSD POS FAULT
Over-length/Over-height	Flashing White	OVERLENGTH/OVERHIGHT
EDS Device Communication Failure	Yellow Blink	COMM FAILURE
EDS Too Many Errored Bags	Yellow Blink	ERRORED BAGS
EDS Not Ready	Yellow Blink	NOT READY
EDS Process Time Exceeded	Yellow Blink	PROCESS TIME
Door Failed to Open	Yellow Blink	FAIL TO OPEN
Door Failed to Close	Yellow Blink	FAIL TO CLS
Obstruction or Door Fault	Yellow Blink	DOOR FAIL
E-Stopped	Red	E-STOPPED
Safety Limit Switch Tripped	Red	SAFETY LS
Cascade Stopped	Magenta	CASCADE
Communications Loss (Individual Components)	Red	COMM FAILURE
I/O Fault	Brown	OFFLINE
Disconnect Off	Brown	DISC OFF
Out of Service	Brown	OUT OF SVC
Maintenance/Manual Mode	Brown	MANUAL
Door in Maintenance/Manual Mode	Brown	DOOR MAINT.
HSD Route All Mode by Operator or PLC	Brown	HSD DIV ALL
HSD Disable by Operator or PLC	Brown	HSD DIV NONE
Door Disconnect Off	Brown	DR DISC OFF
Door in Down Position	Black	DR CLSD
Door in Up Position	Green	DR OPEN
Conveyor Full	White	FULL
Oversize Conveyor Full	White	FULL
Normal Running Mode	Green	RUNNING
Head End Bypass	Green	RUNNING, BYPS.

Oversize Running Mode – Forward or Reverse	Green with Arrow indicating direction of travel	RUNNING FORWARD OR RUNNING REVERSE
Auto-Stop	Black	AUTO STOP
Idle	Background Blue	IDLE

f. The Touch Screen Terminal shall be connected to an audio/visual alarm, which will be activated when a system alarm is triggered (i.e. jam condition or E-stop).

g. Provide the Touch Screen Terminal with EPROM or similar to provide memory backup.

2.13 BHS WORKSTATION AND COMPUTER CABINETS

A. General Design Requirements

1. There shall be a control room that houses the BHS workstations, the BHS Sortation Control Servers and the MDS server consoles. These consoles shall be designed to reduce worker's fatigue.

2. Provide a system capable of supporting all the specified electronics.

3. The system shall be comprised of floor mounted base pedestals, below the work surface base modules, (minimum of 14U per module), and above the work surface, top modules assembled together to form an operator console.

4. The system shall have a minimum 1-inch thick MDF core, laminated work surface. The work surface shall be not less than 18" deep overall and should include a 3" deep wrist support covering the work surfaces entire front width.

5. Add-on top modules shall allow for a vertical or 12-degree or 15-degree tilt towards the user for all electronics placed above 6 feet in height from floor level.

6. Top modules shall be provided with removable equipment finishing masks or surrounds, cut to the size of the face of the specified electronics.

B. Standards

1. The system shall comply with Underwriters Laboratories (U.L.) listing 62Y4. Copy of the certificate of approval to be submitted upon request.

2. The system shall comply with Electronic Industry Association, (EIA), specifications for rack mounting ANSI/EIA standard RS-310.

C. Modular Pre-Engineering Construction

1. All components within the console system shall be:

a. Of pre-engineered modular construction i.e. constructed from a series of independent sectional components.

b. Be available from pre-defined set of manufacturers' model numbers.

c. Has been in common production for at least two (2) years prior to the date of submission.

d. Alterations to the design, either prior to or following installation, will be accomplished without the need for either welding or carpentry work.

e. Cables or conduits shall be able to pass through the complete width of the system without obstruction.

f. Modules may be supplied larger than 19" EIA specifications to accommodate specific electronics but all modules must be capable of supporting EIA standard 19" width rack mounted equipment, whether or not the originally specified electronics are of 19" width EIA dimensions.

g. All modules shall be constructed of a steel superstructure framework with external attachable side panels in steel or wood.

D. Self Supporting Skeleton Framework

1. The self supporting skeleton framework shall:

a. Be installed onto the site in advance of any external finishing panels. The framework shall be fully capable of supporting all specified electronics without the need for attachment of any external panels.

b. Be supplied with four sets of standard EIA rack rails per module, measured in standard rack unit (U) sizes, i.e. inner rack rails and outer rack rails in pairs, one pair of each type mounted at the front and rear of each modular section. Outer racks rails shall be removable.

c. Be capable of being supplied to site in knock down (flat packed) form and be capable of assembly using interlocking tie bars and secure with bolts, without welding or carpentry work.

d. Front and rear elevation individual modular frame sections shall be pre-welded, before delivery to site, and constructed of 14, 16 and 18 gauge sheet metal. Front and rear frame sections shall be secured together by use of removable14 gauge interlocking the bars and 1/4-20 bolts. All welds exposed to the front shall be filed smooth and sharp contours eliminated.

E. Mounting Hardware

1. Mounting hardware for the specified electronics shall be available upon request. Panel bolts; washers, and clips with captive nuts suitable for use with EIA standard punched rack rails shall be included.

2. Slide kits, where appropriate, (including drawers), shall be of ball bearing operation. Friction or roller type slides are not acceptable.

F. Instructions

1. Fully detailed assembly instructions in the English language shall be supplied with both written and pictorial descriptions for each item/model numbered component.

G. Installation Requirements

1. Comply with the following design and installation requirements:

a. Wire the line side of fuses or circuit breakers to a line side terminal strip for their incoming supply.

b. Connect all power wires to terminal strips designated for power wiring.

c. Connect all control wires to terminal strips designated for control wiring.

d. Make vertical runs of power and control wiring within the panel on either or both of the right or left sides of the backboard.

e. Enclose all vertical and horizontal wiring in “Panduit” - brand plastic wireways.

f. Make minimal wire runs to and from these wireways only to the nearest adjacent terminal block.

g. Splicing of control or power wiring within any workstation is not acceptable. All internal and external “field” wiring must be terminated on the appropriate workstation terminal strips.

h. Appropriate sized insulated waterproof bushings shall be installed on all conduits or conduit fittings that enter the related workstation.

H. Panel Identification

1. Each workstation must be identified with an I.D. Tag mounted on the outside face of the Panel Door on the upper left workstation door. The I.D. Tag shall identify the Workstation Designation:

2. The I.D. Tag shall be secured to the workstation door surface with a minimum of four rivets combined with an appropriate adhesive. Large tags shall require a minimum of four rivets, one for each corner of the tag.

I. Shop Drawings

1. Submit shop drawings to show:

a. General Layouts of the Workstation

b. Power, wiring and schematic diagrams

c. Outline and wiring diagrams of all special devices

d. Manufacturer's data for all components

J. Receptacles

1. In each enclosure or cabinet, include a minimum of one receptacle per electrical component powered from that enclosure/cabinet. The use of relocatable power taps/power strips or the chaining of power strips is not allowed to satisfy the above requirement

K. Utility Outlet

1. In each enclosure or cabinet include a minimum of one appropriately fused grounded duplex receptacle utility outlet meeting locally applicable standards of 120 volt, 20-ampere capacity conveniently located within the panel.

2. The outlet is to be fed from the line side of the UPS supplying power to workstation or computer cabinet supplied by others unless otherwise noted) so that the outlet power will remain on regardless of the condition of the workstation or computer cabinet power.

3. The hot wire providing power to the outlet shall be yellow. All terminations of this wire shall be guarded in order to protect personnel from accidental contact. Mount a warning on the outside of the panel, next to the disconnect switch stating: "CAUTION - THIS CONTROL CABINET CONTAINS YELLOW WIRES WHICH WILL REMAIN "HOT" WHEN THE DISCONNECT SWITCH IS TURNED OFF."

L. Lighting

1. Equip each enclosure or cabinet with an appropriately fused fluorescent lamp extending at least three quarters of the width of the panel. Operate the lamp by a switch located inside the enclosure on the latch side of the primary door so that the light becomes illuminated whenever the enclosure or cabinet door has been opened.

2. The lamp(s) is to be fed from the line side of the workstation or computer cabinet power source (supplied by others unless otherwise noted) so that the fluorescent lamp will remain on regardless of the condition of the workstation, or computer cabinet power.

3. The hot wire providing power to the lamp shall be yellow. All terminations of this wire shall be guarded in order to protect personnel from accidental contact. Mount a warning on the outside of the panel, next to the disconnect switch stating: "CAUTION - THIS CONTROL CABINET CONTAINS YELLOW WIRES WHICH WILL REMAIN "HOT" WHEN THE DISCONNECT SWITCH IS TURNED OFF."

M. Cooling Fans

1. Provide cooling fans whenever necessary to prevent internal temperatures from exceeding component environmental limits based on an ambient temperature of 100°F. Provide replaceable or cleanable filters on the intake vents where fans are used.

2.14 CONTROL SYSTEM DESIGN

A. General Design Requirements

1. This control system specification is intended to define the overall functional requirements of the system. The BHS Contractor is responsible for the definitive architecture and design which shall be subject to review and approval by the City of El Paso or its representative.

2. The term "Control System" shall be understood to cover the control of all conveyors and sortation devices, as part of the BHS. The Control System consists of both BHS computer and PLC control systems. The BHS

computer system shall act as the interface between the PLCs, the City of El Paso's reservation system, EDS Systems, FIDS, Building Maintenance Systems and any other external computer/control system that requires interface to the BHS. Coordinate the required computer interfaces/protocols with the City of El Paso or its representative or User Airlines

3. The design philosophy adopted for the control system is one of hierarchical control. Centralized supervisory and maintenance control shall be accomplished by fully redundant workstation computers. All the City of El Paso's Outbound conveyor and sortation subsystems shall be controlled by centralized programmable logic controllers (PLCs) with Warm Back-up for redundancy purposes. The outbound system status will be monitored by the central MDS workstation.

4. Baggage encoding shall be accomplished utilizing the ATR. Baggage tracking shall start at the ATR.

5. Identify the philosophy on which this proposal is based and clearly identify in detail the proposed control system architecture, the major components to be utilized and the methodologies employed for software development. In addition, the following philosophy shall be adopted in the BHS control system design:

    a. No single fault can bring down the entire system i.e. no single point of failure

    b. The system can be easily and economically enhanced to meet the future requirements in the next fifteen (15) years (e.g. add/increase hard drive(s), RAM capacity, increase operating speed (CPU upgraded))

6. Submittal of the proposal shall acknowledge the functional intent of the control system specification. Understanding the design shall be the result of modifications/refinements to the minimum requirements established herein. These changes shall not be the basis for increased cost requests.

7. Submit for the City of El Paso or its representative's review and approval, a comprehensive and detailed system description. This description shall include full details of operational procedures and control system provisions associated with the BHS, including but not limited to the following:

    a. Control system development and implementation master schedule

    b. Schedule of system hardware employed (main elements)

    c. Interfaces to the City of El Paso's reservation system, FIDS, BIDS or airport information management system, as required.

    d. Interfaces to EDS devices

    e. Interfaces to ATRs

    f. Hand Held Scan Guns for ETD Unload Conveyors

    g. Start-up/shutdown procedures

    h. Description of conveyor control logic outlined by subsystem

    i. Data input and output routines (i.e., management/maintenance information systems)

    j. Automatic operational/maintenance/defect/status routines (including format)

    k. Audio/Visual indications

    l. Control station layouts/functions/operations

    m. Fall-back/Anti-grid lock procedures

    n. Redundancy schematics/provisions

    o. Power supply requirements (including UPS schematics/redundancy and layout)

    p. BHS Computer operator interface routines

    q. Typical programming blocks

    r. Maintenance Diagnostics System (MDS) – i.e., screens

s. MIS Reporting Functionality with Sample Report Formats

t. Communications Highways – Redundancy, Schematics and product specifications

u. Proposed overall system architectural diagram clearly identifying both upper and lower level controls with respective data communication highways; at a minimum all system PLCs (for the security screening requirements, automated sortation, tracking and system status), all computers/PLCs with functions of each clearly identified (i.e.: sortation, GUI), printers, UPS', Hubs (Ethernet, serial), Drivers, ATR Scanner Arrays and all associated array components (i.e., tachometer boxes, photocells, multiplexers), Bag Status Displays, proposed networking. Additionally, submit a schematic diagram with an outlined description that will clearly define the approach that will be taken to satisfy the specified requirements for BHS redundancy.

8. Attend all on-site meetings as required and actively project manage the BHS control design and control design review process. Attend a minimum of four mandated control system meetings at the job site or the City of El Paso's office to review the Control System Functional Specifications and Electrical Control System design. Submit material to be reviewed at the meetings at least two weeks prior to the meetings. The control system meetings attendance will include as a minimum representatives from the BHS Contractor, the General Contractor, CM and the City of El Paso or its representative. The meetings shall review the following discussion items:

a. Design Considerations - Meeting No. 1

1.) Computer and PLC System Architecture

2.) Baggage System Computers including Redundancy requirements

3.) PLCs including Redundancy requirements

4.) PLC/Computer Systems - Power Requirements (including UPS requirements) and MCP sizes

5.) BHS Computer Interface Requirements

a.) Hardware Requirements

b.) Software Requirements

c.) EDS Security Systems Interface Requirements

d.) FIDS Interface Requirements

e.) BMS Interface Requirements

f.) Interface Requirements to the City of El Paso's Reservation Network

g.) ATR Hardware, Software and Interface Requirements

h.) Fire/Security Door and Security Card Swipe Interfaces

i.) Production/Testing Schedule

j.) Redundancy Requirements

b. Design Review - Meeting No. 2

1.) Updates to previous meeting

2.) Subsystem control functions Baggage Flow/Logic/PLC Control. As a minimum review the following:

a.) Start-up/Shutdown Procedures

b.) Jam Detection and "Restart" Procedures

c.) Cascade Operation

d.) Emergency Stop and "Restart" Procedures

e.) Audio/visual indications and locations

f.) Fire/Security Door and Security Card Swipe Procedures

g.) Fallback Procedures

h.) General Control Logic per Subsystem

3.) EDS Subsystems. As a minimum review the following:

a.) Tracking requirements throughout the EDS system for all levels of screening

b.) Start-up/shut down procedures

c.) Test Mode

d.) Insert Mode

e.) Bag ID# Assignment

f.) BMTT

g.) Fail safe measures

h.) EDS Device and EDS loop prioritization

i.) Fail Safe measures

j.) EDS Reports

k.) Anti-grid lock measures for EDS and Sortation Subsystems

l.) CBRA PTRI/ Touch Screen Terminal /BHS functionality

4.) Maintenance Information System (MIS) Review

a.) Reports to be developed as defined within this specification.

5.) Electrical System Drawing Review

c. Design Review - Meeting No. 3

1.) Updates to previous meeting

2.) Maintenance Diagnostics System (MDS) Review

a.) Specification Requirements

b.) Problem Resolution

3.) Electrical System Drawings Review

d. Design Review - Meeting No. 4

1.) Updates of previous meeting

2.) Outstanding Issues

3.) Final review of BHS/EDS Interface

4.) Subsystem Control Elements

5.) Maintenance Diagnostic System (MDS) Review: Sample Screens

6.) Maintenance Information System (MIS) Review: Sample Reports

7.) Electrical System Drawing Review

9. Sortation/Tracking Methodology Verify Sortation Methodology and Bag Tag Types required

   a. The design and sortation methodology employed for the sortation process shall be structured on the following, which includes a series of multi-level operational alternatives.

      1.) Operational Alternatives

         a.) Level 1: 10-digit IATA bag tag with computer interfaces to the City of El Paso's host reservation system/bag tag server system.

         b.) Level 2: Operational/Destination/Carrier Code/Flight number tag with computer interfaces to the FIDS/BIDS system (the City of El Paso's host computers or connection to the BHS failed).

         c.) Level 3: Operational/Destination/flight number tag with independent sort correlation tables located within the PLCs for tracking from the scanner arrays and manual encoding stations (both BHS sortation computers failed).

      2.) 10 Digit IATA Bag Tag:

         a.) The sortation system shall be designed to process baggage utilizing 10-digit IATA Bag Tags and information from the computer interfaces to the City of El Paso's reservation/bag tag server system.

         b.) Provide the ability of sorting baggage utilizing all the 10-digit IATA bag tag information as detailed within this specification.

         c.) The system sort rule requirements shall include the ability to sort 10 Digit IATA Tags by carrier code. This type of operation will only be utilized if the BSM link fails between the Airport's sort system and the DCS or if the carrier BSMs are not available. In both cases, if the system detects an IATA 10 Digit BSM tag, it shall be possible to sort based on the carrier code.

      3.) Special Operations Bag Tag (Fallback):

         a.) This sortation system shall be designed to also process baggage utilizing pre-printed operations bag tags that will employ up to ten numeric characters. The purpose of the special operations bag tag shall be to provide direct coding to a number of individual and future destinations as follows:

            (1.) Any outbound make-up device

            (2.) Problem bag/resolution area

            (3.) Fragile bag

            (4.) Lost bag/storage area

            (5.) Early bag storage

      4.) Make-up device.

         a.) Each flight shall be assigned to a make-up device (i.e., flat plate device). By receiving this information the BHS control system shall be able to route each bag to the appropriate make-up device at the decision point (i.e., high speed diverter) based on its flight number and assigned sort pier/make-up device. Early bags shall also be processed to sort pier/make-up devices based on their assignment.

         b.) The sortation process shall utilize the following destination assignments by all system functions (sortation computers):

            (1.) Each Make-up will be assigned a specific carrier(s) as specified by the City of El Paso or its representative.

            (2.) One default or "Jackpot" Make-up will be assigned for BHS Unknown baggage.

b. The design methodology employed for the sortation process of interline transfer baggage shall be based on two different operational alternatives:

1.) Machine Readable 10 digit IATA License Plate Tag: Baggage with machine readable, 10 digit IATA License Plate Tags shall be scanned by the ATR laser scanner array and automatically routed to the correct destination based on the flight/make-up assignment and subsequently tracked to the appropriate HSPD which shall divert the baggage to the appropriate make-up device. In order to obtain Baggage Sortation Messages (BSMs) for transfer baggage, the BHS control system shall interface with the network connecting the City of El Paso's reservation system. The control system shall determine the outbound flight number associated with each bag from the BSM and the control system shall then route transfer baggage to make-up devices based on the flight/make-up assignments. Invalid BSMs (e.g. BSMs not formatted per IATA standard) shall be rejected. The BHS computer system shall report all invalid BSMs to allow the City of El Paso the opportunity to investigate and rectify as required.

2.) In the event baggage does not have a machine readable tag or a valid BSM, at the sortation ATR, the bag shall be routed to the last or Jackpot Make-up.

c. The control system shall be designed to support all levels of sortation processing outlined herein.

d. Bags routed to make up devices will be routed in such a manner as to take the shortest route.

e. In the event of a failure of communications between the City of El Paso reservation network or FIDS to the BHS Computers, it shall be possible to manually enter and edit all required sortation information (e.g. flight schedule, make up assignments) at the BHS "PC" type workstations on pre-formatted, operator-friendly screens.

10. Control System Elements

a. The control system (comprised of the High Level Controls and Low Level Controls) shall comprise (as a minimum) the following elements:

b. The following elements are considered to be a part of the High Level Controls:

1.) Sortation Allocation Computers (SACs) which allow for the following functions:

a.) Automatic switching to a fully redundant SAC.

b.) Interfaces to the User Airlines/City of El Paso reservation system, BHS workstation(s) and baggage system PLCs.

c.) Provide real-time sortation control for the BHS.

d.) Provide direct interface with the sortation PLCs.

e.) Software program(s) as required to accomplish the functions specified herein.

2.) MDS Computers which allow for the following functions:

a.) Automatic switching to a fully redundant MDS computer.

b.) Collect and store data from the sortation and field PLCs to include in reports and status displays at the BHS workstation.

c.) Software program(s) as required to accomplish the functions specified herein.

3.) Sortation PLCs configured in a "warm back-up" mode which will allow for the following functions:

a.) Maintain a current flight table for sortation purposes in case of failure in a "fall back" mode of operation.

4.) BHS workstation which allow for the following functions:

a.) Software program(s) as required to accomplish the functions specified herein.

b.) Keyboard units for command and data input to the sortation control system.

c.) Video Display Units (VDU) for data output.

d.) High-speed line and laser printers.

e.) Network Interface

f.) Transfer switches/interface modules/selector switches.

5.) Communications highways

6.) Local Area Networks (LANs)

7.) ATR arrays with decoders and multiplexers, and interfaces to host computer/ PLCs

c. The new control system shall comprise (as a minimum) the following elements which are considered to be a part of the Low Level Network:

1.) Subsystem MCPs

2.) Programmable Logic Controllers (PLCs), which control the BHS by communicating with the device, level equipment (such as but not limited to photocells, motor starters, and encoders)

3.) Remote I/O located in the subsystem MCPs grouped by mainline.

11. Hardware: All control systems hardware for the BHS Computer and the BHS PLC systems, and associated purchased software shall be supplied by manufacturers whose products are supported locally, and can demonstrate a minimum of five (5) years' experience in providing control systems for conveyor systems of similar size. The City of El Paso or its representative must approve any equipment that does not meet this requirement.

12. Computer/Controls Electrical Supply

a. The supplied computer/control systems and equipment shall be compatible with, and operate reliably and effectively with, the normal electrical supply typically available. The equipment shall not be unduly sensitive to fluctuations in supply voltage which may typically vary by plus or minus ten percent (10%) of nominal values. Electrical power supply filters/conditioners and regulators shall be supplied for all equipment, which cannot meet the specifications stipulated.

b. All BHS Computers and all PLCs for outbound and EDS subsystems for which baggage tracking is required shall employ an Uninterruptible Power Supply (UPS) system(s) capable of storing data for a minimum period of two (2) hours should a power outage occur. All tracking data shall be stored in the PLCs during a power outage so that when power is restored and the conveyors begin running again, baggage will be sent to the appropriate output.

13. System Design Parameters

a. The system design shall pay particular attention to the following requirements (listed in random order):

1.) High throughput capacity

2.) Energy conservation

3.) Satisfactory environment

4.) Operational flexibility

5.) Component and system reliability (including back-up provisions)

6.) Adequate storage capacity upstream of merge points and EDS devices to absorb input peaks without system saturation.

14. Environment: All communication and equipment must be capable of functioning in an industrial

environment. Where special environmental conditions are essential for correct equipment operation (e.g. computer hardware), such requirements control must be clearly identified in the submittals identified in this specification. Factors such as dust, air contamination, and heat from local sources, abrasives, moving or falling objects, or vibration shall also be considered. Advise of the necessity for these provisions as well as the specific requirements for each system.

15. Responsibility for Supply and Installation

    a. Supply and install all Baggage Handling Control Room and Control System hardware. This includes control consoles and mounting structures for the monitors.

    b. The General Contractor shall supply all required hardware.

16. Responsibility for Programming

    a. Program the BHS Computers and PLCs for all conveying, sortation, and reporting functions associated with the project. Program the control system interfaces between the BHS and any other interfacing system (e.g., the City of El Paso's reservation network, BMS, FIDS, EDS).

    b. Program all monitoring system functions, associated with the BHS project. These functions shall include:

        1.) The provision of audible and visual system alarms at the workstation(s) (e.g. both on the computer monitor and on the printers).

        2.) Real time reaction to a failure and the capability of choosing alternate paths from the monitoring system.

    c. Submit the as-built programming documentation for the BHS computers, PLCs or system monitoring computers to the City of El Paso as follows:

        1.) Two complete (duplicate) CD sets covering all applicable computer, PLC and system monitoring programming documentation.

        2.) Two complete (duplicate) sets of hard copy documentation (both programs).

        3.) Software for the BHS computer systems as well as the BHS PLC control system including all PLC ladder logic shall be provided in both searchable .pdf format and software versions.

        4.) The system software shall be written using as much non-proprietary software as possible.

        5.) Delivered software shall include both executable files and fully commented source code for all applications (with the exception of purchased "off the shelf" software). Include all 3rd party software required to view or edit the source code. Establish with a reputable escrow service company a "software escrow account" for all withheld source code as well as documentation required to reconstruct the executables to invoke "prior intellectual property" rights and withhold source code for any system. This software escrow account must provide the City of El Paso access to the source code and documentation for a minimum of 10 years. Access to the escrowed information will be authorized in the event of the BHS Contractor's inability to correct design errors in the software, contract default, insolvency or termination of business activities.

17. System Redundancy

    a. Failure of primary redundant equipment shall not degrade the response time of the control system. In the worst-case scenario where every piece of primary equipment has failed there shall be no impact on system performance whatever the combination of the failure.

    b. The BHS shall reconfigure itself automatically after redundant hardware takes control (the secondary system will become the primary, the failed system will become the secondary when it comes back on-line). The BHS shall report any hardware failure, power failure, communication loss, or other fault condition, raise a critical alarm and inform the maintenance personnel through both display on the text monitor(s) and by an audible alarm.

c. When the system is running on the UPS(s) during a power failure, the BHS shall monitor the UPS(s) battery level, raise a critical alarm and inform the maintenance personnel through display on the text monitor(s) and audible alarm when the battery level becomes critical, this will allow the BHS Control Room operator sufficient time to do a systematic shutdown of the BHS computer system. The system should monitor the state of the UPS at all times to insure that the required power backup functionality is always available, raise an alarm on the MDS if the battery level becomes critical.

d. Backup equipment where provided shall be used as redundant equipment. All hardware, software, networking and system architecture shall comply with the requirements for a redundant system.

18. CBRA and Oversize CBRA Hand-Held Scanners

a. Provide hand-held scanners, without associated key pad functionality, for each Suspect Bag line's Baggage Inspection Table to permit the manual hand scanning of the 10-digit IATA bag tag of BHS Unknown security status bags and updating of the BHS computer system database dummy ID number with the 10-digit bag tag information and associated security screening status (i.e., "Cleared" or "Alarmed"). Each hand-held scanner shall be provided in a holster with a vibration isolated self-retracting tool balancer, similar to what is illustrated in the contract documents for coordinated with the City of El Paso and the TSA. These Suspect Bag line Baggage Inspection Table hand-held scanners shall be integrated with the CBIS workstations in the CBRA (e.g. NEDS or the like) to enable the TSA to bring up the bag identification on the CBRA workstations (Bag Status Displays and PTRI, NEDS, or the like).

b. Provide hand-held scanners, with associated key pad functionality directly on each hand-held scanner, adjacent to the Oversize Suspect Bag unload conveyor in the CBRA to permit the manual hand scanning of the 10-digit IATA bag tag or special operations bag tag and updating of the BHS computer system database with the 10-digit bag tag information along with the indication that the Oversize bag has arrived in the Oversize CBRA.

c. Provide hand-held scanners, with associated key pad functionality directly on each hand-held scanner, adjacent to the Oversize Clear Bag load conveyor in the CBRA to permit the manual hand scanning of the 10-digit IATA bag tag or special operations bag tag and updating of the BHS computer system database with the 10-digit bag tag information and associated security screening status (i.e., "Cleared") as well as to update the MUFIDS system, by outbound flight number, at the carrier's allocated make-up area that there is an oversize bag awaiting pick-up at the Oversize "Cleared Bag" runout area. If the bag does not have a 10-digit IATA bag tag affixed or the tag is unreadable, provide the ability to enter an 'Unknown Carrier' status for the bag to update the FIDS system to display at all make-up areas that there is an unknown carrier bag awaiting pick-up at the at the Oversize "Cleared Bag" runout area.

d. The CBRA hand-scanner guns shall be capable of reading all tag types that are utilized in the existing automated outbound BHS.

B. Computer and PLC Control System Architecture

1. General Edit for interfaces/Back up modes/Sortation requirements

a. The Control System Architecture for the Outbound BHS and In-line EDS security systems shall be one of centralized PLC design with distributed (remote I/O) and centralized BHS computer design. The control system will primarily be controlled by new PLCs, these PLCs interface with three types of equipment:

1.) BHS field devices (such as but not limited to motors, sensors scanners, and encoders)

2.) MDS computers

3.) Sortation allocation computers (SACs) (computers interfacing with various airport information systems (e.g. FIDS, BMS)).

b. The BHS conveyor control system shall be based on multiple Programmable Logic Controllers (PLCs), interconnected to each other by the BHS low-level data communication highways.

c. Local area networks (high level communications) shall be employed to provide data messaging between the BHS computers.

d. The airport's and /or Airlines provided high-level network should be used for connection to the Airport's and / or Airlines reservation system and all other networks (e.g. FIDS, BMS). Provide these data communication highways.

e. The BHS computers shall provide two (2) ports for each of the interfaces on each of the BHS server computers. Ensure that a single connection failure from either the FIDS, BMS does not impede the BHS operation.

f. The BHS computers shall serve four primary functions:

1.) Database processing

2.) Interfacing to the City of El Paso's reservation system and FIDS

3.) Monitoring of the status of the system

4.) Statistical information storage and presentation i.e. Reports

g. The Control system architecture presented herein is intended to convey the minimum functional system requirements. Consider the following:

1.) Centralizing the entire City of El Paso's outbound BHS computers and PLC equipment at the computer/operation room and utilizing distributed (remote) I/O.

2.) BHS computer system equipment (warm back up) located at the computer/operation room and outbound BHS PLCs and I/O located within the Motor Control Panels.

3.) Utilization of multiple PC based computers.

4.) Provide startup warning alarms and sufficient startup delay to comply with OSHA standards on all new and existing conveyors.

5.) Provide all necessary controls (such as but not limited to photoeyes, belt tachometers, and control stations) for new conveyors.

2. Baggage System Computer System Functional Description

a. The primary function of the Baggage System Computers is the control of the baggage flow in the BHS. Three modes of operation shall be established.

1.) Level 3 - Primary Operation

a.) Originating: Interface to the City of El Paso's reservation system (host computer system), which shall conceptually provide correlation of flight number to outbound baggage make-up devices from sort correlation tables.

b.) Translation of data received from the Scanner Arrays (ATR)

c.) Translation of data received from CBRA Hand-Held Scan Gun(s)

d.) Tracking verification.

2.) Level 2 - Primary Operation

a.) Interface between the Flight Correlation Table and the manual encoding station.

b.) The Baggage System Computer: System to provide sort correlation table to determine make-up device. On this basis, the baggage system computer shall determine the proper routing for the bag automatically. Database queries to determine correlation between ten digit tag information and flight details are not performed at this level.

c.) Translation of data received from Scanner Array (ATR)

d.) Tracking verification.

3.) Level 2 - Back-up Operation

a.) This back-up operation is used when both sortation computers are inoperable and the sortation must be accomplished through the PLC level.

b.) Translation of data received from ATR scanner arrays

c.) Tracking verification.

4.) Level 1 - Back-up Operation

a.) Interface between the Tag Correlation Tables, ATR scanner arrays.

b.) Translation of data received from scanner array (ATR)

c.) Tracking verification.

b. The Baggage System Computers shall also accomplish the following management information system tasks:

1.) Online statistical report generation

2.) Online maintenance report generation

3.) Offline sort table generation

4.) It shall be possible to both view on screen and print any report.

c. Each Baggage System Computer shall be identical in that emulation of any subsystem or function can be accomplished from any workstation.

d. In the case of main power supply failure the system must protect the complete database by means of battery powered data storage, such that re-entry of data is not required after power has been re-established. The battery powered storage system shall give a minimum storage period of 2 hours. The system is to automatically perform a safe shutdown when the UPS registers a low power situation.

e. A simple means to test computers for online capability and subsystem control (if a failure is suspected) shall be provided by means of an operator initiated self-testing routine i.e. using pull down menus. In addition, computers shall carry out automatic self-testing routines each time they are switched on for operation.

f. Provide a means to monitor Computer System Performance. Provide a warning on the MDS when the computer system may be close to a “Gridlock” situation, i.e. less than 20% memory capacity.

g. Processor and data storage capacity shall be sized to permit up to a 33% increase of processing and storage capacity. Further capacity increase shall be possible by addition of expansion modules.

h. The process computers shall have the capability of storing, sorting and processing up to a minimum of one million (1,000,000) current bag tag number records (both originating and transfer). The BSMs may not be stripped of unused fields but rather stored as issued from the City of El Paso’s system.

i. Fallback Procedure: In the event of a baggage sortation controller failure, the outbound subsystem shall be configured in such a manner as to assign any number of associated make-up devices as a default. This will allow for continued operation, despite the loss of baggage tracking and sortation ability.

3. Sortation Allocation Computers/MDS Computers

a. The sortation control system shall comprise all equipment that will be used for the tracking of all baggage input into the system baggage load points through to the makeup devices, based on information previously entered by an operator and information dynamically received from the ATRs or the hand held scanner device.

b. The sortation control system equipment and function shall provide for both visual as well as hard copy

fault and production monitoring at the workstation, as noted elsewhere in this section of the specification, for the entire outbound baggage system.

c. The task of the servers is the data administration on the entire control system. The servers handle the storage and retrieval of configuration data, graphics, and field switching records, BHS status, Flight information, BSM and BPM messages and other databases information. The computer systems require the use of "off the shelf" windows based operating system for both sortation allocation computers and MDS computers.

d. The following applications, as a minimum, shall have their own redundant set of servers:

   1.) MDS computers

   2.) SAC computers

e. Redundant sortation controller servers shall be located in the Baggage Control Room (BCR) or dedicated server room as directed by the City of El Paso or its representative. These servers form a redundant arrangement with direct link data communication through the redundant arrangement shall have a "heartbeat connection". Each set of servers keep identical data (data to include, but not limited to BSMs, Flight tables, and sort tables) so that in the event of a server failure, all data for operations are already resident and up to date with virtually no break except for time required for re-configuration. Failure of either main or backup server shall initiate a critical alarm (consisting of an audible alarm at the Operator Workstation and text/visual alarm annunciated on the MDS/Operator Workstation).

f. A dual redundant file server/ host computer configuration shall be provided for each sortation server set. In normal operation Server 1 will be the master. Should Server 1 fail due to a fault then, Server 2 shall take over control automatically with no loss of data or data integrity. Server 2 will then be the master and once server 1 comes back on line it will become the backup.

g. The redundant servers must be configured as high availability and in any case of failure switchover shall be seamless. The server configuration shall feature hot swappable components (hard drives, fans, power supplies and memory). Data storage shall feature as least the equivalent to RAID Level 5 redundancy.

h. Provide the latest available "state of the art" technology that will fulfill the system performance requirements, at time of procurement for the server hardware:

   1.) Hard disk storage shall be sized for storage of minimum 1-years storage of all data records with a 50% spare capacity. This may need to be upgraded from specified minimum at BHS Contractor's cost to cater for the specified archiving needs if found insufficient. Consider the total BSM messages received per day in sizing the hard disk space required.

   2.) Video adaptor card that supports at least two (2) monitors

   3.) Monitor: Two –(2) Flat 22" color monitors supporting video card

   4.) Quad Core processors, minimum of 2Ghz

   5.) Minimum 8 GB RAM expandable to 32 GB

   6.) High speed network interface cards (1000Mbps)

   7.) DVD +/- R/W Drive or equivalent

   8.) USB Keyboard and mouse. Specify Industrial keyboard/mouse if computers not installed in office-type environment.

   9.) Dual hot-swappable power supplies with UPS.

   10.) Dual hot-swappable fans

   11.) All operating systems, diagnostic software, antivirus software, disk management software tools, software drivers for Hard disk arrays and DVD/CD-ROM drives shall be provided.

i. All computer hardware shall be stored in standard off the shelf computer rack shelving systems that are

made for industrial computer component racking.

4. Workstation System and Equipment

   a. The Operator Workstations shall provide the operator interface to the Sortation Control and MDS systems. Operators shall be able to input and update sort correlation tables, including make-up number for each flight, early, current, hot, and late times on a flight by flight or global basis from any workstation. Operators shall also be able to produce statistical reports as specified herein. The Operator Workstations shall also serve as the Operator interface to the MDS allowing operators to monitor the status of the system, respond to faults, configure equipment control and all other operational modes. Production of custom reports from the databases maintained by the Sortation and MDS computers shall be possible with the use of off-the-shelf software supplied as part of the system.

   b. The workstations shall require log-on procedures with predefined user names and associated passwords. The workstations shall enable and disable certain functions depending on user name. Each Operator Workstation shall operate independently of the others, however, it shall be possible to determine the status of and users logged on to any other workstation (with appropriate user name and password).

   c. There shall be two (2) Operator Workstations in the control room, each shall be provided with two monitors and other hardware (such as but not limited to CPUs and keyboards) as described elsewhere in this specification. Each Workstation shall be capable of controlling the BHS. It shall be possible to configure either workstation independently in any of the modes listed below. Switching between modes shall take a maximum of five (5) seconds.

   d. The graphic and text screens provided shall be scalable to monitors/displays of differing sizes (i.e., allow for future replacement of monitors/displays of similar sizes without cutting off any information displayed on the workstation screens).

   e. Modes:

      1.) When accessing the MDS application - both monitors acting in concert to graphically display the entire system with a floating pointer between the two monitors. When zooming in on a section of the system, only the monitor that displays that section of the system in the overview screen shall show the larger scale area of the system requested by the operator while the other screen shall remain showing its half of the overview screen. In this mode, a three-line text bar shall appear at the bottom of one of the monitors to display system faults in text. The textual display shall scroll showing the most recent, unacknowledged or uncorrected, highest priority faults.

      2.) When accessing the MDS application - one monitor graphically displaying the entire system and one monitor providing a textual display of alarms. It shall be possible to configure the text display to display alarms based on different sort criteria such as but not limited to highest priority, unacknowledged/uncorrected, and by alarm time stamp. It shall be possible to configure either screen as the text or graphics monitor.

      3.) When accessing other applications - one monitor graphically showing the system status with a five line text bar appearing at the bottom of one of the monitors to display system faults in text. The textual display shall scroll showing the most recent, unacknowledged or uncorrected, highest priority faults. The graphical display shall be that display which was left on that monitor when changing from the MDS application to another application. The other monitor shall provide the display for the application being accessed at the Operator Workstation and the keyboard and mouse shall provide input for the current application. It shall be possible to configure either screen to display the above information.

      4.) When accessing other applications - one monitor providing a textual display of alarms. The configuration of the textual display shall be that configuration which was last defined for the textual display in the MDS application. The other monitor shall provide the display for the application being accessed at the Operator Workstation and the keyboard and mouse shall provide input for the current application. It shall be possible to configure either screen to display the above information.

f. All aspects of the BHS shall be controlled and monitored by the BHS workstations. The BHS workstation computer equipment shall be housed on a desk located in the control room.

g. The MDS computer system shall be off the shelf, currently supported by the vendor. The type of computer equipment included in the bid shall be clearly identified. It should be noted that the below listed requirements are minimum requirements, all hardware and software to be provided shall be considered to be "state of the art" at the time of the bid award. The minimum hardware specification for the workstations comprises the following:

1.) Processor: 2.4 GHz or higher.

2.) Minimum 8 GB RAM expandable to 32 GB

3.) Hard disk drive (HDD): SATA – two (2) devices with each having a minimum storage capacity of 2 TB.

4.) Video adaptor card that supports dual monitors

5.) Two –(2) Flat 22" Monitors

6.) Minimum 2 High speed Ethernet network ports (1000 Mbps or better)

7.) DVD +/- R/W Drive or equivalent

8.) USB Keyboard and mouse. Specify Industrial keyboard/mouse if computers not installed in office-type environment.

9.) High Speed Laser Printer

10.) Built-in I/O should have serial interface ports, parallel interface ports and USB ports.

h. A detailed description of the workstations shall be submitted to the City of El Paso or its representative prior to determining bid award.

i. All operating systems, diagnostic software, antivirus software, disk management software tools, software drivers for Hard disk arrays, and DVD/CD-ROM drivers shall be provided.

5. Workstation Control System

a. The design and operation of the Workstation Sortation Control System is to be modeled after the design and operation as basically described herein.

b. The description of operation and required equipment is provided as a basic guideline and should not be construed as being all-inclusive.

c. The Workstation Sortation Control System software/logic shall be structured on "off the shelf" products that are readily available. The license for these products and any non "off the shelf" software/logic used for this specific baggage sortation control system shall become the property of the City of El Paso. Such partnership will assure that the City of El Paso will have all logic/software source codes, diagrams, passwords, keys, listings, and all other appropriate documentation to fully maintain and modify this system after the expiration of the Warranty Period.

d. The Workstation shall be protected with a continuously running computer virus protection program. Submit details of the anti-virus protection program (i.e. manufacturer) to the City of El Paso or its representative for approval.

e. To accommodate the normal daily flight schedules, this system shall be capable of running 24 hours a day, 7 days a week, 52 weeks per year. It is understood that there will be periods during the day/night (dependent on the flight schedule) when the BHS system will not be processing baggage to allow periodic maintenance of the computer systems.

6. Workstation Basic Functions

a. All workstations shall house the same software and be interchangeable with any workstation. This

process shall be as simple as unplugging one workstation and plugging in the replacement.

b. All workstations (with the correct security level) shall have the ability to program the PLCs

c. The Workstation is composed of multiple computing nodes configured in a redundant, independent arrangement to provide the following basic functions:

1.) Collect data from the PLCs to include in reports and status displays.

2.) Provide Operations and Maintenance Reports, both printed and on-screen, reflecting system status in the areas of the following. It shall be possible to print any viewed message on the screen. Reports shall be capable of selecting and printing daily, weekly, monthly, quarterly and yearly updates. Specific report requirements are detailed elsewhere in this specification, however, in general, reports for the following shall be required:

a.) Throughput (number of bags processed for each subsystem). Selectable in 0 to 60 minute intervals.

b.) Equipment operating/malfunction performance summary for each subsystem and individual item

c.) System communications behavior

d.) Flight and Tag Table information

e.) EDS Report

f.) ATR report

g.) Day end report

h.) Active flight report

i.) Permanent flight report

j.) Sort area assignment report

k.) Bag tag not found report

l.) BSM report

m.) Computer and PLC status report

n.) Individual PLC status report

3.) Allow access to Sortation Table Menus to:

a.) Modify Tag Tables (this does not include the ability of editing the BSM database)

b.) Access 10-digit tag database

c.) Modify Flight Tag Tables

d.) Hold and release all flights

e.) Update late sort devices/piers

f.) Change flight status (closed, open, re-opened, or canceled)

g.) Import/Export flight tables

h.) Filter all available information in an easy-to-understand manner

i.) All pertinent information held in the Sortation Table Menus shall be reflected in the manual encoding stations during normal operation (fallback mode is the exception).

4.) Display system status and fault conditions on graphic screens, text screens, and printers, indicating

the following (this listing is not to be construed as being all inclusive):

a.) Communications Integrity.

b.) Tach/Shaft Encoder Status: Tach out of limits.

c.) HSPD Status: Overload, Failed Extended, E-Stopped, Failed at home, Divert All.

d.) Vertical Sorter Status: Overload, Failed Up, E-Stopped, Failed down, Jammed.

e.) Conveyor Status: Timed out, Running, Cascade, E-Stopped, Jammed, Overload.

f.) EDS Device Status: Timed out, Failed, Restart.

g.) ATR Scanner Status: Array failure, head failure, statistics per array and per head. Provide audible fault annunciation at the scanner array monitoring system (within the control room) or the BHS Computer workstation for any failure that occurs at the array. Failures include but are not limited to multiplexer switch over, photocell failure, tach failure, and head failure.

5.) Monitor PLC I/O to sense bag movement; issue sort directives to PLCs to direct bag movement.

6.) Interface to hand-held scanners to process 10-digit bar coded tags

7.) Allow maintenance and supervisory personnel password protected access to PLC programming software. Provide two (2) levels:

a.) Monitor mode

b.) Program mode

8.) Fallback baggage tag sortation.

9.) Provide a visual indication (e.g. hour glass) to indicate that the computer processors are processing and are running. Display status of a process or processor that is predicated on another process or processor.

d. Main Menu Options

1.) The following list depicts the menu structure available to an operator from the remote Workstation. Menus are displayed as pop-up windows when the operator presses the associated letter or uses the cursor and enter keys to make choices. The escape key allows one to back out of a menu or dialog box. Some menu choices lead to interactive dialog boxes where the operator may be prompted to enter additional data, i.e., Flight Table information.

2.) Additionally, accompanying text identifies and describes each available Main Menu option. This same text is also to be displayed when corresponding items are chosen from the Help Menu screen.

3.) Main Menu Options and Help Menu Screen. The following are samples of the types of main menu and help menu screens that should be available, submit to the City of El Paso or its representative examples of the screens that are to be utilized for review and approval:

a.) Using the Keyboard

b.) Utilities

c.) Operations Report

d.) Maintenance Report

e.) Problem Resolution Text

f.) Sortation Tables

g.) Sortation File Utilities

h.) Others as required to provide specified function

4.) Using the Keyboard/Mouse: The workstation system uses the keyboard or mouse to make menu selections and to accept data from the user.

5.) Utilities

a.) The Utilities Menu is a group of commands that are used for general-purpose needs. The options for this menu are noted below:

(1.) Clear all Statistics: Clears ALL of the statistics that are kept by the workstation, the sortation controller(s), and the programmable logic controllers. These statistics are kept on a daily basis. Once they are cleared, they cannot be recovered without a password entry and second level confirmation.

(2.) Change System Date: Used to set the system date on the workstation system.

(3.) Change System Time: Used to set the system time on the workstation system.

(4.) Coordinate System Times: Used to update the system time on all system sortation, computer and programmable logic controllers.

(5.) Change Sort Device Service Status: Used to take sort devices, or sort device diverters IN/OUT of service and reassign to alternative sort device.

(6.) Off Line Editor: Used to access the Off-Line Flight Table editor to make changes to the flight tables or add flights.

(7.) Change Alarm Printout Spacing: Used to change the spacing between alarm messages on the alarms printer.

(8.) Exit to PLC Programming Software: Used to exit normal operational mode and enter into a password protected, maintenance function, for PLC programming and diagnostics functions.

(9.) Run Diagnostic Tools: Used to automatically run computer and software diagnostic tools to check on functionality of workstation computers and software.

(10.) Others as required to provide specified function

6.) Operations Reports: The Operations Reports are used to monitor the daily functions of the system. Reports may be printed to the printer or displayed on the screen or can be transferred to a file in CSV format. Specific report requirements are defined elsewhere in this specification.

7.) Maintenance Reports: The Maintenance Reports are used to monitor the status of the pieces of equipment in the system and to diagnose any problems that might arise. Reports may be printed to the printer or displayed on the screen. Specific report requirements are defined in the Management Information System (MIS) section in this specification.

8.) Problem Resolution Text

a.) Problem Resolution Text is a tool to help correct problems that arise with the conveyor system. When a fault occurs, it will have a number next to the description that appears on the system alarm printer.

b.) A selection can be made from the Problem Resolution option on the Main Menu for the appropriate text.

c.) The text will state the problem, followed with the proper primary action that should be taken. As is appropriate, additional actions for correction of the problem will also be listed in the text.

d.) A brief listing of the problems includes the following. However, this listing is not to be construed as being all inclusive:

(1.) Jammed Bag

(2.) HSPD Jam

(3.) Chute Jam

(4.) Vertical Sort Jam

(5.) Vertical Sorter Failed Down/Up

(6.) Motor Overload

(7.) HSPD Failed at Home

(8.) Belt Tach/Shaft Encoder Failure (tach out of limits)

(9.) BHS Unknown Bag Jam

(10.)PLC Communications Line Failure

(11.)Off-Line Update Failure

e.) Operator shall have the ability to change, edit, and save all problem resolution text.

9.) Override Capability: It shall be possible, through appropriate operator input at the operator workstation to individually override automatic control of a conveyor thereby allowing the conveyor to run despite a sensor or other such failure. An appropriate graphical and text display shall be provided for conveyors in this "override" mode of operation. Override control of security critical components shall require appropriate high level password protection. Any overridden condition of a security critical component shall be prominently annunciated on the MDS. Startup warning and e-stop functionality shall remain intact despite an override condition.

10.) Sortation Tables: The Sortation Control "Sortation System Tables" menu gives access to the Flight and Sort Assignment Tables for the sortation system, based on information received from FIDS, the City of El Paso or other airlines. Using this menu, one can add, edit or delete flights and assign those flights to the system sort devices. In addition to the editing functions, one can also manage the saving and restoring of the Sortation System Tables on the hard drive of the sortation controller.

11.) Sortation File Utilities

a.) The Sortation File Utilities are a set of commands, which can be used to manage the sortation table fields on the sortation controller system. These utilities include the following functions:

(1.) Read Flight Table from ACTIVE: Instructs the sortation controller system to read the Flight Table stored in the ACTIVE initialization record and use it for sortation of bags.

(2.) Write Flight Table to ACTIVE: Instructs the sortation controller system to make current Flight Table permanent and use it in a daily ACTIVE initialization and start-up procedure.

(3.) Write Tag Table to ACTIVE: Instructs the sortation controller system to make the current Tag Table permanent and use it in a daily ACTIVE initialization and start-up procedure.

(4.) Read Flight Table from disk: Instructs the sortation controller system to read the Flight Table from any of hard disks on any workstation into memory. The operator shall be prompted to select a specific disk drive.

(5.) Read Tag Table from disk: Instructs the sortation controller system to read the Tag Table from any of hard disks on any workstation into memory. The operator shall be prompted to select a specific disk drive.

(6.) Write Flight Table to disk: Instructs the sortation controller system to write the Flight Table it is holding in memory to any of hard disks on any workstation. The operator shall be prompted to select a specific disk drive.

(7.) Delete Flight Table from disk: Instructs the sortation controller system to delete the

Flight Table from any hard disks on any workstation. The operator shall be prompted to select a specific disk drive.

(8.) Flight Schedule Download: Instructs the sortation controller system to download the current flight schedule to any workstation. The operator shall be prompted to select a specific disk drive and to confirm selection.

(9.) Flight Schedule Import: Instructs the sortation controller system to import the current flight schedule to the flight table. The operator shall be prompted to confirm selection.

C. Reservation Network Interface Functional Description.

1. The computer network is based on the utilization of intelligent workstations for check-in counter to flight assignments and make-up device to flight correlation (as well as other functions not related to the BHS). This information shall be downloaded to the BHS control system whenever relevant new information is entered at a workstation.

2. The BHS shall also receive flight schedules and updates to flight departure/arrival times from host computers whenever there is relevant new information.

3. Provide any equipment necessary to interface with reservation network such as but not limited to: computer interface cards, token rings and RS-232 cabling that is required to connect the BHS computer system to the host network and reservation computer systems.

4. Coordinate the specific host and reservation computer network information and requirements with the Special Systems Contractor and the City of El Paso.

D. FIDS Computer Functional Description:

1. The BHS computer system shall communicate with the FIDS systems to receive departures flight information including the following

a. Flight number

b. Flight departure time

c. Flight destination(s)

d. Arrival and departure date

e. Sort pier/make-up assignment (delete if this function is to be accomplished manually by the baggage control room supervisor)

f. Message sent time

2. The BHS computer system shall employ outbound sort correlation tables, which establish the correspondence between flight number, destination(s) and sort pier/make-up device number(s).

3. The BHS system shall be capable of accepting updates to flight information at any time and shall update the real time flight opening. All relevant adjustments to the sortation controllers shall be automatically implemented.

4. The FIDS system will download a schedule on a daily basis and send updates throughout the day on an as generated basis.

5. Provide communications between FIDS shall be accomplished utilizing hardware and BHS computer system interface cards and cables.

6. Coordinate the specific origin of the FIDS information and requirements with the Special Systems Contractor and the City of El Paso.

7. If five- (5) bag tags in a row (configurable) for a particular flight are read by the scanner array(s) but cannot be correlated to a flight number in the sort table (i.e. the flight was not downloaded by FIDS) display an alarm message on the text monitor stating that “flight number xxxx not found”. The BHS control room

operator then can either manually enter in the flight details or request another FIDS download/update.

E. EDS Security Screening Devices

1. The System shall interface directly with the EDS security screening devices. Allow for the transmission of data pertaining to individual bag security status (e.g. cleared, alarmed, or unknown). The Control System shall allow for bag routing contingent on security status.

2. Allow for the initiation of an EDS security screening report to be included with the provided MIS reports. The security screening report shall include information regarding the number of bags assigned each security status (e.g. cleared, alarmed, or unknown), and the resulting bag routing.

F. Building Maintenance System (BMS)

1. Connect the BHS to the Building Management System (BMS) gateway that the City of El Paso has installed throughout the airport. This gateway shall be used to provide any and all points monitored by the MDS to the BMS. Coordinate with the City of El Paso or its representative for the BMS interface requirements.

G. Building Fire System

1. The BHS System shall interface directly with the building fire system (via the City of El Paso's network). Coordinate with the Fire Marshal for the location of all fire zones and for the shutdown of conveyors and fire doors impacted by a fire alarm.

2. Clearly display alarmed fire zone(s) on the MDS display

H. Programmable Logic Controller (PLC) Functional Description

1. Provide Programmable Logic Controller(s) (PLCs) for direct interface between all input and output devices in the BHS. Wire emergency stop circuits through mechanical control relays which, when interrupted, will remove all power from the output modules of the PLC.

2. Provide each PLC with an EPROM or similar safeguard to provide memory backup.

3. Provide PLCs with Ethernet capability for connection to external devices, such as workstations.

4. Provide each PLC with a minimum of 35% excess memory or capacity for 25% expansion and each I/O with space for adding 25% more modules.

5. Input/output (I/O) modules shall have a visual indication of the status of each I/O point. The status displayed shall be for both signals input into each I/O module and the output signal from each I/O module

6. Provide a fully annotated printout as well as a software copy of the up-to-date PLC software and program.

7. All PLCs shall employ a battery back-up system capable of storing data for a minimum period of two hours, should a power outage occur.

8. In the event of an emergency stop or a power outage on a subsystem, the PLC shall retain all baggage tracking information such that upon restart of the conveyors, the subsystem shall route bags to the appropriate location(s).

9. Provide primary and backup PLCs. Each of the City of El Paso's Outbound System PLC/subsystem shall be provided with a (warm back-up) redundant fully programmed PLC, containing the same software/control functions of the respective primary PLC/subsystem. The minimum requirements for primary and back up (Warm back-up) PLC are described in the "Programmable Logic Controller Functional Description" section of this specification.

10. The primary function of the Programmable Logic Controllers (PLCs) shall be the control of all conveyors including, but not limited to:

    a. Tracking of baggage on conveyors from shaft encoders and strategically located photoelectric sensors for verification.

    b. Tracking shall be of shift register methodology; the use of FIFO shall not be implemented.

c. Jam detection

d. Normal Start/stop routines

e. Auto-Stop/Auto-Start timing circuits and start-up routines

f. Actuation of diverters, or vertical sorters.

g. Cascade stop control

h. Inch-and-Store control, start/stop routines

i. Control of associated feed conveyors

j. EDS/BHS interfaces

k. Confirmation of bag received on sort make-up devices

l. ATR Scanner Array/Scan Gun

m. Statistical reporting to the City of El Paso's host computers

n. Selection of alternate flow paths in the event of a failure

o. Self-diagnostics

11. All PLCs interface modules and I/O cards shall be located in distributed I/O cabinets as specified herein.

12. Commonality of PLC manufacturers shall be maintained utilizing the minimum number of individual models.

13. All BHS equipment associated with the outbound system shall have fully programmed redundant PLCs that are configured in "warm back-up mode". In the event of a primary component failure the warm back up has to be manually switched to become the primary component. Warm Back-up refers to a control component that is concurrently tied into the I/O structure along with the associated primary component. In the event of a primary component failure, the warm back-up component shall retain the latest current status of the related system and shall assume full operation after manual intervention. Up until primary component failure, no output from the back-up unit is transmitted. In the event of a failure, the warm back-up processor shall take over control of the system after it has been manually switched to become the primary component. The configuration of the PLCs shall ensure that all bag tracking information shall be continuously updated to both the on-line as well as the warm back-up unit. Only the on-line PLC shall be controlling the operating baggage system. It shall be possible to reset the failed processor without affecting baggage processing so that the system is once again in a fully redundant configuration. Failure of a processor shall be annunciated at the workstation or Touch Screen Terminal both visually and audibly.

14. Baggage Computer System Level 2 - Back up operation

    a. This back up operation is used when both sortation computers are inoperable and the sortation must be accomplished through PLC level.

    b. This level must be automatically switched on.

    c. When the scanners, hand laser guns input 4 (10) digit IATA tag numbers to the PLCs the following events will occur:

        1.) The PLCs will correlate the 4 (10) digit IATA tag data with the pre-assigned destination. This correlation table will be programmable so the destination can be operator selectable.

        2.) The PLCs will sort, track and route the bags to its pre-selected destination.

    d. Store the flight schedule in the PLC so that sortation by flight number can be processed if the sort controllers are down.

    e. The ability to sort by pier number shall be available in the event that the sort controllers are down.

    f. In the event that the sort controllers go down, the graphical and textual displays shall show an alarm that

displays "PLC Control."

I. Baggage Tracking Verification

1. Sortation System Baggage Tracking Verification

a. The system shall accurately track baggage to its output location. Ensure the shaft encoder model chosen is applicable to meet the sortation subsystem tracking criteria based on conveyor belt speed/resolution required (i.e. shaft encoders utilized for tracking within an EDS system (slow speed tracking area) may be a different model compared to those required for sortation system tracking (high speed tracking area)).

b. All bag tags read by the laser scanner arrays shall be verified for proper destination. In the event that a bag does not have a proper destination, transport the bag to the default or Jackpot Make-up.

1.) If a bag that has been dispatched from the check-in counters (if tracking is employed from the check in counter) gets out of its respective "tracking window", that bag shall be tracked as an "BHS Unknown bag" to the default output. The Baggage System Computer System shall generate appropriate fault messages indicating the "unknown bag".

2.) If a bag has been successfully read but fails to appear at any tracking photocell, that bag shall be identified as a missing bag by the tracking control system. Three – (3) missing bags in succession at the same tracking photocell shall cause the tracking control system to automatically stop the associated conveyors and declare a "BHS Unknow bag jam". Note that all missing bag occurrences shall be reported regardless if they are singular or multiple occurrences.

2. EDS Baggage Tracking Verification

a. The system shall accurately track baggage in the EDS matrix to its final decision location. Ensure the shaft encoder model chosen is applicable to meet the EDS subsystem tracking criteria based on conveyor belt speed/resolution required (i.e. shaft encoders utilized for tracking within an EDS system (slow speed tracking area) may be a different model compared to those required for sortation system tracking (high speed tracking area)).

b. If a bag gets out of its respective "tracking window", that bag shall be tracked as an "unknown bag" to level 3. The Baggage System Computer System shall generate appropriate fault messages indicating the "unknown bag".

c. If a bag has been successfully read by the ATR scanner or tracked from the level 1 device but fails to appear at any tracking photocell, that bag shall be identified as a BHS Unknown bag by the tracking control system. Three (3) BHS Unknown bags in succession at a tracking photocell shall cause the tracking control system to automatically stop the associated conveyors and declare a "BHS Unknown bag jam". Note that all BHS Unknown bag occurrences shall be reported regardless if they are singular or multiple occurrences.

J. Automatic Tag Reader Array (ATR)

1. The Automatic Laser Tag Reader Array (ATR) shall operate without malfunction within a temperature range of 32° F to 122° F (0-50°C) with a relative humidity of 0 to 99% non-condensing. If the scanner array or components cannot operate within this range, provide enclosures with the proper environmental control devices such as but not limited to heating, cooling, ventilation, and filtering of airborne contaminants to provide an operating environment to conform to the manufacturer's electrical, and mechanical requirements. If the enclosures are fitted with access covers that must be removed for maintenance, hinge such covers and utilize integral fasteners.

2. Provide a total of one (1) Outbound ATR.

3. Design the Scanner Array to meet or exceed the Bureau of Radiological Health Safety specifications for Class II laser devices. This project requires the use of diodes for the generation of the laser beam.

4. Consider the accuracy, reliability and maintainability in the selection of the Scanner Array. Make the Scanner

Array (and its major sub-assemblies) of modular design.

5. Design the ATR Scanner Array to be an array of moving beam scanners capable of decoding a minimum of 80 tags per minute being transported at speeds of 400 fpm with a minimum separation of 6" between items.

6. Ensure that the scanner is capable of line (unidirectional) scanning with a 54" height above the top of belt, a throw of 25 to 60", and a 35" depth of field.

7. If the decoders are not contained in the laser head, provide a minimum of two (2) decoders per twelve (12) laser heads. Link the decoders directly to the baggage system computer system, local PLC, or remote I/O interface, where applicable.

8. The arrangement of the laser heads within the scanner array provides two heads for top coverage of the field of scan above the conveyor, two additional top heads - one scanning at an angle 45° towards the upstream portion of the system - one scanning at an angle 45° towards the downstream portion of the system, two laser heads (one on each side of the conveyor) to provide side scanning and two laser heads mounted under the conveyor to provide bottom scanning. Provide additional laser heads as needed to achieve specified laser read rates as specified in this document.

9. Each of the laser heads shall be identically equipped to provide single zone optics.

10. Do not exceed error and “no-read” rates of 0.1% and 1.0% respectively.

11. Include the following in the scanner’s standard operating features:

    a. A communications interface modem compatible with a RS232 or RS422 serial port, user selectable.

    b. Read heads with Automatic Dynamic Focusing to provide for a larger depth of field as noted above to ensure that baggage tags within the cross section of the conveyor (the field of scan) are successfully read.

    c. Dynamic clamps or other signal enhancing hardware or software on individual read heads.

    d. Visual diagnostics (i.e. display monitors) at the BHS Control Room to provide maintenance data and statistical information about the scanner array’s performance. Employ either one separate statistical gathering network for all read heads or a single date line for each read head linked to the decoder for this purpose. As an alternate approach, display Scanner Array statistical data at the baggage system computer system.

12. Provide provisions for a laptop computer interface local to each ATR scanner array.

13. Do not allow any single failure to cause a total scan array shut down. However, report multiple failures of reads from a scanner array.

14. Each scanner array shall be divided into 2 sub-arrays (still contained in the same array). Scanner heads 1, 3, 5 and 7 should have their own photocell, shaft encoder, shaft encoder trigger box and multiplexer. Scanner heads 2, 4, 6 and 8 shall have identical equipment to the other half of the array. Scanner head numbering starts at the left bottom head (looking downstream) and is numbered clockwise. Scanner head 7 is upstream of the conveyor break and scanner head 8 is downstream of the conveyor break.

    a. For scanner arrays of greater than 8 heads, coordinate the head numbering with the City of El Paso or its representative.

15. Each multiplexer shall have a dedicated communication port on the sort controller computer. In addition:

    a. In the redundant configuration there will be two (2) communication lines per array connecting to two (2) serial communication ports on the sort controller computer.

    b. The multiplexer host communication port will also be connected to the PLC equipment for fallback sortation (Level 2 - Backup Operation) as described herein.

16. Design the read head array frame to allow for tilt and rotation of individual read heads +30° off axis. In addition, ensure that the mounting frame allows the position of the individual read heads to be shifted +/- 6"

off axis whether parallel or perpendicular to the direction of baggage flow. Variations from the above stated requirements will require the review and approval from the City of El Paso or its representative.

17. Protect the laser beam window apertures, where recessed, by a transparent surface-mounted lens cover to facilitate cleaning of dust and dirt. A laser beam window aperture with an integral sealed lens is also acceptable.
18. Equip upward-looking laser units (i.e., below conveyor) with blower units to remove dust and debris from the laser window apertures.
19. The scanner system must be capable of reading bar coded baggage tags as specified herein.
20. Prior to selecting a scanning device, demonstrate that the selected scanner system will successfully read bag tags specified in this section per Bag Tag Verification section 1.05.Q.
21. Any proposed alternate bag tag specification differing from that listed above will be subject to review and approval of the City of El Paso or its representative.
22. Scanner Arrays shall be equipped with data reconstruction software or similar enhancement software and shall have been previously installed on at least two other locations for an operating period of not less than one year.
23. Report any Scanner Array failure to the system monitoring system. Also report when ten consecutive no-reads have occurred.
24. All scanner heads shall have the ability to operate in self-card mode for setup and testing of Scanner Array.
25. No scanners shall be set up in self-card mode for normal operation.
26. All scanners shall be configured in the trigger mode of operation. The Trigger mode shall only send one message for each tag read per trigger cycle.
27. The Scanner Array will detect when a photocell or belt tach failure occurs and enunciate the fault condition both at the scanner array locally as well as at the workstation computer.

K. Scan Gun

1. All Oversize CBRA screening suspect bag unload and clear bag load conveyors shall be equipped with a hand held laser bar code scanning gun type device for the reading of bar coded baggage tags. This scan gun shall also include a keypad for data entry. The scanning gun shall be Symbol Technologies model number P460 (or approved equivalent).
2. All CBRA Baggage Inspection Tables (i.e., along the Suspect Bag conveyors in the CBRA) shall be equipped with a hand held laser bar code scanning gun type device for the reading of bar coded baggage tags. This scan gun shall not include a keypad for data entry. The scanning gun shall be Symbol Technologies model number LS2208 (or approved equivalent) / LS4004/RS232 (or approved equivalent).
3. Mount scan guns on a vibration isolated articulating arm structure. Connect the scanner itself to the arm with an umbilical, spring loaded flexible connector which will allow the operator free and easy access for encoding. Ensure that the gun can be retracted from the fully extended position to the home position without damaging the unit.
4. Ensure that the scan gun depth of field is a minimum of 18".
5. Employ a communications link as required to interface with the appropriate PLC and utilize an appropriate baud rate so as to ensure rapid communications with no perceivable encoding transaction delay time.
6. Bag tags shall have machine readable bar codes consisting of a 10-digit code, Fallback code. Therefore, the scanners supplied shall be capable of reading bag tags with bar codes having specifications as described elsewhere. Any proposed alternate bag tag specification differing from that listed above will be subject to review and approval of the City of El Paso or its representative.
7. Prior to selecting a scanning device, demonstrate that the selected scan guns will successfully read the

various configurations of bag tags.

L. Coded Baggage Tags

1. General Requirement

a. The bar coded baggage tag format shall comply with applicable recommendations of IATA/ATA Baggage Working Groups, where such recommendations exist. Baggage tags shall be of the man readable and machine-readable demand printed type. On-demand tag printing systems and equipment, and baggage tags shall be provided by the City of El Paso and will be consistent with IATA/ATA recommendations regarding baggage tag type and format.

b. For the machine readable portion of the baggage tag, a bar-code symbol shall be used comprising two identical bar code patterns set at a 90° angle to each other (in an orthogonal format) to maximize read rate at the scanner location. The bar code shall use the Interleaved 2-of-5 code, with ten (10) numeric characters, with a width ratio between wide and narrow bars not exceeding 2:1, and with a narrow bar width not exceeding .020".

2. Baggage Tag Format

a. 10 Digit Bar Coded Baggage Tag

1.) The 10-digit bar coded tags shall be of the on-demand printed type, employing ten (10) numeric characters and shall be of the self-adhesive or cohesive strap type. Bag tags may be of the direct thermal or thermal transfer type. Tags shall incorporate a tag number, information area, routing area, an identification/claim portion (except expedite tags), and removable stubs. The man-readable part of the tag shall contain information such as the flight number, three letter destination code and passenger name. Other optional information may be printed as required in man-readable form, such as intermediate transfer station three letter codes.

2.) Bar Code Construction

a.) It is intended that the Uniform Symbology Specification (USS) for Interleaved 2 of 5 published by Automatic Identification Manufacturers, Inc. (AIM) be used as the base specification for bar coded baggage tags. This specification is available from AIM affiliates in Europe, Japan, the Pacific, and the USA. One deviation from the USS 2 of 5 specification is described as follows:

(1.) Since it is the desire of the airline industry to accommodate the widest range of scanning equipment, the specified wavelength band should extend from 630 -670 nanometer (nm). This shall allow the use of laser scanners based either on Helium-Neon technology, or solid-state laser diodes.

(2.) Note: The USS Interleaved 2 of 5 specifications only requires that reflectivity measurements be made at 633 nanometers.

b.) Large sortation/identification bar code (both on-demand and preprinted tags) shall conform to the following specifications (large sortation/identification bar code shall be readable via fixed laser array and hand held scanner):

(1.) The bar code configuration used for large sortation bar code shall be the Interleaved 2 of 5 type.

(2.) The width of the face material shall be 2 inches (50.8 millimeters).

(3.) The narrow bar (element) size shall be .020 inch (0.508 millimeter) with an acceptable tolerance of plus or minus 5 percent. The wide element to narrow element ratio shall be no less than 2:1.

(4.) The text height (bar code height) shall be 1.88 inches (48 millimeters).

(5.) The quiet zone, as measured on the face material, shall be a minimum of 7 times the

width of the narrow bar element (.140 inch, 3.56 millimeters). A quiet zone 10 times the width of the narrow bar element is preferred (.200 inch, 5.080 millimeters).

(6.) Bar code orientation may be horizontal, vertical, or orthogonal (both). The orthogonal configuration is preferred for a higher read rate.

(7.) The print contrast signal shall not be less than 80 percent when measured at 633 nanometers.

c.) Small identification bar code (both on-demand and preprinted tags) shall conform to the following specifications (small identification bar code shall be readable via hand held scanner):

(1.) The bar code configuration for sortation shall be the Interleaved 2 of 5 type.

(2.) The width of the face material shall be 2.00 inches (50.8 millimeters).

(3.) The narrow bar element size shall be .010-.015 inch (0.25 - 0.38 millimeter). The ratio between wide and narrow elements shall be between 2.2:1 and 3:1.

(4.) Tag text height (bar code height) shall be a minimum of .254 inch (6.35 millimeters).

(5.) The quiet zone, as measured on the face material, shall be a minimum of 7 times the width of the narrow bar element (.070 - .105 inch or 1.778 - 2.667 millimeters). It is preferred that the quiet zone be 10 times the width of the narrow bar element (.100 - .150 inch or 2.54 - 3.81 millimeters).

(6.) Bar code orientation may be horizontal, vertical, or orthogonal (both). The orthogonal configuration preferred.

(7.) The print contrast signal shall not be less than 80 percent when measured at a wavelength of 633 nanometers.

b. Fall-Back Tag

1.) The bar coded baggage tag utilized by a number of the City of El Paso/user airlines shall contain the bags flight/ Make-up number encoded in the machine-readable portion of the tag.

2.) This tag is of the man/machine-readable type employing a minimum of 4 and a maximum of 10 digits. The purpose of the tag will be to provide direct coding to a number of individual and future system destinations as follows:

a.) Any outbound make up device

3.) The bar code is printed in an orthogonal pattern with 40 mil bars in an Interleaved 2 of 5 formats.

4.) Tag stock and bar code print quality are to conform to ATA/IATA standards.

5.) In the event that a different number of characters are used for the tag (compared to the standard IATA sortation tag), ensure that the scanner system is capable of differentiating between the two types of tags. Also ensure that no possibility exists for a scanner to misinterpret, for example, a partial scan of a 10-digit code as a valid scan of a fallback code. Provide the sort table with the capability for the entry of ten (10) special function tags and their destinations.

M. Baggage Source Message (BSM) Data and Format

1. General

a. The BSM is a computer-to-computer message designed to provide information for processing of baggage by automated baggage systems.

b. The City of El Paso shall generate a Baggage Source Message (BSM) in accordance with the latest version of IATA Recommended Practice 1745. The messages are sent, received and processed those systems in order to achieve automated baggage sortation, passenger and baggage reconciliation, and

other baggage services.

c. Baggage information included in these messages is linked with the unique 10-digit bag tag number defined as the License Plate (refer to IATA Resolution 740).

d. Obtain a copy of the latest versions of the IATA Recommended Practice 1745 and IATA Resolution 740 and conform to the format requirements contained within.

e. The BSM will normally be sent as a result of a check-in transaction, which may be local, on-line through check-in or on receipt of an Edifact (interline) through check-in message.

2. Type:

a. Version 1

1.) Within each message section, elements and data items are shown as either mandatory, conditional, optional or not used.

a.) Mandatory (M) – shall be included in the message

b.) Conditional (C) – shall be included in the message if specified conditions are met

c.) Optional (0) - may be included at the discretion of the City of El Paso. Coordinate with the City of El Paso for the Optional Elements

d.) Not Used (N) – data item shall not be used

3. Standard Message Handling

a. The sortation system must be able to receive and react to all standard messages. Examples are BTM; BSM; BPM; BNS; BUM and BPM. The system shall have the ability to process BSMCHG and BSMDEL messages.

4. Applicable BSM Data

a. All element fields contained within the received BSM shall be retained for sortation and report generation purposes (for present or future City of El Paso requirements).

b. All BSM data elements must be retained in the BSM database. The BSM database shall have the ability to record that a duplicate BSM has been sent e.g. two (2) or more BSMs referencing the same tag number (add/delete excluded).

c. The BSM must be time stamped upon receipt by the BHS sortation computers. The time stamp shall be included in the BSM database.

d. In the case of a queue, the locally generated BSMs shall be processed first.

e. All actions of a bag (identified by the BSM) must be recorded as a Baggage Processing Message (BPM). This shall include, but not be limited to, pushed bag, scanned bag, and arrived bag.

5. BSM Elements

a. The BHS shall look into the dot element to determine the correct sortation for each bag.

b. The system shall have the capability to sort baggage by any of the following BSM elements/fields including those designated as "Optional":

ELEMENT	TITLE	MESSAGE EXAMPLES	BTM	BSM	BPM
	STANDARD MESSAGE IDENTIFIER (SMI)	BTM; BSM; BPM; BUM; BNS; BCM	M	M	M
	SECONDARY LEVEL MESSAGE IDENTIFIER	BAM; FRO; FCM; DBM; LSM	N/A	N/A	N/A

	CHANGE OF STATUS INDICATOR	CHG or DEL	N/A	C	N/A
.A	MESSAGE ACKNOWLEDGEMENT DETAILS	.A/QF006097/BSNVACK or .A/LH3730024/BSM/NAK/FLT DEPARTED	N/A	N/A	N/A
.B	BAGGAGE IRREGULARITIES	.B/OFF0220001123456/	N/A	N/A	C
.C	CORPORATE OR GROUP NAME	.C/SITA TOUR	0	0	0
.D	UNUSED	N/A	N/A	N/A	N/A
.E	BAGGAGE EXCEPTION DATA	.E/RUSH	0	0	0
.F	OUTBOUND FLIGHT INFORMATION	.F/LH127405MAY/JFK/F	M	C	C
.G	UNUSED	N/A	N/A	N/A	N/A
.H	UNUSED	N/A	N/A	N/A	N/A
.J	PROCESSING INFORMATION	.J/R/43S/12OD32/02APR/1545L/B2	N/A	N/A	0
.K	DEFAULT MESSAGE PRINTER	.K/69C626	N/A	0	0
.L	AUTOMATED PNR ADDRESS	.L/QRE7Q6	0	0	0
.M	UNUSED	N/A	N/A	N/A	N/A
.N	BAGGAGE TAG DETAILS	.N/0001123456002	M	M	C
.O	ONWARD FLIGHT INFORMATION	.O/UA423/02APR/DEN/F	C	C	0
.P	PASSENGER NAME	.P/ISMITH/HM	M	0	0
.Q	LOAD SEQUENCE NUMBER	.Q/023	N/A	N/A	C
.R	INTERNAL AIRLINE DATA	.R/FREE TEXT	0	0	0
.S	RECONCILIATION DATA	.S/Y/23A/C/234/333/Y	N/A	C	0
.T	BAGGAGE TAG PRINTER ID	.T/221322	N/A	0	N/A
.U	LOADING DATA	.U/AVE12345NE/11R/T/Y/NRT/Y/ .N/009/04MAR/SEL	N/A	N/A	0
.V	VERSION AND SUPPLEMENTARY DATA	.V/ITYYZ/PARTI/1234567890/A	M	M	M
.W	PIECES AND WEIGHT DATA	.W/K/2/38/8 or W/L/2/84/16 or .W/P/3	0	0	N/A
.X	BAGGAGE SECURITY SCREENING	.X/LEVELI; X/HANDSEARCH; .X/XRAY	0	0	0
.Y	FREQUENT TRAVELLER NUMBER	.Y/BXJ2238	0	0	0
.Z	UNUSED	N/A	N/A	N/A	N/A
	END OF MESSAGE IDENTIFIER.	ENDBTM; ENDBSM; ENDBTM	M	M	M

6. BSM Retention

   a. The BSM data shall be retained until such time that the possibility of a duplicate bag tag number is minimized. The retention time shall be configurable by the System Manager, default set to 72 hours. After this period BSMs shall be retained in a historical database for a period of 30 days, operations and maintenance personnel shall have access to the historical data for customer baggage reconciliation.

   b. The System Manager responsible for baggage operations shall control manual or automated deletion of the BSM message. The system shall provide flexible controls such as deletion of BSMs based on their age in hours within the BSM database or the check in location.

7. Quality Control Displays

   a. The City of El Paso shall also be able to monitor at the MDS the BSM database as follows:

      1.) Distribution of check-in time with date.

      2.) Receipt of the BSM by the sort computer with time and date.

      3.) Frequency of duplicate BSMs, with breakdown by originating station.

8. "Dot Element" Additional Requirements

   a. The following descriptions of "dot element" BSM information are listed below. However, with the consideration that further improvements or modifications may be implemented, this should not be construed as an all-inclusive list of parameters.

      1.) . S, .F (Standby Passenger Information)

         a.) The sortation computer must have the ability to translate the information within the .S and .F fields to determine if the bag is for a standby passenger. The system must also be capable of sorting all standby passenger bags to a specific sortation pier (to be assigned at any workstation). All workstations must include the ability to view an overall summary and specific details about these bags, as well as print out the summary. Sortation of standby passenger baggage shall be by flight with the ability to assign each flight to a separate pier. A report shall indicate the amount of standby bags for each flight and the pier to which they were sorted.

      2.) . X (Baggage Security Screening Information)

         a.) The sortation computer must have the ability to translate the information within the .X field and verify the contents to determine if the bag requires additional security screening. The system must also be capable of sorting all security-screening bags to a specific sortation pier (to be assigned at any workstation). The system shall check the data immediately following the .X field. If the system sees .X/SEL then the system shall route the bag to the security pier (if defined). If the system sees any other information following the .X field, the bag shall not be routed to the security pier. The BPM message shall not be changed as a result of the modification. All workstations must include the ability to view an overall summary and specific details about these bags, as well as print out the summary. The BHS system must not base sortation upon whether or not the .X field is populated, but rather make decisions based upon information held within the .X field message. This programming shall effect the system decisions if/when the bag is re-read at scanner arrays (if applicable) or manual encoding stations based upon whether or not it needs to be sent through a secondary screening device and whether or not it has already been sent through a secondary screening device. Ensure that all bags assigned to a secondary screening process are sorted to the correct screening destination, and following the screening that all bags are sorted to their final destination.

      3.) . O (Outbound Flight Information for Down line Destinations – "Through-Flight" Logic)

         a.) The sortation computer must have the ability to translate the information within the .F field to

determine the down line destination information and provide the ability to sort within defined parameters (assigned by the City of El Paso or its representative) set at the workstations.

(1.) International Baggage Sortation

(a.) A bag is considered a "Through-Bag" if there is no .O element and the city identified in the .F element is not the first city in the Active Flight Schedule's list of destination cities. If there is a "Through-Pier" defined for the flight, then the thru bag is routed to the "Through-Pier," otherwise the "Through-Bag" is routed to the destination city pier. All bags subject to sector sorting rules shall revert to their sector assignment destinations if the .O field is not populated. If there is a .O and the flight is a Insert Carrier flight, sort to the sector 1 pier. If there is a .O and the flight is a non-Insert Carrier flight, sort to the sector 8 pier. If any of these piers are unassigned, the bag shall be routed to the primary pier.

(2.) Domestic Baggage Sortation

(a.) To sort to a sector on board an aircraft a bag's BSM message must specify a non-zero sector number. This will happen when the BSM includes a .O with an associated .R field for "onward" flight information for a bag that is carried across several segments of a flight's itinerary. If a bag is assigned to sector 1, the bag is routed to the flight's sector 1 pier. If that pier is unassigned, then the bag is routed to the flight's primary sort pier. If a bag is assigned to sector 2, the bag is routed to the flight's sector 2 pier. If that pier is unassigned, then the bag is routed to the flight's primary sort pier. If a bag is assigned to sector 3, the bag is routed to the flight's sector 3 pier. If that pier is unassigned, then the bag is routed to the flight's sector 2 sort pier. If a bag is assigned to sector 4, the bag is routed to the flight's sector 4 piers. If that pier is unassigned, then the bag is routed to the flight's sector 1 sort pier. If a bag is assigned to sector 5, the bag is routed to the flight's sector 5 piers. If that pier is unassigned, then the bag is routed to the flight's primary sort pier. If a bag is assigned to sector 8, the bag is routed to the flight's sector 8 piers. If that pier is unassigned, then the bag is routed to the flight's sector 5-sort pier. If a bag is assigned to sector 9, the bag is routed to the flight's sector 9 piers. If that pier is unassigned, then the bag is routed to the flight's sector 1 sort pier. If there is no sector number assigned and the .F field of the BSM has a class of travel of first class then the bag is routed to the flight's First Class Pier. If that pier is unassigned, then the bag is routed to the flight's primary pier. If there is no sector number assigned and the .F field of the BSM has a class of travel of Business Class then the bag is routed to the flight's Business Class Pier. If that pier is unassigned, then the bag is routed to the flight's Primary Pier.

(3.) All workstations must include the ability to view an overall summary and specific details about these bags, as well as print out the summary.

N. Network

1. General

a. The BHS high-level and low-level data communication networks specifications and requirements as mentioned in this specification are written based on the best hardware, software and network concepts/designs that are available in the market today. Install the latest and best hardware, software and network concepts/designs that are available in the market at the point of installation.

b. Submit the following information with regards to the network design issues at the point of bidding to the or its representative:

1.) Performance of the network

2.) Security: No single point of failure

3.) All the protocols to be used

4.) Quality of service in terms of bandwidth management

5.) Installation and site management

6.) Evolution of the network devices

7.) Knowledge transfer

8.) Network architecture and design

2. High Level Network Coordinate network requirements with client; request if any specific components shall be used from client

a. The BHS high-level network is a critical component that powers the information and application infrastructure. Therefore, it shall be designed to be fully resilient with high requirement for good network and information security.

b. The BHS high-level network shall be designed to have good security, high performance, fully fault tolerant and compliant to open standards. The security measure shall address security at the port level, network equipment protection, network access protection through a combination of Virtual Private Network and Firewall, access to mission critical application and authentication mechanism used by mission critical applications. The performance and resiliency of the network design shall provide a completely reliable network where equipment or physical links failure should not cause or disrupt the availability of the network. It is also mandatory for the network to be based on open standards that are established, as this will ensure that the network is always able to accommodate newer equipment with superior performance when available. In addition, the use of IP addresses on the networks shall be well managed.

c. Protection against virus and trojan programs is extremely crucial to ensure minimal disruptions. Hence, there shall be anti-virus and content checking protection for all entry and exit points on the network. These security protections shall be installed at every interface that links to the network and also protect points of entry and exit for all LANs that hosts critical applications. Submit details of the virus protection program (i.e. manufacturer) to the City of El Paso or its representative for approval.

d. The network shall also be a fully resilient network and every measure shall be taken to ensure that the network availability is at its highest possible. In order to accomplish this provision of multiple source of electrical power supply, unlimited power protection, multiple routing of network cables inclusive of optical fiber, high availability network equipment and intelligent use of load balancing hardware shall be necessary.

e. The main network equipment for the network backbone shall have no single point of failure. There shall at least be two (2) network switches for the network backbone. There shall be multiple links between the network switches in a manner that failure in one (1) network link shall not disrupt the entire network backbone. In addition, each link shall use link aggregation technology, which is also known as port trunking. Through link aggregation, multiple physical links shall be grouped to work, as one (1) logical link and loss of a physical link shall not disrupt the logical link.

f. The optic fiber cables that form the main backbone shall not have the same cable-laying route and shall be routed a minimum distance of 15 feet apart from one another. This shall ensure that in the event of cable mishap all optic fiber cables that form the backbone will not be lost.

g. All network cabling (UTP and fiber optic) shall be carried in conduits and none shall be laid in an unprotected manner. This shall ensure that pests do not attack unprotected network cables.

h. All network cables should be clearly marked for easy connection tracing.

i. Network Switches

1.) The network switches for the backbone shall have the following features:

a.) Good use of high performance Application Specific Integrated Circuits (ASIC) chips for high performance switching and routing

b.) There shall be no single point of failure in the hardware design of the network switch

c.) The network switch shall have a chassis that accommodate multiple slots

d.) There shall be a hot standby for the Supervisory modules in the network switch

e.) All modules and power supply shall be hot pluggable

f.) No degradation of performance when gathering switching statistics

j. Workstations and PLC ports shall belong to all LANs to communicate to all application servers.

3. Low Level Network Verify if existing shall be matched; client to indicate preferred network

a. For the BHS low-level network use a Data Communications Highway (DCH) (or approved equivalent) as an industrial network to link together distinct, remote stations. Each station may consist of a programmable controller (PLC), a computer, or an intelligent RS-232-C device (interface module). The DCH shall provide high-speed communication and fast data acquisition. It shall be of rugged construction and well suited to a bagroom environment.

b. The central trunkline of the Data Communications Highway shall consist of adequate cabling capable of high-speed inter-communication between up to 200 devices via interface modules. The central trunkline shall have the capability of being up to 15,000' long, with the remote stations being as far as 100' away from the trunkline. The network shall display a high degree of noise immunity and rejection from electromagnetic and radio frequency interference (EMI/RFI).

c. The DCH shall utilize a time-sharing method of communication control, thus eliminating the possibility of any one-interface module from dominating the network. The DCH shall allow for inter-communication of many types of ASCII devices, including, but not limited to:

1.) PLCs

2.) Maintenance Terminals

3.) Display Monitors

4.) Computers

5.) Printers

6.) Hand Held Bar Code Laser Scanner Guns

7.) Fixed Bar Code ATR Scanner Arrays

d. For the communication use a synchronous data stream from one interface module to another or to the primary baggage system computer, and provide data transfer, message acknowledgments, and error recovery. The data shall refer to ladder rungs; register data, I/O status, and other information.

e. Provide RS-232 D-shell connectors with captive retaining screws, “D” concentric twist-lock twin-axial connectors, or approved equipment. In any case, ensure that they provide easy connection to control and interfacing devices, and display a high degree of noise immunity and rejection from EMI/RFI.

f. Ensure that expansion may be accomplished by interface module-to-interface module linking with no limit.

g. Use standard protocols with error recovery on all DCH transmissions for error checking.

h. Place source/destination message routes in the command for each device wishing to communicate.

i. Provide repeaters as required along the length of the communications highway to boost signal strength.

j. Provide data ports at strategic points on the communications highway to allow for system monitoring by

personal computers.

k. At a minimum, configure the DCH as a ring or provide redundant trunkline to ensure a single break in the trunkline does not render the system inoperable.

l. Network Architecture

1.) ControlNet (or approved equivalent) may be installed as an industrial network to link together and provide high-speed communications between distinct remote components of the (outbound) BHS. The network must be capable of a minimum scan time of 5 ms and be capable of receiving, processing, and transmitting information within 50 ms or as required to facilitate baggage tracking. The network must be capable of operating in a warm backup configuration without any degraded functionality. The cables that form the main backbone shall not have the same cable-laying route and shall be routed a minimum distance of 15 feet apart from one another. This shall ensure that in the event of cable mishap involving a single cable the backbone will not be lost

2.) A communications bridge (for example ControlLogix Gateway (or equal)) must be incorporated to provide interfacing between distinct communication interface modules. This bridge must be capable of providing a link between the High Level network (BHS computers, City of El Paso reservation system, Data Communication Highway, and the BHS control network (PLCs).

3.) The network communication speed must not be less than 5 M bits/sec. The network architecture should be designed to optimize data transfer between network devices to fulfill the required time constraints.

4.) At a minimum, shielded cable shall be used as the physical media to connect components of the network. Cable must be capable of normal use in high noise environments. NEMA approved cable taps, connectors, and adapters suitable for use in a bagroom environment must be used. Fiber optic cable should be used wherever possible.

5.) Particular attention must be given to voltage across network components. Refer to manufacturer's literature for exact range of voltage potential.

6.) Appropriate power supply ratings must be considered and applied for network components.

7.) Repeaters must be used as recommended by the manufacturer to maintain network communication speed and reliability.

8.) The network architecture must be designed to operate in conjunction with multiple processors. A minimum of 99 addressable nodes must be available for communication. Communication with essential components shall be prioritized and used for reporting. The overall allowable length of the network cabling and remote components must be at least 15,000 feet.

9.) An Allen Bradley redundant ControlNet system (or equivalent as approved by the City of El Paso or its representative) must be utilized.

10.) Network switch must be the City of El Paso approved Cisco switch Verify Cisco is acceptable to City of El Paso or indicate City of El Paso's preference.

11.) No more than 32 I/O points may be assigned to each I/O module.

O. Maintenance Diagnostic System (MDS)

1. Provide a centralized diagnostic system for use by trained operations and maintenance employees to accomplish the following:

a. Display and locate any system malfunction or failure through text or graphic simulation of the entire system and text display.

b. Visually monitor the sortation system operational configuration, including conveyor flow direction, operational status (On/Off/E-Stop/Overload) and operating mode (such as but not limited to cascade and indexing).

c. Isolate location and cause of equipment failures.

d. Display status of fire/security doors (such as but not limited to open, closed, or malfunctioning).

e. The MDS system designed and installed shall be such, that the City of El Paso's maintenance personnel can easily modify/add subsystems, display faults, and modify/add reports in the event that additional/modified subsystems are installed as part of any future project.

2. Use the BHS Computer System to run this application.

3. The diagnostic monitors shall identify the following conditions (this listing is not to be construed as being all inclusive):

a. Emergency Stop Actuated (identify location)

b. Motor Overload Tripped (identify location)

c. Excessive actuation time of a conveyor sensor (other than in a normal queue/accumulation condition) to identify a probable jam condition or similar operational problem (identify location).

d. Photocell failure (identify location)

e. HSPD not in home position (identify location)

f. Vertical Sort Conveyor in fault condition (identify location)

g. System configuration (Mode Of Operation)

h. Operational status

i. Failure of tracking encoder/pulse generator

j. Over Temperature Warning for any computer or PLC cabinets

k. Fire Alarm System Faults (if the BHS is tied to the fire system for local code compliance)

l. PLC Failure (identify location)

4. System Graphic Screens

a. The workstation shall have a minimum of two (2) 22" system graphic monitors or more as required that shall accurately and clearly depict the entire BHS.

b. The graphics screen shall display, in near real time, dynamic pictorial format, the operational status of individual conveyors and sort devices that are connected to the sortation control system and system programmable logic controllers. Framed icons and specific conveyor I.D.s representing the conveyor sections shall change color according to the following scheme. This shall immediately highlight problem areas so that the problems that arise may be corrected in the minimum amount of time.

Condition	**Color**
Fire Alarm	Red Blink
Motor Overload	Blue
VFD Fault	Blue
Shaft Encoder Fault	Orange
Jam	Yellow
Missing Bag Jam	Yellow
Over-length/Over-height	Flashing White
EDS Device Failure	Yellow Blink
BHS/EDS Fault	Yellow Blink

HSD Failed to Retract/Extend	Yellow
HSD Prox. Failure	Yellow
HSD Faulted	Yellow
Door Failed to Open	Yellow Blink
Door Failed to Close	Yellow Blink
Obstruction or Door Fault	Yellow Blink
E-Stopped	Red
Cascade Stopped	Magenta
Out of Service	Brown
Communications Loss (Individual Components)	Red
I/O Fault	Brown
Disconnect Off	Brown
Maintenance/Manual Mode	Brown
HSD Disabled by Operator or PLC	Brown
HSD Route All Mode by Operator or PLC	Brown Blink
Door Disconnect Off	Yellow Blink
Oddsize Conveyor Full	White
Conveyor Full	White
Normal Running Mode	Green
Oddsize Running Mode – Forward or Reverse	Green with Arrow indicating direction of travel
Door in Up Position	Green
Door in Down Position	Black
Auto-Stop	Black
Idle	Background Blue

c. Graphics Manipulation

1.) The system operator shall have the capability to zoom in on any portion of the BHS on any of the two graphics monitors.

2.) Each portion of the BHS, split between the two screens, shall have predefined sectors for the purposes of the dynamic zoom function. Once selected, the individual conveyor shall be displayed in greater detail, with all functionality as described previously, such as color depiction of conveyor status. In addition, textual descriptions of all related status shall be displayed (i.e., motor disconnect on/off, motor starter normal/overload, conveyor running/E-stopped/ cascaded/jammed/ timed out).

3.) In the zoom steps, the overall system normally displayed on that associated graphics monitor shall be shown on a reduced scale in the corner of the screen with the zoomed sector shaded for reference. This reduced display shall disappear upon return to the overall system display.

4.) A single keystroke or mouse click shall return the operator to the previous zoom display.

5.) Should one graphics monitor fail, the second shall display the entire system with all zoom functionality as described above by means of an operator initiated command on the textual operator interface monitor.

d. Text Monitoring

1.) It shall be possible to configure the MDS application at the BHS workstations to provide system status in text format.

2.) In a manner similar to the graphic screens, the text format shall use dynamic text to represent conveyor sections status. The fields next to the conveyor I.D.s noted above change color and value according to the following scheme:

Condition	**Color**	**Text Displayed**
Fire Alarm	Red Blink	FIRE
Motor Overload	Blue	MSP OFF/TRIPPED
VFD Fault	Blue	VFD FAULT
VFD Fault, EDS Infeed	Blue	IN VFD FAIL
VFD Fault, EDS Outfeed	Blue	OUT VFD FAIL
Shaft Encoder Out of Limits - High	Orange	SE HIGH
Shaft Encoder Out of Limits - Low	Orange	SE LOW
Shaft Encoder Fault	Orange	SE FAIL
Jam	Yellow	JAM
Missing Bag Jam	Yellow	MISSING BAG
HSD Failed to Retract	Yellow	FAIL TO RET
HSD Failed at Home	Yellow	FAIL AT HOME
HSD Failed to Extended	Yellow	FAIL TO EXT
HSD Prox. Failure	Yellow	PROX FAIL
HSD Position Fault	Brown	HSD POS FAULT
Over-length/Over-height	Flashing White	OVERLENGTH/OVERHI GHT
EDS Device Communication Failure	Yellow Blink	COMM FAILURE
EDS Too Many Errored Bags	Yellow Blink	ERRORED BAGS
EDS Not Ready	Yellow Blink	NOT READY
EDS Process Time Exceeded	Yellow Blink	PROCESS TIME
Door Failed to Open	Yellow Blink	FAIL TO OPEN
Door Failed to Close	Yellow Blink	FAIL TO CLS
Obstruction or Door Fault	Yellow Blink	DOOR FAIL
E-Stopped	Red	E-STOPPED
Safety Limit Switch Tripped	Red	SAFETY LS
Cascade Stopped	Magenta	CASCADE
Communications Loss (Individual Components)	Red	COMM FAILURE
I/O Fault	Brown	OFFLINE
Disconnect Off	Brown	DISC OFF
Out of Service	Brown	OUT OF SVC
Maintenance/Manual Mode	Brown	MANUAL
Door in Maintenance/Manual Mode	Brown	DOOR MAINT.

HSD Route All Mode by Operator or PLC	Brown	HSD DIV ALL
HSD Disable by Operator or PLC	Brown	HSD DIV NONE
Door Disconnect Off	Brown	DR DISC OFF
Door in Down Position	Black	DR CLSD
Door in Up Position	Green	DR OPEN
Conveyor Full	White	FULL
Oversize Conveyor Full	White	FULL
Normal Running Mode	Green	RUNNING
Head End Bypass	Green	RUNNING, BYPS.
Oversize Running Mode – Forward or Reverse	Green with Arrow indicating direction of travel	RUNNING FORWARD OR RUNNING REVERSE
Auto-Stop	Black	AUTO STOP
Idle	Background Blue	IDLE

e. Large Screen Graphics Display System

1.) Provide as a minimum, 2 wall mounted "flat screen" video monitors. The minimum recommended size of each screen shall be 55-inch (measured diagonally) and will be adequate to ensure legibility of screen contents from all viewing locations within the control room. The monitors can be either burn-in resistant LCD or Plasma with burn-in protection. The monitors shall display in real time, dynamic pictorial format, the operational status of the conveyors and sort devices for the entire existing Domestic Outbound Baggage Handling Systems (no zoom capability).

2.) It will be possible to display a single graphic image in each screen (4 different images). Provide all hardware, appropriate framing, necessary mounting provisions, software, and cabling necessary for the complete installation of these units, including, where applicable, suitable equipment enclosures.

3.) The actual screen layouts presented by the monitors will be selected by Control Room personnel from any of the workstations, and will be capable of displaying graphic or text images that are selectable and different than those displayed in the Workstation Monitors. It shall also be acceptable to provide a separate controller specifically for the large screen display in lieu of having any of the workstation monitors providing control.

4.) The monitors shall be able to display either full system status screens (equivalent to a "mimic" panel sometimes used in large BHS control rooms), for instance displaying the graphics image from one of the Operator Workstation Monitor graphic displays.

5.) The display quality shall permit easy identification of screen contents from all areas of the Control Room from which viewing is possible, under all conditions of ambient lighting of the Control Room environment.

a.) All screen graphic layouts must be able to be displayed on the monitors.

b.) The images displayed by the Large Screen Display unit shall be computer generated, and therefore a hard-wired "mimic" displays shall not acceptable for this application.

f. Printers

1.) All printed messages shall be date and time stamped. Fault Alarm messages are to provide date and time of occurrence and date and topic of fault clear. Reports are to provide date and time of printing. All times shall be given in military time, e.g., one o'clock in the afternoon shall be printed as 13:00:00.

2.) A high-speed laser printer for each Workstation is required for the printing of reports.

5. Provide the capability to archive all records of statistical data on DVD (CD-ROM or USB Flash Drive is allowable if required by the City of El Paso). Provide means of restoring archived data and view it in the original report format that it was generated in. Operations personnel shall have the ability to retrieve the reports and print them from the redundant hot back-up computer without affecting in any manner any active data or operations.

6. The MDS shall have the capability to render individual subsystems, check-in counter conveyors, and conveyors of the baggage system available or unavailable.

7. The MDS display must have an indicator to notify the operator that the display screens are not locked up.

8. The MDS shall be active for new equipment, as it becomes operational.

9. Diagnostics Reporting

   a. Realistic graphical representations shall be employed to portray the equipment with details up to the actual position of all equipment installed position, metering positions, settings, indication, lamps and alarm messages. Operation shall be accomplished by touch screen commands.

   b. Automatic alarms will come up for the following events:

      1.) Fault of any redundant component

      2.) Fault of a individual conveyor (to distinguish overload and jam conditions)

      3.) Fault of a component of the control and monitoring system

      4.) Fault of a communication line of the control and monitoring system

      5.) Number of faulty conveyors pass the alarm threshold (2 variable thresholds)

      6.) Duplicate or faulty BSM messages

      7.) Bag sent to problem bag output

   c. All alarm filters shall be user definable and easily changed through drag and drop type interface with objects programming.

   d. All alarms shall be logged into the historical database and printed out in the alarm printer. The following events will be written in the log:

      1.) All fault of the BHS (overview and details)

      2.) All faults of the control and monitoring system

      3.) All control commands for the BHS

      4.) Changes of the system configuration

      5.) Changes of an alarm threshold

   e. Alarm Condition

      1.) An alarm condition is defined as the occurrence of a new situation, which requires acknowledgment by the operator. Thus an alarm can be:

         a.) A logged equipment status has changed its status

         b.) An alarm monitoring inhibited point has timed out and returned to normal alarm processing

         c.) Another operator initiated or specified events

   f. Alarm Handling

      1.) The system shall manage the incoming alarms and warnings such that alarm/warning conditions are

reported in a clear, concise and timely manner. The chronology of detection of alarm/warning conditions shall be retained and alarms shall be time stamped.

2.) It shall be possible for an operator to inhibit the alarming or the logging of an alarm condition for an equipment status point. Limit violation alarming shall have dead bands in determining return-to-normal conditions.

3.) It shall be possible to delay the alarming for a process variable for a defined period of time. So it shall be verified that an abnormal condition detected is permanent. The condition must persist for a specified time period.

4.) It shall be possible to automatically show the graphic of a selected alarm by selecting the alarm in the alarm list.

5.) Maximum use of the display generator capabilities shall be made to annunciate alarms by means of color and flashing. A new alarm shall be displayed with a quick flashing in a specified color (0.5 sec duty cycle) as an active alarm; but an acknowledged alarm shall have steady alarm color.

g. Alarm List should contain all active alarms, acknowledged or unacknowledged in chronological order. It is updated automatically when a new alarm appears.

h. Alarm List of Unacknowledged Alarms should contain all unacknowledged alarms, active or already reset in chronological order. It is updated automatically when a new unacknowledged alarm appears.

i. An alarm line containing the latest alarms (between 2 and 4) shall always be visible on the operator workstations. It shall provide the same features as the alarm list.

j. An alarm category shall be a set of options on the processing of alarms, return-to-normal, and information events/messages.

1.) Each alarm, return-to-normal and information event / message issued shall concern a single database item. For each item, the system database shall identify the alarm category for that item.

2.) An alarm category specifies processing for each type of alarm, return-to-normal, informative event / message. The processing options shall include but not to be limited to:

a.) Insert the message text in the chronological history file

b.) Print the message on alarm printer

c.) Acknowledgment required for this message

d.) Generate an information event message on acknowledgment

e.) Sound the audible alarm at operator workstation

3.) Each alarm category shall also specify the conditions under which an alarm or return-to-normal message shall be removed from alarm display lists. The alarm removal options shall include but not to limited to:

a.) Remove the alarm message upon acknowledgment

b.) Remove the alarm message if acknowledged and the point returns to normal

c.) Remove the return-to-normal message when it is acknowledged

4.) It shall be possible to generate group alarms. A group alarm is the linkage of several individual alarms to a common alarm.

k. Alarm Reporting Requirements

1.) The alarm reporting capabilities are to include but are not limited to:

a.) Alarms shall be time stamped and logged into the alarm and event logs in chronological order.

b.) Unacknowledged point alarms and return-to-normal messages shall be presented in the alarm section of the operator workstations.

c.) The appropriate alarm fields in the graphic displays shall flash or be clearly marked as an alarm condition whenever they are displayed.

d.) Point alarms and return-to-normal messages shall be added to the relevant latest alarm display lists. If the alarm lists are currently being displayed, they shall be dynamically updated with the alarm message. Colors shall be used to highlight unacknowledged messages.

e.) Point alarms can be defined to sound an audible alarm at the operator workstations.

l. Alarm Acknowledgment

1.) The acknowledgment of either an alarm or return-to-normal message shall perform several functions, including but not limited to:

a.) Acknowledgment shall prevent the alarm message from appearing in the alarm section of the operator workstations.

b.) Acknowledgment shall cause the symbols and messages associated with the alarm to stop flashing or change appearance on all displays on which they appear and on the map panel. They shall continue to appear in an alarm condition by changed color and shape unless the alarm signaled a return-to-normal.

c.) Acknowledgment shall cause the silencing of the audible alarm.

d.) Return-to-normal messages shall be removed (not displayed) from the latest alarm display lists.

e.) All workstations shall show an acknowledged alarm after that alarm is acknowledged from any workstation location.

2.) The acknowledgment of either an alarm or return-to-normal message shall be performed in several ways, including but not limited to:

a.) Sequentially as alarms appear in the alarm section of the operator workstations.

b.) Individually, by selecting then acknowledging the symbol or message for the individual alarm on the appropriate operator display or alarm display list. If more than one alarm is active for the same process variable, then all these alarms shall be acknowledged together.

c.) All alarms shown on a latest alarm display list with a global acknowledgment command.

d.) Individually within the graphic operator displays

m. The graphics screens for every application contain context sensitive on-line help for every function. Both operation and displays are designed for personnel who lack computer training. HTML type help navigation of related topics shall be provided. The operator can call up detailed information from the database by clicking the mouse on the lighting elements in the graphic image or by entering search codes on the keyboard. The detailed information is displayed in list and mask form.

n. The BHS Contractor shall provide a VPN access option to the City of El Paso' IT Department for approval. VPN will allow access from remote locations to preform diagnostics on the application software, check on systems configurations and integrity of database.

o. During a system upset load condition, not more than five (5) seconds shall elapse from the time a status change occurs at a PLC until the change appears on the operator workstation displays.

1.) In order to meet this system update time, it shall be determined all data throughput related designs in the hardware and software such as, but not limited to PLC communications window size, PLC scan frequency, server master and communication processor's throughput, disk performance and display update speed.

2.) Dynamic data on the current operator workstation displays shall be updated within two (2) seconds from receipt of data from the PLCs. The time-of-day field on the operator workstation displays shall be updated at least every second.

3.) Supervisory control outputs at the workstations shall occur within two (2) seconds following the entry by the operator. However such operator entry shall be immediately acknowledged on screen. In the select-before-operate mode of operation, the blinking or other visual indication of the selected control device shall immediately appear on the operator workstation displays. If an operational parameter is changed or adjusted by the operator the change will be registered in all PLCs, computers, workstations and databases.

p. When a request is made by the operator to retrieve a different alphanumeric or graphic operator display or window, the new display shall appear on the operator workstation displays within two (2) seconds including update of 50 dynamic data fields based on the implemented database.

q. The sort computers must correctly follow the calendar date. The date keeping function shall incorporate leap year dates.

r. Hardware reliability information of all major individual hardware for this project, including the Mean Time Between Failures (MTBF) and its standard deviation for all the equipment are required for all this equipment.

P. Maintenance Information System (MIS)

1. Provide the statistical information gathering and report generation capability to display and print certain defined information considered essential to the successful operation of the system.

2. Use the Baggage System Computer System to run this application.

3. Provide six (6) levels of usernames with password protection against unauthorized access to the system:

Level	**User**	**Access**
Level 1	Handling Agent	Ability to view, print and achieve reports regarding passenger and flights handled by the agent logged on
Level 2	Operator	Access to normal operational modes
Level 3	System Engineer	Access to all operational modes
Level 4	System Manager	Access to all operational modes plus ability to change software
Level 5	System Administrator	Access to all operational modes plus ability to change software and assign user names and passwords
Level TSA	TSA Manager	Access to all TSA reports only

4. Provide a standard “Report Generator” to permit compilation of additional statistical reports. Requires Level 4 and 5 protections for use of this function.

5. Use Baggage System Computer terminal(s) (keyboards, monitors, and printers) as input/output devices for the MIS system.

6. Employ a user-friendly Human Machine Interface (HMI) with menu-driven routines to permit access to the system.

7. The type of MIS provided shall have the functionality (be user friendly) to allow the City of El Paso to easily modify/generate/develop Operational and Maintenance reports to meet their own needs.

8. Provide ability to view all reports on screen as well as in printed format or file format (CSV and PDF).

9. Provide ability to save, in buffer storage, and print on a first-in, first-out basis up to 20-flight closeout Reports or end of day reports in the event the printer is busy at any given time.

10. Provide ability to produce daily, hourly, weekly, monthly, quarterly, and annual reports as well as reports based on a user defined interval.
11. Provide a means to reset all non-SSI statistics and counters. This shall be accessible at levels 3, 4 and 5.
12. Provide a means to reset all SSI statistics and counters. This shall be accessible at level TSA.
13. Provide the capability to archive all records of statistical data on DVD-ROM, CD-ROM, or USB Flash Drive is acceptable if required by the City of El Paso).
14. Provide the ability for the sort allocation planning to be accomplished in Gantt chart graphical presentation format.
15. Security sensitive information (SSI) such as the following EDS and ETD performance parameters / items shall only be released to TSA Manager Users (i.e., Level TSA):
    a. Screening Alarm %
    b. Time to Decision
    c. EDS Alarm Rates
    d. OSR Alarm Rates
    e. ETD Alarm Rates
16. Generate the following reports:
    a. **Tag Report:** Printout of all tag numbers during the operational period.
        1.) Present:

TAG REPORT

								Time	*Date*	
Dummy # Cleared	BSM#	Name	Flight#	Airline	Time	Read	Bag Type	MU	Sorted	Late Flt#
0902666789 EDS1	4001512137	Smith, John	145	**	08:00	ATR1	outbound	MU1	MU1	246
0903666790 PTRI-16	4001512138	Johnson, Jane	234	**	10:08	ATR2	outbound	MU2	MU2	356

        2.) This report shall be sortable by:
            a.) Ascending/descending tag numbers
            b.) Ascending/descending flight numbers
            c.) Alphabetical passenger names
        3.) Provide the ability to search the report for any text in any field.
        4.) Print and display the report on demand.
        5.) Show every occurrence of a tag being read.
    b. **EDS ID Report:** (Reference outline of reporting capabilities)
    c. **Sort Correlation Table:** Printout of the entire Flight Record database. **Remove if no Sortation**

1.) Present:

SORT CORRELATION TABLE

AIRLINE	FLIGHT#	DESTINATION	FINAL CLOSE-OUT	DEPARTURE	MU	TIME / DATE DEFAULT MU	DAYS
**	326	DEN	9:05	9:20	MU 01	MU 04	2,3,4
**	430	LAX	11:50	12:05	MU 02	MU 04	1,3,5,7
**	1232	SFO	17:00	17:15	MU 03	MU 04	1,2,3,4,5,6,7

DATE *TIME*

AIRLINE: UAL FLIGHT#: 151 DESTINATION: IAD CLOSE-OUT: 15:10 DEPARTURE: 15:25

Sector 1	Sector 2	Sector 3	Sector 4
MU 01	MU 04	MU 03	MU 02

AIRLINE: UAL FLIGHT#: 153 DESTINATION: LAX CLOSE-OUT: 14:10 DEPARTURE: 14:25

Sector 1	Sector 2	Sector 3	Sector 4
MU 01	MU 04	MU 03	MU 02

2.) This report shall be sortable by:

a.) Ascending/descending flight numbers

b.) Ascending/descending destinations

c.) Ascending/descending close-out time

d.) Ascending/descending departure time

e.) Ascending/descending pier/make-up units

3.) Provide the ability to search the report for any text in any field.

4.) Print and display the report on demand.

5.) Provide Level 3, 4 and 5 protection for use of these functions:

a.) Disregard a single flight or all flight close-out times

b.) Disregard a single flight or all flight departure times

Note: Any flight(s) disregarded will be noted in this report.

d. **Immediate Equipment Malfunction and Correction Report**: Automatic printout upon detection of each equipment malfunction and each subsequent correction.

1.) Present: (upon detection of equipment)

IMMEDIATE EQUIPMENT MALFUNCTION REPORT

Time Date

DEVICE	MALFUNCTION DESCRIPTION	TIMESET
DV1-3	Diverter Jam	08:45

2.) Present: (upon correction of malfunction)

IMMEDIATE EQUIPMENT CORRECTION REPORT

Time Date

DEVICE	CORRECTION DESCRIPTION	TIMESET	TIME CLEAR	DIFFERENCE
DV1-3	jam cleared	08:45	08:50	00:05

3.) This report is required for the following equipment failures: **Edit for faults**

a.) I/O Fault

b.) DCH Failure

c.) Motor Failure

d.) Photo eye Jam

e.) Tachometer Failure

f.) MCP or Field Device Failure

g.) Door Fault

h.) E-Stop

i.) Diverter Failure

j.) Over length

k.) Overheight

l.) BHS Unknown bag

m.) ATR Laser Array Failure

n.) EDS Unknown bag

o.) Motor Overload

p.) EDS Device Failure

q.) PLC failure

r.) Computer to computer communication lines not linked

s.) Host computer communication lines not linked

4.) Print and display upon detection and correction of the malfunction.

e. **Equipment Operational Summary**: Printout, by subsystem, of photocell, and sorter statistics and summary of individual device malfunctions printed in Equipment Malfunction and Correction Report.

1.) Present: Edit for device types

EQUIPMENT OPERATIONAL SUMMARY

SYSTEM OPERATION ELAPSED TIME *TIME* *DATE*

TRACKING

PHOTOCELL	BHS UNKNOWN BAGS	EDS UNKNOWN BAGS	JAMS
PE/RC1-1	5	1	0
PE/RC1-2	2	0	0
PE/RC1-4	4	2	1

JAM PHOTOCELL	JAMS
PE/TC1-1	5
PE/TC1-2	2
PE/TC1-4	4

DIVERTER	EXTENDED	HOME
DVT –01	4	5
DVT-02	2	1

2.) Print and display the report on demand.

f. **Computer and PLC Status Report**: Print out of which computer is on-line/offline and the computer status as well as which PLC is online/offline and the PLC status

1.) Present:

COMPUTER AND PLC STATUS REPORT

TIME
DATE

COMPUTER	ONLINE/OFFLINE	STATUS
Workstation A	Online	Running
Workstation B	Offline	Standby

SORT CONTROLLER	ONLINE/OFFLINE	STATUS
CC1	Online	Running
CC2	Offline	Standby

PLC BANK	ONLINE/OFFLINE	STATUS
PLC-1A	Online	Running
PLC-1B	Offline	Running

UPS STATUS	UPS CHARGE PERCENTAGE	STATUS	RUN TIME REMAINING (If Battery Powered)
Line Power (or UPS Power)	100%	Good	2:00

INDIVIDUAL PLC STATUS REPORT

REPORT TYPE:	Online/Offline PLC
PLC NAME:	PLC-001A
SOFTWARE TYPE:	XXX
SOFTWARE REVISION:	XXX

PLC STATUS REGISTERS:

Key position:	Run/program/remote
Status:	Running/Online/Offline/Fault/Available

LED STATUS:

Processor:	Ok
Force:	Off
Communication:	Ok
Battery Power:	Ok

MEMORY SIZE:	xxx,xxx
MEMORY USED:	xxx,xxx
MEMORY COMPILED:	xxx,xxx
RUNG COUNT:	xxx,xxx
SCAN TIME:	xx ms

FAULT ERROR CODE:

Processor Error	0
Network Error	0

2.) This report will be dynamically retrieved from the PLC Data tables.

a.) Print and display the report on demand.

g. **Equipment Malfunction Summary**: Printout, by subsystem, of a summary of the Equipment malfunction and Correction Reports.

1.) Present: Edit for fault types

EQUIPMENT MALFUNCTION SUMMARY

TIMEDATE

EQUIPMENT	OCCURRENCES	FAULT DURATION
I/O Fault	0	00:00
DCH Failure	0	00:00
Motor Failure	0	00:00
Photoeye Jam	12	00:22
Tachometer Failure	3	00:10
MCP/Field Device Failure	0	00:00
Door Fault	0	00:00
E-Stop	5	01:10
Diverter Failure	1	00:04
Overlength	0	00:00
Overheight	0	00:00
Conveyor Full	3	00:33
BHS Unknow bag jam	3	00:11
Laser Array Failure	0	00:00
BHS Unknown bag	25	-
Motor Overload	0	00:00
MU failure	0	00:00
PLC failure	0	00:00
EDS Device Failure	4	45:00
EDS Device Communications Failure	1	05:00
Computer to computer communication lines not linked	0	00:00
Host computer communication lines not linked	0	00:00

2.) Print and display the report on demand.

h. **Load Balancing Report**: Printout of individual subsystem loading for the operational period. Time interval for current throughput figures is selectable from 1 minute to 24 hours.

1.) Present

LOAD BALANCING REPORT

REPORT TIME INTERVAL SELECTED *TIME*

DATE

TYPE	SUBSYSTEM	TOTAL BAGS	CURRENT INTERVAL LOAD
MAKE-UP	MU1	56	6
	MU2	78	11
LOAD	CS1	92	14
	TC1	180	43

	Loop	Number of Bags	Number Cleared	Number	Alarmed
Percentage Cleared					
EDS MATRIX	EDS1	210	180	30	86%
	EDS2	240	205	35	85%
EDS DEVICES	ED1	56	47	9	84%
	ED2	42	36	6	86%
	ED3	81	63	18	78%

2.) Print and display the report on demand.

3.) Load balancing report will report for at a minimum the following conveyors:

a.) Ticket Counters

b.) Curbside inputs

c.) All input conveyors

d.) lines in the sort matrix

e.) EDS Devices in the EDS Matrix

i. **Automatic Tag Reader (ATR)**: Printout of all laser array head statistics.

1.) Present: Remove if no ATRs; revise for required quantity of ATR heads

ATR REPORT

ATR NUMBER: ML1 *TIME*

DATE

HEAD1	HEAD2	HEAD3	HEAD4	HEAD5	HEAD6	HEAD7	HEAD8

BAGS READ:	19	119	110	142	199	20	10	11
% READ of TOTAL	15%	35%	45%	45%	35%	15%	30%	30%

OVERALL STATISTICS

BAGS SEEN:	675
BAGS READ:	630
NO READS:	45
VALID TAGS:	625
CONFLICT TAGS:	3
NO MATCHING BSM:	2
READ RATE:	**93%**

2.) For each ATR array, include a Laser Diagnostics Reports shall at a minimum include the following reports and graphs. These reports shall be selectable to hourly and daily data. The reports shall show the performance of the overall Laser Array as well as the performance of each laser head. These reports will display selectable hourly information for at least the past seven (7) days:

a.) Scan Angle: This report will display where the tags are located in respect to the scan line.

b.) Unit Lengths: This report will display the lengths in inches of the product being scanned.

c.) Unit Separation: This report shall display accumulative quantity separation inches of the product being scanned.

d.) Label Position: This report will display the position of the labels in inches with respect to the leading edge of product being scanned.

e.) Label Types: The report will display the quantity of IATA 10 digit codes, fallback tag codes in respect to total quantity.

f.) Label Percent: This report will display the percentage of the labels being 10 digits, fallback codes in respect to total labels read. This report will ID the number of bags with multi codes.

3.) Print and display the report on demand..

j. **EDS Report**: Print out of which EDS machine (by EDS Serial Number and EDS Conveyor ID) is on-line/offline and the machine status:

1.) Present:

EDS MACHINE STATUS REPORT *TIME / DATE*

EDS MACHINE	COMMUNICATION SIGNAL
EDS Machine – EDS1	RTR - High
EDS Machine – EDS2	RTR - Low

PLC BANK	ONLINE/OFFLINE	STATUS

PLC-1A	Online	Running
PLC-1B	Offline	Running

INDIVIDUAL EDS DEVICE STATUS REPORT

EDS NAME: EDS Machine Serial Number– EDS1

SOFTWARE TYPE: XXX

SOFTWARE REVISION: XXX

EDS STATUS REGISTERS:

Run position: Normal/Test

Status: Running/Online/Offline/Fault/Available/E-Stop/Warm-Up

PLC Scan Time: xx ms (PLC xxx)

EDS AVAILABILITY AND COUNTS:

E-Stop 0 hours 12 minutes 38 seconds

Faults: 0 hours 46 minutes 12 seconds

RTR High: 8 hours 30 minutes 0 seconds

RTR Low: 5 hours 30 minutes 0 seconds

Jams: 3

Total Bags Screened: 717

Total Clear Bags: 589

Total Alarmed Bags: 125

Total EDS Unknown Bags: 3

Total OOG Bags: 12

Total In Tracking Bags: 714

Total BHS Unknown Bags: 3

Percentage BHS Unknown Bags: 0.4%

EDS Decision Timeouts: 0

Average Level 2 Decision Time: 18.28 seconds

Average Bag Processing Time: 39.05 seconds

2.) This report will be dynamically retrieved from the PLC Data tables and EDS interface.

a.) Print and display the report on demand.

b.) All EDS availability shall be cumulative for the selected time period.

c.) Jam and lost in tracking counts shall include only jams and bags lost in tracking that involve EDS conveyors.

k. **Day End Report**: Printout of through puts, laser stats, manual encoding stats and outputs. Automatically printed at the end of the operation period. Also provide a means to print report on demand

or at selectable intervals. **Edit fields for applicable devices**

1.) Present

DAY END REPORT

TIME
DATE

THROUGHPUT:

INPUT	BAGS
TC1	915
TC2	1002
TOTAL	**1917**

ATR LASER STATS:

ARRAY	BAGS READ	LATE BAGS	BAGS SEEN	READ RATE%
SF1	95	2	100	90
TOTAL	**95**	**2**	**100**	**90%**

EDS DEVICE SECURITY SYSTEM STATS:

DEVICE	BAGS	BAGS CLEARED	BAGS ALARMED	PERCENTAGE CLEARED
ED1/EDS Serial Number	150	130	20	86%
ED2/EDS Serial Number	323	300	23	93%
SF1 (Level 3)	20	20	0	100%
SF2 (Level 3)	23	21	1	96%

OUTPUTS:

MAKE-UP UNIT	BAGS
MU1	25
MU2	20
TOTAL	**45**

TRACKING:

LINE	NUMBER OF BAGS	NUMBER LOST TRACKING.	TRACKING PERCENTAGE (MIN 99%)
ML1	5180	25	**99.5%**
ML2	10250	40	**99.6%**
EDS1 Loop	4920	56	**98.8%**
EDS2 Loop	9125	80	**99.1%**

2.) Print and display the report on demand.

l. **Sort Area Assignment Report**: Printout of system operational summary. Automatically printed at the end of the operation period. Also provide a means to print report on demand or at selectable intervals.

1.) Present: Remove if no sortation

SORT AREA ASSIGNMENT REPORT

TIME *DATE*

PHYSICAL MAKE-UP	ASSIGNED TO	
MU1	MU1	
MU2	MU2	
MU3	MU3	
MU4	MU3	<Reassigned>

2.) Print and display the report on demand.

m. **Flight Summary Report**: Printout of Flight Summary Report as reported by the scanner array.

1.) Present: Remove if no ATR reader

FLIGHT SUMMARY REPORT

TIME
DATE

FLIGHT NUMBER	AIRLINE	NUMBER OF BAGS	BAG TYPE	BAGS ON TIME	BAGS LATE
0123	**	101	X	99	2
1941	**	158	O	145	13
2078	**	243	O	240	3
0760	**	125	O	124	1

2.) Automatically printed at the end of the operation period. Also provide a means to print report on demand or at selectable intervals.

n. **Individual Flight Summary Report** Printout of Individual Flight Summary Report as reported by the sort pier. **Remove if no method to read bag tags**

1.) Present:

INDIVIDUAL FLIGHT SUMMARY REPORT

FLIGHT #	AIRLINE	CLOSE OUT TIME *TIME DATE*	NUMBER OF BAGS SORTED	BAGS ON TIME	BAGS STILL IN SYSTEM	BAGS LATE
0123	xx	10:20	101	99	42	0

BAG DETAILS

BSM#	PAX NAME	TIME BSM RECEIVED	TIME READ ATR	TIME SORTED
4001512137	Smith, David	09:12:27	09:15:35	09:16:20
4001512138	Smith, David	09:13:02	09:20:45	09:21:10
4001512140	Johnson, Cathy	09:13:40	09:21:28	09:22:37

2.) Automatically printed at the end of the operation period. Also provide a means to print report on demand or at selectable intervals.

3.) This report shall be sortable by:

a.) Ascending/descending tag numbers

b.) Ascending/descending sort time

c.) Alphabetical passenger names

o. **BAG Tag Not Found Report**: Printout of all bag tags read with no destination shall be displayed in this report. **Remove if no method of reading bag tags**

1.) Present:

BAG TAG NOT FOUND REPORT

CARRIER ID	TAG NUMBER *DATE* NOT FOUND	TIME SEEN	LOCATION SEEN	PAX NAME	FLT #
**	3006457841	09:15	XX Laser Array	Smith, John	UA123
**	3001324972	10:26	XX Laser Array	Smith, Jane	DL345
**	3007821198	11:24	XX Laser Array	Johnson, Janet	NW57
**	3004687236	13:56	XX ME	Irvin, Michael	UA987

2.) This report shall be sortable by:

a.) Ascending/descending tag numbers

b.) Ascending/descending flight numbers

c.) Alphabetical passenger names

d.) Provide the ability to search the report for any text in any field.

3.) Print and display the report on demand.

4.) All bags read by the scanners shall be verified for proper destination. In the event that a bag does not have a proper destination, record the bag tag in the above report.

p. **BSM Report**: Printout of all tag numbers during the operational period.

1.) Present: Remove if no BSM feed

BSM REPORT

TAG#	NAME	FLIGHT#	AIRLINE	TIME	READ	BAG TYPE	BSM REC'D	PRINT	LATE
4001512137	Smith, John	601	**	08:00	Array 1	outbound	7:34	7:33	x
4001512138	Johnson, Jane	842	**	10:08	Array 2	outbound	9:12	9:11	x
4001512139	Jones, Tom	1003	**	13:48	PE1	transfer	11:57	11:56	x

2.) This report shall be sortable by:

a.) Ascending/descending tag numbers

b.) Ascending/descending flight numbers

c.) Alphabetical passenger names

3.) Provide the ability to search the report for any text in any field.

4.) Print and display the report on demand.

5.) Show every occurrence of a tag being read.

6.) Time indicates the time the bag tag was read.

7.) Print indicates time bag tag was printed.

8.) BSM REC'D indicates time the BSM was received at the BHS from the Host.

q. **Purge/Recirculation Line Report**: The report shall list each bag (include bag ID# unless lost in tracking) with a time stamp that is transported on the purge/recirculation line with details as to why. The reasons shall include the following as minimum: **Select proper report name**

1.) Lost tracking

2.) "EDS Unknown" due to EDS fault reset

3.) "EDS Unknown" due to EDS/BHS Communications fault

4.) Failed to divert to ETD due to ETD SB line full/faulted

5.) Failed to divert to EDS due to no EDS device available or ED queue conveyors full

r. **Bag Data**: Consisting of the following items (Assuming this information is available to

the BHS):

1.) BHS Tracking ID Number for each bag (Shared by BHS and EDS)

2.) Bag Type (OOG or in-spec)

3.) Screened by EDS Machine with machine Serial Number

4.) Time Stamped when entering into the EDS machine or time Stamped when OOG bags are identified

5.) Level 1 Screening Status

6.) Time Stamped at Level 1 Screening Decision

7.) Level 2 Screening Status

8.) Time Stamped at Level 2 Screening Decision. Note: Not all EDS machines have the capability to time stamp at both Level 1 and decisions – Confirm with EDS OEM.

9.) Time Stamped when delivered to CBRA Unload Conveyors

10.) Time Stamped when removed from CBRA Unload Conveyors

11.) CBRA ETD Screening Station Number (if available to the BHS)

12.) Time Stamped when Resolved by CBRA Screening Station (if available to the BHS)

s. **EDS Statistics**: Consisting of the following items (The following statistics shall be considered SSI and treated accordingly) (*Assuming this information is available to the BHS*):

1.) Number of Bags Alarmed by Specific EDS Machine

2.) Number of Bags Cleared by Specific EDS Machine

3.) EDS Machine Faults (if known)

4.) EDS Machine Hours of Operation

5.) Start Time of Operation

6.) Start Time of Fault

7.) End Time of Fault

8.) End Time of Operation

t. **Critical Tracking PEC: Delete if PGDS V1.0** Immediately upstream and downstream of each EDS, prior to and after each tracked divert point, and at the last tracked photoeye entering the CBRA, the BHS shall report the following for each activation of these photoeyes:

1.) Bag ID

2.) Bag Disposition

3.) Time, in hours: minutes: seconds

4.) Totals for each disposition type

u. **PEC Tracking Statistics** - Consisting of the following items:

1.) Total number of bags seen at each PEC

2.) Total number of missing bags at each PEC

3.) Total number of unknown bags at each PEC

4.) Total number of jams at each PEC

5.) Total number of missing bag jams at each PEC

v. **Tracking Statistics** - Consisting of the following items:

1.) Total Number of Bags in Track

2.) Total Number of Bags Lost in Track

3.) % Total Number of Bags Lost in Track

4.) Count of Lost in Track at each device location

w. **Baggage Measuring Array Statistics** - Consisting of the following items:

1.) Total Number of Bags per array

2.) Total Number of OOG Bags per array

3.) Total Number of OS Bags per array

4.) Total number of standard items per array

5.) Total number of items not dimensioned per array

6.) Failures per array, detailing individual items that failed and duration of downtime

x. **OSR Statistics** - Consisting of the following items (The following statistics shall be considered SSI and treated accordingly) (*Assuming this information is available to the BHS*):

1.) Total Number of Bags through OSR

2.) Total Number of Bags through OSR by EDS Machine

3.) Total Number of Bags Cleared by OSR

4.) Average Time to Clear Bag by OSR

y. **CBRA Area Statistics** - Consisting of the following items (The following statistics shall be considered SSI and treated accordingly) (*Assuming this information is available to the BHS*):

1.) Total Number of Bags Received in CBRA

2.) Total Number of Bags Cleared by CBRA

3.) Total Number of Bags per CBRA ETD Screening Station

4.) Bag Time In/Out at each CBRA ETD Screening Station

5.) Number and Type of Alarmed Objects per bag

6.) Baggage Process Timer (see section 7.2.14.2 in the PGDS Version 5.0)

z. **Time in System Statistics** - Consisting of the following items (*Assuming this information is available to the BHS*):

1.) Minimum/Maximum Time Bag was in System (Measured from ATR point positive bag tracking is established to security status identification goes clear)

2.) Average Time Bag was in System

3.) Average Time Bag was in System by Screening Level

aa. Daily Report Standards per PGDS v5.0, Appendix A: Consisting of the following items:

1.) Daily CBIS Summary Report (Table A-1)

2.) Daily CBIS Bag Volume Report (Table A-2)

3.) CBIS Executive Summary Report (Table A-3)

4.) CBRA Executive Summary Report (Table A-4) - SSI

5.) PEC Tracking Reports for all PECs within the security tracking zone which include:

a.) Total Bag Count

b.) Total Missing Bag Count

c.) Total Unknown Bag Count

d.) Total Purged Bag Count

Q. Baggage Control Room Equipment

1. Submit all Baggage Control Room tenant finishes required for supporting the BHS Control Room equipment. As a minimum, the submittal shall include:

a. Proposed layout (pending the City of El Paso or its representative approval)

b. Phasing Layouts

c. Final Layouts

d. Required completion date

e. Environmental requirements (including HVAC)

f. Estimated combined heat output of computer equipment

g. Power requirements (including UPS sources)

h. Data transmission and communication drop locations (including the number of communication lines that are to be provided by the City of El Paso)

i. Clear heights

j. Lighting and outlet requirements

k. Fire protection requirements

l. Architectural Requirements

m. Coordinated scheduled equipment delivery and installation dates

2. Provide readily available industrial equipment suitable for the purposes intended and functionally reliable within a Control Room environment.

3. Submit to the City of El Paso or its representative for approval, quantities and manufacturer of proposed equipment. At a minimum, unless otherwise approved, the Control Room shall contain the following:

a. Workstation computers and related equipment (such as but not limited to printers, monitors, and keyboards) as described elsewhere loaded with application software for system monitoring and access system statistics.

b. Scanner Array operational information – The SICK Remote Diagnostic Tool (RDT) shall be provided by the BHSC and accessible through the control room web browser when SICK ATRs are used.

c. If the centralized architecture is utilized, redundant master PLC cabinets housing the scanning and tracking processors. The cabinets shall be on separate power supplies (feeds).

d. Uninterrupted Power Supply(s) (UPS) shall be provided. Minimum protection time shall be two (2) hours.

e. Provide all interfacing conduit and cabling between equipment.

f. All equipment containing memory shall be backed up by an external source (e.g. USB Flash Drive, portable hard drive, read/write DVD/CD-ROM).

g. The backup source shall have the ability to download all computer equipment with back up memory programs.

h. Instructions shall be provided to aid operator in the download of memory backups.

i. Communications System such as telephones, fax machines, and intercoms. (by the City of El Paso).

R. Satellite Workstation

1. Provide a separate line item cost for one "satellite" desktop workstation and report printer in the TSA/EDS control room.

2. Each satellite MDS station shall consist of, as a minimum, a redundant PC with 22" monitor and appropriate Graphics Card, DVD-RW, 1 TB Hard Drive, 8 GB RAM, an audible Alarm similar to the centralized MDS with both an alarm silence and a means to Enable/disable this feature. Provide all software to support the functions associated with the use as a satellite MDS.

3. The workstation shall provide the following functionality:

a. The satellite MDS station for the TSA shall display all graphics, alarms, alarm text and any messages that are associated with the new outbound BHS subsystem.

b. The satellite MDS workstation shall not be capable of any modification to the existing sort system, flight schedules, make-up assignments, HSPD controls.

c. The satellite MDS workstation shall provide read access to the daily alarm logs. This access shall also allow the user to save the alarm log data to a CSV (Comma Separated Variable) file, onto a USB Flash Drive, and Hard Drive in the remote workstation.

d. The method of connection between the new centralized MDS, which is located in the BHS control room, and the satellite MDS workstation, shall be such that the remote MDS station will be operational at all times the existing MDS is operational.

e. The satellite MDs workstation shall be password protected, similar to the new (centralized) MDS and require login to perform any functions other than view the display (i.e., anything to do with the alarm logs).

S. Security

1. Provide a secure computer control environment for the BHS. To achieve this, the network operating system shall provide multiple levels of password access appropriate for the level and authorization of staff, workmen or operators working on the BHS.

2. Different passwords are used for different access combinations by:

a. Personnel group: Handling agents, apron/baggage supervisors, maintenance staff, control room operators, the City of El Paso's staff, maintenance contractors, or TSA Managers.

b. Different operating modes: Operations, monitor, training/simulations or configure.

c. Modes of access: From control room and backup sites via the airports's network.

3. Global commands that have a large impact on operations will require higher-level password e.g. invocation of fail-safe to BHS equipment.

4. Operator personnel shall monitor all security violations through system printer and alarms since operations is manned round the clock although group or operational staff may not have very high password levels. All security violations will be logged by the system. Security violations shall include the following as a minimum:

a. Unsuccessful log-ins

b. Expired password date

c. Failure to log-off

d. Attempting to gain access to a user level than logged on for

e. Operator initiated event

5. Under Fail-safe conditions, BHS shall default to a pre-defined state (Normally ON). The Contractor shall provide details of how forced fail-safe mode is being invoked for the City of El Paso or its representative's approval.

6. Provide a test mode to allow tests to be carried out off-line on any software modifications carried out before saving the modified program into the live systems.

7. All of the system workstations shall have identical functional capabilities. Selective access to the different functional capabilities shall be controlled through the use of log-on IDs and passwords.

8. The password system must have at least six (6) levels of security clearance, e.g.:

   a. Handling Agent

   b. Operator

   c. System Engineer

   d. System Manager

   e. System Administrator

   f. TSA Manager

9. These different levels of security clearance will differ in the access to the various system functions regarding system operation and configuration. Differentiation shall be at least performed for the following functions:

   a. Display modification

   b. Database modification

   c. Report modification

   d. System configuration

   e. Report display

   f. Command initiation

   g. Operator actions

   h. Access to operating system

   i. Application programs

10. Security shall be performed at the access level to a menu, configuration dialogue, or command window.

11. A user level will be assigned to every person who is given access to the system. The user shall be required to log-on to the system through the various interfaces. All log-on shall be recorded in the system event log. Unsuccessful log-ins shall raise an alarm. The system shall maintain a security database of the number of allowable unsuccessful log-ins and password expiry dates, which is maintained by the security officer. This feature shall allow identification of the operator responsible for all operations executed from the specific workstation or interface.

12. If, after eight ((8) configurable) hours an operator has not logged off, an alarm message shall be sent to that operator workstation until that operator is logged off. The intent of this action is to prevent log-on from extending across operator shift changes.

13. Any system event that is operator initiated shall be recorded with the ID of the operator and the workstation it was issued from.

14. Access to the security configuration shall only be allowed to the user with the highest level, e.g. system administrator.

15. Level of access by vendor dial-in shall be to the City of El Paso or its representative's approval.

T. Software Design Requirements

1. Incorporate software/hardware consistent with industry standards, and where required software/hardware that is compatible with the City of El Paso's equipment. Schedule a series of coordination meetings with the City of El Paso or its representative (on-site) prior to detailed design to ensure the connectivity/compatibility between the City of El Paso reservation system and the proposed software/hardware system. Provide all connections between the BHS related computer/PLC systems and the City of El Paso's Reservation System.

2. Provide all software proprietary information to the City of El Paso upon Final Acceptance, but this shall not release the BHS Contractor of responsibility for any technical defects (bugs) that occur with the software. In addition, submit to the City of El Paso or its representative a staffing schedule (supervisors and software engineers) to accomplish the specified work.

3. For all software unique to the BHS and not "commercially available" the As-Built Deliverables shall include, as a minimum, all of the information necessary to make revisions in the software program applications for the BHS for changes or expansions or extension of the BHS, such as functional, performance and interface requirements; descriptions of the supervisory, control, and operating software; source listings; flow charts; configuration control documentation; and programmer and user manuals incorporating appropriate modification and control procedures, including the name of any sub-contractor used for preparation of this software.

4. For all "commercially available" software used in the BHS, the As-Built Deliverables shall include all of the documentation that is available from the supplier of such software. Copies of all programmer and user manuals and other similar material shall be provided to the City of El Paso along with a complete and fully documented listing of all software programs.

5. All systems, file servers and workstations shall be equipped with continuously running virus detection software to prevent virus infection. Submit details of the virus protection program (i.e. manufacturer and model/version) to the City of El Paso or its representative for approval.

6. At a minimum, adhere to the following software architecture and provide all associated hardware required to accomplish intended functions of the BHS:

   a. Human Machine Interface (HMI)

      1.) Shall provide a user-friendly interface.

      2.) Shall be of the multi-tasking operating system type that can control multiple programs at once.

      3.) Shall incorporate object linking and embedding (OLE) technology, or similar.

      4.) Shall have the ability of running a software program that will automatically monitor the "wellness" of all installed software on the BHS workstation computers. Provide the capability of automatically initiating a self-test routine from any/all of the installed computers.

   b. Networking/Communication

      1.) Shall be compatible with the data communication highway(s) (DCH) protocols.

      2.) Shall provide fast interfacing between all communication/control tiers.

   c. Database/Sortation Controller

      1.) Shall provide the handshake between the system bar code tag types, and output destination.

      2.) Shall provide the means to route bags to correct output destination(s) in all modes of operation.

      3.) Utility

4.) Shall aid in the linking of various applications (programming).

5.) Shall generate, edit and provide tangible maintenance diagnostic and management information system reports.

U. Software Confidentiality

1. The BHS Contractor shall not disclose, or use in future work, any proprietary operation information of the City of El Paso facility, or any information considered a trade secret by the City of El Paso, which was obtained during the course of the project work.

2. Except as otherwise required by law, the City of El Paso will not publicly disclose trade secrets or proprietary software information obtained from the BHS Contractor in the performance of the BHS Contractor's obligations pursuant to this Contract. To the extent it is necessary to provide BHS Contractor's trade secrets or proprietary software information in order to operate or maintain the BHS, the City of El Paso, by contract, will prohibit the City of El Paso's operation and maintenance contractor from publicly or privately disclosing the BHS Contractor's trade secrets or proprietary software information.

3. Any information that the BHS Contractor believes is a trade secret or proprietary software information shall be specifically identified and marked as such. Blanket type identification shall not be permitted.

4. In the event the City of El Paso receives a request for the BHS Contractor's specifically identified trade secrets or proprietary software information, the City of El Paso will notify the BHS Contractor and the BHS Contractor will be required to fully defend, in all forums, the City of El Paso refusal to produce such information. Otherwise, the City of El Paso will make such information available.

5. All software version upgrades and bug fixes for proprietary software shall be provided during the one year warranty period.

V. Source Code

1. All software shall be delivered with well-commented source code in addition to the executable version. Software shall be delivered in both hard copy and machine-readable formats on a media acceptable to the City of El Paso. The BHS Contractor may propose a non-disclosure agreement.

2. The City of El Paso shall have permission to use the software as necessary to support operations at El Paso International Airport, El Paso, Texas once obtained from the BHS Contractor.

3. A backup copy of the configured system software shall be provided on USB Flash Drive, DVD-ROM, or CD-ROM media. All original distribution software shall be delivered with an installable backup. While USB Flash Drive is the preferred media types, DVD-ROM or CD-ROM is acceptable if required by the specific software.

- END OF PART II -

PART III - EXECUTION SPECIFICATIONS

3.01 PREPARATION

A. General

1. Verify conditions in the field prior to start of work. If unanticipated mechanical, electrical, or other elements that conflict with intended function or design are encountered, investigate and measure both nature and extent of the conflict. Submit written report to the City of El Paso in accurate detail. Pending receipt of directive from the City of El Paso, rearrange work schedule as necessary to continue overall job progress without undue delay.

2. Cover and protect systems and equipment from damage and soiling during installation, demolition, removal or alteration work. Erect and maintain dust-proof partitions and closures to prevent spread of dust or fumes to occupied portions of the building.

3. Obtain and pay for all airport security badges, permits, inspection fees, and certificates relative to all phases of the BHS construction.

4. Provide supports or bracing to prevent movement, settling, or collapse in which an area is to be removed and adjacent system is to remain. If safety of system appears to be endangered, cease operations and notify the City of El Paso immediately. Take precautions to support endangered work until determination is made for continuing operations.

5. Locate, identify, stub off and disconnect electrical system services that are not indicated to remain. Provide bypass connections to maintain continuity of electrical service to remaining system. Obtain permission and provide advance notice to the City of El Paso if shutdown of electrical service is necessary during changeover.

3.02 WORKMANSHIP

A. General

1. Perform installations, demolition, removal and alteration work as shown within the specified BHS right-of-ways, with due care, including support and bracing. Be responsible for damage, which may be caused by such work, to any part of existing system or items designated for reuse.

2. Perform new work in accordance with applicable technical sections of the specifications. Where cutting and new work involve the exterior building envelope, consult the City of El Paso to ascertain if existing guarantees, warranties or bonds are in force and execute the work so as not to invalidate such agreements.

3. Execute the work in a careful and orderly manner, with the least possible disturbance to the public and to the occupants of the building(s).

4. Materials installed, whether provided by the BHS Contractor or not, shall be installed in a neat and workmanlike manner. Particular attention shall be paid to manufacturer's instructions as to installation procedures.

5. Protect the employment and places of employment of each of his employees engaged in the construction work by complying with the appropriate standards as prescribed by OSHA.

6. Take necessary precautions to keep noise producing operations (such as impact hammering, Carborundum sawing, compressed air machinery and the like) to a minimum. Select equipment, which is of a quieter nature than others and enclose areas of operation with acoustical screens and partitions or other means necessary to accomplish reduction of noise.

7. Equip motorized equipment with mufflers or other types of sound control and blanket equipment with acoustical materials.

8. Locate installation, demolition and alteration equipment safely so that no part thereof shall endanger normal airport operations, including runways, terminals, terminal buildings, approach ways, and power utility, lighting and communication lines.

9. Promptly remove debris to avoid interference with system operations.

10. Cut out embedded anchorage and attachment items as required to properly provide for patching and repair of the respective finishes.

11. Ensure that the standard of work and materials throughout the Project shall be of first-class quality and workmanship in every respect; the City of El Paso will not accept workmanship, which for any reason, is otherwise.

12. Ensure that all equipment, components and materials are free from defects.

3.03 FABRICATION & INSTALLATION SPECIAL CONSIDERATIONS

A. General

1. Equipment is to be designed to meet the requirements of handling airline baggage. This entails consideration and care to be used particularly in fabrication of all components to ensure that projections, welds, sharp corners and transfer points that may cause possible damage to various types of bundles, handbags, suitcases, and trunks are eliminated. Ensure that bottom glides on cases, strings, tags, straps, bag handles, destination tags and the like are guarded against damage on side guards, transfer points, and all surfaces which baggage may contact on the conveyor system.

2. Coordinate all on-going site work and with concurrent airport/airline operations.

3. Take into effect any long lead procurement items and take the necessary actions required to complete any installation in the ceiling space.

3.04 DELIVERY, STORAGE, HANDLING AND ON-SITE RESPONSIBILITIES

A. Delivery, Storage, Handling

1. Assume responsibility for the receiving, unloading, storage, protection, security and distribution of all material delivered to the site associated with this Contract.

2. As necessary for the work, provide flagmen and erect proper barricades and other safeguards, post danger signs and other warnings as warranted by hazards and existing conditions.

3. Assume responsibility for receiving, storing, handling, setting and connecting all equipment required for the BHS installation.

4. Provide and maintain adequate protection against weather so as to preserve his work, materials, equipment, apparatus and fixtures free from injury, pilferage or damage.

5. Furnish to the City of El Paso, on demand, Bills of Lading for all equipment being shipped to the work site. Identify on each Bill of Lading each component and assembly involved, the equipment items to which they belong, the date and time of pick-up and the expected date and time of delivery to site. The shipping of such material shall involve proper identification of items, proper packing and proper means for unloading them at the work site.

B. On-Site responsibilities

1. General

a. Erect all temporary barriers and barricades to separate work areas from areas of public access, if applicable.

b. Provide exhaust fans (e.g. HEPA filter) to limit fumes/odors from welding, metal cutting and painting if the work being carried out is in an occupied/operational area.

c. Coordinate with any interfacing, on-going site work.

d. Provide adequate portable office facilities, communication, equipment and locker room for field force.

e. Pay all costs of rental, installation, use and removal of accommodation and communication equipment.

f. Furnish shop drawings for any substitutions of equipment specified in this specification or shown on the drawings. During the progress of the job, revised drawings may be issued. Ensure all work is performed based on the latest drawings issued.

g. Clean and maintain work spaces, travel routes, and any other areas of work effected by his trade including but not limited to:

1.) Remove on a daily basis of all erection rubbish and discarded materials.

2.) The burning of waste material is prohibited. Remove and dispose of scrap and waste material in accordance with applicable laws, codes, regulation ordinances and permits.

3.) Be responsible for all fines received for failure to maintain or perform cleaning, and all costs due to damages directly caused by this Contractors work.

4.) Provide hoisting material for rubbish removal.

h. Be cognizant that the equipment and lay down areas for the work may/will require relocation as directed by the Construction Manager or the City of El Paso.

i. Be responsible for any employee parking and any site transportation that may be required to/from the construction site.

j. Be responsible for any escort service required for the transportation of materials and employees on the ATO side of the facilities.

k. Enforce the City of El Paso's instructions, laws, and regulations regarding signs, advertisements, fires

and the presence of liquor and firearms by any person at the job site.

l. Provide the services of a competent field superintendent during erection, wiring, testing and correction of any discrepancies occurring during the Final Acceptance period.

m. Smoking shall only be allowed in areas as designated by the City of El Paso.

2. Mechanical Work

a. Provide and install all supports, anchors and any other special considerations or requirements not provided for in this Specification but necessary to facilitate the complete mechanical installation and safe operation of all equipment and components.

b. Provide electrical connections for heavy-duty machinery, such as welding machines, and battery chargers as required for the installation of the BHS.

c. As construction proceeds, perform any additional site surveys which may be necessary.

d. Document in writing any mechanical, electrical or piping conflicts that may impact conveyor installation and submit to the City of El Paso or its representative immediately following the site inspection and prior to the installation.

3. Electrical Work

a. Provide the necessary conduit, wiring and other electrical components to complete the electrical installation from power distribution points (PDPs), to the equipment and be responsible for all electrical interconnections within the equipment and system.

b. Provide all labor, materials, equipment and service necessary for and reasonably incidental to proper completion of all electrical work including electronic controls as required for the proper operation of the system as detailed in these specifications. Provide within the design standardization of components, function and maintenance procedures.

c. Drawings and specifications are to be considered as supplementing each other. Work specified but not shown, or shown but not specified, shall be performed or furnished as though mentioned in both specifications and drawings.

d. Provide and install as required, at no additional cost to the City of El Paso, minor items, accessories or devices reasonably inferable, as necessary, to complete the electrical installation.

e. Refer all conflicts between the requirements of these specifications and drawings or between either and applicable codes to the City of El Paso or its representative for clarification before proceeding with the affected portion of the installation.

f. Obtain and pay for all permits, inspection fees, and certificates relative to the electrical work. Deliver all certificates and letters of approval to the City of El Paso upon completion of the work.

g. Locate all electrical equipment as shown on drawings. However, actual field conditions shall be checked to determine exact locations and avoid interference with other trades.

h. At no additional cost do any reasonable location adjustment of electrical equipment requested by the City of El Paso prior to installation.

i. At no expense to the City of El Paso, correct work improperly installed due to lack of construction verification.

j. Install materials and components in a neat and proficient manner. Particular attention shall be paid to manufacturer's instructions as to installation procedures.

3.05 INSTALLATION

A. General

1. Installation of the BHS shall be in strict compliance with the Construction Drawings, to be prepared in compliance with this Specification document and Contract Drawing Package. These drawings shall show in detail the location of each conveyor and the relationships between adjoining conveyors, conveyors and slides or chutes and any other transfer, which might affect baggage movement.

2. Assume responsibility for all interfaces between the BHS and the Facility. Check the "As-Built" condition of the Facility as defined in drawings and as confirmed by site inspection prior to fabrication, installation or removal of any BHS equipment. The system arrangement and layout shall ensure equipment alignment and clearance when installed in the Facility.

3. Provide all equipment required to complete the total system. Furnish all tools and necessary equipment for the performance of the installation tasks and exhibit sufficient planning to ensure their availability at the job site as required by the workflow. The City of El Paso will not furnish tools, forklifts or erection equipment.

4. Staff the project to ensure timely completion. Accelerate construction as required if schedule milestones are not met.

5. Provide all supports, anchors and any other items necessary to facilitate the complete mechanical installation and safe operation of all equipment and components.

6. Where equipment is to be installed in an operating facility provide a construction schedule to the City of El Paso or its representative for approval that will minimize interference with normal operations.

B. Tolerances

1. Maintain the following tolerances for BHS equipment installation:

a. Maintain dimensions to exterior building walls or building columns within 1/4".

b. Install all conveyors level from side to side, within 1/8" across the width of the conveyor. In the event that the floor/ceiling is sloped, install the conveyors parallel to the floor in the direction of belt travel.

c. In plan and in elevation, install conveyors straight to within 1/4" of a taut line stretched at the belt elevation over the length of each intermediate section of conveyor.

d. Plumb supports vertical within 1/8" per 3 feet.

e. Maintain side clearances to building elements including walls and columns a minimum of 6" unless otherwise specified.

f. Verify all “As-Built” and existing building conditions prior to final fabrication.

g. Shimming between adjacent intermediate sections of conveyors is permissible but do not exceed 1/4" of total shim stock at any one location.

h. As the building area becomes available, install all header steel (even if header steel is ahead of conveyor fabrication/delivery), to preserve conveyor right-of-ways. Preserve conveyor right-of-ways in all cases as soon as practicable.

i. The maximum allowable lateral offset in the conveyor slider bed shall be 1/8" in 40 feet of length.

C. Side Guards

1. Install side guards so that adjoining guards do not project into the flow of baggage. Clean any field cut edges and welds of burrs, and slag and grind smooth. Filler material at joints or seams is not permissible.

2. Notch the formed edge of the side guards around any vertical hanger or leg.

3. All side guard joints are to provide a snag-free surface. Side guards shall provide a continuous, uninterrupted surface the entire length and height of the joints. Lapped or out-of-line joints will not be accepted. Welding of joints is not permitted.

4. Care is to be used in the design and installation of the side guards at the point of intersection with the conveyor fire/security doors. This interface point must not act as a snag/catch point for baggage or baggage tags.

5. Conveyor side guards must be flared on the downstream side of the intersection with the conveyor fire/security doors. Additionally, special detail must be provided with the conveyor bed section at this point. Its width must be extended to close the void between the bedside rails and the flared side guards.

6. Adjacent side guard joints are to be of the bolted butt coupled joint type at power turns and conveyor sections. Coupling of adjacent side guards or head/tail pulley supports to power turns shall be in alignment with the effective belt width of the turn to prevent interference with baggage movement.

7. Side guards of power turns must not be welded to adjacent straight conveyor side guards.

8. Mounting of any mechanical or electrical equipment on the outside radius side guard of power turns is not accepted since it restricts maintenance access to the outer perimeter chain or guide bearings of the power turn belt.

D. Belt Splicing/Lacing

1. Belting material and the related lacing hardware must be trimmed in a 1" “V” notch fashion. Additionally, the nylon jacket of the lacing connecting pin (cable) must be enlarged with heat to prevent any lateral movement of the connecting pin (cable).

2. If “dutchmans" are used, the length of the "dutchman" must be at least equal to or greater than the circumference of the conveyor drive pulley.

3. All belt splices, shall be cut square, to ensure proper tracking.

4. Install each lacing with a single lacing pin (cable) extending the full width of the belt.

5. Assemble the lacing so that the centerlines of the matching belts are in line within 1/8".

6. The actual length of belting installed on each unit is to be included on system drawings and in the spare parts list.

7. All rough top belting to be ground smooth within 1" of the cut end to allow proper seating of the belt lacing.

8. In locations that require a noise level of 65 dB (A) or less, such as the OSR or public areas, use vulcanized spliced, endless belting, or other types of belting that reduce noise levels.

E. Belting

1. Check all pulleys and rollers to be plumb and square to the centerline of the conveyor. Adjust when necessary.

2. Free conveyor beds of all foreign material and broom clean before pulling the belt.

3. Minimize number of belt lacings on each conveyor. Do not make belt segments shorter than 4'. Maximum acceptable number of lacings per conveyor belt segment is two (2).

4. Both sides of the pulley shaft elevations at the bearings shall be set within 1/32" of one another.

F. Belt Tracking

1. Ensure all belts track within 1 inch of center on any drive, tail pulley or intermediate point.

2. Run each conveyor for a minimum of 4 hours with no load and 4 hours with a baggage load as encountered in actual service before acceptance testing.

G. Floor Supports

1. All conveyors shall be adequately sway braced in order to ensure that there is no lateral or longitudinal displacement.

2. All support structure must be designed and installed so that maintenance access to the conveyor components, gap pans and access to catwalk(s), work areas and drive aisles are not blocked.

H. Overhead Supports

1. Provide for the design and structural integrity of all bolts, hangers, and support structures and provide all necessary materials required for installation.

2. All conveyors shall be adequately sway braced in order to ensure that there is no lateral or longitudinal displacement.

3. Locate conveyor supports at intermediate sections splices at 10 feet maximum to provide a rigid and rugged installation. Hanger rods shall be a minimum diameter of ¾ inch.

4. Installation and layout of header steel and all support structure shall not pose interference to maintenance and operation access.

5. Repair/replace both new and existing fireproofing materials removed to allow the installation of BHS equipment header steel and supports structures.

6. Vibration isolators shall be used to ensure that there is no noticeable vibration transmitted to the building. For installation of vibration isolators, adhere to the following criteria:

    a. Where compression-type vibration isolators are installed below the sill, the threaded rod shall have a lock washer, a single flat washer, and a single nut above the sill while utilizing a single flat washer with a single nut and a single jam nut, installed in a jam configuration, below the vibration isolator. In this instance, the diameter of the flat washer must be equal to or greater than that of the contacting surface of the isolator.

    b. Where compression-type vibration isolators are installed above the overhead support structure, the threaded rod shall have a single flat washer (the diameter of which being equal to or greater than that of the contacting surface of the isolator) and one eccentric locking nut above the vibration isolator. Below the support structure the threaded rod shall have a lock washer, a single flat washer, and a single nut.

    c. Where spring-type vibration isolators are used, the threaded rod shall have an eccentric locking nut, a single flat washer, and a resilient washer in contact with the spring mechanism.

7. Provide means of height adjustment on all hanger rods. Once the proper heights are established, lock the adjustments by means of lock nuts.

8. Provide sufficient length of hanger rods to allow for height adjustment. Do not deform threads on threaded rod which would prevent the ability for height adjustment.

I. Anchoring

1. Firmly anchor all equipment and structures to the floor or building structure where permitted, subject to review and approval, by the City of El Paso or its representative. Align, level and finish grout, as required.

2. Anchor floor supports to the floor with a minimum of two (2) stud expansion anchors having a minimum size of 1/2" diameter by 2-3/4" long, unless otherwise noted on the specification drawings.

3. Weld floor supports, which rest on a steel mezzanine or intermediate structure.

4. Anchor impact protection with a minimum of four 3/4" diameter epoxy adhesive anchors, each having a minimum tensile load of 7000 pounds, a minimum shear load of 4300 pounds, and a minimum embedment of 5 1/16”, unless otherwise noted on the specification drawings. Baseplate shall be Grade 36 steel and supported by a 1/4” thick (min) structural non-shrink grout with a minimum compressive strength of 2000 psi.

J. Lubrication

1. Fill all reducers to the proper oil level using oil recommended by the manufacturer.

2. Install breathers at the highest opening.

3. Clean roller chains of dirt or debris and manually lubricate per manufacturer's recommendations.

4. Replace all lubrication fluids if testing or checkout period exceeds manufacturer's suggested start-up change-out interval.

5. Apply grease per manufacturer's specifications to all grease fittings (unless they are sealed for life type bearings) prior to initial start-up of the equipment.

K. Motor Installation

1. Wire each motor on all components to a separate disconnect switch which shall be mounted within sight of the motor but not more than 3 feet from the motor.

2. Provide a means of disconnecting power, including the capability of being locked in the “Off” position that meet or exceed the requirements of NEC Article 430 (or applicable local code), to any clutch or brake (if separately or group powered) mounted as part of drive unit so as to minimize the potential of electrical shock during any servicing or maintenance operations.

L. Jacking Bolt Installation

1. Install all jacking bolts in conjunction with pulley and motor bearing housings based on the following criteria:

   a. When mounted in a threaded bracket, engage the bearing with the cup of the jacking bolt and lock the jacking bolt in position with a jam nut on the inside of the bracket (i.e., between the bearing housing and the bracket) to ensure the proper locking configuration.

   b. When mounted in a non-threaded bracket, engage the bearing with the cup of the jacking bolt, position a jam nut on the inside of the bracket, and position a single flat washer, lock washer, and finished or semi-finished nut on the outside of the bracket (i.e., between the jacking bolt head and the bracket) to achieve the proper locking configuration.

2. Use of socket male/female adapters in conjunction with the jacking bolt is unacceptable.

3. Allow for minimum adjustability of the jacking bolt on either side of the mounting bracket equal to the maximum amount of adjustability provided for the associated bearing by the mounting slots.

M. Sheave/Sprocket Alignment

1. Align shafts, sprockets and sheaves using a steel straight edge. The use of a string for this purpose is not acceptable. Demonstrate during Acceptance Test that corresponding surfaces of mating sprockets/sheaves are in line within 1/32" in 24". Misalignment shall be determined by placing the straight edge against the face of one sprocket/sheave and measuring the gap it makes with the opposite sprocket/sheave. The operation shall then be reversed so that a total misalignment can be determined.

N. Fasteners

1. Protect all fasteners (such as but not limited to nuts, bolts, screws, and setscrews) against accidental loosening by the use of lock nuts, lock washers, jam nuts, or other suitable means, and against corrosion by plating or the use of corrosion resistant materials such as zinc plating or stainless steel materials.

O. Shaft Mounted Components

1. Mount all shaft mounted components using keys, splines, or equivalent, with positive retention devices.

P. Painting and Finishing

1. Equipment Finish

   a. Stainless Steel Remove if no Stainless

1.) Cover all metal components and surfaces of conveyors in public view with Type 304 stainless steel with No. 4 brush finish. Stainless steel shall incorporate smooth flush edge seams. Radius type edges are not acceptable.

2.) The Provide for the design; fabrication and installation of stainless steel trim frames around conveyor wall penetrations in public areas. The trim frames will be constructed of 12 gauge, 4" x 4" stainless steel angle. Coordinate trim design/details with the Architect, the City of El Paso or its representative.

3.) All stainless steel trim elements and related connections are to be smooth and flush without openings or projections on which bag tags or straps may catch.

4.) All flat head screws used to attach the stainless steel shrouding, such as the horizontal portions attached to the conveyor bed, are to be completely countersunk so that no portion of the screw head is above the adjacent surfaces. Such flat head screws are to be of the Phillips Head type. Grinding or filing of the screw heads to accomplish the above is not acceptable.

5.) Field welding of any stainless steel trim element is not acceptable. Additionally, no blemishes of the stainless steel trim elements shall be accepted. This includes those blemishes that are caused by poor manufacturing practices as well as those caused in the field plus those caused by field attempts to remove any blemish.

b. Protect all metal surfaces from corrosion using one or more of the following methods:

1.) Electro-galvanize or use stainless steel for slides and chutes unless otherwise specified on the contract drawings.

2.) Electro-galvanize or hot-dip galvanize conveyor side guards if exposed to outdoor environment, and paint on the outside only if used in interior areas.

3.) Use cold rolled or hot rolled low carbon steel primed and painted on both surfaces in all interior areas.

4.) As an alternative to items .2) and .3) above, Powder Coating can be offered as an alternative due to superior quality and resistance to the elements.

5.) Use as received pre-painted housings from component supplier, such as motors, gearboxes and bearing housings.

6.) Paint conveyor slider bed components only on the outside exposed surfaces. Do not paint the surface in contact with the belting.

7.) Finish paint electrical enclosures normally purchased primed prior to assembly and delivery to the construction site.

8.) Protect all unpainted surfaces (shafts, slider bed, side guards) with a suitable rust inhibitor during shipping and installation.

9.) Prime and finish paint all catwalks, stairways, ladders, and support steel.

10.) Provide galvanized threaded rods. Protect the ends of all threaded rods with a suitable galvanizing spray after the threaded rods are cut to length.

11.) Apply an industrial quality primer and enamel to all to-be-painted surfaces in accordance with the manufacturer's directions. All paint shall be of the same make, type and color.

c. Prepare surface to be painted in accordance with paint manufacturer's requirements and as described below. If there is a discrepancy between the two, the manufacturer's requirements will take precedence. Suitable precaution shall be taken to ensure cleanliness during the period between cleaning and other finishing processes.

1.) Preparation of Surface

a.) Prior to the application of any finish, clean all surfaces to be free of dirt, grease, oil, flux, flash metal, spatter metal, sand, rust, scale, or oxides, and all other debris that might interfere with the effective application of the finish. Clean surfaces immediately before the finishing operation. Take suitable precaution to ensure cleanliness during the period (which shall be of minimum duration) between cleaning and other finishing processes. For galvanized surfaces, adhere to the following:

(1.) Clean: Prepare surfaces so prime coat bonds well and adheres permanently.

(2.) Rust-Inhibitive Wash: Use a compatible chemical solution such as phosphoric metal etches. Thoroughly remove solution with water and allow drying.

2.) General Application: Apply primer and enamel to provide a surface of high quality appearance free from runs, sags, cracks, flaking, peeling, blushing, or other defects which may affect drying characteristics, durability, and appearance of the painted surfaces. Apply primer and enamel by brushing, spraying, or dipping.

3.) Basic Application: Finish surfaces with not less than one coat of primer and one coat of enamel. Apply the primer and one coat of enamel at the factory and the touch up of enamel, if required, shall be applied at the installation site, after erection, by brushing. When primer or enamel applied to the equipment prior to erection has been burned, chipped, or otherwise removed during erection, or where new unfinished metal is installed, finish the exposed surfaces with not less than one coat of primer and a finish coat of enamel, of the same color and type as originally painted, after sanding the surface to be painted down to the bare metal. After installation, clean and touch up all scuffed or otherwise marred surfaces, as above.

4.) Masking: Do not obscure equipment nameplates, identification plates, or other identifying markings when painting the equipment. Whenever possible, apply the plates and markings after painting. In all cases where they cannot be applied after painting, mask or otherwise protect them to retain their legibility. After painting, thoroughly and effectively remove all masking and protective coatings.

2. Conveyor Identification

a. Permanently and indelibly mark all conveyor equipment such as but not limited to conveyors (both powered and slave driven), merge conveyors, diverters, sort devices, make-up units, power turn conveyors, and tapered pulleys with its respective (discrete) identification as defined on the contract drawings. All conveyor segments and other equipment such as diverters, vertical merges/sorters and the like shall be identified as specified elsewhere in this document by carefully and neatly painting with black paint the equipment identification characters utilizing a stencil, nominally 4" in height, in a conspicuous location (on both sides of a conveyor adjacent to the conveyor drive in the case of a conveyor). The only acceptable identification markings on any conveyor equipment, is to be of the specified conveyor identification numbers for this project. Any other form of identification or markings on the conveyor equipment is not acceptable and must be removed.

b. Identify conveyors in public areas by means of engraved plaques (riveted or bolted) with 2" high black lettering on a stainless steel background.

c. Conveyor identification shall be consecutive with no missing numbers in a sequence. In the event of any additions or deletions prior to each system installation, renumber the conveyors to adhere to this requirement.

d. Completely remove or print over any identification on reused equipment or any temporary markings associated on new conveyors for manufacture, shipping or installation.

e. Where temporary markings or labels on the conveyors or other equipment are required for installation, use a medium which is readily removable with water or a readily available commercial solvent, such that they may be removed without requiring any refinishing of the surface on which they appear. After installing, remove any temporary markings.

3. CBIS Conveyor Marking

a. For all conveyors starting at the ATRs upstream of the CBIS through the clear bag sortation ATRs, including all conveyors into and out of the CBRAs, permanently and indelibly paint or tape the top and outside flange of the sideguards for all conveyor equipment such as conveyors (both powered and slave driven), merge conveyors, diverters, sort devices, power turn conveyors, tapered pulleys, and the like, with its respective (discrete) identification as defined on the contract drawings. All conveyor segments and other equipment such as vertical sorters and the like shall be identified in one of up to 4 possible color designations by carefully and neatly painting with paint (or use an adhesive tape designed for application to the painted / powder coated surface).

b. The exact color codes which will be required as well as the conveyor zones to where the specific colors shall be applied shall be reviewed and coordinated during design review process with the City of El Paso and the TSA prior to the CBIS Conveyor Marking being applied. One example of the conveyor zones which shall be considered are as follows:

1.) Conveyors from CBIS ATR to the entrance of EDS machines.

2.) Conveyors from EDS machine to Level 1 decision point.

3.) Suspect bag conveyors downstream of Level 1 decision points through CBRA unload conveyors.

4.) Clear Bag conveyors up to the Sortation ATRs.

Q. Maintenance Ladder Drop Zone Striping

1. Provide painted caution area on bagroom floor at all swing down ladder drop zones that are exposed to vehicular traffic and are associated with the BHS.

2. Paint color for pavement markings shall be Federal Standard Number 595-13538 for yellow paint.

R. Safety Signage

1. Furnish and install safety signage throughout the BHS as described within these Contract Documents and any associated addendums. The safety signage shall be located in all areas and locations where there is exposure to hazards for maintenance/operational personnel and the public. Refer to OSHA, ANSI, NEC, National Safety Council, local, federal and state codes for recommended location, size, shape, design and verbiage required for safety signage, examples of some of the types of signs are included in the contract drawings,

these examples are not to be construed as the only signs required. The verbiage of the sign shall be appropriate for the particular location/hazard.

2. The safety signs shall be clearly visible and firmly affixed. The following is a list of locations where safety signage should be placed as a minimum, this list is not to be construed as being complete since it is only provided as a guide:

   a. All potential pinch points

   b. Rotating parts

   c. Chain and V belt guards

   d. On all conveyors that are under the control of auto start

   e. Outside of electrical cabinets and disconnects boxes

   f. On all catwalks including step up/step down locations

   g. At load and unload (sort piers/make-up devices) areas

   h. At EDS devices

   i. Adjacent to HSPDs diverters

   j. Adjacent to Vertical Sort conveyors

   k. Adjacent to tip chutes

   l. Areas of low overhead clearance

   m. Fire/Security doors

   n. Around areas of false ceilings

3. Safety chains and prominently displayed placards/signs shall be placed at the bottom of ladders and stairs to indicate restricted area for “authorized and trained personnel only”.

4. Placards/signs indicating locations of all E-stop control stations and lanyards shall be clearly visible.

S. Welding

1. Nationally certified welders shall perform all welding, and all welding shall be in strict compliance with local and national codes. Provide to the City of El Paso or its representative upon request, copies of certificates verifying that the welder(s) are nationally certified.

2. Gasoline or diesel welders shall not be used.

3. Connecting welding equipment to any MCP power supply shall not be acceptable.

4. Before approving any cutting or welding operation, a fire safety supervisor or appointee shall inspect the work area and confirm that the following indicated precautions have been taken in order to prevent fires:

a. Ten pound ABC Dry Chemical Fire Extinguisher to be kept on site.

b. No flammable liquids permitted within 50 feet of work.

c. Floors swept clean of combustibles.

d. All wall and floor openings covered.

e. Covers suspended beneath work to collect sparks.

f. Opaque screens placed between work and spectators.

g. Fire watch is required to observe all work and shall remain on site for a minimum of 30 minutes after completion of work or as directed by the airport's maintenance polices.

h. The City of El Paso is to be notified prior to beginning work.

5. For work on enclosed equipment or containers (such as but not limited to tanks, barrels, ducts, and dust collectors) the following precautions shall be taken:

a. Equipment cleaned of all flammable or combustible materials.

b. Tanks or containers purged of all flammable vapors and checked with an approved gas detector.

c. Workers entering enclosed spaces shall require an enclosed entry permit from the airport safety office prior to work beginning.

T. Maintenance Access

1. Where walls immediately adjacent to conveyor equipment affect maintenance access, advise the City of El Paso or its representative of the location and size of the wall opening that needs to be developed to permit access to drive components, bearings, and other equipment that would normally be inaccessible because of the wall.

3.06 SPECIAL CONTROL REQUIREMENTS

A. Control Stations

1. Mount controls, consisting of but not limited to pushbuttons, selector switches, indicator lights, in Control Stations. All controls shall be grouped to minimize the number of operating points throughout the system. In the application of a single control for a specific function, pushbutton stations may be employed.

2. Locate control stations as specified. Position control stations so as not to impede access to the equipment for servicing.

3. Mount all Control Stations located in public areas flush to the equipment and equip with stainless steel cover plates. Control stations located in the view of the public shall not be mounted on the top surface of the conveyor front cladding.

4. Locate Control Stations so as to be clear of normal vehicular and personnel traffic lanes. Install guards to prevent inadvertent actuation where this cannot be accomplished.

5. Control Stations shall contain the appropriate control elements such as pushbuttons, selector switches, and those indicator lights, which will augment operations.

6. Control Station functions shall be identified in English using elementary concise terms supplemented by graphic symbols. All identification plates shall be mechanically affixed to the console face.

7. Control Stations shall conform to the environmental requirements specified herein. Outdoor applications shall employ weather tight, corrosion resistant boxes, switches, pushbuttons, and lights.

8. Emergency Stop pushbuttons, disrupting electrical control power, shall be employed where an emergency may require immediate shut down. Where more than one emergency stop pushbutton is used in any circuit or subsystem, only the indicator lamp in the activated E-Stop pushbutton shall be energized. Actuation of any emergency stop shall be announced on the respective status monitoring system.

9. Indicator lights, especially outside the facility, shall not be affected by extraneous light, and shall be clearly visible in all lighting conditions.

10. Control elements such as but not limited to switches, pushbuttons, and handles, shall be selected for ease of operation in an industrial "bag room" environment.

11. Control elements such as but not limited to switches, pushbuttons, indicator lights, and bulbs, shall be easily replaceable and reasonably protected from physical damage.

12. Freestanding control stations shall be mounted on extremely rugged and braced pedestals with large firmly anchored base plates. The design shall account for extraneous loading and generally abusive conditions.

13. Provide independently anchored impact protection wherever control panels, control consoles or control stations are exposed to work area traffic.

B. Photocell Functions

1. As a minimum, provide photocells to perform the following functions:

   a. Cascade Stop

   b. Jam Detection

   c. Over-Height Detection

   d. Over-Length Detection

   e. Length Measurement for Accelerated/Delayed and Added Bag Tracking in the EDS matrices

   f. Baggage Tracking

   g. Unknown Bag Jam

   h. Merge And Priority Control

   i. Auto Start

   j. Auto Stop

k. Indexing Control (Accumulation)

l. HSPD Timing

m. Failsafe

2. Combine photocell functions wherever possible provided proper operation of each circuit is maintained.

3. Cascade Stop

a. Locate a head end sensor photocell within 12" of the discharge ends of all straight conveyors and 6” on power turns and queue conveyors (or an appropriate distance from the discharge end to ensure that the piece of stopped baggage does not transition/stop on the downstream conveyor) so that the center of the photocell beam is approximately 2.5" or 3” above top of the conveyor belt to provide the signal for operation of cascade stop circuits.

b. Should a downstream conveyor stop as a result of a jam condition or mechanical/electrical failure, the conveyor immediately upstream of the stopped conveyor shall continue to run until the head end photocell is blocked. At that moment, the conveyor shall stop. The preceding upstream conveyor will run until its head end photocell is blocked. This cascade stop function will continue through the upstream conveyors until the jam/failure is cleared or the first conveyor in the subsystem has stopped.

c. The cascade stop photocell shall also be utilized for jam detection functions, but no control station shall be installed in conjunction with this photocell. Upon the detection of a jam at this photocell, initiate the following steps:

1.) Stop the conveyor with the cascade stop photocell.

2.) Provide a jam indication signal at the MDS, Touch Screen Terminal, and a visual warning signal in the field (within the vicinity of the jam location).

3.) Illuminate the jam indicator light in the nearest jam reset/restart control station.

d. Cascade controls logic shall include programming to initiate the Ticket Counter (and Curbside) Start Ready Pushbutton “Green light” to flash when the respective ticket counter (or curbside) conveyor subsystem has cascaded back to the load belt. This will notify the ticket counter/curbside agent that a jam/fault has occurred in the subsystem.

4. Jam Detection

a. Locate a head end sensor photocell to provide the signal for operation of jam detection circuits within approximately 12" of the discharge ends of all straight conveyors and 6"on power turns and queue conveyors (or an appropriate distance from the discharge end to ensure that the piece of stopped baggage does not transition/stop on the downstream conveyor). The center of the photocell beam is to be approximately 2.5" or 3” above top of the conveyor belt.

b. As a minimum, provide jam detection photocells and a jam indicator with a jam/restart/emergency stop control station in areas that have a relatively high frequency of jams. This shall include the discharge ends of all conveyors feeding onto power turns, at the bottom of inclines and decline conveyors, at all merges for both the primary and secondary lines, opposite all diverters and at any other location where experience indicates a potential jam point.

c. As soon as the photocell detects a jam (blocked for longer than an adjustable (0 to 10 seconds in the

PLC), predetermined (nominally set to 6 seconds) length of time), initiate the following steps:

1.) Stop the conveyor with the jam detection photocell and the one immediately downstream, unless the photocell is mounted on a conveyor that feeds onto a power turn. In this case the conveyor with the jam detection photocell, the power turn and the conveyor immediately upstream of the power turn are to be stopped.

2.) Provide jam indication signal at the MDS and Touch Screen Terminal.

3.) Illuminate the jam indicator light in the control station.

d. Whenever a conveyor stops for any reason, reset the jam detection timer and hold until the conveyor restarts.

e. The jam detection circuitry is only to function whenever the associated conveyor is running; i.e., if the conveyor is stopped and the jam detector photocell is blocked, the jam detection circuitry will not sense a jam condition and thus report a false jam condition.

f. Conveyors that cascade stop as a result of a jam are to be “latched stopped” through PLC logic until the jam reset pushbutton has been activated.

5. Over-Height Detection

a. Provide over-height detection photocells at every baggage input to the system to detect bags that are too high to clear the lowest downstream obstruction for all possible routes. Brackets holding the photocells and reflectors shall be adjustable for a range of heights. This photocell shall be set at 36" above the top of the conveyor belt for standard conveyors or at the maximum height of an OOG (not Oversize) bag for the Re-Input conveyors (refer to the EDS Manufacturer’s guidelines for the maximum height / length restrictions) unless otherwise stated.

b. As soon as the photocell is interrupted, stop the conveyor.

c. Provide jam indication signal at the MDS and Touch Screen Terminal.

d. Provide an oversize indicator lamp in the control station; this lamp may be the same unit as that for over-length detection. Illuminate the oversize indicator lamp in the control station if an over-height bag is detected.

e. Program the over-height circuit to require the following sequence to reset:

1.) Actuate associated E-stop

2.) Clear the photocell by removing or re-positioning the over-height bag, the oversize indicator lamp shall extinguish

3.) Reset (pull out) emergency stop pushbutton

4.) Press the start pushbutton.

5.) Clear the fault on the MDS and Touch Screen Terminal.

6. Over-Length Detection

a. Provide over-length detection photocells at every baggage input in the system to detect bags that are too long.

b. Program the over-length measurement circuit to stop the conveyor if a preset bag length (adjustable in the PLC) is exceeded.

c. Provide jam indication signal at the MDS and Touch Screen Terminal.

d. Provide an oversize indicator lamp in the control station. This lamp may be the same unit as that for over-height detection. Illuminate the oversize indicator lamp in the control station if a preset bag length (adjustable) is exceeded.

e. Program the over-length circuit to require the following sequence to reset:

1.) Actuate associated E-Stop

2.) Clear the photocell by removing the over-length bag, the oversize indicator lamp shall extinguish

3.) Reset (pull out) emergency stop pushbutton

4.) Press the start pushbutton. This pushbutton may be the same unit as that for over height detection.

5.) Clear the fault on the MDS and Touch Screen Terminal.

7. Length Measurement for Accelerated/Delayed and Added Bag Tracking in EDS Matrices

a. Accelerated/Delayed Bag Tracking (Refer to PGDS version 5.0 Appendix D)

b. Added Bag Tracking(Refer to PGDS version 5.0 Appendix D)

8. Bag Tracking

a. After bags have been scanned and on exit from the level 1 device, their position shall be tracked by bag tracking photocells.

b. The tracking photocell shall be typically located at the head end of tracked conveyors.

c. All bag tracking photocells shall also be programmed to update the position of the bags and shall have diverter arming capability to cause bags to be diverted.

9. BHS Unknown Bag Jam

a. For sortation systems a BHS Unknown bag jam is defined as a jam that occurs when three (3) consecutive bags are sensed at a conveyor head end photocell and not detected at the next downstream photocell within a predetermined period.

b. For EDS security screening systems an EDS Unknown bag jam is defined as a jam that occurs when three (3) consecutive bags are sensed at a conveyor head end photocell and not detected at the next downstream photocell within a predetermined period.

c. All tracked conveyor subsystems shall incorporate BHS Unknown bag jam detection logic.

10. Merge and Priority Control

a. 45° Merges

1.) Merge windows shall be dynamic in that the control system establishes a window only upon indication that a bag has arrived at either the merge or through line induction photocell (i.e., a fixed window control system will not be acceptable). Merge windows shall be variable and shall be established on the basis of bags per minute (BPM) throughput requirements per subsystem with associated window spacing. Bag length shall be measured by the control photocells to adjust the merge window length as required.

2.) Photocells, timers and appropriate control stations shall be located on the conveyor equipment in 45° merge situations with functionality as follows. For all intents and purposes for this project, the conveyor line onto which bags are to be merged shall be referred to as the primary line, while the conveyor line from which bags are merged from shall be referred to as the secondary line:

a.) A photocell shall be located at the discharge end of the secondary line merge conveyor. This photocell shall have the functions of jam detection, head end sensing and priority control. The jam detection function of this photocell shall detect a jam at the merge point resulting from bags being transferred from the secondary line onto the primary line. When this occurs, both belts involved shall be stopped until the jam is cleared (along with other appropriate conveyors upstream that will cascade stop as necessary).

b.) All 45-degree merge conveyors are to be programmed in a run on demand mode and use energy management timers to stop. As a bag is transported towards the merge conveyor an auto- start photocell, located on the upstream conveyor, once blocked will actuate the start-up of the merge conveyor. If after 20 seconds (adjustable in the PLC) the auto-start photocell doesn't detect any baggage then the merge conveyor shall stop.

c.) Merge window logic in the PLC is used to monitor and track the flow of bags on the primary conveyor line upstream of the merge. The merge window logic shall use a photocell and timer to measure bag length in order to determine the required merge window for proper transfer onto the primary line. The merge window logic is used to track the position of bags and the space between the bags on the primary line. The head end photocell on the conveyor immediately upstream of the merge conveyor on the secondary line shall be used to measure the length of bags as they move onto the 45- degree merge. The PLC utilizes this length to calculate the bag window size required on the primary line to merge a bag into. If the required bag window is determined to be available on the primary line then the bag is not stopped and is merged onto the primary line. If the bag window is determined to be unavailable then the bag is stopped and held on the merge conveyor until the appropriate size window is detected on the primary line.

d.) The merging function shall be provided in two modes. Primary priority and reverse priority. In primary priority mode (to be considered normal mode of operation) bags on the primary conveyor line shall have priority over bags on the secondary conveyor line. The secondary line will have to wait for openings between bags on the primary line to be able to merge into. Priority control shall monitor the time in which the photocell on the primary line is being blocked, indicating that the appropriate merge window is being searched for.

e.) Reverse priority mode shall be actuated in two different cases. First, if the 45-degree merge conveyor is stopped with bags in queue upstream (to a point which will be determined in design review meetings based upon criteria such as but not limited to subsystem length and BPM requirements) then the secondary line is considered to be full and the reverse priority function shall be actuated for the period of time it takes to empty the secondary line of bags

from the point in which the reverse priority was actuated. Second, if a bag is on the 45-degree merge waiting for a window and an opening is not detected for 60 seconds (adjustable in the PLC) then reverse priority shall also be enabled. The primary line conveyor onto which bags are being merged shall be stopped, and all merge control functionality of the secondary line shall be disengaged to allow for continuous and uninterrupted baggage flow from the secondary onto the primary line for 60 seconds (adjustable in the PLC), thus purging the secondary line of bags. Upon completion the merging function will revert back to primary priority mode.

f.) In the event that there are multiple merges onto the mainline each merge should receive equal priority in order to prevent any one of the merges from not being able to discharge bags onto the mainline.

11. Auto Start

    a. Provide Auto Start photocells upstream of sections of transport conveyors not specifically controlled by START/STOP switches. The same photocell may control both Auto Start and Auto Stop circuits.

    b. Program Auto Start circuits to start a string of conveyors whenever an Auto Start photocell is interrupted.

    c. Before any conveyors may be started, audible start-up warning alarms shall be actuated, audible throughout the area to be affected by the starting of the conveyors. Activation of the alarms shall be through the PLCs. The horn shall sound and after a period of between 5 and 25 seconds (adjustable in the PLC) the conveyor subsystem shall start.

    d. Each conveyor in the subsystem shall be sequentially started from output to input point with an appropriate delay between each motor starter actuation as to ensure electrical power surges are minimized. The next sequence of conveyors controlled by Auto Start functionality shall start in a similar manner, triggered by baggage at a predetermined location within the line.

12. Auto Stop (Time-Out)

    a. Provide Auto Stop photocells upstream of sections of transport conveyors not specifically controlled by START/STOP switches. The same photocell may control both Auto Start and Auto Stop circuits.

    b. Program Auto Stop circuits to stop a string of conveyors if an Auto Stop photocell does not sense a bag for an adjustable time period (adjustable in the PLC).

    c. If a conveyor stops for any reason, reset the auto stop timer and hold until the conveyor restarts.

13. Indexing Control (Accumulation)

    a. Provide a photocell at the discharge end of each conveyor feeding an indexing conveyor.

    b. Program the indexing conveyor to run when the photocell is blocked and to stop when it is clear.

    c. Include a time delay so that the conveyor can be programmed to continue for a preset interval after a bag clears the photocell and is completely on the indexing conveyor.

14. HSPD Timing

    a. Provide a photocell at an appropriate distance upstream of each diverter with the center of the photocell

beam at a height of 2.5" or 3" above the top of the conveyor belt for HSPD timing/arming. The function of this photocell can also be combined with baggage tracking (not with jam or cascade functions)

b. Program the photocell function to ensure accurate HSPD bag contact; given bag size, belt speed, and HSPD cycling speed.

15. Fail Safe

a. Provide a redundant photocell arrangement an appropriate distance downstream of the suspect bag HSPD with the center of the photocell beam at a height of 2.5" or 3" above the top of the conveyor belt for failsafe monitoring. The function of this photocell can also be combined with baggage tracking (not with jam or cascade functions).

b. Program the photocell as described in Additional EDS Controls Functions below.

c. Coordinate the fault requirements and resets with the local TSA operational requirements.

d. Level 1 Decision Point Failsafe Locations

1.) The location of the failsafe functionality and the conveyors that are stopped as part of a Level 1 decision point failsafe fault conditions are as follows:

a.) CL1-01, CL2-01, CL3-01

e. Level 2 Decision Point Failsafe Locations

1.) The location of the failsafe functionality and the conveyors that are stopped as part of a Level 2 decision point failsafe fault conditions are as follows:

a.) CL4-01

f. When a failsafe fault is detected, the conveyors associated to that failsafe condition shall stop immediately. At a minimum, the conveyor where the failsafe fault is detected plus the next conveyor downstream shall stop.

C. Motor Overloads

1. Size the motor overload heaters not to exceed 115% of the full load amps as indicated on motor nameplate.

2. In the event of any subsystem motor drawing excess current, appropriate protection shall be provided to isolate supply to all subsystem elements. Either the single "motor overload" indicator on the affected MCP panels shall illuminate, or if individual "motor overload" indicators are specified for each drive then the effected drive indicator will illuminate.

3. Following rectification of the cause of the overload and resetting of the overload protection device in the motor control panel or motor control center as applicable, the system may be restarted by actuation of the "start" button, at which stage, the "motor overload" indicator shall be extinguished and normal control shall resume.

4. "Motor overload" fault conditions shall be reported both visually and audibly on the MDS or Touch Screen Terminal.

5. In the event of individual conveyor motor overloads, all upstream conveyors shall revert to cascade stop mode, while all downstream conveyors shall continue to run in normal mode of operations.

D. Jam Indication/Restart

1. Provide an Illuminated Amber Jam Light (in a common enclosure with an Emergency Stop pushbutton and green re-start pushbutton) adjacent to all jam detection photocells as follows:

   a. As a minimum, provide jam detection photocells and a jam indicator with a jam/restart/emergency stop control station in areas that have a relatively high frequency of jams. This shall include the discharge ends of all conveyors feeding onto power turns, at the bottom of incline and decline conveyors, at all merges for both the primary and secondary lines, opposite all diverters, and at any other location where experience indicates a potential jam point.

2. Illuminate the Jam Lamp when the jam detection photocell senses a jam condition.

3. Restart the conveyor and extinguish the E-Stop indicator lamp and MCP fault light only after the following sequence:

   a. Actuate (push in) Emergency Stop pushbutton (E-Stop indicator lamp goes on)

   b. Clear the jam

   c. The jam light shall “flash” (indicating the jam photocell has been cleared and the conveyor is ready for restart).

   d. Reset (pull out) emergency stop pushbutton

   e. Depress green “re-start” pushbutton (E-Stop indicator lamp and MCP fault light turns off and conveyors restart after warning alarm sequence)

4. Paint the control station enclosure with "Safety" yellow paint and label with the conveyor Item Designations of the conveyors being controlled in 1/2" high block letters. Jam detection reset control stations shall be placarded with the conveyor designations, which are being controlled.

5. In most cases the control stations shall be located adjacent to the conveyors under control and shall be accessible only to the personnel clearing the jam to avoid a subsystem being re-started in an unsafe condition (e.g. personnel on conveyor). Note that all such control stations shall be located on the catwalk side of conveyors so equipped with catwalks.

E. Start-Up Warning

1. Provide amber rotating beacons and audible horn alarms as start-up warnings in areas as specified.

2. Activate the beacon and the horn for an adjustable period of time prior to the start-up of the conveyor system. Ensure the start-up warning is of a sufficient duration as to comply with OSHA standards or local safety standards, whichever is more stringent.

3. Appropriate audible start-up warning alarms shall be provided at public areas such as ticket counter, curbside check in, and baggage input points.

F. Alarm Silence

1. Provide an ALARM SILENCE momentary contact pushbutton on the door of the MCP which, when depressed, shall silence the audible alarm. The design of the control circuitry shall be such that multiple faults shall always sound the associated fault warning alarm; i.e., if a jam condition has caused the alarm to have been sounded and the alarm has been silenced by the act fault but has not yet been corrected, a second fault occurring after the alarm has been silenced shall again cause the fault warning alarm to sound.

2. Do not extinguish the illuminated fault indicator until the fault has been corrected.

G. Emergency Stop Pushbuttons

1. Locate Pushbuttons as required to ensure that operating and maintenance personnel can easily and quickly reach an Emergency Stop Pushbutton from anywhere in the system. In addition, ensure that Emergency Stop Pushbuttons are installed at the following locations:

   a. Around the perimeter of all make-up devices.

   b. At each end of load/unload conveyors.

   c. Along lengths of conveyors, whether running at floor level or overhead mounted on conveyor support legs or building columns a maximum of 50' apart.

   d. In each jam indication enclosure.

2. Wire all Emergency Stop pushbuttons for a single emergency stop zone in series with the coils of one or more emergency stop relays. Size the normally open contacts of the relays in series with the power source of the PLC output module(s) controlling the conveyors in the emergency stop zone. The PLC shall not be required to remove power from the associated conveyors for an emergency stop condition.

3. Upon actuation of an Emergency Stop pushbutton, stop the associated conveyors in the emergency stop zone, illuminate the lamp in the head of the pushbutton in a steady burning mode, and illuminate the red emergency stop fault light at the MCP.

4. Restart the conveyors and extinguish the indicator lamp and MCP fault light only after the following sequence:

   a. Reset (pull out) emergency stop pushbutton

   b. Depress the green “Re-Start” pushbutton (E-Stop indicator lamp and MCP fault light turns off and conveyors restart after warning alarm sequence)

5. When a jam has been detected and an Emergency Stop pushbutton in the jam indication enclosure is activated, follow the same sequence of stopping the conveyors and illuminating the light in the head of the pushbutton, but do not activate the fault warning circuits at the MCP.

6. When the normal re-start switch for the conveyor is actuated, extinguish all emergency stop pushbutton lamps within the subsystem associated with that particular emergency stop actuation, actuate the start-up warning alarms and, after a delay, start all conveyors in the subsystem.

7. Note that the activation of an Emergency Stop pushbutton switch must not close any powered fire/security door within the area of control of the Emergency Stop switch.

8. "E-Stop" conditions shall be reported both visually and audibly on the MDS or Touch Screen Terminal.

H. Control Stop/Start Crossover Control Stations

1. Provide Control Stop/Start control stations at all maintenance catwalk crossovers (existing and new within the bagroom space) and makeup device crossovers to ensure that TSA operating and BHS maintenance personnel can easily and safely reach the EDS machines and BHS equipment for scheduled maintenance (such as IQ Bag Testing) as well as in case of jams or faults at the EDS devices, or along the conveyor lines / make-up device for scheduled maintenance on the conveyor equipment, including make-up devices.

2. Each Control Stop/Start control station shall have a two device control station installed adjacent to the crossover on both sides of the conveyor / make up device (a total of two control stations per crossover):

   a. One device of the control station shall be a red momentary contact Stop pushbutton switch to stop the associated subsystem conveyor immediately underneath the crossover to allow personnel to crossover the conveyor / make up device while the conveyor / make-up device is stopped. Upstream conveyors with baggage arriving at their head end photocell shall cascade stop while the crossover conveyor / make-up device is under a Control Stop condition.

   b. One device of the control station shall be a green momentary contact Start pushbutton switch to start the associated subsystem conveyor immediately underneath the crossover after the personnel have crossed over the conveyor while the conveyor is stopped. Note that the conveyor / make-up device under the crossover shall not start if the conveyor is stopped for another fault condition (such as cascade stopped, jammed, or emergency stopped).

3. Upon actuation of a Control Stop pushbutton, there shall be an indication on the MDS that the conveyor / make-up device has been stopped for greater than thirty (30) seconds if the associated Control Start pushbutton has not been pressed to start the conveyor / make-up device after the personnel have crossed over. This shall notify the control room operators that the subsystem has a stopped conveyor / make-up device that requires activation of one of the Control Start pushbuttons located at the crossover.

I. Security/Fire Door

1. Provide a photocell to detect bags under the security/fire door.

2. The door is to be equipped with either a limit, photocell or proximity switch mounted in such a manner so that the "fully open" position of the door is sensed. If the door is sensed by the limit or proximity switch not be in the fully open position, the associated conveyor shall be stopped if running or shall not be permitted to start if the conveyor is not already running. Note that this limit or proximity switch is in addition to those limit or proximity switches provided with the door operator if the door is powered.

3. The door is also to be equipped with a limit, photocell or proximity switch mounted in such a manner so that the "fully closed" position of the door is sensed. If the door is sensed by the limit or proximity switch not be in the fully closed position, annunciation shall be sent to the system fault monitoring system for rectification of the problem. Note that this limit switch is in addition to those limit or proximity switches provided with the door operator if the door is powered.

4. Interface and test the door interface with the building fire/security system for door open/closed status.

5. Program the security/fire door to operate as follows:

   a. Normal Start/Stop

      1.) Start: Open the security/fire door immediately. Ticket counter and curbside inputs require card swipe permissive start. PLC to provide Building Security System with “Running status”.

2.) If the Door is a Fire/Security Door Stop:

a.) Run the feeding conveyor for one minute, stop the conveyor and lower the security/fire door. PLC to provide Building Security System with "Door Closed" status.

b.) If a bag is detected under the door via the door clear photocell or the door pressure switch, continue to run the conveyors until the photocell is clear and reattempt to close the door. The door should continue attempting to close, however an alarm should be displayed on the fault monitoring system that the door has failed to close after the third attempt.

3.) If the Door is a Fire Door Only Stop:

a.) The fire door shall remain in the open position when the conveyor line stops due to either Manual or Auto Stop controls functionality. The fire door shall close only upon detection of fire/smoke per the appropriate interface with the building fire/security system.

b.) Upon detection of fire/smoke, if an obstruction is not detected within the door's right-of-way, stop the conveyors and lower the fire door. PLC to provide Building Security System with "Door Closed" status.

c.) If an obstruction is detected under the door via the door clear photocell, continue to run the conveyors until the door clear photocell is clear and reattempt to close the door. The door should continue attempting to close, however an alarm should be displayed on the fault monitoring system that the door has failed to close after the third attempt.

b. Upon fire detection:

1.) Close the dry contact

2.) If no bag is detected under the door by either the clear photocell or the door pressure switch, stop all conveyors and close the door.

3.) If a bag is detected under the door by either the door clear photocell or the door pressure switch, run the conveyors until the photocell is clear and immediately stop the upstream and downstream conveyors to allow the door to close. If the door is unable to close upon detection of a fire signal or system stop signal an alarm shall be displayed on the fault monitoring system that the door has failed to close.

c. Emergency Power:

1.) The fire doors and respective upstream and downstream conveyors shall be supplied with both normal and emergency power supply. Reference "ELECTRICAL & CONTROLS SPECIAL CONSIDERATIONS" paragraph related to "emergency power" for additional requirements.

d. A fire door control station shall be installed adjacent to each fire door for maintenance personnel use only (not accessible from the public side) which shall contain the following:

1.) Maintenance/Auto Switch

2.) Emergency Stop

3.) Start Pushbutton

4.) Door Open Pushbutton

5.) Door Closed Pushbutton

e. When the Maintenance/Auto is in the Maintenance position, the door open and door-closed switches are active. Related conveyor systems are not active when in the maintenance mode. Activation of the ticket counter (or curbside) security card swipe is not required when in the maintenance mode.

f. All powered security/fire doors must be equipped with a manual release mechanism to permit the disengagement of the door drive unit so that the door can be either raised or lowered.

J. Fault Warning Alarm

1. Provide an audible/visual alarm on the MCP controlling the system.

2. Activate the alarm and one of the following indicator lights whenever any fault has caused a section of conveyor to stop or prevent it from starting:

Condition	Color
Jam	Amber
Motor Overload	Blue
Emergency Stop	Red

K. High Speed Paddle Diverter

1. Provide photocells at strategic upstream locations to synchronize HSPD operation with bag position.

2. Provide a sensor at the "home" position of the HSPD to stop the sort conveyor if the HSPD does not return to the home position within a preset time after it has started its cycle. Report the fault condition to the MDS or Touch Screen Terminal. The sensor is to be of the shaft encoder type with proximity detector controlled by a Warner Electronic Controller (or approved equivalent) so that the “at home” paddle position shall always be the same.

3. Provide each HSPD with one disconnect switch to control both the clutch/brake and motor (if applicable).

4. Provide a photocell on the receiving conveyor spur to which the HSPD discharges to report to the control system that a bag has successfully transferred and that no jam has occurred. If a jam is detected, inhibit further diverter operation and report the fault condition to the MDS or Touch Screen Terminal.

5. Each HSPD feeding a conveyor spur shall have a four device control station installed adjacent to the photocell or on the housing of the HSPD for maintenance personnel operation of the HSPD:

a. One device of the control station shall be a green momentary contact Reset/Start pushbutton switch to allow for reset of the associated subsystem conveyors and energizing of the HSPD motor following a jam condition and subsequent clearing of the photocell at the charge end of the associated receiving chute, opposite the HSPD.

b. One device of the control station shall be an Illuminated Amber Jam Indicator Lamp to signal a jam condition of the photocell at the charge end of the associated receiving chute, opposite the HSPD.

c. One device of the control station shall be Maintained Contact Illuminated Red Mushroom Head

Emergency Stop type switch to stop the associated subsystem conveyors and energizing of the HSPD motor.

d. One device of the control station shall be Auto/Cycle momentary switch. This will allow for the manual cycling of the HSPD for testing purposes

L. Motor Safety Disconnect (MSD)

1. Provide Motor Safety Disconnect Switches as described in part 2 of this specification.

2. Rotation of the MSD to the off position shall cause the conveyor or other component to stop and appropriate alarm/statuses to be displayed on the MDS workstation as described in part 2 of this specification.

3. Rotation of the MSD to the On position shall allow the conveyor or other component to restart (with appropriate startup alarm) only if:

a. The conveyor does not pass through a wall or floor penetration.

b. The conveyor is not a public area conveyor.

M. Breakaway End Cap Safety Guard Interlock

1. Provide a failsafe breakaway end cap safety guard interlock on all run out/unload conveyors which shall immediately stop the conveyor and prevent injury to personnel and damage to baggage.

2. Activation of the end cap safety guard interlock shall be displayed on the MDS fault monitoring system.

3. When resetting the tripped end cap interlock, the operator shall go through the normal startup procedure following all safety procedures described in these specifications.

N. Interlocks

1. Provide Failsafe interlocks and limits in the system to ensure safe operation. Assume responsibility for the integration of all interlocks and limits that may be necessitated by the characteristics of the elements selected for combination into a total system. Interlocks and limits shall be included for the protection of personnel, equipment and baggage, and in the performance of the operational functions specified for the subsystem and elements comprising the system.

2. Provide electrical interlocks between the various conveyors in a subsystem to inhibit a conveyor from discharging baggage onto a stopped conveyor. Interlocks shall be cascaded from the last conveyor in a train to the first. This provision shall apply to all subsystems even if two different suppliers provide the equipment under separate contract.

3. Provide warning signals, which are activated automatically upon start-up, where appropriate. Flashing lights shall be visible from all points in the vicinity of the equipment concerned. Alarms shall be audible within the equipment vicinity and each alarm in the system must be distinctive from any sound within the hearing range, and shall not be unduly annoying to working personnel and shall comply with all applicable codes and regulations. Although not specifically mentioned in the control subsystem descriptions all automatic start-up functions shall be preceded with appropriate audible and visual indicators unless otherwise specified.

4. Inhibit further equipment action upon sensor failure should personnel safety be in doubt. Inform the involved equipment operator or maintenance personnel of such failure through the MDS, Touch Screen Terminal. Sensors shall be selected and positioned such that false signals from debris, ambient light, and personnel

movement do not cause activation.

5. Coordinate the facility fire zones with the Architect and to add a dry contact to the subsystems controls, so that if a fire is detected the system will perform the necessary shutdown. This feature shall be provided to the BHS control system, regardless if the system includes a fire door or not.

O. E-Stop Lanyards (ESL)

1. Provide e-stop control lanyards in non-public operational areas as detailed on the contract drawings (CBRA Area).

2. Activation of the e-stop control shall cause the related conveyor to stop for as long as the control is activated.

3. The e-stop lanyard cable shall be color coded – Red

4. Support the installation of the lanyard on stanchions, if provided.

P. Swing Down Ladder Advisory/Warning Beacon

1. Provide a failsafe interlock with associated swing down ladder to provide:

a. An Amber rotating beacon as a swing down ladder warning in the vicinity of each swing down ladder, which will be visible to tug and cart drivers entering the immediate area of the respective ladder.

b. Activation of the beacon shall occur as the swing down ladder is traveling from the full up position to the full down position and be maintained while in the down position.

c. Deactivation of the beacon will occur when the swing down ladder is in the full up position.

Q. Vertical Sorter Conveyors

1. The VSU unit shall be comprised of three self-contained conveyors and shall be controlled by the respective subsystems PLC and local control station, as described below.

2. Provide photocells at strategic upstream locations to synchronize the VSU operation with bag position.

3. Provide the necessary number of proximity sensors for the control of the unit and to confirm the position of the switch conveyor. If the VSU switch conveyor does not reach the appropriate position within a preset time after it has started its cycle, report the fault condition to the MDS. The sensor is to be of the shaft encoder type with proximity detector controlled by a Warner Electronic Controller (or approved equivalent) so that the switch conveyor position shall always be the same.

4. The Vertical Sorter Conveyors shall be able to operate in automatic and manual mode, which shall be determined through the local selector switch that will be installed on the VSU control station. When the selector switch is set in the Automatic mode (i.e., normal mode of operation), the PLC control logic shall issue the switch conveyor commands based on the assigned destination of the baggage. When the selector switch is set in the Maintenance mode, for maintenance and trouble-shooting purposes, the PLC controls shall be disabled and the control of the VSU shall be controlled through the local hardwired UP – DOWN pushbuttons; in this regard, the VSU belts shall be controlled by the FORWARD or REVERSE pushbuttons.

5. Provide a photocell on the receiving conveyor spur to which the VSU discharges to report to the control system that a bag has successfully transferred and that no jam has occurred. If a jam is detected, inhibit

further operation of the unit and report the fault condition to the MDS.

6. Each VSU feeding a downstream conveyor shall have an eight (8) device control station installed adjacent to or on the housing of the VSU for maintenance personnel's use to troubleshoot faults and for purging purposes of the VSU:

   a. One device of the Control Station shall be a two-position selector switch for use by maintenance personnel only. Turning the Auto/Maintenance switch to the Maintenance position stops the conveyors and enables the VSU manual controls for maneuvering the conveyors to the up or down position. Returning the selector switch to the Automatic position enables the normal operation of the VSU.

   b. Two pushbutton control devices on the control station shall be provided for the Manual UP – DOWN Control of the switch conveyor. Pushing and holding in place the UP or DOWN pushbutton shall activate the VSU in the relative direction. The unit shall automatically stop when reaching the raised or lowered proximity switch, which shall confirm the position of the switch conveyor. Releasing the UP or DOWN pushbutton shall stop the movement of the switch conveyor.

   c. A second set of pushbutton control devices shall be provided on the control station for the FORWARD and REVERSE control of the VSU belts, which the unit is under the control of the maintenance mode.

   d. One device of the control station shall be a green momentary contact Reset/Re-Start pushbutton switch to allow for reset of the VSU, with its associated subsystem conveyors, and energizing of the VSU motor following a jam or fault condition and subsequent clearing of this condition, at any juncture of the VSU, via the related Jam Reset procedures. Pressing this pushbutton while the conveyors are Timed-out will not start the subsystem.

   e. One device of the control station shall be an Illuminated Amber Jam/Fault Indicator Lamp to signal jam conditions and raising-lowering-positioning faults at any juncture point of the VSU unit. When a fault is detected the manual controls listed above may be used to clear baggage from the unit. Aligning the VSU unit to a raised or lowered limit and pressing the Reset/Restart pushbutton clears the fault condition.

   f. One device of the control station shall be Maintained Contact Illuminated Red Mushroom Head Emergency Stop type switch to stop the associated subsystem conveyors and energizing of the VSU motor.

3.07 ELECTRICAL & CONTROLS SPECIAL CONSIDERATIONS

A. Power Source

1. The electrical equipment and PLC control systems provided shall be compatible with, and operate reliably and effectively with, the normal electrical supply typically available at airport locations. The equipment shall not be unduly sensitive to fluctuations in supply voltage which may typically vary by plus or minus ten percent (10%) of nominal values.

2. Provide necessary electrical supply filters, conditioners, and regulators for all equipment, which cannot meet the specifications stipulated.

B. Emergency Power

1. Normal and emergency power shall be provided to all fire doors and their immediate upstream and downstream conveyors with all associated controls in order to provide a positive means for preventing obstructions (i.e. baggage) from interfering with the operation of the fire doors in accordance with the fire

door mode of operation upon detection of heat, smoke, or fire elsewhere in the specification. The remaining conveyors and related equipment of the respective subsystem are to be controlled and power by normal building power supply.

2. To accomplish emergency power supply, the following shall be provided:

   a. Emergency electrical power feed to a main disconnect box in the associated MCP area (by others).

   b. Wiring from the main disconnect box to a distribution panel (by BHS Contractor).

   c. Wiring from the distribution panel to the appropriate MCP(s) housing the subsystem components responsible for the fire door/associated conveyor operation (by BHS Contractor).

3. Functional Intent

   a. The fire doors and their immediate upstream and downstream conveyors with all associated controls are to be normally powered by normal building power. In the event of loss of building power, the power-switching device shall detect this loss and apply the emergency power to the fire doors and their associated upstream and downstream conveyors and controls to assure the fire door pathway is clear prior to stoppage of conveyors and closure of the doors.

   b. The BHS Contractor shall provide the power-switching device and associated controls.

C. Outbound System input conveyor "Manual Start" Sequence

1. Each Outbound BHS subsystem shall be enabled via a separate "System Start" function key operated switch, located on the Workstation in the Control Room or by means of suitable computer dialogue at the computer keyboard with password protection.

2. Each check-in subsystem shall be initiated to start via a local "Subsystem Start" Security Card Swipe Device (or keyswitch). Activation of the security card swipe (or keyswitch) shall supply power to the respective control station, located at the associated conveyor segment area. Actuation of the Subsystem's Illuminated Start pushbutton will energize the respective Visual/Audible warning alarms along the conveyor line, both in the public space and air side, for 10 seconds (adjustable) - e.g., check-in area, input conveyor respective sub-system ceiling conveyor right-of-way catwalks and the work aisle(s) of the make-up devices. The Fire/security doors shall open while the "Run" 10 second alarm sounds and flashes. After the 10 (ten) second "Run" alarm period and when the Fire/Security doors are fully opened, the check-in collection conveyor(s) shall start. The downstream transport conveyors and make up devices shall start via an auto-start function. The downstream transport conveyors shall all start sequentially from the output to the input with an appropriate delay between each motor starter actuation to ensure electrical power surges are minimized. The start-up warning signal at the slope pallet/flat plate make-up device or tilt tray sorter shall sound only if the device(s) are not already running.

3. The subsystem security doors shall open and close consistent with the respective subsystem start-up and shut-down sequence. The subsystem fire doors shall close only upon receiving a signal from the Fire Alarm System for closure and open upon normal start-up sequence, otherwise they shall remain open at all times.

D. CBRA Re-Input Line, CBRA clear line, and Outbound Transfer Line "Manual Start" Sequence

1. Each CBRA Re-Input Line, CBRA clear line, and Transfer Line subsystem shall be initiated to start via a local "Subsystem Start" pushbutton. Actuation of the Subsystem's Start pushbutton will energize the respective Visual/Audible warning alarms along the conveyor line, both in the CBRA space and air side, for 10 seconds (adjustable) - e.g. transfer or CBRA clear / re-input conveyor respective subsystem ceiling

conveyor right-of-way catwalks. The Fire/security doors shall open while the "Run" 10 second alarm sounds and flashes. After the 10 (ten) second "Run" alarm period and when the Fire/Security doors are fully opened, the input/load conveyor(s) shall start. The downstream transport conveyors shall start via an auto-start function. The downstream transport conveyors shall all start sequentially from the output to the input with an appropriate delay between each motor starter actuation to ensure electrical power surges are minimized. The start-up warning signal at the make-up device shall sound only if the device(s) are not already running.

E. System Ready Indication

1. A green indicator light, labeled SYSTEM READY and located on the door of each MCP shall serve to indicate that the devices under its control are ready to operate upon receipt of a START signal, from the BHS control system and local card swipe device. To accomplish this, the light shall illuminate under the following conditions, per the respective subsystem:

a. Power is applied to the MCP.

b. The local conveyor motor and Fire/Security door disconnect switches are in the "ON" position.

c. All Emergency Stop pushbuttons are reset.

d. No Motor overloads are tripped.

e. No Jam conditions are indicated

f. No oversize conditions are indicated.

g. All HSPDs and vertical sorters are in the HOME position.

h. No faults are indicated on the MDS, Touch Screen Terminal or MCP.

F. Make-up Control Stations

1. Make Up Device

a. Provide Four "Start" Pushbutton control stations (two on the each side of the flat plate make-up device) for Manual Start-up operation of the make-up device; In case the flat plate make-up device times-out before all baggage has been sorted, activation of any start button on the flat plate make-up device shall cause the device to run for an additional twenty (20) minutes (adjustable) without the feed conveyors operating.

b. Additionally, provide two “Control Stop / Start” Pushbutton control stations per make up device crossover (one control station on each side of the crossover) as specified elsewhere in the document.

3.08 BHS DETAILED CONTROL DESCRIPTIONS/REQUIREMENTS

A. General Design Requirements

1. The following subsystem control descriptions apply the referenced components and circuits to the operational aspect of the system and specify the actual elements under their control.

2. By means of suitable computer dialogue at the computer keyboard in the Computer/Control Room, (or by "Mouse" manipulation and using pull-down menus) it shall be possible to make changes to baggage flow in

response to a variety of conditions such as:

a. Jams

b. Equipment Failure

c. Conveyor full condition

3. In each case an operator, having access to the proper passwords, as an example, will be able to:

a. Activate a HSPD and set it to operate either continuously or in an alternating sequence.

b. Shut down a HSPD or conveyor.

c. Set up alternative flow paths, for instance, to bypass a defective section of conveyor, or similar.

d. Set up default sort make-up devices, for example, should a make-up device fail in the outbound bagroom; assign another make-up device within the bagroom to allow transfer of baggage.

4. Reference the Contract Drawings for conveyor equipment power distribution and subsystem indication. Location for each of the new MCPs is referenced on the BHS Partial Plan and Control Plan Drawings. Power distribution point (PDP) locations for the new MCPs are at the immediate area of the respective MCP as shown on the BHS Partial Plans.

5. The Control Functions associated with the outbound sort system and each of the ticket counter check-in, curbside lines are described in the following paragraphs. Apply the generic subsystem/conveyor line functional description to the detail design of each electrical subsystem of similar type.

6. Provide software for the control system reflecting the sequence of operation for each subsystem as described in the following paragraphs. The paragraphs describe the particular subsystem specific controls that will be required in addition to those standard controls (i.e., Jam Detection, Jam Reset, Cascade Stop, Oversize Detection, Merge Control, Auto Start, Auto-Stop, Emergency Stop, and all other controls functionality described elsewhere in this document) that will be required for each subsystem (described elsewhere in this document).

7. Provide two (2) dry contacts to the subsystem controls, within the respective Master PLC cabinet, as specified elsewhere in this document, so that in the event that an appropriate signal is sent from the Fire Alarm system (as coordinated with the fire alarm system), the conveyor system shall shut down and the associated fire doors shall closedown.

B. Temporary BHS Conditions

1. General

a. As part of the sequenced implementation the BHS shall be provided with interim / temporary conveyors as illustrated in the contract drawings.

b. Temporary MCPs shall also be provided as indicated in the power distribution summary and accompanying BHS drawings.

c. For the interim BHS conditions, provide a Junction Box for each subsystem at the interface junction point between existing conveyor segments and temporary to provide the required termination between

the existing conveyor segment field components and the temporary and/or existing MCPs to permit the sequenced implementation of the BHS (e.g., clearing, re-routing and demolition of conveyor right-of-ways and associated conduits). Splice the existing wiring within the new Junction Boxes (segregating AC wiring from DC wiring), using appropriate screw connection terminal blocks, as specified elsewhere in this document for all wiring within the affected conduits. The ends of all wire strands (both new and existing splice points) shall be soldered (i.e., tinning the wire), to reduce the chance of corrosion of the wires and to assure proper wire connections at the terminal strips. Use Allen-Bradley "CA1L" terminal blocks or approved equal for all wire splices related to this work. Label/tag all wires at the Junction Box splice points with "Machine" printed identification numbers at both ends of the wire. Tag method shall be of the sleeve or other permanent type submitted to and approved by the City of El Paso. The use of multiple tags to create a single tag is not acceptable.

2. Control Equipment Components

   a. The minimum number of control stations on the temporary conveyor lines during the interim conditions shall be similar to the existing conditions. If additional stations are required to comply with the specification and local requirements, they shall be added at no additional cost to the project. All interim and existing relocated Jam Reset and Emergency Stop Control Stations shall be located on the maintenance catwalk side and shall be accessible, as coordinated with the City of El Paso.

3. Control Functions

   a. All control functions for the existing subsystem modifications, during the interim conditions, shall be similar to the existing conditions. Where applicable, if existing controls functionality does not include similar programming as that required by the interim conditions, apply the generic control functions that are specified elsewhere in this document for the existing reconfigured conveyor lines, such as the existing modified Ticket Counter Lines, Curbside Lines, and Outbound Oversize lines. Prepare software for the modified conveyor line's control systems reflecting the existing sequence of operation and functionality for each subsystem. The existing system Operations and Maintenance Manuals (Copies of the O&M manuals can be obtained from the City of El Paso) describe the particular existing subsystem specific controls in addition to the controls (i.e., Jam Detection, Jam Reset, Cascade Stop, Oversize Detection, Merge Control, Auto Start, Auto-Stop, Emergency Stop, etc.) that will be required as part of the interim conditions for each subsystem.

C. Ticket Counter Subsystems

1. General

   a. The outbound ticket counter and curbside system consist of the following subsystems:

      1.) TC1, TC2, TC3, TC4, TC5 and CS4

   b. All fault annunciation and status reporting for the outbound ticket counter conveyor subsystems (new and reworked existing) shall be displayed both graphically and in text on the workstation MDS system or Touch Screen Terminal.

   c. The following describes the TC4 ticket counter line sequence of operation; however, all other ticket counter conveyor lines will operate in a similar manner.

      1.) Provide security/fire doors and draft curtains.

      2.) The Check-in Ticket Counter and Outbound Transport Line portion of the subsystem consists of conveyor segments TC4-01 through TC4-09 for transport of originating outbound baggage to Main

Line 1.

2. Control Equipment Components

a. A minimum of two control stations shall be provided for Start/Stop control of each ticket counter conveyor lines. One station shall be located on the wall, adjacent to the charge end of the TC4-01 conveyor, the second will also be mounted on the wall, adjacent to the fire/security door. The location of these control stations shall be coordinated with the City of El Paso or its representative.

1.) The control station located at the charge end of TC4-01 shall include the following operators/control devices:

a.) Lighted " Start" Pushbutton

b.) Lighted Push-Pull (Lockable) E-Stop

c.) "System Stop" Pushbutton

d.) Lighted “Jam” Indicator

e.) Sonalert Warning Device

2.) The station at the TC4-03 conveyor shall include the following operators/control devices:

a.) Lighted "Start" Pushbutton

b.) "System Stop" Pushbutton

c.) Lighted Push-Pull (Lockable) E-Stop

d.) Oversize Reset Illuminated Pushbutton Light.

e.) Lighted “Jam” Indicator

f.) Sonalert Warning Device

g.) Card Swipe (provided by others)

b. Ticket Counter Conveyor Start Sequence:

1.) The conveyor line's local "Subsystem Start" shall be enabled via the "System Start" function, from the Master Control Room's BHS Workstation cabinet. This function shall allow the local "Subsystem Start" security card swipe to supply power to the respective TC4 line Start/Stop control stations.

a.) Automatic System Cascade Start:

(1.) The conveyor segments downstream of TC4-01 shall start via an "Auto Start" sequence. Provide auto start photocells upstream of sections of outbound transport conveyors, not specifically controlled by the "Start/Stop" control station. Program the auto start circuit to start conveyor segments TC4-01 through TC4-09, Main line ML1, makeup devices, main sortation lines (if not already running) whenever the auto start photocell is interrupted.

The downstream TC4 transport conveyors shall all start sequentially from the output to the input with an appropriate delay between each motor starter actuation to ensure electrical power surges are minimized.

b.) Automatic System Cascade Stop:

(1.) The conveyor segments downstream of TC4-01 through TC4-09 shall stop via an "Auto Stop" sequence. Provide auto stop photocells upstream of sections of outbound transport conveyors, not specifically controlled by the "Start/Stop" control station. Program the auto stop circuit to stop conveyor segments TC4-09 through TC4-01 whenever the auto stop photocell does not sense a bag for 5 to 30 minutes (adjustable). The same photocell may control both "Auto Start" and "Auto Stop" functions.

c.) Manual Stop:

(1.) Depressing the "Stop" pushbutton on any of the Ticket Counter Control Stations shall stop conveyors TC4-01 through TC4-09 and close the Fire/security door (if the Door Clear Photocells are not blocked); conveyor segments TC4-03 through TC4-09 shall run for a predetermined period to clear all bags on the conveyor segments, prior to the stoppage of the conveyor segments and closure of the door.

d.) Start-up alarms and fault alarms shall be located as required, along the outbound line and sort pier/make-up device area. Start-up and Fault Warning Alarm(s) location and function shall be consistent with the specified requirements indicated elsewhere in this document.

e.) Jam Reset and Emergency stop control station(s) location and function shall be consistent with the specified requirements indicated elsewhere in this document. All Jam Reset and Emergency stop stations associated with the TC4 line's outbound transport conveyors in the departures floor level ceiling space shall be located adjacent to each conveyor drive on the maintenance catwalk side, so that they are accessible by maintenance personnel.

f.) The Ticket Counter conveyors shall be activated by the security card swipe. This action shall supply power to the pushbutton control stations located at the Ticket Counter area. Pressing a “Start” pushbutton on any ticket counter control station shall energize the TC4 Start-up alarm(s) in the check-in area, along the outbound transport line and the bagroom for 10 seconds (adjustable). The start-up alarms in the bagroom area shall sound only if the make-up’s units are not already running. The Fire/Security door shall open while the "Run" 10-second start-up alarm sounds and flashes. After the 10 second "Run" alarm period and when the Fire/Security door is fully opened, the ticket counter check-in conveyors TC4-01 through TC4-09 shall start.

3. Other Control Functions:

a. Control Functions associated with the conveyor line's Fire/Security Door operation, Cascade Stop, Jam Detection/Restart, Oversize Detection/restart, Emergency Stop/Reset, Motor Control Panels, Motor Overload conditions and respective Alarm Silence function(s) shall be compliant with the specified requirements described elsewhere in this document.

b. Flash the Ticket Counter (Curbside) Start Pushbutton “Green light” when the respective ticket counter conveyor subsystem has cascaded back to the load belt. This will notify the ticket counter/curbside agent that a jam/fault has occurred in the subsystem

c. Merge Control functions associated with any of the ticket counter conveyor lines' 45 degree merge and

mainline conveyors shall be compliant with the specified requirements described elsewhere in this document.

D. Curbside Subsystems

1. General

a. The outbound curbside system consist of the following subsystems:

1.) CS4-01/12

2. Control Equipment Components

a. One control station shall be provided for Start/Stop control the curbside take-away conveyor line. The station shall be located on the wall, adjacent to the discharge end of the CS4-01 conveyor. The location of this control station shall be coordinated with the City of El Paso or its representative.

1.) The station at the discharge end of the CS4-01 conveyor shall include the following operators/control devices:

a.) Lighted "Start" Pushbutton

b.) "System Stop" Pushbutton

c.) Lighted Push-Pull (Lockable) E-Stop

d.) Oversize Reset Illuminated Pushbutton Light.

e.) Lighted “Jam” Indicator

f.) Sonalert Warning Device

g.) Card Swipe (provided by others)

2.) Activation of the start pushbutton will cause the downstream CS4-01 conveyors to all start sequentially from the output (merge) to the input CS4-01 with an appropriate delay between each motor actuation to ensure electrical power surges are minimized.

3.) Automatic System Cascade Stop:

a.) The conveyor segments downstream of CS4-01 through to the merge shall stop via an "Auto Stop" sequence. Program the auto stop circuit to stop conveyor segments CS4-01 through to the merge whenever the auto stop photocell does not sense a bag for 5 to 30 minutes (adjustable).

4.) Manual Stop:

a.) Depressing the "Stop" pushbutton on any of the Curbside Control Stations shall stop conveyors CS4-01 through CS4-12 and close the Security Door (if the Door Clear Photocells are not blocked); conveyor segments CS4-01 through to the merge shall run for a predetermined period to clear all bags on the conveyor segments.

5.) Start-up alarms and fault alarms shall be located as required, along the outbound line and sort pier device area. Start-up and Fault Warning Alarm(s) location and function shall be consistent with the specified requirements indicated elsewhere in this document.

6.) Jam Reset and Emergency stop control station(s) location and function shall be consistent with the specified requirements indicated elsewhere in this document. All Jam Reset and Emergency stop stations associated with the curbside line's outbound transport conveyors in the ceiling space shall be located adjacent to each conveyor drive on the maintenance catwalk side, so that they are accessible by maintenance personnel.

3. Other Control Functions:

a. Control Functions associated with the conveyor line's Security Door operation, Cascade Stop, Jam Detection/Restart, Oversize Detection/restart, Emergency Stop/Reset, Motor Control Panels, Motor Overload conditions and respective Alarm Silence function(s) shall be compliant with the specified requirements described elsewhere in this document.

b. Flash the Curbside Start Pushbutton “Green light” when the respective curbside conveyor subsystem has cascaded back to the load belt. This will notify the curbside agent that a jam/fault has occurred in the subsystem.

c. Merge Control functions associated with any of the curbside conveyor lines' 45 degree merge shall be compliant with the specified requirements described elsewhere in this document.

E. Security Shunt Line (SS1) Subsystems

1. General

a. As noted elsewhere in this specification, to accommodate the specified In-Line EDS layout, the new outbound BHS shall be configured with a new TC1, TC2, TC3, TC4, TC5 and CS4 subsystems merging into a single Main Line ML1 to transport to the Security Feed 1 line. All bags on the ML1 line will then pass through a combined ATR/BMA. It is at this point the ML1 subsystem becomes the Security Feed Line SF1 which feeds and equally distributes all originating bags from their respective input location to one of three Security Shunt Lines (SS1, SS2 and SS3) and then to three (3) Level-1 EDS machines and Out of Gauge line for security screening and subsequent processing for outbound baggage make-up area.

b. Originating bags dimensioned by the combined ATR/BMA and determined to be Out-of-Gauge will diverted to the OG1 line for conveyance to the CBRA.

c. All fault annunciation and status reporting for the main outbound transport lines shall be displayed both graphically and in text on the centralized MDS, respective Touch Screen Terminal and associated Satellite workstation.

2. Control Equipment Components

a. Provide all the necessary control stations with their respective control devices and functions along the ML1 and SF1 conveyor lines to accommodate the requirements relating to Jam Reset Control Function, Emergency Stop Control/Reset and High-Speed Paddle Diverter operation.

b. Jam Reset and Emergency stop control station(s) location and function shall be consistent with the specified requirements indicated elsewhere in this document. All Jam Reset and Emergency stop stations associated with the ML1 and SF1 conveyors shall be located adjacent to each conveyor drive on the maintenance side, so that they are accessible by maintenance personnel.

3. Control Functions

   a. There will be no manual start/stop controls for the conveyors in these subsystems. All conveyors shall operate by means of auto-start/stop circuits.

   b. Automatic System Cascade Start:

      1.) The normal start-up operations of the ML1 and SF1 subsystems shall be governed by an auto-start circuit and shall be controlled by separate photocells; located on each input line (i.e., TC1 through TC5, and CS4 subsystems). The photocells shall be located far enough upstream of each input line, to allow the outbound transport subsystem conveyors to come up to speed before baggage arrives. When a bag is detected at the input line's photocell(s), the ML1 and SF1 conveyors shall start (if not already running) sequentially from the output to the input with an appropriate delay between each motor starter actuation to ensure electrical power surges are minimized.

      2.) Start-up alarms and fault alarms shall be located as required, along the conveyor line(s), as specified elsewhere in this specification. Start-up and Fault Warning Alarm(s) location and function shall be consistent with the specified requirements indicated elsewhere in this document and coordinated with the STATE.

   c. Automatic System Cascade Stop:

      1.) All conveyor segments shall have the capability to shutdown via an “Auto-Stop” sequence. The conveyors of these outbound transport subsystems shall shut-down through an auto-stop circuit, which shall time-out and immediately stop all conveyors if, after a 15 minute period (adjustable), no bags have been detected by the auto-start circuits.

4. Other Control Functions:

   a. Control Functions associated with the conveyor line's Cascade Stop, Jam Detection/Restart, Emergency Stop/Reset, Motor Control Panels, Motor Overload conditions and respective Alarm Silence function(s) shall be compliant with the specified requirements described elsewhere in this document.

   b. Jam Reset and Emergency stop control station(s) location and function shall be consistent with the specified requirements indicated elsewhere in this document. All Jam Reset and Emergency stop stations shall be located adjacent to each conveyor drive on the maintenance catwalk side, so that they are accessible by maintenance personnel.

F. EDS Security Screening System

1. General

   a. Submit as per Part 1 of this specification submittal process, to the City of El Paso or its representative for review and approval, the control sequence of operation and functionality of the In-Line EDS Security System.

   b. The type of EDS device to be provided and integrated into the Baggage Handling System for this project is the L3 3DX 6700.

   c. Depending on the TSA’s chosen EDS machine for the project, obtain the latest EDS OEM’s Site Design and Planning Guide, and BHS Interface documents, as specified in Part 1 of this Specification.

   d. The control sequence of operation and functionality of the EDS system shall abide by the TSA protocols

contained in the Version 5.0 of the Planning Guidelines and Design Standards document. Obtain the TSA protocols / Planning Guidelines and Design Standards as indicated elsewhere in this specification from the TSA's website as required.

e. Assist the TSA's OST and testing representatives in performing the mandated Test Readiness Review (TRR) and Integrated System Acceptance Tests (ISAT) for the in-line EDS systems. Obtain the latest copy of the TSA's SSTP and ISAT test procedure (from the TSA via the City of El Paso) to ensure the completed CBIS meets all the protocols and requirements contained within, prior to the specified Pre-Test readiness review (Pre-TRR) and the TSA's TRR and ISAT(s). Prior to performing the Pre-TRR, TRR and ISAT(s), carry out a "dry test run" to confirm the system is ready for these tests and coordinate the scheduling of these tests with the City of El Paso and the TSA.

f. Prior to the TSA's mandated certification tests (i.e., Pre-TRR, TRR and ISAT); a SAT will be performed on each EDS machine by the EDS OEM, independent of the BHS. In this regard, provide the necessary support during the SAT on each EDS machine, which shall include but not be limited to the installation of power and controls to the related conveyor segments to allow for full operation of the EDS equipment.

g. It should be noted that all documentation that is associated with the operation/functionality of the CBIS, including the Detection SAT, Pre-TRR, TRR and ISAT are Security Sensitive Information (SSI) and will have to be managed/controlled as such, in accordance with 49 CFR Parts 15 and 1520.

h. The In-Line integrated EDS configuration for this project will consist of three (3) Screening Level Classifications which are as follows:

1.) Level 1 – EDS screening in the "Automatic" mode:

a.) All originating checked bags shall be routed by the BHS, through the ATRs, to an Explosive Detection System (EDS) machine for security screening. The EDS machine, which shall be provided by the TSA's Contractor/Equipment supplier, will automatically scan each bag. The EDS will provide a status for the bag "Cleared", "Alarmed", or "EDS Unknown" based on the assessment of the images and notify the BHS via the EDS/BHS interface. "Cleared" Level 1 bags will be routed to the sortation system using the most direct route. If no status is assigned to a bag by the EDS, the BHS will assign a "Communication Error". "EDS Unknown" and "Communication Error" bags will be automatically routed to the CBRA for Level 3 screening.

2.) Level 2 – Remote Operator Screening.

a.) Baggage that receives an "Alarmed" status from the level 1 EDS machine will have the alarmed image delivered via the security interface network to the EDS security monitoring area (level 2 Remote Operator OSR Workstation). A TSO shall view the image in the display for a configurable time duration utilizing the EDS Threat Resolution Tools (TRT) to determine if the bag is "Cleared" or "Alarmed". If the allocated time period expires (to be determined by local TSA staff; 45 seconds minimum), and no decision has been rendered, the image and relevant bag shall be given an "Alarmed" Level 2 status and shall be automatically routed to the CBRA for Level 3 ETD screening and appropriate handling. "Cleared" Level 2 bags shall be automatically routed to the sortation system using the most direct route; either via the Level 2 decision point high speed paddle diverter or, if the Level 2 decision was received before the bag arrived at the Level 1 decision point, via the Level 1 decision point vertical sort unit.

3.) Level 3 – Explosive Trace Detection (ETD) operation.

a.) Bags with a Level 1 "Communication Error", "EDS Unknown", and "Alarmed" Level 2 status

will be transported to the corresponding CBRA for further inspections and appropriate handling (ETD). Cleared level 3 bags would be re-introduced into the system via the clear bag (CB) subsystem(s). "Failed" level 3 bags will be further inspected by a LEO.

4.) Note that the terminologies of "Alarmed" and "EDS Unknown" as utilized throughout this document are general terms and in actuality is dependent on the type of EDS supplied. The different terminology for Unclear and Unknown is as follows:

a.) L3 Communications utilizes Search for "Alarmed" bags and "Unknown" for EDS Unknown bags

b.) "EDS Unknown" bags are bags that were caught in the EDS machine when a machine fault occurred and were subsequently discharged as the result of a machine restart/reboot cycle.

i. This description of operation is intended to define the unique overall functional requirements of the BHS control system that are related to the operation of the EDS subsystems regardless of the type of EDS device installed. As set forth elsewhere in these specifications, provide the definitive architecture, detailed design and any/all coordination required for the control system design in its entirety, including (but not limited to) the BHS-EDS interface requirements and to tailor the CBIS to meet the requirements of the EDS systems to ensure the functionality is provided as described herein. The operation described below shall be the primary operation for the system to be provided as a part of the scope of work specified herein:

1.) Provide and coordinate with the EDS equipment manufacturer as required to coordinate the details of the necessary interface(s) between the BHS and EDS systems in order to accomplish the intended operation described herein. Provide for any conduit, wiring and communication bridges between the BHS and EDS equipment systems that are required for these interfaces (hardware and software).

2.) BHS required interfaces with the Fire Alarm and Airport Access Control systems specified requirements shall be coordinated with the El Paso International Airport, the Airport's Security Contractor, and the Airport's operation and maintenance contractor(s).

j. Through the required interfaces with the EDS equipment systems, the BHS shall receive an "active" or "inactive" (i.e., Ready to Receive (RTR)) status for each of the EDS equipment devices which shall, on a real-time basis, be recognized by the BHS so as to determine whether bags should be sorted to the device and update the MDS displayed status for associated BHS conveyors and EDS equipment in the BHS control room. Provided that the associated devices are "active", the baggage shall then be diverted via diverter, to one of the lines feeding an in-line EDS equipment screening device. As soon as a machine becomes inactive, the diverter feeding that line shall immediately cease sending bags to that device. Should bags be queued upstream of the device after it has become inactive, an appropriate alarm shall be raised at the MDS and associated Satellite workstations indicating this situation.

k. Each of the SS lines shall contain a number of queuing conveyors upstream of the EDS equipment device which shall provide separation of the bags and buffer the input flow to the individual machines and allow for a balanced distribution of the bags among the available equipment. When all active Level 1 EDS equipment devices, or all those operating in the needed mode of operation, and their associated queuing conveyors are full, baggage shall be held upstream of the diversion points to the Level 1 EDS equipment devices until either the EDS machines are available or their associated queuing conveyors are no longer full. The BHS shall maintain positive tracking and status of bags at all times in the CBIS and CBRA areas.

l. The EDS security screening subsystems (matrix) shall be configured so that any number of the EDS devices can operate in either a fully-automated mode (machine decision) or in a "show all" mode of

operation that will allow review of the scanned image by an operator (located in the TSA OSR). The mode of operation will be software selectable through the EDS. Through required interfaces with the EDS screening devices/systems, the subsystem shall receive and immediately recognize this mode of operation (on a real-time basis) and route baggage appropriately.

m. Make provisions to accommodate a Level 2 operation in the controls system. Level 2 shall refer to the process whereby the images/information acquired by the Level 1 EDS equipment are presented to remote operators for manual review and subsequent resolution. In the absence of a Level 2 decision, the BHS control system shall automatically default non-cleared, non-EDS Unknown bags, if required at the level 2 decision point, to the level 3 manual ETD process. The system shall therefore allow for a minimum of 3 screening decision levels within the process, although only two may be utilized. The database of baggage IDs maintained by the BHS control system shall have a minimum of 3 security fields to record the screening process at each level as applicable. The BHS control system shall recognize decisions from various screening levels provided by the screening system and shall record these decisions in the database in the appropriate fields.

1.) If the Level 1 decision is Alarmed, then the corresponding bag shall be routed to the next available level of screening (Level 2 or 3).

2.) If a "decision pending" status (referred to as Level 2 in these documents) was given at hand-over (for Level 1 equipment only), the corresponding EDS equipment shall then send an additional (i.e., Level 2) bag-specific decision message (cleared, alarmed or EDS unknown) to the BHS when a decision is available. A decision time-out default time shall be established during controls development, and shall allow for a minimum of 45 seconds travel time between the output of the level 1 device and the level 2-decision points (and shall be a variable setting). Bags are then sorted to one of the diversion points to either Level 3 ETD or the sortation system (only if "clear").

n. As baggage is transported through the system in all of the processes described above including at the decision points downstream of the Level 1 EDS machines through the Level 1 and Level 2 decision points and until the bag arrives at the CBRA, it shall be continuously tracked for position by the BHS. The only allowable exceptions to this shall be while inside the EDS machines themselves where the EDS equipment shall track the bag. Particular attention should be paid to the "handoff" points between the BHS and EDS to ensure positive tracking of baggage.

1.) If the Level 1 decision is "EDS Unknown", the bag shall be routed to the CBRA for Level 3 screening as an "EDS Unknown" bag.

2.) If the EDS fails to assign a status and the BHS assigns a "Communication Error" status, the bag shall be routed to the CBRA for Level 3 screening as a "Communication Error" bag.

3.) If a bag loses tracking after the EDS machine, the bag shall be routed to the CBRA for Level 3 screening as a "BHS Unknown" bag.

o. In the paragraphs below it should be noted that "decision point" refers to the point at which a bag will either be routed into the BHS for final sortation or routed to the next security screening subsystem for further processing.

p. Provide bag-centering functionality prior to every EDS device (whose belt width is smaller than a standard conveyor (i.e. as a minimum, stationary plow diverters attached to the conveyor side guards to force the bag to the center of the conveyor)). As stated elsewhere in this document, submit to the City of El Paso or its representative, the type of centering to be proposed for review and approval.

q. To prevent "Out-of-gauge" items (refer to EDS specification for maximum bag sizes) being introduced into the Level 1 EDS device, provide a means to monitor for "out-of-gauge" items utilizing a photocell

arrangement. "Out-of-gauge" items result in both increased downtime due to EDS device reset/restarts time and bags that were being processed by the device at the time being ejected during the reset and given an EDS Unknown decision which results in those bags to be transported to the CBRA and potentially re-inserted into the system back to the Level 1 EDS devices. The "out-of-gauge" monitoring should take place prior to the diverters into the EDS devices(s) line and these "Out-of-gauge" items should be transported directly to level 3/CBRA.

2. Security Feed Subsystems (SF1)

   a. The Security Feed is fed by the ML1 subsystem. SF1 is also the start of baggage tracking into the EDS security screening system. The SF1 subsystem serves as the main line EDS transport line, feeding unscreened originating bags to subsystems OG1, SS1, SS2, and SS3. The SF1 subsystem consists of the following conveyance equipment:

      1.) One (1) ATR/BMA

      2.) Three (3) High-Speed Paddle Diverters (HSD/OG1, HSD/SS2, and HSD/SS3)

      3.) One (1) power turn

3. Security Screening Subsystems (SS1, SS2, SS3)

   a. The SS subsystem lines transport unscreened in-gauge originating bags to and from the EDS machines. Additionally, these lines transport to the Level 1 decision point vertical sorters. The SS1 subsystem serves as one of the three (3) main EDS transport lines feeding to the EDS1 machine. SS2 and SS3 subsystems shall be arranged and operate in a similar format. However SS2 has one less conveyor segment. The SS1 subsystem consists of the following conveyance equipment:

      1.) Conveyor segments SS1-01 through SS1-15

      2.) One (1) L3 3DX 6700 EDS machine as shown at SS1-10

      3.) One (1) Vertical Sorter Unit (VSU1) as shown at SS1-15

      4.) One (1) power turn on SS1-01

4. Out of Gauge Subsystem (OG1)

   a. The Out of Gauge subsystem handles baggage that will not physical fit through the EDS machines (refer to the EDS Manufacturer's guidelines for the maximum height / length restrictions). Baggage determined Out of gauge is routed to the CBRA for Level 3 screening via the Alarm Line 1 (AL1). The OG1 subsystem consist of the following conveyance equipment:

      1.) Conveyor segments OG1-01 through OG1-07

      2.) All originating baggage on these lines shall be processed through the Automatic Tag Reader (i.e., ATR-01), which shall be located at the charge end of the subsystem, as illustrated in the contract documents, to determine whether or not the bags are within the appropriate gauge for Level 1 screening through the In-Line EDS machines, via EDS subsystems or are considered as "out-of-gauge", and will therefore continue on the OG1 via the AL1 connection to the CBRA for ETD screening.

5. On-Screen Resolution Subsystems (OSR)

1.) The OSR1 subsystem serves as one of the three (3) On-Screen Resolution transport lines. OSR2 and OSR3 subsystems shall be arranged and operate in a similar format each with different number of conveyor segments, 5, 7 respectively. This subsystem consists of conveyor segments OSR1-01 through OSR1-8 for transport of Level 1 Alarmed and Suspect, BHS Unknown, Communication Error, and EDS Unknown to the CBRA. The OSR1 subsystem is directly fed baggage from the SS1 subsystem Level 1 Decision Point VSU. Baggage tracking shall be provided on this line. The OSR1 subsystem consists of the following conveyance equipment:

a.) Conveyor segments OSR1-01 through OSR1-8

b.) One (1) Level 2 decision point Vertical Sorter Unit as shown at OSR1-08

2.) Subsystems OSR2, and OSR3 will merge 'un-cleared' Level 1 bags onto the OSR1-02 conveyor.

3.) This subsystem consists of corresponding conveyor segments which include the EDS screening machines (EDS1, EDS2, EDS3), for the screening of baggage. The system includes one (1) Vertical Sorter as Level 1 decision point diversions, diverting Cleared baggage to the sort system via the Clear Line CL subsystems, and Alarmed, EDS Unknown, Communication Error, and BHS Unknown baggage to the AL subsystem for transport to the Level 2 decision point and eventual transport to the CBRA via the AL2 subsystem. Baggage tracking shall be provided on this line.

4.) OSR subsystem lines shall provide a minimum 45 seconds of transport time from the discharge end of the EDS machine to the Level 2 decision point.

6. Alarm Line Subsystem

1.) The AL1 subsystem serves as the Alarm Line for all bags that did not receive a Level 2 'Cleared' decision and out-of-gauge bags. The AL1 subsystem is directly fed baggage from the OG1 subsystem and AL2 merges onto the Level 2 Decision Point VSU baggage before continuing to the CBRA. Baggage tracking shall be provided on this line. The AL1 subsystem consists of the following conveyance equipment:

a.) AL1-01 through AL1-19

b.) Six (6) BRP stations, expandable to twelve (12) stations

2.) Twelve (12) sets of control stations shall be provided on the BRP conveyors AL1-03, AL1-04, AL1-06, AL1-07, AL1-09, AL1-10, AL1-12, AL1-13, AL1-15, AL1-16, AL1-18 and AL1-19 for dispatch of bags to the CBRA workstations. The control stations shall be integrated with the BRP BSD enclosures and the location of this enclosure shall be coordinated with the STATE and the TSA.

3.) The control station at CS/AL1-03 is described below; however, the control stations at the other above referenced BRP conveyors shall function similarly.

4.) The CS/AL1-03 control station shall control the operation of the AL1 conveyor line conveyors. This Control Station shall include the following operators/control devices:

a.) CS/AL1-03/EPB: Illuminated RED maintained contact mushroom-head emergency stop pushbutton switch: Upon activation of the pushbutton, the respective indicator light shall illuminate in a steady burning mode. The control system shall as a minimum stop conveyor segments AL1-01 through AL1-19 and sound the associated subsystem warning alarms. Resetting of the E-stop condition shall be consistent with the System Control Requirements of

this specification.

b.) CS/AL1-03/SPB: Flush-head GREEN momentary contact pushbutton switch. The controls for the "Reset/Restart" pushbutton restart the AL1 conveyors in the CBRA after the fault condition has been reset. This is the single Reset/Restart pushbutton location for the AL1 subsystem in the CBRA as required in the PGDS.

c.) CS/AL1-03/LTA: Illuminated AMBER jam indication light: This indicator light shall signify, by a steady burning indication, a jam condition at the discharge end photocell of conveyor. The indicator light's steady burning indication shall change to a flashing signal when the jam condition has been cleared, signifying that the fault is clear for the system reset, and shall extinguish only upon the restart of the conveyors, which shall be performed by actuating the system local start pushbutton,

5.) Twelve (12) Bag Status Displays (BSD) shall be provided on the BITs adjacent to conveyors AL1-03, AL1-04, AL1-06, AL1-07, AL1-09, AL1-10, AL1-12, AL1-13, AL1-15, AL1-16, AL1-18 and AL1-19 for displaying the bag tracking I.D., security status and other information in the CBRA per the requirements for BIT BSDs in the TSA's PGDS. The location of the visual data displays shall be coordinated with the STATE and the TSA.

6.) Provide twelve (12) hand-held scanners, without associated key pad functionality, on the BITs adjacent to conveyors AL1-03, AL1-04, AL1-06, AL1-07, AL1-09, AL1-10, AL1-12, AL1-13, AL1-15, AL1-16, AL1-18 and AL1-19 to permit the manual hand scanning of the 10-digit IATA bag tag of a bag which has arrived at the BRP/BIT as an BHS Unknown status (i.e., a bag which has been lost in tracking after being screened through an EDS machine) in an attempt to recover the bag's security screening status which may have been received from the EDS machine by the BHC database servers as well to recover the tracking ID which the bag entered the EDS machine to allow the bag's image to be displayed upon the SVS's.

7.) The AL1 CBRA conveyors (i.e., AL1-02 through AL1-19) shall energize when the AL1 line is activated and shall operate like a runout conveyor (e.g., activated by the upstream conveyor's discharge end photo-eye). These conveyor segments shall operate, once activated by the appropriate controls, until the bag reaches the head end photocell at the discharge end of each unload conveyor while the downstream conveyor is stopped (bag shall cascade stop at the head end photocell), until the bag advances fully from the conveyor segment (conveyor segment shall stop unless another bag is on the conveyor segment or another bag is blocking the upstream conveyor's head end photocell), or until the bag reaches the head end photocell at furthest downstream enabled BRP (bag shall cascade stop at the head end photocell and await removal to a BIT).

8.) At this point one of two queuing methods will be employed. Normal or Alternate (High Volume) Alarm Line Queuing Method depending on baggage load volume arriving at the CBRA. The Normal Alarm Line Queuing Method optimizes the CBRA during normal operations and the Alternate (High Volume) Alarm Line Queuing Method optimizes the CBRA in high volume periods.

a.) Under the Normal Alarm Line Queuing Method when a bag arrives at the first queue belt upstream of the AL1-03 BRP (AL1-02) the bag shall proceed to whichever BIT/BRP is available first to be assigned next available bag. If there are no available BIT's, the bags shall queue and hold on the BRP prior to the most upstream-enabled BIT. If there are no enabled BIT's, the bags shall queue at the second most downstream BRP. The bag shall stop at the head end photocell on AL1-02 until a BRP is enabled. Assuming the bag arrives at a BRP and that the associated BIT is enabled, the TSA agent can transfer the bag to a BIT by pressing the appropriate soft button on the BRP BSD for subsequent ETD processing as described below. If the bag is stopped at a BRP or queuing conveyor and the downstream BRP or queuing

conveyor is available (i.e., due to the bag at the downstream BRP being removed to a BIT), bag will automatically advance to the downstream conveyor (index) and the second bag will replace it on the first queue belt (i.e., employ dynamic advancement/index control logic).

(1.) The queuing prioritization shall be as follows:

(a.) Disabled BRPs, starting from the most downstream

(b.) Storage space outside of CBRA

(c.) Intermediate queues starting from the most upstream, excluding those in between enabled BITs

b.) Under the Alternate (High Volume) Alarm Line Queuing Method when the CBRA becomes overwhelmed and the queuing prioritization level 3 reaches capacity, the system shall switch to an Alternate Queuing Method (AQM) and the system starts advancing all additional bags arriving in the CBRA one conveyor at a time. While the AQM is triggered bags shall be forced to pass enabled, but unavailable BITs and the automated reinsert process will be disabled for those bypassed and enabled BRPs (i.e., without a clear conveyor path to the RL). Operators at the associated BITs will be instructed, by the BSD, to manually reinsert bags as necessary. The BRPs affected by AQM shall return to normal operations when the condition is lifted (i.e., a clear conveyor path to the RL is re-established).

9.) The bag's security status (i.e., "Alarmed", "Out of gauge", "BHS Unknown", "Communication Error", "EDS Unknown" or "Cleared" status) shall be indicated on the BRP BSD based on the status of the bag in addition to the other information described in the TSA's PGDS for BRP BSDs. The TSA agent shall then press the "INSPECT" soft button on the BRP BSD associated with the bag location (queue conveyor). This will stop any further movement of the conveyor until the head end photoeye of the BRP has been unblocked for 10 seconds (adjustable) to allow the TSO to remove the bag safely to the BIT, i.e., the queue belt shall not index/move if the TSO has to move the bag around to access the bag's handle/straps and inadvertently moves the bag from in front of the photocell. The BHS system will automatically update the BHS database containing the bag's tracking ID (IATA tag number or pseudo ID) with the information that the bag has begun Level 3 inspection and a time stamp of when it was transferred to the BIT.

7. Controls Functions

a. The following paragraphs describe the particular subsystem specific controls that will be required in addition to other controls (i.e., Bag Tracking, Jam Detection, Jam Reset, Cascade Stop, Oversize Detection, Merge Control, Auto Start, Auto-Stop, Emergency Stop, and all other controls functionality described elsewhere in this document) that will be required for each EDS subsystem (described elsewhere in this document).

b. All bags within the CBIS shall be positively tracked. Positive baggage tracking shall start at the ATR; continue through the CBIS, and all three screening levels. Therefore positive baggage tracking shall be provided for the SF1, EDS1, EDS2 and EDS3 subsystems from all input points to the associated outputs.

c. CBIS Tracking of Bags shall start at the first point of ID (e.g. at the ATR located on the SF1 subsystem) up to and including the entrance to the EDS or the handoff point to the EDS where the EDS will take over for processing through the EDS machine. Tracking starts again at the handoff point from the EDS exit point to the BHS. If the bag has been lost in tracking after passing through the ATR and before arriving at the EDS machine, baggage shall be tracked from the entry to the EDS machines. All bags shall be tracked in dynamic PLC RAM via a memory model of the bag ID number. The memory model will be updated in real-time to reflect the position of the bag on every conveyor segment through the

entire CBIS

d. Upon bag arrival, at the conveyor directly interfacing any of the EDS devices, the BHS shall, through the BHS-EDS interface(s), "hand over" the bag to the EDS equipment device by sending (or receiving) a bag ID number. The BHS system shall provide the EDS system with an ID for each bag and track that baggage item with the unique ID until the closest encoding point (be it an ATR position) and update the ID with the real baggage ID at that encoding point. The bag ID shall be easily recognizable as an EDS bag ID (e.g. start with 1 for EDS device #1, 2 for EDS #2 and continue on accordingly). Coordinate with the EDS supplier for all BHS/EDS handshake protocol. Upon receipt of a signal from the EDS equipment, the BHS shall then advance the bag into the EDS equipment device. The bag shall be scanned and, depending on mode of operation, the bag shall be passed back to the BHS. The EDS equipment shall pass the bag back to the BHS by sending an appropriate message that includes status (e.g., cleared, alarmed, EDS unknown, or no status) and also echoes the bag ID number upon arrival at the exit conveyor, note: not all machines will pass the bag status back at the same time that the bag is passed back from the machine, it may happen at a downstream point and the BHS control system should be set up to allow for this. Upon receipt of the corresponding bag status/hand-over message the BHS shall send a message back to the EDS equipment acknowledging receipt of that status and route the baggage as described below.

e. When a "cleared" bag decision is received from any EDS equipment for a known bag, the BHS shall relay the decision through the interfaces described elsewhere in these specifications and route the cleared bag to the corresponding main line for onward transport to the appropriate make-up device.

8. The following describes the EDS security subsystem operation;

a. Level 1 Screening

1.) All baggage will enter the conveyor line that feeds the Level 1 Screening equipment. Level 1 screening equipment shall consist of EDS equipment located at EDS1, EDS2, and EDS3 to be provided by others and integrated under this contract by the BHS Contractor.

2.) Bags entering the EDS device will have a unique bag security identification ID assigned, the BHS shall pass this ID number to the EDS via the EDS/BHS interface for tracking purposes and status updates (coordinate with the EDS supplier for all BHS/EDS handshake protocol).

3.) The EDS device software (by others) will automatically scan each bag. The EDS will provide a status for the bag "cleared" or "alarmed" based on the assessment of the images and notify the BHS via the EDS/BHS interface.

a.) All bags will be tracked in dynamic PLC RAM via a memory model of the bag ID number, from the entry to the EDS equipment (Tracking of Bags should start at the first point of ID (e.g. at an ATR reader, EDS device, or appropriate other location) and tracking actually ends at the entrance to the EDS or the handoff point to the EDS since the EDS takes over. Tracking starts again at the handoff point from the EDS to the BHS). The memory model will be updated in real-time to reflect the position of the bag on every conveyor.

b.) Bags that receive a "Cleared" status will be diverted to the sortation area, after having their ID status updated, be it an ATR.

c.) Bags that receive an "Alarmed" status will be processed as described in the Level 2 Screening procedure.

d.) Bags that receive an "EDS Unknown" status will be processed as described in the Level 3

Screening procedure.

e.) Bags not receiving a status from the EDS shall be assigned a "Communication Error" status by the BHS and will be processed as described in the Level 3 Screening procedure.

b. Level 2 Screening

1.) Baggage that receives an "Alarmed" status will have the suspect image delivered via the security interface network to the EDS security monitoring area (level 2). The images shall be received and displayed on monitors in the EDS control room.

2.) An operator will view the image in the display for configurable time duration. If the allocated time period expires, and no decision has been rendered, the image and relevant bag will be given an "Alarmed" Level 2 status.

3.) A Level 2 operator will press the 'Cleared' button for resolved alarms.

a.) These bags will be assigned a 'Cleared' Level 2 status.

b.) The information will be transmitted to the BHS via the EDS/BHS interface.

c.) The BHS will update the information referenced to the Bag Security ID and continue to track the bag and route the bag to the main sortation line for sortation to the output destination.

d.) If the BHS receives a level 2 "cleared" status after the bag has been diverted to the level 3 area, such message shall be ignored (however, appropriate logs of this event shall be kept and provided in reports)

4.) An operator will press the "Alarmed" button for images that cannot be resolved in this process.

a.) These bags will be assigned an "Alarmed" Level 2 status.

b.) The information will be transmitted to the BHS via the EDS/BHS interface.

c.) The BHS will update the information referenced to the Bag Security ID and continue to track the bag through the Level 3 diversion point.

5.) Bags that receive an "EDS Unknown" status will be re-routed back to Level 1 for re-screening.

c. Level 3 Screening

1.) Bags with an "Alarmed" Level 2 status or an "EDS Unknown / BHS Unknown / Communication Error / Out-of-Gauge" status will be transported on the SB line to the CBRA for further inspections and appropriate handling.

2.) "Cleared" Level 3 bags would be re-introduced into the system via the CB subsystem.

3.) Failed level 3 bags would be handled per the Airport's and LEO protocols.

9. BHS Unknown Tracking Bags

a. If the Level 1 decision is "BHS unknown" (as the result of a bag losing tracking post EDS but prior to

the Level 2 diverter), then the corresponding bag(s) shall be routed to the CBRA.

10. EDS Unknown Tracking Bags

    a. If the Level 1 decision is "EDS unknown" (as the result of a L3 3DX 6700 device fault reset), then the corresponding bag(s) shall be routed to the CBRA.

11. Communication Error Tracking Bags

    a. If the EDS fails to issue a Level 1 decision for any reason the BHS shall assign and track the bag as a "Communication Error" then the corresponding bag(s) shall be routed to the CBRA.

12. Fail Safe - Clear Bag (CB) Diversion

    a. The Control system shall provide for fail-safe controls downstream of the vertical sort conveyors on the CL subsystems to ensure that all bags that are supposed to be transported to the suspect bag system are conveyed to that subsystem. When a bag is transferred to the CL conveyor line, its bag status and the length of the bag is measured and verified. If the bag status is not clear or the length of the bag does not match its previous measurement, the conveyors will stop as shown in the contract drawings, and a failsafe fault will be initiated. The failsafe fault will illuminate the "BLUE" failsafe stack light and audible alarm adjacent to the associated vertical sorter.

    b. An alarm at the centralized MDS, Touch Screen Terminal and associated Satellite workstation will be raised identifying a failsafe fault status. The corresponding alarm will be distinct from all other alarms. Require reset of this condition to restart that clear line subsystem (use the appropriate local restart pushbutton to actually restart the subsystem).

13. EDS Start-up Sequence

    a. The following start sequence describes security screening for the SS1 Security Shunt lines and is typical for the three (3) Security Shunt lines:

        1.) The Level 1 EDS unit(s) shall be activated by the TSA, independently of the baggage system, at the beginning of the day to allow for sufficient warm-up time. The BHS system cannot start up until it has a Ready to Receive (RTR) status from at least one of the EDS machines. Also refer to the EDS Operational Test Kit "OTK" mode of operation outlined in the following paragraphs.

14. BHS Time-Out Sequence

    a. The Level 1, Level 2 and Level 3 EDS conveyor lines shall have an auto-stop function. Photocells located at the discharge end of conveyor SS1-XX shall be on a 20-minute timer (adjustable). Additional SS lines will be similar to SS1. If the photocell remains unblocked for 20 minutes while the conveyors are running, the individual conveyors on the SS1 line shall shut down. If an Emergency Stop pushbutton is activated or a jam occurs at any point during operation, the timers shall reset to zero.

15. EDS Shut Down Sequence

    a. If the EDS machine has been shut down at the end of the day, the RTR signal will be dropped, and the BHS system upstream of the CBIS shall also shut down. If a photo-eye is blocked by a bag still on the upstream conveyors, and alarm will be declared for the bag to be removed.

16. E-Stop Functionality

a. Activation of any L3 3DX 6700 E-stop will stop the associated ED subsystem conveyors and L3 3DX 6700 device.

b. Activation of an ED conveyor subsystem E-stop will not E-stop the L3 3DX 6700.

17. EDS OTK (formally IQ Test) Mode Control Stations

a. A control station shall be installed at the discharge end of each EDS machine's exit conveyor. The location of these control stations shall be coordinated with the City of El Paso and TSA. The control station shall contain the following operators/control devices:

	Description	Label
c.	"Green" flush-head Pushbutton	Reset/Restart
d.	Lighted Push-Pull (Lockable)	Emergency Stop
e.	Insert/Auto Switch	Insert/Auto
f.	"Amber" Illuminate Pushbutton	Jam Reset

1.) In the Insert/Auto mode the BHS shall operate as already outlined in this document.

2.) In the TEST mode (primarily used by the TSA or EDS Contractor for testing/calibration of the EDS device), all bags input for testing shall stop upon reaching the head end photocell of the EDS device exit interface conveyor and shall require removal and subsequent actuation of the start pushbutton on the control station to re-start the exit conveyor.

3.) While in the TEST mode, bags shall not be diverted to the respective EDS device that is being tested.

4.) Operation Test Kit (OTK) Procedure is as follows:

a.) Turn switch @ CS/SS1-XX to the "TEST" position for OTK Test (Procedure for all other impacted EDS units shall follow similar)

b.) Wait for all bags to clear / flush out of the EDS machine past SS1-XX conveyor.

c.) Place Operational Test Kit on SS1-08 entrance queue conveyor

d.) Push the blue "INSERT" Operational Test Bag Button

e.) Check test results at EDS display for each Operational test box scanned

f.) Wait for SS1-XX conveyor to stop after each Operational test box exits EDS machine

g.) Remove Operational test box from SS1-XX

h.) Press "EXIT RESET" button at CS/SS1-XX

i.) After all Operational tests are done, turn switch at CS/SS1-08 back to "AUTO" position

j.) Baggage stopped before EDS machine shall resume normal scanning process

18. Decision Point Control Station and Stacked Light Modules

    a. A control station shall be installed at each "decision point" divert. The location of these control stations shall be coordinated with the TSA and City of El Paso or its representatives. The control station (Control Station Type# 10) shall contain the following operators/control devices:

        1.) "Reset / Restart" Pushbutton

        2.) Lighted Push-Pull (lockable) "E-Stop"

        3.) "Cleared" Illuminated Green Light

        4.) "Alarmed" Illuminated Red Light

        5.) "Unknown" Illuminated Amber Light

        6.) "Jam" Illuminated Amber Indicator Light

        7.) "Auto-Maint" Selector Switch

        8.) "Raise" Black Pushbutton

        9.) "Lower" Black Pushbutton

    b. Provide at each "decision point" vertical sort conveyor / high speed paddle diverter a stacked light module with audible alarm, blue (failsafe); amber (EDS/BHS Unknown); amber (Communication Error), red (Alarmed) and green (Cleared) lenses using LED bulbs. The stacked module shall be mounted on a post at least 30 inches above the side guard so as to provide an additional visual (and audible in case of failsafe fault) indication of a bag's status as it passes the diversion point(s).

    c. Provide at each L3 3DX 6700 exit conveyor a stacked light module with amber (EDS Unknown); red (Alarmed) and green (Cleared) lenses using LED bulbs. The light will activate in parallel with the lights on the control station described above. The stacked module shall be mounted on a post at least 30 inches above the side guard so as to provide an additional visual indication of a bags status as it passes the diversion point(s).

19. Other Controls Functions

    a. Submit as part of the functional specification submission a detailed matrix clearly identifying all the possible security screening failure scenarios and the fallback action to be initiated (manually by the control room operator or automatic by the BHS Computer system).

20. Maintenance Catwalks

    a. Design, provide and install maintenance catwalks and access ladders required to allow easy access to all three – (3) outbound L3 3DX 6700 devices by TSA agents who are responsible to both test the EDS devices and clear bag jams within the devices. Submit to the Engineer, TSA and City of El Paso the design of the catwalk and access ladders for review and approval.

    b. Coordinate access provisions for TSA operators so as to minimize obstructions. Locations of control

stations and electrical boxes are to be coordinated to support unrestricted access by TSA staff to the input/output EDS interface positions. The provisions of the conveyor supports; drive configurations, personnel guarding and side guards shall allow for maximum TSA operator accessibility.

21. EDS Reporting

a. The BHS reporting system shall provide for report generation of the security subsystem activities. In addition to the reports identified elsewhere in these specifications which will need to reflect EDS activity, submit a daily log of all bags processed at the EDS devices with appropriate filtering provisions to allow for sort by bag ID specifics, EDS device, decision rendered and lost tracking.

b. As a fault finding diagnostics tool, the BHS operator shall have (via a pull down screen at the MDS workstation) the ability to monitor the status of all EDS/BHS handshake/interface signals (per device) in real time. Submit to the City of El Paso or its representative a sample of the diagnostic status screen.

c. Monitor the following EDS/BHS operations and generate fault messages both graphically and in text at the MDS and stop directing bags to the faulted ED line until the issue has been resolved:

1.) Three consecutive baggage IDs lost at the EDS

2.) Loss of communications between the EDS and BHS

3.) Three bags in a row with an “EDS unknown”

4.) Loss of bag tracking through the EDS line

G. CBRA Re-Input Line RI1 Subsystem

1. General

a. The CBRA Re-Input Line subsystem (RI1) consists of conveyor segments RI1-01 through RI1-10. The RI1 subsystem is used for the re-input of unscreened baggage (i.e., BHS / EDS Unknown security status bags) from CBRA to the SL1 subsystem for re-screening by the Level 1 EDS machines. Baggage tracking shall be provided on this line starting at the SF1 subsystem ATR.

2. Control Equipment Components

a. The following description for the RI1 re-input line and related sequence of operation is provided as an example; detailed control functionality shall be coordinated with the City of El Paso and the TSA through the shop drawing submittal process.

1.) Two control stations shall be provided on stanchions for Start/Stop control of this conveyor line, adjacent to the RI1 load conveyor (RI1-01), for the initial start-up of the conveyor line. The location of the control stations and related stanchions shall be coordinated with the City of El Paso and the TSA.

2.) The RI1 control station located at the charge end of the RI1-01 conveyor shall be (Type XX). The CS/RI1-01 control station shall control the operation of the RI1 conveyor line conveyors. This Control Station shall include the following operators/control devices:

a.) CS/RI1-01/SPB: Illuminated green momentary contact pushbutton switch: Actuation of the subsystem’s illuminated start pushbutton shall energize the respective Visual/Audible warning alarms along the conveyor line, both at the input end and along the outbound transport

conveyor right-of-way for 10 seconds (adjustable). The subsystem's System Start pushbutton shall flash, indicating imminent system start-up. After the 10 second "Run" alarm, conveyors RI1-01 through RI1-10 shall start and the System Start pushbutton's flashing indication shall change to a steady burning signal.

b.) CS/RI1-01/ALM: Sonalert warning alarm: Start-up warning alarm for the RI1 subsystem.

c.) CS/RI1-01/EPB: Illuminated red maintained contact mushroom-head emergency stop pushbutton switch: Upon activation of the pushbutton, the respective indicator light shall illuminate in a steady burning mode. The control system shall stop conveyor segments RI1-01 through RI1-08 and sound the associated subsystem warning alarms. Resetting of the E-stop condition shall be consistent with the System Control Requirement of this specification.

3.) The RI1 control station located at the discharge end of the RI1-01 conveyor shall control the operation of the RI1 conveyor line conveyors. This Control Station shall include the following operators/control devices:

a.) CS/RI1-01/LTW: Illuminated white over-length indicator light: This indicator light shall signify, by a steady burning indication, an over-length bag condition at the discharge end photocell (i.e., PE/RI1-01) of conveyor RI1-01. The indicator light's steady burning indication shall change to a flashing signal when the over-length condition has been cleared, signifying that the fault is clear for the system reset, and shall extinguish only upon the restart of the conveyors, which shall be performed by actuating the system local start pushbutton.

b.) CS/RI1-01 /LTA: Illuminated amber jam indication light: This indicator light shall signify, by a steady burning indication, a jam condition at the discharge end photocell (i.e., PE/RI1-01A) of conveyor RI1-01. The indicator light's steady burning indication shall change to a flashing signal when the jam condition has been cleared, signifying that the fault is clear for the system reset, and shall extinguish only upon the restart of the conveyors, which shall be performed by actuating the system local start pushbutton.

b. Provide the necessary control stations with their respective control devices and functions for the RI1 conveyor line to accommodate the requirements relating to Jam Reset and Emergency Stop Control/Reset.

3. Control Functions

a. Subsystem Initial Start-Up ("Manual Start"):

1.) Actuation of one of the Subsystem's Start pushbuttons shall cause the control device (PB) to flash and energize the conveyor line's Visual/Audible warning alarms along the conveyor light right-of-ways (i.e., RI1), both in the CBRA and in the CBIS space, for 10 seconds (adjustable). The flashing of the illuminated pushbutton shall signify imminent start-up of the subsystem. After start-up warning alarm period, the conveyor segments shall start sequentially from the output (45° Merge) to the input (RI1-01) with an appropriate delay between each motor starter actuation to ensure electrical power surges are minimized. Upon successful start-up of the subsystem, the flashing indication of the pushbutton shall change to a steady burning signal. The start pushbutton shall also cause the respective collection conveyor on the ML1 line to start, along with the downstream EDS conveyor segments, if not already running.

b. Start-up alarms and fault alarms shall be located as required, along the conveyor line, as specified elsewhere in this specification. Start-up and Fault Warning Alarm(s) location and function shall be consistent with the specified requirements indicated elsewhere in this document.

c. Jam Reset and Emergency stop control station(s) location and function shall be consistent with the specified requirements indicated elsewhere in this document. All Jam Reset and Emergency stop stations associated with the RI1 line's transport conveyors shall be located adjacent to the conveyor drives on the maintenance side (e.g., drive assembly), so that they are accessible by maintenance personnel.

d. Over-height / Over-length Detection (Maximum Out of Gauge Dimension Detection):

1.) An over-height and an over-length photocell shall be provided at the discharge end of RI1-01; their respective indicator lights shall be located on the input end control station (CS/RI1-01B). Interruption of the photocells shall immediately stop conveyors RI1-01 and RI1-02, and illuminate the respective indicator light on the control station; the associated indicator light shall signify, by a steady burning indication, an oversize bag condition which shall change to a flashing signal once the fault condition has been cleared. The conveyor shall be restarted by repositioning or removing the bag, and pressing the RESET/START pushbutton. Note that the dimensions that these sensors shall detect are the maximum height and length of an OOG (not Oversize) bag; refer to the EDS Manufacturer's guidelines for the maximum height / length restrictions. Additionally, over-height photocells and respective reflectors shall be constructed as such that height is adjustable.

e. Other Control Functions:

1.) Control Functions associated with the conveyor line's Cascade Stop, Jam Detection/Restart, Emergency Stop/Reset, Maintenance Control Panels (if added to the contract), Motor Overload conditions and respective Alarm Silence function(s) shall be compliant with the specified requirements described elsewhere in this document.

2.) Flash the Input/Load Conveyor Start Pushbutton "Green light" when the RI1 collection conveyor subsystem has cascaded back to the load belt. This will notify the TSA agent that a jam/fault has occurred in the downstream subsystem.

3.) Merge Control functions associated with the conveyor lines' 45° merge conveyors shall be compliant with the specified requirements described elsewhere in this document. The ML1 line shall be considered as the Primary Line and the RI1 as the Secondary line.

H. Outbound Oversize Line OS1 Subsystem

1. General

a. The outbound oversize system consist of the following:

1.) OS1 New Conveyors

2.) New Fire / Security Doors

b. All fault annunciation and status reporting for the outbound oversize counter conveyor subsystems shall be displayed both graphically and in text on the workstation MDS system and Touch Screen Terminal.

c. The following description for the OS1 oversize line and related sequence of operation is provided as an example; detailed control functionality shall be coordinated with the City of El Paso and the TSA through the documentation submittal process.

2. Control Equipment Components

a. Start-up alarms and fault alarms shall be located as required, along the oversize line(s) and at the

associated runout conveyors. Start-up and Fault Warning Alarm(s) location and function shall be consistent with the specified requirements indicated elsewhere in this document. The location of the alarms shall be coordinated with the City of El Paso.

b. Over height photocells and a lighted reset pushbutton shall be provided for the clear bag load conveyor upstream the security door.

3. Control Stations (OS CBRA Conveyors)

a. New start/stop control device(s) specified below:

1.) The new Oversize input control station shall be labeled as CS/OS1-01 and shall interface with the Airport's existing Card Swipe Module. A Type 3 Control Station shall include the following operators/control devices:

a.) CS/OS1-01/SPB: Illuminated GREEN momentary contact pushbutton switch: The System Start pushbutton shall begin to flash only upon a successful activation of the security card reader. The flashing of the illuminated pushbutton shall signify that security clearance has been granted to operate the system. Upon successful activation of the pushbutton, the flashing indication shall change to a steady burning signal and the control system shall begin to sound all associated subsystem start-up warning alarms and start conveyors OS1-01 through OS1-07. The remaining downstream conveyors shall start via an "Auto-Start" circuit (if not already running) and runout conveyor OS1-10 shall operate in an inch and store (indexing) function, as described elsewhere in this specification.

b.) CS/OS1-01/EPB: Illuminated RED maintained contact mushroom-head emergency stop pushbutton switch: Upon activation of the pushbutton, the respective indicator light shall illuminate in a steady burning mode. The control system shall stop conveyor segments OS1-09 through OS1-10 (minimum) and sound the associated subsystem warning alarms. Resetting of the E-stop condition shall be consistent with the System Control Requirement of this specification. The location of the Emergency Stop control stations and related E-stop Zones shall be coordinated with the City of El Paso.

c.) CS/OS1-01/PBS: Flush-head RED momentary contact pushbutton switch. The controls for the System Normal "Manual" Stop shall stop conveyor segment OS1-01 and close its security door, upon activation of the pushbutton and a time-out sequence to allow the conveyor segment to be clear of any baggage. The remaining downstream conveyors shall stop via an "Auto-Stop" circuit, as specified elsewhere in the document.

d.) CS/OS1-01/LTW: Illuminated WHITE over-length indication light: This indicator light shall signify, by a steady burning indication, an over-length bag condition at the over-length detection photocell (i.e., PE/OS1-01A) of conveyor OS1-01. The indicator light's steady burning indication shall change to a flashing signal when the over-length condition has been cleared, signifying that the fault is clear for the system reset, and shall extinguish only upon the restart of the conveyors, which shall be performed by actuating the system local start pushbutton.

e.) CS/OS1-01/LTW: Illuminated WHITE over-height indication light: This indicator light shall signify, by a steady burning indication, an over-height bag condition at the over-height detection photocell (i.e., PE/OS1-01B) of conveyor OS1-01. The indicator light's steady burning indication shall change to a flashing signal when the over-height condition has been cleared, signifying that the fault is clear for the system reset, and shall extinguish only upon the restart of the conveyors, which shall be performed by actuating the system local start pushbutton.

f.) CS/OS1-01/LTA: Illuminated AMBER jam indication light: This indicator light shall signify, by a steady burning indication, a jam condition at the discharge end photocell (i.e., PE/OS1-XX) of conveyor OS1- XX . The indicator light's steady burning indication shall change to a flashing signal when the jam condition has been cleared, signifying that the fault is clear for the system reset, and shall extinguish only upon the restart of the conveyors, which shall be performed by actuating the system local start pushbutton,

g.) CS/OS1-01/ALM: Sonalert warning alarm: Start-up warning alarm for the OS1 subsystem.

b. Provide one (1) control station that shall control the operation of the Oversize conveyors in the CBRA. It shall be located and labeled as follows:

1.) A Type 5 control station, which shall be located adjacent to the OS1-10 (mounted on the wall) at the Oversize unload conveyor's charge end and include the following operators/control devices. Consistent with the contract requirements this control station shall be labeled as CS/OS1-10:

a.) CS/OS1-10/ALM: Sonalert warning alarm: Start-up warning alarm for the OS1-10 conveyor.

b.) CS/OS1-10/LTB: Illuminated BLUE Scan OK indication light: This indicator light shall signify, by a steady burning indication, an acknowledgement that the bar code has been positively scanned by the scan gun or that the agent has acknowledged that the bag does not have a tag by entering the 'Unknown Carrier' code on the hand-held scan gun. The indicator light's steady burning indication shall extinguish only upon the restart of the conveyors, which shall be performed by actuating the system "Bag Advance" pushbutton.

c.) CS/OS1-10/BPB: Flush-head BLACK momentary contact pushbutton switch. The controls for the "Bag Advance" pushbutton shall advance baggage toward the discharge end photocell (i.e., PE/OS1-10) of conveyor OS1-10 until either the pushbutton switch is released or the bag reaches the Full photoeye PE/OS1-10.

d.) CS/OS1-10/SPB: GREEN momentary contact pushbutton switch: Actuation of the conveyor's reset/restart pushbutton shall reset faults associated to the Oversize suspect bag conveyor in the CBRA and shall energize the respective Visual/Audible warning alarm on the conveyor segment for 10 seconds (adjustable). After the 10 second "Run" alarm period, conveyors OS1-9through OS1-10 shall start.

e.) CS/OS1- 10/EPB: Illuminated RED maintained contact mushroom-head emergency stop pushbutton switch: Upon activation of the pushbutton, the respective indicator light shall illuminate in a steady burning mode. The control system shall stop conveyor segments OS1-09 through OS1-10 (minimum) and sound the associated subsystem warning alarms. Resetting of the E-stop condition shall be consistent with the System Control Requirement of this specification. The location of the Emergency Stop control stations and related E-stop Zones shall be coordinated with the City of El Paso.

f.) CS/OS1-10/LTA: Illuminated AMBER jam indication light: This indicator light shall signify, by a steady burning indication, a jam condition at the discharge end photocell (i.e., PE/OS1-XX) of conveyor OS1- XX . The indicator light's steady burning indication shall change to a flashing signal when the jam condition has been cleared, signifying that the fault is clear for the system reset, and shall extinguish only upon the restart of the conveyors, which shall be performed by actuating the system local start pushbutton,

c. Control Functions

1.) Prepare software for the modified conveyor line's control systems reflecting the Outbound Oversize Conveyor Line's sequence of operation and functionality below. Describe the particular the subsystem specific controls in addition to the controls (i.e., Jam Detection, Jam Reset, Cascade Stop, Auto Start, Auto-Stop, Emergency Stop) that shall be required as part of the installation of this new subsystem.

2.) Subsystem Initial Start-up at Input Conveyor ("Manual Start"):

a.) The Oversize Input conveyor shall be activated by a security card swipe. This action shall supply power to the pushbutton control station located at the Input (Load Conveyor) area. Actuation of the Subsystem's Illuminated Start pushbutton shall energize the conveyor line's Visual/Audible warning alarms along the conveyor line right-of-way, both in the public space and air side, for 10 seconds (adjustable). The subsystem's respective security door shall open while the start-up alarm sounds and flashes. After start-up warning alarm period and when the security door is fully opened, conveyor segments OS1-01 through OS1-10 shall start.

3.) Automatic System Cascade Start

a.) The conveyor segments downstream shall start via an "Auto Start" sequence. Provide auto start photocells far enough upstream of the outbound transport conveyors, not specifically controlled by the "Start/Stop" control station to permit the conveyor belts to come up to speed prior to the actual processing of baggage. Program the auto start circuit to start conveyor segments whenever the OS1 auto start photocell is interrupted. All conveyors under the auto-start function shall start sequentially from the output to the input with an appropriate delay between each motor starter actuation to ensure electrical power surges are minimized. The Oversize CBRA Unscreened Bag Runout conveyor shall also be energized to operate under an inch-and-store (indexing) control function.

b.) A warning buzzer shall be positioned at/near the OS1 runout conveyor, in the Oversize CBRA. This buzzer shall be activated at the start-up of the OS1 line. Additional Start-up Alarms and Fault alarms shall be located, as required, along the modified OS1 line's right-of-way (e.g., maintenance catwalk areas).

4.) Automatic System Cascade Stop:

a.) All Oversize unscreened bag transport conveyors shall have the capability to shutdown via an "Auto-Stop" sequence. Provide a photocell upstream of each conveyor segment and program the auto-stop circuit to stop the OS1 line and to close the security doors if the door clear photoeyes are not blocked (i.e., whenever the auto stop photocell does not sense a bag for a 5 to 30 minute period (adjustable). The same photocell may control both "Auto Start" and Auto Stop" functions.

4. Other Control Functions

a. As noted above, the OS1 unscreened bag transport subsystem ends within the CBRA at conveyor OS1-10. The Oversize CBRA unload conveyor (OS1-10) shall have a hand-held scan-gun.

b. The OS1 Oversize CBRA conveyor shall operate in an indexing mode for bag collection. When the bag arrives at the charge end photoeye of the indexing conveyor(s), the bag shall fully advance onto the conveyor and stop. For the OS1-10 runout conveyor, if the TSA agent needs to move the bag closer to his location, the TSA agent shall then press the "Bag Advance" button on the Control Station to position the bag for removal. This shall stop any further advancement of that bag.

c. The runout conveyor shall not index until ten seconds (adjustable) have elapsed from the time of the pressing of the "Bag Advance" button (to allow sufficient time for the TSO to remove the bag from the conveyor), i.e. the indexing conveyor shall not index/move while the TSO is removing the bag to one of the ETD screening stations.

d. "Cleared" Level 3 bags would be presented to the bagroom for carrier pickup via the oversized bag slide. Before the bag is presented to the carriers, the bag's 10-digit bag tag shall be scanned to indicate the bag was cleared in the CBRA and updated with the time stamp of when it was scanned in the CBRA and assigned a cleared security status to update the BHS database.

e. "Alarmed" Level 3 bags would be held in the CBRA for Airport/Local TSA handling protocols. In this regard, the bag's 10-digit bag tag shall be scanned and the agent shall indicate the bag was alarmed in the Oversize CBRA. When the bag is hand scanned at CBRA, the 10-digit bag tag information shall again be updated with the time stamp of when it was scanned in the CBRA and assigned an alarmed security status to update the BHS database.

f. Submit to the City of El Paso and the TSA a functional specification on the Oversize CBRA operation for review and approval.

g. When the "Cleared" bag arrives outside the Oversize CBRA at the oversized bag slide, an indicator (yellow) light shall flash above the OS slide on the outside of the building to indicate a bag present. The audio/visual beacons located at/near each outbound make-up device shall also indicate oversize bag(s) are ready for pickup by the airline's baggage handlers. Once all of the oversize bags are picked up the lights at the oversize bag slide and at/near the individual make-up devices shall extinguish.

h. Control functions associated with the conveyor line's Fire/Security door(s) operation, Cascade Stop, Jam Detection/Restart, Emergency Stop/Reset, Motor Control Panels, Motor Overload conditions and respective Alarm Silence function(s) shall be compliant with the specified requirements described elsewhere in this document.

I. Clear Line Subsystems CL1

1. General

a. This subsystem consists of conveyor segments CL1-01 through CL1-08, for transport of CLEAR baggage to sortation ATR. The CL2 subsystem receives Cleared bags from the EDS2 Level 1 Decision point. The CL3 line merges Cleared bags onto CL1 subsystem from the EDS3 Level 1 decision point. The CL4 line merges Cleared bags onto CL1 subsystem, from the CL4 Level 2 decision point. The CL5 line merges Cleared bags from the CBRA.

2. Control System Components

a. The following description for the CL1 clear bag line and related sequence of operation is provided as an example; detailed control functionality shall be coordinated with the City of El Paso and the TSA through the shop drawing submittal process. The CL2 and CL3 clear bag lines shall operate in a similar manner.

b. Provide the necessary control stations with their respective control devices and functions for the CB1 conveyor line to accommodate the requirements relating to the Fire Door operation , Jam Reset Control Function and Emergency Stop/Reset Controls.

3. Controls Functions

a. There will be no manual start/stop controls for the conveyors in these subsystems. All conveyors will operate by means of auto start/stop circuits.

b. Merge Control functions associated with the conveyor lines' 45° merge conveyors shall be compliant with the specified requirements described elsewhere in this document. The CB1 line shall be considered as the Primary Line and the CL2, CL3, CL4 and CL5 as the Secondary lines.

4. Clear Bag Subsystem CL1

a. General

1.) This subsystem consists of conveyor segments CL1-01 through CL1-08, for transport of clear baggage from the EDS1 Level 1 decision point to the clear bag subsystem CB2 for eventual sortation and baggage make-up via Sortation Line 1 (SL1) subsystem.

b. Control System Components

1.) The following description for the CL1 clear bag line and related sequence of operation is provided as an example; detailed control functionality shall be coordinated with the City of El Paso and the TSA through the design review meeting and submittal review process. The CL2, CL3, CL4, Cl5 clear bag lines shall operate in a similar manner.

2.) Provide the necessary control stations with their respective control devices and functions for the CL1 conveyor line to accommodate the requirements relating to the Fire Door operation, Jam Reset Control Function and Emergency Stop/Reset Controls.

c. Controls Functions

1.) There will be no manual start/stop controls for the conveyors in these subsystems. All conveyors will operate by means of auto start/stop circuits.

2.) Start-up alarms and fault alarms shall be located as required, along the conveyor line, as specified elsewhere in this specification. Start-up and Fault Warning Alarm(s) location and function shall be consistent with the specified requirements indicated elsewhere in this document.

3.) Merge Control functions associated with the conveyor lines' 45° merge conveyors shall be compliant with the specified requirements described elsewhere in this document. The CL1 line shall be considered as the Primary Line and the CL2, CL3, CL4, and CL5 as the Secondary lines.

5. Clear Bag Subsystem CL2

a. General

1.) This subsystem consists of conveyor segments CL2-01 through CL2-05 and merge onto CL1 for transport of clear baggage from the EDS2 for eventual sortation and baggage make-up via Sortation Line 1 (SL1) subsystem.

b. Control System Components

1.) The following description for the CL2 clear bag line and related sequence of operation is provided as an example; detailed control functionality shall be coordinated with the City of El Paso and the TSA through the design review meeting and submittal review process. The CL3 clear bag line shall operate in a similar manner.

2.) Provide the necessary control stations with their respective control devices and functions for the CL2 conveyor line to accommodate the requirements relating to the Fire Door operation, Jam Reset Control Function and Emergency Stop/Reset Controls.

c. Controls Functions

1.) There will be no manual start/stop controls for the conveyors in these subsystems. All conveyors will operate by means of auto start/stop circuits.

2.) Start-up alarms and fault alarms shall be located as required, along the conveyor line, as specified elsewhere in this specification. Start-up and Fault Warning Alarm(s) location and function shall be consistent with the specified requirements indicated elsewhere in this document.

3.) Merge Control functions associated with the conveyor lines' 45° merge conveyors shall be compliant with the specified requirements described elsewhere in this document. The CB2 line shall be considered Secondary Line to the CL1 line.

6. Clear Bag Subsystem CL5

a. General

1.) This subsystem consists of conveyor segments CL5-01 through CL5-07, for transport of CLEAR baggage from the CBRA to the clear bag subsystem CL1 for eventual sortation and baggage make-up via Sortation Line 1 (SL1) subsystem.

b. Control System Components

1.) The following description for the CL5 clear bag line and related sequence of operation is provided as an example; detailed control functionality shall be coordinated with the City of El Paso and the TSA through the design review meeting and submittal review process.

2.) Three (3) control stations shall be provided on a stanchion for Start/Stop control of this conveyor line, at the input end, midpoint and discharge end of the CL5 load conveyor (CS/CL5-01), for the initial start-up of the conveyor line. The location of these control stations and related stanchions shall be coordinated with the City of El Paso and the TSA.

3.) The control station at the input end of CL5-01 shall control station shall control the operation of the CL5 conveyor line conveyors. This Control Station shall include the following operators/control devices:

a.) CS/CL5-01A/SPB: Illuminated GREEN momentary contact pushbutton switch: Actuation of the subsystem's illuminated start pushbutton shall energize the respective Visual/Audible warning alarms along the conveyor line, both at the input end and along the conveyor line for 10 seconds (adjustable). The subsystem's Reset/Start pushbutton shall flash, indicating imminent system start-up. After the 10 second "Run" alarm period, conveyors CL5-01 through CL5-07 shall start and the System Start pushbutton's flashing indication shall change to a steady burning signal.

b.) CS/CL5-01A/PBS: Flush-head RED momentary contact pushbutton switch. The controls for the System Normal "Manual" Stop shall stop conveyor segment CL5-01, upon activation of the pushbutton and a time-out sequence to allow the conveyor segment to be clear of any baggage. The remaining downstream conveyors shall stop via an "Auto-Stop" circuit, as specified elsewhere in the document.

c.) CS/CL5-01A/ALM: Sonalert warning alarm: Start-up warning alarm for the CL5 subsystem.

d.) CS/CL5-01A/EPB: Illuminated RED maintained contact mushroom-head emergency stop pushbutton switch: Upon activation of the pushbutton, the respective indicator light shall illuminate in a steady burning mode. The control system shall stop conveyor segments CL5-01 through CL5-07 and sound the associated subsystem warning alarms. Resetting of the E-stop condition shall be consistent with the System Control Requirement of this specification. The location of the Emergency Stop control stations and related E-stop Zones shall be coordinated with the City of El Paso.

4.) The CL5 control station at the discharge end of CL5-01 conveyor shall also control the operation of the CL5 conveyor line conveyors. This Control Station shall include the following operators/control devices:

a.) CS/CL5-01B/SPB: Illuminated GREEN momentary contact pushbutton switch: Shall operate similar to CS/CL5-01/SPB, as noted above.

b.) CS/CL5-01B/PBS: Shall operate similar to CS/CB2C-01/PBS, as noted above.

c.) CS/CL5-01B/ALM: Sonalert warning alarm: Start-up warning alarm for the CB2C subsystem.

d.) CS/CL5-01B/EPB: Illuminated RED maintained contact mushroom-head emergency stop pushbutton switch: Shall operate similar to CS/CL5-01/EPB, as noted above.

5.) The CL5 control station at the discharge end of CL5-02 shall control the operation of the CB2C conveyor line conveyors. This Control Station shall include the following operators/control devices:

a.) CS/CL5-02/SPB: Illuminated GREEN momentary contact pushbutton switch: Actuation of the subsystem's illuminated start pushbutton shall energize the respective Visual/Audible warning alarms along the conveyor line, both at the input end and along the conveyor line for 10 seconds (adjustable). The subsystem's System Start pushbutton shall flash, indicating imminent system start-up. After the 10 second "Run" alarm period, conveyors CL5-01 through CL5-07 shall start and the System Start pushbutton's flashing indication shall change to a steady burning signal. The remaining CB2 downstream conveyors shall also start via the start pushbutton (if not already running).

b.) CS/CL5-02/PBS: Flush-head RED momentary contact pushbutton switch. The controls for the System Normal "Manual" Stop shall stop conveyor segment CL5-01, upon activation of the pushbutton and a time-out sequence to allow the conveyor segment to be clear of any baggage. The remaining downstream conveyors shall stop via an "Auto-Stop" circuit, as specified elsewhere in the document.

c.) CS/CL5-02/LTW: Illuminated WHITE over-height indication light: This indicator light shall signify, by a steady burning indication, an over-height bag condition at the discharge end photocell (i.e., PE/CL5-01) of conveyor CL5-01. The indicator light's steady burning indication shall change to a flashing signal when the over-height condition has been cleared, signifying that the fault is clear for the system reset, and shall extinguish only upon the restart of the conveyors, which shall be performed by actuating the system local start pushbutton.

d.) CS/CL5-02/ALM: Sonalert warning alarm: Start-up warning alarm for the CL5 subsystem.

e.) CS/CL5-02/EPB: Illuminated RED maintained contact mushroom-head emergency stop pushbutton switch: Upon activation of the pushbutton, the respective indicator light shall illuminate in a steady burning mode. The control system shall stop conveyor segments CL5-01 through CL5-07 and sound the associated subsystem warning alarms. Resetting of the E-stop condition shall be consistent with the System Control Requirement of this specification. The location of the Emergency Stop control stations and related E-stop Zones shall be coordinated with the City of El Paso.

6.) Provide the necessary control stations with their respective control devices and functions for the CL5 conveyor line to accommodate the requirements relating to the Fire Door operation, Jam Reset Control Function and Emergency Stop/Reset Controls.

c. Controls Functions

1.) Subsystem Initial Start-up at Input Conveyor ("Manual Start"):

a.) Actuation of the Subsystem's Start pushbutton shall cause the control device (PB) to flash and energize the conveyor line's Visual/Audible warning alarms along the conveyor line right-of-way, both in the public space and air side, for 10 seconds (adjustable). The flashing of the illuminated pushbutton shall signify imminent start-up of subsystem. After start-up warning alarm period, all of the conveyor segments of this line shall start sequentially from the output (45° merge) to the input CL5-01 with an appropriate delay between each motor starter actuation to ensure electrical power surges are minimized. The start pushbuttons will also cause the respective collection conveyors on the CB2 line to start, if not already running. Upon successful start-up of the subsystem, the flashing indication of the pushbutton shall change to a steady burning signal.

2.) Automatic System Cascade Stop:

a.) All conveyor segments shall have the capability to shutdown via an "Auto-Stop" sequence. Provide a photocell upstream of each conveyor segment and program the auto-stop circuit to stop the conveyor line (i.e., CL5-01 through to the 45° merge) whenever the auto stop photocell does not sense a bag for 5 to 30 minutes (adjustable). The same photocell may control both "Auto Start" and "Auto Stop" functions.

3.) Start-up alarms and fault alarms shall be located as required, along the conveyor line, as specified elsewhere in this specification. Start-up and Fault Warning Alarm(s) location and function shall be consistent with the specified requirements indicated elsewhere in this document.

4.) Jam Reset and Emergency stop control station(s) location and function shall be consistent with the specified requirements indicated elsewhere in this document. The Jam Reset and Emergency stop station(s) that will be associated with the CL5 line's conveyors shall be located adjacent to the conveyor drive and positioned so that they are accessible by maintenance personnel.

5.) Over-Height / Over-Length Detection:

a.) An over-height and an over-length photocell shall be provided at the discharge end of CL5-01; their respective indicator lights shall be located at the discharge end of CL5-01. Interruption of the photocells shall immediately stop conveyors CL5-01 and CL5-02, and illuminate the respective indicator light on the control station; the associated indicator light shall signify, by a steady burning indication, an oversize bag condition which shall change to a flashing signal once the fault condition has been cleared. The conveyor shall be restarted by repositioning or removing the bag, and pressing the RESET/START pushbutton.

6.) Control Functions associated with the subsystem's Cascade Stop, Jam Detection/Restart, Emergency Stop/Reset, Motor Overload conditions and respective Alarm Silence function(s) shall be compliant with the specified requirements described elsewhere in this document.

J. Sortation Line Subsystem SL1

1. General

a. The CL1 subsystem feeds the SL1 Sort line. The Sort Line will contain an ATR for linking outbound originating bags and bags from the transfer line to their designated make-up device. By means of High-Speed Paddle Diverters on the SL1, bags shall be diverted from the sort line for access to any of the four (4) sort outputs.

b. Bags arriving from the referenced input areas shall have bag tags attached, which shall contain machine-readable bag tags. The Main Sort Line shall accept the bags from the outbound transport line and pass them through the Automatic Tag Reader. The information from the scanner will be sent to the PLC/Control System where it will be matched to a particular record in a flight table to determine its sort pier/device destination.

c. The make-up device (MU1 through MU4) and associated conveyors shall start through the ATR/control system when a bag is destined for that make up device, if not already running.

2. Control System Components

a. Provide the necessary Control Stations with their respective control devices and functions along the conveyor lines for the subsystem's Jam Reset Control Function, Emergency Stop Control/Reset, High-Speed Paddle Diverter local Control Stations.

3. Control Functions

a. There will be no manual start/stop controls for the conveyors in this subsystem other than local sort device controls, as specified. All conveyors will operate by means of auto-start/stop circuits.

b. All bags transported along the SL1 shall have their positions continually updated in order to ensure that they will be diverted to the proper destination. Pulse generators and, if necessary, additional photocells will be provided to ensure proper tracking throughout the system.

c. A photocell will be provided immediately upstream of the HSPD to synchronize HSPD operation with bag position. The controller will take into account the length of each bag being diverted to ensure that the HSPD will extend prior to the leading edge of the bag.

d. A sensor shall be located at the home position of the HSPD to confirm that it has completed its cycle in a reasonable time and that the HSPD is clear of normal baggage flow. If the sensor signals a possible interference, it shall be considered a jam detection, which is specified elsewhere in this document.

e. Start-up Sequence

1.) The normal start-up operations of the SL1 conveyors is governed by an auto-start circuit and is controlled by separate photocells; located on each input line (i.e., CL1 and CL5). The photocells shall be located far enough upstream of each input line, to allow the sort line conveyors to come up to speed before baggage arrives. When a bag is detected at the input line's photocell(s), the sort line conveyors - associated with that input - shall start (if not already running) sequentially beginning with the first sort line conveyor segment relative to the input line.

f. Shut-down Sequence:

1.) The SL1 conveyors of this subsystem shall shut-down through an auto-stop circuit which will time-out and immediately stop all conveyors if, after a 15 minute period (adjustable), no bags have been detected by the auto-start circuits and all baggage have cleared the train of conveyors.

4. Control Equipment Components

a. Provide a minimum of four "Re-start" Pushbutton control stations - two on each operational side of the inclined plate make-up devices - for Manual Start-up operation of the make-up device. The “Re-start” pushbuttons may be combined with the E-stop or Jam Reset Control Stations. In case the make-up device times out before all baggage has been sorted, activation of any restart button on the make-up device shall cause the device to run for an additional twenty (20) minutes (adjustable) without the feed conveyors operating.

b. Install in close proximity to each of the drive units a control station with a Maint/Auto switch and a jog pushbutton for use by maintenance personnel only. When the switch is in the maintenance position, the device can move (jog) in the forward direction only when the jog pushbutton is held in.

c. Provide the necessary Jam Reset Control stations and Emergency Stop Control/Reset Stations with their respective control devices and functions as required around the perimeter of the make-up device to satisfy the specified requirements for E-stops and bag jam resets.

5. Control Functions

a. There will be no manual start/stop controls for the conveyors in these subsystems other than local makeup device controls, specified above. All conveyors, including the initial start-up of the make-up device(s) shall operate by means of auto-start/stop circuits.

b. The baggage system control circuitry shall be designed to assure that the make-up device is running at full speed prior the start-up of any feed conveyors.

6. All bags transported along the Sort Line (SL1) shall have their positions continually updated in order to ensure that they will be diverted to the proper destination. Pulse generators and, if necessary, additional photocells will be provided to ensure proper tracking throughout the system.

7. A photocell will be provided immediately upstream of the HSPD to synchronize pusher operation with bag position. The controller will take into account the length of each bag being diverted to ensure that the pusher will contact the center of the bag.

8. A sensor shall be located at the home position of the HSPD to confirm that it has completed its cycle in a reasonable time and that the pusher is clear of normal baggage flow. If the sensor signals a possible interference, it shall be considered a jam detection, which is specified elsewhere in this document.

K. Sortation Controller Operational Provisions

1. General

a. The following is a compilation of the many sort decisions and carrier routing decisions the BHS Computer/Control System shall encounter in day-to-day activity. Each one requires a different course of action; therefore ensure that the system as installed shall accommodate the desired response.

1.) Standard Sortation:

a.) The ATR shall decode the bag tag and provide the information to the BHS Computer necessary for the controls to initiate the appropriate diverters to: divert baggage to the designated sort output (i.e. flat plate make-up device)

3.09 SPECIAL CONTROLS CONSIDERATIONS

A. Laptop Computers

1. Provide to the City of El Paso one (1) laptop computer. The laptop is to be loaded with all applicable PLC manufacture software programs and the BHS system as-built ladder logic programs required to maintain the BHS system.

2. Submit to the City of El Paso or its representative, the laptop manufactures literature for approval prior to the purchase of these items.

3.10 CONSTRUCTION PHASING SEQUENCE

A. General

1. The BHS installation and associated replacement of the existing systems will be required to be completed in phases. The BHS scope of work will be in accordance with an overall project phasing sequence. Reference attached BHS phasing plans and overall program phasing plans (i.e., B6.XX series). Coordinate all work with the Program Manager, other disciplines working in the immediate area of construction, airline flight schedules and hours of operation, so as not to impact the Terminal's normal functions and concurrent airline operations.

2. The BHS implementation staging is of vital importance to the success of the BHS installation of the new conveyor equipment and replacement of the existing subsystems. Installation of the new conveyor equipment and removal/replacement of the existing equipment will occur simultaneously with on-going airline operations. The new conveyor system and the replacement of the existing subsystems will increase the existing outbound operational capacity, as illustrated on the accompanying drawings, and it is therefore vital that the outbound baggage make-up area continue to process baggage throughout the implementation period without operational disruption or capacity reduction.

3. Schedule and coordinate the BHS Scope of Work (installation, removal, refurbishment, and interim connections), in accordance with the phasing sequence indicated by the projects overall phasing plan and the phasing sequence described herein. Coordinate all work with the City of El Paso’s Program Manager, other disciplines working in the immediate area of construction, airline flight schedules and hours of operation, so as not to impact the Airport's normal functions and concurrent airline operations.

4. Short duration system shutdown will be permitted for the changeover from the existing subsystem configuration to the new. Shutdown of the system during changeover shall be scheduled during times of low impacted terminal operating demands. The contractor shall check and field-verify actual site conditions to determine and coordinate the schedule for any shutdown period. Notify the respective carrier(s) 72 hours in advance and obtain approval before proceeding with the shutdown of the system(s).

5. The majority of the BHS work within the departures level and arrivals level ceiling space shall be performed during the third shift period, so as not to impact airline concurrent operations. However, all work associated with the outbound sort system will be available for all shifts, as dictated by the project’s overall phasing plan. Transfer all of the necessary construction material, conveyor equipment, tools, and components required for the implementation of the BHS to and from the designated Lay-Down areas during the work period. All Airline operational areas associated with the BHS work shall be left broom clean at the end of the Contractor's shift without any equipment, tools, or components left in the area. BHS construction material,

equipment and tools/components will be permitted in the immediate area of construction only during the contractor's work period/shift.

6. Existing BHS equipment indicated for removal shall be removed, salvaged and turned over to the City of El Paso. Storage of the salvaged components shall be coordinated with the construction manager and the City of El Paso in compliance with the specified requirements of this section (Part III). Equipment shall be turned over to the City of El Paso Airport Operations and transferred to the designated area within a 5-mile radius of the Airport Property. Dispose any equipment not desired by the Owner, in compliance with the specified requirements of this section (Part III).

7. Reference the overall program phasing plans (i.e., B6.XX series) and the following BHS Phasing plans. As specified elsewhere, submit as part of this proposal the best duration period, per phase, that will require completing the specified work.

8. Phasing shall occur in the order that least impacts customer service and operational considerations. This will be determined during design review meetings in conjunction with other construction and installation phasing. The following describes general expectations and tentative order of events for the project. The BHSC shall provide the final/detailed installation phasing sequence schedule and drawings package for approval by the Owner during the design review and documentation submittal review process.

   a. Overview (REF: B6.00, B6.01)

      1.) The new main terminal outbound baggage handling system (BHS) phasing plan will be accomplished by installing a temporary screening and make-up operation located on the west side of the airport. During the construction of the temporary system the existing main terminal BHS will be maintained and operational.

      2.) EPIA decided it preferred separating the required operational aspects of the BHS from the planned construction area after several phasing approaches utilizing portions of the existing and/or new BHS were considered. EPIA felt the separation of these activities simplified the overall phasing for the baggage handling system contractor (BHSC), prevented more complex and lengthy construction activities required for the main terminal renovation and limited the impacting to current BHS operations.

      3.) Once the temporary screening and make-up operation is completed and commissioned, the existing main terminal BHS equipment may be demolished. Additionally, the existing EDS machines and associated equipment may be decommissioned as well. After the demolition and decommissioning activities of the existing system are complete the new construction for the buildings may occur. When the new building construction is complete the BHSC can install the new BHS which includes conveyors and equipment for the CBIS, CBRA, Sort Area and ticketing/curbside conveyors.

      4.) The main terminal renovation is planned in the following manner for the BHS portion of this project.

   b. Phase 1: Temporary BHS (REF: B6.02, B6.03)

      1.) The work in Phase 1 will be completed prior to work conducted for the remaining phases of this project. It includes the preparatory work of adding temporary input conveyors, feed conveyors and a make-up device to process screened/cleared bags from the temporary screening operation. This work allows the tenant airlines to operate while construction is undertaken on areas where BHS operations are currently assigned. There is no expected impact to airline or TSA operations during this phase. During this preparatory installation the existing BHS will remain in service.

2.) Specifically, the work consists of the delivery/relocation, installation and commissioning of four (4) lobby EDS screening devices and associated equipment for the temporary processing of all ELP terminal checked baggage. These stand-alone EDS machines will be located on the west side of the airport and will be installed around the footprint of an existing flat plate claim device. The inbound claim device is being repurposed for lobby screening activities to allow the transport of cleared bags screened by TSA to the secure side of the airport. The building area surrounding this claim device will be modified to provide walls, ingress/egress out of the space and other necessary elements to ensure a secure and functional space is available for EDS screening and bag staging for unscreened bags.

3.) Once cleared bags from the stand-alone EDS are placed on the inbound claim device they are transported to the secure side and then transferred by bag handlers to temporary conveyor that feeds a temporary make-up device. The make-up device is sized to allow sufficient cart staging and tug circulation for the tenant airlines. A versa view monitor will be installed on the temporary MCP to provide localized monitoring and reporting of the temporary BHS equipment for maintenance and operational staff.

Airlines	Area	Check-in	Input	EDS Screening	Make-Up Unit	Outbound Oversize
American Airlines	Main Term	*TC1*	*TC1*	*Stand-Alone*	N/A	N/A
United Airlines	Main Term	*TC3*	*TC3*	*Stand-Alone*	N/A	N/A
Southwest Airlines	Main Term	*TC5, CS4*	*TC5, CS4*	*Stand-Alone*	MU-SW	N/A
Delta Airlines	Main Term	*TC6*	*TC6*	*Stand-Alone*	N/A	N/A
Note: Existing equipment is in italics						

c. Phase 2: Demo Existing BHS and Install CBIS (REF: B6.20)

1.) Once Phase 1 has been commissioned and operational unscreened bags will be checked-in at the existing ticket counter areas in the main terminal but then transported by the passengers to the new temporary screening and make-up operation located on the west side of the airport.

2.) At the beginning of this phase Delta airlines will also relocate from their current ticket counter the abandoned in place TC4 located between column lines CL16/18.

3.) The initial work in Phase 2 will decommission all of the existing EDS machines and associated EDS equipment. This work will also focus on the demolition of all existing BHS equipment including ticket counter and curbside conveyors up to the fire/security doors on the secure side of the airport. The load belts for ticket counters and curbside conveyors will remain intact until Phase 3 and Phase 4 when they will replaced as part of the ATO airline tenant improvements with the exception of those conveyor east of CL21.5 which can be demolished due to the relocation of Delta at the beginning of the phase.

4.) The remaining work for Phase 2 will involve the installation of the new CBIS conveyors and equipment which includes: pre-CBIS ATR, outbound oversize conveyors north of gridline B, TC5, portions of CS4, CBRA equipment, delivery of four (4) L3 3DX 6700 EDS machines, construction of the OSR room and construction of the BHS control room.

Airlines	Area	Check-in	Input	CBIS	Make-Up Unit	Outbound Oversize
American Airlines	Main Terminal	*TC1*	TML	Temporary Stand-Alone	TMU1	N/A
United Airlines	Main Terminal	*TC3*	TML	Temporary Stand-Alone	TMU1	N/A
Southwest Airlines	Main Terminal	*TC5, CS4*	TML	Temporary Stand-Alone	TMU1	N/A
Delta Airlines	Main Terminal	*TC4*	TML	Temporary Stand-Alone	TMU1	N/A
Note: Existing equipment is in italics						

d. Phase 3: Install Sort Area (REF: B6.30)

1.) Phase 3 will involve the construction of the sort area which includes: the sort mainline, outbound sort ATR, make-up feed conveyors, four (4) flat plate make-up devices and the sort control and reporting/monitoring system for the new BHS and CBIS.

2.) Demolition of the load belts in the ATO for Delta and Southwest will occur along with the demolition of the existing curbside conveyors traveling in the tunnel.

3.) A portion of this phase is also dedicated to the formal testing of the new CBIS. All SAT, Pre-ISAT, Internal, TRR and ISAT/SSTP testing will be performed during non-operational hours.

Airlines	Area	Check-in	Input	EDS Screening	Make-Up Unit	Outbound Oversize
American Airlines	Main Terminal	*TC1*	TML	Temporary Stand-Alone	TMU1	N/A
United Airlines	Main Terminal	*TC3*	TML	Temporary Stand-Alone	TMU1	N/A
Southwest Airlines	Main Terminal	*TC5, CS4*	TML	Temporary Stand-Alone	TMU1	N/A
Delta Airlines	Main Terminal	*TC4*	TML	Temporary Stand-Alone	TMU1	N/A
Note: Existing equipment is in italics						

e. Phase 4: Demo Existing TC and CS and Install New (REF: B6.40)

1.) This phase may be concurrent with Phase 2 and Phase 3 if coordinated and approved with the owner and tenant airlines to expedite the completion of the project. It is anticipated the load belts for ticket counters TC1, TC2 and TC3 will be demolished during this phase. Ticket counters TC1, TC2, TC3, TC4 and curbside conveyor CS4 will be replaced and commissioned with new equipment and control. The exact sequence will be determined during the required design review meetings during this project.

Airlines	Area	Check-in	Input	EDS Screening	Make-Up Unit	Outbound Oversize
American Airlines	Main Terminal	*TC1*	TML	Temporary Stand-Alone	TMU1	N/A
United Airlines	Main Terminal	*TC2*	TML	Temporary Stand-Alone	TMU1	N/A
Southwest Airlines	Main Terminal	*TC4, CS4*	TML	Temporary Stand-Alone	TMU1	N/A
Delta Airlines	Main Terminal	*TC3*	TML	Temporary Stand-Alone	TMU1	N/A
Note: Existing equipment is in italics						

f. Phase 5: Final Configuration (REF: B6.50)

1.) The project will end once all construction in the main terminal is completed and commissioned and all of the updates to the new sort control and reporting/monitoring systems are made. Operations for TSA staff and all airlines will settle into their final assignments for the new BHS. Upon approval, the stand-alone EDS devices in the inbound claim hall will be removed at the end of the 30 day required observation period. The existing claim device used to transport cleared bags from non-secure to secure side will also be available for inbound operations when all EDS and associated screening equipment is decommissioned and/or demolished.

Airlines	Area	Check-in	Input	EDS Screening	Make-Up Unit	Outbound Oversize
American Airlines	Main Terminal	TC1	TC1	New CBIS	MU1	OS1
United Airlines	Main Terminal	TC2	TC2	New CBIS	MU2	OS1
Delta Airlines	Main Terminal	TC3	TC3	New CBIS	MU3	OS1
Southwest Airlines	Main Terminal	TC4, CS4	TC4, CS4	New CBIS	MU4	OS1
New Carrier	Main Terminal	TC5	TC5	New CBIS	TBD	OS1

3.11 DEMOLITION/EQUIPMENT REMOVAL

A. Maintain Operations

1. Remove existing equipment indicated on the Contract Drawings as "To Be Removed". All conveyor equipment and related components shall be removed with care, to enable the salvaging of components for the City of El Paso's Maintenance Group's spare parts inventory. Inform the City of El Paso that the equipment has been removed and is available for review to determine what shall be salvaged and what shall be disposed; coordinate this process with the City of El Paso and their Maintenance Group. Maintain operation of unaffected baggage handling equipment through the implementation of temporary electrical connections or the addition of supports to replace connections or supports removed in the demolition process.

2. If the removal of equipment creates unsecured access to a secured area, provide a guard on a 24-hour per day basis until installation of equipment returns the area to secured status.

B. Conduit Removal

1. Remove conduit including junction boxes and control/wiring devices rendered unused by the demolition process in its entirety to the motor control panel. Exception: abandon in place the imbedded portion only of any imbedded conduit after removing all conductors. Where a conduit passes through a floor or wall, cut the unused conduit flush with both surfaces of such floor or wall and abandon the section within the floor or wall if it cannot be removed without breaking masonry. Ensure that any area where material has been cut away is left in a clean and flush condition with no holes or protrusions showing. Where removal creates an indentation in concrete, chip away the surrounding concrete, cut the material (e.g., anchor bolts, conduit) below floor level and fill flush with cement.

C. Support Steel Removal

1. Remove support steel including header beams and attachments rendered unused by the demolition process in their entirety. Remove anchor bolts flush with floor, wall, or ceiling by burning or cutting.

3.12 SALVAGED EQUIPMENT TO BE STORED

A. General

1. Remove equipment or other items designated to become the property of the City of El Paso with care.

B. Equipment Salvage

1. Salvage equipment indicated on the Contract Drawings as being removed for salvage. Disassemble such equipment by removing nuts and bolts, screws or other fasteners. Cut or burn only those sections welded as part of the initial assembly operation that are too large to move through existing doorways and openings or too large to be moved by stake-body trucks with or without oversize permits.

2. The City of El Paso's Maintenance Group intends to salvage the following types of components for spare parts: motors, gearboxes, bearings, belting, field control components, head rollers, tail rollers, return rollers, control stations, photoeyes and associated mounting brackets, tachometers, and MCP control components. Remove/disassemble such components from their respective conveyor segment assembly (or MCP) with care, box/package each item, label and log it in a master log (i.e., Microsoft Excel log format) for formal turn over to the City of El Paso's Maintenance Group. Prepare a sign-off transmittal indicating what equipment has been turned-over, the Contractor's representative who turned the equipment over, the City of El Paso's Maintenance Group's representative who accepted the equipment and the date the equipment was turned over.

C. Equipment Storage

1. Store removed, refurbished and relocated equipment in a weather-tight enclosure to guard against weather and vandalism. Be responsible for any and all costs associated with the transportation and storage. The equipment shall be stored until the time of Final Acceptance. At that time, it will be the City of El Paso's responsibility for storage and transportation. The City of El Paso or its representative shall coordinate the determination of the equipment to be stored, as well as storage location.

3.13 DEMOLISHED MATERIALS TO BE DISPOSED

A. General

1. Remove and dispose of any materials or items demolished and not designated to become the property of the City of El Paso or to be reinstalled.

B. Equipment Disposal

1. Remove from Airport site all debris, rubbish and other materials resulting from demolition and alternation operations on a daily basis. Transport and legally dispose of equipment off-site in legal landfills or scrap yards. Obtain written permission from the property City of El Paso on whose property the removed materials shall be placed, and submit a copy of the agreement to the City of El Paso.

2. Burning of removed materials is not permitted on the project site.

3. Store materials, which cannot be removed daily in areas specified by the City of El Paso.

4. Do not store or sell removed items on-site.

3.14 REMOVED AND RELOCATED EQUIPMENT

A. General

1. Remove and relocate equipment so indicated on the Contract Drawings. Disassemble such equipment by removing nuts, bolts, screws, or other fasteners with the use of hand tools. Cut only those sections welded as part of the initial assembly operation that are too large to move through existing doorways and openings or too large to be moved by stake-body trucks with or without oversize permits.

2. Ensure disassembly, transportation, refurbishing and storage of this equipment in a manner to enable reassembly of the equipment in its final location in like-new condition. Supply in the bid form an itemized list of all labor and the materials required to restore the refurbished equipment to like-new condition (such as but not limited to paint, electrical components and mechanical components).

3.15 OPERATION AND MAINTENANCE TRAINING

A. General

1. Instruct and train the City of El Paso operating and maintenance personnel at the work site. Conduct this training prior to Conditional Acceptance of each phase of the work and ensure competence in the operation and maintenance of the new equipment and the system/subsystems.

2. Training is to be provided by a professionally qualified instructor. Use of site supervisors, equipment or system designers as an instructor for the formal training will not be accepted unless approved by the City of El Paso or its representative.

3. Furnish all tools, equipment, materials and supplies, and perform all functions and services required to complete the training as specified. With the exception of safety and overview training, training shall be divided into separate categories for operations training and maintenance training further broken down to specific trades.

4. No actual operations training of a piece of equipment will be permitted until the equipment is properly installed and is operational.

5. A detailed outline of the proposed training to be conducted shall be submitted to the City of El Paso or its representative for review and approval in accordance with the schedule of submissions prior to the testing of the system. The training program submittal shall include, at a minimum, the following information for review:

   a. Types and durations of training/classes.

   b. Name and professional credentials for each instructor/trainer.

   c. Max/min number of persons allowed per class.

   d. Any specialty type of requirements such as classroom/conference room space, VCR/DVD player, TV, or white board (to be coordinated with the City of El Paso however the Owner is not responsible to supply the above mentioned space or materials)

   e. Copies of all training materials, to be used during training. All training binders/materials shall be submitted for review in the format in which they will be used during the on-site training. It should be noted that the O&M manuals will not be allowed to be used for training purposes; however consolidated sections of the O&M manuals which have been tailored for classroom training are permitted.

6. Times and duration of the classes may involve irregular hours in order to provide training of the operational and maintenance personnel on different shifts.

7. All training sessions will be monitored and approved by the Owner. Any session or portion thereof deemed unsatisfactory, based on evaluation of the training, and shall be repeated by the BHS Contractor or the BHS Contractor's representative at no additional cost to the City of El Paso.

8. Develop and maintain a training attendance record for all operation and maintenance training sessions presented. The record is to note the following information in duplicate form. The original copy of the record is to be forwarded to the City of El Paso with the second copy being retained by the BHS Contractor for his files. The recorded training information must include for each session:

    a. Date of training session

    b. Name of project

    c. Name of Instructor

    d. Subject of training

    e. Time of training session

    f. Signature and department of each attendee

9. Provide the City of El Paso with two (2) copies and the Local TSA with one (1) copy of the video recording of one (1) complete operational and maintenance training class for this project. The video recording shall be provided to the City of El Paso / Local TSA in a media acceptable to the City of El Paso.

B. Operational Training

1. Provide formal instruction of the City of El Paso's operational personnel at the site who will be charged with operation of the BHS. Include a description and on-site demonstration of the electrical controls and their operation, modes of operation, the operating limitations of the equipment and the safety devices and their functions.

2. Minimum requirements for Operational Training shall include, but not be limited to, the following:

    a. Bag placement on load conveyors.

    b. Tub usage and loading.

    c. Operating procedures for all BHS/CBIS conveyance equipment.

    d. BHS equipment within the CBRA.

    e. CBIS failsafe procedures and layout – including responsible party for clearing failsafe(s), as coordinated with local TSA.

    f. Provide description of the BHS Control Interface with CBIS.

    g. System Safety procedures, including lock-out and Tag-out requirements.

    h. Bag Jam Clearing procedures, as coordinated with the Airport's O&M group and local TSA.

    i. Sensitive Security Information (SSI) Training for any BHS/CBIS related reports that are classified as

SSI; this training shall comply with government SSI guidelines as per the TSA's PGDS, Appendix H.

3. All operations or individuals with access to either viewing or printing reports shall also be trained in SSI procedures (as coordinated with the TSA) prior to operation. These training sessions shall be conducted prior to the operational start-up of the respective BHS/CBIS.

4. Provide a minimum of two (2) - 8 hours of operational training classes to be coordinated with the City of El Paso for this project.

C. TSA Training

1. Provide operations training to the local TSA personnel for mechanical, electrical and computer functions as required to properly and safely operate the TSA staffed portions of the system e.g. CBRA and OSR room.

2. Training shall include but not be limited to the following:

   a. All BHS equipment provided in the CBRA room.

   b. All BHS equipment provided in the on-screen resolution room (OSR).

   c. BHS Control interface provided so the TSA agent can conduct the Operation Test Kit (OTK) procedure (Formally - Image Quality Test - IQT) procedure.

   d. CBIS orientation, layout and description of operation.

   e. CBIS failsafe procedures, layout and including responsible party for clearing failsafe.

   f. Bag jam clearance procedures as coordinated with Authority's O&M group and local TSA.

   g. Bag jam clearance procedure within the EDS device (Training to be provided by the EDS OEM).

   h. BHS Contractor shall provide SSI training for the BHS reports that are classified SSI. The training must abide with government SSI guidelines (ref PGDS Appendix H).

3. Training material and documentation is to be submitted to the TSA via the Owner for review prior to the first scheduled training class.

4. Provide the Owner and the local TSA with two (2) copies of the video recording of one (1) complete TSA training class for this project. The video recording shall be provided to the Owner/Local TSA in a media acceptable to the Owner (USB Flash Drive).

5. Provide a minimum of two (2), eight (8) hour classes for TSA training to be coordinated with the Local TAS supervisor.

6. All formal training sessions must be completed prior to commissioning, compliant with the latest PGDS version (5.0).

D. Maintenance Training

1. Provide formal training of the BHS maintenance personnel with the objective of preparing the employees to perform the required preventive maintenance to minimize breakdown and to perform necessary repairs when work stoppages or breakdowns of the equipment occur. The training shall include, but not limited to the

following:

a. Preventive and corrective maintenance procedures, including replacement of parts; lubrication quantities, types, frequencies and application points; and an estimate of the time to perform such procedures.

b. Special tools, techniques, or procedures required for either preventative or corrective maintenance of the equipment, or it's auxiliary or support components.

c. Procedures to perform adjustments required for alignment, wear and calibration for all preventative and corrective maintenance, and an estimate of time required to perform such procedures.

d. Assembly and disassembly procedures, including parts lists required for appropriate and corrective maintenance. Models, "exploded" views, and audiovisual materials shall be used for training. These materials shall be handed to the Engineer upon completion of training. Hands on field training shall be provided, subject to the approval of the Owner.

2. The formal training shall consist of classroom and on the equipment training, as required to properly train personnel for each shift, prior to the start of operation. The training must cover all aspects of the electrical and mechanical equipment provided in this project. The electrical aspects shall include but not be limited to, electrical controls and control systems and PLC control systems.

3. On-site training shall be scheduled to commence immediately following classroom training and shall stress hands-on performance based application of the classroom training. Equipment shall be started and relevant systems and components shall be demonstrated.

4. Off-site training, primarily for the technical trades e.g. electricians, controls technicians; mechanics shall focus on specialized, technical training and shall be provided by the manufacturer at their factory or training facility. In the event the City of El Paso requests specialized factory training on a particular piece of equipment, make arrangements with the applicable manufacturer to provide such training.

5. Provide maintenance training for any specialized equipment used in the related system that is not of the BHS Contractor's design or manufacture. The qualified representatives will present such training, from the manufacturer of the specialized equipment.

6. Provide a minimum of two (2) 8 hour classes for maintenance training to be coordinated with the airport.

7. Examples of specialized equipment and other BHS maintenance related training include, but are not limited to those items listed below:

   a. Safety Procedures including Lock out/Tag-out

   b. Operation and Maintenance Manual use

   c. Warranty Procedures

   d. System Preventative Maintenance

   e. Jam Clearance Procedures

   f. Failsafe Procedures and Clearance

g. EDS/BHS System Interface and Troubleshooting

h. Power Turns

i. Flat Plate devices

j. 45 Degree Merge conveyor

k. HSPDs

l. Vertical Sorter conveyor

m. Fire/Security Doors

n. Automatic Tag Readers (ATRs)

o. Programmable Logic Controller Systems including basic ladder programming techniques

p. Computer Systems Equipment

q. Interfaces to the City of El Paso Networks

r. Problem Resolution Screens

s. Contingency Plans

t. Configuration Management Plans and Procedures

u. System Reports

v. MDS and MIS Systems including development of both new and modifying existing reports, adding new or modifying existing conveyor subsystems with associated fault annunciation to the graphic/text displays.

E. Supplemental Training

1. If the City of El Paso requires supplemental training beyond that specified above, the BHS contractor shall provide such training at rates as mutually agreed upon between the City of El Paso and the BHS Contractor.

- END OF PART III -

PART IV - QUALITY CONTROL SPECIFICATIONS

4.01 FIELD QUALITY CONTROL

A. Quality Control Manual

1. Provide a Quality Control Manual acceptable to the City of El Paso or its representative.

2. Indicate inspection lists and methods that will be utilized for quality control inspection and testing to confirm compliance with the specified requirements.

3. The Quality Control Manual shall assure that there is a system for final inspection and testing of completed products, construction and installation. Such testing shall provide a measure of the overall quality of the completed product and shall be performed so that it simulates product end use and function. Final inspection and testing shall provide for reporting to the City of El Paso or its representative any difficulties, deficiencies, or questionable conditions. When modifications, repairs, or replacements are required after final inspection or testing, there shall be re-inspection and re-testing of any characteristics affected.

4. The Quality Control Manual shall provide instructions for handling, storage, preservation, packaging, and shipping to protect the quality of products and prevent damage, loss, deterioration, degradation, or substitution of products. It shall also require and monitor the use of procedures to prevent handling damage to articles. Products in storage shall be protected against deterioration and damage.

B. Quality Assurance

1. The BHS Contractor shall be responsible for all quality control of its Work, including work performed by any of its subcontractors. Include in its own direct subcontracts those provisions which are necessary to assure that the quality of subcontracted work will be as good as the requirements herein.

2. The City of El Paso or its representative shall have the right to audit and inspect the BHS Contractor's and its direct subcontractors' quality systems. Such audits may be conducted on a random or routine basis and may include an audit of the BHS Contractor's inspection and test records. The City of El Paso or its representative shall have the right to witness any tests or inspections and shall have access to all test data including test procedures, test specifications, and test results. The City of El Paso or its representative shall have the right to conduct independent tests or inspections at its own expense on any material or equipment to be used on the project. Should such the City of El Paso or its representative directed independent test result in failure, the BHS Contractor shall reimburse the City of El Paso's expense for the test. The objective of all audits, inspections, or tests conducted by the City of El Paso or its representative is to ensure that all performed work is accomplished in compliance with the Contract Documents.

3. The City of El Paso or its representative shall have the right to reject, and the BHS Contractor shall replace at the BHS Contractor's cost, any construction, production or installation, or portion thereof, which has not been accomplished or documented as accomplished in accordance with the accepted Quality Control Plan.

C. Quality Assurance Representative

1. Appoint a Quality Assurance Representative acceptable to the City of El Paso or its representative who shall be responsible for the overall quality assurance implementation and monitoring of the general requirements.

2. The quality assurance representative shall be available on-site during the construction period at all times and be qualified to advise the City of El Paso or its representative on the overall BHS scope of work (i.e., installation/removal procedures, provisioning, start-up and maintenance of the equipment).

D. Configuration Management Plan

1. Maintain strict configuration control of all aspects of the design, construction, fabrication and installation of the BHS Systems. Submit a Configuration Management Plan for the City of El Paso or its representative review and approval. Carry out all aspects of this Plan.

2. Establish a system, to identify, organize and track all documents developed as part of the BHS Contract Work

throughout the duration of the project. Serialize all correspondence and transmittals, and establish a logging system for incoming/outgoing correspondence showing action requirements and action taken. Drawings, specifications, subcontract documents, reports, estimates, studies, reviews, BHC and PLC system programming changes, and computer files, shall be tracked by a logging system.

3. Provide each existing BHC and PLC system that shall be modified under this project which does not have an existing configuration management software solution with a software solution that shall automatically audit/manage the configuration and change management of its respective operating software applications.

4. Tracking logs for correspondence and documents shall be provided when requested by the City of El Paso or its representative. Establish a single source for transmitting and receiving documents and correspondence. Material from the BHS Contractor's subcontractors shall be consolidated and submitted to the City of El Paso or its representative

5. Logs for correspondence and document control shall be provided to the City of El Paso or its representative on electronic media and in reproducible hard copy for use in the City of El Paso's document control system.

6. Once configuration for an element of the BHS System is established (for example, at Design Reviews or during acceptance testing), the configuration of all such elements shall not be changed without proper approval as provided for in the Configuration Management Plan. Once configuration changes are approved, formal Change Order Documentation shall be circulated in accordance with a distribution list (which shall include the City of El Paso or its representative) developed for that purpose.

7. Ensure that at Substantial Completion of the BHS Alterations/Additions (by phase or applicable testing period) the above referenced provided BHC and PLC system software solution to automatically manage configuration and change management for all operating software applications, is carried out and executed consistent with the following minimum functions:

    a. Monitor critical computer services

    b. Log system events across concurrent processes

    c. Audit and log changes made to the running processes

    d. Verify, backup and recovery programs and system files

    e. Secure access to editing and monitoring functions

    f. Provide file management for all system components

    g. Manage and secure product access

8. The audit function shall track every change made to the BHS system and its operating programs, including detecting who, where and when changes were made. The archive file management function shall manage all revisions carried out to the system, as files are modified, revisions shall also be stored and be accessible for future use.

E. Safety Program Manual

1. Prepare a site-specific safety program manual acceptable to the City of El Paso or its representative.

2. Designate a Safety Manager/Coordinator acceptable to the City of El Paso or its representative.

3. The Safety Program shall be implemented to identify and resolve hazards. The Safety Program shall emphasize the prevention of accidents by resolving hazards in a systematic manner. The Safety Program Plan, as described below, will identify the responsibilities of all parties for implementing the Safety Program.

4. The Safety Program shall demonstrate compliance with all applicable safety rules and regulations. The levels of compliance shall meet the OSHA Standards, ANSI Standards, NFPA Standards, NEC Standards, and trade association standards and recommendations as applicable.

5. The safety program manual shall contain as a minimum the following:

    a. Have as its objective to provide for the safety of the passengers, employees, general public and

equipment.

b. Encompass all elements within the provided BHS Systems.

c. Include all interfaces with Facilities provided by others and identify all hazards within the Facilities that may result from the unique characteristics of the BHS System.

d. Identify the safety roles and responsibilities of all the BHS Contractors' organizational elements and require accountability of each.

e. Contain a hazard resolution process that includes the procedures necessary to identify and resolve hazards.

f. Indicate safety inspection lists and methods that shall be utilized by all personnel employed on this project.

g. A plan for furnishing and enforcing the use of individual protective equipment including hard hats, rain gear, protective footwear, protective clothing and gloves, eye protection, ear protection, respirators, safety belts, safety harnesses, safety lifelines and lanyards, and high visibility reflective safety vests.

h. A plan for providing first aid facilities, supplies, and trained personnel.

i. A plan for employee safety training to include employee safety orientation during the first week of work, weekly work crew safety meetings, periodic safety meetings for supervisory personnel, and special training prior to working with especially hazardous materials or operations.

j. Emergency plans for items such as, but not limited to, fire emergencies, severe weather, earthquakes and other geologic hazards, or flooding emergencies, seriously injured personnel, traffic accidents along the project site, and injuries of members of the public.

k. Pre-construction planning relative to safety and control of hazards including special tools, equipment, facilities, and individual protective gear.

l. A plan for periodic safety inspections, investigations of all accidents and injuries and submission of timely reports.

m. Submission of injury/accident/incident data for statistical analysis.

F. Project Management Team

1. Submit to the City of El Paso or its representative for review and approval, the following listing of key personnel with resumes and qualifications that will be working on the project:

a. Senior Project Manager

b. On-Site Field Supervisor(s)

c. Professional Engineer(s)

d. Safety Manager

e. Configuration Control/Schedule Manager(s)

f. Quality Control/Assurance Manager(s)

g. Project Manager(s) - Electrical and Control Systems Engineering

h. Project Manager(s) - Mechanical Engineering

i. Project Manager(s) - Computer Systems Engineering

j. Instructors/training personnel (in addition, provide instructors professional qualifications)

2. Include on-site and off-site participating personnel and the percent of anticipated participation on this project. The City of El Paso or its representative reserves the right to approve or reject key personnel from the list.

3. The Project Manager and on-site Superintendent(s) shall not be changed without the City of El Paso's or its representative's written approval.

4. The BHS Contractor, individuals or entities constituting the BHS Contractor and the officers or directors of the BHS Contractor or entities or key members of the Project Management Team shall have records of past performance sufficient to assure the City of El Paso or its representative that they have the experience, competence and integrity to successfully complete a project of this magnitude.

G. Project Management Office

1. Within one week of the date of commencement initiate the Project Management Office, inform the City of El Paso or its representative of the details of the office, and authorize the Project Manager and on-site Field Superintendent to act as representatives

2. The Project Manager shall be given full authority to make decisions and enter into binding agreements with the City of El Paso for all aspects of the project.

3. Submit to the Construction/Program Manager, the City of El Paso or its representative a listing of all key project personnel with 24-hour contact details (cell phone number, office number and e-mail addresses).

4. Provide all office equipment (e.g. telephones, copiers, fax, computers, plotters, furniture) required to establish their on-site project management office.

H. Workmanship

1. Ensure that all equipment is manufactured and installed in accordance with the best commercial practices consistent with the intended design and usage and is acceptable to the City of El Paso or its representative.

2. Ensure that all materials and components are new and free from defects. Do not supply used equipment, whether refurbished or reconditioned, unless indicated in the specifications and drawings or without the express approval of the City of El Paso or its representative.

3. The City of El Paso or its representative shall reserve the right to inspect any conveyor component at the BHS Contractor's factory prior to shipment of said components. Coordinate with the City of El Paso or its representative, fabrication of any components that the City of El Paso or its representative requests to inspect such that said components are fully assembled and available for inspection by the City of El Paso or its representative at the previously arranged time of the factory visit.

I. Pre-Installation Meeting

1. Prior to the start of the installation; attend meetings on-site as required or requested by the City of El Paso or its representative. The City of El Paso or its representative will schedule the Pre-Installation meetings, for the purpose of coordinating the on-site installation with ongoing airport operations.

2. Provide at the initial pre-installation meeting to the City of El Paso or the Construction Manager the following:

   a. Safety Program Manual

   b. Drug Policy Manual

   c. Submittal Schedule

   d. Project Organization Chart to include all Sub Contractors

   e. Principle suppliers to include long lead items and planned procurement dates

   f. Insurance enrollment forms

   g. Quality Control Manual

   h. Configuration Management Plan

   i. Diversity Program

j. Updated Master Schedule

k. Plans for coordination and notification for utility work

l. Plans for coordination with the work of other contractors and procedures for sharing access to the work site.

m. Schedule of deliveries of major equipment

J. Pre-Demolition Meeting

1. Prior to the start of any demolition; attend meetings on-site as required or requested by the City of El Paso or its representative. The City of El Paso or its representative shall schedule the Pre-Demolition meetings for the purpose of coordinating the on-site removal of the BHS equipment with ongoing airport operations.

K. Work Activities Bulletin

1. Submit a detailed work plan for ISAT (both BHS Contractor and TSA conducted), individual subsystem testing, sortation testing, every planned cutover, demolition, and system outage. A BHS specific "Work Activities Bulletin" must be submitted to the City of El Paso or its representative for distribution to the impacted airlines, other impacted contractors (e.g. EDS manufacturer, ATR manufacturer, BDD manufacturer) and the City of El Paso a minimum of 7 days prior to the testing, demolition or cutover activity-taking place.

2. No work should be commenced unless the BHS Contractor has a signed "Work Activities Bulletin" in hand, and has distributed copies the User Airlines, the City of El Paso or its representative.

3. The "Work Activities Bulletin" shall contain the following as a minimum:

a. Contractor's internal deadlines for completion of pertinent facility interfaces by other disciplines (e.g. permanent system power, support structure, or other facility interface requirements).

b. Date and time planned activity to take place from start to finish

c. User Airlines that are impacted

d. Details of all conveyors to be removed with duration

e. Details of all conveyors to be installed with duration

f. Electrical installation duration

g. Contractors internal testing with duration

h. Ticket counter/make up device requirements for loading/unloading of test bags. Coordination with the City of El Paso or its representative and user airlines will/may be required

i. Generation of airline 10-digit bag tags/BSMs required for testing. Coordination with the City of El Paso or its representative and user airlines will/may be required

j. Witnessed system testing with duration

k. Full details of contingency plans

l. Details of person(s) (with qualifications) overseeing the activity

m. Details and number of personnel to be present who are qualified to troubleshoot all aspects of their respective equipment during the planned activity, for example:

1.) Mechanics

2.) Electricians

3.) Controls Engineers

4.) Computer programmers

n. Other affected equipment manufacturers (e.g. EDS manufacturer, ATR manufacturer). Confirmation that these manufacturers have been notified and will be in attendance if required.

4. Detailed description of activities required when completing overnight changeovers to ensure that disruption to baggage handling system is kept to a minimum. Include all preparatory work by other trades. Provide backup plan for recovery of operations if changeover work will not be completed in time.

5. Coordination and operational interface to ensure on-going airline and airport operation is not disrupted.

6. Submit as part of the submittal process a sample of their proposed "Work Activities Bulletin" format for review and approval by the City of El Paso or its representative.

L. Field Quality Control Services

1. Establish and maintain quality control for operations under this Section to ensure compliance with Contract Document requirements and maintain records of quality control for alteration and removal operations.

2. Submit quality control procedures for operations in conjunction with work under this Section for approval. Do not start work prior to receiving approval.

3. The procedures shall include a checklist of points to be observed.

4. The actual quality control observations and inspections shall be documented and a copy of the documentation maintained on file.

5. Any work found not to be in compliance with the Contract Documents, shall be promptly corrected in an approved manner, at no additional cost to the City of El Paso.

6. If the facility is under construction or modification, cooperate with other contractors who may be working in the immediate area for coordination of right-of-way clearances and verify as-built conditions.

7. Where walls immediately adjacent to conveyor equipment affect maintenance access, advise the City of El Paso or its representative of the location and size of the wall opening that needs to be developed to permit access to drive components, bearings, and other equipment that would normally be inaccessible because of the wall.

8. Ensure that the design and installation of all conveyor equipment provides maximum access for operational and maintenance personnel.

M. Approval to Proceed

1. Before starting any work affecting existing baggage handling equipment that shall temporarily discontinue or disrupt service to the existing system/operations, notify the City of El Paso or its representative 72 hours in advance and obtain the City of El Paso or its representative approval in writing before proceeding with this phase of the work.

N. Preparatory Inspection

1. To be conducted prior to commencing work:

a. Check schedules, project conditions, protection, traffic arrangements, utilities services maintenance, and related preparatory work for conformance to submittals.

b. Check to assure adequate protection against damage.

c. Ensure that all workers are qualified.

d. Review installation; demolition, removal and disposal procedures to assure coordination of Contract Documents requirements with each person involved in performing the work.

e. Verify as-built conditions and notify the City of El Paso or its representative of conflicts.

O. Initial Inspection

1. To be conducted after a representative sample of the work is complete:

a. Review the representative sample of the work against the specification and code requirements previously discussed at preparatory inspection.

b. Check for workmanship.

c. Check installation, removal and disposal of each item for conformance.

d. Check for damage and ensure that damaged work is corrected, at no additional cost to the City of El Paso.

e. Submit documentation for review to the City of El Paso or its representative detailing compliance of the above.

P. Follow-Up Inspection

1. Check completed work against results of initial inspection of representative sample of work against items mentioned in the preparatory inspection.

2. Verify that damaged work is corrected properly and approved by the City of El Paso or its representative, at no additional cost to the City of El Paso.

3. Submit documentation for review to the City of El Paso or its representative detailing compliance of the above.

Q. Inspection Results

1. Certify inspection results: This certification shall state that the observations were performed by or under the direct supervision of the BHS Contractor's Quality Assurance Representative and that the results are representative of the conditions being certified.

2. Work accomplished shall be considered satisfactory only when the records and inspections show that all variances have been corrected and that the work is in conformance with the Contract Documents.

3. Submit documentation for review to the City of El Paso or its representative detailing compliance of the above.

4.02 TESTING AND ACCEPTANCE

A. Inspection and Testing Procedures

1. General

a. After installation of the BHS, demonstrate its operating capability. Accomplish prior to the start of the Systems Acceptance Testing all "debugging" and internal testing. In addition, carry out a "dry test run" of Acceptance Tests prior to conducting such tests with the City of El Paso or its representative to ensure that tests conducted with the City of El Paso or its representative are successful. Make available to the City of El Paso on a daily basis any and all records of internal testing and debugging (with corrective action carried out) performed prior to Acceptance Testing.

b. The System shall be capable of handling the maximum and minimum specified sizes and weights without jamming, damage or toppling of the baggage.

c. Provide all actual baggage and simulated weighted baggage required for testing. Actual baggage provided shall be representative of the many different types of baggage pieces encountered during live operations, including the maximum sizes and weights as defined in this specification. Simulated weighted baggage used shall be either weighted tubs or boxes. All baggage used for testing purposes shall be approved by the City of El Paso or its representative prior to testing. The ratio of actual to simulated test baggage for this project shall be 50% of each. If necessary during the testing period, replace any simulated or actual test baggage that becomes damaged to the extent that it is no longer useable in order to maintain a minimum of test pieces at all times.

d. Provide an ISAT test bag kit consisting of a minimum 50 bags per EDS machine of types/sizes listed below with baggage weights which range between 5 pounds and 50 pounds to cover the wide variety of

BHS and EDS processing specifications:

Bag Type	Length (in)	Width (in)	Height (in)
Upright	27	19	10
Carry-on Upright	24	15	9
Rectangular Duffle	22	12	12
Expandable Upright	22	17	10
Expandable Upright	22	17	9
Expandable Upright	22	14	9
Upright	27	19	10
Rectangular Duffle	22	12	12
Semi-hard shell	28	23	9
Semi-hard shell	27	21	9
Garment bag (folded dimension)	22	21	7
Large Duffle	35	16	15
Duffle	30	15	10
Small Duffle	17	9	7
Cooler	30	18	18
Long Case (Gun Case)	43	16	6
Long Case (Gun Case)	52	16	6

e. All tests shall be conducted with the above ratio of actual and simulated baggage except for load tests, which shall be acceptable to be performed with simulated baggage only. No sand, dirt, or other abrasive material shall be used for weight while performing load tests.

f. Provide appropriate service personnel "on-site" during the testing period to service or adjust, as required, the System equipment as well as to open all control boxes, control station covers, drive assembly chain/V-belt guards, and covers for the City of El Paso inspection of the system equipment.

g. Provide all necessary test, measuring, and recording devices required to demonstrate the operational characteristics and performance of the equipment to the satisfaction of the City of El Paso (clamp-on type ammeter, direct read FPM digital readout tachometer, and all other required devices).

h. Provide written notice (minimum 14 days) to the City of El Paso prior to acceptance testing that they have completed all “dry test runs” of the acceptance tests and are ready for the witnessed testing. Ensure that the City of El Paso or its representative witness all Acceptance Tests and shall indicate Acceptance by signing and dating the test data sheet. The City of El Paso reserves the rights to back charge the BHS Contractor for the time and expenses of all who attended the Acceptance Testing on the City of El Paso’s behalf should the requested acceptance test(s) be unsuccessful and require re-testing at a later date.

2. System Inspection and Test Plan Submittal

a. Submit an Inspection and Test Plan for this Project based on the information provided below and submitted per the submittal schedule detailed Part 1 of this specification for review and approval by the

City of El Paso or its representative.

b. As various subsystems may require testing independent of one another, a number of tests will have to be conducted at the various stages of installation.

c. The test plan shall be submitted in both hard copies for field use during the testing process and a completed (based upon acceptance testing) electronic format agreed upon by the City of El Paso or its representative.

d. The test plan shall include as a minimum the following:

1.) Description of each Test

2.) Pass/Fail Criteria

3.) Expected duration of the test

4.) Number of test bags required and where they are to be positioned for the start of the test

5.) If required, confirm all bag statistics on the MIS reports have been reset

6.) Number of airline 10-digit bag tags/BSMs required for testing. Coordination with the user airlines will/may be required

7.) List all test equipment required

8.) Number of personnel required for the test to include:

a.) Test Supervisor

b.) Mechanical

c.) Electrical

d.) Controls/computer engineer(s)

e.) Personnel required to load and remove bags

f.) BCR operator

9.) List other affected equipment manufacturers (e.g. EDS manufacturer, ATR vendor) that may be required for the test. Confirmation that these manufacturers have been notified and will be in attendance.

10.) Details of all reports to be printed after the test

11.) Pass/Fail and Notes/Comments sections.

12.) Section for witnessed sign off, to include as a minimum BHS Contractor, the City of El Paso or its representative

e. The following is intended to be a guideline, and is not to be construed as all-inclusive:

1.) Mechanical Static Inspection: Submit a comprehensive, easy to read mechanical equipment inspection plan for every piece of mechanical equipment installed as part of the BHS. This inspection plan shall verify adherence to the Specification for the following items:

a.) Belt Conveyors: Gaps between adjacent head and tail pulleys, - Vertical clearance, - Angle of incline/decline, 4" conveyor I.D. - Gaps between adjacent bed sections, - Gaps between adjacent side guard sections, - Baggage snag points, - Sharp edges or shear burrs, - Condition of painted surfaces, - Tightness of all hardware, - Alignment of stainless steel trim and bed section filler plate, - Spacing of vertical braces for side guards/back guards, - Spacing of conveyor supports, - Sway bracing, - Trim securement screw type and countersinking, - Safety guarding/belly pans, - Anchoring/mounting of access ladders, - Installation of right angle transfer transition plate, - Belting material and splicing, - Belt lacing size and cable, - 1"

V-notch in belting splice, - Belt path routing, - Belt wrap, - Belt tension, - Pulley diameter, - Pulley shaft diameter, - Vertical alignment of head and tail pulleys, - Lateral position of pulleys, - Return roller diameter, - Return roller spacing, - Bearing mounting lock washers, - Bearing jacking bolts, - Bearing grease zerk removal, - Bearing caps, - Motor and speed reducer mounting lock washers, - Speed reducer drip pan, - Motor/speed reducer related sprocket/sheave and shaft alignment, - Motor/speed reducer related sprocket or sheave key tightness, - Motor/speed reducer related chain/V-belt tension, - Chain/V-belt safety guard, - Speed reducer leakage, - Speed reducer lubrication level, - Mounting of speed reducer torque arm, - Safety finger guards on end pulleys at staffed conveyors (ticket counter conveyors, sort piers, manual encoding) -- 25% take-up pulley position, - Installation of strip door type draft curtain, - Installation of fire/security doors, - Removal of construction related debris, - Maintenance access, - Protective guard railing installation, - Vertical clearance for traffic aisles.

b.) ATR Scanner Arrays: Array I.D, - Vertical and lateral clearances, - Baggage snag points, - Sharp edges or shear burrs, - Condition of painted surfaces, - Proper anchoring of scanner array framework, - Scanner support/mounting hardware tightness and lock washers, - Maintenance access – Bottom heads blower motors support/mounting hardware tightness.

c.) Flat Plate Devices: Tray vertical clearance -- gaps between adjacent back guard sections -- gap between perimeter finger guard and top of pallet not in excess of 1/8" -- skirting above and below conveying surface -- sharp edges or shear burrs -- condition of painted surfaces -- tightness of all hardware trim -- securement screw type and countersinking -- baggage snag points -- drive assembly safety guarding -- speed reducer drip pan -- motor/speed reducer type and alignment -- motor-driven sprockets/sheaves alignment -- motor-driven chain/V-belt tension -- speed reducer leakage -- removal of construction debris -- maintenance access -- protective guard railing gap between adjacent plates not in excess of 1/16" -- plate-driving sprocket alignment -- plate-driving chain tightness

2.) Electrical Static Inspection: Submit a comprehensive, easy to read electrical equipment inspection plan. For the determination of terminal tightness, all terminals in motor control panels or field mounted devices shall be tightened to the manufacturer's recommended torque specifications utilizing a certified calibrated torque wrench or appropriate tool. Demonstrate to the City of El Paso or its representative that the screws are set at the proper torque value and include this information in the below referenced electrical static inspection reports. This inspection plan shall verify adherence to the Specification for the following items:

a.) Belt Conveyors: Control station I.D./function tags -- control station and disconnect switch accessibility/location -- illuminated pushbutton switch protective guard ring -- tightness of all hardware -- photocell mounting -- tach mounting and coupling -- control circuit wiring size, type, color, and number tag -- power circuit wiring size, type, color, and number tag -- wire "whiskers" at terminal points -- wiring terminal point screw tightness -- splice point wire nuts within junction boxes -- conduit routing and mounting -- tightness of conduit/Sealtite fittings -- junction box covers -- unused openings in junction boxes or control device boxes -- safety disconnect switch lockout capability -- lanyard cable supports and limit switch -- maintenance access -- record motor name plate data, size of motor overload heaters, and size of all fuses.

b.) Flat Plate Devices: Control station I.D./function tags -- control station and disconnect switch accessibility/location -- illuminated pushbutton switch protective guard ring -- tightness of all hardware -- photocell mounting -- control circuit wiring size, type, color, and number tag -- power circuit wiring size, type, color, and number tag -- wire "whiskers" at terminal points -- wiring terminal point screw tightness -- splice point wire nuts within junction boxes -- conduit routing and mounting -- tightness of conduit/Sealtite fittings -- junction box covers -- unused openings in junction boxes or control device boxes -- safety disconnect switch lockout capability -- maintenance access -- record motor name plate data, size of motor overload heaters, and size of all fuses.

c.) High Speed Paddle Diverters: Control station I.D./function tags -- control station and

disconnect switch accessibility/location -- illuminated pushbutton switch protective guard ring -- tightness of all hardware -- photocell mounting -- tach mounting and coupling -- control circuit wiring size, type, color, and number tag -- power circuit wiring size, type, color, and number tag -- wire "whiskers" at terminal points -- wiring terminal point screw tightness -- splice point wire nuts within junction boxes -- conduit routing and mounting -- tightness of conduit/Sealtite fittings -- junction box covers -- unused openings in junction boxes or control device boxes -- safety disconnect switch lockout capability -- lanyard cable supports and limit switch -- maintenance access -- record motor name plate data, size of motor overload heaters, and size of all fuses.

d.) Vertical Sort: Control station I.D./function tags -- control station and disconnect switch accessibility/location -- illuminated pushbutton switch protective guard ring -- tightness of all hardware -- photocell mounting -- tach mounting and coupling -- control circuit wiring size, type, color, and number tag -- power circuit wiring size, type, color, and number tag -- wire "whiskers" at terminal points -- wiring terminal point screw tightness -- splice point wire nuts within junction boxes -- conduit routing and mounting -- tightness of conduit/Sealtite fittings -- junction box covers -- unused openings in junction boxes or control device boxes -- safety disconnect switch lockout capability -- lanyard cable supports and limit switch -- maintenance access -- record motor name plate data, size of motor overload heaters, and size of all fuses.

e.) ATR Scanner Arrays: Scanner I.D. tags -- tightness of all hardware -- control circuit wiring size, type, color, and number tag -- tightness of scanner cable connections -- power circuit wiring size, type, color, and number tag -- wire "whiskers" at terminal points -- wiring terminal point screw tightness -- splice point wire nuts within junction boxes -- conduit routing and mounting -- tightness of conduit/Sealtite fittings -- junction box covers --unused openings in junction boxes or control device boxes – bottom heads blower motors conduit routing and mounting -- maintenance access.

f.) Motor Control Panels: I.D. information for MCP and all devices contained within -- control station I.D./function tags -- illuminated pushbutton switch protective guard ring -- location of control devices -- tightness of all hardware -- control circuit wiring size, type, color, and number tag -- power circuit wiring size, type, color, and number tag -- wire "whiskers" at terminal points -- wiring terminal point screw tightness -- Panduit wire raceway -- splices in Panduit wire raceway -- Panduit wire raceway covers -- conduit routing and mounting -- tightness of conduit fittings -- conduit bushings and chase nipples -- "air-space" around programmable logic controllers -- MCP door(s) mechanical safety interlock -- safety shield over line and load terminals of MCP main breaker -- orientation of status panel -- restraint clips for plug-in type power supply --installation of hour meter -- hour meter I.D. tag.

3.) Dynamic Mechanical Testing: Submit a comprehensive, easy to read mechanical test plan. This test plan, at a minimum, shall verify the specified functionality of the following:

a.) Belt Conveyors: Conveyor speed -- belt tracking -- shaft run-out on pulleys -- excessive vibration -- operation of clutch/brake units -- lateral movement of speed reducer on shaft during start/stops -- abnormal noises -- torsion flexing of drive assembly during start/stop operation -- operation of controls

b.) Flat Plate Devices: Operation of "soft-start" device -- engagement of plate cam followers with drive assembly -- vertical or horizontal displacement of plates through drive assembly section -- excessive vibration -- abnormal noises -- binding of perimeter finger guards with top surfaces of plates -- operation of controls.

c.) High Speed Paddle Diverters: Operation of clutch units -- abnormal noises -- cycling speed -- paddle height above belt during cycle -- paddle extension across full width of conveyor belt -- operation of controls--capability of processing all types of baggage, including but not limited to, golf bags.

d.) Vertical Sorter: Operation of clutch units - abnormal noises - -cycling speed - - operation of controls.

4.) E-Stop Hardwire Test–Controls engineer shall force on all motor outputs per the MCP. Each E-Stop will then be tested to ensure that the correct associated conveyors stop per drawing requirements. This test will be validated both in the field, at the MCP and in the control room.

5.) Dynamic Electrical Testing: Submit a comprehensive, easy to read electrical test plan that clearly identifies all installed control devices, the control device locations in the BHS, the function of the control device, all conveyors affected by the control device, and the expected field result with applicable system monitor message/display. The test plan shall be submitted in both hard copy for field use during the testing process and a completed (based upon acceptance testing) electronic format agreed upon by the City of El Paso or its representative.

a.) All Control Devices: Photocells -- limit switches -- status lights -- hour meter -- start-up alarms -- fault warning alarms -- fault warning alarms with multiple faults -- fault warning alarm silence buttons -- timer settings -- auto shut-down -- motor overloads -- motor disconnects – auto start – cascade operation – inch and feed operation – e stop function – run lanyard – overheight/over length function – jam function.

b.) Workstations: Graphical system status display – graphic fault warning and associated text display -- report generation (daily, weekly, monthly, annual and on demand) – accuracy of all reports -- redundancy operation between primary and back up workstations -- problem resolution text – modification to flight and tag tables – change sort pier assignments – system re-route/re-configuration – monitor redundancy functions – communication/interfaces with FIDS – access to all security levels – BSM retention control – ability to render individual equipment unavailable/available – statistics and counter reset capability –demonstrate statistical data backup functionality

c.) ATR Scanner Arrays: Read capability of scanner array with all tag orientations -- generation of "no-read" error information -- generation of performance statistical information -- generation of fault warning alarm(s) and appropriate indications for multiplexing device failure -- generation of fault warning alarm(s) and appropriate indications for individual scanner output failure – verification of redundancy.

d.) Cable Testing: Test all cables, including all fiber optic, Cat-5e and Cat-6 telecommunication cables, and all cables to be connected as part of an interface to another system (e.g. fire system, host computers, ACAMS, L3 6700 devices, PanelView Terminals).

e.) Interface Testing: Test all interfaces with other systems (e.g. fire system, SITA, ACAMS, FIDS, L3 3DX 6700 devices). Coordinate with other trades in support of this testing.

6.) Empirical Readings

a.) The Empirical Readings which are to be taken at the time of Conditional Acceptance Testing are to include the following:

(1.) Main Feeds: Fuse size per phase, actual amperage per phase.

(2.) Transformers: Fuse size per phase, actual amperage per phase.

(3.) Conveyor/Device Speeds: Actual “center-line” speed of conveyor/device.

(4.) Motors: Nameplate data, horsepower, listed motor current; fuse size per phase, actual amperage per phase, overload heater size or designation.

(5.) VFDs: record all VFD settings

7.) Load Testing: Submit a comprehensive, easy to read test plan listing the expected load rating for each device, at a minimum, provide the following:

a.) Individual device identifications with the expected load rating for each device.

b.) Amperage readings per phase under No Load conditions.

c.) Fuse Sizes (if applicable) and motor heater settings.

d.) Motor nameplate FLA for each device drive and HP.

e.) Amperage readings per phase under Full Load conditions.

f.) Pass/Fail and Notes/Comments sections.

All FLA readings taken during load testing shall be recorded and included in the Final O&M Manual for record. Motor FLA shall be measured with full load during load tests and any motor that draws more than the name plate FLA (after start up in rush current has flattened) shall be replaced with a motor of appropriate size that shall result in no more than the max name plate FLA during load test.

8.) Rate Testing: Submit a comprehensive, easy to read test plan detailing the loads, system loading points, manpower required throughout the BHS for loading and re-circulating testing materials (if applicable), observational manpower required to monitor the system performance during the test, and clearly identify the system reports (by name) that will be used to demonstrate the system has achieved the specified processing rates.

a.) The Rate Test shall require the demonstration of the ability to accurately process the specified items per minute for 30 consecutive minutes.

b.) It is the intent of the Specifications that the maximum processing rate is for average length bags of 33-inch length.

9.) Sortation Testing: Submit a comprehensive, easy to read test plan, which will demonstrate the sortation capability of the system. It must clearly identify all the testing requirements and performance criteria.

a.) At a minimum, the test shall verify the ability of the System to perform the following:

(1.) Communications between the sort computer and the ATR scanner array

(2.) Sortation through the ATR scanner array using valid 10 digit BSM tags

(3.) Sortation through the ATR scanner array using invalid 10 digit BSM tags

(4.) Sortation through the ATR scanner array using conflicting 10 digit BSM tags

(5.) Sortation through the ATR scanner array using fallback procedures

(6.) PLC scan time verification test

(7.) All Operational and Maintenance Computer generated reports for accuracy and content

10.) Redundancy Testing: Submit a comprehensive, easy to read test plan, which will demonstrate the redundancy capability of the system:

a.) At a minimum, the test(s) shall verify the ability of the System to perform the following:

(1.) Redundancy Operation of the high level network

(2.) Redundancy Operation of the low level network

(3.) Redundancy Operation between primary and back up PLCs

(4.) Redundancy Operation between primary and back up sort computers

(5.) Redundancy Operation between primary and backup server computers

(6.) Redundancy Operation if main power feed A is lost

(7.) Redundancy Operation if main power feed B is lost

(8.) Redundancy Operation if an MDS monitor fails

(9.) Redundancy Operation of the ATR Scanner Array

(10.) UPS(s) Operation and redundancy

11.) EDS Matrix Testing: Submit a comprehensive, easy to read test plan, which will demonstrate the EDS Matrix system.

a.) Submit a comprehensive, easy to read test plan, which will demonstrate the EDS subsystem

b.) At a minimum, the test shall verify the ability of the EDS Matrix System to perform the following:

(1.) Transfer of bag ID information and screening status between the BHS and EDS device

(2.) Sortation through security screening Level 1 EDS matrix(s)

(3.) Sortation through security screening Level 2

(4.) Sortation through security screening Level 3 ETD matrix(s)

(5.) Bag Flow/Sortation through screening level 1 as individual EDS devices are made inoperable/operable

(6.) Test integration for sortation system for Cleared (level 1) and CBRA for Alarmed Secure Flight Selectee level 1 bag. Ensure a Clear message assigned by level 2 (OSR) does not change assigned Alarmed level 1 status and bag is diverted to the CBRA.

(7.) Redundancy Operation through all levels of EDS security screening system.

(8.) Level 2 decision timeout verification test

(9.) Tracking accuracy as specified within this specification

(10.) Routing of lost tracking/missing bags (either to ETD or returned to a level 1 device as per the TSA protocol)

(11.) Functionality of the EDS Test and Insert modes

(12.) Operation of the decision point failsafe system. Correct functionality of control station (cleared, alarmed and EDS unknown bag status indicator lights and audible alarms) located at the decision point.

(13.) Accuracy of EDS reports

(14.) EDS device Hold and Auto Modes of Operation with respect to the BHS system

(15.) Test bag insert after an EDS functionality (i.e. the unknown bag should be routed back into the level 1 device)

(16.) Test E-stop state between the EDS and BHS (all conveyor belts are stopped, no signal is sent to the EDS device gantry)

(17.) Test for a sustained maximum throughput rate for the complete EDS matrix

c.) Assist the TSA in performing the mandated Site Acceptance Testing (SAT) and Integrated System Acceptance Test (ISAT). Obtain the latest copy of the TSA's PGDS and ISAT test procedure to ensure their completed EDS system meets all the protocols and requirements contained within, prior to the TSA ISAT. Carry out a "dry test run" of the ISAT prior to the TSA testing.

d.) The Commissioning and Evaluation Requirements will include a series of tests determined by the most current release of the TSA PGDS to evaluate the checked baggage inspection system (CBIS) for adherence to the Design Performance Standards (DPS) established in Chapter 7 of the PGDS. The CBIS shall be commissioned or evaluated by or on behalf of the Transportation Security Administration (TSA) and will be tested in accordance with a Site

Specific Test Plan (SSTP) developed for this series of tests. The entire CBIS (Physical, Programming, Networking and Reports) as well as all Legacy BHS components delivering bags to the CBIS and taking bags away from the CBIS shall be in complete and final configuration for all tests. Any components not in final configuration or any situation requiring Phased Commissioning shall be submitted by the BHS Contractor to TSA for approval via the "Request for PGDS Variance Template" contained in Appendix A of the PGDS. The BHSC shall submit to TSA or their designee the PLC Code for all PLCs controlling CBIS components in the Security Tracking Zones both at the initial start of ISAT and at the conclusion. TSA and/or TSA's independent test and evaluation contractor will verify that the tests contained in the SSTP have been performed either by witnessing the testing performed by the entity responsible for system construction or by performing an independent test of the system.

12.) System Endurance and Stability Test

a.) In order to demonstrate that the system is stable and ready for operational use, a 40-hour test must be conducted in which the BHS Contractor simulates, as close as possible, actual operational conditions. This test shall be conducted after successful completion of all other inspections and acceptance tests.

b.) Submit a detailed 40 hour test script to be reviewed by the City of El Paso or its representative at least 60 days prior to the intended date of testing

c.) The system shall be tested for a minimum of 40 hours under simulated design year operating conditions using test baggage and approved simulated baggage items. Simulated operating conditions shall include a minimum of 2 peaks during the day of 30 minutes each at a minimum of 80% of design throughput. During non-peak periods, a minimum of 10% of the design throughput shall be processed continuously through the system while in the testing period

d.) Supply all labor, materials, test baggage, baggage tags, pseudo BSMs (as required), and anything else necessary for successfully completing the 40 hr test.

e.) The 40 hours of testing shall be conducted within a maximum elapsed time of three (3) calendar days (e.g. two 16-hour days and one 8-hour day).

f.) There shall be no tuning; modifications or other work on the software of the system during any part of the 40-hour test as it is intended to mimic actual operation. Only standard automated control system clean up routines that are part of the normal operating routines shall be allowed to take place during the 40-hour test.

g.) Collect detailed statistics at the end of each test day during the 40-hour test and shall also summarize these statistics for the entire test period. Both the daily and summary statistics shall be submitted to the City of El Paso or its representative for review and approval prior to acceptance of the test.

h.) During the System Endurance and Stability Test the system shall meet a minimum of 99.5% tracking accuracy, a minimum of 99.9% sortation accuracy, and a minimum ATR read rate of 95% for originating bags as required in Section 1.08 - System Design and Performance Requirements of Part 1 of this specification.

i.) A detailed list of observed programming/system deficiencies shall be generated and submitted with the test data. These deficiencies shall be corrected following the conclusion of the 40-hour system endurance and stability test.

j.) The System Endurance and Stability Test shall be followed by a complete system inspection for necessary corrections and adjustments. Such adjustments may include the requirement for retraining of the belts, re-tensioning of the belts and any shortening of belting material required to meet the maximum take-up pulley adjustment as defined in Part II of this Specification.

k.) The subsystems, computer systems and the system in its entirety shall meet the availability requirements specified within these contract documents during the testing periods.

l.) Any component not operating within 5% of design speed shall be reworked to perform at the proper speed.

13.) Test Failure

a.) A failure during any test period shall be defined as any design characteristic or malfunction of the furnished equipment or materials that damages product or reduces any operating rate below those "specified".

b.) Conditions resulting from improper loading of product or loading product of sizes not included in specification requirements will not be considered as failures.

B. Conditional Acceptance

1. Conditional Acceptance for each phase will only be considered after the following are completed:

a. The Conditional Acceptance Inspection and Testing procedures presented below are successfully completed as specified.

b. Final Operation and maintenance manuals have been delivered.

c. Operation and maintenance training has been completed.

d. Spare parts as purchased by the City of El Paso for that phase have been delivered.

e. All special tools and equipment required for maintenance purchased by the City of El Paso have been delivered.

f. The name, address and a 24-hour phone number of a representative who has the authority and experience to make immediate replacements and repairs for the full life of all warranties has been provided.

2. Conditional Acceptance Inspection and Testing

a. The System, including all upper and lower level controls, shall demonstrate compliance with the approved Test Plan. The individual inspections and tests shall be performed in the order presented above. System deficiencies (punch list items) shall be corrected before performing the subsequent inspections or tests. The City of El Paso at his discretion may request for reimbursement of costs from the BHS Contractor for multiple re-inspections of system deficiencies/punch list items.

1.) Mechanical Static Inspection

2.) Electrical Static Inspection

3.) Electrical Testing

4.) Mechanical Testing

5.) Empirical Readings

6.) Load Testing

7.) Rate Testing

8.) Sortation Testing

9.) Redundancy Testing

10.) EDS Matrix Testing

11.) System Endurance and Stability Test

3. Upon successful completion of the specified Inspections and Testing, the City of El Paso will issue a written

notice of Conditional Acceptance.

4. A Conditional Acceptance status will indicate that the City of El Paso or its representative have approved the equipment as worthy for operational use.

5. The Conditional Acceptance shall not relieve the responsibility for maintenance, security and insurance on the system.

6. In no case will Conditional Acceptance relieve the responsibility for performing all the work set forth in the Contract Documents.

7. At the time of Conditional Acceptance, the amount of retention held until issuance of a Certificate of Final Acceptance shall be a summation of 10% of the total value of the project and the assessed value of open punch list items (to be determined by the City of El Paso).

8. Conditional Acceptance is applicable to each construction phase and must be issued in writing, by the City of El Paso, prior to commencement of subsequent construction phases. Final Acceptance of individual construction phases or subsystems shall not apply.

9. Conditional Acceptance Operational Period

   a. Upon issue of a Certificate of Conditional Acceptance, a thirty (30) day Operational Period to coincided with the TSA thirty (30) day run-in period, will commence in which the City of El Paso will put all systems into on-line operations processing the daily flow of baggage.

   b. During this thirty (30) day Operational Period, provide full-time technical site representation during the actual hours of operation with a minimum of 16 hours per day, 7 days per week. Ensure that the representatives shall be capable and duly qualified to provide service for any problems, which occur during this period. At a minimum, have two qualified personnel per shift to trouble shoot and immediately resolve any problems which may arise. The onsite personnel shall be capable of trouble shooting and resolving all electrical and controls related issues.

   c. During the thirty (30) day Operational Period, the BHS Contractor shall be responsible for all maintenance required on the BHS. During this time period the BHS Contractor will be responsible for ensuring that the BHS is fully operational during Airport Operational hours.

      Should any downtime occur during these hours due to major faults in the BHS (i.e., PLC fault, motor overloads, motor faults, Sort Controller Fault or any other faults deemed major by the City of El Paso) the BHS Contractor will be responsible for immediate rectification and assisting the City of El Paso in any way so that Operations is not impacted in any way.

   d. During the thirty (30) day Operational Period, keep a detailed computer log, as detailed in the Submittal Requirements of this specification.

   e. If, at the City of El Paso's discretion, site representation is deemed unnecessary, it shall be discontinued and the City of El Paso shall receive a prorated credit.

   f. If a problem occurs within the BHS system, and the City of El Paso has elected to not require full-time technical site representation during the thirty (30) day Operational Period, supply the name(s), address(s) and a 24-hour phone number of representative(s) that can be contacted who have the authority and experience to make immediate recommendations and assist the City of El Paso or the City of El Paso's Maintenance Contractor to return the system to a fully on-line state in the shortest possible time frame.

C. Conditional Acceptance With Defects

1. If the System is found to be unacceptable at the time of Conditional Acceptance Inspection and Testing, the City of El Paso will issue a written "Defects List" report containing information about the particular defects that must be remedied before Final Acceptance will be granted. At this time, if the defects do not affect the functionality of the System, the City of El Paso may elect to advise in writing that "Conditional Acceptance with Defects" has been granted. All terms presented in the "Conditional Acceptance" portion of this

Specification shall apply.

2. A "Conditional Acceptance with Defects" status, if issued, will indicate that the City of El Paso has approved the equipment as worthy for operational use. Subsequent to "Conditional Acceptance with Defects" issuance, the thirty (30) day Operational Period will commence in which the City of El Paso will put the System into on-line operations processing the daily flow of baggage. The City of El Paso will maintain the right to judge whether any hazard may exist to personnel or equipment due to unacceptable inspection results and revoke this approval. In the event the approval is revoked, the thirty (30) day Operational Period will be suspended until the hazard is remedied.

3. The City of El Paso will be entitled to retain from the project payments an amount commensurate with the value of work remaining to be accomplished. Further, all outstanding work must be performed at times during periods convenient to the City of El Paso and to the requirements of a fully operating system.

4. The Contractor must notify the City of El Paso within the thirty - (30) day Operational Period that all outstanding items on the "Defects List" have been corrected and that Inspection and Testing may continue. When all items have been approved in accordance with the Specifications, this shall conclude Inspection and Testing of the BHS. Only the remaining time of the thirty - (30) day Operational Period will be required prior to application of the Final Acceptance conditions.

D. Delayed Conditional Acceptance With Defects List

1. If the System is found to be functionally unacceptable at the time of Conditional Acceptance Inspection and Testing, the City of El Paso will issue a written "Defects List" report containing information about the particular defects that must be remedied before the thirty (30) day Operational Period will begin.

2. Items appearing on the "Defects List" will be considered incomplete, defective or not in conformance with the Specifications. The failure to include certain items does not alter the responsibility to complete the System in accordance with the Contract Documents.

3. A maximum period of 15 days will be allowed to correct the outstanding items on the "Defects List".

4. After all the items on the "Defects List" have been corrected, notify the City of El Paso or its representative that the System is ready for continuing Conditional Acceptance Inspection and Testing.

5. Upon completion of "Conditional Acceptance Inspection and Testing", the terms presented in the "Conditional Acceptance" or "Conditional Acceptance With Defects List" portions of this Specification will apply, as appropriate.

E. Final Acceptance

1. Final Acceptance will only be considered after all phases have conformed to the Conditional Acceptance terms, all phases have successfully completed the thirty (30) day Operational Period, and the following criteria is met:

   a. The System has not experienced repeated repairs and adjustments and is achieving the specified rate, accuracy and availability standards as required by this Specification.

   b. The System has successfully completed the specified Inspections and Testing, with no outstanding punch list items.

   c. The System is in full compliance with the Contract Documents.

   d. The City of El Paso and all other governing agencies have made their inspections and given their approvals.

   e. Certificates of Installation Compliance have been issued to the City of El Paso (e.g. weigh scale certifications)

   f. Warranties for all materials and equipment received from Subcontractors and Suppliers have been assigned to the City of El Paso.

   g. A spare parts and tools audit has been conducted and all tools have been turned over to the City of El

Paso. All spare parts purchased by the City of El Paso have been delivered.

h. The PLC and source codes for all programs in the BHS Computer System have been provided to the City of El Paso

i. Accurate "As-built" drawings and all manuals as specified in this Specification have been delivered.

j. Operation and maintenance training have been completed.

- END OF PART IV -

ARCHITECT:
MIJARES-MORA ARCHITECTS, INC.
111 N. FESTIVAL
EL PASO, TEXAS 79912
TEL: 915.542.1591
FAX: 915.542.1594

CIVIL ENGINEER:
QUANTUM ENGINEERING CONSULTANTS
414 EXECUTIVE CENTER BOULEVARD
EL PASO, TEXAS 79902
TEL: 915.532.7272
FAX: 915.532.7373

STRUCTURAL ENGINEER:
ZAMORA ENGINEERING
7170 WESTWIND DRIVE SUITE 301
EL PASO, TEXAS 79912
TEL: 915.587.9775
FAX: 915.587.9785

MECHANICAL ENGINEER:
ALEGRO ENGINEERING, L.P.
5822 CROMO DRIVE STE. 105
EL PASO, TEXAS 79912
TEL: 915.533.0700

ELECTRICAL ENGINEER:
ALPHA ENGINEERING
1818 E. RIO GRANDE
EL PASO, TEXAS 79902
TEL: 915.838.9900
FAX: 915.838.9909

BAGGAGE HANDLING SYSTEM:
BNP AND ASSOCIATES
1999 BROADWAY SUITE 3390
DENVER, CO. 80202
TEL: 720.374.4930

THE CITY OF EL PASO TEXAS

APPROVED AS FINAL

MONICA LOMBRANA, A.A.E. — Date
Interim City Engineer

SAM RODRIGUEZ, P.E. — Date
Assistant Director Aviation Development

MONICA LOMBRANA, A.A.E. — Date
Director of Aviation

EL PASO INTERNATIONAL AIRPORT

CHECKED BAGGAGE INSPECTION SYSTEM PROJECT

FUNDED BY: SOURCE

REGISTERED ARCHITECT JORGE L. MORA 12526 STATE OF TEXAS
DATE 5-31-16

CAPITAL IMPROVEMENT
CITY OF EL PASO

218 N. Campbell Street, El Paso, TX. 79901
Telephone : (915) 212-0065

MIJARES-MORA ARCHITECTS, INC. — MAY 2016
ARCHITECT — Date

238512
FILE NO.

EPIA CHECKED BAGGAE INSPECTION SYSTEM PROJECT

INDEX OF DRAWINGS

	COVER SHEET
	INDEX OF DRAWINGS AND PROJECT DATA
CIVIL	
C1	EXISTING CONDITIONS
C2	DEMOLITION PLAN
C3	GRADING AND DRAINAGE PLAN
C4	STORM WATER PLAN AND PROFILES
C5	TYPICAL SECTIONS
C6	STANDARD DETAILS
C7	DRAINAGE DETAILS
C8	STORM WATER POLLUTION PREVENTION PLAN
C9	STORM WATER POLLUTION PREVENTION NOTES
SITE UTILITIES	
U1.0	SANITARY SEWER RELOCATION
U2.0	WATER LINE RELOCATION
U3.0	STANDARD UTILITY DETAILS-1
U3.1	STANDARD UTILITY DETAILS-2
U3.2	STANDARD UTILITY DETAILS-3
U3.3	STANDARD UTILITY DETAILS-4
LANDSCAPE (NOT PART OF THIS SUBMITTAL)	
ARCHITECTURAL	
SN.1	OVERALL SITE/KEY PLAN AND SECURITY NOTES
D1.1	OVERALL DEMOLITION SITE PLAN
D1.2	PARTIAL DEMOLITION FLOOR PLAN
D1.3	PARTIAL DEMOLITION FLOOR PLAN
FP.1	FIRE PROTECTION FLOOR PLAN
A1.1	TEMPORARY BAGGAGE HANDLING SYSTEM - PHASE I
A2.1	OVERALL REVISED SITE / FLOOR PLAN
A2.2	REVISED PARTIAL FLOOR PLAN
A2.3	REVISED PARTIAL FLOOR PLAN
A2.4	REVISED PARTIAL FLOOR PLAN
A2.5	FLOOR PLAN AND DETAILS - GUARD SHACK
A2.6	SCHEDULES
A2.7	DOOR AND WINDOW DETAILS
A2.8	WALL TYPES AND DETAILS
A3.1	OVERALL REFLECTED CEILING PLAN
A3.2	PARTIAL REFLECTED CEILING PLAN
A3.3	PARTIAL REFLECTED CEILING PLAN
A3.4	PARTIAL REFLECTED CEILING PLAN
A4.1	ROOF PLAN
A4.2	ROOF DETAILS
A5.1	EXTERIOR BUILDING ELEVATIONS
A5.2	BUILDING SECTIONS
A6.1	WALLS SECTIONS
A6.2	WALLS SECTIONS
A6.3	WALLS SECTIONS
A6.4	WALLS SECTIONS
A6.5	WALLS SECTIONS
A6.6	STAIR SECTION
A7.1	INTERIOR ELEVATIONS
A7.2	INTERIOR ELEVATIONS
A7.3	MILLWORK DETAILS
STRUCTURAL	
S1.0	PARTIAL FOUNDATION PLAN-AREA A, COLUMN FOOTING SCHEDULE AND GENERAL NOTES
S1.1	PARTIAL FOUNDATION PLAN-AREA B
S1.2	FOUNDATION AND ROOFING PLAN, SECTIONS AND COLUMN FOOTING SCHEDULE-TEMPORARY CANOPY
S2.0	PARTIAL ROOF FRAMING PLAN-AREA A, EXTERIOR STAIR FOUNDATION AND FRAMING PLAN AND SECTIONS
S2.1	PARTIAL ROOF FRAMING PLAN-AREA B
S3.0	WALL PANEL ELEVATIONS
S3.1	FOUNDATION AND ROOF FRAMING PLAN AND SECTIONS-GUARD SHACK, TYPICAL METAL STUD DETAILS
S4.0	FOUNDATION SECTIONS
S5.0	ROOF FRAMING SECTIONS
S6.0	TYPICAL DETAILS AND BEAM/BEAM CONNECTION SCHEDULE
S6.1	DRILLED PIER, GRADE BEAM SCHEDULES AND DETAILS
MECHANICAL	
M0.00	MECHANICAL SYMBOLS AND ABBREVIATIONS
M0.01	MECHANICAL SCHEDULES
M0.02	MECHANICAL SCHEDULES
M0.03	MECHANICAL CALCULATIONS
M0.04	MECHANICAL CALCULATIONS
M0.05	MECHANICAL CALCULATION AND ENERGY REPORT
M1.00	DEMOLITION SITE PLAN
M1.01	PARTIAL SITE PLAN
M2.00	OVERALL MECHANICAL DEMOLITION FLOOR PLAN
M2.01	PARTIAL MECHANICAL DEMOLITION FLOOR PLAN
M2.02	PARTIAL MECHANICAL DEMOLITION FLOOR PLAN
M3.00	OVERALL MECHANICAL DEMOLITION PIPING PLAN
M3.01	PARTIAL MECHANICAL DEMOLITION PIPING PLAN
M3.02	PARTIAL MECHANICAL DEMOLITION PIPING PLAN
M4.00	OVERALL MECHANICAL FLOOR PLAN - NEW WORK
M4.01	PARTIAL MECHANICAL FLOOR PLAN - NEW WORK
M4.02	PARTIAL MECHANICAL FLOOR PLAN - NEW WORK
M4.03	PARTIAL MECHANICAL FLOOR PLAN - NEW WORK
M5.00	OVERALL MECHANICAL PIPING PLAN - NEW WORK
M5.01	OVERALL MECHANICAL PIPING PLAN - NEW WORK
M5.02	PARTIAL MECHANICAL PIPING PLAN - NEW WORK
M5.03	PARTIAL MECHANICAL PIPING PLAN - NEW WORK
M6.00	PARTIAL MECHANICAL FLOOR PLAN - NEW WORK
M7.00	PARTIAL MECHANICAL ROOF PLAN - NEW WORK
M8.00	MECHANICAL SECTIONS
M9.00	SCHEMATIC DIAGRAM
M9.01	SCHEMATIC EXISTING DIAGRAM
M10.00	MECHANICAL CONTROLS
M10.01	MECHANICAL CONTROLS
M10.02	MECHANICAL CONTROLS

MECHANICAL (CONT.)	
M11.00	MECHANICAL FIRE PROTECTION - NEW WORK
M12.00	MECHANICAL DETAILS
M12.01	MECHANICAL DETAILS
M12.02	MECHANICAL DETAILS
ELECTRICAL	
E1.0	ELECTRICAL UTILITY SITE PLAN
E2.0	ELECTRICAL DEMOLITION PLAN
E2.1	ELECTRICAL DEMOLITION PLAN
E3.0	LIGHTING ENLARGED FLOOR PLAN
E3.1	LIGHTING ENLARGED FLOOR PLAN
E3.2	LIGHTING ENLARGED FLOOR PLAN
E4.0	POWER AND TEMPORARY FLOOR PLAN
E4.1	POWER AND TEMPORARY FLOOR PLAN
E4.2	POWER AND TEMPORARY FLOOR PLAN
E4.3	POWER AND TEMPORARY FLOOR PLAN
E4.4	RISER DIAGRAM AND PANEL SCHEDULES
E5.0	SPECIAL SYSTEMS ENLARGED FLOOR PLANS
E5.1	SPECIAL SYSTEMS ENLARGED FLOOR PLANS
E5.2	SPECIAL SYSTEMS ENLARGED FLOOR PLANS
E6.0	HVAC POWER ENLARGED FLOOR PLAN
E6.1	HVAC POWER ENLARGED FLOOR PLAN
E6.2	HVAC POWER ENLARGED FLOOR PLAN
E7.0	ELECTRICAL RISER DIAGRAM
E7.1	PANEL SCHEDULES
E7.2	GENERAL NOTES AND DETAILS
E7.3	SPECIAL SYSTEM DETAILS
BAGGAGE HANDLING SYSTEM	
BO.00	COVER PAGE
BO.01	LEGENDS SYMBOLS AND ABBREVIATIONS
BO.02	SHEET LIST
BO.03	CONVEYOR MANIFEST
BO.04	CONVEYOR MANIFEST
BO.05	ISOMETRIC VIEW
BO.06	SINGLE LINE DIAGRAM
BO.07	TSA ALLOCABLE VS NON-ALLOCABLE
B1.00	EXISTING AIRPORT PLAN-OVERALL - BHS SCOPE OF WORK
B1.01	EXISTING - BHS PLAN
B1.02	EXISTING AND DEMO BHS - OVERALL
B1.10	EXISTING AND DEMO BHS - AREA 1
B1.20	EXISTING AND DEMO BHS - AREA 2
B2.00	PROPOSED BHS PLAN - OVERALL
B2.01	PROPOSED BHS PLAN OVERALL - SUBSYSTEMS
B2.11	PROPOSED BHS PLAN - AREA 1 - LOWER CONVEYORS
B2.12	PROPOSED BHS PLAN - AREA 1 - UPPER CONVEYORS
B2.21	PROPOSED BHS PLAN - AREA 2 - LOWER CONVEYORS
B2.22	PROPOSED BHS PLAN - AREA 2 - UPPER CONVEYORS
B2.30	PROPOSED BHS PLAN - AREA 3
B2.40	PROPOSED BHS PLAN - AREA 4
B3.01	ENLARGED CBIS/CBRA PLAN
B3.02	DETAIL PLAN - ENLARGED CBRA PLAN
B3.03	OSR AND BHS CONTROL ROOMS AND EDS REMOVAL PATH
B3.04	TSA IQ POINTS AND EGRESS PATH
B3.05	FAIL SAFE REMOVAL POINTS
B3.06	BHS DETAILS PLANS - CBRA - BSD SCREEN SHOTS
B4.01	BHS SECTIONS
B4.02	BHS SECTIONS
B4.03	BHS SECTIONS
B4.04	BHS SECTIONS
B5.00	BHS CATWALK - OVERALL
B5.10	BHS CATWALK - AREA 1
B5.20	BHS CATWALK - AREA 2
B5.30	BHS CATWALK - AREA 3
B5.40	BHS CATWALK - AREA 4
B6.00	PHASING OVERVIEW - SITE PLAN
B6.01	PHASING OVERVIEW - DEMO
B6.02	BHS PHASING - PHASE 1 - TEMP 1
B6.03	BHS PHASING - PHASE 1 - TEMP 2
B6.04	BHS PHASING - PHASE 1 - TEMP 3
B6.10	BHS PHASING - PHASE 1 - DEMO
B6.20	BHS PHASING - PHASE 2
B6.30	BHS PHASING - PHASE 3
B6.40	BHS PHASING - PHASE 4
B6.50	BHS PHASING - PHASE 5
B7.00	CONTROL STATION DETAILS
B7.01	CONTROL STATION DETAILS
B7.02	SUBSYSTEM E-STOP ZONES AND CONTROLS OVERVIEW
B7.03	SUBSYSTEM E-STOP ZONES AND CONTROLS - AREA 1 LOWER CONVEYORS
B7.04	SUBSYSTEM E-STOP ZONES AND CONTROLS - AREA 1 UPPER CONVEYORS
B7.05	SUBSYSTEM E-STOP ZONES AND CONTROLS - AREA 2 LOWER CONVEYORS
B7.06	SUBSYSTEM E-STOP ZONES AND CONTROLS - AREA 2 UPPER CONVEYORS
B7.07	SUBSYSTEM E-STOP ZONES AND CONTROLS - AREA 4
B7.08	SUBSYSTEM E-STOP ZONES AND CONTROLS - CBRA & MAKE-UP
B7.10	PROPOSED POWER DISTRIBUTION PLAN
B7.11	PROPOSED MCP PLAN - PDP 1
B7.12	PROPOSED MCP PLAN - PDP 2
B7.13	PROPOSED MCP PLAN - PDP 3
B7.14	PROPOSED MCP PLAN - PDP 4
B8.00	LOADING DETAILS
B8.01	LOADING DETAILS
B8.02	ATTACHMENT DETAILS
B8.03	SUPPORT DETAILS
B8.04	SUPPORT DETAILS
B8.05	SUPPORT DETAILS
B8.06	FIRE/SECURITY DETAILS
B8.07	FIRE/SECURITY DETAILS
B8.08	LADDER DETAILS
B8.09	CROSS OVER AND SAFETY GATE DETAILS
B8.10	IMPACT PROTECTION DETAILS
B8.11	SAFETY SIGNAGE
B8.12	SAFETY SIGNAGE

BAGGAGE HANDLING SYSTEM (CONT.)	
B8.13	TYPICAL HIGH SPEED DIVERTER
B8.14	TICKETING CONVEYOR DETAILS
B8.15	CONVEYOR TOP HAT DETAILS

CODE INFORMATION

LEGAL DESCRIPTION:

EL PASO INTERNATIONAL AIRPORT TRACTS UNIT 5, EL PASO, EL PASO COUNTY, TEXAS

ZONING:
(EL PASO ZONING ORDINANCE)

PROJECT IS LOCATED WITHIN EL PASO CITY LIMITS.

EXISTING OCCUPANCY:

ASSEMBLY A-3 AND GROUP B - BUSINESS (IBC SECTION 303)

EXISTING CONSTRUCTION TYPE:

TYPE I B PROTECTED SPRINKLERED (IBC SECTION 602)

EXISTING BUILDING AREA:

- FIRST FLOOR: 237,987 S.F.
- SECOND FLOOR: 154,312 S.F.

TOTAL AREA: 392,299 S.F.

PROJECT OCCUPANCY:
GROUP B - BUSINESS (IBC SECTION 303)

NOTE: SPACES ACCESSORY TO GROUP B OCCUPANCY ARE NOT CONSIDERED SEPARATE OCCUPANCIES.

CONSTRUCTION TYPE:
TYPE I B (ADDITION) (IBC SECTION 602)

ALLOWABLE BUILDING AREA:
UNLIMITED SQUARE FEET (IBC SECTION 503)

ALLOWABLE BUILDING HEIGHT:
11 STORIES (IBC SECTION 503)

BUILDING AREA:

- EXISTING BUILDING: 392,299 S.F.
- NEW ADDITION: 31,913 S.F.

TOTAL AREA: 424,212 S.F.

OCCUPANT LOAD:
(IBC TABLE 1004.1.2)
BAG MAKE UP: 50.3 OCCUPANTS AT NEW ADDITION
CBIS: 38.9 OCCUPANTS AT NEW ADDITION
CBRA: 11.6 OCCUPANTS AT NEW ADDITION

AUTOMATIC SPRINKLER SYSTEM:
(IBC SECTION 903.2.3)
PROVIDED AT EXISTING AND NEW ADDITION

EGRESS WIDTH PER OCCUPANT:
(IBC TABLE 1005.1)
100.8 OCC. X .2" = 20"

(CAPACITY: 20"/0.2": 100 OCCUPANTS

MAXIMUM EXIT ACCESS TRAVEL DISTANCE:
300 FEET (IBC TABLE 1016.1)

MINIMUM NUMBER OF EXITS:
(IBC TABLES 1015.1 & 1004.1.1)

REQUIRED: TWO EXITS (PER STORY)
PROVIDED: 6 EXITS AT ADDITION

FIRE PROTECTION:
(IBC 903)
AUTOMATIC SPRINKLER SYSTEM: PROVIDED
FIRE EXTINGUISHERS: PROVIDED, MAXIMUM TRAVEL DISTANCE TO BE 75'

PLUMBING FIXTURES:
(IBC 903)

CAPACITY OF EXISTING MEN AND WOMEN RESTROOMS AT EAST END OF TICKETING LOBBY.

WOMEN 5 WATER CLOSETS
4 LAVATORIES

MEN 4 WATER CLOSETS
3 URINALS
4 LAVATORIES

NOTE: PER IBC TABLE 2902.1 FOR PASSENGER TERMINALS, EXISTING RESTROOM FACILITIES WILL ACCOMMODATE 2500 WOMEN AND 3000 MEN

LANDSCAPE REQUIREMENTS:
CITY OF EL PASO ZONING ORDINANCE

NOTE: CURRENT PROJECT WILL BE WAIVED DUE TO PENDING LANDSCAPE IMPROVEMENT PROJECT

PARKING REQUIREMENTS:
CITY OF EL PASO ZONING ORDINANCE

NO CHANGE TO EXISTING PARKING

CODE REFERENCES

- 2009 INTERNATIONAL BUILDING CODE
- 2009 INTERNATIONAL PLUMBING CODE
- 2009 INTERNATIONAL MECHANICAL CODE
- 2009 INTERNATIONAL ELECTRICAL CODE
- 2009 INTERNATIONAL FIRE CODE
- CITY OF EL PASO ZONING ORDINANCE
- TEXAS ACCESSIBILITY STANDARDS (T.A.S.)

MATERIALS LEGEND

PRECAST CONCRETE PANEL EXT. WALL W/ GYP. BD. FURR OUT

CONCRETE MASONRY UNIT

GYPSUM BOARD PARTITION

SYMBOLS LEGEND

SEE KEYED NOTES

DOOR NUMBER

WINDOW TYPE

WALL TYPES

ACCESSIBLE FIXTURES

OUTDOOR WORK AREA — ROOM NAME AND NUMBER

EXTERIOR ELEVATION

INTERIOR ELEVATION

REFERENCE ELEVATION

+460.50 — SPOT ELEVATION

REVISION

REVISION CLOUD

BREAK LINE

PROPERTY LINES, BOUNDARY LINES

COLUMN GRID LINE

BUILDING AND WALL SECTION

ENLARGED FLOOR PLAN/DETAIL REFERENCE

KEY PLAN

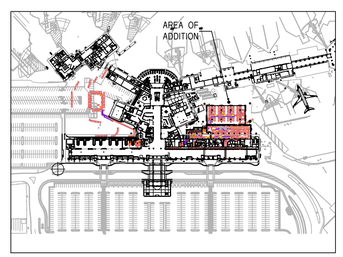

REFERENCES - BENCHMARK

DATE	REVISIONS	BY

CONSULTANT'S NAME

mijares ● mora
ARCHITECTS INC.
111 N. FESTIVAL
EL PASO, TEXAS 79912
TEL: 915-542-1991 FAX: 542-1994

ARCHITECT'S SEAL

REGISTERED ARCHITECT JORGE L. MORA 12526 STATE OF TEXAS
DATE 5-31-16

SCALE

DATE	MAY 2016
DESIGN BY	MM/RMP
DRAWN BY	S.D.
CHKD. BY	S.D.
APPD. BY	JLM
JOB NO.	1603

PROJECT NAME

EL PASO INTERNATIONAL AIRPORT
CHECKED BAGGAGE INSPECTION SYSTEM
6701 CONVAIR RD. EL PASO, TEXAS

EL PASO INTERNATIONAL

CITY OF EL PASO

SHEET TITLE

INDEX OF DRAWINGS & PROJECT DATA

INDEX

FILE NO. 238512

SHEET___OF___

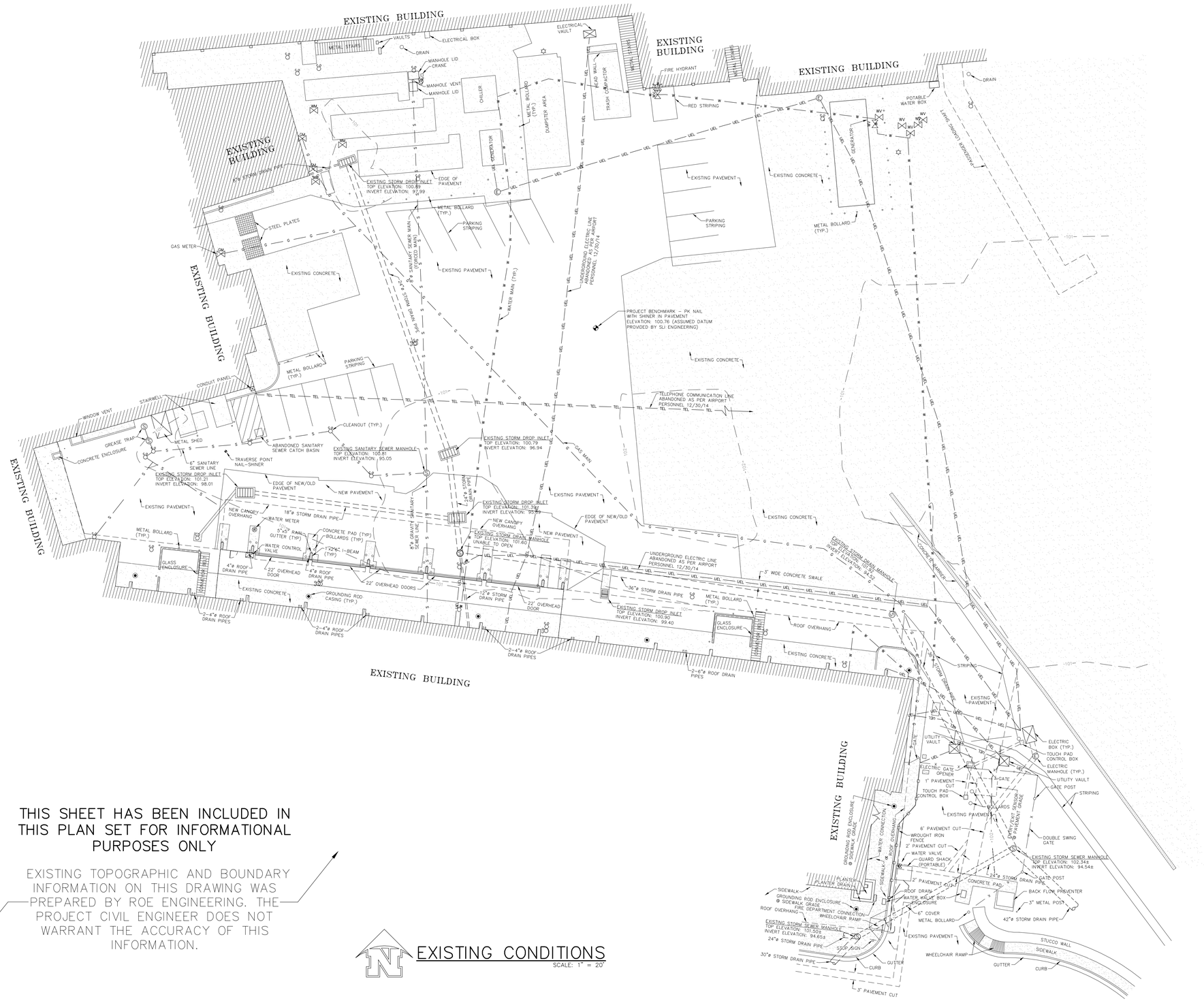

THIS SHEET HAS BEEN INCLUDED IN THIS PLAN SET FOR INFORMATIONAL PURPOSES ONLY

EXISTING TOPOGRAPHIC AND BOUNDARY INFORMATION ON THIS DRAWING WAS PREPARED BY ROE ENGINEERING. THE PROJECT CIVIL ENGINEER DOES NOT WARRANT THE ACCURACY OF THIS INFORMATION.

EXISTING CONDITIONS

SCALE: 1" = 20'

LEGEND

- GROUNDING ROD CASING
- WATER VALVE
- WATER METER
- GAS METER
- CLEAN OUT
- ELECTRIC MANHOLE

PRIMARY BENCHMARK

FOUND PK NAIL WITH SHINER IN PAVEMENT ELEVATION: 101.76 (ASSUMED ELEVATION PROVIDED BY SLI ENGINEERING)

ROE ENGINEERING, LC
TBPE FIRM# F-2103 TBPLS FIRM# 10060700
601 N. Cotton St. Suite No.6 El Paso, TX 79902
(915) 533-1418 FAX: (915) 533-4972

REFERENCES -- BENCHMARK

DATE	REVISIONS	BY

CONSULTANT'S NAME

mijares mora ARCHITECTS INC.
111 N. FESTIVAL
EL PASO, TEXAS, 79912
TEL: 915-542-1991 FAX: 542-1994

ENGINEER'S SEAL

SCALE

DATE	MAY 27, 2016
DESIGN BY	D.J.F.
DRAWN BY	CADD
CHKD. BY	J.M.R.
APPD. BY	R.A.G.
JOB NO.	1431

PROJECT NAME

EL PASO INTERNATIONAL AIRPORT
CHECKED BAGGAGE INSPECTION SYSTEM

6701 CONVAIR RD. EL PASO, TEXAS

EL PASO INTERNATIONAL AIRPORT

CITY OF EL PASO

SHEET TITLE

EXISTING CONDITIONS

C-1

FILE NO. 238512

SHEET 1 OF 9

May 27,2016 10:31am bnji
Q:\Active Drawings\1431 EPIA Baggage Check Addition\Civil\100% CD Final\C1 - Existing Conditions.dwg

EXISTING BUILDING
EXISTING BUILDING
EXISTING BUILDING
EXISTING BUILDING
EXISTING BUILDING
EXISTING BUILDING
LIMITS OF
LIMITS OF
LIMITS OF
EXISTING CONCRETE
EXISTING PAVEMENT
NEW PAVEMENT
EXISTING STORM DROP INLET
TOP ELEVATION: 100.89
INVERT ELEVATION: 97.39
EDGE OF PAVEMENT
PROJECT BENCHMARK: 4PK NAIL WITH SHINER IN PAVEMENT ELEVATION: 100.76 (ASSUMED DATUM PROVIDED BY SLI ENGINEERING)
TELEPHONE COMMUNICATION LINE ABANDONED AS PER AT&T PERSONNEL 11/17/2014
EXISTING STORM DROP INLET
TOP ELEVATION: 100.64
INVERT ELEVATION: 96.9
EXISTING SANITARY SEWER MANHOLE
TOP ELEVATION: 100.64
INVERT ELEVATION: 94.9
EXISTING STORM DROP INLET
TOP ELEVATION: 100.64
INVERT ELEVATION: 96

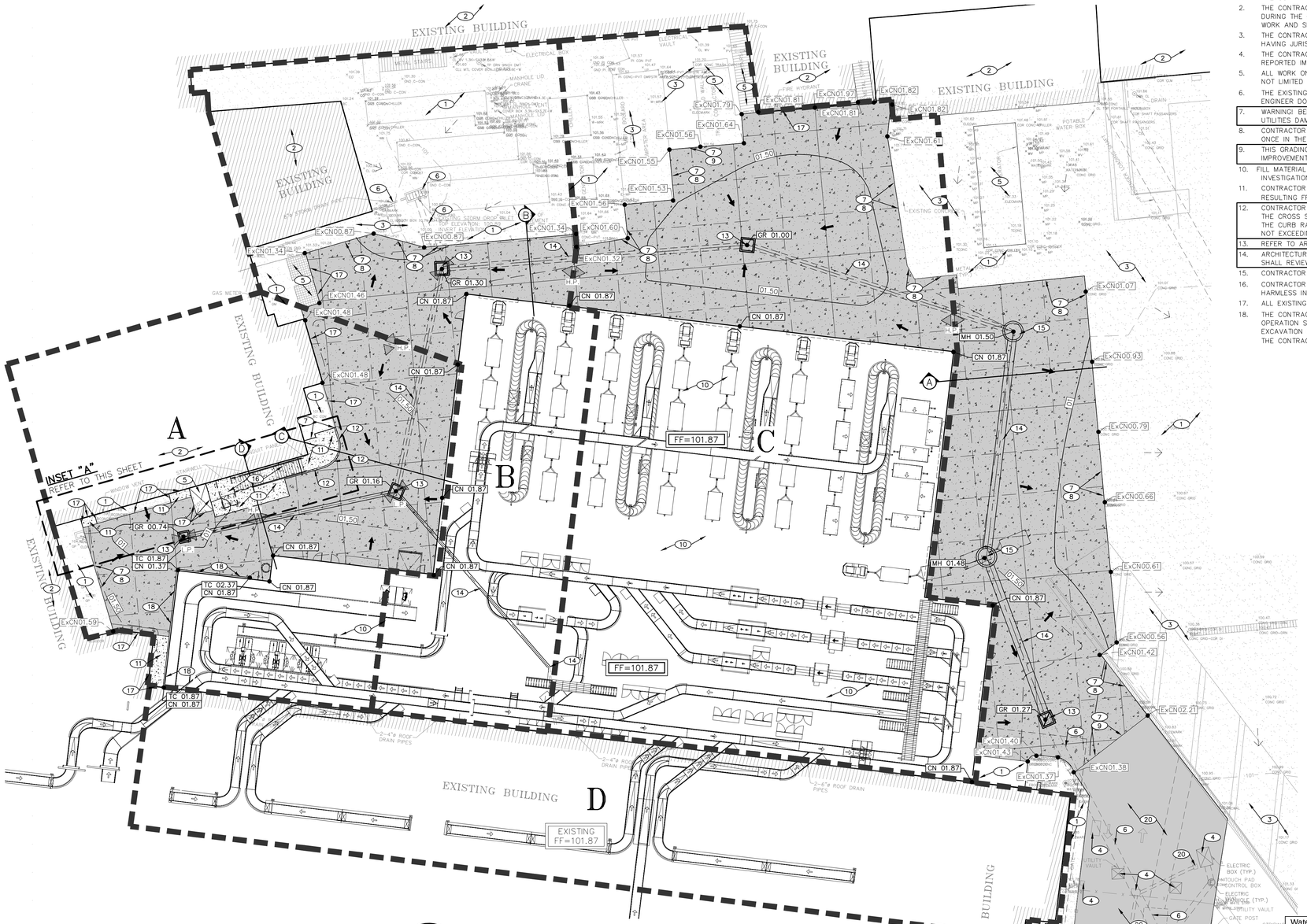

GRADING AND DRAINAGE PLAN

SCALE: 1" = 20'

NORTH

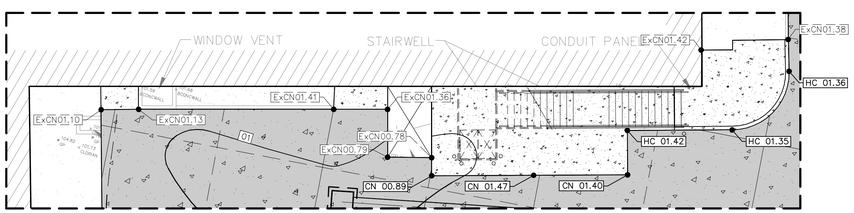

INSET "A"

SCALE: 1" = 10'

NORTH

GENERAL NOTES

1. THE CONTRACTOR **MUST** VISIT AND FAMILIARIZE HIMSELF WITH THE PROJECT SITE PRIOR TO SUBMITTING HIS BID.
2. THE CONTRACTOR SHALL SCHEDULE AND PERFORM HIS WORK SO AS TO ENSURE THE SAFE AND SUFFICIENT PASSAGE OF STORMWATER RUNOFF DURING THE COURSE OF HIS OPERATIONS. ALL REQUIRED LABOR, TOOLS, EQUIPMENT, AND SUPERVISION SHALL BE CONSIDERED INCIDENTAL TO THE WORK AND SHALL BE PROVIDED AT NO ADDITIONAL COST TO OWNER.
3. THE CONTRACTOR SHALL COORDINATE THE CONSTRUCTION SCHEDULE WITH THE OWNER, ALL AFFECTED UTILITY COMPANIES, AND ALL OTHER ENTITIES HAVING JURISDICTION OVER THE PROJECT.
4. THE CONTRACTOR SHALL VERIFY ALL DIMENSIONS AND GRADES PRIOR TO COMMENCING WITH THE WORK. ANY DISCREPANCIES NOTED SHALL BE REPORTED IMMEDIATELY TO THE PROJECT ARCHITECT AND CIVIL ENGINEER, RESPECTIVELY.
5. ALL WORK ON THIS PROJECT SHALL BE PERFORMED IN STRICT CONFORMANCE WITH ALL CURRENT SAFETY CODES AND STANDARDS, INCLUDING BUT NOT LIMITED TO, OSHA REQUIREMENTS.
6. THE EXISTING TOPOGRAPHIC/BOUNDARY INFORMATION ON THIS DRAWING WAS OBTAINED FROM A **PROFESSIONAL LAND SURVEYOR.** PROJECT CIVIL ENGINEER DOES NOT WARRANT THE ACCURACY OF THIS INFORMATION.
7. WARNING! BEFORE EXCAVATING, CONTRACTOR SHALL LOCATE AND PROTECT ALL UNDERGROUND UTILITY LINES. CONTRACTOR SHALL REPLACE ANY UTILITIES DAMAGED DURING CONSTRUCTION, AT NO ADDITIONAL COST TO OWNER.
8. CONTRACTOR SHALL WATER CONSTRUCTION SITE AREA A MINIMUM OF TWICE A DAY TO KEEP DUST TO A MINIMUM – ONCE IN THE MORNING AND ONCE IN THE AFTERNOON.
9. THIS GRADING PLAN SHALL BE COORDINATED WITH THE ARCHITECTURAL, MECHANICAL, ELECTRICAL, GAS, ETC... CONSTRUCTION DRAWINGS FOR SITE IMPROVEMENT DETAILS, DIMENSIONS, TRENCHING AND LAYOUT.
10. FILL MATERIAL FOR SITE GRADING AND BACKFILL MAY CONSIST OF ON SITE AND/OR IMPORTED MATERIALS IN COMPLIANCE WITH THE GEOTECHNICAL INVESTIGATION
11. CONTRACTOR SHALL BE RESPONSIBLE FOR THE PROTECTION OF EXISTING IMPROVEMENTS IN THE PROJECT AREA AND ITS VICINITY. ANY DAMAGES RESULTING FROM CONTRACTOR'S WORK SHALL BE REPAIRED TO ITS ORIGINAL CONDITION BY CONTRACTOR, AT NO COST TO THE OWNER.
12. CONTRACTOR SHALL INSURE THE FOLLOWING: ALL ACCESSIBLE ROUTES SHALL NOT EXCEED A RUNNING SLOPE GREATER THAN 1:20. NO WHERE SHALL THE CROSS SLOPE OF AN ACCESSIBLE ROUTE EXCEED 1:50. MAXIMUM SLOPES OF ADJOINING GUTTERS, ROAD SURFACE IMMEDIATELY ADJACENT TO THE CURB RAMP, OR ACCESSIBLE ROUTE SHALL NOT EXCEED 1:20. PARKING SPACES AND ACCESS AISLES SHALL BE LEVEL WITH SURFACE SLOPES NOT EXCEEDING 1:50 IN ALL DIRECTIONS. NEW WHEELCHAIR RAMPS SHALL NOT EXCEED A SLOPE OF 1:12.
13. REFER TO ARCHITECTURAL DRAWINGS FOR DETAILS OF ALL PROPOSED SITE IMPROVEMENTS.
14. ARCHITECTURAL, CIVIL, STRUCTURAL, MECHANICAL AND ELECTRICAL DRAWINGS ARE INTERRELATED. GENERAL CONTRACTOR AND ALL SUBCONTRACTORS SHALL REVIEW AND COORDINATE THE ENTIRE SET OF DRAWINGS AND PROJECT MANUAL TO ESTABLISH PROJECT COST.
15. CONTRACTOR SHALL COMPLY WITH ALL FEDERAL, STATE AND LOCAL ENVIRONMENTAL REGULATIONS DURING CONSTRUCTION ACTIVITY.
16. CONTRACTOR SHALL BE RESPONSIBLE FOR ANY AND ALL ENVIRONMENTAL FINES RESULTING FROM HIS/HER WORK AND SHALL HOLD THE OWNER HARMLESS IN SUCH CASES.
17. ALL EXISTING VEGETATION WITHIN THE GRADING LIMITS SHALL BE REMOVED AND PROPERLY DISPOSED UNLESS OTHERWISE INDICATED.
18. THE CONTRACTOR SHALL EXERCISE CARE TO PRESERVE THE AREAS MARKED AS "TO REMAIN UNDISTURBED," AND SHALL CONDUCT HIS CONSTRUCTION OPERATION SO AS TO PREVENT ANY DAMAGE TO EXISTING FEATURES. EXCEPT WHERE CLEARING IS REQUIRED FOR PERMANENT WORK AND FOR EXCAVATION OPERATIONS. EXISTING BUILDING, FEATURES, AND OTHER STRUCTURES SHALL BE PROTECTED FROM DAMAGE WHICH MAY BE CAUSED BY THE CONTRACTOR'S CONSTRUCTION OPERATIONS AND EQUIPMENT.

KEY NOTES:

1. EXISTING AREA TO REMAIN UNDISTURBED.
2. EXISTING BUILDING TO REMAIN UNDISTURBED
3. EXISTING PAVEMENT TO REMAIN UNDISTURBED.
4. EXISTING UTILITY STRUCTURE, UNDERGROUND LINES AND ALL ASSOCIATED APPURTENANCES TO REMAIN UNDISTURBED. CONTRACTOR TO GRADE AROUND UTILITY STRUCTURE (WHERE APPLICABLE).
5. EXISTING STRUCTURE AND ALL ASSOCIATED APPURTENANCES TO REMAIN UNDISTURBED.
6. EXISTING INLET GRATE/DRAINAGE PIPE TO REMAIN UNDISTURBED.
7. NEATLY SAWCUT AND MATCH EXISTING ELEVATIONS. (EXPANSION JOINT REQUIRED WHERE IMPROVEMENTS ABUT EXISTING STRUCTURES SUCH AS CURBS, SIDEWALKS, BUILDINGS) REFER TO DETAILS ON SHEET C–6.
8. JUNCTURE OF NEW REINFORCED CONCRETE PAVEMENT AND EXISTING CONCRETE PAVEMENT. REFER TO DETAIL 5 ON SHEET C–6.
9. JUNCTURE OF NEW REINFORCED CONCRETE PAVEMENT AND EXISTING ASPHALT PAVEMENT. REFER TO DETAIL 6 ON SHEET C–5.
10. NEW CHECKED BAGGAGE INSPECTION BUILDING. REFER TO ARCHITECTURAL PLANS.
11. NEW 4" THICK CONCRETE SIDEWALK. REFER TO DETAIL 4 ON SHEET C–6.
12. NEW HEADER CURB. REFER TO DETAIL 2 ON SHEET C–6.
13. NEW GRATE INLET. REFER TO DETAIL 11 ON SHEET C–7.
14. NEW SUBSURFACE STORM DRAINAGE SYSTEM. REFER TO PLAN AND PROFILE SHEET C–4.
15. NEW PRECAST CONCRETE MANHOLE. REFER TO PLAN AND PROFILE SHEET C–4.
16. NEW STAIRWELL. REFER TO ARCHITECTURAL PLANS FOR DETAILS.
17. MATCH EXISTING ELEVATIONS.
18. NEW STANDARD CURB. REFER TO DETAIL 2 ON SHEET C–6.
19. NEW GUARD SHACK. REFER TO ARCHITECTURAL PLANS.
20. CONTRACTOR TO COORDINATE CIVIL PLANS WITH ALL NEW IMPROVEMENTS FOR UNDERGROUND UTILITIES BEING CALLED OUT ON ELECTRICAL, GAS, COMMUNICATION, WATER, AND SANITARY SEWER PLANS IN THIS AREA. ALSO, REFER TO GENERAL NOTE #9 THIS SHEET

LEGEND:

- 100 — EXISTING CONTOURS
- XX — FINAL CONTOUR ELEVATION
- SWALE
- FINAL CONTOUR ELEVATION
- H.P. — HIGH POINT
- L.P. — LOW POINT
- NEW DRAINAGE FLOW DIRECTION
- EXISTING DRAINAGE FLOW DIRECTION
- FF=XXXX.XX — FINISHED FLOOR ELEVATION
- NEW 6.5" THICK REINFORCED CONCRETE PAVEMENT. REFER TO DETAIL 1 ON SHEET C–6.
- NEW HEAT SCARIFICATION AND OVERLAY. REFER TO SPECIFICATIONS FOR ADDITIONAL INFORMATION.
- NEW 4" THICK CONCRETE SIDEWALK. REFER TO DETAIL 4 ON SHEET C–6.
- CN XX.XX — TOP OF CONCRETE ELEVATION
- TC XX.XX — TOP OF CURB ELEVATION
- HC XX.XX — TOP OF HEADER CURB ELEVATION
- GR XX.XX — TOP OF GRATE ELEVATION
- ExCN XX.XX — EXISTING CONCRETE ELEVATION (CONTRACTOR TO FIELD VERIFY)
- ExTC XX.XX — EXISTING STORM DRAIN PIPE. (CONTRACTOR TO FIELD VERIFY)
- A — DRAINAGE AREA LABEL

Watershed (1)	Area SF (2)	Area (AC) (2)	C (5)	TC (3)	I 100 (4)	Q (cfs) (6)
A	17131	0.39	0.95	10	5.37	2.01
B	19061	0.44	0.95	10	5.37	2.23
C	33111	0.76	0.95	10	5.37	3.88
D*	17131	0.39	0.95	10	5.37	2.01

*TO EXISTING ROOF DRAINS. CONTRACTOR TO FIELD VERIFY.

REFERENCE: CITY OF EL PASO SUBDIVISION STANDARDS

(1) WATERSHED AREA IDENTIFICATION

(2) AREA FROM DRAINAGE PLAN

(3) TIME OF CONCENTRATION: TC = T (OVERLAND) + T (GUTTER) (MINIMUM = 10 MIN.)

(4) RAINFALL INTENSITY, 50 OR 100 YEAR STORM = EAST SIDE DRAINAGE REGION TABLE 4–3: EASTSIDE INTENSITY EQUATIONS.

(5) RUNOFF COEFFICIENT

WEIGHTED $C = \frac{\Sigma\ Cn\ An}{\Sigma\ An}$

C= WEIGHTED RUNOFF COEFFICIENT
n= nth SUB–AREA
Cn= RUNOFF COEFFICIENT FOR THE nth SUB–AREA
(TABLE 4–5 DRAINAGE DESIGN MANUAL)

An= nth SUB–AREA SIZE, IN ACRES

(6) Q(DESIGN STORM) = C X A X I (DESIGN STORM)

BENCHMARK:
FOUND PK NAIL WITH SHINER IN PAVEMENT ELEVATION: 101.76 (ASSUMED ELEVATION PROVIDED BY SLI ENGINEERING)

FLOOD ZONE:
ACCORDING TO THE FEDERAL EMERGENCY MANAGEMENT AGENCY FLOOD INSURANCE RATE MAP COMMUNITY PANEL NO 4802140035B, DATED OCTOBER 15, 1982 THIS PROPERTY IS IN FLOOD HAZARD ZONE C.

WARNING! BEFORE YOU DIG

COORDINATION WITH UTILITIES:

CONTRACTOR SHALL CONTACT ALL UTILITY COMPANIES PRIOR TO ANY EXCAVATION AND/OR RELOCATION OF EXISTING UTILITIES ENCOUNTERED DURING CONSTRUCTION WORK.

TEXAS GAS SERVICE
4700 POLLARD STREET
EL PASO, TEXAS 79930
(800) 344–8377

EL PASO ELECTRIC CO.
501 WEST SAN ANTONIO STREET
EL PASO, TEXAS 79901
(800) 245–4545

EL PASO WATER UTILITIES PUBLIC SERVICE BOARD
1154 HAWKINS BLVD.
EL PASO, TEXAS 79925
(800) 344–8377

TIME WARNER CABLE
820 CONCORD STREET
EL PASO, TEXAS 79906
(800) 344–8377

AT&T COMMUNICATIONS
11200 PELLICANO DRIVE
EL PASO, TEXAS 79935
(800) 344–8377

QWEST COMMUNICATION
1095 DONIPHAN PARK CIRCLE
EL PASO, TEXAS 79922
(915) 494–4493

VERIZON BUSINESS MCI COMMUNICATIONS
2400 N. GLENVILLE RD.
RICHARDSON, TEXAS 75082
(800) 624–9675

CITY OF EL PASO STREET DEPARTMENT
7969 SAN PAULO DR
EL PASO, TEXAS 79907
(915) 621–6750

TEXAS EXCAVATION SAFETY SYSTEM (DIG TESS)
ANYWHERE IN TEXAS
(800) DIG–TESS
(800) 344–8377

QUANTUM engineering consultants incorporated
414 Executive Center Blvd
Ste 200 El Paso TX 79902
P 915.532.7272
F 915.532.7373
Texas Registered Engineering Firm F-005146

The seal appearing on this document was authorized by Robert A. Gonzales, P.E. 69920.
Unauthorized alteration of an engineer's seal or falsification to the responsible engineer is an offense under the Texas Engineering Practice Act.
Alteration of a sealed document without proper notification to the responsible engineer is an offense under the Texas Engineering Practice Act.

REFERENCES -- BENCHMARK

DATE	REVISIONS	BY

CONSULTANT'S NAME

mijares ◎ mora
ARCHITECTS INC.
111 N. EVERTON
TEL: 915-542-1991
EL PASO, TEXAS 79912
FAX: 542-1944

ENGINEER'S SEAL

ROBERT A. GONZALES 69920 REGISTERED PROFESSIONAL ENGINEER TEXAS

5/27/16

SCALE

DATE	MAY 27, 2016
DESIGN BY	DJF
DRAWN BY	CADD
CHKD. BY	JMR
APPD. BY	RAG
JOB NO.	1431

PROJECT NAME

EL PASO INTERNATIONAL AIRPORT CHECKED BAGGAGE INSPECTION SYSTEM

6701 CONVAIR RD

EL PASO, TEXAS

EL PASO INTERNATIONAL AIRPORT

CITY OF EL PASO

SHEET TITLE

GRADING AND DRAINAGE PLAN

C-3

FILE NO. 238512

SHEET 3 OF 9

May 27,2016 10:49am brzj
Q:\Active Drawings\1431 EPIA Baggage Check Addition\Civil\100% CD Final\C3 - Grading Drainage Plan.dwg

LEGEND:

- 100 — EXISTING CONTOURS
- XX — FINAL CONTOUR ELEVATION
- SWALE
- H.P. — HIGH POINT
- L.P. — LOW POINT
- NEW DRAINAGE FLOW DIRECTION
- EXISTING DRAINAGE FLOW DIRECTION
- FF=XXXX.XX — FINISHED FLOOR ELEVATION
- NEW REINFORCED CONCRETE PAVEMENT. REFER TO DETAIL 1 ON SHEET C-6.
- HEAT SCARIFICATION AND OVERLAY. REFER TO SPECIFICATIONS FOR ADDITIONAL INFORMATION
- NEW CONCRETE SIDEWALK. REFER TO DETAIL 4 ON SHEET C-6.

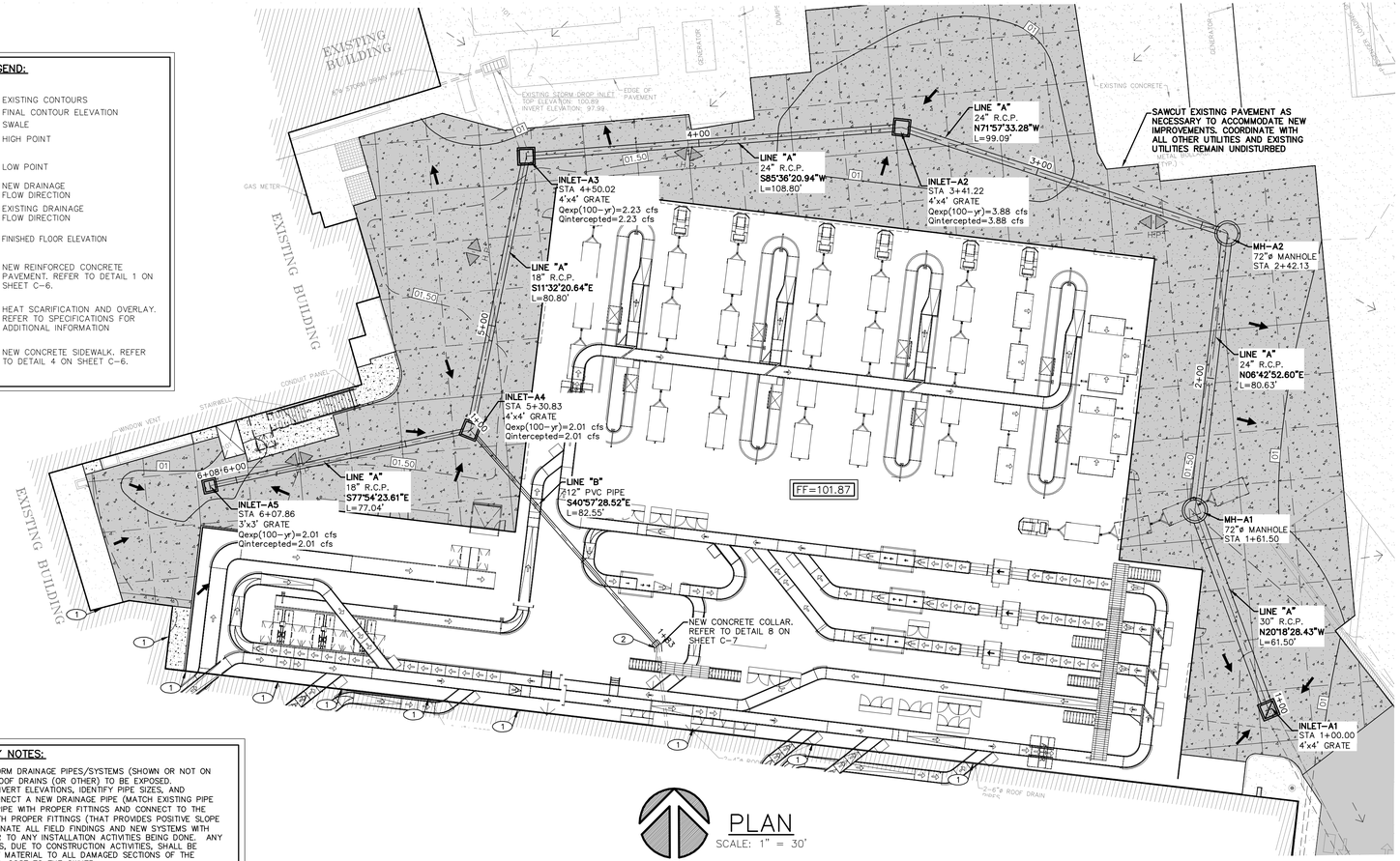

PLAN

SCALE: 1" = 30'

KEY NOTES:

1. ALL DISCOVERED SUBSURFACE STORM DRAINAGE PIPES/SYSTEMS (SHOWN OR NOT ON CONSTRUCTION DOCUMENTS) FOR ROOF DRAINS (OR OTHER) TO BE EXPOSED. CONTRACTOR IS TO FIELD VERIFY INVERT ELEVATIONS, IDENTIFY PIPE SIZES, AND MATERIAL. CONTRACTOR SHALL CONNECT A NEW DRAINAGE PIPE (MATCH EXISTING PIPE SIZE AND MATERIAL) TO EXISTING PIPE WITH PROPER FITTINGS AND CONNECT TO THE NEAREST PROPOSED INLET/PIPE WITH PROPER FITTINGS (THAT PROVIDES POSITIVE SLOPE TO INLET). CONTRACTOR TO COORDINATE ALL FIELD FINDINGS AND NEW SYSTEMS WITH THE PROJECT CIVIL ENGINER PRIOR TO ANY INSTALLATION ACTIVITIES BEING DONE. ANY DAMAGES TO THE EXISTING SYSTEMS, DUE TO CONSTRUCTION ACTIVITIES, SHALL BE REMOVED AND REPLACED WITH NEW MATERIAL TO ALL DAMAGED SECTIONS OF THE EXISTING SYSTEM AT NO ADDITIONAL COST TO THE OWNER.

2. CONTRACTOR TO CONNECT NEW 12" DIA. A-2000 PIPE TO EXISTING SUBSURFACE SYSTEM AT AN EXISTING LOCATION/INVERT THAT PROVIDES A MINIMUM SLOPE OF 0.38% TO INLET -A4. CONTRACTOR TO FIELD VERIFY AND COORDINATE WITH PROJECT CIVIL ENGINEER. EXISTING SUBSURFACE ROOF DRAINAGE SYSTEM TO REMAIN UNDISTURBED DURING THE CONSTRUCTION PROCESS. CONTRACTOR TO REMOVE AND REPLACE WITH NEW, ALL DAMAGED SECTIONS OF THE EXISTING SYSTEM AT NO ADDITIONAL COST TO THE OWNER. CONTRACTOR TO TEST IN ACCORDANCE WITH MANUFACTURER'S RECOMMENDATIONS.

TYPICAL GENERAL NOTES FOR ALL STORM DRAIN PLAN AND PROFILE SHEETS:

1. IT SHALL BE THE CONTRACTOR'S RESPONSIBILITY TO CONTACT ALL UTILITY COMPANIES FOR THE EXACT LOCATION OF UNDERGROUND AND OVERHEAD UTILITIES INCLUDING UTILITIES NOT SHOWN ON PLANS. THE CONTRACTOR SHALL PROTECT ALL THE EXISTING UNDERGROUND AND OVERHEAD STRUCTURES AND UTILITIES DURING CONSTRUCTION.
2. CONTRACTOR IS RESPONSIBLE FOR VERIFYING ALL DIMENSIONS AND ELEVATIONS ON SITE AND SHALL CONTACT THE DESIGN ENGINEER AND REPORT ANY DISCREPANCIES, ON PLANS PRIOR TO COMMENCING WORK.
3. INSTALL A TRENCH SAFETY SYSTEM FOR ALL TRENCHES EXCEEDING A DEPTH OF FIVE FEET (5') AS PER OSHA STANDARDS. CONTRACTOR TO SUBMIT A TRENCH SAFETY PLAN FOR APPROVAL PRIOR TO ANY EXCAVATION WORK.
4. THE CONTRACTOR WILL COORDINATE ALL UTILITY REMOVAL AND RELOCATIONS WITH THE APPROPRIATE UTILITY COMPANIES INCLUDING, BUT NOT LIMITED TO, THE EL PASO WATER UTILITIES, EL PASO ELECTRIC COMPANY, TEXAS GAS SERVICE, AT&T COMMUNICATIONS, ETC.
5. ALL STORM DRAIN STATIONING IS TAKING FROM CENTER TO CENTER OF EACH STRUCTURE.
6. RAM-NEK JOINT SEALANT SHALL BE USED ON ALL REINFORCED CONCRETE PIPE/BOX JOINTS AS SPECIFIED BY MANUFACTURER.
7. ALL WORK ON THIS PROJECT SHALL BE PERFORM AND STRICT CONFORMANCE WITH ALL CURRENT SAFETY CODES AND STANDARDS, INCLUDING BUT NOT LIMITED TO ALL OSHA REQUIREMENTS.
8. CONTRACTOR SHALL BE RESPONSIBLE FOR THE PROTECTION OF EXISTING AND/OR NEWLY CONSTRUCTED IMPROVEMENTS IN THE PROJECT AREA AND ITS VICINITY. ANY DAMAGES RESULTING FROM CONTRACTOR'S WORK AND/OR VANDALISM SHALL BE REPAIRED TO ITS ORIGINAL CONDITION BY CONTRACTOR, AT NO ADDITIONAL COST TO THE OWNER.
9. CONTRACTOR SHALL COMPLY WITH ALL FEDERAL, STATE AND LOCAL ENVIRONMENTAL REGULATIONS DURING CONSTRUCTION ACTIVITY.
10. CONTRACTOR SHALL BE RESPONSIBLE FOR ANY AND ALL ENVIRONMENTAL FINES RESULTING FROM HIS/HER WORK AND SHALL HOLD THE OWNER HARMLESS ON SUCH CASES.
11. EXISTING GAS MAINS CURRENTLY IN SERVICE MUST REMAIN IN SERVICE THROUGHOUT CONSTRUCTION. CONTRACTOR IS RESPONSIBLE FOR PROTECTING EXISTING GAS MAIN (INCLUDING SERVICE LINES) FROM DAMAGE AS A RESULT OF THE CONSTRUCTION ACTIVITIES.
12. IN THE EVENT THAT EXISTING GAS MAINS ARE IN CONFLICT WITH CONSTRUCTION – CONTRACTOR MUST COORDINATE WITH TEXAS GAS SERVICE COMPANY AND ALLOW 2 WEEKS WITHIN THE CITY OF EL PASO CONSTRUCTION SCHEDULE FOR RELOCATION OF HIGH PRESSURE GAS MAINS AND INTERMEDIATE GAS MAINS.
13. CALL FOR LINE SPOT BEFORE BEGINNING CONSTRUCTION OR EXCAVATION. TGS RECOMMENDS THAT CONTRACTOR CALL FOR LINE SPOTS PRIOR TO EXCAVATING IN THE AREA. IT IS REQUIRED THAT CONTRACTOR CALL TGS 48 HOURS PRIOR TO EXCAVATING THE AREA NEAR THE HIGH PRESSURE GAS MAIN.
14. UNDERGROUND/OVERHEAD UTILITIES SHOWN ON THE DRAWINGS ARE FOR DESIGN PURPOSES ONLY. OTHER UTILITIES MAY EXIST WHICH ARE NOT SHOWN ON THE DRAWINGS. THE LOCATION, DEPTH, AND SIZE OF THE UTILITIES SHOWN, ARE FOR INFORMATION PURPOSES ONLY AND SHALL BE VERIFIED BY THE CONTRACTOR.
15. REFER TO CIVIL PLANS FOR PROPOSED JUNCTION BOX DETAILS.
16. SHOULD UNSTABLE SOIL CONDITIONS BE ENCOUNTERED DURING THE STORM DRAINAGE SYSTEM INSTALLATION, CONTRACTOR SHALL USE CEMENT STABILIZED BACKFILL. CEMENT STABILIZED BACKFILL SHALL CONSIST OF 2 SACKS OF CEMENT PER CUBIC YARD OF SOIL.
17. CEMENT STABILIZED BACKFILL SHALL BE PLACED WHEN AN EXISTING SANITARY SEWER OR WATER LINE IS SITUATED ABOVE A PROPOSED STORM SEWER LINE AND IS LESS THAN OR EQUAL TO TWO (2) FEET APART. THE CEMENT STABILIZED BACKFILL SHALL COMPLY WITH THE REQUIREMENTS AS DEFINED: CEMENT STABILIZED BACKFILL: WHERE CEMENT STABILIZED BACKFILL IS SHOWN ON THE PROJECT DOCUMENTS, IT SHALL CONSIST OF A MIXTURE OF SOIL AND TWO SACKS OF TYPE I PORTLAND CEMENT PER CUBIC YARD. SOIL SHALL BE CLASSIFIED AS SW, SP, OR SM BY THE UNIFIED SOIL CLASSIFICATION SYSTEM (USCS) OF ASTM D2487, FREE FROM LUMPS, CLODS OR ORGANIC MATERIAL. IF EXCAVATED MATERIAL IS NOT SUITABLE, PIT-RUN SAND SHALL BE USED. CEMENT STABILIZED BACKFILL SHALL BE MIXED IN A CONCRETE MIXER OR TRANSIT MIXER.
18. REFER TO DRAINAGE DETAILS ON SHEETS C-7.

WARNING! BEFORE YOU DIG

COORDINATION WITH UTILITIES:

CONTRACTOR SHALL CONTACT ALL UTILITY COMPANIES PRIOR TO ANY EXCAVATION AND/OR RELOCATION OF EXISTING UTILITIES ENCOUNTERED DURING CONSTRUCTION WORK.

SOUTHERN UNION GAS CO.
4700 POLLARD STREET
EL PASO, TEXAS 79930
ARMANDO REDA, 680-7243

EL PASO ELECTRIC CO.
501 WEST SAN ANTONIO STREET
EL PASO, TEXAS 79901
MR. BILL ENGELS, (915) 543-4108
MOBILE, (915) 539-7184

EL PASO COUNTY WATER AUTHORITY
1539 PAWLING DRIVE
EL PASO, TEXAS 79927
MR. ROBERT DIAZ DE LEON
(915) 852-3917

SOUTHWESTERN BELL TELEPHONE
11200 PELLICANO DRIVE
EL PASO, TEXAS 79935
JOE GRANADOS
(915) 595-5140

TIME WARNER COMMUNICATIONS
#20 CONCORD STREET
EL PASO, TEXAS 79906
CONSTRUCTION, (915) 775-7414

TEXAS EXCAVATION SAFETY SYSTEM
ANYWHERE IN TEXAS
1-800-344-8377

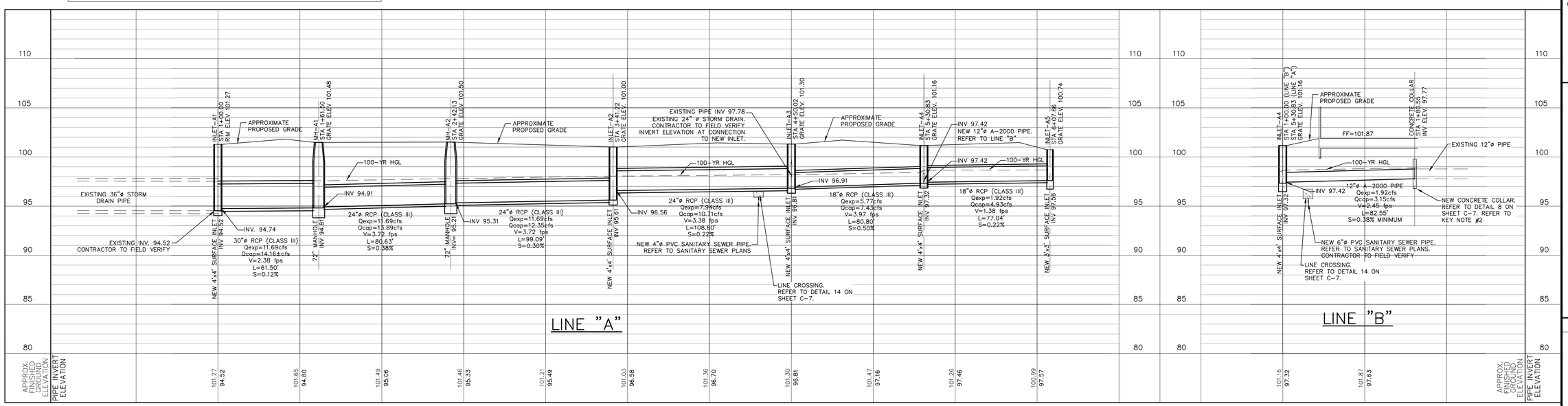

PROFILE

HORIZONTAL SCALE: 1" = 30'
VERTICAL SCALE: 1" = 5'

PROFILE

HORIZONTAL SCALE: 1" = 30'
VERTICAL SCALE: 1" = 5'

REFERENCES -- BENCHMARK

DATE	REVISIONS	BY

CONSULTANT'S NAME

mijares ◎ mora
ARCHITECTS INC.
111 N. ESTRIPA
EL PASO, TEXAS 79912
TEL: 915-542-1991 FAX: 542-1944

ENGINEER'S SEAL

ROBERT A. GONZALES
69920
REGISTERED
PROFESSIONAL ENGINEER
STATE OF TEXAS

5/27/16

The seal appearing on this document was authorized by Robert A. Gonzales, P.E. 69920.
Alteration of a sealed document without proper notification to the responsible engineer is an offense under the Texas Engineering Practice Act.

SCALE

DATE	MAY 27, 2016
DESIGN BY	DJF
DRAWN BY	CADD
CHKD. BY	JMR
APPD. BY	RAG
JOB NO.	1431

PROJECT NAME

EL PASO INTERNATIONAL AIRPORT
CHECKED BAGGAGE INSPECTION SYSTEM
6701 CONVAIR RD EL PASO, TEXAS

EL PASO INTERNATIONAL AIRPORT

CITY OF EL PASO

SHEET TITLE

STORM WATER PLAN AND PROFILE
LINE "A"
STA: 1+00 – 6+07.86
LINE "B"
STA: 1+00 – 1+80.55

C-4

FILE NO. 238512

SHEET 4 OF 19

May 27,2016 11:07am dfb
Q:\Active Drawings\1431 EPIA Baggage Check Addition\Civil\100% CD Final\C4 - Storm P&P Line A,B.dwg

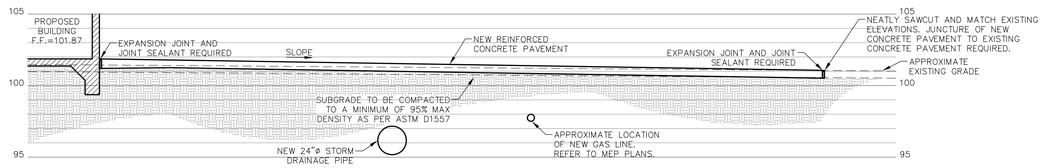

SECTION "A"

SCALE: 1" = 5'

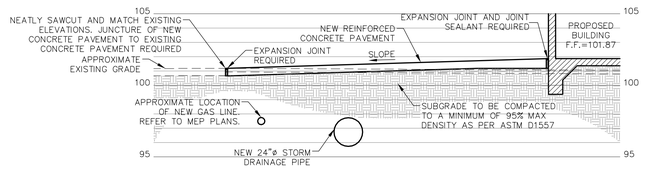

SECTION "B"

SCALE: 1" = 5'

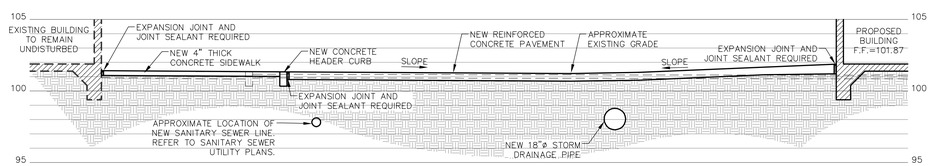

SECTION "C"

SCALE: 1" = 5'

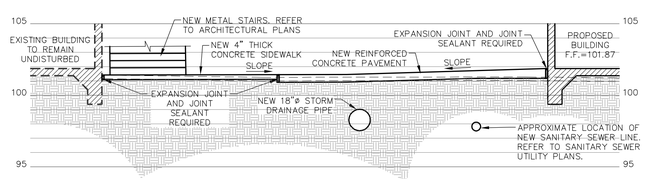

SECTION "D"

SCALE: 1" = 5'

May 27,2016 10:47pm lrrq
Q:\Active Drawings\1431 EPIA Baggage Check Addition\Civil\100% CD Final\C5 - Sections.DWG

QUANTUM engineering consultants incorporated
414 Executive Center Blvd
Ste 200 El Paso TX 79902
P 915.532.7272
F 915.532.7373
Texas Registered Engineering Firm F-005146

REFERENCES -- BENCHMARK

DATE	REVISIONS	BY

CONSULTANT'S NAME

mijares mora ARCHITECTS INC.
111 N. ESTRIPA
EL PASO, TEXAS 79912
TEL: 915-542-1991
FAX: 542-1944

ENGINEER'S SEAL

The seal appearing on this document was authorized by Robert A. Gonzales, P.E. 69920.
Alteration of a sealed document without proper authorization is in violation of the engineer's ethics and is an offense under the Texas Engineering Practice Act.

SCALE

DATE MAY 27, 2016
DESIGN BY DJF
DRAWN BY CADD
CHKD. BY JMR
APPD. BY RAG
JOB NO. 1431

PROJECT NAME

EL PASO INTERNATIONAL AIRPORT
CHECKED BAGGAGE INSPECTION SYSTEM
6701 CONVAIR RD. EL PASO, TEXAS

EL PASO INTERNATIONAL AIRPORT

CITY OF EL PASO

SHEET TITLE

TYPICAL SECTIONS

C-5

FILE NO. 238512

SHEET 5 OF 9

JOINT SEALING COMPOUND NOTE:
WHERE JOINTS IN CONCRETE CONSTRUCTION ARE SHOWN TO BE SEALED, THE JOINT SEALING COMPOUND SHALL BE A TWO-COMPONENT POLYURETHANE SEALANT OR ENGINEER APPROVED EQUIVALENT SPECIFICALLY RECOMMENDED BY THE MANUFACTURER FOR USE ON AIRPORT RUNWAYS AND APRON JOINTS. THE HANDLING PRIOR TO SEALING SHALL BE IN STRICT ACCORDANCE WITH THE RECOMMENDATIONS OF THE MANUFACTURER. JOINT SEALING COMPOUND SHALL BE SIKAFLEX-68TF MIX OR ENGINEER APPROVED EQUIVALENT.

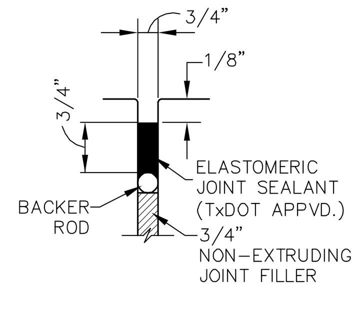

(EXPANSION JOINT)
TYPE "A" JOINT
SCALE: NTS

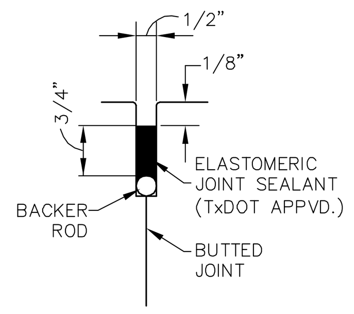

(CONSTRUCTION JOINT)
TYPE "C" JOINT
SCALE: NTS

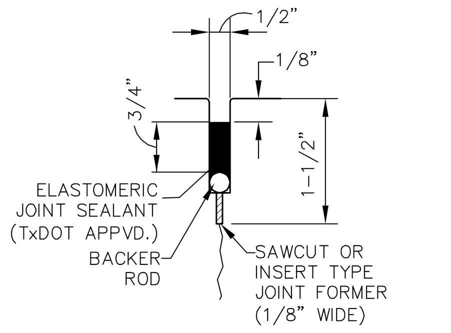

(CONTRACTION JOINT)
TYPE "B" JOINT
SCALE: NTS

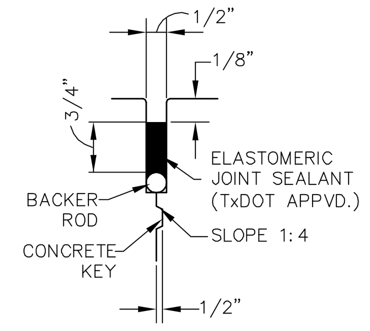

(CONSTRUCTION JOINT)
TYPE "D" JOINT
SCALE: NTS

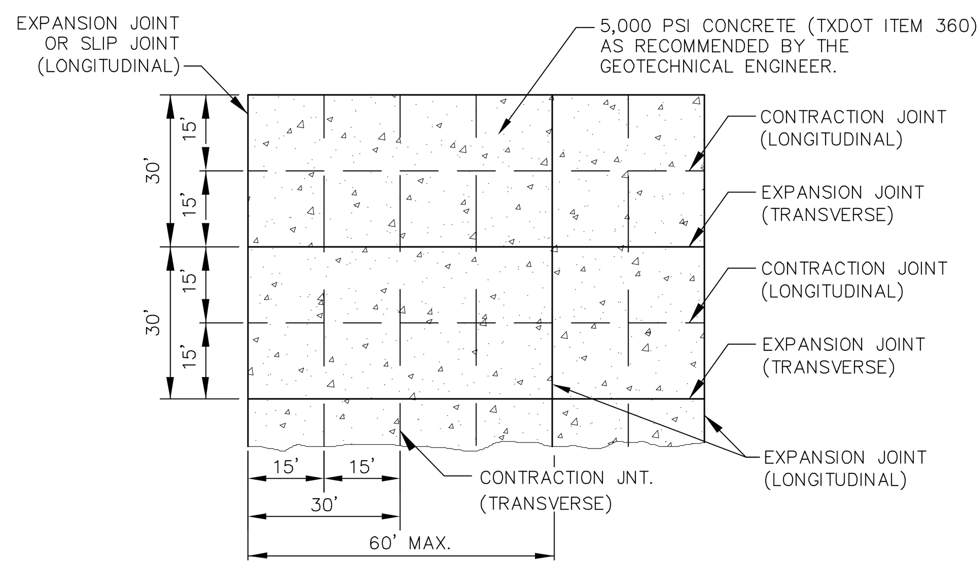

JOINT LAYOUT

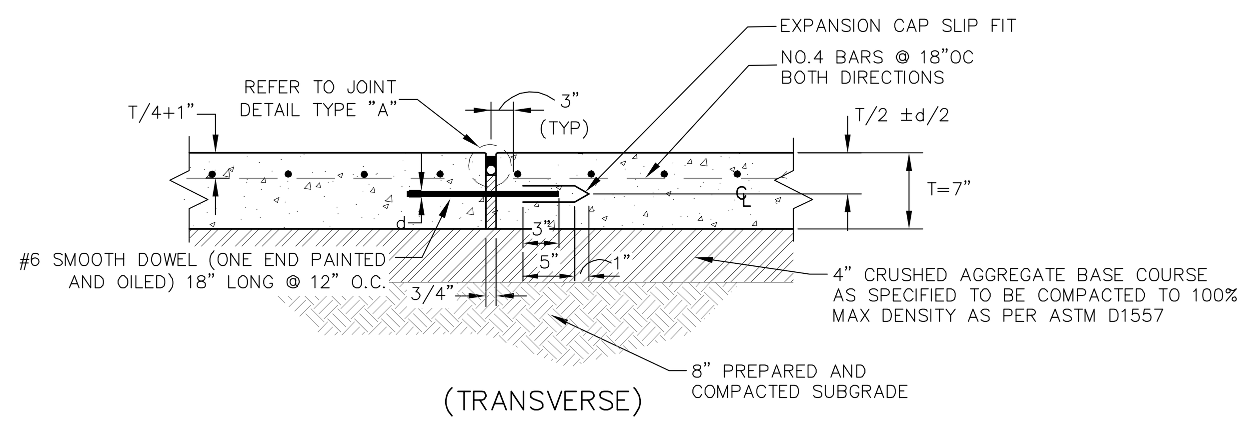

(TRANSVERSE)
EXPANSION JOINTS
SCALE: NTS

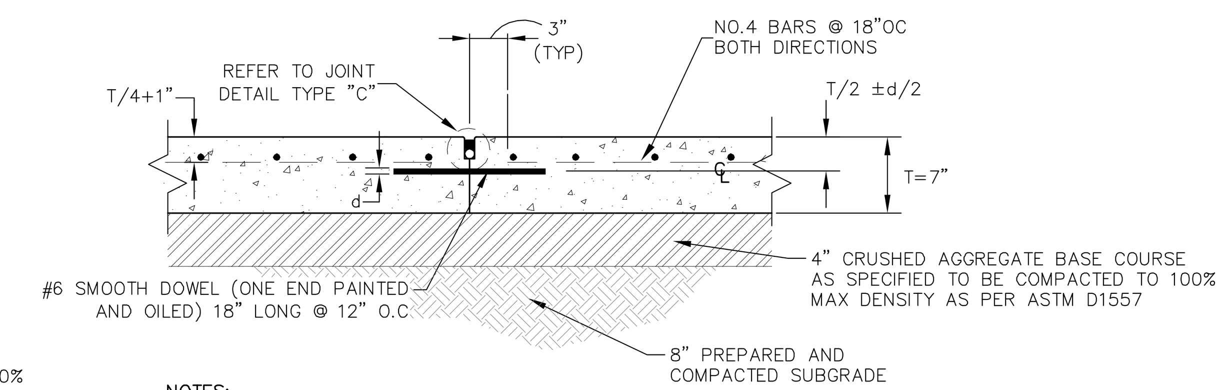

NOTES:
JOINT SHOWN TO BE USED AT A REGULARLY SCHEDULED TRANSVERSE CONSTRUCTION JOINT. FOR A TRANSVERSE CONSTRUCTION JOINT AT A LOCATION OTHER THAN REGULARLY SCHEDULED CONTRACTION JOINT:
1. THE REINFORCING SHALL BE CARRIED THROUGH THE JOINT
2. DOWELS SHALL NOT BE PAINTED OR OILED.

(TRANSVERSE)
CONSTRUCTION JOINTS
SCALE: NTS

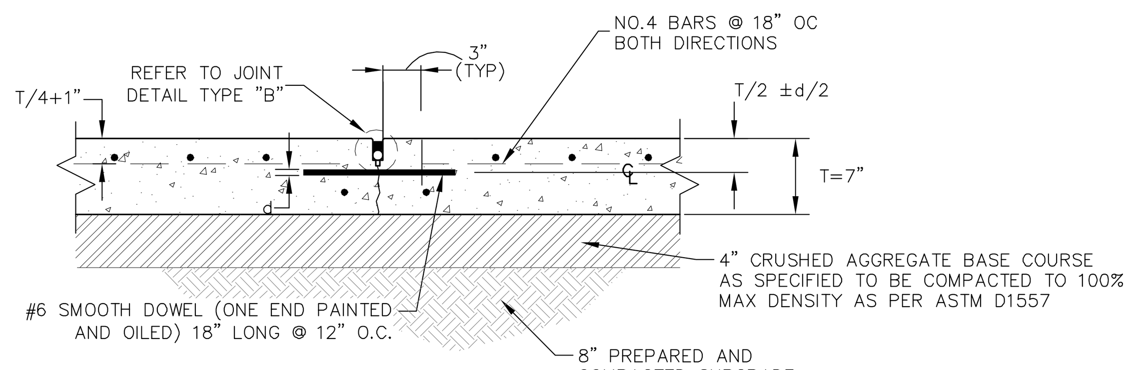

(TRANSVERSE)
CONTRACTION JOINTS
SCALE: NTS

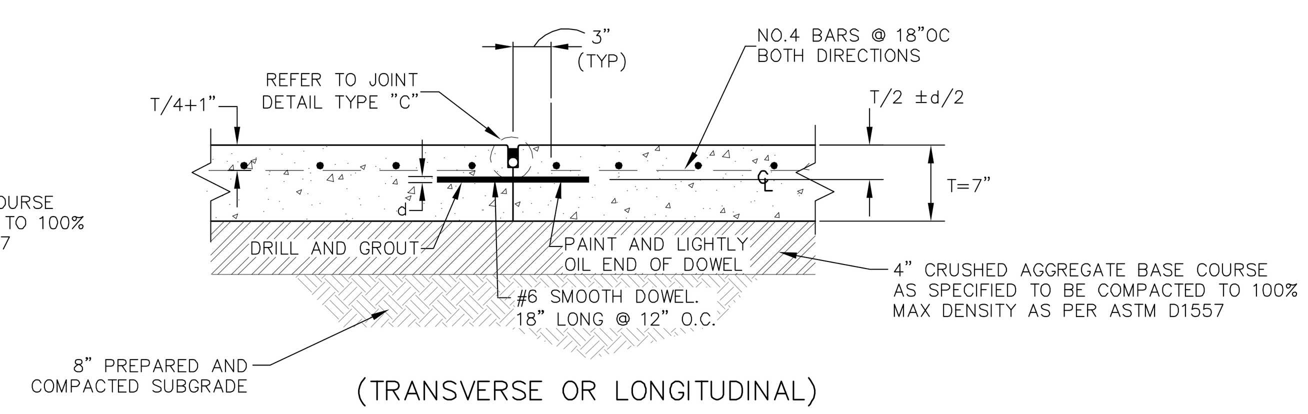

(TRANSVERSE OR LONGITUDINAL)
CONSTRUCTION JOINTS
(CONCRETING INTERRUPTED)
SCALE: NTS

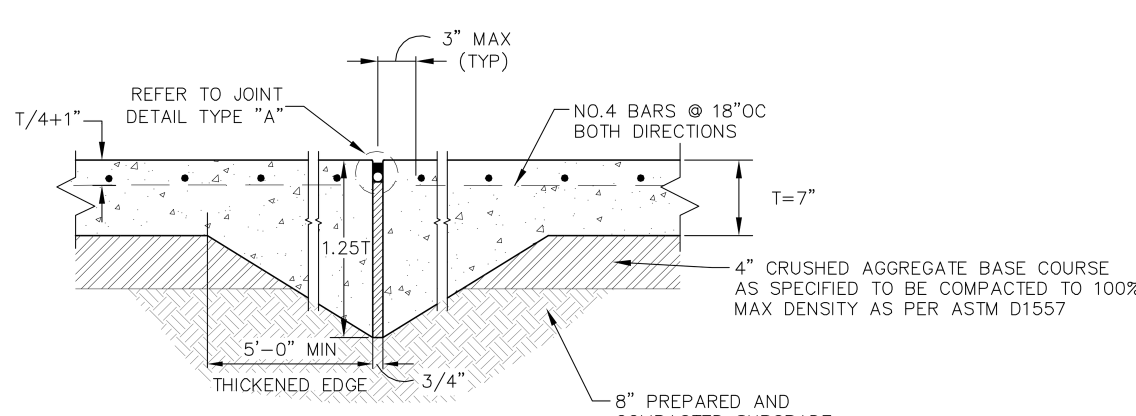

(THICKENED EDGE)
EXPANSION JOINTS
SCALE: NTS

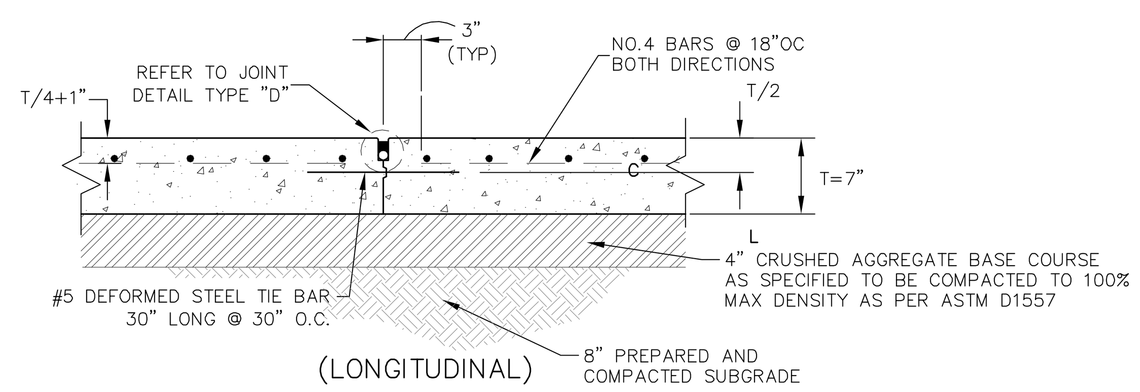

(LONGITUDINAL)
CONSTRUCTION JOINTS
SCALE: NTS

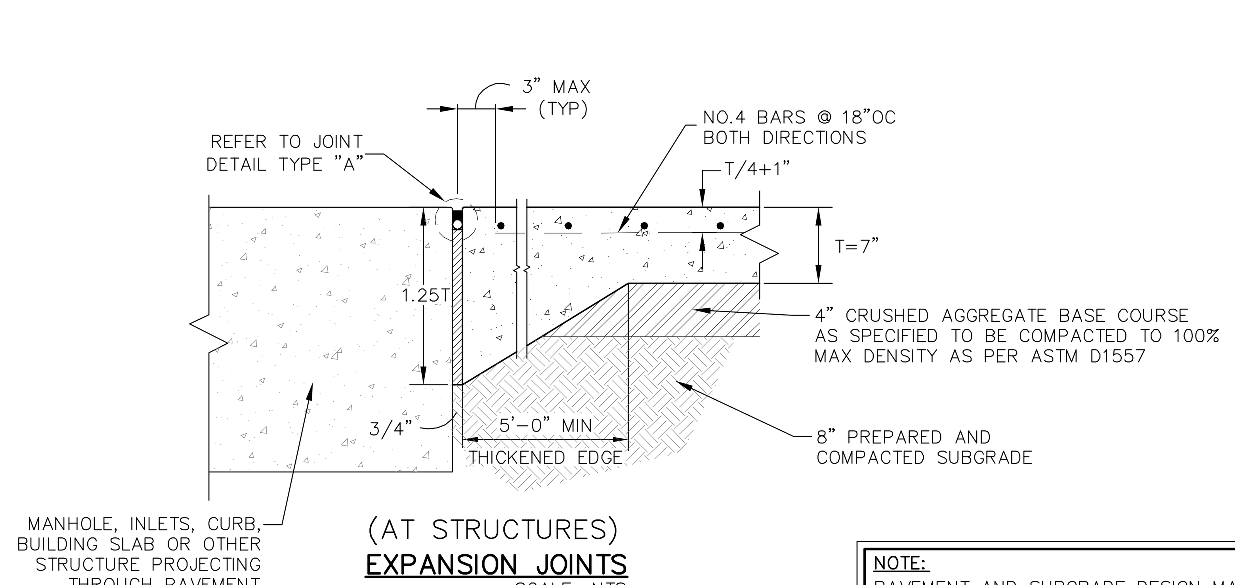

(AT STRUCTURES)
EXPANSION JOINTS
SCALE: NTS

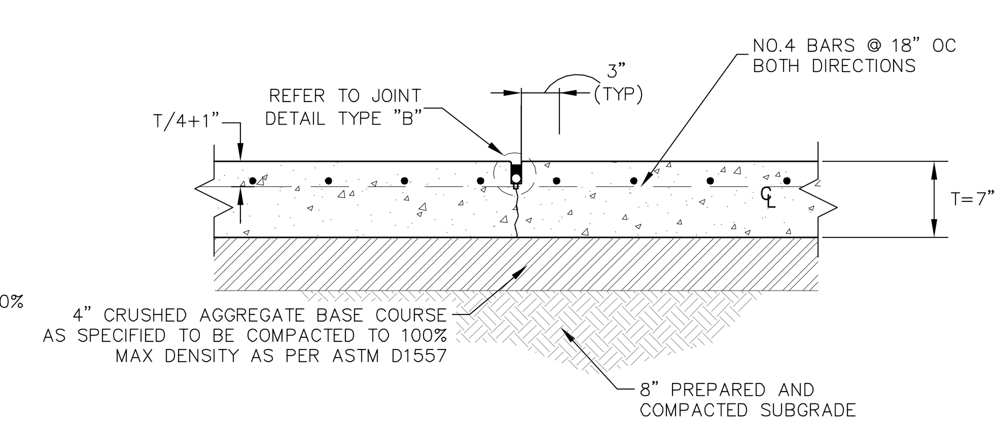

(LONGITUDINAL)
CONTRACTION JOINTS
SCALE: NTS

NOTE:
PAVEMENT AND SUBGRADE DESIGN MAY CHANGE PENDING GEOTECHNICAL DESIGN/RECOMMENDATIONS.

① REINFORCED CONCRETE PAVEMENT DETAILS & SECTIONS
SCALE: N.T.S.

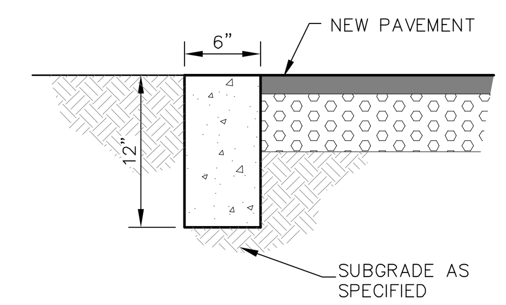

HEADER CURB

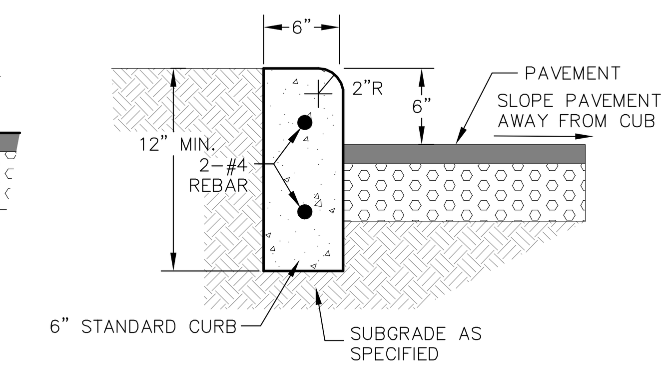

STANDARD CURB

CONCRETE CURB NOTES:
1. CONCRETE TO BE 3000 PSI MIN. @ 28 DAYS.
2. CONCRETE CURB, GUTTER, AND RETURNS SHALL BE ASTM TYPE II, PORTLAND CEMENT.
3. DUMMY JOINT REQUIRED AT 10' O.C. FOR CURB & GUTTER.
4. EXPANSION MATERIAL REQUIRED AT CURB RETURNS, WITH 1/2" PRE-MOLDED BITUMINOUS EXPANSION JOINTS (AASHTO M-33).
5. SUBGRADE UNDER CURB MUST BE FORMED AND COMPACTED TO 95% ASTM D1557.
6. EXPANSION JOINTS REQUIRED AT 50' O.C. WHEN FORMING FOR CURBS.

② CURB DETAILS
SCALE: N.T.S

NOTE:
PAVEMENT AND SUBGRADE DESIGN MAY CHANGE PENDING GEOTECHNICAL DESIGN/RECOMMENDATIONS.

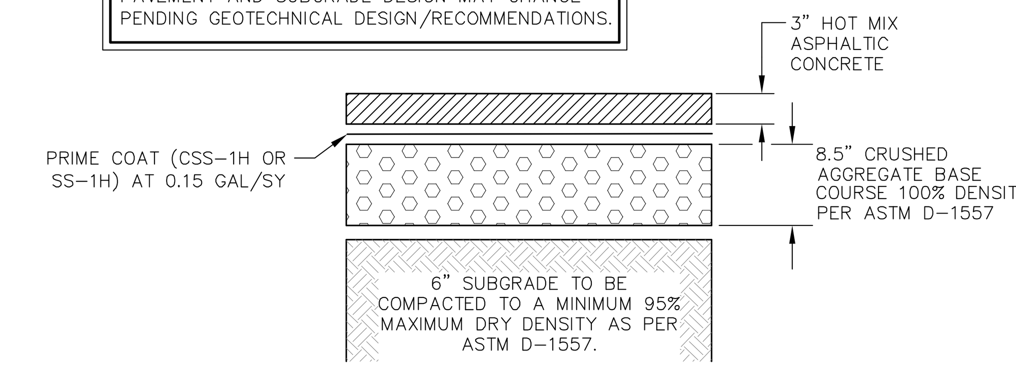

GENERAL NOTES

1. PRIOR TO THE CONSTRUCTION OF THE FLEXIBLE PAVEMENT SECTION, THE EXISTING SUBGRADE SHOULD BE SCARIFIED 8 INCHES, BROUGHT TO WITHIN PLUS OR MINUS 2 PERCENT OF OPTIMUM MOISTURE CONTENT AND COMPACTED TO AT LEAST 95% OF MODIFIED PROCTOR MAXIMUM DRY DENSITY ASTM D1557. THE PAVEMENT AREAS SHOULD THEN BE BROUGHT TO FINAL SUBGRADE ELEVATION WITH PROPERLY COMPACTED STRUCTURAL FILL AS DETERMINED BY DRAINAGE CONSIDERATIONS AND PAVEMENT THICKNESS. STRUCTURAL FILL SHOULD BE NON-EXPANSIVE AND MEET SPECIFICATIONS AS OUTLINED IN THE GEOTECHNICAL REPORT.
2. FOLLOWING THE PROPER TREATMENT OF THE SUBGRADE, A FLEXIBLE PAVEMENT SECTION CONSISTING OF 3" INCHES OF ASPHALTIC CONCRETE OVERLYING 8.5 INCHES OF CRUSHED AGGREGATE BASE COURSE SHOULD BE CONSTRUCTED FOR THE AREAS INDICATED ON THE GRADING PLAN.
3. THE HOT MIX ASPHALTIC CONCRETE SHALL CONFORM TO THE REQUIREMENTS OF TYPE "C" OF ITEM 340 OF THE TEXAS DEPARTMENT OF TRANSPORTATION STANDARD SPECIFICATIONS FOR CONSTRUCTION OF HIGHWAYS, STREETS AND BRIDGES.
4. AGGREGATE BASE COURSE SHALL CONFORM WITH THE REQUIREMENTS OF TYPE A, GRADE 1 OF ITEM 247 OF THE TEXAS DEPARTMENT OF TRANSPORTATION STANDARD SPECIFICATIONS FOR CONSTRUCTION OF HIGHWAYS, STREETS AND BRIDGES.
5. FOR SPECIFICATIONS AND CONSTRUCTION REQUIREMENTS REFER TO GEOTECHNICAL REPORT AND ADDENDUM PREPARED BY PSI, INC.

③ TYPICAL ASPHALT PAVEMENT SECTION (IF NEEDED)
SCALE: N.T.S

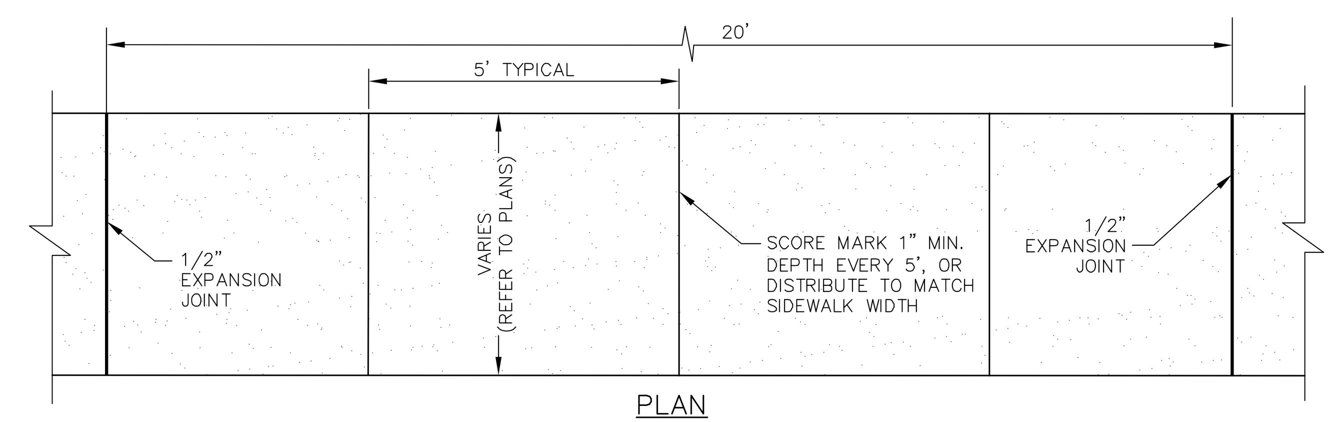

PLAN

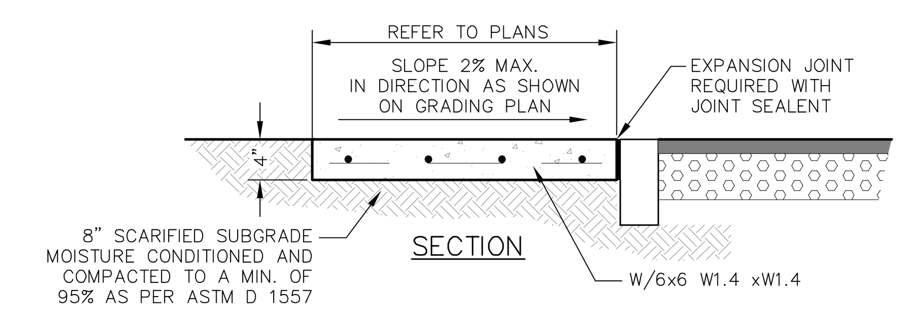

SECTION

SIDEWALK NOTES:
1. CONCRETE SIDEWALK SHALL BE 3,000 P.S.I. @ 28 DAYS.
2. DUMMY JOINTS REQUIRED AT 5' O.C.
3. EXPANSION JOINTS SHALL BE AT 20' O.C. MAXIMUM, USE 1/2" PRE-MOLDED BITUMINOUS EXPANSION JOINTS (AASHTO M-33)
4. EXPANSION JOINT FILLER SHALL BE PLACED WHEREVER SIDEWALK ABUTS ROCK OR MASONRY STRUCTURES SUCH AS CURBS OR BUILDINGS.
5. SUBGRADE TO BE COMPACTED TO 95% ASTM D1557.
6. REINFORCEMENT SHALL INCLUDE 6"X6" #10 W.W.F. ON ALL CONCRETE SIDEWALK
7. WHERE JOINTS IN CONCRETE CONSTRUCTION ARE SHOWN TO BE SEALED, THE JOINT SEALING COMPOUND SHALL BE A TWO-COMPONENT POLYURETHANE SEALANT SPECIFICALLY RECOMMENDED BY THE MANUFACTURER FOR USE ON AIRPORT RUNWAYS AND APRON JOINTS. THE HANDLING PRIOR TO SEALING SHALL BE IN STRICT ACCORDANCE WITH THE RECOMMENDATIONS OF THE MANUFACTURER. JOINT SEALING COMPOUND SHALL BE SIKAFLEX-68TF MIX OR ENGINEER APPROVED EQUIVALENT.

④ 4" THICK TYPICAL CONCRETE SIDEWALK DETAIL
SCALE: N.T.S.

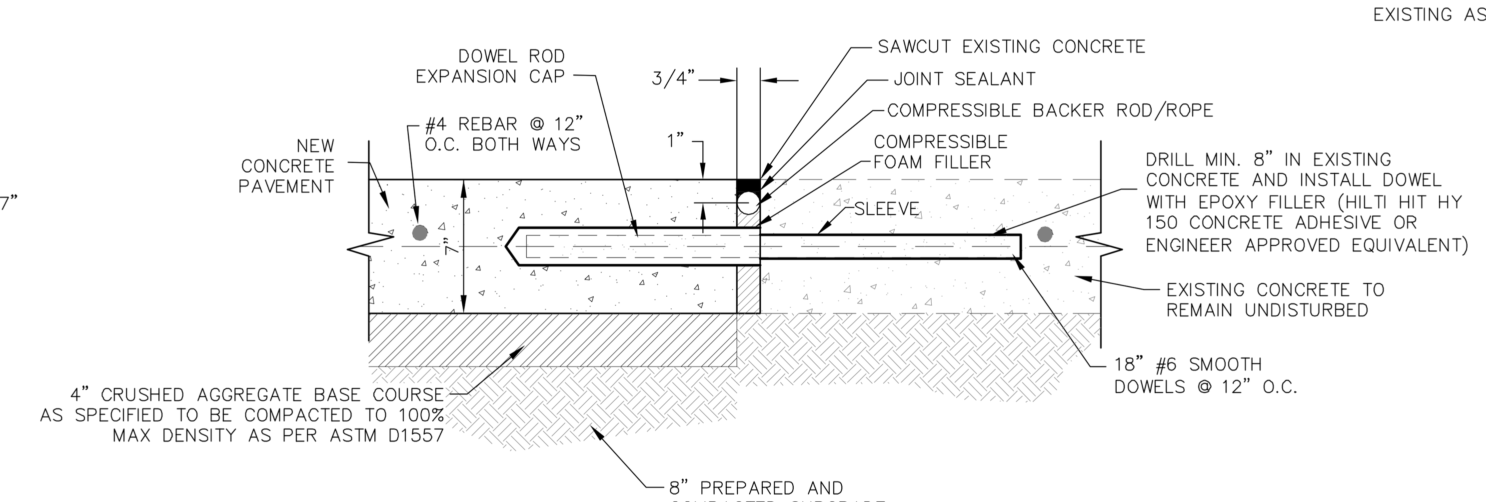

⑤ JUNCTURE OF NEW REINFORCED CONCRETE PAVEMENT TO EXISTING CONCRETE PAVEMENT
SCALE: N.T.S

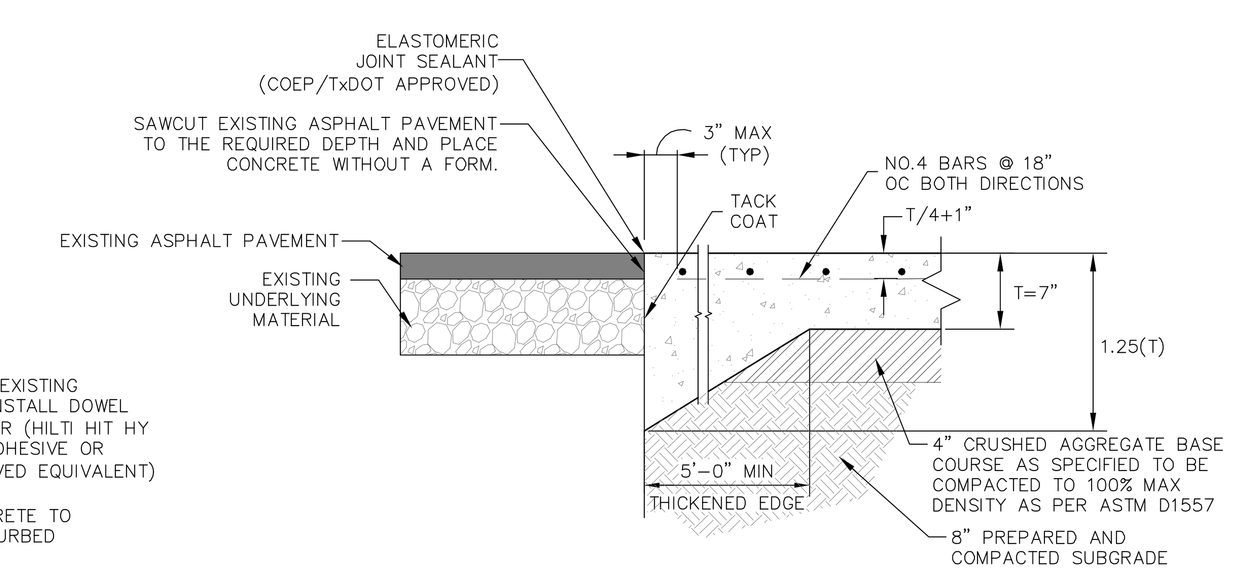

⑥ JUNCTURE OF NEW REINFORCED CONCRETE PAVEMENT TO EXISTING ASPHALT PAVEMENT
SCALE: NTS

QUANTUM engineering consultants incorporated
414 Executive Center Blvd
Ste 200 El Paso TX 79902
P 915.532.7272
F 915.532.7373
Texas Registered Engineering Firm F-005146

The seal appearing on this document was authorized by Robert A. Gonzales, P.E. 69920. Alteration of a sealed document without proper notification to the responsible engineer is an offense under the Texas Engineering Practice Act.

REFERENCES -- BENCHMARK

DATE	REVISIONS	BY

CONSULTANT'S NAME
mijares ● mora ARCHITECTS INC.
111 N. FESTIVAL TEL: 915-542-1591
EL PASO, TEXAS 79912 FAX: 542-1594

ENGINEER'S SEAL
STATE OF TEXAS ROBERT A. GONZALES 69920 REGISTERED PROFESSIONAL ENGINEER 5/27/16

SCALE
DATE MAY 27, 2016
DESIGN BY D.J.F.
DRAWN BY C.A.D.D.
CHKD. BY J.M.R.
APPD. BY R.A.G.
JOB NO. 1431

PROJECT NAME
EL PASO INTERNATIONAL AIRPORT
CHECKED BAGGAGE INSPECTION SYSTEM
6701 CONVAIR RD. EL PASO, TEXAS

CITY OF EL PASO

SHEET TITLE
STANDARD DETAILS
C-6
FILE NO. 238512
SHEET 6 OF 9

May 27,2016 10:44am broj
Q:\Active Drawings\1431 EPIA Baggage Check Addition\Civil\100% CD Final\C6-7 - Details.dwg

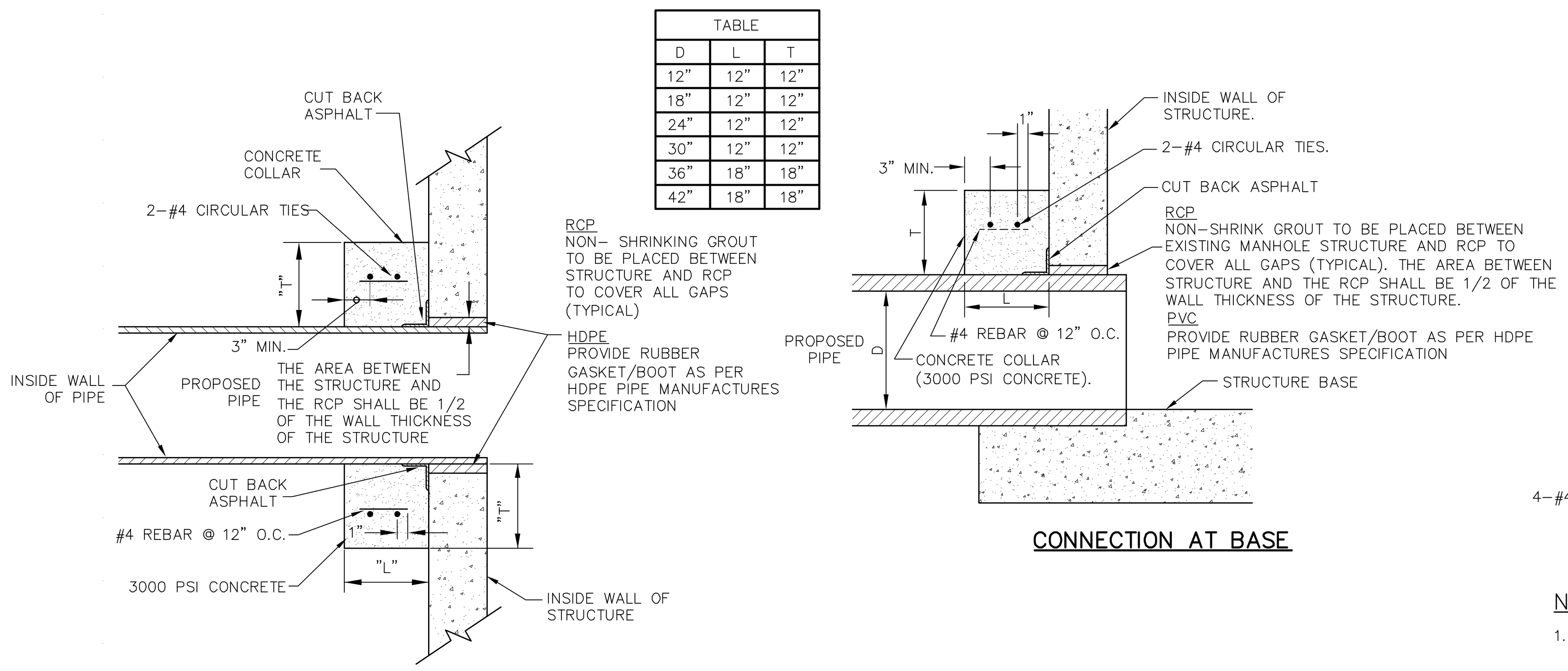

TABLE		
D	L	T
12"	12"	12"
18"	12"	12"
24"	12"	12"
30"	12"	12"
36"	18"	18"
42"	18"	18"

(7) CONNECTION AT JUNCTION BOXES, EXISTING MANHOLES, AND INLETS
SCALE: N.T.S.

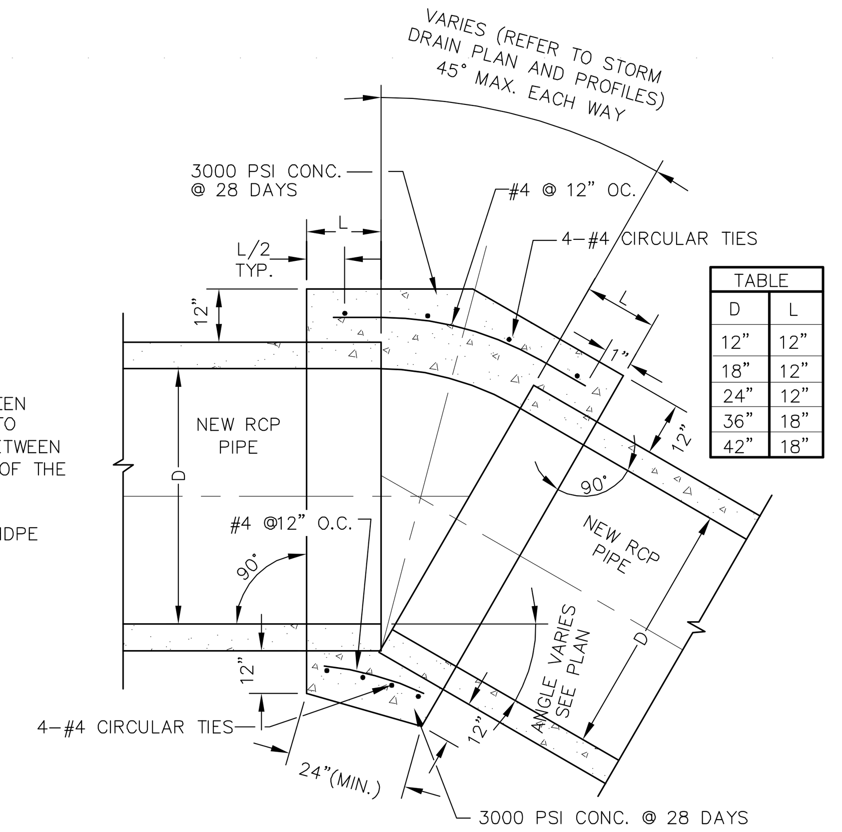

TABLE	
D	L
12"	12"
18"	12"
24"	12"
36"	18"
42"	18"

NOTES:

1. A CONCRETE COLLAR IS REQUIRED WHERE PIPES OF DIFFERENT DIAMETERS OR MATERIALS ARE JOINED, OR WHERE THE CHANGE IN ALIGNMENT OR GRADE EXCEEDS THAT ALLOWED FOR AN ORDINARY JOINT.
2. WHERE PIPES OF DIFFERENT DIAMETERS ARE JOINED WITH A CONCRETE COLLAR, L&T SHOULD BE THOSE OF THE LARGER PIPE, D OR D WHICHEVER IS GREATER.
3. FOR PIPE SIZES NOT LISTED USE NEXT SIZE LARGER.
4. FOR PIPES 24" OR LESS IN DIAMETER REINFORCE WITH W.W.M.
5. THE DIAMETER OF THE CIRCULAR TIES SHALL BE D+(2xWALL THICKNESS)+8".
6. FIELD CLOSURES OF PIPE OF THE SAME DIAMETER AND WITHOUT CHANGE IN GRADE OR ALIGNMENT SHALL BE MADE WITH A CONCRETE COLLAR.

(8) CONCRETE PIPE COLLAR DETAIL
SCALE: N.T.S.

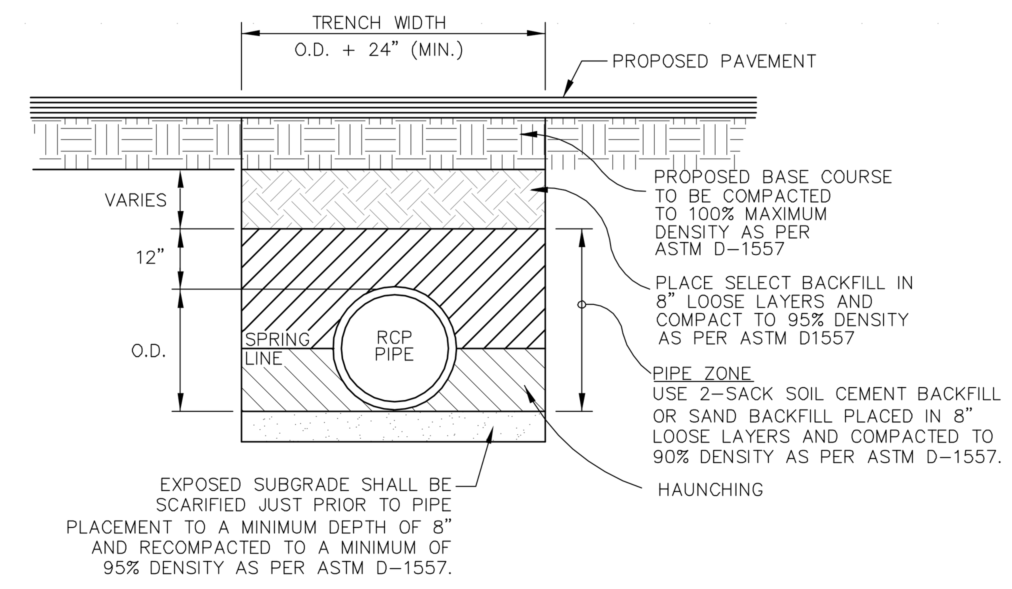

NOTES:

1. PIPE INSTALLATION AND COMPACTION SHALL BE PERFORMED IN ACCORDANCE WITH PIPE MANUFACTURER AND GEOTECHNICAL REQUIREMENTS.
2. RUBBER GASKET SHALL BE USED ON ALL REINFORCED CONCRETE PIPE
3. THE DETAIL SHOWN HEREIN IS STRICTLY FOR REINFORCED CONCRETE PIPE (RCP). CONTRACTOR SHALL FOLLOW A–2000 OR ENGINEER APPROVED EQUIVALENT PIPE MANUFACTURERS INSTALLATION RECOMMENDATIONS

(9) TYPICAL TRENCH BACKFILL DETAIL FOR STORM SEWER (RCP) INSTALLATION
SCALE: NTS

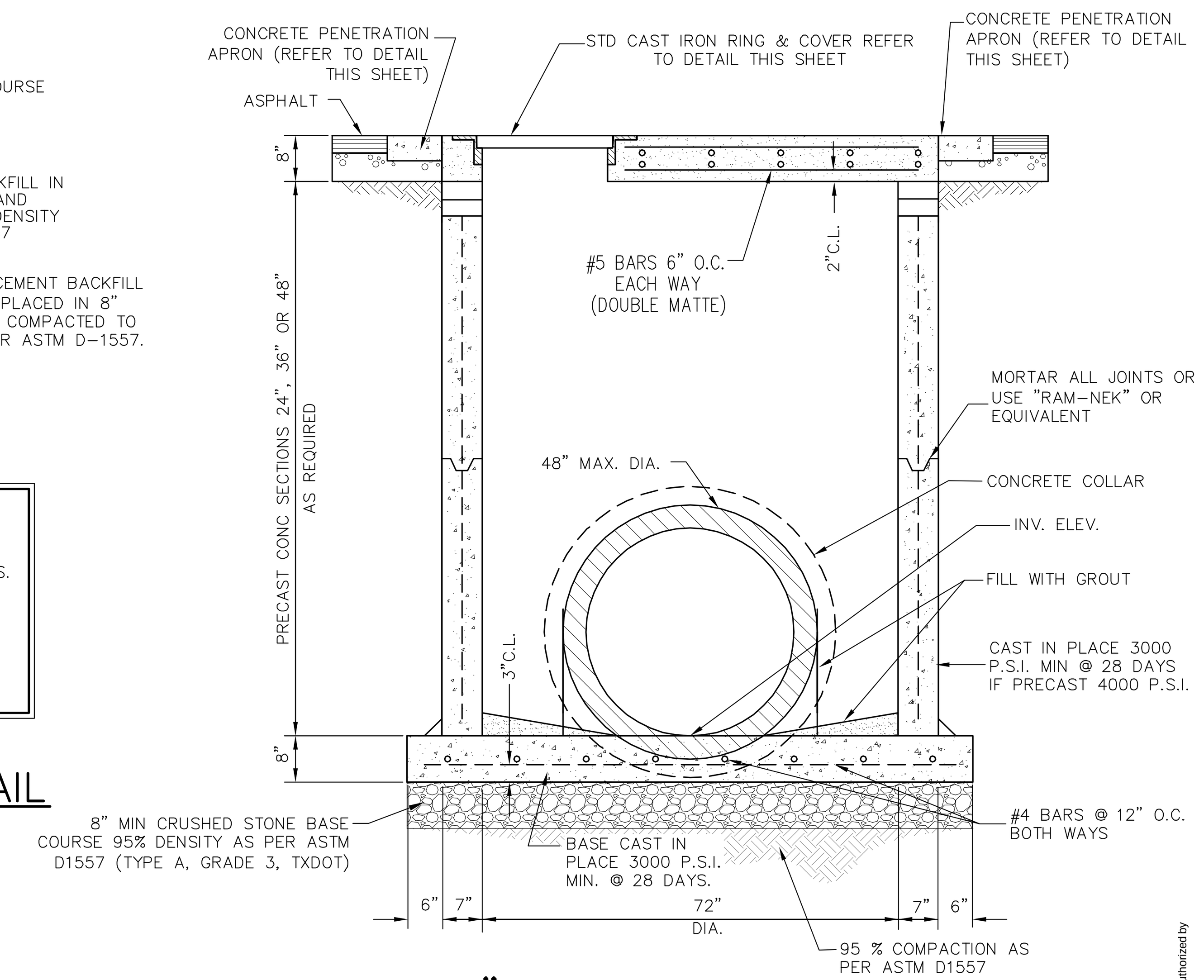

(10) 72" DIAMETER PRECAST MANHOLE SECTIONS
SCALE: NTS

DETAILS ARE SHOWN FOR REFERENCE PURPOSES ONLY. CONTRACTOR TO COORDINATE WITH WESTERN PRECAST.

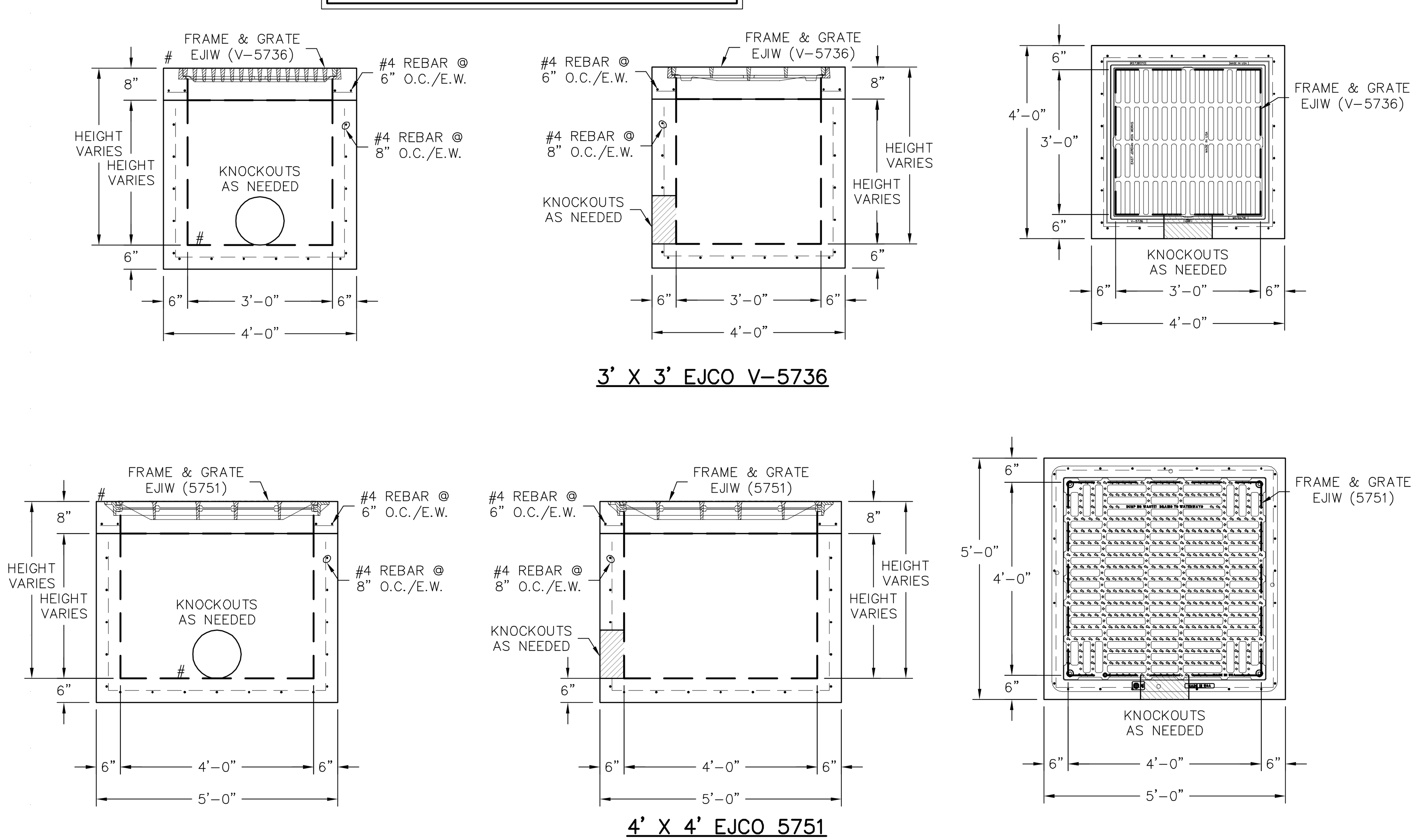

(11) *NEW WESTERN PRECAST CONCRETE SURFACE GRATE INLET
*OR ENGINEER APPROVED EQUIVALENT

SCALE: N.T.S.

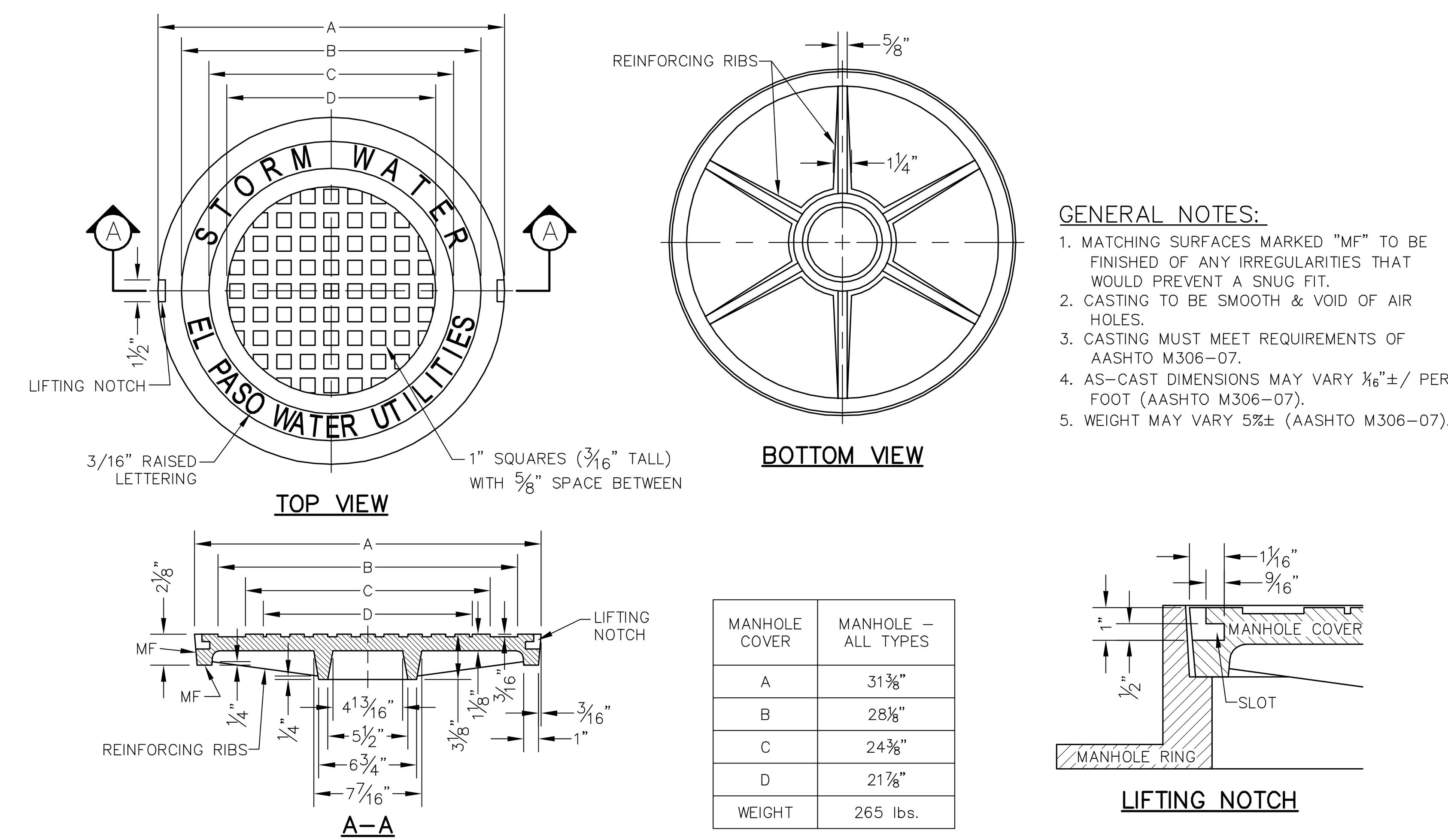

MANHOLE COVER	MANHOLE – ALL TYPES
A	31⅜"
B	28⅛"
C	24⅜"
D	21⅞"
WEIGHT	265 lbs.

GENERAL NOTES:

1. MATCHING SURFACES MARKED "MF" TO BE FINISHED OF ANY IRREGULARITIES THAT WOULD PREVENT A SNUG FIT.
2. CASTING TO BE SMOOTH & VOID OF AIR HOLES.
3. CASTING MUST MEET REQUIREMENTS OF AASHTO M306–07.
4. AS–CAST DIMENSIONS MAY VARY 1/16"±/ PER FOOT (AASHTO M306–07).
5. WEIGHT MAY VARY 5%± (AASHTO M306–07).

(12) STORMWATER MANHOLE COVER
SCALE: N.T.S.

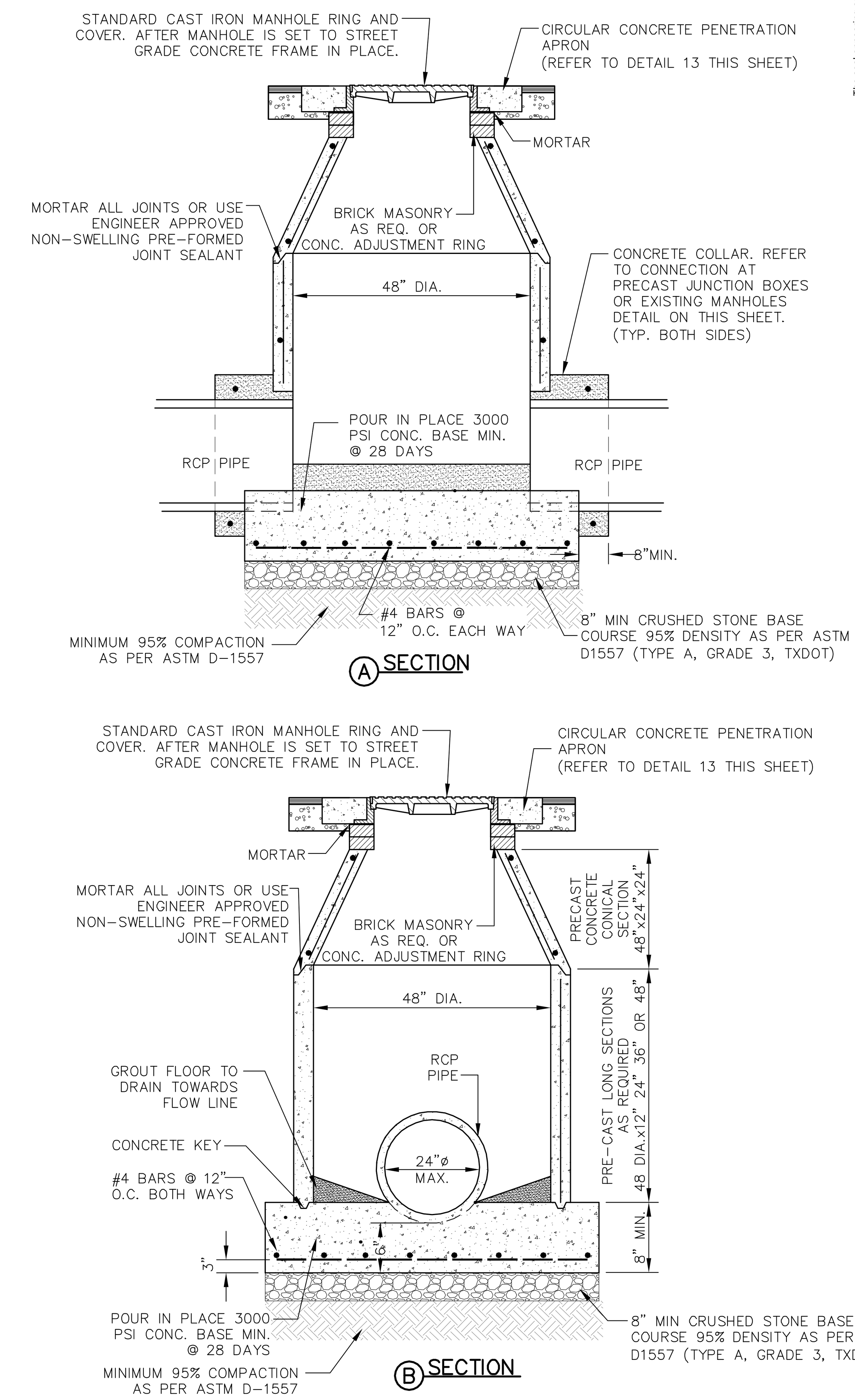

(15) 48" STANDARD MANHOLE
SCALE: NTS

CONCRETE APRON FOR CIRCULAR PENETRATIONS IN ASPHALT PAVEMENTS				
"D" DIAMETER OF PENETRATION (INCHES)	"A" CONCRETE HORIZONTAL DIMENSION FROM PENETRATION (INCHES)	NUMBER OF NO. 3 REINFORCING STEEL BARS	"B" MINIMUM CLEARANCE FROM EDGE OF CONCRETE APRON TO CENTER OF NEAREST REBAR (INCHES)	"C" MINIMUM CLEARANCE FROM PENETRATION EDGE TO CENTER OF NEAREST REBAR (INCHES)
0 TO 6.00	6	1	1½	1½
6.01 TO 18.00	8	2	1½	1½
18.01 AND OVER	12	3	1½	1½

CONSTRUCTION NOTES:

1. ANY DISTURBED SUBGRADE UNDER THE CONCRETE APRON SHALL BE COMPACTED TO 95% DENSITY ± 3% OPTIMUM MOISTURE CONTENT IN ACCORDANCE WITH ASTM D–1557.
2. ANY DISTURBED COARSE UNDER THE CONCRETE APRON SHALL BE COMPACTED TO 100% DENSITY ± 2% OPTIMUM MOISTURE CONTENT IN ACCORDANCE WITH ASTM D–1557.
3. PROVIDE A MINIMUM OF 1 1/2" OF CONCRETE COVER FOR ALL REINFORCEMENT STEEL.
4. REINFORCING SHALL MEET ASTM C–478 AND TRAFFIC LOADING (HS–20).
5. NO. 3 REINFORCING STEEL HOOPS SHALL BE SPACED EQUALLY.

GENERAL NOTES:

1. THE PENETRATION APRON SHOULD BE CAST IN–PLACE CONCRETE. (MINIMUM 28 DAY COMPRESSIVE STRENGTH 4000 PSI. HIGH EARLY CONCRETE IS REQUIRED)
2. TOPS OF PENETRATION APRON SHALL BE FLUSH WITH ROADWAY SURFACE OR FINISHED GRADE UNLESS OTHERWISE SPECIFIED BY THE ENGINEER.

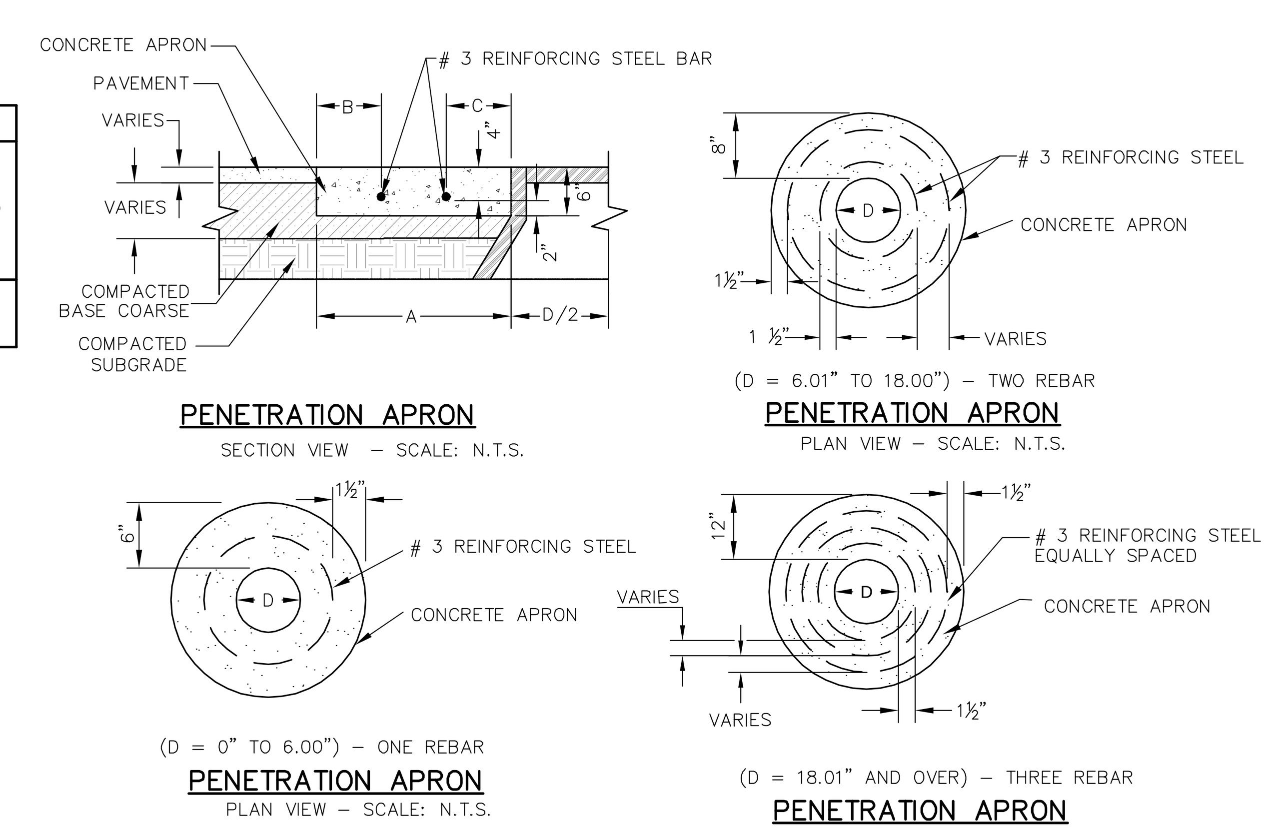

(13) PENETRATION APRON (IF NEEDED)
SCALE: N.T.S.

CEMENT STABILIZED BACKFILL NOTE:

1. WHERE CEMENT STABILIZED BACKFILL IS SHOWN ON THE PROJECT DOCUMENTS, IT SHALL CONSIST OF A MIXTURE OF SOIL AND TWO SACKS OF TYPE I PORTLAND CEMENT PER CUBIC YARD. SOIL SHALL BE CLASSIFIED AS SW, SP, OR SM BY THE UNIFIED SOIL CLASSIFICATION SYSTEM (USCS) OF ASTM D2487, FREE FROM LUMPS, CLODS OR ORGANIC MATERIAL. IF EXCAVATED MATERIAL IS NOT SUITABLE, PIT–RUN SAND SHALL BE USED. CEMENT STABILIZED BACKFILL SHALL BE MIXED IN A CONCRETE MIXER OR TRANSIT MIXER.

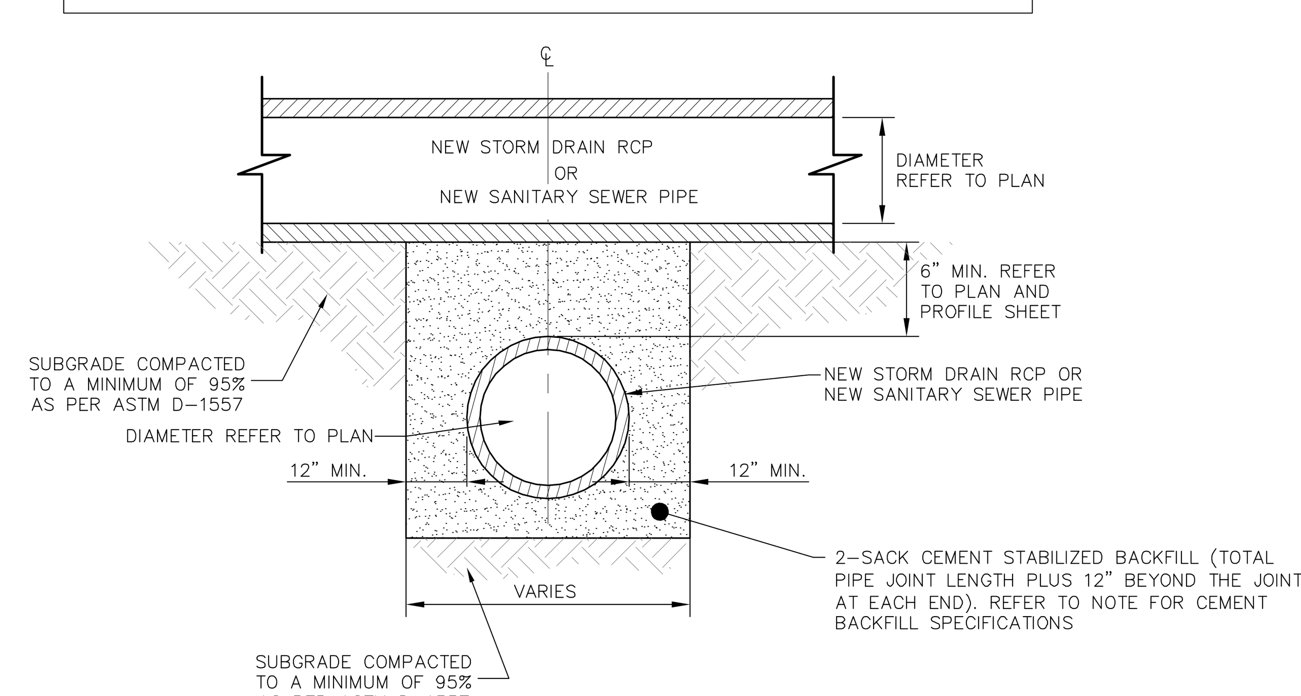

(14) TYPICAL LINE CROSSING DETAIL
SCALE: N.T.S

May 27,2016 10:43am broj
Q:\Active Drawings\1431 EPIA Baggage Check Addition\Civil\100% CD Final\C6-7 - Details.dwg

QUANTUM engineering consultants incorporated
414 Executive Center Blvd
Ste 200 El Paso TX 79902
P 915.532.7272
F 915.532.7373
Texas Registered Engineering Firm F-005146

REFERENCES -- BENCHMARK

REVISIONS	DATE	BY

CONSULTANT'S NAME: mijares mora ARCHITECTS INC. 111 N. FESTIVAL TEL: 915-542-1591 EL PASO, TEXAS 79912 FAX: 542-1594

ENGINEER'S SEAL: STATE OF TEXAS, ROBERT A. GONZALES, 69920, REGISTERED PROFESSIONAL ENGINEER 5/27/16

The seal appearing on this document was authorized by Robert A. Gonzales, P.E. 69920. Alteration of a sealed document without proper notification to the responsible engineer is an offense under the Texas Engineering Practice Act.

SCALE

DATE MAY 27, 2016
DESIGN BY D.J.F.
DRAWN BY C.A.D.D.
CHKD. BY J.M.R.
APPD. BY R.A.G.
JOB NO. 1431

PROJECT NAME: EL PASO INTERNATIONAL AIRPORT CHECKED BAGGAGE INSPECTION SYSTEM
6701 CONVAIR RD. EL PASO, TEXAS

CITY OF EL PASO

SHEET TITLE

DRAINAGE DETAILS

C-7

FILE NO. 238512

SHEET 7 OF 9

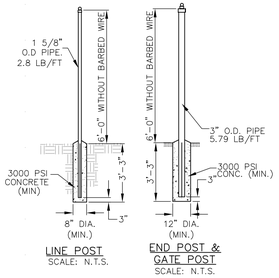

LINE POST
SCALE: N.T.S.

END POST & GATE POST
SCALE: N.T.S.

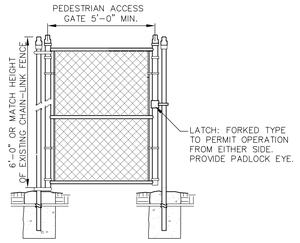

5' PEDESTRIAN ACCESS GATE
SCALE: N.T.S.

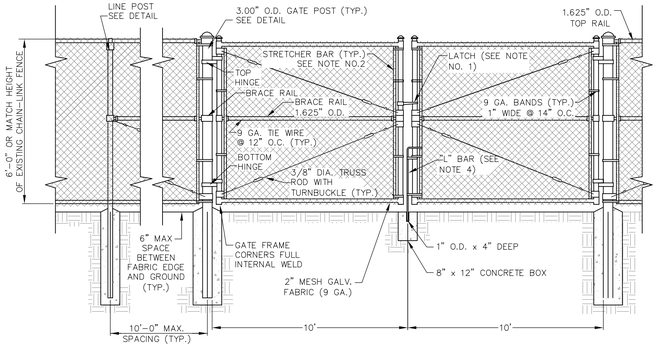

NOTES:
1. ALL NEW PIPE SHALL BE SCHEDULE 40 GALVANIZED.

NOTES:
1. LATCH: FORKED TYPE TO PERMIT OPERATION FROM EITHER SIDE PROVIDE PADLOCK EYE. OWNER TO PROVIDE PADLOCK FOR GATE.
2. STRETCHER BAR: CROSS SECTION 3/16" x 3/4", ONE PIECE LENGTHS, THREADED THROUGH FULL HEIGHT OF FABRIC. PROVIDE ONE BAR FOR EACH GATE AND EACH END POST, AND TWO FOR CORNERS.
3. ALL CONCRETE TO BE 3000 PSI CONCRETE (MIN. AT 28 DAYS).
4. "L" BAR: #5 SMOOTH BAR TO BE PLACED AS LOCKING PIECE TO KEEP GATE FROM SWINGING WHEN LOCKED.
5. TOPS OF ALL CONCRETE FOOTINGS SHALL BE 2 INCHES ABOVE FINISHED GRADE AND SLOPED FOR WATER RUNOFF.
6. STRAIGHT RUNS BETWEEN BRACED POSTS SHALL NOT EXCEED 500 FEET.
7. ALL NEW PIPE SHALL BE SCHEDULE 40 GALVANIZED.
8. FENCES WITH HEIGHTS OVER 6'-0" SHALL REQUIRE ADDITIONAL BRACE BENDS AND TRUSS RODS WITH TRUSS TIGHTER TO SUPPORT THE WEIGHT LOADS.
9. SELVAGE OF FABRIC KNUCKLED AT THE TOP AND KNUCKLED AT BOTTOM.

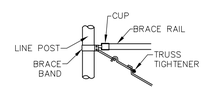

BRACE & TRUSS CONNECTION
SCALE: N.T.S.

① *20' VEHICULAR GATE FENCE, AND ACESS GATE DETAIL

SCALE: N.T.S.

*COORDINATE LOCATION AND REQUIREMENTS WITH E.P.I.A. FOR SECURITY REQUIREMENTS, FOR THE TEMPORARY BAG MAKE UP AREA FOR THE WEST END PHASE I PORTION OF THE PROJECT

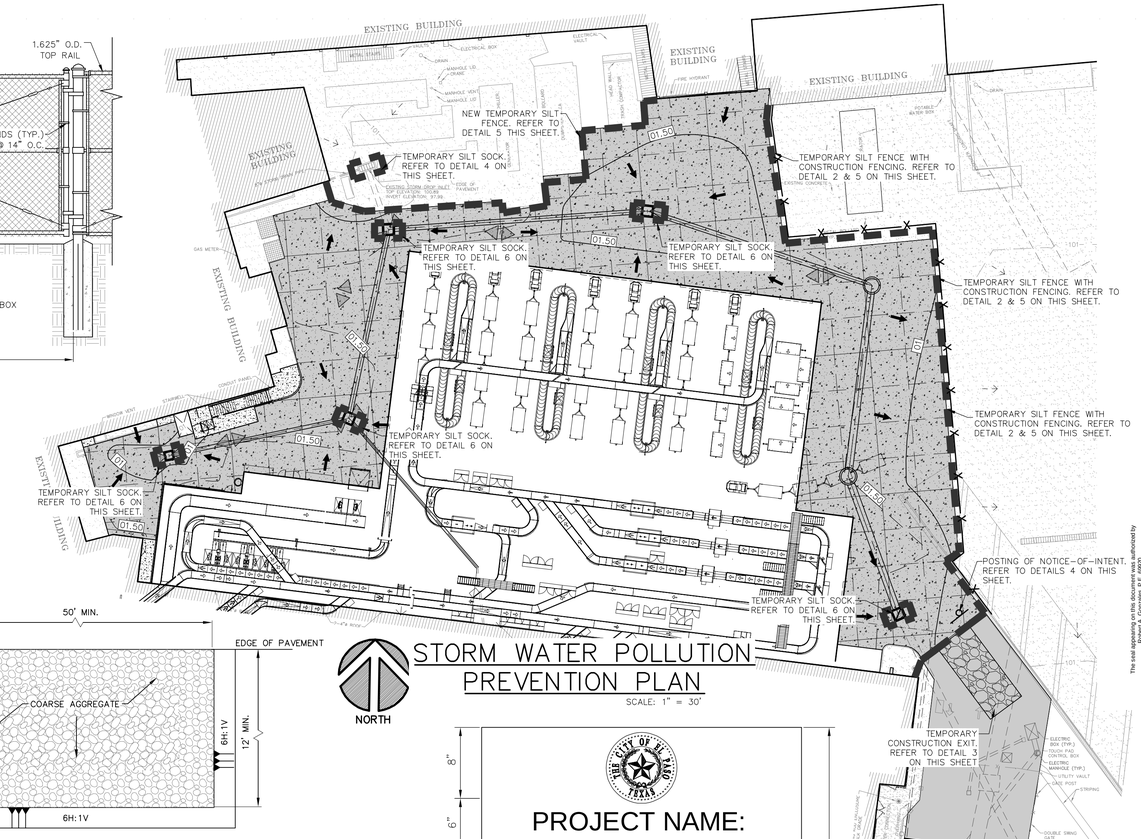

STORM WATER POLLUTION PREVENTION PLAN

SCALE: 1" = 30'

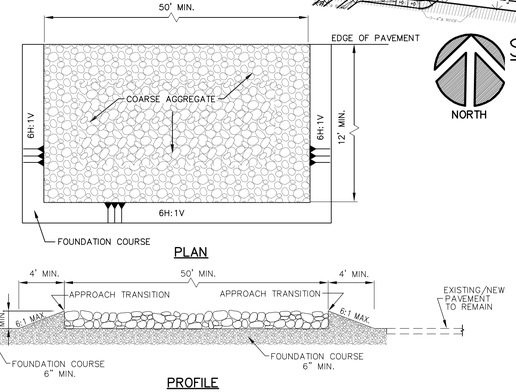

GENERAL NOTES:
1. THE LENGTH OF THE TYPE 1 CONSTRUCTION EXIT SHALL BE AS INDICATED ON THE PLANS, BUT NOT LESS THAN 50'
2. THE COARSE AGGREGATE SHALL BE OPEN GRADED WITH A SIZE OF 3" TO 8". GRADATION MUST PERMIT INTERLOCKING OF AGGREGATE MATERIAL.
3. THE APPROACH TRANSITIONS SHOULD BE NO STEEPER THAN 6:1 AND CONSTRUCTED AS DIRECTED BY THE ENGINEER.
4. THE CONSTRUCTION EXIT FOUNDATION COURSE SHALL BE FLEXIBLE BASE OR OTHER MATERIAL AS APPROVED BY THE ENGINEER.
5. THE CONSTRUCTION EXIT SHALL BE GRADED TO ALLOW DRAINAGE TO A SEDIMENT TRAPPING DEVICE.
6. AT INTERSECTIONS THE CONSTRUCTION EXIT SHALL PROVIDE A 5' WIDE PEDESTRIAN STRIP.

③ CONSTRUCTION EXIT

SCALE: N.T.S.

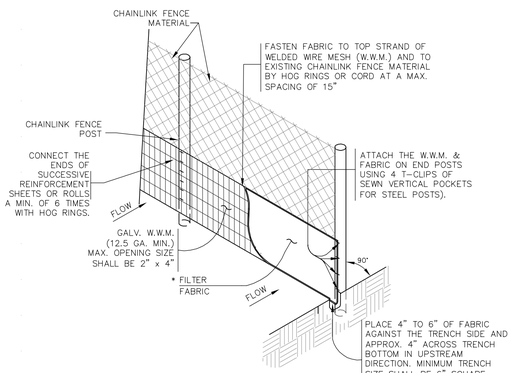

② CONSTRUCTION FENCE OPTION

SCALE: NTS

NOTES:
1. PLACEMENT OF SILT FENCE SHALL BE COORDINATED WITH THE CONTRACTOR'S CONSTRUCTION SEQUENCING PLAN. SILT FENCE SHALL BE ADJUSTED AS NECESSARY TO PREVENT THE BLOCKING OF DRIVES, ROADWAYS, WALKWAYS, PATHS, ETC.
2. CONTRACTOR SHALL WATER CONSTRUCTION SITE AREA AND STAGING AREA A MINIMUM OF TWICE A DAY TO KEEP DUST TO A MINIMUM – ONCE IN THE MORNING AND ONCE IN THE AFTERNOON – THIS SHALL BE DONE ON WEEKENDS AND HOLIDAYS.
3. CONTRACTOR SHALL CONFIRM LOCATION OF PROPOSED CONSTRUCTION EXIT WITH CITY OF EL PASO, EPDOT (EL PASO DEPARTMENT OF TRANSPORTATION) AND/OR PROJECT ENGINEER FOR FINAL LOCATION OF CONSTRUCTION EGRESS/INGRESS. IF THE LOCATION IS DIFFERENT FROM WHAT IS SHOWN ON THIS PLAN, THE SWPPP SHALL BE MODIFIED ACCORDINGLY.
4. CONTRACTOR SHALL MAKE ALL NECESSARY ADJUSTMENTS TO THE STORMWATER POLLUTION CONTROLS FOR EACH PHASE OF CONSTRUCTION. THE CONTRACTOR SHALL COORDINATE ALL ADJUSTMENTS WITH THE DESIGN ENGINEER AND EPDOT PRIOR TO IMPLEMENTATION.
5. THE CONTRACTOR SHALL COMPLETE AND SUBMIT ALL REGULATORY FORMS AND APPLICATIONS, AS PROVIDED IN THE SW3P REQUIREMENTS OF TCEQ AND/OR THE CITY OF EL PASO, INCLUDING, BUT NOT LIMITED TO, NOI, NOT, SDPCP, AND ANY OTHER FORM REQUIRED BY THE CITY, TXDOT OR TCEQ.
6. THE CONTRACTOR SHALL MAINTAIN ADA ACCESSIBLE PARKING, ROUTES AND PEDESTRIAN ACCESS TO THE EXISTING WALKWAYS AT ALL TIMES AND SHALL PROVIDE PROTECTION FOR PEDESTRIAN AND VEHICULAR TRAFFIC THROUGHOUT THE DURATION OF CONSTRUCTION. SHOULD IT BE NECESSARY TO RE-ROUTE PEDESTRIAN AND/OR VEHICULAR TRAFFIC DURING CONSTRUCTION, THE CONTRACTOR SHALL SUBMIT A PEDESTRIAN AND TRAFFIC CONTROL PLAN FOR APPROVAL PRIOR TO INITIATING CONSTRUCTION OPERATIONS. THE CONTRACTOR SHALL MAINTAIN EMERGENCY RESPONSE VEHICULAR ACCESS TO THE ADJACENT ROADWAYS AT ALL TIMES THROUGHOUT THE DURATION OF CONSTRUCTION.

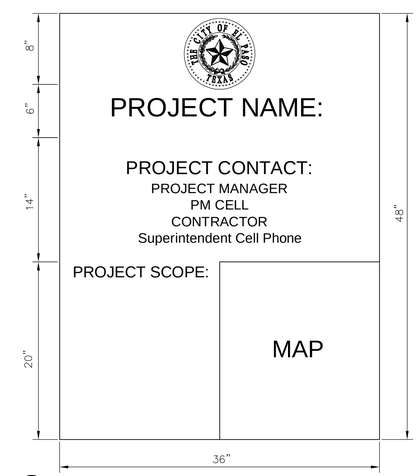

④ NOTICE-OF-INTENT SIGN DETAIL

SCALE: NTS

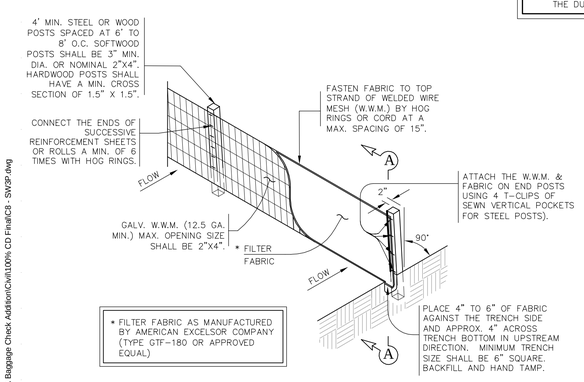

* FILTER FABRIC AS MANUFACTURED BY AMERICAN EXCELSOR COMPANY (TYPE GTF-180 OR APPROVED EQUAL)

⑤ TEMPORARY SEDIMENT CONTROL FENCE

SCALE: NTS

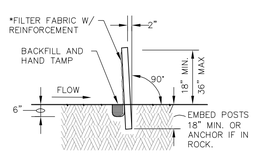

ATTACH THE W.W.M. & FABRIC ON END POSTS USING 4 EVENLY SPACED STAPLES FOR WOODEN POSTS (OR 4 T-CLIPS OR SEWN VERTICAL POCKETS FOR STEEL POSTS).

SEDIMENT CONTROL FENCE USAGE GUIDELINES

A SEDIMENT CONTROL FENCE MAY BE CONSTRUCTED NEAR THE DOWNSTREAM PERIMETER OF A DISTURBED AREA ALONG A CONTOUR TO INTERCEPT SEDIMENT FROM OVERLAND RUNOFF. A 2 YEAR STORM FREQUENCY MAY BE USED TO CALCULATE THE FLOW RATE TO BE FILTERED.
SEDIMENT CONTROL FENCE SHOULD BE SIZED TO FILTER A MAX. FLOW THROUGH RATE OF 0.22 CFS/FT. SEDIMENT CONTROL FENCE IS NOT RECOMMENDED TO CONTROL EROSION FROM A DRAINAGE AREA LARGER THAN 2 ACRES.

A. DESIGN CRITERIA AND MATERIALS PIPE SAND FILLED SOCKS
1. SAND FILLED SOCKS OR "ENGINEER APPROVED EQUAL" WILL BE USED AS A FORM OF SEDIMENT, POLLUTANT AND DEBRIS REMOVAL.
2. SAND FILLED SOCKS OR "ENGINEER APPROVED EQUAL" WILL BE PLACED AT LOCATIONS INDICATED ON THE PROJECT DOCUMENTS OR AS DIRECTED BY THE PROJECT ENGINEER.
3. STANDARD SIZE OF SAND FILLED SOCKS OR "ENGINEER APPROVED EQUAL" FOR NORMAL PROTECTION SHOULD BE 12" DIAMETER. IN SEVERE FLOW SITUATIONS, THE PROJECT ENGINEER MAY RECOMMEND LARGER SOCKS OF 18" OR 24" DIAMETER. THE SOCKS CAN BE STACKED ONE ON TOP OF THE OTHER, IF ADDITIONAL HEIGHT IS REQUIRED.
4. THE SOCKS SHALL BE CONSTRUCTED OF A 3 OR 5 MIL CONTINUOUS, TUBULAR, HDPE 3/8" (9.38 MM) KNITTED MESH NETTING MATERIAL AND FILLED WITH SAND MATERIAL APPROVED BY THE PROJECT ENGINEER.
5. THE SOCKS SHALL EITHER BE MADE ON-SITE OR DELIVERED TO THE JOBSITE.

B. MAINTENANCE
1. IF THE SOCKS BECOME CLOGGED WITH DEBRIS AND SEDIMENT, THEY SHALL BE MAINTAINED SO AS TO ASSURE PROPER DRAINAGE AND WATER FLOW THROUGH THE CHANNEL.
2. THE CONTRACTOR SHALL MAINTAIN SOCKS IN A FUNCTIONAL CONDITION AT ALL TIMES AND IT SHALL BE ROUTINELY INSPECTED.
3. THE CONTRACTOR SHALL REMOVE SEDIMENTS COLLECTED AT THE BASE OF THE SOCKS WHEN THEY REACH 1/3 OF THE EXPOSED HEIGHT OF THE SOCKS, OR AS DIRECTED BY THE PROJECT ENGINEER.
4. IF THE SOCKS REQUIRE REPAIR, DETERIORATES OR FAILS, IT WILL BE REPAIRED OR REPLACED AS NECESSARY.
5. THE SOCKS MAY BE REMOVED OR DISPERSED ONCE THE CONCRETE CHANNEL LINING IS COMPLETE. THE NETTING MATERIAL WILL BE DISPOSED OF IN NORMAL TRASH CONTAINERS OR REMOVED BY THE CONTRACTOR.

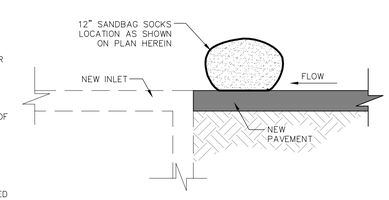

⑥ TYPICAL SILT SOCK DETAIL

SCALE: NTS

LEGEND

3985	EXISTING CONTOURS
XX	FINAL CONTOUR ELEVATION
	NEW DIRECTION OF STORMWATER FLOW
	EXISTING DIRECTION OF STORMWATER FLOW
H.P.	HIGH POINT
L.P.	LOW POINT
	NEW TEMPORARY STABILIZED CONSTRUCTION EXIT. REFER TO DETAIL 3 THIS SHEET.
FF=XXXX.XX	FINISHED FLOOR ELEVATION
	NEW 6.5" THICK REINFORCED CONCRETE PAVEMENT. REFER TO DETAIL 1 ON SHEET C-6.
	NEW HEAT SCARIFICATION AND OVERLAY. REFER TO SPECIFICATIONS FOR ADDITIONAL INFORMATION.
	NEW TEMPORARY SILT SOCK. REFER TO DETAIL 6 THIS SHEET.
	NEW TEMPORARY SILT FENCE. REFER TO DETAIL 5 THIS SHEET.
	LIMITS OF TEMPORARY CONSTRUCTION FENCING. REFER TO DETAIL 2 THIS SHEET.

BENCHMARK:
FOUND PK NAIL WITH SHINER IN PAVEMENT ELEVATION: 101.76 (ASSUMED ELEVATION PROVIDED BY SLI ENGINEERING)

FLOOD ZONE:
ACCORDING TO THE FEDERAL EMERGENCY MANAGEMENT AGENCY FLOOD INSURANCE RATE MAP COMMUNITY PANEL NO 4802140035B, DATED OCTOBER 15, 1982 THIS PROPERTY IS IN FLOOD HAZARD ZONE C.

QUANTUM engineering consultants incorporated
414 Executive Center Blvd
Ste 200 El Paso TX 79902
P 915.532.7272
F 915.532.7373
Texas Registered Engineering Firm F-005146

REFERENCES -- BENCHMARK

DATE	REVISIONS	BY

CONSULTANT'S NAME
mijares ◎ mora
ARCHITECTS INC.
111 N. EST/NA
EL PASO, TEXAS 79912
TEL: 915-542-1991
FAX: 542-1944

ENGINEER'S SEAL
STATE OF TEXAS
ROBERT A. GONZALES
69920
REGISTERED PROFESSIONAL ENGINEER
5/31/16

The seal appearing on this document was authorized by Robert A. Gonzales, P.E. 69920.
Alteration of a sealed document without proper notification to the responsible engineer is an offense under the Texas Engineering Practice Act.

SCALE

DATE	MAY 27, 2016
DESIGN BY	DJF
DRAWN BY	CADD
CHKD. BY	JMR
APPD. BY	RAG
JOB NO.	1431

PROJECT NAME
EL PASO INTERNATIONAL AIRPORT
CHECKED BAGGAGE INSPECTION SYSTEM
6701 CONVAIR RD. EL PASO, TEXAS

CITY OF EL PASO

SHEET TITLE
STORM WATER POLLUTION PREVENTION PLAN

C-8

FILE NO. 238512

SHEET 8 OF 9

May 27,2016 10:53am Inrj
Q:\Active Drawings\1431 EPIA Baggage Check Addition\Civil\100% CD Final\C8 - SW3P.dwg

SITE DESCRIPTION

PROJECT NAME AND LOCATION: EL PASO INTERNATIONAL AIRPORT CHECKED BAGGAGE INSPECTION SYSTEM LOCATED AT 6701 CONVAIR ROAD IN EL PASO, TEXAS, 79925.

PROJECT DESCRIPTION: BUILDING ADDITION (NEW BAGGAGE SCREENING FACILITY) ADJACENT TO AND JUST NORTH OF THE EXISTING AIRLINE TICKET WING AT THE EL PASO INTERNATIONAL AIRPORT. WITH NEW UNDERGROUND UTILITY LINES (STORM DRAIN, WATER, SANITARY SEWER, GAS, TELEPHONE, COMMUNICATION, ETC.)

EXISTING CONDITIONS: THE EXISTING SURFACE IS COVERED BY ASPHALTIC CONCRETE AND CONCRETE PAVING.

MAJOR SOIL DISTURBING ACTIVITIES: CLEARING AND GRUBBING REMOVAL OF EXISTING CONCRETE AND ASPHALTIC PAVEMENT AND GENERAL EXCAVATION FOR THE NEW IMPROVEMENTS.

TOTAL PROJECT AREA: 1.98 ACRES±

TOTAL AREA TO BE DISTURBED: 1.98 ACRES±

WEIGHTED RUNOFF COEFFICIENT (AFTER CONSTRUCTION): 0.95

EXISTING CONDITION OF SOIL AND VEGETATIVE COVER AND % OF EXISTING VEGETATIVE COVER: THE EXISTING SURFACE IS COVERED BY ASPHALTIC CONCRETE AND CONCRETE PAVING.

NAME OF RECEIVING WATERS: STORMWATER RUNOFF FROM THE PROJECT AREA WILL BE DIRECTED TO SEVERAL AREA INLETS THROUGHOUT THE LIMITS OF THE PROJECT. FROM THERE STORMWATER WILL BE CONVEYED VIA EXISTING AND PROPOSED SUBSURFACE DRAINAGE SYSTEMS TO AN EXISTING SYSTEM LOCATED EAST AND SOUTH OF THE PROJECT AREA. THE STORMWATER WILL EVENTUALLY BE DIRECTED TO A REGIONAL RETENTION/DETENTION POND VIA SUBSURFACE SYSTEMS AND/OR OPEN CHANNELS.

OWNER CERTIFICATION

I CERTIFY UNDER PENALTY OF LAW THAT THIS DOCUMENT AND ALL ATTACHMENTS WERE PREPARED UNDER MY DIRECTION OR SUPERVISION IN ACCORDANCE WITH A SYSTEM DESIGNED TO ASSURE THAT QUALIFIED PERSONNEL PROPERLY GATHERED AND EVALUATED THE INFORMATION SUBMITTED. BASED ON MY INQUIRY OF THE PERSON OR PERSONS WHO MANAGE THE SYSTEM, OR THOSE PERSONS DIRECTLY RESPONSIBLE FOR GATHERING THE INFORMATION, THE INFORMATION SUBMITTED IS, TO THE BEST OF MY KNOWLEDGE AND BELIEF, TRUE, ACCURATE, AND COMPLETE. I AM AWARE THAT THERE ARE SIGNIFICANT PENALTIES FOR SUBMITTING FALSE INFORMATION, INCLUDING THE POSSIBILITY OF FINE AND IMPRISONMENT FOR KNOWING VIOLATIONS.

OWNER : SIGNED ______ DATE

OWNER : NAME ______ DATE

TITLE ______ DATE

EROSION AND SEDIMENT CONTROL

SOIL STABILIZATION PRACTICES

- ____ TEMPORARY SEEDING
- ____ PERMANENT PLANTING, SODDING, OR SEEDING
- ____ MULCHING
- ____ SOIL RETENTION BLANKET
- ____ BUFFER ZONES
- ____ PRESERVATION OF NATURAL RESOURCES

OTHER: ______

STRUCTURAL PRACTICES: (T–TEMPORARY; P–PERMANENT)

- T SILT FENCES
- ____ HAY BALES
- ____ ROCK BERMS
- T SANDBAG SOCKS
- ____ DIVERSION, INTERCEPTOR, OR PERIMETER DIKES
- ____ DIVERSION, INTERCEPTOR, OR PERIMETER SWALES
- ____ DIVERSION DIKE AND SWALE COMBINATIONS
- ____ PIPE SLOPE DRAINS
- ____ CONCRETE FLUMES
- ____ ROCK BEDDING AT CONSTRUCTION EXIT
- ____ TIMBER MATTING AT CONSTRUCTION EXIT
- ____ CHANNEL LINERS
- ____ SEDIMENT TRAPS
- ____ SEDIMENT BASINS
- ____ STORM INLET SEDIMENT TRAP
- ____ STONE OUTLET STRUCTURES
- P CURBS AND GUTTERS
- P STORM DRAINS
- ____ VELOCITY CONTROL DEVICES
- ____ VEGETATED SWALES & NATURAL DEPRESSIONS (LANDSCAPE PLANTERS)

OTHER: ______

SEQUENCE OF CONSTRUCTION (STORM WATER MANAGEMENT) ACTIVITIES AND APPROXIMATE DURATIONS:

1. BEGIN CONSTRUCTION – MOBILIZATION (10 DAYS)
2. INSTALL INITIAL STORMWATER POLLUTION PREVENTION (SWPPP) MEASURES AS INDICATED IN THE SWPPP PLAN. (2 DAYS)
3. REMOVAL OF EXISTING CONCRETE AND ASPHALTIC CONCRETE PAVEMENT (7 DAYS)
4. SITE GRADING – CUTTING, FILLING AND COMPACTING (60 DAYS)
5. PERFORM PERIODIC INSPECTIONS OF THE SWPPP STRUCTURES. PERFORM MAINTENANCE OR REPLACEMENTS AS NEEDED. (DURATION OF CONSTRUCTION) (9 MONTHS)
6. EXCAVATION OF SITE (45 DAYS)
7. CONSTRUCTION OF SITE IMPROVEMENTS (9 MONTHS)
8. END CONSTRUCTION – FINAL STABILIZATION, DEMOBILIZATION, REMOVAL OF SWPPP CONTROLS AND SUBMIT NOTICE OF TERMINATION (9 MONTHS)

GENERAL CONTRACTOR CERTIFICATION

I CERTIFY UNDER PENALTY OF LAW THAT I UNDERSTAND THE TERMS AND CONDITIONS OF THE NATIONAL POLLUTANT DISCHARGE ELIMINATION SYSTEM (NPDES) GENERAL PERMIT THAT AUTHORIZES STORM WATER DISCHARGES ASSOCIATED WITH CONSTRUCTION ACTIVITY FROM THE CONSTRUCTION SITE IDENTIFIED AS PART OF THIS CERTIFICATION.

SIGNED: ______ COMPANY: ______

NAME: ______ ADDRESS: ______

TITLE: ______ TELEPHONE: ______

DATE: ______

SUB – CONTRACTOR CERTIFICATION

I CERTIFY UNDER PENALTY OF LAW THAT I WILL COORDINATE, EITHER THROUGH THE GENERAL CONTRACTOR, OWNER, OR DIRECTLY, WITH THE CONTRACTOR(S) AND/OR SUBCONTRACTOR(S) IDENTIFIED IN THE POLLUTION PREVENTION PLAN HAVING RESPONSIBILITY FOR IMPLEMENTING STORM WATER CONTROL MEASURES TO MINIMIZE ANY IMPACT MY ACTIONS MAY HAVE ON THE EFFECTIVENESS OF THESE STORM WATER CONTROLS MEASURES.

SIGNED: ______ SIGNED: ______

NAME: ______ NAME: ______

TITLE: ______ TITLE: ______

COMPANY: ______ COMPANY: ______

ADDRESS: ______ ADDRESS: ______

TELEPHONE: ______ TELEPHONE: ______

DATE: ______ DATE: ______

INSPECTION AND MAINTENANCE REPORT FORM

TO BE COMPLETED EVERY 7 DAYS AND WITHIN 24 HOURS OF A RAINFALL EVENT OF 0.5 INCHES OR MORE

INSPECTOR: ______ DATE: ______

INSPECTOR'S QUALIFICATIONS:

DAYS SINCE LAST RAINFALL: ______

AMOUNT OF LAST RAINFALL: ______ INCHES

STABILIZATION MEASURES

DRAINAGE AREA	DAY SINCE LAST DISTURBANCE	DAY SINCE NEXT DISTURBANCE	STABILIZED YES/NO	STABILIZED WITH	CONDITION
DA–1					
DA–2					
DA–3					
DA–4					

STABILIZATION REQUIRED:

TO BE PERFORMED BY ______ ON OR BEFORE: ______

SEDIMENT BASIN:

DEPTH OF SEDIMENT BASIN	CONDITIONS OF BASIN SIDE SLOPES	ANY EVIDENCE OF OVERTOPPING OF THE EMBANKMENT?	CONDITION OF OUTFALL FROM SEDIMENT BASIN

MAINTENANCE REQUIRED FOR SEDIMENT BASIN:

TO BE PERFORMED BY ______ ON OR BEFORE: ______

OTHER CONTROLS

STABILIZED CONSTRUCTION ENTRANCE:

DOES MUCH SEDIMENT GET TRACKED ONTO ROAD?	IS THE GRAVEL CLEAN OR IS IT FILLED WITH SEDIMENT?	DOES ALL TRAFFIC USE THE STABILIZED ENTRANCE TO LEAVE THE SITE?	IS THE CULVERT BENEATH THE ENTRANCE WORKING?
			NOT APPLICABLE

MAINTENANCE REQUIRED FOR STABILIZED CONSTRUCTION ENTRANCE:

TO BE PERFORMED BY ______ ON OR BEFORE: ______

PERIMETER STRUCTURAL CONTROLS

DATE: ______

SILT FENCE AND STRAW BAILS

DRAINAGE AREA PERIMETER	HAS SLIT REACHED 1/3 OF FENCE HEIGHT?	IS FENCE PROPERLY SECURED?	IS THERE EVIDENCE OF WASHOUT OR OVERTOPPING?
DA–1			
DA–2			
DA–3			
DA–4			

MAINTENANCE REQUIRED FOR SLIT FENCE AND STRAW BAILS:

TO BE PERFORMED BY ______ ON OR BEFORE: ______

CHANGES REQUIRED TO THE POLLUTION PLAN:

REASONS FOR CHANGES

I CERTIFY UNDER PENALTY OF LAW THAT THIS DOCUMENT AND ALL ATTACHMENTS WERE PREPARED UNDER MY DIRECTION OR SUPERVISION IN ACCORDANCE WITH A SYSTEM DESIGNED TO ASSURE THAT QUALIFIED PERSONNEL PROPERLY GATHERED AND EVALUATED THE INFORMATION SUBMITTED. BASED ON MY INQUIRY OF THE PERSON OR PERSONS WHO MANAGE THE SYSTEM, OR THOSE PERSONS DIRECTLY RESPONSIBLE FOR GATHERING THE INFORMATION, THE INFORMATION SUBMITTED IS, TO THE BEST OF MY KNOWLEDGE AND BELIEF, TRUE, ACCURATE, AND COMPLETE. I AM AWARE THAT THERE ARE SIGNIFICATION PENALTIES FOR SUBMITTING FALSE INFORMATION, INCLUDING THE POSSIBILITY OF FINE AND IMPRISONMENT FOR KNOWING VIOLATIONS.

SIGNATURE: ______ DATE: ______

BEST MANAGEMENT PRACTICES CONTROLS

I WASTE MATERIALS:

ALL WASTE MATERIALS, INCLUDING CONSTRUCTION DEBRIS, SHALL BE COLLECTED AND STORED IN A SECURELY LIDDED METAL DUMPSTER. NO CONSTRUCTION WASTE MATERIAL SHALL BE BURIED ON SITE. THE TRANSIT DUMPSTER SHALL COMPLY WITH ORDINANCE 18.52.010 (ENCLOSURE & REMOVAL OF WASTE MATERIALS DURING CONSTRUCTION). THE DUMPSTER SHALL BE EMPTIED AS NECESSARY OR AS REQUIRED BY ORDINANCE 9.04 (SOLID WASTE MANAGEMENT) AND THE TRASH SHALL BE HAULED TO A LICENSED LANDFILL.

II HAZARDOUS WASTE:

AT A MINIMUM, ANY PRODUCTS IN THE FOLLOWING CATEGORIES SHALL BE CONSIDERED HAZARDOUS: PAINT, ACIDS FOR CLEANING MASONRY SURFACES, CLEANING SOLVENTS, ASPHALT PRODUCTS, CHEMICAL ADDITIVES FOR SPILL STABILIZATION, CURING COMPOUNDS AND ADDITIVES. IN THE EVENT OF A SPILL WHICH MAY BE HAZARDOUS, THE CONTRACTOR SHALL TAKE IMMEDIATE ACTION AND CONTACT THE FIRE DEPARTMENT AND TEXAS COMMISSION ON ENVIRONMENTAL QUALITY (TCEQ)

III SANITARY WASTE:

ALL SANITARY WASTE SHALL BE COLLECTED FROM THE CONSTRUCTION PORTABLE UNITS AS NECESSARY OR AS REQUIRED, CHAPTER 18.08 (BUILDING CODE), BY A LICENSED SANITARY WASTE MANAGEMENT CONTRACTOR. ALL WASTE MATERIAL SHALL BE THE RESPONSIBILITY OF THE CONTRACTOR.

IV SPILL PREVENTION:

THE FOLLOWING PRACTICES SHALL BE USED TO REDUCE THE RISK OF SPILLS OR OTHER ACCIDENTAL EXPOSURES OF MATERIALS TO STORM WATER RUNOFF.

V GOOD HOUSEKEEPING:

A. STORE ONLY ENOUGH PRODUCTS REQUIRED TO DO THE JOB
B. NEATLY STORE MATERIALS ON–SITE IN AN ORDERLY MANNER
C. KEEP PRODUCTS IN THEIR ORIGINAL CONTAINER
D. DO NOT MIX SUBSTANCES WITH ONE ANOTHER, UNLESS OTHERWISE RECOMMENDED BY THE MANUFACTURER
E. USE ENTIRE CONTENTS OF A PRODUCT BEFORE DISPOSING THE CONTAINER
F. FOLLOW MANUFACTURER'S RECOMMENDATIONS FOR PROPER USE AND DISPOSAL

VI HAZARDOUS PRODUCTS:

PRACTICES USED TO REDUCE RISKS:
A. KEEP PRODUCTS IN THEIR ORIGINAL CONTAINER IF AT ALL POSSIBLE
B. RETAIN ORIGINAL LABELS, PRODUCT INFORMATION AND MATERIAL SAFETY DATA SHEETS (MSDS)
C. DISPOSE SURPLUS PRODUCT IN ACCORDANCE WITH MANUFACTURER'S OR LOCAL & STATE RECOMMENDED METHODS

VII PETROLEUM PRODUCTS:

ALL ON–SITE VEHICLES SHALL BE MONITORED FOR LEAKS AND RECEIVE REGULAR PREVENTIVE MAINTENANCE TO REDUCE THE CHANCE OF LEAKAGE. PETROLEUM PRODUCTS SHALL BE STORED IN TIGHTLY SEALED CONTAINERS WHICH ARE CLEARLY LABELED. ANY ASPHALT SUBSTANCES USED ON–SITE SHALL BE APPLIED ACCORDING TO THE MANUFACTURER'S RECOMMENDATION.

VIII SPILL CONTROL PRACTICES:

A. MANUFACTURER'S RECOMMENDED METHODS FOR SPILL CLEANUP SHALL BE CLEARLY POSTED AND SITE PERSONNEL SHALL BE MADE AWARE OF THE PROCEDURES:
B. MATERIALS AND EQUIPMENT NECESSARY FOR SPILL CLEANUP SHALL BE KEPT IN THE MATERIAL STORAGE AREA ON–SITE:
C. ALL SPILLS SHALL BE CLEANED UP IMMEDIATELY AFTER DISCOVERY
D. SPILL AREA SHALL BE WELL VENTILATED AND APPROPRIATE CLOTHING WILL BE WORN:
E. ANY SPILL SHALL BE REPORTED TO THE APPROPRIATE GOVERNMENTAL AGENCY
F. MEASURES SHALL BE TAKEN TO PREVENT A SPILL FROM REOCCURRING

IX MAINTENANCE AND INSPECTION PROCEDURES:

ALL POLLUTION PREVENTION MEASURES SHALL BE INSPECTED AT LEAST ONCE A MONTH OR WITHIN 24–HOURS PRIOR TO ANTICIPATED STORM EVENT AND FOLLOWING A STORM EVENT OF 0.5 INCHES OR MORE. INSPECTION IN FINAL STABILIZED AREAS OR DURING ARID PERIODS WILL BE CONDUCTED MONTHLY. BEST MANAGEMENT PRACTICES AND POLLUTION CONTROL PROCEDURES SHALL BE INSPECTED FOR ADEQUACY. A REPORT SUMMARIZING THE SCOPE OF INSPECTION SHALL BE DONE & RETAINED ALONG WITH THE STORM DRAINAGE POLLUTION CONTROL PLAN.

X REMARKS:

DISPOSAL AREAS, STOCKPILES, AND HAUL ROADS SHALL BE CONSTRUCTED IN A MANNER THAT WILL MINIMIZE AND CONTROL THE AMOUNT OF SEDIMENT THAT MAY ENTER RECEIVING WATERS. DISPOSAL AREAS SHALL NOT BE LOCATED IN ANY WETLAND, WATERBODY OR STREAMBED. CONSTRUCTION STAGING AREAS AND VEHICLE MAINTENANCE AREAS SHALL BE CONSTRUCTED BY THE CONTRACTOR IN A MANNER TO MINIMIZE THE RUNOFF OF POLLUTANTS. ALL WATERWAYS SHALL BE CLEANED AS SOON AS PRACTICABLE OF TEMPORARY EMBANKMENT, TEMPORARY BRIDGES, MATTING, FALSEWORK, PILING DEBRIS OR OTHER OBSTRUCTIONS PLACED DURING CONSTRUCTION OPERATIONS THAT ARE NOT A PART OF THE FINISHED WORK.

XI BATCH / ASPHALT PLANT:

NO CONCRETE OR ASPHALT MATERIAL WILL BE BATCHED ON–SITE. THESE CONSTRUCTION MATERIALS SHALL BE OBTAINED FROM A SUPPLIER PRODUCING THESE MATERIALS OFF–SITE IN COMPLIANCE WITH ALL FEDERAL REGULATIONS. ROCKWALL MORTAR BATCHED ON–SITE SHALL COMPLY TO THESE STORMWATER POLLUTION PREVENTION MEASURES AND ALL NPDES REQUIREMENTS.

XII LISTED ENDANGERED OR THREATENED SPECIES AND CRITICAL HABITAT:

THE PROJECT SITE IS SITUATED WITHIN A PREVIOUSLY DEVELOPED PROPERTY LOCATED AT THE EL PASO INTERNATIONAL AIRPORT AT 6701 CONVAIR ROAD. EL PASO, TEXAS, 79925. NO KNOWN ENDANGERED OR THREATEN SPECIES AND CRITICAL HABITAT HAVE BEEN FOUND OR DOCUMENTED ON THIS PROPERTY.

XIII HISTORIC IMPACT:

A REVIEW OF AVAILABLE TEXAS HISTORICAL COMMISSION (THC) AND NATIONAL REGISTER OF HISTORIC PLACES (NRHP) INFORMATION INDICATED THAT THERE ARE NO KNOWN SITES ELIGIBLE FOR HISTORIC RECORD LISTING WITHIN THE AREA OF THE PROPOSED PROJECT.

XIV SOURCES OF NON–STORM WATER DISCHARGES:

THE FOLLOWING SUBSTANCES ARE EXPECTED TO BE PRESENT ONSITE DURING CONSTRUCTION:

CONCRETE, FUEL TANKS, LUBRICANTS, DETERGENTS, FERTILIZERS, CLEANING SOLVENTS, PAINTS, CURING COMPOUNDS, ASPHALTIC PRODUCTS, DUMPSTERS AND PORTABLE TOILETS.

DESIGNATED AREAS FOR EQUIPMENT MAINTENANCE, REPAIR AND WASH DOWN (INCLUDING CONCRETE TRUCK WASH–DOWN) SHALL HAVE APPROPRIATE POLLUTANT CONTROLS INCLUDING, BUT NOT LIMITED TO, EARTHEN BERMS, ETC.

XV ALLOWABLE DISCHARGES:

NO PERSON SHALL INTRODUCE OR CAUSE TO BE INTRODUCED INTO THE MUNICIPAL SEPARATE STORM SEWER SYSTEM (MS4) OR WATERS WITHIN THE JURISDICTION OF THE CITY OF EL PASO, ANY DISCHARGE THAT IS NOT COMPOSED ENTIRELY OF STORMWATER. IT IS AN AFFIRMATIVE DEFENSE TO ANY ENFORCEMENT ACTION FOR VIOLATION OF THE AFOREMENTIONED THAT THE DISCHARGE WAS COMPOSED ENTIRELY OF ONE OR MORE OF THE FOLLOWING CATEGORIES OF DISCHARGES:

1. A DISCHARGE RESULTING FROM FIREFIGHTING;
2. AGRICULTURAL STORMWATER RUNOFF;
3. A DISCHARGE FROM LAWN WATERING, LANDSCAPE IRRIGATION, OR OTHER IRRIGATION WATER;
4. A DISCHARGE FROM UNCONTAMINATED PUMPED GROUNDWATER OR RISING GROUNDWATER;
5. UNCONTAMINATED GROUNDWATER INFILTRATION
6. UNCONTAMINATED DISCHARGE FROM A FOUNDATION DRAIN, CRAWL SPACE PUMP, FOOTING DRAIN OR SUMP PUMP;
7. A DISCHARGE FROM WATER USED IN STREET WASHING; PROVIDED, THAT THE WATER IS NOT CONTAMINATED WITH ANY HARMFUL CLEANING SUBSTANCE.

XVI OFFSITE VEHICLE TRACKING:

IN ADDITION TO THE STABILIZED CONSTRUCTION ENTRANCES, THE FOLLOWING MEASURES SHALL BE OBSERVED DURING CONSTRUCTION:

- X HAUL ROADS SHALL BE DAMPENED FOR DUST CONTROL
- X LOADED HAUL TRUCKS SHALL BE COVERED WITH TARPAULIN
- X EXCESS DIRT ON ROAD SHALL BE REMOVED DAILY
- X STABILIZED CONSTRUCTION ENTRANCE

OTHER: ______

XVII ILLEGAL OR PROHIBITED DISCHARGES:

NO PERSON SHALL INTRODUCE OR CAUSE TO BE INTRODUCED INTO THE MS4 ANY DISCHARGE THAT CAUSES OR CONTRIBUTES TO CAUSING THE CITY TO VIOLATE A WATER QUALITY STANDARD, THE CITY'S NPDES PERMIT, OR ANY STATE–ISSUED DISCHARGE PERMIT FOR DISCHARGES FROM ITS MS4. NO PERSON SHALL RELEASE OR CAUSE, ALLOW, OR PERMIT TO BE INTRODUCED ANY OF THE FOLLOWING SUBSTANCES INTO THE MS4 OR THE WATERS WITHIN THE JURISDICTION OF THE CITY SUCH THAT THE SUBSTANCE MAY ENTER THE AIR OR GROUNDWATER:

1. ANY USED MOTOR OIL, ANTIFREEZE, OR ANY OTHER MOTOR VEHICLE FLUID;
2. ANY INDUSTRIAL WASTE;
3. ANY HAZARDOUS WASTE, INCLUDING HAZARDOUS HOUSEHOLD WASTE;
4. ANY DOMESTIC SEWAGE OR SEPTIC TANK WASTE, GREASE TRAP WASTE, OR GRIT TRAP WASTE;
5. ANY WASTEWATER FROM A COMMERCIAL CARWASH FACILITY; FROM ANY COMMERCIAL VEHICLE WASHING, CLEANING, OR MAINTENANCE AT ANY NEW OR USED AUTOMOBILE OR OTHER VEHICLE DEALERSHIP, RENTAL AGENCY, BODY SHOP, REPAIR SHOP, OR MAINTENANCE FACILITY.
6. ANY WASTEWATER FROM A COMMERCIAL MOBILE POWER WASHER OR FROM THE WASHING OR OTHER CLEANING OF BUILDING EXTERIOR WHERE THE WASTEWATER CONTAINS ANY HARMFUL CLEANING SUBSTANCE;
7. ANY WASTEWATER FROM COMMERCIAL FLOOR, RUG, OR CARPET CLEANING;
8. ANY WASTEWATER FROM THE WASHDOWN OR OTHER CLEANING OF PAVEMENT THAT CONTAINS ANY HARMFUL QUANTITY OF ANY CLEANING SUBSTANCE; OR ANY WASTEWATER FROM THE WASHDOWN OR OTHER CLEANING OF ANY PAVEMENT WHERE ANY SPILL, LEAK, OR OTHER RELEASE OF OIL, MOTOR FUEL, OR OTHER PETROLEUM OR HAZARDOUS SUBSTANCE HAS OCCURRED, UNLESS ALL HARMFUL QUANTITIES OF SUCH RELEASED MATERIAL HAVE BEEN PREVIOUSLY REMOVED;
9. ANY EFFLUENT FROM A COOLING TOWER, CONDENSER, COMPRESSOR, EMISSIONS SCRUBBER, EMISSIONS FILTER, OR THE BLOWDOWN FROM A BOILER;
10. ANY READY–MIXED CONCRETE, MORTAR, CERAMIC, OR ASPHALT BASE MATERIAL OR HYDROMULCH MATERIAL, OR FROM THE CLEANING OF COMMERCIAL VEHICLES OR EQUIPMENT CONTAINING, OR USED IN TRANSPORTING OR APPLYING, SUCH MATERIAL;
11. ANY FILTER BACKWASH FROM A SWIMMING POOL, FOUNTAIN, OR SPA;
12. ANY SWIMMING POOL OR SPA WATER;
13. ANY DISCHARGE FROM WATER LINE DISINFECTION BY SUPERCHLORINATION OR OTHER MEANS IF IT CONTAINS ANY HARMFUL QUANTITY OF CHLORINE OR ANY OTHER CHEMICAL USED IN LINE DISINFECTION;
14. ANY WATER FROM A WATER CURTAIN IN A SPRAY ROOM USED FOR PAINTING VEHICLES OR EQUIPMENT;
15. ANY CONTAMINATED RUNOFF FROM A VEHICLE WRECKING YARD;
16. ANY SUBSTANCE OR MATERIAL THAT WILL DAMAGE, BLOCK, OR CLOG THE MS4;
17. ANY RELEASE FROM A PETROLEUM STORAGE TANK (PST), OR ANY LEACHATE OR RUNOFF FROM SOIL CONTAMINATED BY A LEAKING PST, OR ANY DISCHARGE OF PUMPED, CONFINED, OR TREATED WASTEWATER FROM THE REMEDIATION OF ANY SUCH PST RELEASE, UNLESS THE DISCHARGE COMPLIES WITH ALL STATE AND FEDERAL STANDARDS AND REQUIREMENTS.

NO PERSON SHALL INTRODUCE OR CAUSE TO BE INTRODUCED INTO THE MS4 OR WATERS WITHIN THE JURISDICTION OF THE CITY OF EL PASO, ANY HARMFUL QUANTITY OF SEDIMENT, SILT, EARTH, SOIL, OR OTHER MATERIAL ASSOCIATED WITH CLEARING, GRADING, EXCAVATION OR OTHER CONSTRUCTION ACTIVITIES, OR ASSOCIATED WITH LANDFILLING OR OTHER PLACEMENT OR DISPOSAL OF SOIL, ROCK, OR OTHER EARTH MATERIALS, IN EXCESS OF WHAT COULD BE RETAINED ON SITE OR CAPTURED BY EMPLOYING SEDIMENT AND EROSION CONTROL MEASURES TO THE MAXIMUM EXTENT PRACTICABLE UNDER PREVAILING CIRCUMSTANCES.

NO PERSON SHALL CONNECT A LINE CONVEYING SANITARY SEWAGE, DOMESTIC OR INDUSTRIAL, TO THE MS4, OR ALLOW SUCH A CONNECTION TO CONTINUE.

REGULATION OF PESTICIDES, HERBICIDES, AND FERTILIZERS:

1. ANY SALE, DISTRIBUTION, APPLICATION, LABELING, MANUFACTURE, TRANSPORTATION, STORAGE, OR DISPOSAL OF A PESTICIDE, HERBICIDE, OR FERTILIZER MUST COMPLY FULLY WITH ALL STATE AND FEDERAL STATUTES AND REGULATIONS INCLUDING, WITHOUT LIMITATION, THE FEDERAL INSECTICIDE, FUNGICIDE, AND RODENTICIDE ACT (FIFRA) AND ALL FEDERAL REGULATIONS PROMULGATED PURSUANT TO FIFRA; CHAPTERS 63, 75, AND 76 OF THE TEXAS AGRICULTURE CODE AND ALL STATE REGULATIONS PROMULGATED PURSUANT THERETO; AND ANY OTHER STATE OR FEDERAL REQUIREMENT.
2. NO PERSON SHALL USE OR CAUSE TO BE USED ANY PESTICIDE OR HERBICIDE CONTRARY TO ANY DIRECTIONS FOR USE ON ANY LABELING REQUIRED BY STATE OR FEDERAL STATUTE OR REGULATION.
3. NO PERSON SHALL DISPOSE OF, DISCARD, STORE, OR TRANSPORT A PESTICIDE, HERBICIDE, OR FERTILIZER, OR A PESTICIDE, HERBICIDE, OR FERTILIZER CONTAINER, IN A MANNER THAT THE PERSON KNOWS, OR REASONABLY SHOULD KNOW, IS LIKELY TO CAUSE, OR DOES CAUSE, A HARMFUL QUANTITY OF THE PESTICIDE, HERBICIDE, OR FERTILIZER TO ENTER THE MS4 OR WATERS OF THE UNITED STATES.

USED OIL REGULATION: NO PERSON SHALL:

1. DISCHARGE USED OIL INTO THE MS4 OR A SEWER, DRAINAGE SYSTEM, SEPTIC TANK, SURFACE WATER, GROUNDWATER, OR WATERCOURSE;
2. KNOWINGLY MIX OR COMMINGLE USED OIL WITH SOLID WASTE THAT IS TO BE DISPOSED OF IN A LANDFILL OR KNOWINGLY DIRECTLY DISPOSE OF USED OIL ON LAND OR IN ALL LANDFILL OR KNOWINGLY DISCHARGE USED OIL ONTO THE GROUND;
3. INTRODUCE USED OIL INTO THE ENVIRONMENT BY ANY METHOD, INCLUDING APPLICATION OF USED OIL TO A ROAD OR LAND FOR DUST SUPPRESSION, WEED ABATEMENT, OR OTHER SIMILAR USE.

A RETAIL DEALER WHO ANNUALLY SELLS DIRECTLY TO THE PUBLIC MORE THAN FIVE HUNDRED GALLONS OF OIL IN CONTAINERS FOR USE OFF–PREMISES SHALL POST IN A PROMINENT PLACE A SIGN PROVIDED BY THE STATE INFORMING THE PUBLIC THAT IMPROPER DISPOSAL OF USED OIL IS PROHIBITED BY LAW. THE SIGN SHALL PROMINENTLY DISPLAY THE TOLL–FREE TELEPHONE NUMBER OF THE STATE USED OIL INFORMATION CENTER. (ORD. 13477 § 1 (PART), 1998)

QUANTUM engineering consultants incorporated
414 Executive Center Blvd
Ste 200 El Paso TX 79902
P 915.532.7272
F 915.532.7373
Texas Registered Engineering Firm F-005146

CONSULTANT'S NAME: mijares mora ARCHITECTS INC.
111 N. FESTIVAL, EL PASO, TEXAS 79912
TEL: 915-542-1591 FAX: 542-1594

ENGINEER'S SEAL: STATE OF TEXAS, ROBERT A. GONZALES, 69920, REGISTERED PROFESSIONAL ENGINEER, 5/27/16

The seal appearing on this document was authorized by Robert A. Gonzales, P.E. 69920. Alteration of a sealed document without proper notification to the responsible engineer is an offense under the Texas Engineering Practice Act.

REFERENCES -- BENCHMARK

DATE	REVISIONS	BY

SCALE

DATE MAY 27, 2016
DESIGN BY D.J.F.
DRAWN BY C.A.D.D.
CHKD. BY J.M.R.
APPD. BY R.A.G.
JOB NO. 1431

PROJECT NAME: EL PASO INTERNATIONAL AIRPORT CHECKED BAGGAGE INSPECTION SYSTEM
6701 CONVAIR RD. EL PASO, TEXAS

EL PASO INTERNATIONAL AIRPORT

CITY OF EL PASO

SHEET TITLE: STORMWATER POLLUTION PREVENTION SPECIFICATIONS

C-9

FILE NO. 238512

SHEET 9 OF 9

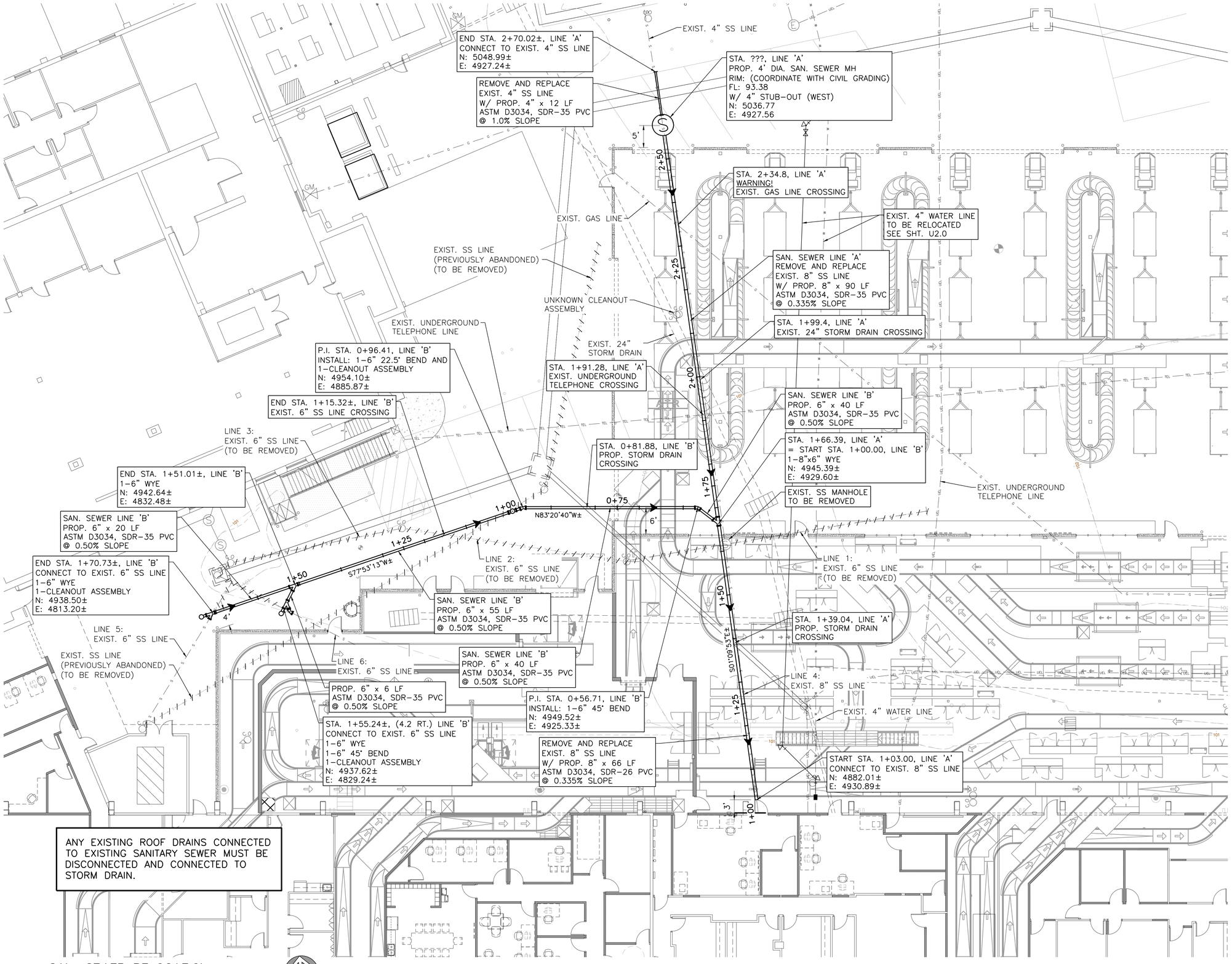

1 SAN. SEWER RELOCATION

SCALE 1" = 10'

GENERAL NOTES

A. ALL SEWER LINE INSTALLATION SHALL BE IN ACCORDANCE WITH DETAIL NO. 170/U3.0 AND DETAIL NO. 171/U3.0.

B. ALL SEWER LINE INSTALLATION SHALL BE INSTALLED TO DEPTH AND SLOPE MATCHING EXISTING LINES THAT ARE BEING REPLACED AS NOTED.

C. THE BAGGAGE MAKE-UP AREA IS TO REMAIN IN OPERATION FOR THE DURATION OF THE WORK. CONTRACTOR IS TO SUBMIT A PROPOSED PHASING PLAN FOR REVIEW AND APPROVAL.

D. CONTRACTOR REQUIRES EPIA APPROVAL FOR EACH PHASE INDICATED IN THE DEMOLITION AND IMPROVEMENT PLAN PRIOR TO MOVING TO THE NEXT PHASE.

E. ACTUAL SIZE AND LOCATION OF STAGING AREA SHALL BE COORDINATED WITH AIRPORT OPERATIONS.

F. LOCATION FOR CONTRACTOR PARKING WILL BE COORDINATED AND CONFIRMED BY EPIA PERSONNEL.

DEMOLITION GENERAL NOTES

A. CONTRACTOR SHALL FIELD VERIFY ALL EXISTING CONDITIONS AND DIMENSIONS PRIOR TO START OF ANY WORK. ANY DISCREPANCY SHOULD BE NOTIFIED TO THE ARCHITECT OR THE OWNER IN WRITING BEFORE PROCEEDING WITH ANY WORK.

B. ALL ITEMS INDICATED TO BE PERMANENTLY REMOVED SHALL BE REMOVED FROM SITE ON A DAILY BASIS AND LEGALLY DISPOSED OF.

C. THE CONTRACTOR SHALL OVERSEE CLEANING AND ENSURE THAT THE PREMISES ARE MAINTAINED RUBBISH FREE DURING DEMOLITION WORK. DAILY AND FINAL CLEANUP IS THE RESPONSIBILITY OF THE CONTRACTOR.

D. CONTRACTOR REQUIRES EPIA APPROVAL FOR EACH PHASE INDICATED IN THE DEMOLITION AND IMPROVEMENT PLAN PRIOR TO MOVING TO THE NEXT PHASE.

REFERENCES – BENCHMARK

DATE	REVISIONS	BY

CONSULTANT'S NAME

FREESE AND NICHOLS
414 Executive Center Blvd.,
Suite 200
El Paso, Texas 79902
Phone: (915) 260-4380
www.freese.com
Texas Registered Engineering Firm F-2144

ENGINEER'S SEAL

STATE OF TEXAS
ERIKA B. ANDERSON
100964
LICENSED PROFESSIONAL ENGINEER
05-25-16

SCALE

DATE	MAY 2016
DESIGN BY	DSH/RBA
DRAWN BY	DSH
CHKD. BY	DTB
APPD. BY	RBA
JOB NO.	16013

PROJECT NAME

EL PASO INTERNATIONAL AIRPORT
CHECKED BAGGAGE INSPECTION SYSTEM

6101 CONVAIR RD. EL PASO, TEXAS

EL PASO INTERNATIONAL

CITY OF EL PASO

SHEET TITLE

SAN. SEWER RELOCATION

U1.0

FILE NO. 238512

SHEET__OF__

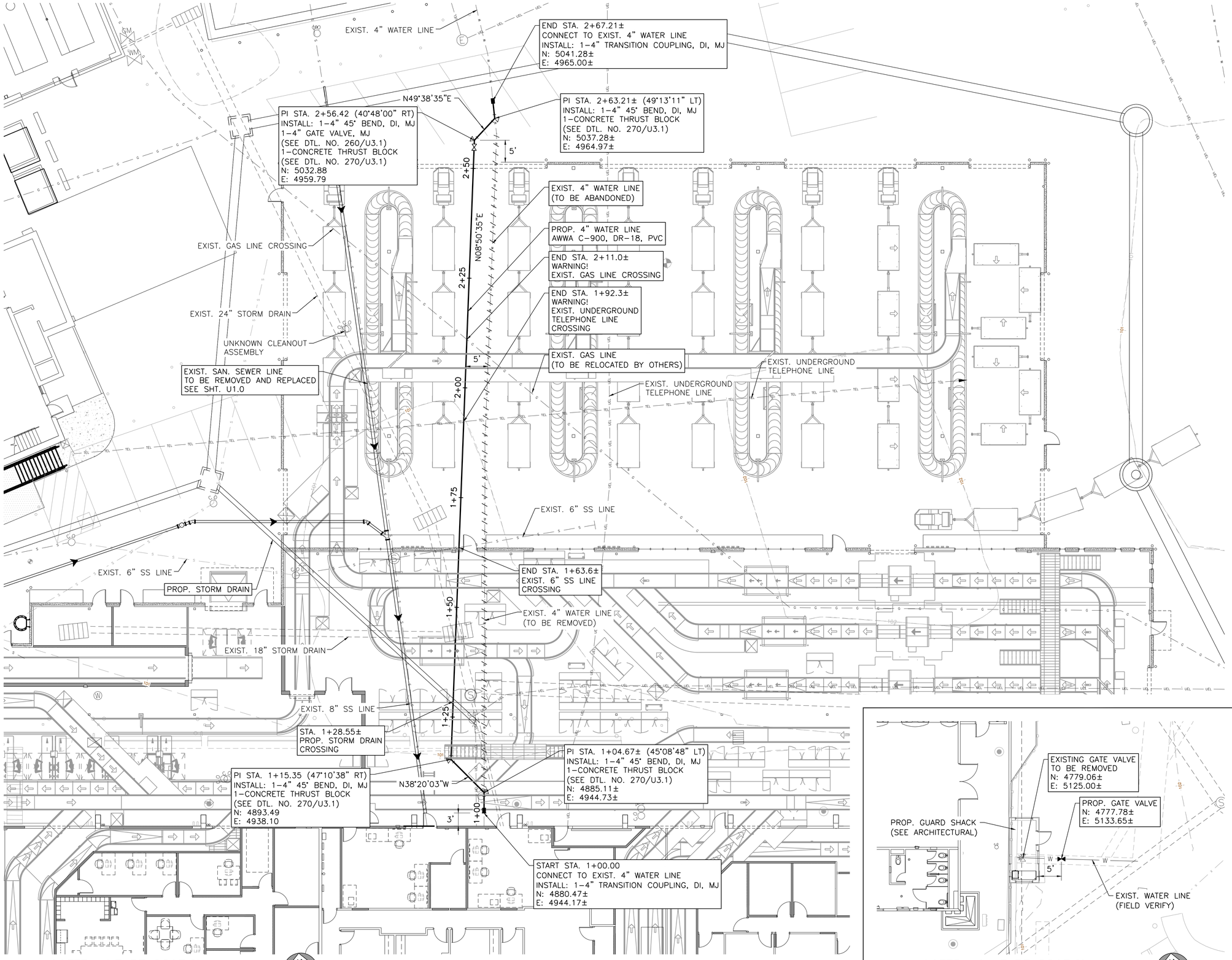

1 WATER LINE RELOCATION

SCALE 1" = 10'

PLAN NORTH

2 WATER VALVE RELOCATION

SCALE 1" = 10'

PLAN NORTH

GENERAL NOTES

A. ALL WATER LINE INSTALLATION SHALL BE A MINIMUM DEPTH OF 4 FT. IN ACCORDANCE WITH DETAIL NO. 170/U3.0 AND DETAIL NO. 171/U3.0

B. THE BAGGAGE MAKE-UP AREA IS TO REMAIN IN OPERATION FOR THE DURATION OF THE WORK. CONTRACTOR IS TO SUBMIT A PROPOSED PHASING PLAN FOR REVIEW AND APPROVAL.

C. CONTRACTOR REQUIRES EPIA APPROVAL FOR EACH PHASE INDICATED IN THE DEMOLITION AND IMPROVEMENT PLAN PRIOR TO MOVING TO THE NEXT PHASE.

D. ACTUAL SIZE AND LOCATION OF STAGING AREA SHALL BE COORDINATED WITH AIRPORT OPERATIONS.

E. LOCATION FOR CONTRACTOR PARKING WILL BE COORDINATED AND CONFIRMED BY EPIA PERSONNEL.

DEMOLITION GENERAL NOTES

A. CONTRACTOR SHALL FIELD VERIFY ALL EXISTING CONDITIONS AND DIMENSIONS PRIOR TO START OF ANY WORK. ANY DISCREPANCY SHOULD BE NOTIFIED TO THE ARCHITECT OR THE OWNER IN WRITING BEFORE PROCEEDING WITH ANY WORK.

B. ALL ITEMS INDICATED TO BE PERMANENTLY REMOVED SHALL BE REMOVED FROM SITE ON A DAILY BASIS AND LEGALLY DISPOSED OF.

C. THE CONTRACTOR SHALL OVERSEE CLEANING AND ENSURE THAT THE PREMISES ARE MAINTAINED RUBBISH FREE DURING DEMOLITION WORK. DAILY AND FINAL CLEANUP IS THE RESPONSIBILITY OF THE CONTRACTOR.

D. CONTRACTOR REQUIRES EPIA APPROVAL FOR EACH PHASE INDICATED IN THE DEMOLITION AND IMPROVEMENT PLAN PRIOR TO MOVING TO THE NEXT PHASE.

REFERENCES – BENCHMARK

DATE	REVISIONS	BY

CONSULTANT'S NAME

FREESE AND NICHOLS
414 Executive Center Blvd.,
Suite 200
El Paso, Texas 79902
Phone: (915) 260-4380
www.freese.com
Texas Registered Engineering Firm F-2144

ENGINEER'S SEAL

STATE OF TEXAS
ERIKA B. ANDERSON
100964
LICENSED
PROFESSIONAL ENGINEER
05-25-16

SCALE

DATE	MAY 2016
DESIGN BY	DDH/RBA
DRAWN BY	DDH
CHKD. BY	DTB
APPD. BY	RBA
JOB NO.	16-03

PROJECT NAME

EL PASO INTERNATIONAL AIRPORT
CHECKED BAGGAGE INSPECTION SYSTEM

6701 CONVAIR RD EL PASO, TEXAS

EL PASO INTERNATIONAL AIRPORT

CITY OF EL PASO

SHEET TITLE

WATER LINE RELOCATION

U2.0

FILE NO. 238512

SHEET__OF___

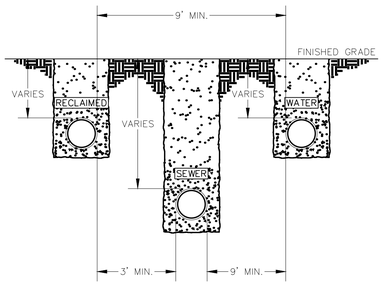

SECTION

GENERAL NOTES:
1. SEPARATION DISTANCES SHALL FOLLOW TEXAS COMMISSION ON ENVIRONMENTAL QUALITY STANDARD REQUIREMENTS.
2. MINIMUM SEPARATION DISTANCES SHOWN. IF CONDITIONS DO NOT ALLOW FOR INDICATED DISTANCES REFER TO DETAILS 161, 162 & 163.
3. RECLAIMED WATER LINE AT OR ABOVE SEWER LINE.

STANDARD DETAIL	DATE: 8/3/2006 REV: 3/28/2007	SEPARATION DISTANCE POTABLE WATER, SANITARY SEWER AND RECLAIMED WATER N.T.S.	EL PASO WATER UTILITIES PUBLIC SERVICE BOARD	DETAIL No. 160

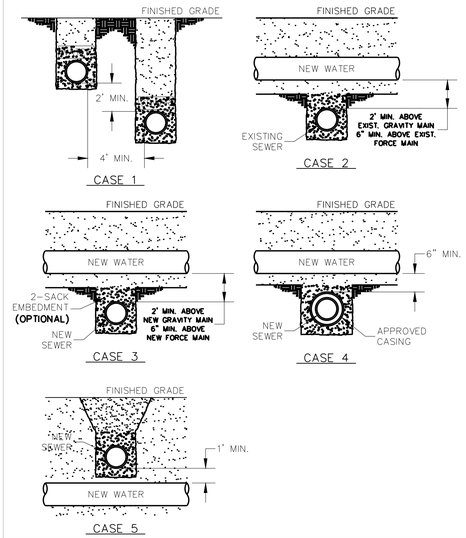

GENERAL NOTES:
1. NEW OR E: ISTING POTABLE WATER AND SANITARY SEWER MAINS.
2. SEPARATION DISTANCES SHALL FOLLOW TE: AS COMMISSION ON ENVIRONMENTAL : UALITY STANDARD RE: UIREMENTS.

CONSTRUCTION KEY NOTES
WHEN STANDARD NINE : : FOOT SEPARATION DISTANCE CANNOT BE ACHIEVED : : SEPARATION SHALL BE DETERMINED ACCORDING TO THE FOLLOWING CONDITIONS : :

CASE 1. GRAVITY SANITARY SEWER MAIN OR FORCE MAIN PARALLEL TO POTABLE WATER MAIN (PER TCEQ §290.44(e)(4)(A)).
- LOCATION: : WATER ABOVE SEWER OR FORCE MAIN.
- SEWER MATERIALS: E: ISTING GRAVITY MAIN :PVC SDR35 OR CLAY: OR FORCE MAIN TO REMAIN IF NOT LEAKING-IF LEAKING: MUST BE REPLACED WITH PVC :15: :PSI: OR DI. NEW GRAVITY MAIN OR FORCE MAIN RE: :UIRES PVC :15: :PSI: OR DI.
- SEPARATE TRENCHES SHALL BE USED.

CASE 2. NEW POTABLE WATER MAIN CROSSING E: ISTING GRAVITY SANITARY SEWER MAIN OR E: ISTING FORCE MAIN (PER TCEQ §290.44(e)(4)(B)(i) AND §290.44(e)(4)(B)(ii).
- LOCATION: : WATER ABOVE SEWER OR FORCE MAIN.
- SEWER MATERIALS: E: ISTING GRAVITY MAIN :PVC SDR35 OR CLAY: OR FORCE MAIN TO REMAIN IF NOT LEAKING-IF LEAKING: REPLACE ONE PIPE SEGMENT PER CASE 3 RE: :UIREMENTS.
- CENTER ONE SEGMENT OF WATER PIPE OVER SEWER MAIN OR FORCE MAIN.
- MINIMUM PIPE SEGMENT LENGTH FOR WATER PIPE SHALL BE 18 FEET LONG.

CASE 3. NEW POTABLE WATER MAIN CROSSING NEW GRAVITY SANITARY SEWER MAIN OR NEW FORCE MAIN (PER TCEQ §290.44(e)(4)(B)(iii), §290.44(e)(4)(B)(v) AND §290.44(e)(4)(B)(vi)) : :
- LOCATION: : WATER ABOVE SEWER OR FORCE MAIN.
- SEWER MATERIALS: NEW GRAVITY MAIN - PVC :15: :PSI: : : DI RE: :UIRED: CENTER UNDER WATER MAIN. NEW FORCE MAIN - PVC :15: PSI: OR DI RE: :UIRED. FORCE MAIN TO BE EMBEDDED IN CEMENT STABILI: ED BACKFILL THE TOTAL LENGTH OF ONE PIPE PLUS 12" BEYOND THE JOINT AT EACH END.
- CENTER ONE SEGMENT OF WATER PIPE OVER SEWER PIPE OR FORCE MAIN.
- MINIMUM PIPE SEGMENT LENGTH FOR WATER AND SEWER SHALL BE 18 FEET LONG.
- FOR NEW GRAVITY SEWER ONLY: IN LIEU OF PVC :15: PSI: OR DI: INSTALL ONE PIPE SEGMENT OF SDR35: SEWER MAIN MUST BE EMBEDDED IN CEMENT STABILI: ED BACKFILL THE TOTAL LENGTH OF ONE PIPE PLUS 12" BEYOND THE JOINT AT EACH END.

CASE : : NEW POTABLE WATER MAIN CROSSING NEW GRAVITY SANITARY SEWER MAIN OR NEW FORCE MAIN (PER TCEQ §290.44(e)(4)(B)(iv)(I) : :)
- LOCATION: WATER ABOVE SEWER OR FORCE MAIN.
- SEWER MATERIALS: NEW GRAVITY MAIN - SDR35 ACCEPTABLE: NEW FORCE MAIN - PVC :15: PSI: OR DI RE: :UIRED. IN ADDITION: SEWER MAIN OR FORCE MAIN MUST BE ENCASED IN DI OR STEEL: TWO NOMINAL SI: ES LARGER THAN MAIN AND AT LEAST 18 FEET LONG.
- CENTER CASING PIPE ON WATER MAIN.

CASE 5. NEW GRAVITY SANITARY SEWER MAIN OR NEW FORCE MAIN CROSSING NEW POTABLE WATER MAIN (PER TCEQ §290.44(e)(4)(B)(iv)(II) : :)
- LOCATION: : SEWER OR FORCE MAIN ABOVE WATER.
- NEW GRAVITY MAIN OR FORCE MAIN RE: :UIRES ONE PIPE SEGMENT OF PVC :15: :PSI: OR DI. IN ADDITION: WATER MUST BE DI OR STEEL OR ENCASED IN DI OR STEEL: TWO NOMINAL SI: ES LARGER THAN MAIN AND AT LEAST 18 FEET LONG.
- CENTER ONE SEGMENT OF SEWER PIPE ON WATER MAIN.

STANDARD DETAIL	DATE: 8/3/2006 REV: 8/21/2007	SEPARATION DISTANCE SANITARY SEWER AND POTABLE WATER (SPECIAL CONDITIONS) N.T.S.	EL PASO WATER UTILITIES PUBLIC SERVICE BOARD	DETAIL No. 161

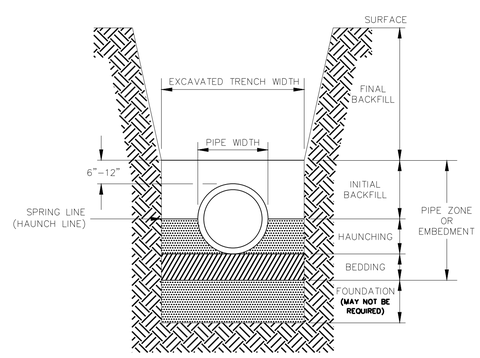

GENERAL NOTES:
1. DETAIL DRAWING TERMINOLOGY IS IN ACCORDANCE WITH ASTM D-2321.
2. UNLESS OTHERWISE PERMITTED BY THE ENGINEER. ALL MATERIAL IN THE EMBEDMENT ZONE SHALL BE HOMOGENOUS.

STANDARD DETAIL	DATE: 11/1992 REV: 3/28/2007	TRENCH CROSS SECTION TERMINOLOGY N.T.S.	EL PASO WATER UTILITIES PUBLIC SERVICE BOARD	DETAIL No. 170

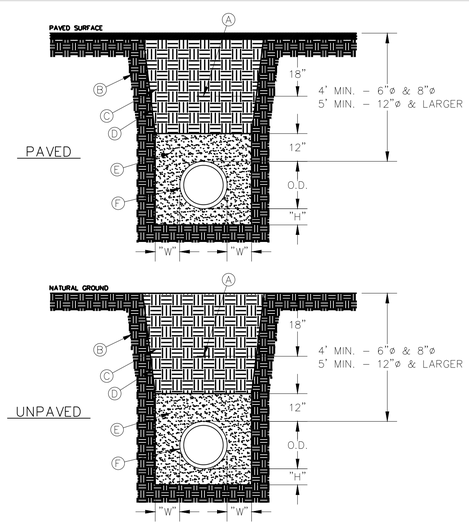

GENERAL NOTES:
1. BEDDING FOR PRESSURE AND GRAVITY PIPE IN DRY CONDITIONS.
2. PROVIDE TRENCH SAFETY SYSTEM FOR TRENCH DEPTHS GREATER THAN 5 FEET.
3. IF THE NATIVE MATERIAL EXCAVATED FROM THE TRENCH IS UNSUITABLE AS BACKFILL MATERIAL, OR THE REQUIRED COMPACTION IS UNATTAINABLE, THE CONTRACTOR SHALL, AT HIS EXPENSE, IMPORT SELECT MATERIAL TO BE MIXED WITH OR USED IN PLACE OF THE NATIVE MATERIAL. SELECT MATERIAL MUST BE APPROVED BY EPWU. SUBSTITUTE SOIL CEMENT SLURRY (1-SACK) IF REQUIRED IN SPECS.

CONSTRUCTION KEY NOTES:
A. APPROVED MARKING TAPE.
B. UNDISTURBED STABLE MATERIAL.
C. NATIVE MATERIAL BACKFILL.
PAVED CONDITION: COMPACT TO 90% DENSITY PER ASTM D-1557 MODIFIED PROCTOR.
UNPAVED CONDITION: COMPACT TO 85% DENSITY PER ASTM D-1557 MODIFIED PROCTOR.
(*SEE NOTE #3 IF THESE PREVIOUS CONDITIONS CANNOT BE MET.)
D. SLOPE TRENCH IN SANDY SOIL CONDITIONS.
E. USE CLASS II OR CLASS III SAND PER ASTM D-2487. NATIVE MATERIAL OR IMPORTED SELECT MATERIAL MEETING OR EXCEEDING THIS REQUIREMENT MAY BE USED. COMPACT TO 85% DENSITY PER ASTM D-1557 MODIFIED PROCTOR (OR 90% D-698 STANDARD PROCTOR).
F. APPROVED PIPE.
G. TRENCH DIMENSIONS AS FOLLOWS:

PIPE DIAMETER	"H"
6" - 30"	4"
GREATER THAN 30"	6"

PIPE DIAMETER	"W"
6" - 30"	8"
GREATER THAN 30"	12"

STANDARD DETAIL	DATE: 4/24/2007 REV: 2/21/2011	EMBEDMENT CLASS "A" FOR PRESSURE PIPE AND GRAVITY PIPE DRY CONDITIONS N.T.S.	EL PASO WATER UTILITIES PUBLIC SERVICE BOARD	DETAIL No. 171

GENERAL NOTES

A. THE BAGGAGE MAKE-UP AREA IS TO REMAIN IN OPERATION FOR THE DURATION OF THE WORK. CONTRACTOR IS TO SUBMIT A PROPOSED PHASING PLAN FOR REVIEW AND APPROVAL.

B. CONTRACTOR REQUIRES EPIA APPROVAL FOR EACH PHASE INDICATED IN THE DEMOLITION AND IMPROVEMENT PLAN PRIOR TO MOVING TO THE NEXT PHASE.

C. ACTUAL SIZE AND LOCATION OF STAGING AREA SHALL BE COORDINATED WITH AIRPORT OPERATIONS.

D. LOCATION FOR CONTRACTOR PARKING WILL BE COORDINATED AND CONFIRMED BY EPIA PERSONNEL.

DEMOLITION GENERAL NOTES

A. CONTRACTOR SHALL FIELD VERIFY ALL EXISTING CONDITIONS AND DIMENSIONS PRIOR TO START OF ANY WORK. ANY DISCREPANCY SHOULD BE NOTIFIED TO THE ARCHITECT OR THE OWNER IN WRITING BEFORE PROCEEDING WITH ANY WORK.

B. ALL ITEMS INDICATED TO BE PERMANENTLY REMOVED SHALL BE REMOVED FROM SITE ON A DAILY BASIS AND LEGALLY DISPOSED OF.

C. THE CONTRACTOR SHALL OVERSEE CLEANING AND ENSURE THAT THE PREMISES ARE MAINTAINED RUBBISH FREE DURING DEMOLITION WORK. DAILY AND FINAL CLEANUP IS THE RESPONSIBILITY OF THE CONTRACTOR.

D. CONTRACTOR REQUIRES EPIA APPROVAL FOR EACH PHASE INDICATED IN THE DEMOLITION AND IMPROVEMENT PLAN PRIOR TO MOVING TO THE NEXT PHASE.

REFERENCES – BENCHMARK

DATE	REVISIONS	BY

CONSULTANT'S NAME

FREESE AND NICHOLS
414 Executive Center Blvd., Suite 100
El Paso, Texas 79902
Phone: (915) 260-4380
www.freese.com
Texas Registered Engineering Firm F-2144

ENGINEER'S SEAL

STATE OF TEXAS — ERIKA B. ANDERSON — LICENSED PROFESSIONAL ENGINEER — 100964 — 05-25-16

SCALE

DATE	MAY 2016
DESIGN BY	DSH/RBA
DRAWN BY	DJH
CHKD. BY	DTB
APPD. BY	RBA
JOB NO.	160.3

PROJECT NAME

EL PASO INTERNATIONAL AIRPORT
CHECKED BAGGAGE INSPECTION SYSTEM
6701 CONVAIR RD. EL PASO, TEXAS

EL PASO INTERNATIONAL AIRPORT

CITY OF EL PASO

SHEET TITLE
STANDARD UTILITY DETAILS -1

U3.0

FILE NO. 238512

SHEET__OF__

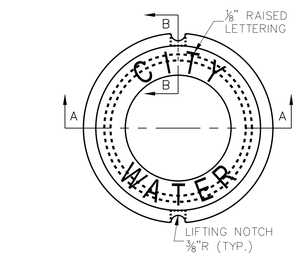

GENERAL NOTES:
1. CASTINGS TO SMOOTH AND VOID OF AIR HOLES.
2. WEIGHT OF COVER IS 18 POUNDS.

CONSTRUCTION KEY NOTES:
A. TO BE ROUGH GROUND OF ANY IRREGULARITIES THAT WOULD PREVENT A SNUG FIT.

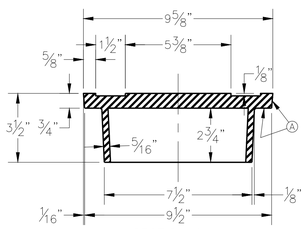

SECTION A–A

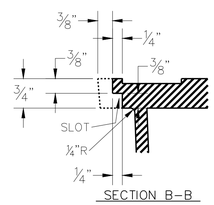

SECTION B–B

STANDARD DETAIL	DATE: 2/16/2006 REV: 12/14/2007	BONNET BOX COVER (FLIP RESISTANT) N.T.S.	EL PASO WATER UTILITIES PUBLIC SERVICE BOARD	DETAIL No. 269–2

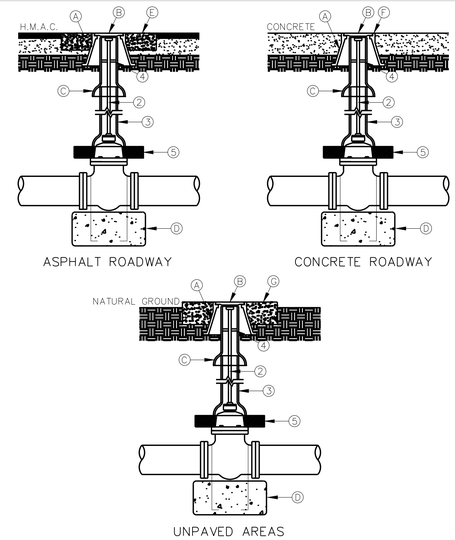

GENERAL NOTES:
1. VALVE TYPE AND VALVE ENDS SHALL BE AS SHOWN ON THE PLANS.
2. ALL BURIED VALVES 5' AND DEEPER SHALL BE PROVIDED WITH SOLID STEEL EXTENSION STEM OPERATOR WITH 2" SQUARE AWWA NUT WITHIN 36" OF VALVE BOX COVER. NUT IS TO INDICATE DIRECTION OF ROTATION TO OPEN VALVE.
3. 8" DIA. MINIMUM VITRIFIED CLAY OR SDR 35 P.V.C. PIPE, PIPE SHALL NOT REST ON VALVE BODY.
4. ¼" THICK STEEL TRASH RING VALVE BOX INSIDE DIAMETER MINUS ⅛".
5. MINIMUM 2½" CONCRETE OR BRICK ALL AROUND.
6. CLEAN BONNET BOX OF ALL DEBRIS AND SOIL.
7. COAT BURIED PIPE AND BONNET BOX PER SPECIFICATIONS, VALVE SHALL BE WRAPPED IN POLYETHYLENE IN ACCORDANCE WITH SPECIFICATIONS.

CONSTRUCTION KEY NOTES:
A. BONNET BOX (SEE DETAIL 268).
B. BONNET BOX COVER (SEE DETAILS 269–1 & 269–2)
C. FINAL EXTENSION TO BONNET BOX SHALL BE WITH BELL AND SPIGOT ENDS (CLAY OR SDR 35 P.V.C. SPOOL).
D. CONCRETE VALVE ANCHOR (SEE DETAIL 271).
E. CONCRETE COLLAR (SEE DET 184–1) FLUSH WITH TOP OF H.M.A.C.
F. BONNET BOX FLUSH WITH TOP OF CONCRETE, CONCRETE COLLAR NOT NEEDED.
G. CONCRETE APRON (SEE DETAIL 184–2) FLUSH WITH BONNET BOX AND 2" ABOVE NATURAL GROUND.

STANDARD DETAIL	DATE: 5/1994 REV: 6/22/2009	GATE VALVE INSTALLATION N.T.S.	EL PASO WATER UTILITIES PUBLIC SERVICE BOARD	DETAIL No. 260

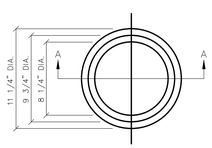

TOP VIEW

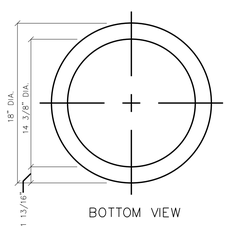

BOTTOM VIEW

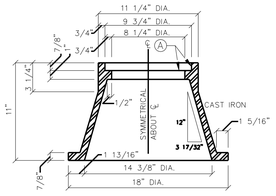

SECTION A–A

GENERAL NOTES:
1. CASTING TO BE SMOOTH AND VOID OF AIR HOLES.
2. WEIGHT OF BONNET BOX IS 95 POUNDS.

CONSTRUCTION KEY NOTES:
A. TO BE ROUGH GROUND OF ANY IRREGULARITIES THAT WOULD PREVENT A SNUG FIT.

STANDARD DETAIL	DATE: 2/1994 REV:	BONNET BOX N.T.S.	EL PASO WATER UTILITIES PUBLIC SERVICE BOARD	DETAIL No. 268

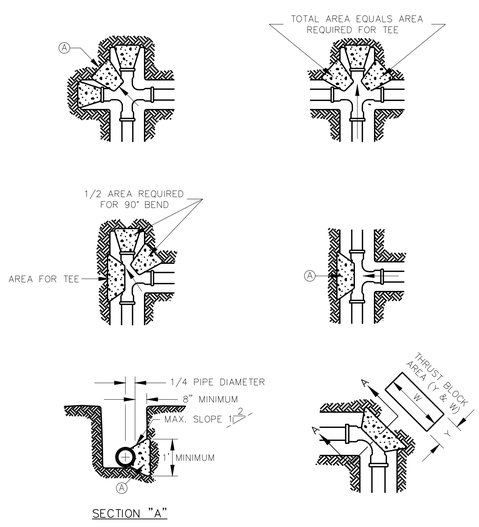

SECTION "A"

GENERAL NOTES:
1. TABLE IS BASED ON 2000#/SQ. FT. SOIL. IF CONDITIONS ARE FOUND TO INDICATE SOIL BEARING IS LESS, THE AREAS SHALL BE INCREASED ACCORDINGLY.
2. AREAS FOR PIPE LARGER THAN 18" SHALL BE CALCULATED.
3. CONCRETE SHALL HAVE A MINIMUM COMPRESSION STRENGTH OF 2500 PSI.
4. THRUST BLOCK IS TO EXTEND TO UNDISTURBED SOIL.
5. SIZE MAY BE DECREASED FOR LESSER DEGREE BENDS AS DETERMINED BY ENGINEER.
6. KEEP CONCRETE CLEAR OF M.J. OR BELL AND SPIGOT JOINTS.
7. BLOCK IN A SIMILAR MANNER AT TEES, HYDRANTS, PLUG OR OTHER LOCATIONS AS REQUIRED.
8. WHEN NECESSARY ADDITIONAL THRUST RESTRAINT METHODS MAY BE USED, SUCH AS MECHANICAL JOINT RESTRAINTS, TIE–RODS (INSTALLED PER MANUFACTURERS' RECOMMENDATIONS) OR OTHER APPROVED METHODS.

CONSTRUCTION KEY NOTES:
A. LENGTH "Y & W" AS REQUIRED TO OBTAIN BEARING AREA AGAINST UNDISTURBED SOIL.
B. ADDITIONAL EXCAVATION IF NECESSARY TO OBTAIN REQUIRED BEARING AREA.
C. MINIMUM THRUST BLOCK AREA REQUIREMENTS FOR (Y & W) AS FOLLOWS:

PIPE SIZE	WATER PIPE	
	TEE, DEAD END 90° BEND	45° AND 22 1/2° BENDS
4" & LESS	3 SQ. FEET	3 SQ. FEET
6"	4 SQ. FEET	3 SQ. FEET
8"	6 SQ. FEET	3 SQ. FEET
10"	9 SQ. FEET	5 SQ. FEET
12"	13 SQ. FEET	7 SQ. FEET
16"	23 SQ. FEET	12 SQ. FEET
18"	29 SQ. FEET	15 SQ. FEET

STANDARD DETAIL	DATE: 2/1994 REV: 8/7/2006	CONCRETE THRUST BLOCKING N.T.S.	EL PASO WATER UTILITIES PUBLIC SERVICE BOARD	DETAIL No. 270

GENERAL NOTES

A. THE BAGGAGE MAKE-UP AREA IS TO REMAIN IN OPERATION FOR THE DURATION OF THE WORK. CONTRACTOR IS TO SUBMIT A PROPOSED PHASING PLAN FOR REVIEW AND APPROVAL.

B. CONTRACTOR REQUIRES EPIA APPROVAL FOR EACH PHASE INDICATED IN THE DEMOLITION AND IMPROVEMENT PLAN PRIOR TO MOVING TO THE NEXT PHASE.

C. ACTUAL SIZE AND LOCATION OF STAGING AREA SHALL BE COORDINATED WITH AIRPORT OPERATIONS.

D. LOCATION FOR CONTRACTOR PARKING WILL BE COORDINATED AND CONFIRMED BY EPIA PERSONNEL.

DEMOLITION GENERAL NOTES

A. CONTRACTOR SHALL FIELD VERIFY ALL EXISTING CONDITIONS AND DIMENSIONS PRIOR TO START OF ANY WORK. ANY DISCREPANCY SHOULD BE NOTIFIED TO THE ARCHITECT OR THE OWNER IN WRITING BEFORE PROCEEDING WITH ANY WORK.

B. ALL ITEMS INDICATED TO BE PERMANENTLY REMOVED SHALL BE REMOVED FROM SITE ON A DAILY BASIS AND LEGALLY DISPOSED OF.

C. THE CONTRACTOR SHALL OVERSEE CLEANING AND ENSURE THAT THE PREMISES ARE MAINTAINED RUBBISH FREE DURING DEMOLITION WORK. DAILY AND FINAL CLEANUP IS THE RESPONSIBILITY OF THE CONTRACTOR.

D. CONTRACTOR REQUIRES EPIA APPROVAL FOR EACH PHASE INDICATED IN THE DEMOLITION AND IMPROVEMENT PLAN PRIOR TO MOVING TO THE NEXT PHASE.

REFERENCES – BENCHMARK

DATE	REVISIONS	BY

CONSULTANT'S NAME

FREESE AND NICHOLS
414 Executive Center Blvd., Suite 200
El Paso, Texas 79902
Phone: (915) 260-4380
www.freese.com
Texas Registered Engineering Firm F-2144

ENGINEER'S SEAL

STATE OF TEXAS — ERIKA B. ANDERSON — LICENSED — 100964 — PROFESSIONAL ENGINEER — 10-25-16

SCALE

DATE	MAY 2016
DESIGN BY	DSH/RBA
DRAWN BY	DDH
CHKD. BY	DTB
APPD. BY	RBA
JOB NO.	16013

PROJECT NAME

EL PASO INTERNATIONAL AIRPORT CHECKED BAGGAGE INSPECTION SYSTEM

6701 CONVAIR RD. EL PASO, TEXAS

EL PASO INTERNATIONAL AIRPORT

CITY OF EL PASO

SHEET TITLE

STANDARD UTILITY DETAILS -2

U3.1

FILE NO. 238512

SHEET__OF__

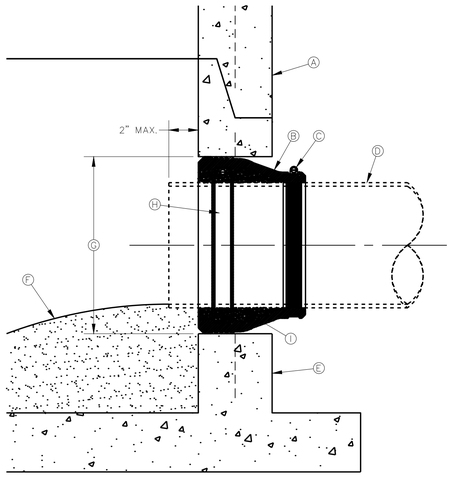

SECTION

GENERAL NOTES:
1. MANHOLE CONNECTOR SHALL BE KOR-N-SEAL OR EQUAL MEETING THE REQUIREMENTS OF ASTM C-923. CONNECTOR SHALL BE FURNISHED BY CONTRACTOR.

CONSTRUCTION KEY NOTES:
A. PRECAST MANHOLE BARREL.
B. FLEXIBLE CONNECTOR.
C. PIPE CLAMP SS 316.
D. APPROVED PIPE.
E. PRECAST MANHOLE BASE.
F. GROUT AS REQUIRED TO FORM SMOOTH CHANNEL TO MANHOLE INVERT.
G. PIPE OPENINGS/KNOCKOUTS AS REQUIRED TO FIT PIPE SIZE.
H. EXPANSION BAND SS 316.
I. FILL SPACE WITH GROUT.

STANDARD DETAIL	DATE: 11/1992 REV: 8/13/2009	PIPE CONNECTION TO MANHOLE	N.T.S.	EL PASO WATER UTILITIES PUBLIC SERVICE BOARD	DETAIL No. 376

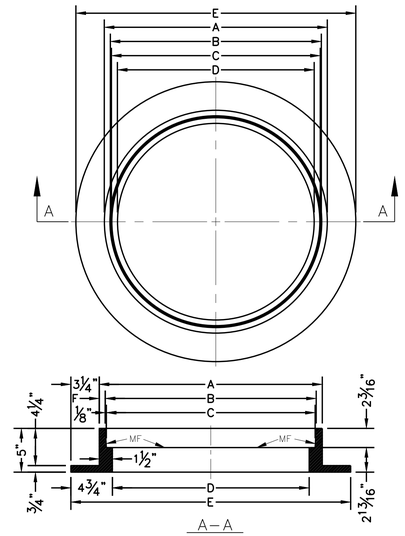

A–A

GENERAL NOTES:
1. MATCHING SURFACES MARKED "MF" TO BE FINISHED OF ANY IRREGULARITIES THAT WOULD PREVENT A SNUG FIT.
2. CASTING TO BE SMOOTH & VOID OF AIR HOLES.
3. CASTING MUST MEET REQUIREMENTS OF AASHTO M306-07.
4. AS-CAST DIMENSIONS MAY VARY 1/16"±/ PER FOOT (AASHTO M306-07).
5. WEIGHT MAY VARY 5%± (AASHTO M306-07).

MANHOLE RING	MANHOLE – ALL TYPES	*MANHOLE TYPE A, A1, A2 & C
A	33"	25½"
B	31¾"	24⅛"
C	31½"	23⅞"
D	30"	22½"
E	39½"	32"
F	⅝"	1 1/16"
WEIGHT	205 lbs.	170 lbs.

*OBSOLETE –DO NOT USE (FOR REFERENCE ONLY)

STANDARD DETAIL	DATE: 11/1992 REV: 2/21/2011	SEWER MANHOLE RING	N.T.S.	EL PASO WATER UTILITIES PUBLIC SERVICE BOARD	DETAIL No. 377

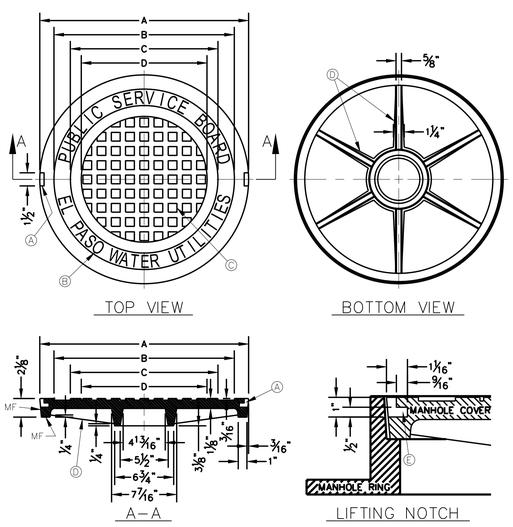

TOP VIEW

BOTTOM VIEW

A–A

LIFTING NOTCH

GENERAL NOTES:
1. MATCHING SURFACES MARKED "MF" TO BE FINISHED OF ANY IRREGULARITIES THAT WOULD PREVENT A SNUG FIT.
2. CASTING TO BE SMOOTH & VOID OF AIR HOLES.
3. CASTING MUST MEET REQUIREMENTS OF AASHTO M306-07.
4. AS-CAST DIMENSIONS MAY VARY 1/16"±/ PER FOOT (AASHTO M306-07).
5. WEIGHT MAY VARY 5%± (AASHTO M306-07).

CONSTRUCTION KEY NOTES:
A. LIFTING NOTCH.
B. 3/16" RAISED LETTERING.
C. 1" SQUARES (3/16" TALL) WITH 5/8" SPACE BETWEEN.
D. REINFORCING RIBS.
E. SLOT.

MANHOLE COVER	MANHOLE – ALL TYPES	*MANHOLE TYPE A, A1, A2 & C
A	31⅜"	23⅞"
B	28⅛"	20⅝"
C	24⅜"	16⅞"
D	21⅞"	14⅜"
WEIGHT	200 lbs.	165 lbs.

*OBSOLETE –DO NOT USE (FOR REFERENCE ONLY)

STANDARD DETAIL	DATE: 11/1992 REV: 2/21/2011	SEWER MANHOLE COVER	N.T.S.	EL PASO WATER UTILITIES PUBLIC SERVICE BOARD	DETAIL No. 378

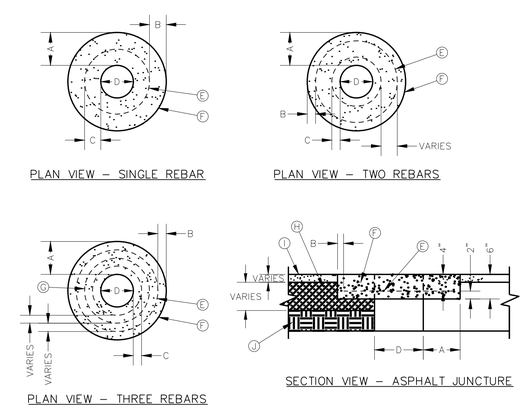

PLAN VIEW – SINGLE REBAR

PLAN VIEW – TWO REBARS

PLAN VIEW – THREE REBARS

SECTION VIEW – ASPHALT JUNCTURE

GENERAL NOTES:
1. THE CONCRETE COLLAR SHOULD BE CAST IN-PLACE CONCRETE (MINIMUM 28 DAY COMPRESSIVE STRENGTH 4000 PSI, HIGH EARLY CONCRETE IS REQUIRED)
2. TOPS OF CONCRETE COLLAR SHALL BE FLUSH WITH ROADWAY SURFACE OR FINISHED GRADE UNLESS OTHERWISE SPECIFIED BY THE ENGINEER.
3. ANY DISTURBED SUBGRADE UNDER THE CONCRETE COLLAR SHALL BE COMPACTED TO 95% DENSITY ± 3% OPTIMUM MOISTURE CONTENT IN ACCORDANCE WITH ASTM D-1557.
4. ANY DISTURBED BASE COARSE UNDER THE CONCRETE COLLAR SHALL BE COMPACTED TO 100% DENSITY ± 2% OPTIMUM MOISTURE CONTENT IN ACCORDANCE WITH ASTM D-1557.
5. PROVIDE A MINIMUM OF 1 1/2" OF CONCRETE COVER FOR ALL REINFORCEMENT STEEL.
6. REINFORCING SHALL MEET ASTM C-478 AND TRAFFIC LOADING (HS-20).
7. NO. 3 REINFORCING STEEL HOOPS SHALL BE SPACED EQUALLY.

CONSTRUCTION KEY NOTES:
E. #3 REINFORCING STEEL TYP.
F. CONCRETE COLLAR.
G. #3 REINFORCING STEEL EQUALLY SPACED.
H. COMPACTED BASE COARSE.
I. PAVEMENT.
J. COMPACTED SUBGRADE.

"D" DIAMETER OF PENETRATION	NUMBER OF #3 REINFORCING STEEL BARS	"A" MINIMUM CONCRETE HORIZONTAL DIMENSION FROM PENETRATION	"B" MINIMUM CLEARANCE FROM EDGE OF CONCRETE COLLAR TO CENTER OF NEAREST REBAR	"C" MINIMUM CLEARANCE FROM PENETRATION EDGE TO CENTER OF NEAREST REBAR
0" TO 6"	1	6"	1½"	4½"
6.1" TO 18"	2	6"	1½"	1½"
18.1" AND OVER	3	9"	1½"	1½"

STANDARD DETAIL	DATE: 8/9/2006 REV: 11/6/2008	CONCRETE COLLAR INSTALLATION IN PAVED AREAS	N.T.S.	EL PASO WATER UTILITIES PUBLIC SERVICE BOARD	DETAIL No. 184-1

GENERAL NOTES

A. THE BAGGAGE MAKE-UP AREA IS TO REMAIN IN OPERATION FOR THE DURATION OF THE WORK. CONTRACTOR IS TO SUBMIT A PROPOSED PHASING PLAN FOR REVIEW AND APPROVAL.

B. CONTRACTOR REQUIRES EPIA APPROVAL FOR EACH PHASE INDICATED IN THE DEMOLITION AND IMPROVEMENT PLAN PRIOR TO MOVING TO THE NEXT PHASE.

C. ACTUAL SIZE AND LOCATION OF STAGING AREA SHALL BE COORDINATED WITH AIRPORT OPERATIONS.

D. LOCATION FOR CONTRACTOR PARKING WILL BE COORDINATED AND CONFIRMED BY EPIA PERSONNEL.

DEMOLITION GENERAL NOTES

A. CONTRACTOR SHALL FIELD VERIFY ALL EXISTING CONDITIONS AND DIMENSIONS PRIOR TO START OF ANY WORK. ANY DISCREPANCY SHOULD BE NOTIFIED TO THE ARCHITECT OR THE OWNER IN WRITING BEFORE PROCEEDING WITH ANY WORK.

B. ALL ITEMS INDICATED TO BE PERMANENTLY REMOVED SHALL BE REMOVED FROM SITE ON A DAILY BASIS AND LEGALLY DISPOSED OF.

C. THE CONTRACTOR SHALL OVERSEE CLEANING AND ENSURE THAT THE PREMISES ARE MAINTAINED RUBBISH FREE DURING DEMOLITION WORK. DAILY AND FINAL CLEANUP IS THE RESPONSIBILITY OF THE CONTRACTOR.

D. CONTRACTOR REQUIRES EPIA APPROVAL FOR EACH PHASE INDICATED IN THE DEMOLITION AND IMPROVEMENT PLAN PRIOR TO MOVING TO THE NEXT PHASE.

REFERENCES – BENCHMARK

DATE	REVISIONS	BY

CONSULTANT'S NAME

FREESE AND NICHOLS
414 Executive Center Blvd., Suite 200
El Paso, Texas 79902
Phone: (915) 260-4380
www.freese.com
Texas Registered Engineering Firm F-2144

ENGINEER'S SEAL

STATE OF TEXAS
ERIKA B. ANDERSON
LICENSED
100964
PROFESSIONAL ENGINEER
05-25-16

SCALE

DATE	MAY 2016
DESIGN BY	DSH/RBA
DRAWN BY	DDH
CHKD. BY	DTB
APPD. BY	RBA
JOB NO.	16013

PROJECT NAME

EL PASO INTERNATIONAL AIRPORT
CHECKED BAGGAGE INSPECTION SYSTEM
6701 CONVAIR RD. EL PASO, TEXAS

EL PASO INTERNATIONAL AIRPORT

CITY OF EL PASO

SHEET TITLE

STANDARD UTILITY DETAILS -3

U3.2

FILE NO. 238512

SHEET__OF__

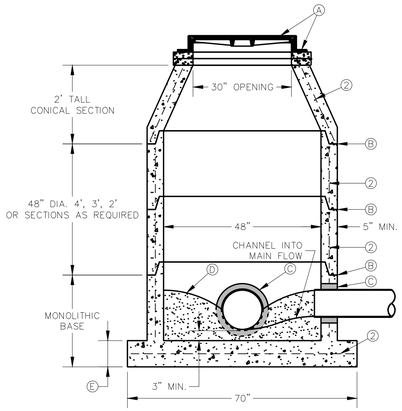

SECTION

GENERAL NOTES:

1. MANHOLE TYPE "A" SHALL BE USED FOR LINES 21" AND SMALLER.
2. PRE-CAST MANHOLE SECTIONS SHALL BE OF REINFORCED CONCRETE CONFORMING TO ASTM C-478 AND SHALL MEET HS-20 LOADING. PROVIDE REINFORCEMENT WITHIN 3" @ OPENINGS OR KNOCKOUTS. OPENINGS (UP TO 8") MADE IN FIELD SHALL BE CORE DRILLED.
3. CEMENT SHALL BE TYPE I-II, PER ASTM C-150, AND MUST CONTAIN A MINIMUM OF 4% FLY ASH OF THE TOTAL MANHOLE WEIGHT.
4. THE BASE & RISER SHALL BE INTEGRALLY CAST. CONCRETE SHALL BE MIN. 28 DAY COMPRESSIVE STRENGTH 4000psi.
5. MANUFACTURER TO PROVIDE LIFTERS OF ADEQUATE SIZE AS NEEDED.
6. THE SUBGRADE UNDER THE BASE SHALL BE COMPACTED TO 95% DENSITY IN ACCORDANCE WITH ASTM D-1557.
7. MANHOLES BELOW GROUNDWATER TO BE EXTERNALLY AND INTERNALLY COATED WITH BITUMINOUS COATING.

CONSTRUCTION KEY NOTES:

A. MANHOLE RING AND COVER (SEE DETAILS 377 & 378). SET FRAME AND COVER FLUSH WITH ROADWAY SURFACE OR FINISHED GRADE (SEE DETAIL 185).
B. ALL JOINTS TO BE TONGUE, GROOVE AND SEALED WITH RAM-NEK OR APPROVED EQUAL.
C. PIPE OPENINGS/KNOCKOUTS AS REQUIRED TO FIT PIPE SIZE AND SHALL HAVE FLEXIBLE PIPE TO MANHOLE CONNECTORS (COMPRESSION TYPE ASTM-923), "KOR-N-SEAL" OR APPROVED EQUAL.
D. GROUT AS REQUIRED.
E. CONCRETE BASE SHALL BE 8" FOR MH's UP TO 12' DEEP AND 12" FOR DEPTHS GREATER THAN 12'.

STANDARD DETAIL	DATE: 11/1992 REV: 2/8/2013	MANHOLE TYPE "A"	N.T.S.	EL PASO WATER UTILITIES / PUBLIC SERVICE BOARD	DETAIL No. 370-1

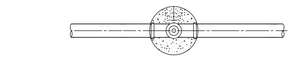

PLAN

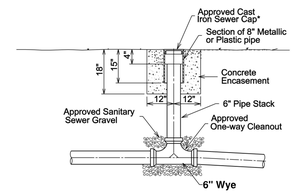

PROFILE

* Approved Sewer Cap
(Heavy Duty)

1 SANITARY SEWER
TWO-WAY CLEANOUT ASSEMBLY
N.T.S

GENERAL NOTES

A. THE BAGGAGE MAKE-UP AREA IS TO REMAIN IN OPERATION FOR THE DURATION OF THE WORK. CONTRACTOR IS TO SUBMIT A PROPOSED PHASING PLAN FOR REVIEW AND APPROVAL.

B. CONTRACTOR REQUIRES EPIA APPROVAL FOR EACH PHASE INDICATED IN THE DEMOLITION AND IMPROVEMENT PLAN PRIOR TO MOVING TO THE NEXT PHASE.

C. ACTUAL SIZE AND LOCATION OF STAGING AREA SHALL BE COORDINATED WITH AIRPORT OPERATIONS.

D. LOCATION FOR CONTRACTOR PARKING WILL BE COORDINATED AND CONFIRMED BY EPIA PERSONNEL.

DEMOLITION GENERAL NOTES

A. CONTRACTOR SHALL FIELD VERIFY ALL EXISTING CONDITIONS AND DIMENSIONS PRIOR TO START OF ANY WORK. ANY DISCREPANCY SHOULD BE NOTIFIED TO THE ARCHITECT OR THE OWNER IN WRITING BEFORE PROCEEDING WITH ANY WORK.

B. ALL ITEMS INDICATED TO BE PERMANENTLY REMOVED SHALL BE REMOVED FROM SITE ON A DAILY BASIS AND LEGALLY DISPOSED OF.

C. THE CONTRACTOR SHALL OVERSEE CLEANING AND ENSURE THAT THE PREMISES ARE MAINTAINED RUBBISH FREE DURING DEMOLITION WORK. DAILY AND FINAL CLEANUP IS THE RESPONSIBILITY OF THE CONTRACTOR.

D. CONTRACTOR REQUIRES EPIA APPROVAL FOR EACH PHASE INDICATED IN THE DEMOLITION AND IMPROVEMENT PLAN PRIOR TO MOVING TO THE NEXT PHASE.

REFERENCES – BENCHMARK

DATE	REVISIONS	BY

CONSULTANT'S NAME

FREESE AND NICHOLS
414 Executive Center Blvd.,
Suite 200
El Paso, Texas 79902
Phone: (915) 260-4380
www.freese.com
Texas Registered Engineering Firm F-2144

ENGINEER'S SEAL

STATE OF TEXAS
ERIKA B. ANDERSON
LICENSED
100964
PROFESSIONAL ENGINEER
10-25-16

SCALE

DATE	MAY 2016
DESIGN BY	DSH/RBA
DRAWN BY	DJH
CHKD. BY	DTB
APPD. BY	RBA
JOB NO.	16013

PROJECT NAME

EL PASO INTERNATIONAL AIRPORT
CHECKED BAGGAGE INSPECTION SYSTEM
6701 CONVAIR RD EL PASO, TEXAS

EL PASO INTERNATIONAL

CITY OF EL PASO

SHEET TITLE
STANDARD UTILITY DETAILS -4

U3.3

FILE NO. 238512

SHEET__OF__

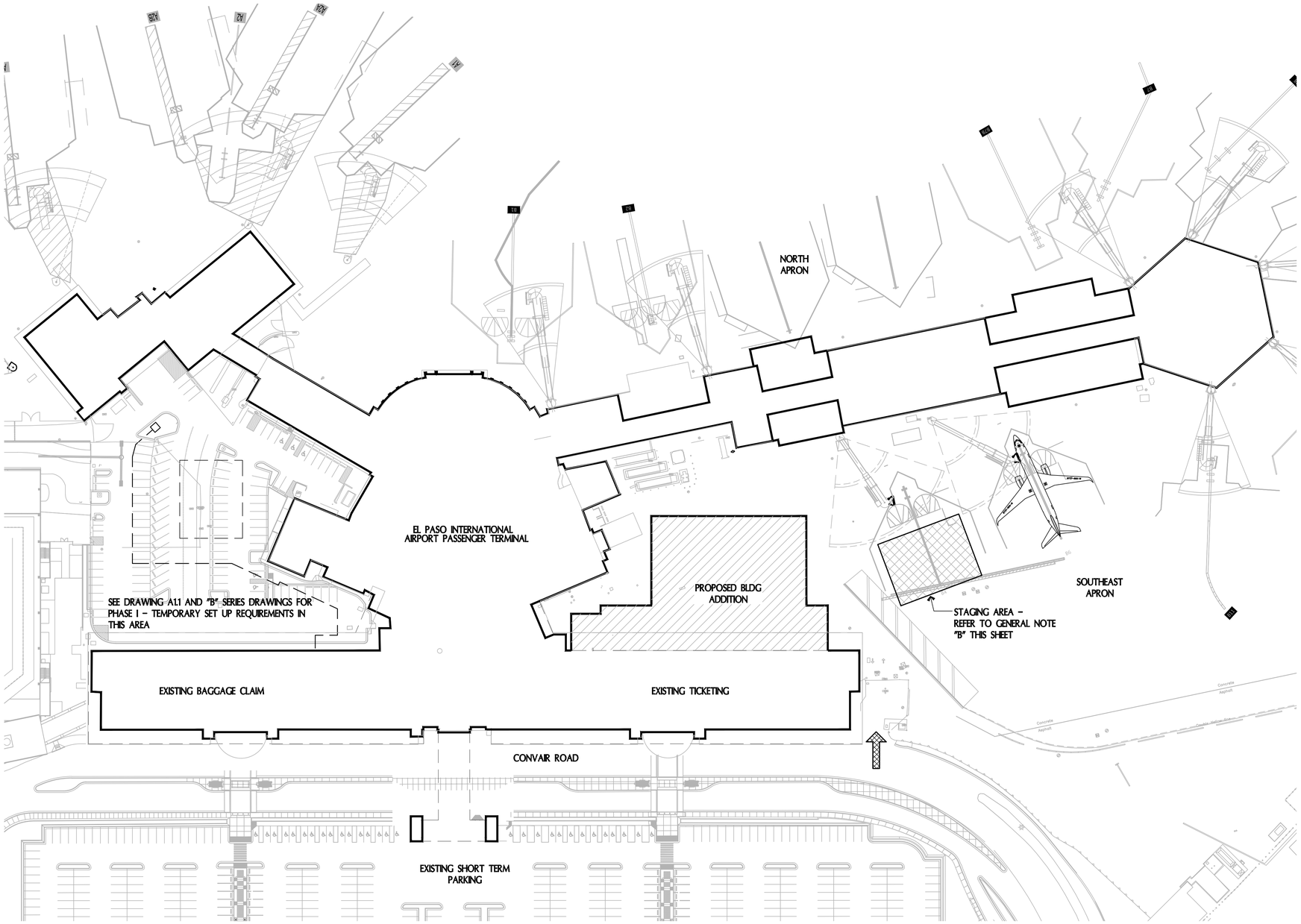

1 OVERALL SITE/KEY PLAN

SCALE 1" = 60'-0"

PLAN NORTH

SECURITY NOTES

1. All work areas shall be locked and secured at the end of each workday.

2. Contractor access points and times to airport property shall be limited to those designated by airport operations.

3. Access to telephone rooms and security areas is strictly controlled by airport operations. Access to these areas shall require coordination with airport operations.

4. Contractor procedures for operating vehicles at the El Paso International Airport (ELP) are as follows:
   a. The procedures apply to all personnel who operate vehicles at ELP. The procedures must be reviewed and understood prior to beginning vehicle operations. Violations of these procedures will be subject to loss of identification badge and fines covered by the City of El Paso Municipal Code Title 14.
   b. Vehicles operating within security fencing are limited to those displaying company logos affixed on both sides of the vehicle and must be on official company business.
   c. All vehicle operations within the security fences at ELP shall be accomplished by persons who have passed the ELP ramp drivers test and have an "R" attached to their ELP identification badge. Training for the driving test is each individual's responsibility. Airport operations will provide the Contractor study manual. The material will be in English; translation to Spanish shall be the Contractor's responsibility.
   d. All vehicle escort/delivery operations within the security fences at ELP shall be supervised by persons who have passed the ELP ramap drivers test and have an "R" attached to their ELP identification badge. Additionally, an individual granted escort authorization in the SIDA and Sterile areas must have an "E" designation on their airport identification badge.
   e. Supervisors are responsible to ensure all construction vehicle operations on airport property are conducted in accordance with the El Paso International Airport operating instructions, ground vehicle operations rules and regulations.
   f. No vehicle may be operated on the aircraft movement area without prior arrangements with airport operations.

5. Contractor identification badge requirements at ELP are as follows:
   a. Contractors shall complete and submit a security badge agreement/contract with airport operations for approval.
   b. Contractors shall designate an individual as an Authorized Signatory. The Authorized Signatory is responsible for signing for badges for the contractor. The Authorized Signatory must meet the following requirements before airport identification badges are issued to the Contractor.
      i. All persons designated as an Authorized Signatory must submit documentation that establishes their identity and employment eligibility and undergo a Security Threat Assessment (STA) prior to performing Authorized Signatory responsibilities.
      ii. The designated Authorized Signatory must attend one Authorized Signatory training session. Subsequently, the Authorized Signatory must attend the Authorized Signatory training on a yearly basis. Schedule of sessions provided by the Airport Badging Office.
      iii. Additional requirements for the Authorized Signatory if the construction project is located in the Security Identification Display Area(s) (SIDA) or Sterile area of the airport:
      a. All persons will attend security training. Airport Operations shall provide the training and it will last not more than two hours.
      b. All persons seeking unescorted access to the Airport's SIDA and/or Sterile area will submit their fingerprints to the Airport Badging Office for criminal history check prior to authorizing approval for airport badges.

      Once the Authorized Signatory has completed the above mentioned requirements, the badging application process can begin for the Contractor.

   c. Airport Badging Application and Renewal Fees listed below are applicable to all persons seeking an airport identification badge:

Badging Fees Effective September 1, 2013

ITEM	FEE
SIDA / Sterile Badge Initial Application Fee (Includes fingerprinting)	$110.00 (non refundable)
SIDA / Sterile Badge Renewal Fee (Airport Badge expires annually)	$45.00 (non refundable)
AOA or Parking Badge Initial Application Fee	$45.00 (non refundable)
AOA or Parking Badge Renewal Fee (Airport Badge expires annually)	$35.00 (non-refundable)
Lost/Stolen/Not Returned Badge Fee	$110.00
Key Replacement Fee	$10.00

   d. All identification badges issued to the Contractor, the Contractor's employees and subcontractors badges shall be returned to airport operations at the conclusion of the scope of work. All workers must be badged and a $110.00 charge per badge will be deposited prior to acquiring a badge. This deposit will be returned and the final pay application paid when all badges have been returned to the Airport.
   e. All persons seeking an airport identification badge will attend security training. Airport operations shall provide the training.

(CONTINUED)

SECURITY NOTES CONT.

   f. All persons seeking an airport identification badge will submit a five-year work history to the airport badging office. The Contractor will verify five years of the five-year work history.
   g. All persons seeking an airport identification badge will submit documentation that establishes their identity and employment eligibility and undergo a Security Threat Assessment (STA) prior to receiving an airport identification badge. An airport identification badge will not be issued to the individual until approved by the Transportation Security Administration (TSA).
   h. All persons seeking unescorted access to the airports security identification display areas (SIDA) will submit their fingerprints to the airport badging office for criminal history check prior to receiving an airport identification badge.
   i. All persons who will be working on the regular basis in the sterile area of the airport will submit their fingerprints to the airport badging office for a criminal history records check (CHRC) prior to receiving access to the sterile area.
   j. All work tools and building supplies to be used in the sterile area shall be brought into the sterile area under the assigned escort of airport operations.
   k. All persons working in the sterile area during flight operations will present themselves to screening after an escort assigned by airport operations has secured their work tools and building supplies in the sterile area.
   l. The Contractor, supervisors and individuals issued an airport identification badge will ensure that all persons working in secure areas of the airport will display the proper identification badge for that area or are under the escort of a proper airport issued identification badge holder.
   m. It is the Contractor's responsibility to ensure that all deliveries made to airport property are done within the airport security regulations and that individuals with an airport issued identification badge, which grants access to that area, will escort all delivery vehicles and personnel.
   n. The Contractor, as well as individual identification badge holders will follow all security regulations and enforce all security rules and regulation. The Contractor and individual identification badge holders will be subject to fines between $2,000 and $10,000 and penalties as called for in the El Paso Municipal Code, Title 14. The Contractor and individual identification badge holders will be responsible to reimburse the airport for all fines or penalties imposed by the federal Government for security breaches caused by the Contractor, supervisors, and subcontractors.
   o. Failure to follow or enforce security rules and regulations can lead to work being stopped and the work site being closed until security violations have been corrected. The costs and expenses for closing the work site during a security violation shall be the responsibility of the Contractor.

6. DEFINITIONS:

   a. Security Identification Display Area (SIDA). That area of airport property outside of the terminal building and within the security fence where entry to the area is controlled by access card and/or guard posts. Additionally, all cargo facilities, descriptively known as Cargo 2, Cargo 3, and Cargo 4. An airport identification badge configured to the SIDA must be displayed by unescorted individuals in the area at all times.
   b. Secured Area. All areas of airport property within the security fence and outside of the SIDA. An airport identification badge configured to the area must be in possession of all unescorted individuals in the secured area.
   c. Sterile Area. Those portions of the airport terminal beyond the Transportation Security Administration screening inspection points. All contractors, supervisors and subcontractors must be processed through the screening inspection process or under the assigned escort of airport operations when entering the sterile areas of the airport.
   d. Escort. An individual granted unescorted access to secure areas of the airport may escort non-badged individuals into secure areas for official business purposes. Escort is a common sense process; the person/persons being escorted must have official business in the area and be strictly controlled by the badge individual. An individual granted escort authorization in the SIDA and Sterile areas must have an "E" designation on their airport identification badge.

GENERAL NOTES

A. CONTRACTOR IS TO SUBMIT A PROPOSED PLAN FOR REVIEW AND APPROVAL FOR ALL REQUIRED NIGHT WORK.

B. ACTUAL SIZE AND LOCATION OF CONTRACTOR STAGING AREA SHALL BE COORDINATED WITH AIRPORT OPERATIONS. STAGING AREA ENCLOSURE IS TO MAINTAIN 30'-0" FROM NEAREST AIRPLANE ENVELOPE.

C. LOCATION FOR CONTRACTOR PARKING WILL BE COORDINATED AND CONFIRMED BY AIRPORT PERSONNEL.

LEGEND

CONTRACTOR EQUIPMENT ACCESS-VEHICULAR

CONTRACTOR STAGING AREA

REFERENCES -- BENCHMARK

DATE	REVISIONS	BY

CONSULTANT'S NAME

mijares ● mora
ARCHITECTS INC.
EL PASO, TEXAS 79912
FAX: 542-1934
111 N. FESTIVAL
TEL: 915-542-1931

ARCHITECT'S SEAL

REGISTERED ARCHITECT JORGE L. MORA 12526 STATE OF TEXAS

DATE 5-31-16

SCALE

DATE	MAY 2016
DESIGN BY	MM/BMP
DRAWN BY	S.D.
CHKD. BY	S.D.
APPD. BY	JLM
JOB NO.	1603

PROJECT NAME

EL PASO INTERNATIONAL AIRPORT
CHECKED BAGGAGE INSPECTION SYSTEM

6701 CONVAIR RD. EL PASO, TEXAS

EL PASO INTERNATIONAL

CITY OF EL PASO

SHEET TITLE

OVERALL SITE/KEY PLAN

SN.1

FILE NO. 238512

SHEET___OF___

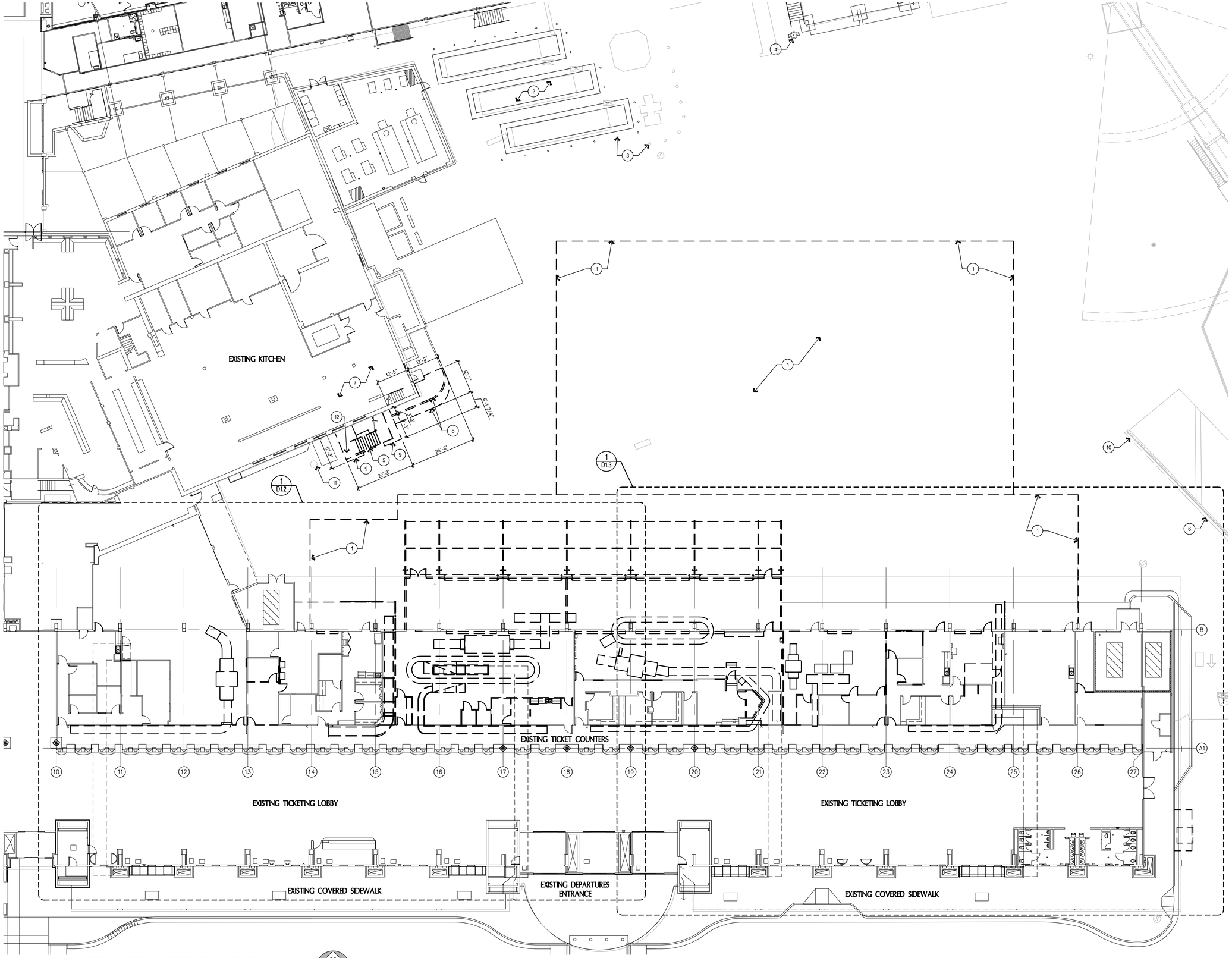

1 DEMOLITION SITE/FLOOR PLAN

SCALE 1/16" = 1'-0"

PLAN NORTH

KEYED NOTES

1. AREA OF EXISTING SITE TO BE PREPARED FOR NEW CONSTRUCTION. SEE CIVIL DRAWINGS FOR EXTENT OF SITE AND UTILITY DEMOLITION.
2. EXISTING MECHANICAL EQUIPMENT TO REMAIN.
3. EXISTING BOLLARDS TO REMAIN.
4. EXISTING FIRE HYDRANT.
5. EXISTING METAL STAIR TO BE REMOVED IN ITS ENTIRETY. SEE REVISED PLANS.
6. EXISTING CONCRETE BARRIER.
7. EXISTING BUILDING. NO WORK IN THIS AREA. UNLESS NOTED OTHERWISE.
8. PORTION OF EXISTING CONCRETE WALK AND ASPHALT PAVING TO BE REMOVED. SEE CIVIL DRAWINGS.
9. EXISTING CONCRETE PAD TO BE REMOVED.
10. PORTION OF EXISTING CONCRETE BARRIER TO BE REMOVED. SEE CIVIL DRAWINGS.
11. EXISTING GREASE TRAP IS TO BE REMOVED, SEE MECHANICAL DRAWINGS.
12. CONTRACTOR TO REMOVE EXISTING AREA OF RESCUE ASSISTANCE COMMUNICATIONS PANEL AND REINSTALL ON NEW STAIR CONFIGURATION.

LEGEND

(1) SEE KEYED NOTES

GENERAL NOTES

A. SEE CIVIL, MECHANICAL AND ELECTRICAL DRAWINGS FOR ADDITIONAL DEMOLITION WORK NOT SHOWN HERE. GENERAL NOTES SHOWN HERE ARE TYPICAL FOR ALL AREAS OF DEMOLITION.

B. CONTRACTOR REQUIRES EL PASO INTERNATIONAL AIRPORT (EPIA) APPROVAL FOR EACH PHASE INDICATED IN THE DEMOLITION AND IMPROVEMENT PLAN PRIOR TO MOVING TO THE NEXT PHASE. SEE REVISED DRAWINGS AND "B" SERIES DRAWINGS FOR ADDITIONAL INFORMATION.

C. ACTUAL SIZE AND LOCATION OF CONTRACTOR STAGING AREA SHALL BE COORDINATED WITH AIRPORT OPERATIONS.

D. LOCATION FOR CONTRACTOR PARKING WILL BE COORDINATED AND CONFIRMED BY AIRPORT (EPIA) PERSONNEL.

E. WHERE WALLS ARE SHOWN TO BE DEMOLISHED, PATCH AND REPAIR CEILING, WALLS AND FINISH FLOOR AS REQUIRED. ALL PATCH AND REPAIR WORK SHALL MATCH EXISTING.

F. CONTRACTOR IS RESPONSIBLE FOR REPAIRING ANY DAMAGES TO EXISTING BUILDING AS A RESULT OF NEW CONSTRUCTION.

G. CONTRACTOR TO VERIFY EXISTING CONDITIONS PRIOR TO DEMOLITION AND NOTIFY ARCHITECT OF ANY DISCREPANCIES PRIOR TO DEMOLITION.

H. EXISTING FIRE SPRINKLER SYSTEM IS TO REMAIN OPERATIONAL. CONTRACTOR IS TO COORDINATE AND ADJUST AS REQUIRED.

I. ALL SECURITY DOOR HARDWARE (I.E. MAGNETIC LOCKS, CARD READERS, ALARMS AND RELATED EQUIPMENT) ON DOORS AND/OR FRAMES, NOTED TO BE REMOVED, ARE TO BE SALVAGED FOR REPLACEMENT ON NEW DOORS AND FRAMES. EXCESS EQUIPMENT WILL BE SALVAGED TO THE OWNER.

J. ALL SECURITY EQUIPMENT TO BE REMOVED IS TO BE SALVAGED TO THE OWNER, INCLUDING (BUT NOT LIMITED TO) CAMERAS, CAMERA CONTROLLERS, CARD READERS, MAGNETIC LOCKS, REMOTE PANELS AND SENSORS.

DEMOLITION GENERAL NOTES

A. CONTRACTOR SHALL FIELD VERIFY ALL EXISTING CONDITIONS AND DIMENSIONS PRIOR TO START OF ANY WORK. ANY DISCREPANCY SHOULD BE NOTIFIED TO THE ARCHITECT OR THE OWNER IN WRITING BEFORE PROCEEDING WITH ANY WORK.

B. ALL ITEMS INDICATED TO BE PERMANENTLY REMOVED SHALL BE REMOVED FROM SITE ON A DAILY BASIS AND LEGALLY DISPOSED OF.

C. THE CONTRACTOR SHALL OVERSEE CLEANING AND ENSURE THAT THE PREMISES ARE MAINTAINED RUBBISH FREE DURING DEMOLITION WORK. DAILY AND FINAL CLEANUP IS THE RESPONSIBILITY OF THE CONTRACTOR.

REFERENCES -- BENCHMARK

DATE	REVISIONS	BY

CONSULTANT'S NAME

mijares ● mora
ARCHITECTS INC.
EL PASO, TEXAS 79912
FAX: 542-7594
111 N. FESTIVAL
TEL: 915-542-1991

ARCHITECT'S SEAL

REGISTERED ARCHITECT
JORGE L. MORA
12526
STATE OF TEXAS

DATE 5-31-16

SCALE

DATE	MAY 2016
DESIGN BY	MM/RMP
DRAWN BY	S.D.
CHKD. BY	S.D.
APPD. BY	JLM
JOB NO.	1603

PROJECT NAME

EL PASO INTERNATIONAL AIRPORT
CHECKED BAGGAGE INSPECTION SYSTEM

6701 CONVAIR RD. EL PASO, TEXAS

EL PASO INTERNATIONAL AIRPORT

CITY OF EL PASO

SHEET TITLE

DEMOLITION SITE PLAN

D1.1

FILE NO. 238512

SHEET__OF__

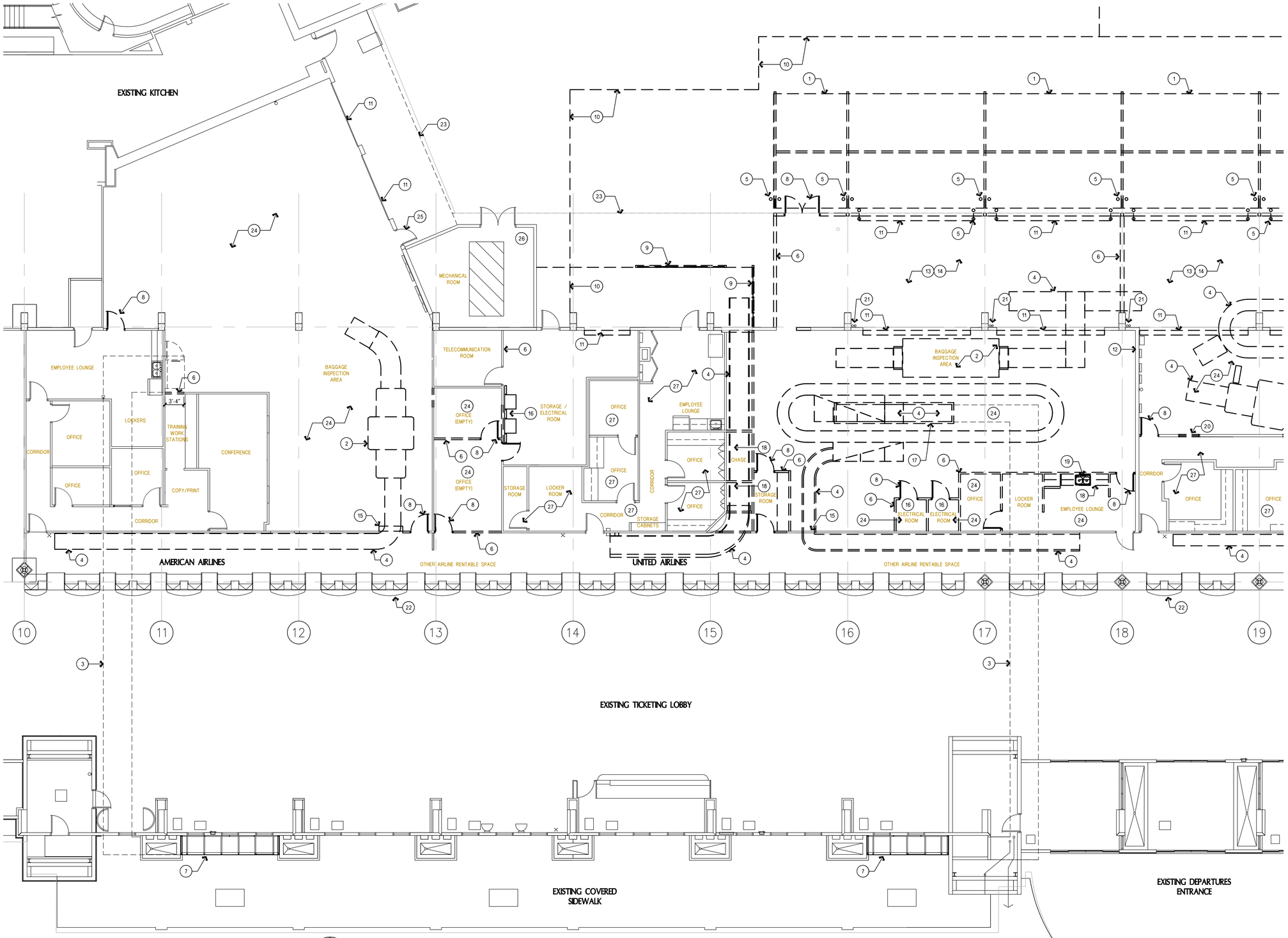

1 PARTIAL DEMOLITION FLOOR PLAN

SCALE 1/8" = 1'-0"

KEYED NOTES

1. EXISTING SHADE CANOPY IS TO BE REMOVED IN ITS ENTIRETY AND SALVAGED TO OWNER.
2. REMOVE EXISTING CONVEYOR/SCREENING EQUIPMENT.
3. EXISTING UNDERGROUND TUNNEL SYSTEM IS TO REMAIN. REMOVE EXISTING UNDERGROUND BAGGAGE CONVEYOR SYSTEM IN ITS ENTIRETY AT SOUTHWEST AIRLINES ONLY.
4. REMOVE EXISTING CONVEYOR EQUIPMENT.
5. REMOVE EXISTING STEEL COLUMNS, FOOTINGS AND BOLLARDS. (TYP.)
6. EXISTING WALL TO BE REMOVED.
7. EXISTING CURBSIDE ENCLOSURE IS TO REMAIN.
8. REMOVE EXISTING DOOR AND FRAME.
9. REMOVE EXISTING STOREFRONT/WINDOW SCREEN.
10. INDICATES AREA TO BE PREPARED FOR NEW BUILDING ENCLOSURE.
11. REMOVE EXISTING OVERHEAD DOORS AND SALVAGE TO OWNER.
12. REMOVE A PORTION OF EXISTING WALL FOR NEW CONVEYOR.
13. EXISTING CEILING/SOFFIT IN THIS AREA IS TO BE REMOVED.
14. EXISTING FLOOR SLAB IN THIS AREA IS TO BE REMOVED. AREA TO BE PREPARED FOR NEW CONSTRUCTION.
15. REMOVE EXISTING OVERHEAD SHUTTER DOOR AT CONVEYOR OPENING. SALVAGE TO OWNER.
16. SEE ELECTRICAL DRAWINGS FOR MODIFICATIONS ON THIS WALL.
17. EXISTING OPENING AT UNDERGROUND TUNNEL IS TO BE SEALED AT THIS LOCATION. SEE STRUCTURAL FOR INFILL REQUIREMENTS.
18. REMOVE EXISTING MILLWORK.
19. REMOVE EXISTING PLUMBING FIXTURES.
20. REMOVE EXISTING WINDOW.
21. EXISTING ROOF DRAIN LEADERS ARE TO BE REROUTED AS REQUIRED FOR NEW CONSTRUCTION.
22. EXISTING TICKET COUNTERS ARE TO REMAIN, TYP.
23. LINE OF EXISTING ROOF OVERHANG ABOVE.
24. EXISTING FLOOR, WALL AND CEILING FINISHES ARE TO BE REMOVED IN THEIR ENTIRETY.
25. EXISTING DOOR TO REMAIN. MODIFY DOOR HARDWARE AS REQUIRED FOR ACCESS CONTROL INTERFACE.
26. SEE CIVIL DRAWINGS FOR SCOPE OF WORK REGARDING REROUTE OF EXISTING ROOF DRAINS FROM SANITARY SEWER TO STORM DRAIN INLET.
27. EXISTING CEILING, SUPPLY REGISTERS AND RETURNS ARE TO BE REMOVED. EXISTING LIGHT FIXTURES AND CEILING DEVICES ARE TO BE REUSED AND RE-INSTALLED IN NEW CEILING.

LEGEND

(1) SEE KEYED NOTES

GENERAL NOTES

A. CONTRACTOR REQUIRES EPIA APPROVAL FOR EACH PHASE INDICATED IN THE DEMOLITION AND IMPROVEMENT PLANS PRIOR TO MOVING TO THE NEXT PHASE. SEE REVISED DRAWINGS AND "B" SERIES DRAWINGS FOR ADDITIONAL INFORMATION.

DEMOLITION GENERAL NOTES

A. CONTRACTOR SHALL FIELD VERIFY ALL EXISTING CONDITIONS AND DIMENSIONS PRIOR TO START OF ANY WORK. ANY DISCREPANCY SHOULD BE NOTIFIED TO THE ARCHITECT OR THE OWNER IN WRITING BEFORE PROCEEDING WITH ANY WORK.

B. ALL ITEMS INDICATED TO BE PERMANENTLY REMOVED SHALL BE REMOVED FROM SITE ON A DAILY BASIS AND LEGALLY DISPOSED OF.

C. THE CONTRACTOR SHALL OVERSEE CLEANING AND ENSURE THAT THE PREMISES ARE MAINTAINED RUBBISH FREE DURING DEMOLITION WORK. DAILY AND FINAL CLEANUP IS THE RESPONSIBILITY OF THE CONTRACTOR.

REFERENCES - BENCHMARK

DATE	REVISIONS	BY

CONSULTANT'S NAME

mijares ● mora
ARCHITECTS INC.
EL PASO, TEXAS 79912
111 N. FESTIVAL
TEL: 915-542-1991
FAX: 542-1994

ARCHITECT'S SEAL

REGISTERED ARCHITECT GEORGE L. MORA 12526 STATE OF TEXAS
DATE 5-31-16

SCALE

DATE	MAY 2016
DESIGN BY	MM/GRP
DRAWN BY	S.D.
CHKD. BY	S.D.
APPD. BY	JLM
JOB NO.	1603

PROJECT NAME

EL PASO INTERNATIONAL AIRPORT
CHECKED BAGGAGE INSPECTION SYSTEM

6701 CONVAIR RD. EL PASO, TEXAS

EL PASO INTERNATIONAL AIRPORT

CITY OF EL PASO

SHEET TITLE

PARTIAL DEMOLITION FLOOR PLAN

D1.2

FILE NO. 238512

SHEET___OF___

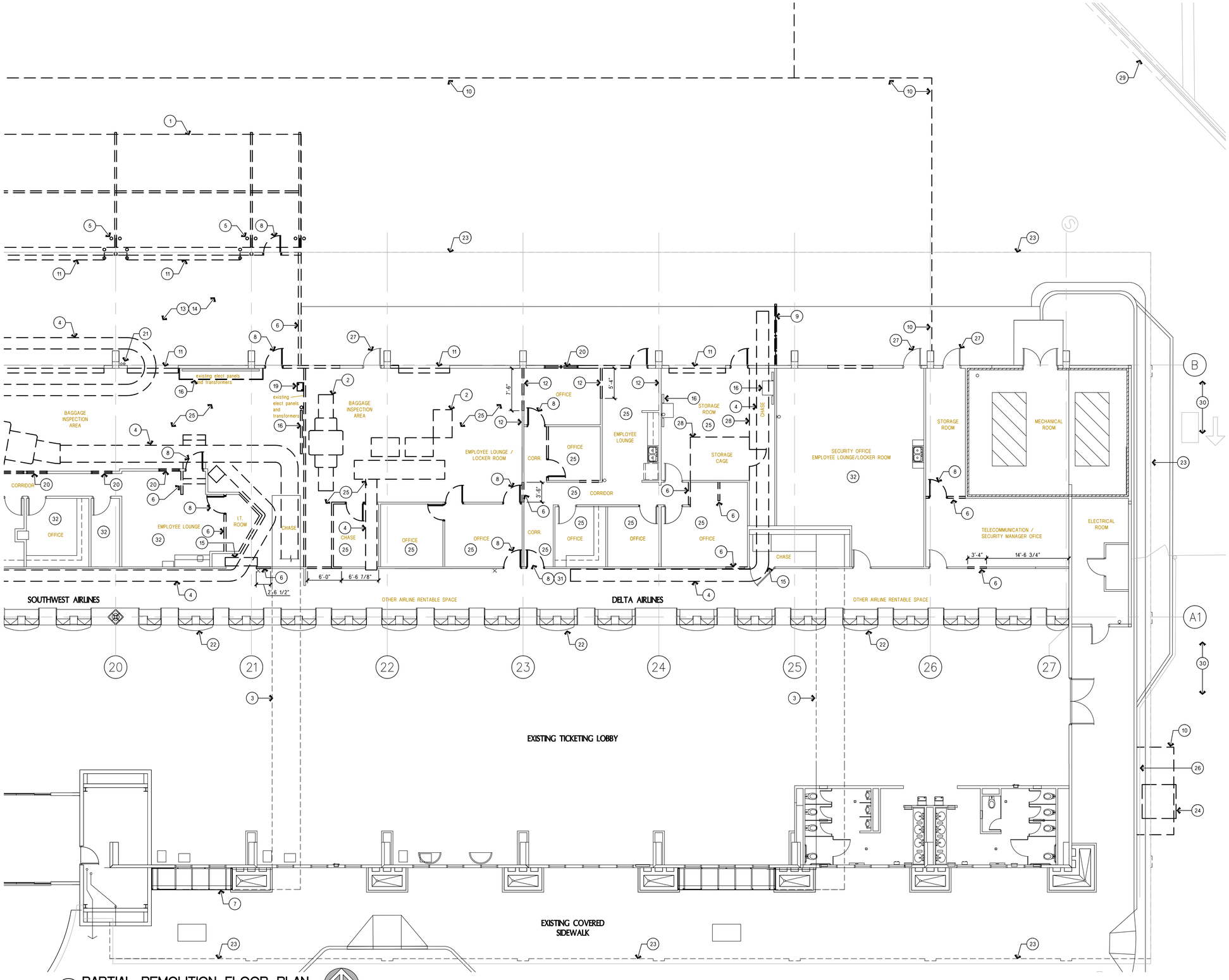

1 PARTIAL DEMOLITION FLOOR PLAN

SCALE 1/8" = 1'-0"

PLAN NORTH

KEYED NOTES

1. EXISTING SHADE CANOPY IS TO BE REMOVED IN ITS ENTIRETY AND SALVAGED TO OWNER.
2. REMOVE EXISTING CONVEYOR/SCREENING EQUIPMENT.
3. EXISTING UNDERGROUND TUNNEL SYSTEM IS TO REMAIN. REMOVE EXISTING UNDERGROUND BAGGAGE CONVEYOR SYSTEM IN ITS ENTIRETY AT SOUTHWEST AIRLINES ONLY.
4. REMOVE EXISTING CONVEYOR EQUIPMENT.
5. REMOVE EXISTING STEEL COLUMNS, FOOTINGS AND BOLLARDS. (TYP.)
6. EXISTING WALL TO BE REMOVED.
7. EXISTING CURBSIDE ENCLOSURE AT SOUTHWEST AIRLINES IS TO BE REMOVED TEMPORARILY FOR REMOVAL OF UNDERGROUND CONVEYOR. CONTRACTOR IS TO REINSTALL AND ADJUST IF REQUIRED AFTER NEW BAGGAGE HANDLING CONVEYOR IS INSTALLED.
8. REMOVE EXISTING DOOR AND FRAME.
9. REMOVE EXISTING STOREFRONT/WINDOW SCREEN.
10. INDICATES AREA TO BE PREPARED FOR NEW CONSTRUCTION.
11. REMOVE EXISTING OVERHEAD DOORS AND SALVAGE TO OWNER.
12. REMOVE A PORTION OF EXISTING WALL FOR NEW CONVEYOR.
13. EXISTING CEILING/SOFFIT IN THIS AREA IS TO BE REMOVED.
14. EXISTING FLOOR SLAB IN THIS AREA IS TO BE REMOVED. AREA TO BE PREPARED FOR NEW CONSTRUCTION.
15. REMOVE EXISTING OVERHEAD SHUTTER DOOR AT CONVEYOR OPENING. SALVAGE TO OWNER.
16. EXISTING ELECTRICAL. SEE ELECTRICAL DRAWINGS.
17. EXISTING OPENING AT UNDERGROUND TUNNEL IS TO BE SEALED AT THIS LOCATION. SEE STRUCTURAL FOR INFILL REQUIREMENTS.
18. REMOVE EXISTING MILLWORK.
19. REMOVE EXISTING PLUMBING FIXTURES.
20. REMOVE EXISTING WINDOW.
21. EXISTING ROOF DRAIN LEADERS. SEE CIVIL DRAWINGS FOR NEW WORK REQUIRED.
22. EXISTING TICKET COUNTERS ARE TO REMAIN, TYP.
23. LINE OF EXISTING ROOF OVERHANG ABOVE.
24. EXISTING GUARD SHACK IS TO BE REMOVED.
25. EXISTING FLOOR, WALL AND CEILING FINISHES ARE TO BE REMOVED IN THEIR ENTIRETY.
26. PORTION OF EXISTING RAIL TO BE CUT BACK FOR NEW CONSTRUCTION. PATCH AND REPAIR AS REQUIRED.
27. EXISTING DOORS ARE TO REMAIN. MODIFY DOOR HARDWARE AS REQUIRED FOR ACCESS CONTROL INTERFACE.
28. EXISTING FENCE ENCLOSURE TO BE REMOVED.
29. PORTION OF EXISTING CONCRETE BARRIER IS TO BE REMOVED. PATCH AND REPAIR WALL, PAVEMENT AND PAINTED STRIPING AS REQUIRED. SEE CIVIL DRAWINGS.
30. SEE CIVIL DRAWINGS FOR DEMO AND NEW PAVEMENT REQUIREMENTS IN THIS AREA.
31. RELOCATE EXISTING KEY PAD ACCESS CONTROL TO NEW DELTA AIRLINES SPACE.
32. EXISTING CEILING, SUPPLY REGISTERS AND RETURNS ARE TO BE REMOVED. EXISTING LIGHT FIXTURES AND CEILING DEVICES ARE TO BE REUSED AND RE-INSTALLED IN NEW CEILING.

LEGEND

(1) SEE KEYED NOTES

GENERAL NOTES

A. CONTRACTOR REQUIRES EPIA APPROVAL FOR EACH PHASE INDICATED IN THE DEMOLITION AND IMPROVEMENT PLANS PRIOR TO MOVING TO THE NEXT PHASE. SEE REVISED DRAWINGS AND "B" SERIES DRAWINGS FOR ADDITIONAL INFORMATION.

DEMOLITION GENERAL NOTES

A. CONTRACTOR SHALL FIELD VERIFY ALL EXISTING CONDITIONS AND DIMENSIONS PRIOR TO START OF ANY WORK. ANY DISCREPANCY SHOULD BE NOTIFIED TO THE ARCHITECT OR THE OWNER IN WRITING BEFORE PROCEEDING WITH ANY WORK.

B. ALL ITEMS INDICATED TO BE PERMANENTLY REMOVED SHALL BE REMOVED FROM SITE ON A DAILY BASIS AND LEGALLY DISPOSED OF.

C. THE CONTRACTOR SHALL OVERSEE CLEANING AND ENSURE THAT THE PREMISES ARE MAINTAINED RUBBISH FREE DURING DEMOLITION WORK. DAILY AND FINAL CLEANUP IS THE RESPONSIBILITY OF THE CONTRACTOR.

REFERENCES -- BENCHMARK

DATE	REVISIONS	BY

CONSULTANT'S NAME

mijares mora ARCHITECTS INC.
111 N. FESTIVAL
TEL: 915-542-1991
EL PASO, TEXAS 79912
FAX: 542-1994

ARCHITECT'S SEAL

REGISTERED ARCHITECT GEORGE L. MORA 12526 STATE OF TEXAS
DATE 5-31-16

SCALE

DATE	MAY 2016
DESIGN BY	MM/BMP
DRAWN BY	S.D.
CHKD. BY	S.D.
APPD. BY	JLM
JOB NO.	1603

PROJECT NAME

EL PASO INTERNATIONAL AIRPORT
CHECKED BAGGAGE INSPECTION SYSTEM

6701 CONVAIR RD. EL PASO, TEXAS

EL PASO INTERNATIONAL AIRPORT

CITY OF EL PASO

SHEET TITLE

PARTIAL DEMOLITION FLOOR PLAN

D1.3

FILE NO. 238512

SHEET___OF___

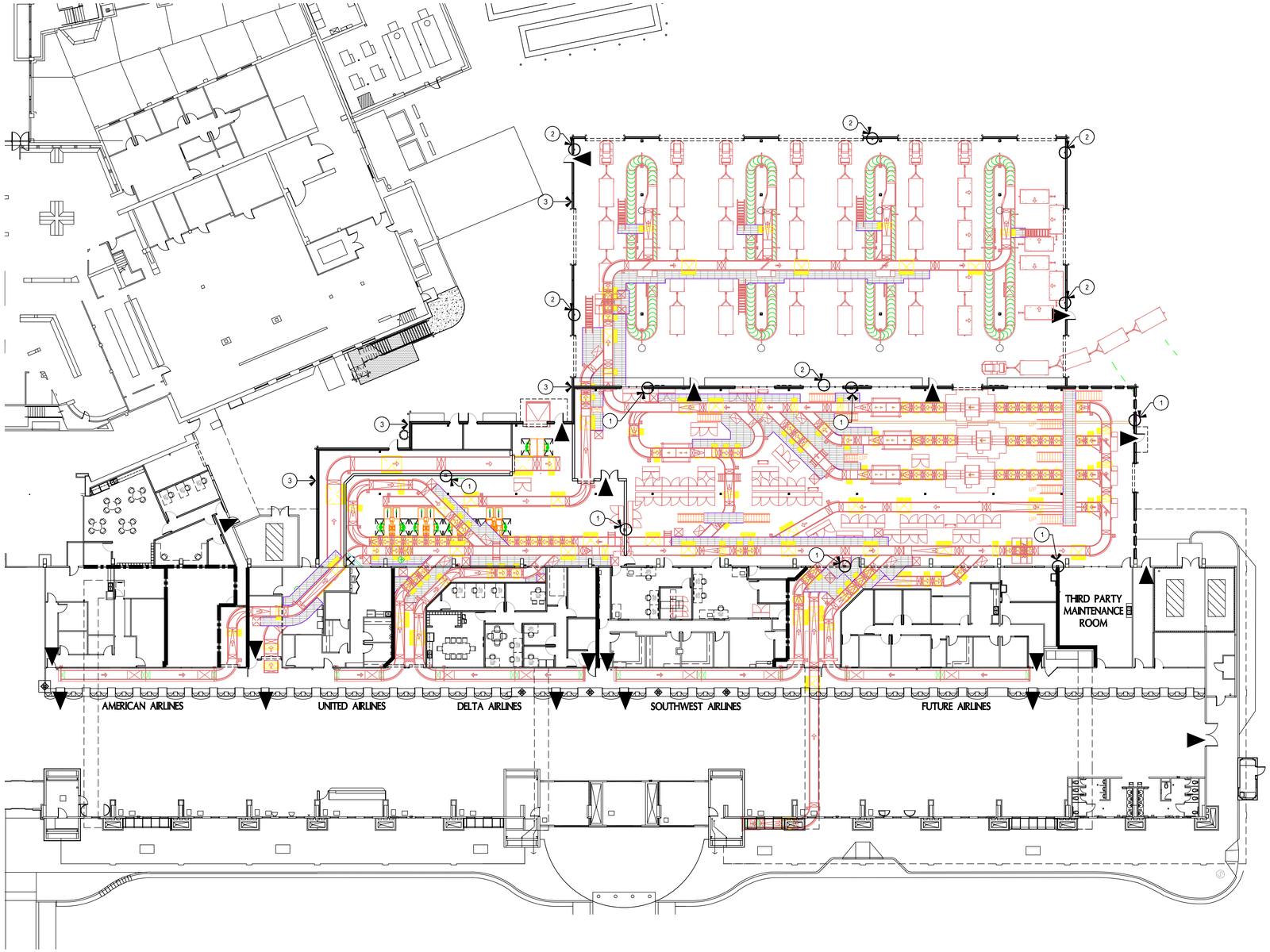

2 FIRE PROTECTION FLOOR PLAN

SCALE: 1" = 20'-0"

PLAN NORTH

KEYED NOTES

1. MULTI-PURPOSE DRY CHEMICAL TYPE FIRE EXTINGUISHER AND RECESSED FIRE EXTINGUISHER CABINET EQUAL TO MODEL 2409-RA WITH LARSEN LOC, NO. 4 , SOLID DOOR, AND TYPE A DIE CUT LETTERS, AS MANUFACTURED BY LARSEN'S MANUFACTURING. PROVIDE "FLAME SHIELD (FS)" FIRE RATED CABINET WHERE CABINET IS TO BE LOCATED WITHIN A FIRE RATED PARTITION ONLY.
2. MULTI-PURPOSE FIRE EXTINGUISHER ON MOUNTING BRACKET, EQUAL TO FIRE EXTINGUISHER MODEL MP10 AND MOUNTING BRACKET MODEL B-2, AS MANUFACTURED BY LARSEN'S MANUFACTURING.
3. 1 HR. EXTERIOR NON-LOAD BEARING WALL - TABLE 601.

FIREPROOFING GENERAL NOTES

A. APPLIED FIREPROOFING ON STRUCTURAL BUILDING ELEMENTS WILL BE USED THROUGHOUT TO ACHIEVE THE REQUIRED FIRE RATINGS AS OUTLINED ON THIS SHEET.

B. COLUMNS SHALL BE PROTECTED WITH FIRE PROOFING MATERIAL IN ACCORDANCE WITH UNDERWRITERS LABORATORIES, INC. (UL) DESIGN NO. X771 AND X772, AS APPLICABLE TO SIZE AND TYPE OF COLUMN. SEE ALSO GENERAL NOTE "F."

C. REFERENCE UL NO. P710, APPLICABLE TO DECK, BEAM, JOISTS, GIRDERS, TRUSSES, ETC. PROVIDE WHITE FINISH ON FIRE PROOFING AT EXPOSED STRUCTURE LOCATIONS.

D. CONCRETE COLUMNS SHALL MAINTAIN A MINIMUM DIMENSION OF 8" AND 10" FOR ONE AND TWO HOUR FIRE-RESISTANT RATINGS, RESPECTIVELY, PER IBC TABLE 721.2.4.

E. CAST-IN-PLACE OR PRECAST CONCRETE WALLS, (LOAD BEARING OR NON-LOAD BEARING) SHALL MAINTAIN A MINIMUM DIMENSION OF 3.5" AND 5", FOR ONE AND TWO HOUR FIRE-RESISTANT RATINGS, RESPECTIVELY, PER IBC TABLE 721.2.1.1.

F. EXPOSED FIRE PROOFING OF COLUMNS AND STRUCTURE, WHERE FURRING IS NOT INDICATED, SHALL BE ACCOMPLISHED BY THE MEANS OF AN EXPOSED INTUMESCENT MASTIC FIRE RESISTIVE COATING, AS SPECIFIED. ARCHITECT TO SELECT FROM MANUFACTURER'S FULL RANGE OF COLORS.

FIRE CODE DATA

INTERNATIONAL BUILDING CODE 2009
CONSTRUCTION TYPE: I B - TABLE 601
ALLOWABLE AREA - UNLIMITED - TABLE 503
ALLOWABLE HEIGHT - 11 STORIES - TABLE 503

OCCUPANCY:
GROUP B - BUSINESS (IBC SECTION 305)

NOTE: PER SECTION 303 SPACES THAT ARE ACCESSORY TO GROUP B ARE NOT CONSIDERED SEPARATE OCCUPANCIES IN A BUSINESS OCCUPANCY.

FIRE HYDRANT MAXIMUM DISTANCE REQUIREMENTS: (IFPC SECTION 507.5.1)
600' FROM HYDRANT TO BUILDING ON FIRE ACCESS ROAD.

EXISTING HYDRANTS: 1
HYDRANTS PROVIDED: 0

AUTOMATIC SPRINKLER SYSTEM:
YES (IBC SECTION 903.2.3)

FIRE ALARM AND DETECTION SYSTEM: (IBC SECTION 907.2.3)
FULLY SUPERVISED SYSTEM PROVIDED

FIRE EXTINGUISHERS: (IBC SECTION 906)
LOCATION: MAXIMUM TRAVEL DISTANCE-75'
NUMBER: MAXIMUM FLOOR AREA PER EXTING.-11,250 S.F.

FIRE RESISTANCE RATING REQUIREMENTS: (IBC TABLE 601)
FOR CONSTRUCTION TYPE I B:

- PRIMARY STRUCTURAL FRAME (COLUMNS, GIRDERS & TRUSSES) SUPPORTING ROOF: 1 HR. (WHERE SUPPORTING A ROOF ONLY).
  NOTE: PER IBC, METAL DECK AT ROOF IS NOT CONSIDERED PART OF THE PRIMARY STRUCTURAL FRAME AND THEREFORE IS NOT REQUIRED TO BE PROTECTED.
- EXTERIOR BEARING WALLS: 2 HR.
- INTERIOR BEARING WALLS: 1 HR. (WHERE SUPPORTING A ROOF ONLY).
- EXTERIOR NONBEARING WALLS AND PARTITIONS: 1 HR. (BASED ON FIRE SEPARATION DISTANCE BETWEEN 10 AND 30 FEET).
- INTERIOR NONBEARING WALLS AND PARTITIONS: 0 HR.
- FLOOR CONSTRUCTION (INCLUDING SUPPORTING BEAMS AND JOISTS): N/A
- ROOF CONSTRUCTION AND SECONDARY MEMBERS: 1 HR.

INCIDENTAL ACCESSORY OCCUPANCY REQUIREMENTS: (IBC TABLE 508.2.5)

- FURNACE ROOM WHERE ANY PIECE OF EQUIPMENT IS OVER 400,000 BTU PER HOUR INPUT: 1 HOUR.
- ROOMS WITH ANY BOILER OVER 15 PSI AND 10 HORSEPOWER: 1 HOUR

FIRE DOOR PROTECTION RATING: (IBC TABLE 715.4)

- 1-1/2 HR FOR A 2 HR FIRE RATED WALL
- 1 HR FOR 1 HR EXIT ENCLOSURE (STAIRS)
- 3/4 HR MIN. FOR A 1 HR FIRE RATED WALL

LEGEND

(1) SEE KEYED NOTES

EXIT DOORS

EXISTING 1 HOUR WALL CONSTRUCTION

1 HOUR FIRE RATED ASSEMBLY

GYPSUM BOARD (SMOKE PROOF) PARTITION

3 5/8" METAL STUDS (UNLESS NOTED OTHERWISE) @ 16" O.C. WITH ONE LAYER OF 5/8" TYPE "X" GYPSUM BOARD ON EACH SIDE OF STUDS AND SHALL BE CONTINUOUS TO METAL DECK ABOVE, PER UL DESIGN NO. U465. SEAL ALL PENETRATIONS.

2 HOUR FIRE RATED ASSEMBLY

8 OR 10 INCH PRECAST CONCRETE WALL PANEL

KEY PLAN

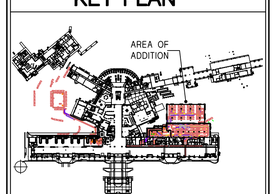

REFERENCES -- BENCHMARK

DATE	REVISIONS	BY

CONSULTANT'S NAME

mijares mora
ARCHITECTS INC.
EL PASO, TEXAS 79912
111 N. FESTIVAL
TEL: 915-542-1991
FAX: 542-1994

ARCHITECT'S SEAL

REGISTERED ARCHITECT GEORGE L. MORA 12526 STATE OF TEXAS
DATE 5-31-16

SCALE

DATE	MAY 2016
DESIGN BY	MM/RMP
DRAWN BY	S.D.
CHKD. BY	S.D.
APPD. BY	JLM
JOB NO.	1603

PROJECT NAME

EL PASO INTERNATIONAL AIRPORT
CHECKED BAGGAGE INSPECTION SYSTEM
6701 CONVAIR RD. EL PASO, TEXAS

EL PASO INTERNATIONAL AIRPORT

CITY OF EL PASO

SHEET TITLE
FIRE PROTECTION PLAN

FP.1

FILE NO. 238512

SHEET__OF__

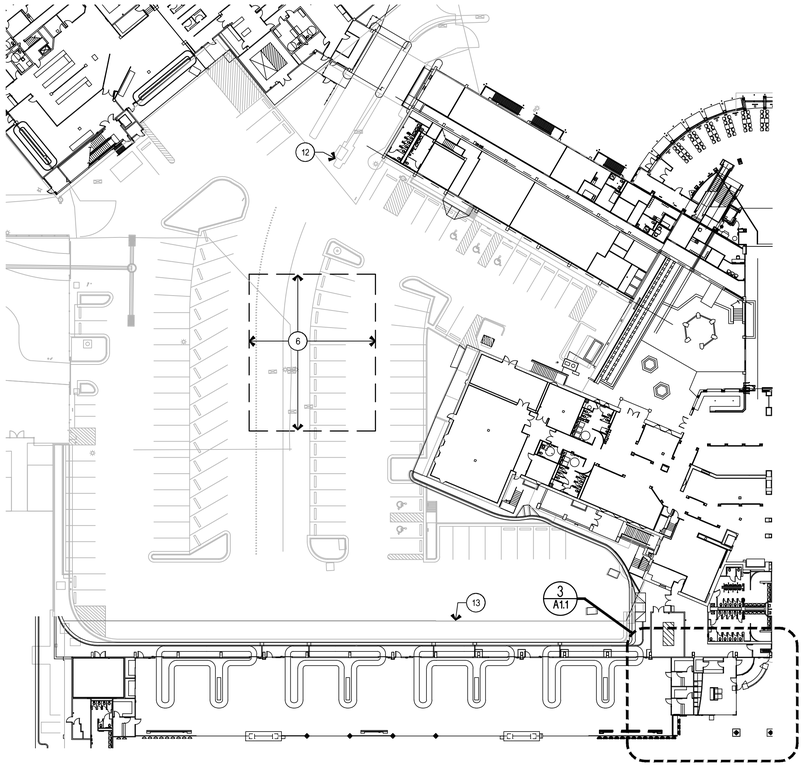

1 DEMOLITION SITE PLAN

SCALE 1" = 40'-0"

PLAN NORTH

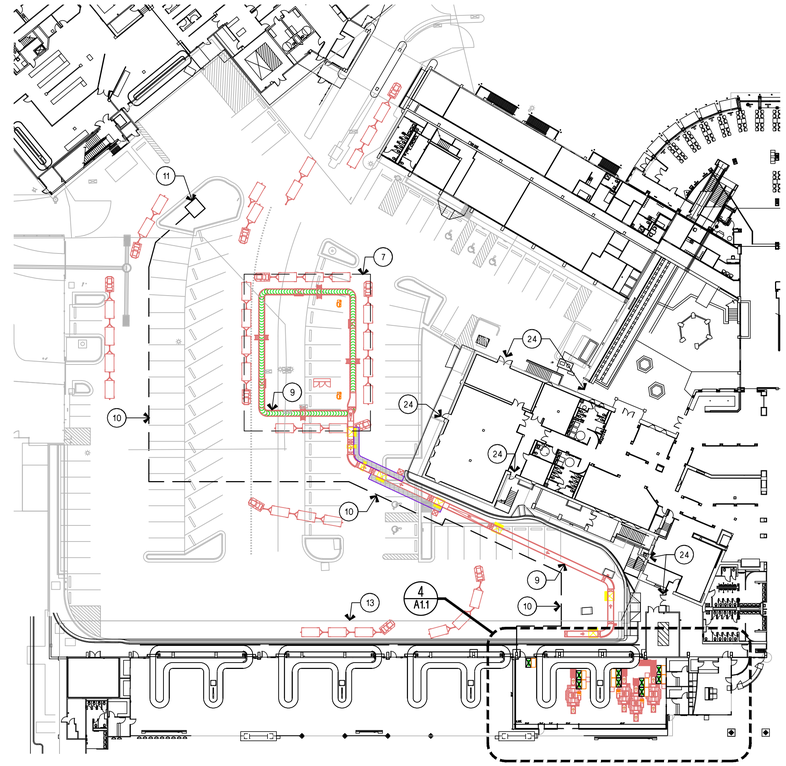

2 REVISED SITE PLAN FOR TEMPORARY BHS - PHASE I

SCALE 1" = 40'-0"

PLAN NORTH

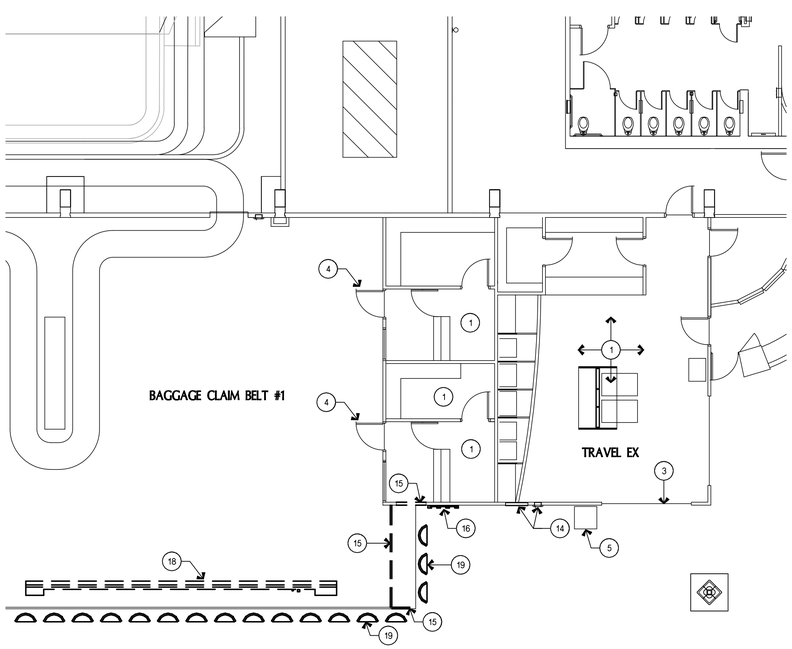

3 DEMOLITION PLAN AT BAGGAGE BELT 1 - PHASE I

SCALE 1/8" = 1'-0"

PLAN NORTH

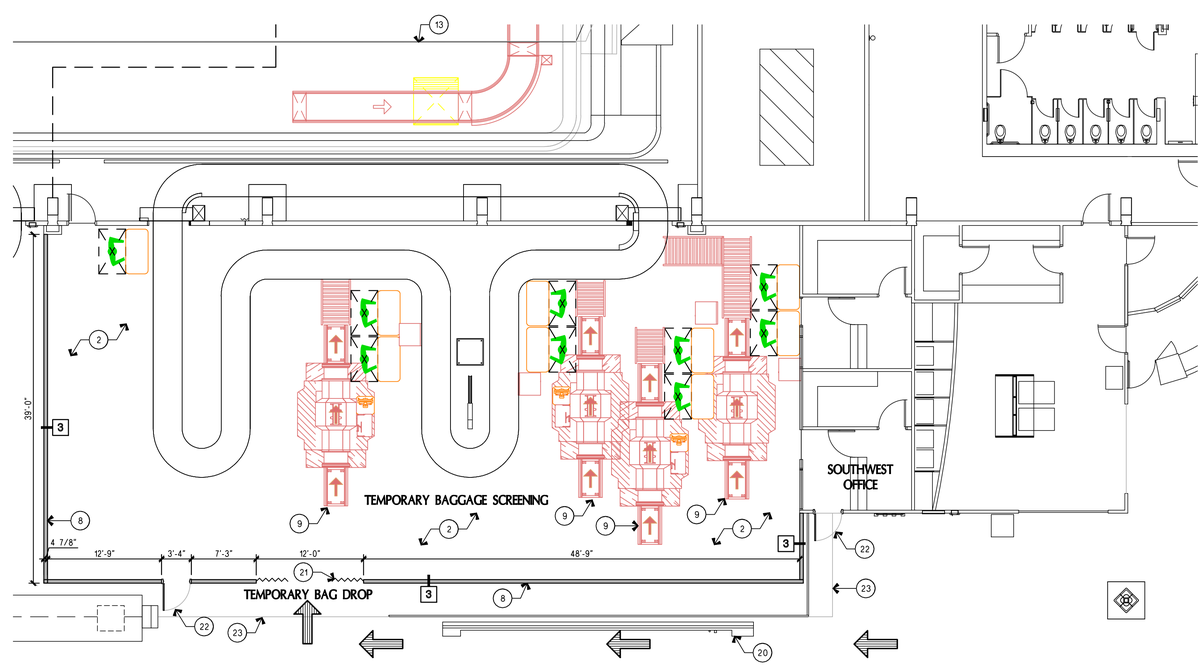

4 REVISED PLAN AT BAGGAGE BELT 1 - PHASE I

SCALE 1/8" = 1'-0"

PLAN NORTH

KEYED NOTES

1. EXISTING TO REMAIN. NO WORK IN THIS AREA.
2. SEE MECHANICAL AND ELECTRICAL DRAWINGS FOR ADDITIONAL INFORMATION FOR TEMPORARY BAGGAGE HANDLING AND SCREENING SET UP.
3. EXISTING RAIL TO BE REMAIN.
4. EXISTING DOOR TO REMAIN.
5. EXISTING ATM TO REMAIN.
6. AREA TO BE PREPARED FOR TEMPORARY BAG MAKE UP EQUIPMENT. SEE "B SERIES" DRAWINGS.
7. OVERHEAD CANOPY. SEE STRUCTURAL DRAWINGS AND ELECTRICAL DRAWINGS FOR LIGHTING.
8. TEMPORARY WALL PARTITIONS. CONTRACTOR IS TO TAKE EXTRA PRE-CAUTIONS NOT TO DAMAGE EXISTING FLOOR WHEN INSTALLING. CONTRACTOR WILL BE RESPONSIBLE FOR PATCHING AND REPAIRING TO EXISTING CONDITION AS A RESULT OF TEMPORARY CONSTRUCTION.
9. SEE "B SERIES DRAWINGS FOR BAGGAGE HANDLING SYSTEM AND SCREENING EQUIPMENT.
10. SECURITY FENCE. SEE CIVIL FOR FENCE DETAIL. CONTRACTOR IS TO VERIFY WITH OWNER FOR FINAL LAYOUT AND SECURITY FENCE REQUIREMENTS.
11. RELOCATED GUARD SHACK.
12. EXISTING GUARD SHACK AND ALL ASOOCIATED EQUIPMENT IS TO BE RELOCATED FOR NEW TEMPORARY SET UP. SEE REVISED PLAN FOR LOCATION.
13. LINE OF EXISTING OVERHANG ABOVE.
14. EXISTING FIRE EXTINGUISHER CABINET AND FIRE DEPARTMENT VALVE ARE TO REMAIN.
15. REMOVE A PORTION OF EXISTING WALL FOR NEW DOOR OPENING. PATCH AND REPAIR AS REQUIRED.
16. EXISTING GROUND TRANSPORTATION MONITOR AND COMMUNICATION DEVICES ARE TO BE RELOCATED. SEE REVISED FLOOR PLAN.
17. PORTION OF EXISTING RAIL IS TO BE REMOVED. PATCH AND REPAIR AS REQUIRED.
18. EXISTING BAGGAGE CARTS ARE TO BE REMOVED AND SALVAGED TO OWNER. VERIFY WITH AIRPORT PERSONNEL FOR NEW LOCATION. SEE REVISED PLAN.
19. REMOVE EXISTING FURNITURE AND SALVAGE TO OWNER. VERIFY WITH AIRPORT PERSONNEL FOR NEW LOCATION.
20. RELOCATED BAGGAGE CARTS.
21. 8'-0" TALL ACCORDION GATE WITH SECURITY LOCK.
22. NEW 3'-0" X 7'-0" X 1 3/4" SOLID CORE WOOD DOOR WITH HOLLOW METAL FRAME. COORDINATE DOOR HARDWARE REQUIREMENTS WITH AIRPORT PERSONNEL.
23. LINE OF FLOOR FINISH TRANSITION.
24. EXISTING DOORS, REGARDING ACCESS CONTROL AND FACING THE TEMPORARY BAGGAGE MAKE UP AREA TO MODIFIED AS REQUIRED. COORDINATE WITH AIRPORT PERSONNEL.

LEGEND

1	SEE KEYED NOTES
3	WALL TYPES
	PASSENGER TRAFFIC FLOW

GENERAL NOTES

A. WHERE WALLS ARE SHOWN TO BE REMOVED, PATCH AND REPAIR FLOOR FINISH, WALLS, CEILING AS REQUIRED TO MATCH EXISTING.

B. CONTRACTOR IS RESPONSIBLE FOR PROVIDING PROTECTION OF ALL FINISHES IN EXISTING BUILDING DURING CONSTRUCTION.

C. CONTRACTOR IS RESPONSIBLE FOR REPAIRING ANY DAMAGES AS A RESULT OF NEW CONSTRUCTION.

D. SEE STRUCTURAL, MECHANICAL, ELECTRICAL AND "B" SERIES DRAWINGS FOR ADDITIONAL WORK NOT SHOWN HERE.

E. CONTRACTOR IS TO COORDINATE AND VERIFY WITH AIRPORT PERSONNEL FOR ALL REQUIREMENTS FOR THE TEMPORARY BAGGAGE HANDLING SYSTEM AND SCREENING SHOWN ON THIS DRAWING. CONTRACTOR SHALL NOT PROCEED UNLESS AIRPORT PERSONNEL HAS REVIEWED AND APPROVED ALL PHASES OF WORK.

REFERENCES -- BENCHMARK

DATE	REVISIONS	BY

CONSULTANT'S NAME

mijares ● mora
ARCHITECTS INC.
EL PASO, TEXAS 79912
111 N. FESTIVAL
TEL: 915-542-1991
FAX: 542-7934

ARCHITECT'S SEAL

REGISTERED ARCHITECT
JORGE L. MORA
12526
STATE OF TEXAS
DATE 5-31-16

SCALE

DATE	MAY 2016
DESIGN BY	MM/JMP
DRAWN BY	S.D.
CHKD. BY	S.D.
APPD. BY	JLM
JOB NO.	1603

PROJECT NAME

EL PASO INTERNATIONAL AIRPORT
CHECKED BAGGAGE INSPECTION SYSTEM

6701 CONVAIR RD. EL PASO, TEXAS

EL PASO INTERNATIONAL AIRPORT

CITY OF EL PASO

SHEET TITLE

TEMPORARY BHS-PHASE I

A1.1

FILE NO. 238512

SHEET___OF___

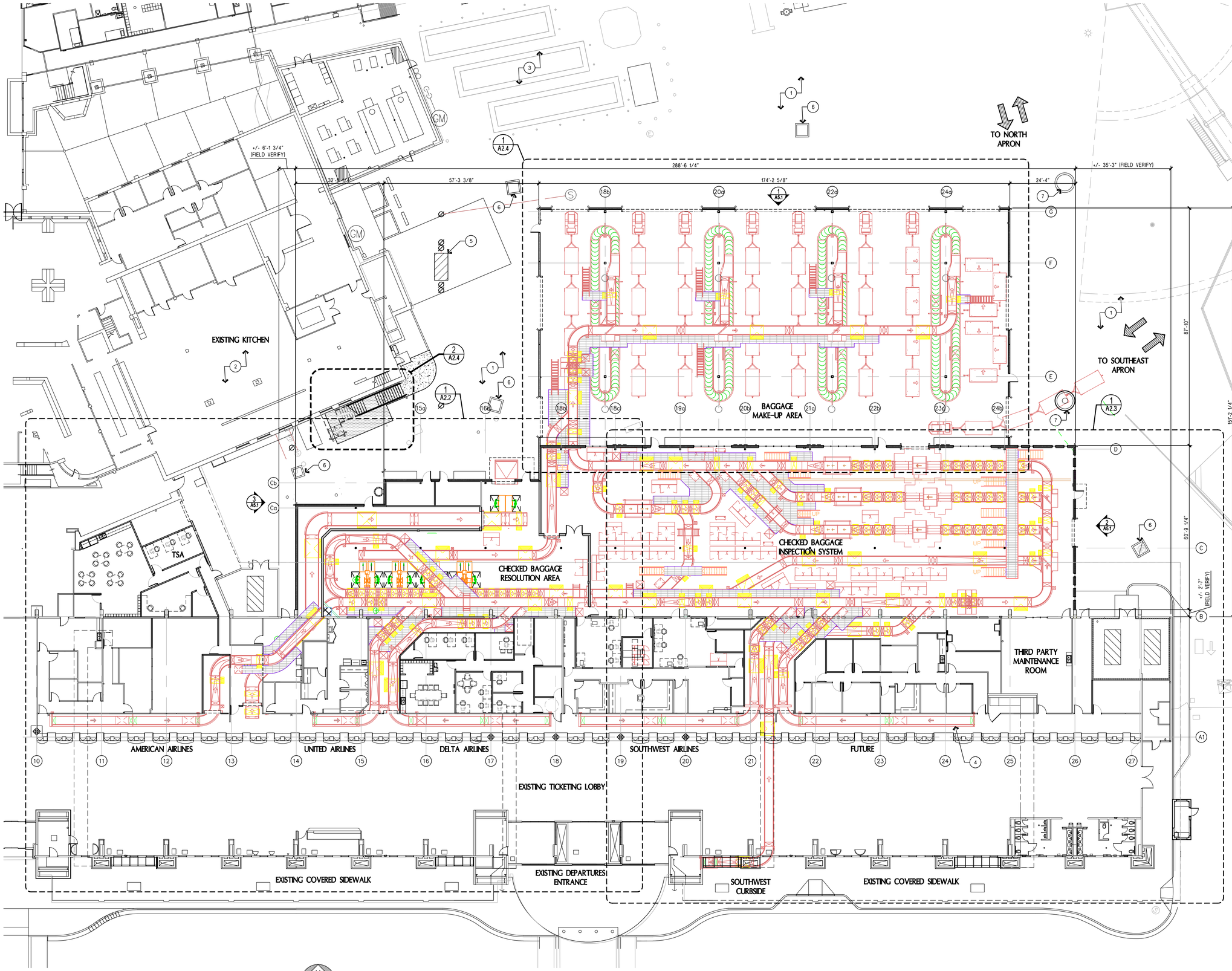

1 REVISED SITE/FLOOR PLAN

SCALE 1/16" = 1'-0"

PLAN NORTH

KEYED NOTES

1. SEE CIVIL DRAWINGS AND UTILITY DRAWINGS FOR SCOPE OF WORK IN THIS AREA.
2. EXISTING BUILDING. NO WORK IN THIS AREA.
3. EXISTING CHILLERS. NO WORK IN THIS AREA.
4. MILITARY AND BASEBALL TEAM BAGGAGE INPUT.
5. GREASE TRAP, SEE MECHANICAL DRAWINGS.
6. STORM DRAIN INLET, SEE CIVIL AND UTILITY DRAWINGS.
7. MANHOLE. SEE CIVIL AND UTILITY DRAWINGS.

LEGEND

1 SEE KEYED NOTES

GENERAL NOTES

A. WHERE WALLS ARE SHOWN TO BE REMOVED, PATCH AND REPAIR FLOOR FINISH, WALLS, CEILING AS REQUIRED TO MATCH EXISTING.

B. CONTRACTOR IS RESPONSIBLE FOR PROVIDING PROTECTION OF ALL FINISHES IN EXISTING BUILDING DURING CONSTRUCTION.

C. CONTRACTOR IS RESPONSIBLE FOR REPAIRING ANY DAMAGES AS A RESULT OF NEW CONSTRUCTION.

REFERENCES -- BENCHMARK

DATE	REVISIONS	BY

CONSULTANT'S NAME

mijares ● mora
ARCHITECTS INC.
EL PASO, TEXAS 79912
FAX: 542-1934
111 N. FESTIVAL
TEL: 915-542-1931

ARCHITECT'S SEAL

REGISTERED ARCHITECT JORGE L. MORA 12526 STATE OF TEXAS

DATE 5-31-16

SCALE

DATE	MAY 2016
DESIGN BY	MM/JMP
DRAWN BY	S.D.
CHKD. BY	S.D.
APPD. BY	JLM
JOB NO.	1603

PROJECT NAME

EL PASO INTERNATIONAL AIRPORT
CHECKED BAGGAGE INSPECTION SYSTEM

6701 CONVAIR RD. EL PASO, TEXAS

EL PASO INTERNATIONAL AIRPORT

CITY OF EL PASO

SHEET TITLE

REVISED FLOOR PLAN

A2.1

FILE NO. 238512

SHEET___OF___

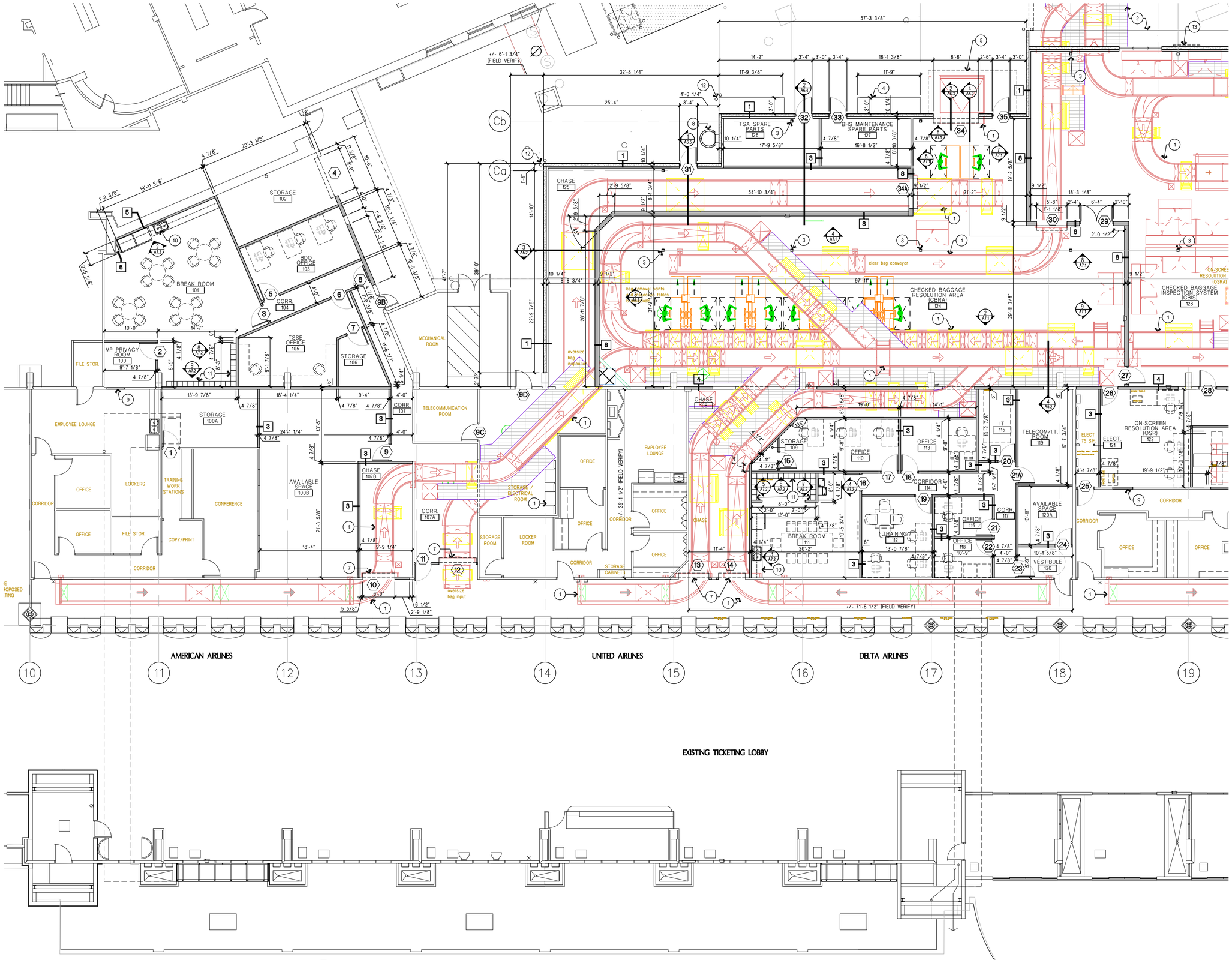

1 REVISED PARTIAL FLOOR PLAN

SCALE 1/8" = 1'-0"

KEYED NOTES

1. BAGGAGE CONVEYOR. SEE "B" SERIES DRAWINGS.
2. SEE DRAWING A2.4 FOR SCOPE OF WORK IN THIS AREA.
3. STEEL TUBE COLUMN. SEE STRUCTURAL DRAWINGS.
4. CONCRETE SIDEWALK/CURB.
5. OVERHEAD CANOPY ABOVE.
6. SEMI-RECESSED FIRE EXTINGUISHER CABINET AND FIRE EXTINGUISHER.
7. OVERHEAD COILING SHUTTER DOOR.
8. ROOF LADDER AND SAFETY CAGE. SEE ROOF PLAN AND DETAILS.
9. NEW WALL CONSTRUCTION INFILL. MATCH EXISTING CONSTRUCTION AND FINISH.
10. MILLWORK.
11. METAL LOCKERS.
12. PAINTED PIPE BOLLARD.
13. FLIGHT INFORMATION DISPLAY SCREEN (FIDS), SEE ELECTRICAL DRAWINGS FOR POWER REQUIREMENTS.
14. RELOCATED ELECTRICAL EQUIPMENT. SEE ELECTRICAL DRAWINGS

LEGEND

1	SEE KEYED NOTES
1	DOOR NUMBER
A	WINDOW TYPE
XX	WALL TYPE

GENERAL NOTES

A. WHERE WALLS ARE SHOWN TO BE REMOVED, PATCH AND REPAIR FLOOR FINISH, WALLS, CEILING AS REQUIRED TO MATCH EXISTING.

B. CONTRACTOR IS RESPONSIBLE FOR PROVIDING PROTECTION OF ALL FINISHES IN EXISTING BUILDING DURING CONSTRUCTION.

C. CONTRACTOR IS RESPONSIBLE FOR REPAIRING ANY DAMAGES AS A RESULT OF NEW CONSTRUCTION.

REFERENCES -- BENCHMARK

DATE	REVISIONS	BY

CONSULTANT'S NAME

mijares • mora
ARCHITECTS INC.
EL PASO, TEXAS 79912
111 N. FESTIVAL
TEL: 915-542-1991
FAX: 542-1994

ARCHITECT'S SEAL

REGISTERED ARCHITECT JORGE L. MORA 12526 STATE OF TEXAS

DATE 5-31-16

SCALE

DATE	MAY 2016
DESIGN BY	MM/BBP
DRAWN BY	S.D.
CHKD. BY	S.D.
APPD. BY	JLM
JOB NO.	1603

PROJECT NAME

EL PASO INTERNATIONAL AIRPORT
CHECKED BAGGAGE INSPECTION SYSTEM

6701 CONVAIR RD. EL PASO, TEXAS

EL PASO INTERNATIONAL AIRPORT

CITY OF EL PASO

SHEET TITLE

REVISED FLOOR PLAN

A2.2

FILE NO. 238512

SHEET___OF___

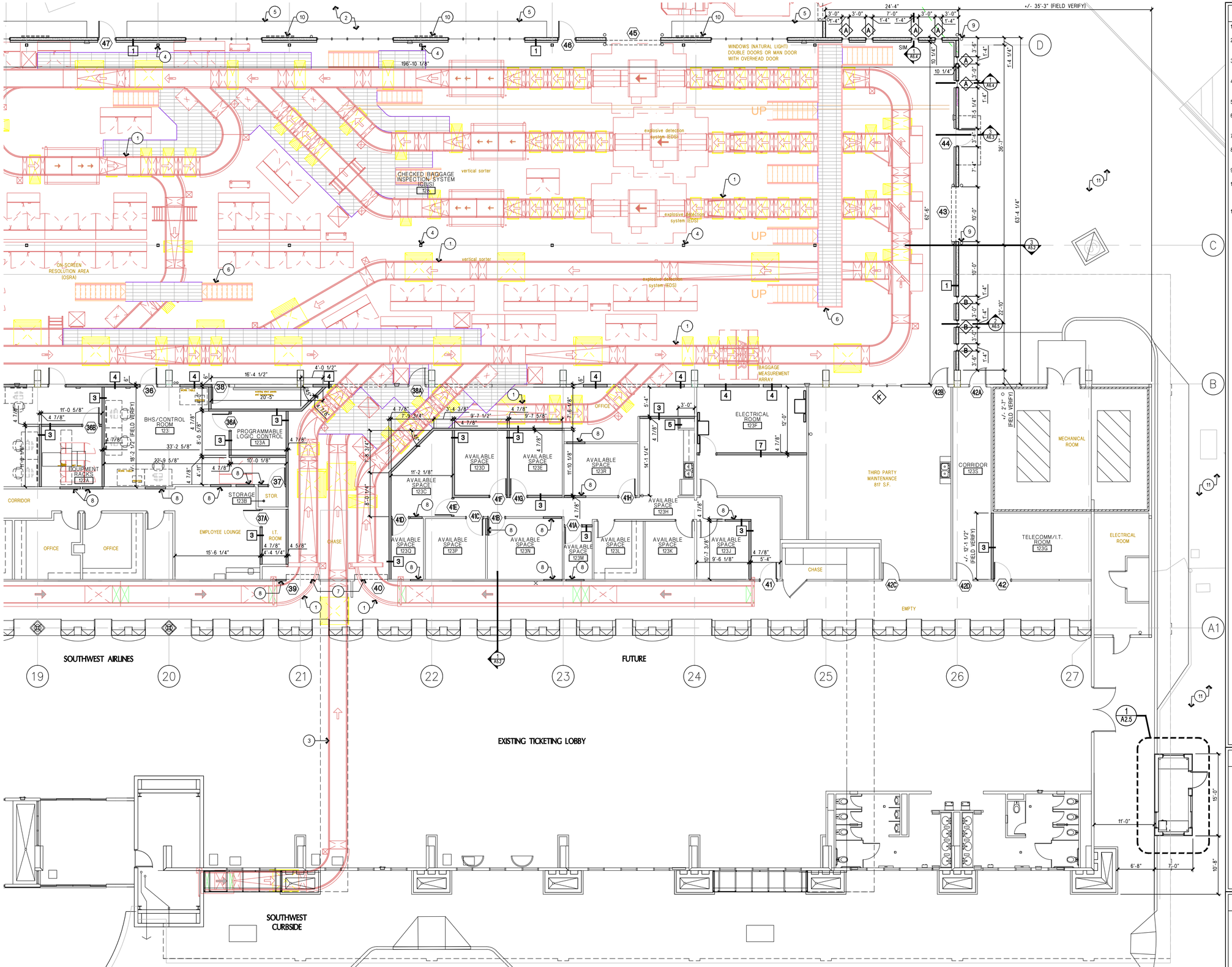

1 REVISED PARTIAL FLOOR PLAN

SCALE 1/8" = 1'-0"

KEYED NOTES

1. BAGGAGE CONVEYOR. SEE "B" SERIES DRAWINGS.
2. SEE DRAWING A2.4 FOR SCOPE OF WORK IN THIS AREA.
3. CURBSIDE/UNDERGROUND CONVEYOR. SEE "B" SERIES DRAWINGS.
4. STEEL TUBE COLUMN. SEE STRUCTURAL DRAWINGS.
5. CONCRETE SIDEWALK/CURB.
6. METAL STAIRS AND CATWALK SYSTEM. SEE "B" SERIES DRAWINGS.
7. OVERHEAD COILING SHUTTER DOOR.
8. NEW WALL CONSTRUCTION INFILL. MATCH EXISTING CONSTRUCTION AND FINISH.
9. PAINTED PIPE BOLLARDS.
10. FLIGHT INFORMATION DISPLAY SCREEN (FIDS), SEE ELECTRICAL DRAWINGS FOR POWER REQUIREMENTS.
11. SEE CIVIL DRAWINGS FOR EXTENT OF NEW WORK IN THIS AREA.

LEGEND

- (1) SEE KEYED NOTES
- (1) DOOR NUMBER
- (A) WINDOW TYPE
- (XX) WALL TYPE

GENERAL NOTES

A. WHERE WALLS ARE SHOWN TO BE REMOVED, PATCH AND REPAIR FLOOR FINISH, WALLS, CEILING AS REQUIRED TO MATCH EXISTING.

B. CONTRACTOR IS RESPONSIBLE FOR PROVIDING PROTECTION OF ALL FINISHES IN EXISTING BUILDING DURING CONSTRUCTION.

C. CONTRACTOR IS RESPONSIBLE FOR REPAIRING ANY DAMAGES AS A RESULT OF NEW CONSTRUCTION.

REFERENCES -- BENCHMARK

DATE	REVISIONS	BY

CONSULTANT'S NAME

mijares ● mora
ARCHITECTS INC.
EL PASO, TEXAS 79912
111 N. FESTIVAL
TEL 915-542-1991
FAX 542-1994

ARCHITECT'S SEAL

REGISTERED ARCHITECT JORGE L. MORA 12526 STATE OF TEXAS
DATE 5-31-16

SCALE

DATE	MAY 2016
DESIGN BY	MM/BP
DRAWN BY	S.D.
CHKD. BY	S.D.
APPD. BY	JLM
JOB NO.	1603

PROJECT NAME

EL PASO INTERNATIONAL AIRPORT
CHECKED BAGGAGE INSPECTION SYSTEM

6701 CONVAIR RD. EL PASO, TEXAS

EL PASO INTERNATIONAL AIRPORT

CITY OF EL PASO

SHEET TITLE

REVISED FLOOR PLAN

A2.3

FILE NO. 238512

SHEET___OF___

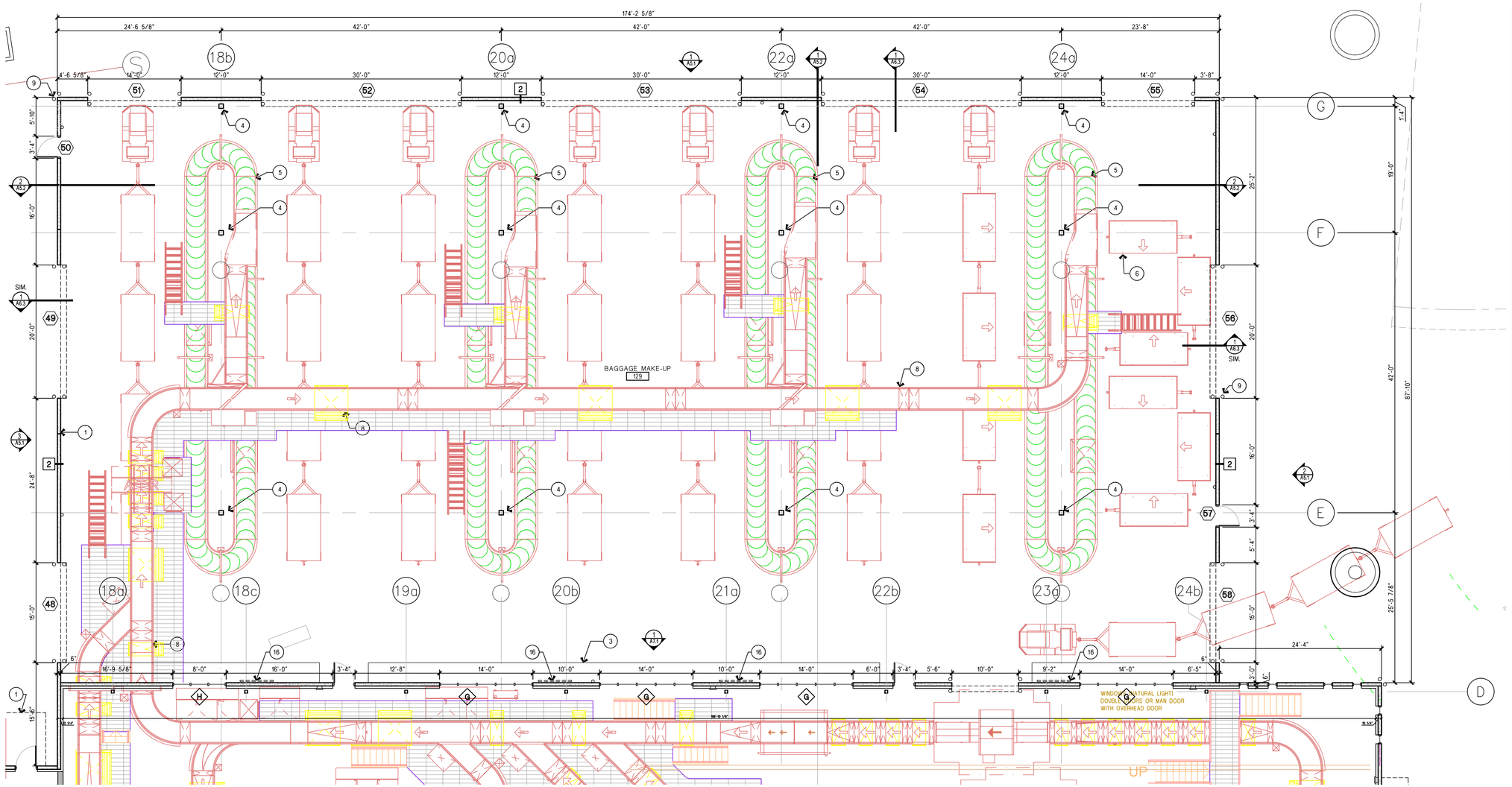

1 REVISED PARTIAL FLOOR PLAN

SCALE 1/8" = 1'-0"

PLAN NORTH

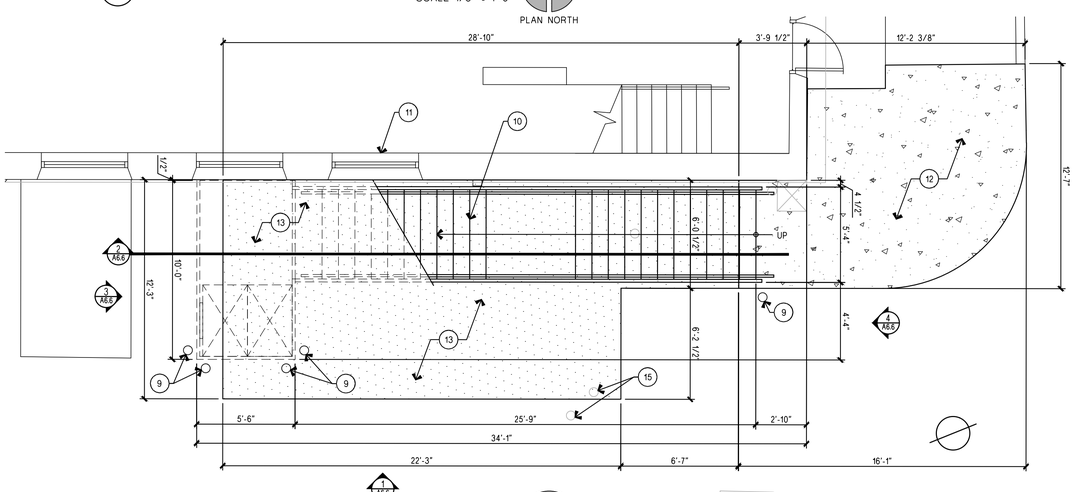

2 STAIR PLAN - GROUND FLOOR

SCALE 1/4" = 1'-0"

PLAN NORTH

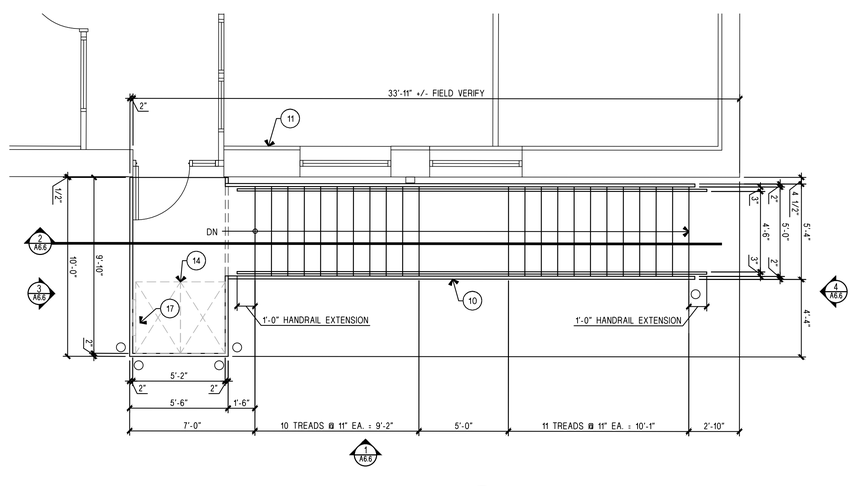

3 STAIR PLAN - SECOND FLOOR

SCALE 1/4" = 1'-0"

PLAN NORTH

KEYED NOTES

1. OVERHEAD CANOPY ABOVE.
2. PRE-FABRICATED CONCRETE BARRIER TO MATCH EXISTING.
3. CONCRETE CURB.
4. STEEL COLUMN. SEE STRUCTURAL DRAWINGS.
5. BAGGAGE MAKE-UP DEVICE. SEE "B" SERIES DRAWINGS.
6. BAGGAGE DISTRIBUTION CARTS.
7. STEEL COLUMN. SEE STRUCTURAL DRAWINGS.
8. BAGGAGE CONVEYOR. SEE "B" SERIES DRAWINGS.
9. PAINTED PIPE BOLLARDS.
10. METAL STAIR, REFER TO STRUCTURAL DRAWINGS.
11. EXISTING BUILDING TO REMAIN.
12. NEW CONCRETE WALK TO MATCH EXISTING, REFER TO CIVIL DRAWINGS.
13. NEW ASPHALT PAVEMENT TO MATCH EXISTING, REFER TO CIVIL DRAWINGS.
14. DASHED LINE INDICATES AREA OF RESCUE ASSISTANCE (30"x48" EA.)
15. EXISTING PIPE BOLLARDS TO BE REMOVED AND PATCH TO MATCH EXISTING.
16. FLIGHT INFORMATION DISPLAY SCREEN (FIDS), SEE ELECTRICAL DRAWINGS FOR POWER REQUIREMENTS.
17. REINSTALLED AREA OF RESCUE ASSISTANCE COMMUNICATIONS PANEL.

LEGEND

- (1) SEE KEYED NOTES
- (1) DOOR NUMBER
- (A) WINDOW TYPE
- (XX) WALL TYPE

GENERAL NOTES

A. WHERE WALLS ARE SHOWN TO BE REMOVED, PATCH AND REPAIR FLOOR FINISH, WALLS, CEILING AS REQUIRED TO MATCH EXISTING.

B. CONTRACTOR IS RESPONSIBLE FOR PROVIDING PROTECTION OF ALL FINISHES IN EXISTING BUILDING DURING CONSTRUCTION.

C. CONTRACTOR IS RESPONSIBLE FOR REPAIRING ANY DAMAGES AS A RESULT OF NEW CONSTRUCTION.

REFERENCES -- BENCHMARK

DATE	REVISIONS	BY

CONSULTANT'S NAME

mijares ● mora
ARCHITECTS INC.
EL PASO, TEXAS 79912
FAX: 542-7994
111 N. FESTIVAL
TEL: 915-542-1991

ARCHITECT'S SEAL

REGISTERED ARCHITECT
JORGE L. MORA
12526
STATE OF TEXAS
DATE 5-31-16

SCALE

DATE	MAY 2016
DESIGN BY	MM/JRP
DRAWN BY	S.D.
CHKD. BY	S.D.
APPD. BY	JLM
JOB NO.	1603

PROJECT NAME

EL PASO INTERNATIONAL AIRPORT
CHECKED BAGGAGE INSPECTION SYSTEM

6701 CONVAIR RD. EL PASO, TEXAS

EL PASO INTERNATIONAL AIRPORT

CITY OF EL PASO

SHEET TITLE

REVISED FLOOR PLAN

A2.4

FILE NO. 238512

SHEET___OF___

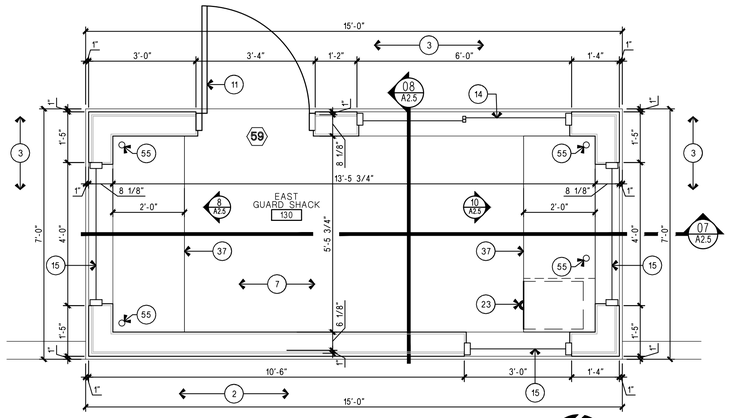

1 GUARD SHACK FLOOR PLAN

SCALE: 1/2" = 1'-0"

NORTH

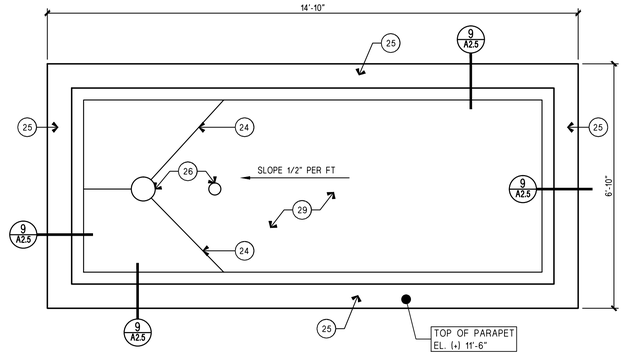

2 GUARD SHACK ROOF PLAN

SCALE: 1/2" = 1'-0"

NORTH

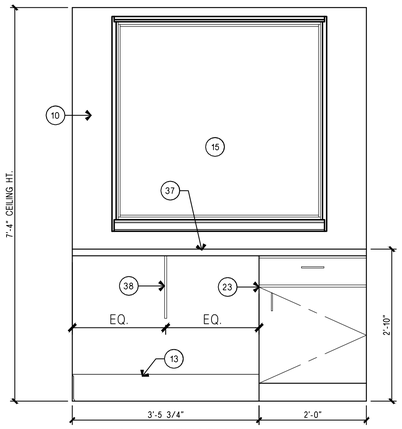

10 INTERIOR ELEVATION

SCALE: 3/4"=1'-0"

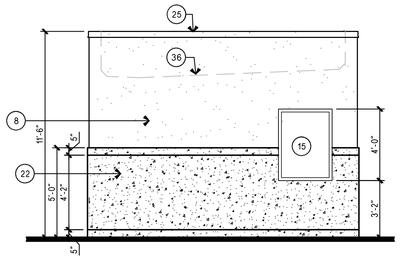

3 WEST ELEVATION

SCALE: 1/4" = 1'-0"

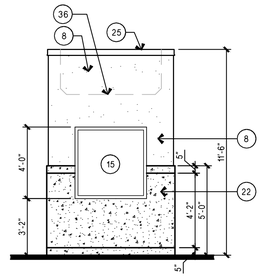

4 SOUTH ELEVATION

SCALE: 1/4" = 1'-0"

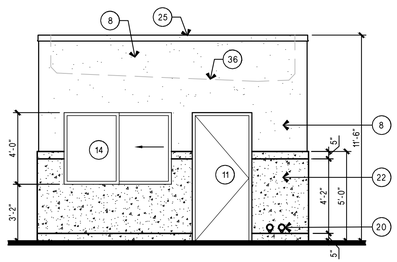

5 EAST ELEVATION

SCALE: 1/4" = 1'-0"

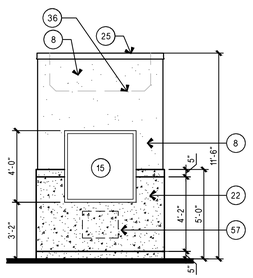

6 NORTH ELEVATION

SCALE: 1/4" = 1'-0"

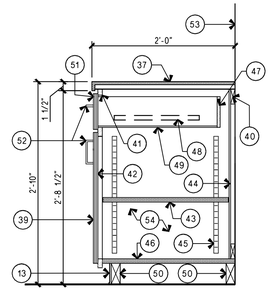

11 MILLWORK SECTION

SCALE: 1"=1'-0"

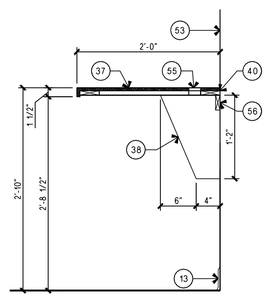

12 MILLWORK SECTION

SCALE: 1"=1'-0"

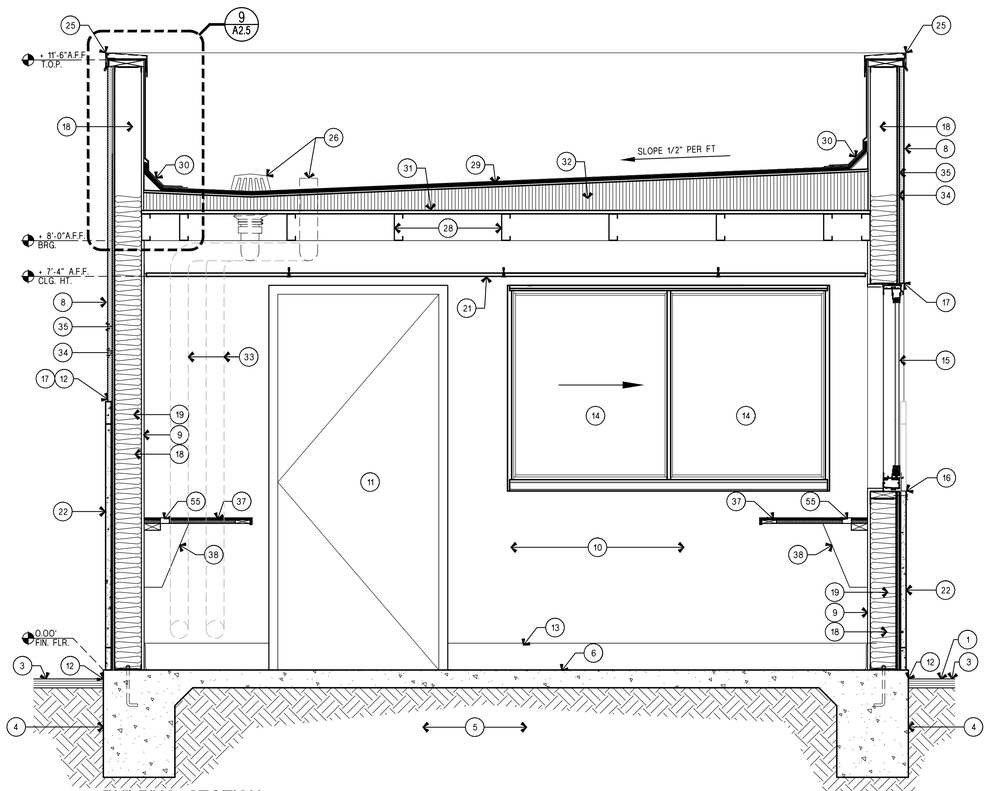

7 BUILDING SECTION

SCALE: 3/4"=1'-0"

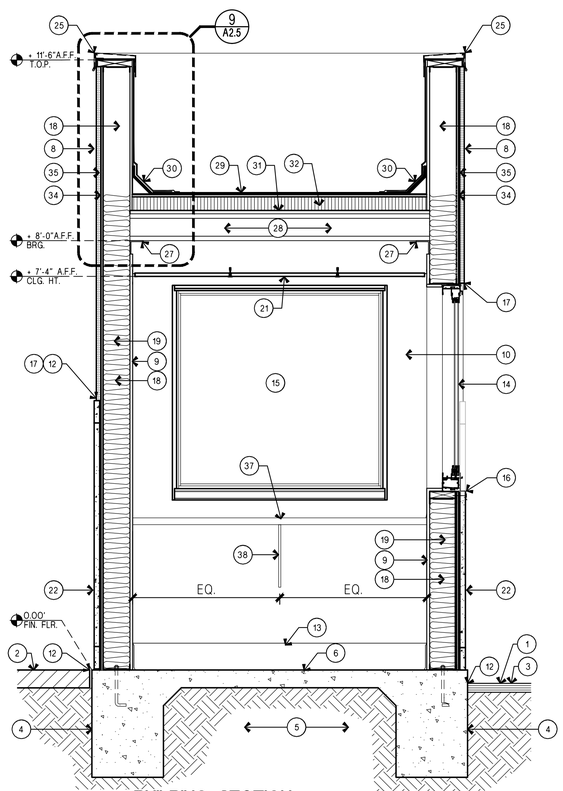

8 BUILDING SECTION

SCALE: 3/4"=1'-0"

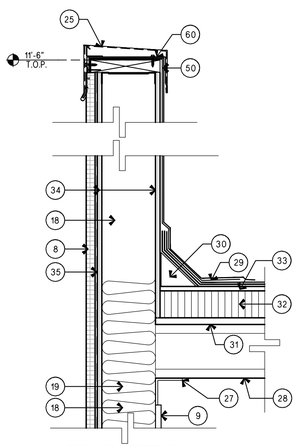

9 ROOF DETAIL

SCALE: 1-1/2" = 1'-0"

KEYED NOTES

1. FINISH GRADE - REFER TO CIVIL DRAWINGS.
2. EXISTING WALK TO REMAIN.
3. EXISTING PAVING TO REMAIN.
4. CONCRETE FOOTING - REFER TO STRUCTURAL DRAWINGS.
5. SUBGRADE - REFER TO CIVIL DRAWINGS.
6. CONCRETE SLAB - REFER TO STRUCTURAL DRAWINGS.
7. FLOOR FINISH AS SCHEDULED.
8. E.I.F.S. AS SPECIFIED.
9. 5/8" GYPSUM BOARD AS SPECIFIED.
10. WALL FINISH AS SCHEDULED.
11. 3'-0" WIDE x 7'-0" HIGH HOLLOW METAL DOOR AND FRAME PAINTED, HARDWARE SET AS SPECIFIED.
12. SEALANT AS SPECIFIED.
13. VINYL BASE AS SPECIFIED.
14. HORIZONTAL SLIDING WINDOW WITH 1" INSULATED CLEAR GLASS EQUAL TO KAWNEER MODEL 8470TL ISOLOCK.
15. FIXED WINDOW WITH 1" INSULATED CLEAR GLASS EQUAL TO KAWNEER MODEL 8410TL ISOLOCK.
16. ALUMINUM SILL FLASHING WITH END DAMS AT BOTH ENDS AS SPECIFIED TO MATCH WINDOW FRAME.
17. ALUMINUM FLASHING AS SPECIFIED TO MATCH WINDOW FRAME.
18. 6" MTL. STUDS, REFER TO STRUCTURAL DRAWINGS.
19. BATT INSULATION AS SPECIFIED.
20. ROOF DRAIN AND OVER FLOW PIPES NOZZLES.
21. 2'x4' LAY-IN CEILING SYSTEM AS SPECIFIED.
22. GRANITE VENEER - OWNER PROVIDED, CONTRACTOR INSTALLED.
23. MILLWORK - SEE DETAIL 11/A2.5
24. TAPERED INSULATION CRICKET.
25. COPPER COPING WITH PATINA FINISH TO MATCH EXISTING.
26. ROOF DRAIN AND OVERFLOW SYSTEM, REFER TO PLUMBING DRAWINGS.
27. STEEL ANGLE - REFER TO STRUCTURAL DRAWINGS.
28. STEEL CHANNEL - REFER TO STRUCTURAL.
29. ROOFING SYSTEM AS SPECIFIED.
30. 4" CANT STRIP AS SPECIFIED.
31. 3/4" ROOF DECK - REFER TO STRUCTURAL DRAWINGS.
32. RIGID INSULATION AS SPECIFIED.
33. ROOF DRAIN AND OVER FLOW LEADER PIPES, REFER TO PLUMBING DRAWINGS.
34. 1/2" EXTERIOR GRADE SHEATHING AS SPECIFIED.
35. AIR AND WATER RESISTIVE BARRIER AS SPECIFIED.
36. ROOF LINE.
37. 3/4" COUNTERTOP WITH PLASTIC LAMINATE FINISH AS SPECIFIED, SEE DETAIL 12/A2.5
38. 3/4" SUPPORT PANEL WITH PLASTIC LAMINATE FINISH.
39. 3/4" DOOR.
40. 3/4" X 2 1/2" SOLID WOOD WEB FRAME.
41. 3/4" STOP FRAME.
42. LINE OF STOP FRAME.
43. 3/4" SHELVES.
44. 1/4" BACK.
45. RECESSED SHELF STANDARDS AND SUPPORTS.
46. 3/4" BOTTOM.
47. 1/2" DRAWER BACK.
48. DRAWER SLIDES - DOUBLE ROLLER SELF CLOSING W/ FULL EXTENSIONS.
49. 1/2 DRAWER BOTTOM.
50. CONTINUOUS 2 X WOOD BLOCKING.
51. 3/4" DRAWER FRONT.
52. DOORS AND DRAWERS - ALUMINUM PULLS (TYP.)
53. FACE OF WALL.
54. 3/4" END WITH PLASTIC LAMINATE.
55. 2" DIAMETER GROMMET.
56. 3/4" X 2 1/2" SOLID WOOD BLOCKING.
57. MECHANICAL UNIT, SEE MECHANICAL DRAWINGS.

LEGEND

(1)	SEE KEYED NOTES
1	DOOR NUMBER
A	WINDOW TYPE
XX	WALL TYPE

GENERAL NOTES

A. CONTRACTOR IS RESPONSIBLE FOR PROVIDING PROTECTION OF ALL FINISHES AT EXISTING BUILDING DURING CONSTRUCTION.

B. CONTRACTOR IS RESPONSIBLE FOR REPAIRING ANY DAMAGES TO EXISTING BUILDING AS A RESULT OF NEW CONSTRUCTION.

C. WHEREVER SIDEWALK ABUTS ROCK OR MASONRY STRUCTURES SUCH AS CURBS OR BUILDINGS, EXPANSION JOINT FILLER & SEALANT SHALL BE PLACED IN ACCORDANCE WITH STANDARD SPECIFICATIONS.

D. ALL TRAFFIC SIGNAGE SHALL COMPLY WITH TEXAS DEPARTMENT OF TRANSPORTATION STANDARDS.

REFERENCES -- BENCHMARK

DATE	REVISIONS	BY

CONSULTANT'S NAME

mijares ● mora
ARCHITECTS INC.
EL PASO, TEXAS 79912
111 N. FESTIVAL
TEL: 915-542-1991
FAX: 542-1994

ARCHITECT'S SEAL

REGISTERED ARCHITECT JORGE L. MORA 12526 STATE OF TEXAS
DATE 5-31-16

SCALE

DATE	MAY 2016
DESIGN BY	MM/RMP
DRAWN BY	S.D.
CHKD. BY	S.D.
APPD. BY	JLM
JOB NO.	1603

PROJECT NAME

EL PASO INTERNATIONAL AIRPORT
CHECKED BAGGAGE INSPECTION SYSTEM
6701 CONVAIR RD. EL PASO, TEXAS

EL PASO INTERNATIONAL AIRPORT

CITY OF EL PASO

SHEET TITLE

GUARD SHACK DETAILS

A2.5

FILE NO. 238512

SHEET__OF__

SCHEDULE OF FINISHES

NO.	NAME	FLOOR 1 SEALED CONCRETE	FLOOR 2 CARPET	FLOOR 3 LVT	FLOOR 4 ANTI-FATIGUE RUBBER FLOORING	BASE 1 VINYL BASE	BASE 2	BASE 3	BASE 4	BASE 5	WALLS 1 GYPSUM BOARD - PAINTED CONCRETE - PAINTED N	WALLS 2 E	WALLS 3 S	WALLS 4 W	WALLS 5	WALLS 6	WALLS 7	WALLS 8	WALLS 9	CEILINGS 1 ACOUSTICAL LAY-IN GYPSUM BOARD - PAINTED TECTUM PANELS - PAINTED EXP. STRUCTURE PAINTED	CEILINGS 2	CEILINGS 3	CEILINGS 4	CEILINGS 5	CEILINGS 6	CEILINGS 7	CLG. HT.	REMARKS
100	MP PRIVACY ROOM			3		1					1	1	1	1						1							9'-0"	
100A	STORAGE	1				1					1	1	1	1						1							9'-0"	
100B	AVAILABLE SPACE			3		1					1	1	1	1						1							9'-0"	
101	BREAK ROOM			3		1					1	1	1	1						1							9'-0"	
102	STORAGE	1				1					1	1	1	1						1							9'-0"	
103	BDO OFFICE		2			1					1	1	1	1						1							9'-0"	
104	CORRIDOR			3		1					1	1	1	1						1							9'-0"	
105	TSSE OFFICE		2			1					1	1	1	1						1							9'-0"	
106	STORAGE			3		1					1	1	1	1						1							9'-0"	
107	CORRIDOR			3		1					1	1	1	1						1							9'-0"	
107A	CORRIDOR			3		1					1	1	1	1						1							9'-0"	
107B	CHASE	1				1					1	1	1	1									4					EXPOSED STRUCTURE
108	CHASE	1				1					1	1	1	1									4					EXPOSED STRUCTURE
109	STORAGE			3		1					1	1	1	1						1							9'-0"	
110	OFFICE		2			1					1	1	1	1						1							9'-0"	
111	BREAK ROOM			3		1					1	1	1	1						1							9'-0"	
112	TRAINING		2			1					1	1	1	1						1							9'-0"	
113	OFFICE		2			1					1	1	1	1						1							9'-0"	
114	CORRIDOR			3		1					1	1	1	1						1							9'-0"	
115	I.T.			3		1					1	1	1	1						1							9'-0"	
116	OFFICE		2			1					1	1	1	1						1							9'-0"	
117	CORRIDOR			3		1					1	1	1	1						1							9'-0"	
118	OFFICE		2			1					1	1	1	1						1							9'-0"	
119	TELECOMM/I.T. ROOM			3		1					1	1	1	1						1							9'-0"	
120	VESTIBULE			3		1					1	1	1	1						1							9'-0"	
120A	AVAILABLE SPACE			3		1					1	1	1	1						1							9'-0"	
121	ELECTRICAL ROOM	1				1					1	1	1	1						1							9'-0"	
122	ON-SCREEN RESOLUTION AREA		2			1					1	1	1	1						1							9'-0"	
122A	EQUIPMENT RACKS			3		1					1	1	1	1						1							9'-0"	
123	BAGGAGE HANDLING SYSTEM/CONTROL RM. (BHS)		2			1					1	1	1	1						1							9'-0"	
123A	PROGRAMMABLE LOGIC CONTROL			3		1					1	1	1	1						1							9'-0"	
123B	STORAGE			3		1					1	1	1	1						1							9'-0"	
123C	AVAILABLE SPACE			3		1					1	1	1	1						1							9'-0"	
123D	AVAILABLE SPACE			3		1					1	1	1	1						1							9'-0"	
123E	AVAILABLE SPACE			3		1					1	1	1	1						1							9'-0"	
123F	ELECTRICAL ROOM	1				1					1	1	1	1						1							9'-0"	
123G	TELECOMM/I.T.			3		1					1	1	1	1						1							9'-0"	
123H	AVAILABLE SPACE			3		1					1	1	1	1						1							9'-0"	
123J	AVAILABLE SPACE			3		1					1	1	1	1						1							9'-0"	
123K	AVAILABLE SPACE			3		1					1	1	1	1						1							9'-0"	
123L	AVAILABLE SPACE			3		1					1	1	1	1						1							9'-0"	
123M	AVAILABLE SPACE			3		1					1	1	1	1						1							9'-0"	
123N	AVAILABLE SPACE			3		1					1	1	1	1						1							9'-0"	
123P	AVAILABLE SPACE			3		1					1	1	1	1						1							9'-0"	
123Q	AVAILABLE SPACE			3		1					1	1	1	1						1							9'-0"	
123R	AVAILABLE SPACE			3		1					1	1	1	1						1							9'-0"	
123S	CORRIDOR			3		1					1	1	1	1						1							9'-0"	SEE KEYED NOTE NO. 5
124	CHECKED BAGGAGE RESOLUTION AREA (CBRA)				4	1					1	1	1	1								3					14'-0"	SEE KEYED NOTE NO. 4
125	CHASE	1				1					1	1	1	1									4					EXPOSED STRUCTURE
126	TSA SPARE PARTS	1				1					1	1	1	1						2							9'-0"	
127	BHS MAINTENANCE SPARE PARTS	1				1					1	1	1	1						2							9'-0"	
128	CHECKED BAGGAGE INSPECTION SYSTEM (CBIS)	1				1					1	1	1	1									4					EXPOSED STRUCTURE
129	BAGGAGE MAKE-UP AREA	1				-					2	2	2	2									4					EXPOSED STRUCTURE
130	EAST GUARD SHACK			3		1					1	1	1	1						1							7'-4"	

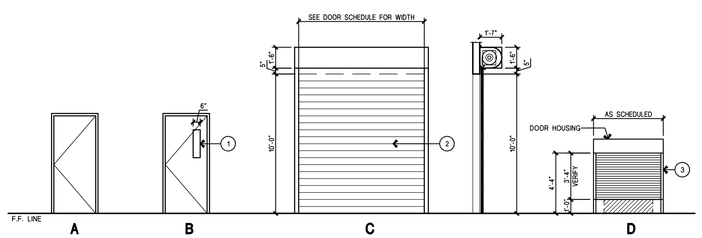

1 DOOR TYPES

SCALE: 1/4" = 1'-0"

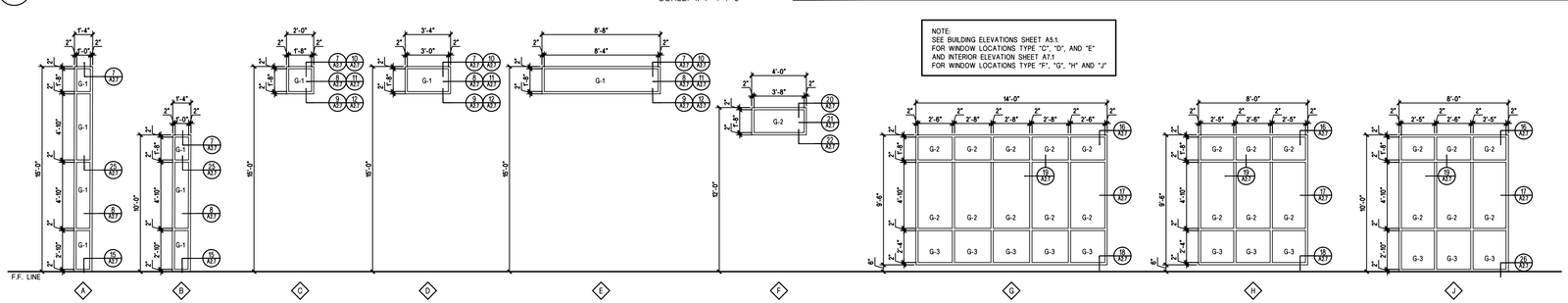

2 WINDOW TYPES

SCALE: 1/4" = 1'-0"

DOOR SCHEDULE

MARK	ROOM	SIZE W	SIZE H	SIZE THK	TYPE	DOOR MATERIAL	GLASS	DOOR FINISH	FRAME MATERIAL	FRAME FINISH	DETAILS HEAD	DETAILS JAMB	DETAILS JAMB	DETAILS THRES.	HDW. SET	FIRE RATING	REMARKS
1	-	3'-0" X 7'-0" X 1-3/4"			A	S.C. WOOD		PAINT	H.M.	PAINT	3/A2.7	4/A2.7	4/A2.7		6		
2		3'-0" X 7'-0" X 1-3/4"			B	S.C. WOOD		PAINT	H.M.	PAINT	3/A2.7	4/A2.7	4/A2.7		8		
3		3'-0" X 7'-0" X 1-3/4"			B	S.C. WOOD		PAINT	H.M.	PAINT	3/A2.7	4/A2.7	4/A2.7		9		
4		8'-0" X 10'-0"			C	STEEL		FAC-P	STEEL	FAC-P	13/A2.7	14/A2.7	14/A2.7		1		
5		3'-0" X 7'-0" X 1-3/4"			B	S.C. WOOD		PAINT	H.M.	PAINT	3/A2.7	4/A2.7	4/A2.7		3		PROVIDE ACCESS CONTROL INTERFACE
6		3'-0" X 7'-0" X 1-3/4"			B	S.C. WOOD		PAINT	H.M.	PAINT	3/A2.7	4/A2.7	4/A2.7		8		
7		3'-0" X 7'-0" X 1-3/4"			B	S.C. WOOD		PAINT	H.M.	PAINT	3/A2.7	4/A2.7	4/A2.7		6		
8		3'-0" X 7'-0" X 1-3/4"			B	S.C. WOOD		PAINT	H.M.	PAINT	3/A2.7	4/A2.7	4/A2.7		3		PROVIDE ACCESS CONTROL INTERFACE
9		3'-0" X 7'-0" X 1-3/4"			B	S.C. WOOD		PAINT	H.M.	PAINT	3/A2.7	4/A2.7	4/A2.7		3		PROVIDE ACCESS CONTROL INTERFACE
9A		NOT USED															
9B		EXISTING													2		PROVIDE ACCESS CONTROL INTERFACE
9C		EXISTING													2		PROVIDE ACCESS CONTROL INTERFACE
9D		EXISTING													2		PROVIDE ACCESS CONTROL INTERFACE
10		6'-0" X 4'-4"			D	STEEL		FAC-P	STEEL	FAC-P	2/A2.8	6/A2.8	6/A2.8		1	1 HR	PROVIDE ACCESS CONTROL INTERFACE
11		3'-0" X 7'-0" X 1-3/4"			A	S.C. WOOD		PAINT	H.M.	PAINT	3/A2.7	4/A2.7	4/A2.7		3		PROVIDE ACCESS CONTROL INTERFACE
12		7'-0" X 4'-4"			D	STEEL		FAC-P	STEEL	FAC-P	2/A2.8	6/A2.8	6/A2.8		1	1 HR	PROVIDE ACCESS CONTROL INTERFACE
13		6'-0" X 4'-4"			D	STEEL		FAC-P	STEEL	FAC-P	2/A2.8	6/A2.8	6/A2.8		1	1 HR	PROVIDE ACCESS CONTROL INTERFACE
14		6'-0" X 4'-4"			D	STEEL		FAC-P	STEEL	FAC-P	2/A2.8	6/A2.8	6/A2.8		1	1 HR	PROVIDE ACCESS CONTROL INTERFACE
15		3'-0" X 7'-0" X 1-3/4"			A	S.C. WOOD		PAINT	H.M.	PAINT	3/A2.7	4/A2.7	4/A2.7		7		
16		3'-0" X 7'-0" X 1-3/4"			B	S.C. WOOD		PAINT	H.M.	PAINT	3/A2.7	4/A2.7	4/A2.7		9		
17		3'-0" X 7'-0" X 1-3/4"			B	S.C. WOOD		PAINT	H.M.	PAINT	3/A2.7	4/A2.7	4/A2.7		8		
18		3'-0" X 7'-0" X 1-3/4"			B	S.C. WOOD		PAINT	H.M.	PAINT	3/A2.7	4/A2.7	4/A2.7		8		
19		3'-0" X 7'-0" X 1-3/4"			B	S.C. WOOD		PAINT	H.M.	PAINT	3/A2.7	4/A2.7	4/A2.7		8		
20		3'-0" X 7'-0" X 1-3/4"			B	S.C. WOOD		PAINT	H.M.	PAINT	3/A2.7	4/A2.7	4/A2.7		6		
21		3'-0" X 7'-0" X 1-3/4"			B	S.C. WOOD		PAINT	H.M.	PAINT	3/A2.7	4/A2.7	4/A2.7		8		
21A		3'-0" X 7'-0" X 1-3/4"						PAINT		PAINT	3/A2.7	4/A2.7	4/A2.7		3		PROVIDE ACCESS CONTROL INTERFACE
22		3'-0" X 7'-0" X 1-3/4"			B	S.C. WOOD		PAINT	H.M.	PAINT	3/A2.7	4/A2.7	4/A2.7		8		
23		3'-0" X 7'-0" X 1-3/4"			B	S.C. WOOD		PAINT	H.M.	PAINT	3/A2.7	4/A2.7	4/A2.7		3		PROVIDE ACCESS CONTROL INTERFACE
24		3'-0" X 7'-0" X 1-3/4"			B	S.C. WOOD		PAINT	H.M.	PAINT	3/A2.7	4/A2.7	4/A2.7		3		PROVIDE ACCESS CONTROL INTERFACE
25		3'-0" X 7'-0" X 1-3/4"			A	S.C. WOOD		PAINT	H.M.	PAINT	3/A2.7	4/A2.7	4/A2.7		6		
26		3'-0" X 7'-0" X 1-3/4"			B	H.M.		PAINT	H.M.	PAINT	3/A2.7	4/A2.7	4/A2.7		3		PROVIDE ACCESS CONTROL INTERFACE
27		3'-0" X 7'-0" X 1-3/4"			B	H.M.		PAINT	H.M.	PAINT	9/A2.8	10/A2.8	10/A2.8		3		PROVIDE ACCESS CONTROL INTERFACE
28		3'-0" X 7'-0" X 1-3/4"			B	H.M.		PAINT	H.M.	PAINT	3/A2.7	4/A2.7	4/A2.7		3		PROVIDE ACCESS CONTROL INTERFACE
29		2-3'-0" X 7'-0" X 1-3/4"			B	H.M.		PAINT	H.M.	PAINT	9/A2.8	10/A2.8	10/A2.8		5		PROVIDE ACCESS CONTROL INTERFACE
30		6'-0" X 4'-4"			D	STEEL		FAC-P	STEEL	FAC-P	4/A2.8	8/A2.8	8/A2.8		1		
31		3'-0" X 7'-0" X 1-3/4"			A	H.M.		PAINT	H.M.	PAINT	1/A2.7	2/A2.7	2/A2.7	6/A2.7	4		PROVIDE ACCESS CONTROL INTERFACE
32		3'-0" X 7'-0" X 1-3/4"			A	H.M.		PAINT	H.M.	PAINT	1/A2.7	2/A2.7	2/A2.7	6/A2.7	4		PROVIDE ACCESS CONTROL INTERFACE
33		3'-0" X 7'-0" X 1-3/4"			A	H.M.		PAINT	H.M.	PAINT	1/A2.7	2/A2.7	2/A2.7	6/A2.7	4		PROVIDE ACCESS CONTROL INTERFACE
34		9'-0" X 4'-4"			D	STEEL		FAC-P	STEEL	FAC-P	3/A2.8	7/A2.8	7/A2.8		1		PROVIDE ACCESS CONTROL INTERFACE
34A		9'-0" X 4'-4"			D	STEEL		FAC-P	STEEL	FAC-P	4/A2.8	8/A2.8	8/A2.8		1	1 HR	
35		3'-0" X 7'-0" X 1-3/4"			A	H.M.		PAINT	H.M.	PAINT	1/A2.7	2/A2.7	2/A2.7	6/A2.7	4		PROVIDE ACCESS CONTROL INTERFACE
36		3'-0" X 7'-0" X 1-3/4"			B	H.M.		PAINT	H.M.	PAINT	3/A2.7	4/A2.7	4/A2.7		3		PROVIDE ACCESS CONTROL INTERFACE
36A		3'-0" X 7'-0" X 1-3/4"			A	S.C. WOOD		PAINT	H.M.	PAINT	3/A2.7	4/A2.7	4/A2.7		8		
36B		3'-0" X 7'-0" X 1-3/4"			A	S.C. WOOD		PAINT	H.M.	PAINT	3/A2.7	4/A2.7	4/A2.7		6		
37		3'-0" X 7'-0" X 1-3/4"			A	S.C. WOOD		PAINT	H.M.	PAINT	3/A2.7	4/A2.7	4/A2.7		7		
37A		3'-0" X 7'-0" X 1-3/4"			A	S.C. WOOD		PAINT	H.M.	PAINT	3/A2.7	4/A2.7	4/A2.7		3		REUSE TENANT ACCESS CONTROL HARDWARE
38		3'-0" X 7'-0" X 1-3/4"			A	H.M.		PAINT	H.M.	PAINT	3/A2.7	4/A2.7	4/A2.7		3		PROVIDE ACCESS CONTROL INTERFACE
38A		EXISTING													2		PROVIDE ACCESS CONTROL INTERFACE
39		6'-0" X 4'-4"			D	STEEL		FAC-P	STEEL	FAC-P	2/A2.8	6/A2.8	6/A2.8		1	1 HR	PROVIDE ACCESS CONTROL INTERFACE
40		6'-0" X 4'-4"			D	STEEL		FAC-P	STEEL	FAC-P	2/A2.8	6/A2.8	6/A2.8		1	1 HR	PROVIDE ACCESS CONTROL INTERFACE
41		3'-0" X 7'-0" X 1-3/4"			B	S.C. WOOD		PAINT	H.M.	PAINT	3/A2.7	4/A2.7	4/A2.7		3		PROVIDE ACCESS CONTROL INTERFACE
41A		3'-0" X 7'-0" X 1-3/4"			A	S.C. WOOD		PAINT	H.M.	PAINT	3/A2.7	4/A2.7	4/A2.7		7		
41B		3'-0" X 7'-0" X 1-3/4"			B	S.C. WOOD		PAINT	H.M.	PAINT	3/A2.7	4/A2.7	4/A2.7		8		
41C		3'-0" X 7'-0" X 1-3/4"			B	S.C. WOOD		PAINT	H.M.	PAINT	3/A2.7	4/A2.7	4/A2.7		8		
41D		3'-0" X 7'-0" X 1-3/4"			A	S.C. WOOD		PAINT	H.M.	PAINT	3/A2.7	4/A2.7	4/A2.7		7		
41E		3'-0" X 7'-0" X 1-3/4"			B	S.C. WOOD		PAINT	H.M.	PAINT	3/A2.7	4/A2.7	4/A2.7		8		
41F		3'-0" X 7'-0" X 1-3/4"			B	S.C. WOOD		PAINT	H.M.	PAINT	3/A2.7	4/A2.7	4/A2.7		8		
41G		3'-0" X 7'-0" X 1-3/4"			B	S.C. WOOD		PAINT	H.M.	PAINT	3/A2.7	4/A2.7	4/A2.7		8		
41H		3'-0" X 7'-0" X 1-3/4"			B	S.C. WOOD		PAINT	H.M.	PAINT	3/A2.7	4/A2.7	4/A2.7		8		
42		3'-0" X 7'-0" X 1-3/4"			A	S.C. WOOD		PAINT	H.M.	PAINT	3/A2.7	4/A2.7	4/A2.7		3		PROVIDE ACCESS CONTROL INTERFACE
42A		EXISTING													2		PROVIDE ACCESS CONTROL INTERFACE
42B		EXISTING													2		PROVIDE ACCESS CONTROL INTERFACE
42C		EXISTING													2		PROVIDE ACCESS CONTROL INTERFACE
42D		EXISTING													2		PROVIDE ACCESS CONTROL INTERFACE
43		10'-0" X 10'-0"			C	STEEL		FAC-P	STEEL	FAC-P	13/A2.7	14/A2.7	14/A2.7		1		PROVIDE ACCESS CONTROL INTERFACE
44		3'-0" X 7'-0" X 1-3/4"			A	H.M.		PAINT	H.M.	PAINT	1/A2.7	2/A2.7	2/A2.7	6/A2.7	4		PROVIDE ACCESS CONTROL INTERFACE
45		10'-0" X 10'-0"			C	STEEL		FAC-P	STEEL	FAC-P	13/A2.7	14/A2.7	14/A2.7		1		ELECTRIC OPERATOR, SEE ELECTRICAL
46		3'-0" X 7'-0" X 1-3/4"			B	H.M.		PAINT	H.M.	PAINT	1/A2.7	2/A2.7	2/A2.7		4		PROVIDE ACCESS CONTROL INTERFACE
47		3'-0" X 7'-0" X 1-3/4"			B	H.M.		PAINT	H.M.	PAINT	1/A2.7	2/A2.7	2/A2.7		4		PROVIDE ACCESS CONTROL INTERFACE
48		15'-0" X 10'-0"			C	STEEL		FAC-P	STEEL	FAC-P	13/A2.7	14/A2.7	14/A2.7		1		ELECTRIC OPERATOR, SEE ELECTRICAL
49		20'-0" X 10'-0"			C	STEEL		FAC-P	STEEL	FAC-P	13/A2.7	14/A2.7	14/A2.7		1		ELECTRIC OPERATOR, SEE ELECTRICAL
50		3'-0" X 7'-0" X 1-3/4"			A	H.M.		PAINT	H.M.	PAINT	23/A2.7	24/A2.7	24/A2.7	6/A2.7	11		
51		13'-0" X 10'-0"			C	STEEL		FAC-P	STEEL	FAC-P	13/A2.7	14/A2.7	14/A2.7		1		ELECTRIC OPERATOR, SEE ELECTRICAL
52		30'-0" X 10'-0"			C	STEEL		FAC-P	STEEL	FAC-P	13/A2.7	14/A2.7	14/A2.7		1		ELECTRIC OPERATOR, SEE ELECTRICAL
53		30'-0" X 10'-0"			C	STEEL		FAC-P	STEEL	FAC-P	13/A2.7	14/A2.7	14/A2.7		1		ELECTRIC OPERATOR, SEE ELECTRICAL
54		30'-0" X 10'-0"			C	STEEL		FAC-P	STEEL	FAC-P	13/A2.7	14/A2.7	14/A2.7		1		ELECTRIC OPERATOR, SEE ELECTRICAL
55		14'-0" X 10'-0"			C	STEEL		FAC-P	STEEL	FAC-P	13/A2.7	14/A2.7	14/A2.7		1		ELECTRIC OPERATOR, SEE ELECTRICAL
56		20'-0" X 10'-0"			C	STEEL		FAC-P	STEEL	FAC-P	13/A2.7	14/A2.7	14/A2.7		1		ELECTRIC OPERATOR, SEE ELECTRICAL
57		3'-0" X 7'-0" X 1-3/4"			A	H.M.		PAINT	H.M.	PAINT	23/A2.7	24/A2.7	24/A2.7	6/A2.7	11		
58		15'-0" X 10'-0"			C	STEEL		FAC-P	STEEL	FAC-P	13/A2.7	14/A2.7	14/A2.7		1		ELECTRIC OPERATOR, SEE ELECTRICAL
59		3'-0" X 7'-0" X 1-3/4"			A	H.M.		PAINT	H.M.	PAINT	11/A2.8	12/A2.8	12/A2.8	6/A2.7	12		GUARD SHACK

ABBREVIATIONS

FAC	BY FACTORY
FAC-P	FACTORY PAINTED
FAC-ST:	FACTORY STAIN AND FINISH AS SPECIFIED
P	PAINT
S.C. WOOD	SOLID CORE WOOD
H.M.	HOLLOW METAL
ALUM	ALUMINUM
S.S.	STAINLESS STEEL

KEYED NOTES

1. GLASS AS SCHEDULED.
2. STEEL OVERHEAD COILING DOOR AS SPECIFIED.
3. PROVIDE DRAFT CURTAIN AND STAINLESS STEEL TRIM AS SPECIFIED.
4. 1" THICK GREY SMARTCELLS, ANTI-FATIGUE FLOORING BY SATECH INC. TELEPHONE 360-748-8711, www.smartcellsusa.com.
5. 48" HIGH DIAMOND PLATED, STEEL WAINSCOT ON ALL WALLS.

GENERAL NOTES

A. ALL ALUMINUM FRAMED WINDOWS ARE TO HAVE A BRONZE FINISH AS SPECIFIED.

B. SEE SPECIFICATIONS FOR DOORS THAT ARE TO BE PROVIDED WITH "DIAMOND PLATED" KICK PLATES AT EACH SIDE OF DOOR.

GLASS SCHEDULE

G-1 1" TINTED, INSULATED GLASS.

G-2 1/4" CLEAR GLASS AS SPECIFIED.

G-3 1/4" CLEAR TEMPERED GLASS AS SPECIFIED.

LEGEND

(1) SEE KEYED NOTES

REFERENCES - BENCHMARK

DATE	REVISIONS	BY

CONSULTANT'S NAME

mijares mora
ARCHITECTS INC.
EL PASO, TEXAS 79912
FAX: 542-1984
111 N. FESTIVAL
TEL: 915-542-1991

ARCHITECT'S SEAL

REGISTERED ARCHITECT JORGE L. MORA 12526 STATE OF TEXAS

DATE 5-31-16

SCALE

DATE MAY 2016
DESIGN BY MM/RMP
DRAWN BY S.D.
CHKD. BY S.D.
APPD. BY JLM
JOB NO. 1603

PROJECT NAME

EL PASO INTERNATIONAL AIRPORT
CHECKED BAGGAGE INSPECTION SYSTEM

6701 CONVAIR RD. EL PASO, TEXAS

EL PASO INTERNATIONAL AIRPORT

CITY OF EL PASO

SHEET TITLE

SCHEDULES

A2.6

FILE NO. 238512

SHEET ___ OF ___

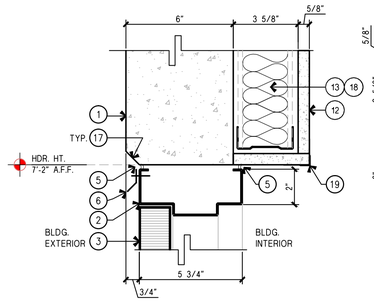

1 HEAD DETAIL
SCALE: 3"=1'-0"

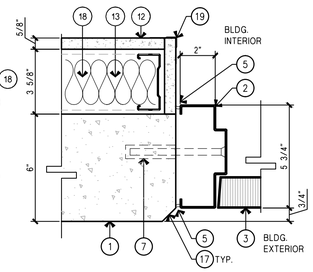

2 JAMB DETAIL
SCALE: 3"=1'-0"

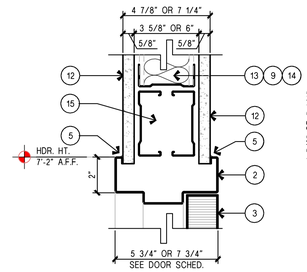

3 HEAD DETAIL
SCALE: 3"=1'-0"

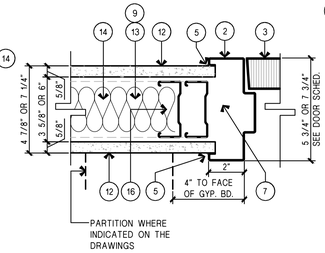

4 JAMB DETAIL
SCALE: 3"=1'-0"

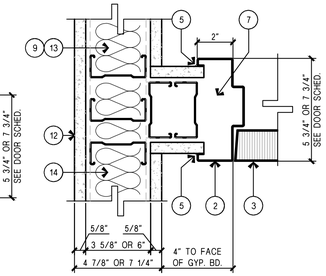

5 JAMB DETAIL
SCALE: 3"=1'-0"

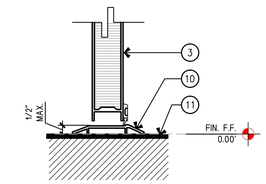

6 THRESHOLD DETAIL
SCALE: 3" = 1'-0"

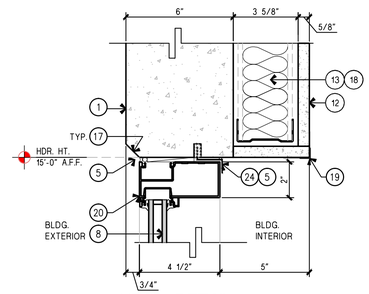

7 HEAD DETAIL
SCALE: 3"=1'-0"

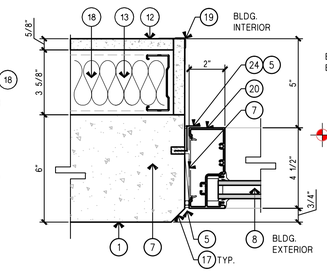

8 JAMB DETAIL
SCALE: 3"=1'-0"

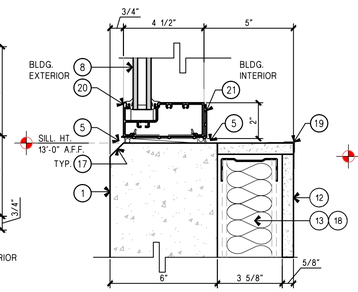

9 SILL DETAIL
SCALE: 3"=1'-0"

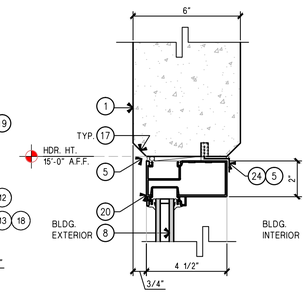

10 HEAD DETAIL
SCALE: 3"=1'-0"

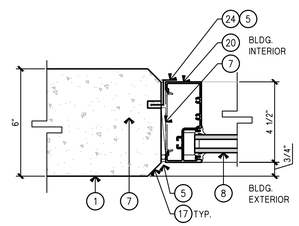

11 JAMB DETAIL
SCALE: 3"=1'-0"

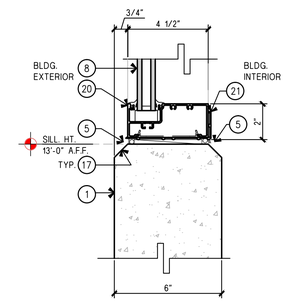

12 SILL DETAIL
SCALE: 3"=1'-0"

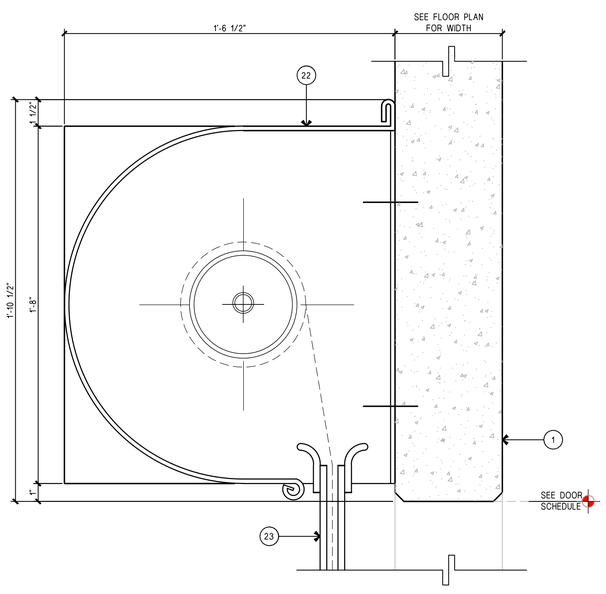

13 HEAD DETAIL
SCALE: 3"=1'-0"

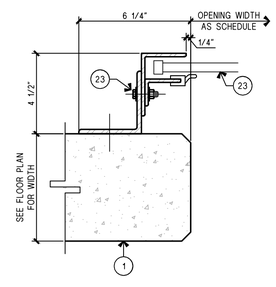

14 JAMB DETAIL
SCALE: 3"=1'-0"

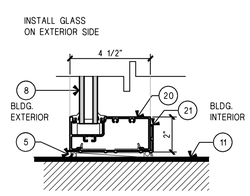

15 SILL/BASE DETAIL.
SCALE: 3" = 1'-0"

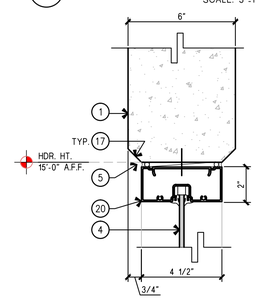

16 HEAD DETAIL
SCALE: 3"=1'-0"

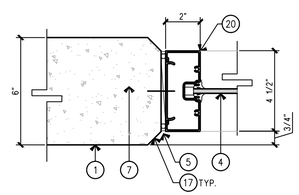

17 JAMB DETAIL
SCALE: 3"=1'-0"

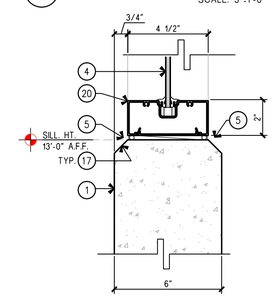

18 SILL DETAIL
SCALE: 3"=1'-0"

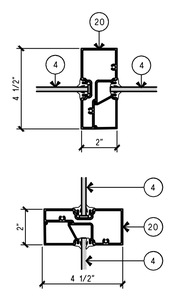

19 VERT/HOR MULLION DTL.
SCALE: 3" = 1'-0"

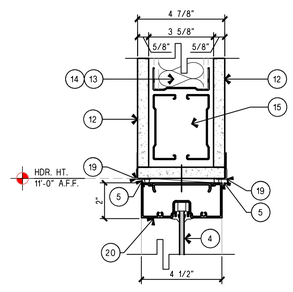

20 HEAD DETAIL
SCALE: 3"=1'-0"

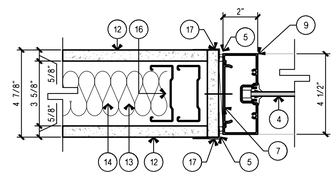

21 JAMB DETAIL
SCALE: 3"=1'-0"

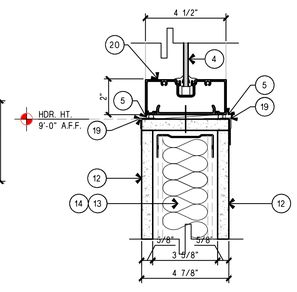

22 SILL DETAIL
SCALE: 3"=1'-0"

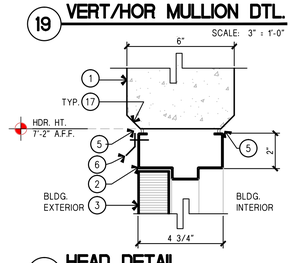

23 HEAD DETAIL
SCALE: 3"=1'-0"

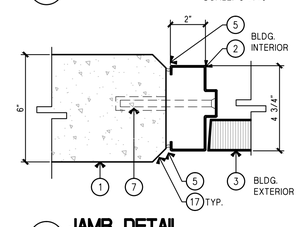

24 JAMB DETAIL
SCALE: 3"=1'-0"

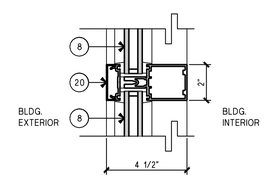

25 HOR. MULLION DETAIL
SCALE: 3"= 1'-0"

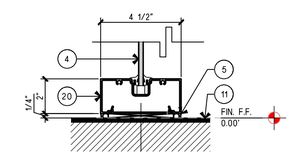

26 SILL/BASE DETAIL.
SCALE: 3"=1'-0"

KEYED NOTES

1. CONCRETE PANEL - REFER TO STRUCTURAL DRAWINGS.
2. HOLLOW METAL FRAME.
3. DOOR AS SCHEDULED.
4. 1/4" GLAZING SYSTEM.
5. CONT. SEALANT AS SPECIFIED.
6. GALVANIZED METAL FLASHING DRIP AS SPECIFIED.
7. PROVIDE A MINIMUM OF THREE ANCHORS PER JAMB
8. 1" INSULATED GLAZING SYSTEM.
9. 6" METAL STUD AT 16" O.C.
10. ALUMINUM THRESHOLD AS SCHEDULED
11. FINISH FLOOR
12. 5/8" GYP. BOARD
13. 3 5/8" METAL STUD @ 16" O.C.
14. SOUND ATTENUATION BLANKET AS SPECIFIED
15. 2-6" METAL STUD HEADER
16. DOUBLE STUD @ ALL JAMBS TYPICAL.
17. 3/4" CHAMFER, TYP.
18. BATT INSULATION. SEE WALL TYPES ON DRAWING A2.8.
19. METAL CORNER.
20. ALUMINUM WINDOW FRAME.
21. ALUMINUM SILL FLASHING WITH END DAMS AT BOTH ENDS TO MATCH WINDOW FRAME.
22. STEEL OVERHEAD COILING DOOR AS SPECIFIED.
23. STEEL DOOR GUIDE WITH WEATHER STRIP.
24. ALUMINUM WATER STOP BREAK METAL FLASHING CONT.

LEGEND

1 SEE KEYED NOTES

REFERENCES - BENCHMARK

DATE	REVISIONS	BY

CONSULTANT'S NAME

mijares ● mora
ARCHITECTS INC.
EL PASO, TEXAS 79912
111 N. FESTIVAL
TEL: 915-542-1991
FAX: 542-1994

ARCHITECT'S SEAL

REGISTERED ARCHITECT
JORGE L. MORA
12526
STATE OF TEXAS
DATE 5-31-16

SCALE

DATE	MAY 2016
DESIGN BY	MM/DBP
DRAWN BY	S.D.
CHKD. BY	S.D.
APPD. BY	JLM
JOB NO.	1603

PROJECT NAME

EL PASO INTERNATIONAL AIRPORT
CHECKED BAGGAGE INSPECTION SYSTEM
6701 CONVAIR RD. EL PASO, TEXAS

EL PASO INTERNATIONAL AIRPORT

CITY OF EL PASO

SHEET TITLE
DOOR AND WINDOW DETAILS

A2.7

FILE NO. 238512

SHEET ___ OF ___

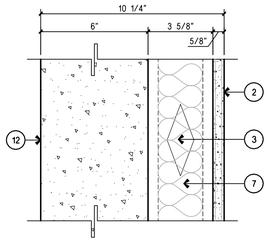

WALL TYPE 1

1. SEAL ALL PENETRATIONS.
2. EXTEND GYPSUM BOARD SHEATHING AND BATT INSULATION TO BOTTOM OF STRUCTURE ABOVE.

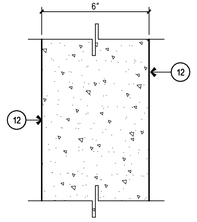

WALL TYPE 2

1. PROVIDE ELASTOMERIC FINISH (BOTH SIDES).
2. SEAL ALL PENETRATIONS.

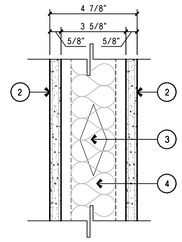

WALL TYPE 3

1. 45 TO 49 STC SOUND RATING (SEE SOUND RATED PARTITION GENERAL NOTES ON THIS SHEET FOR ADDITIONAL INFORMATION REGARDING WALLS WITH SPECIFIC STC RATINGS).
2. EXTEND FRAMING, GYPSUM BOARD AND SOUND ATTENUATING INSULATION TO BOTTOM OF STRUCTURE ABOVE.
3. METAL STUDS TO BE 20 GA. (MIN.).

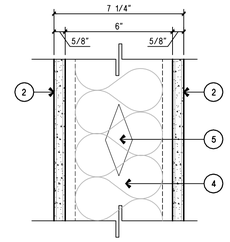

WALL TYPE 4

1. 45 TO 49 STC SOUND RATING (SEE SOUND RATED PARTITION GENERAL NOTES ON THIS SHEET FOR ADDITIONAL INFORMATION REGARDING WALLS WITH SPECIFIC STC RATINGS).
2. EXTEND FRAMING, GYPSUM BOARD AND SOUND ATTENUATING INSULATION TO BOTTOM OF STRUCTURE ABOVE.
3. METAL STUDS TO BE 20 GA. (MIN.).

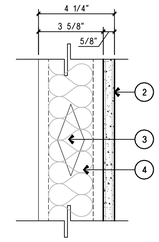

WALL TYPE 5

1. EXTEND FRAMING, GYPSUM BOARD AND SOUND ATTENUATING INSULATION TO BOTTOM OF METAL DECK.
2. METAL STUDS TO BE 20 GA. (MIN.).

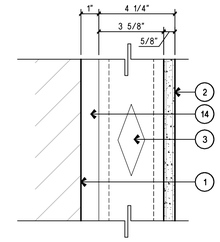

WALL TYPE 6

1. EXTEND FRAMING AND GYPSUM BOARD TO BOTTOM OF STRUCTURE ABOVE.
2. METAL STUDS TO BE 20 GA. (MIN.).

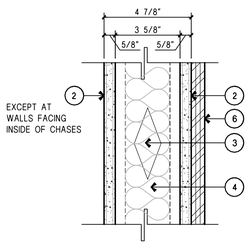

WALL TYPE 7

1. EXTEND FRAMING AND GYPSUM BOARD TO BOTTOM OF STRUCTURE ABOVE.
2. EXTEND PLYWOOD SHEATHING TO 8'-0" A.F.F.
3. METAL STUDS TO BE 20 GA. (MIN.).
4. ONE HOUR RATED ASSEMBLY, PER U.L. DESIGN U 465, ONLY WHERE INDICATED ON PLAN. SEAL ALL PENETRATIONS WITH FIREPROOF SEALANT AS SPECIFIED.

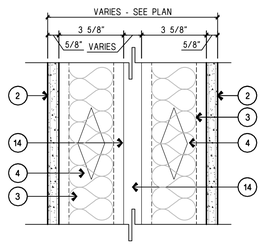

WALL TYPE 8

1. 60 TO 64 STC SOUND RATING (SEE SOUND RATED PARTITION GENERAL NOTES ON THIS SHEET FOR ADDITIONAL INFORMATION REGARDING WALLS WITH SPECIFIC STC RATINGS).
2. EXTEND FRAMING, GYPSUM BOARD AND SOUND ATTENUATING INSULATION TO BOTTOM OF STRUCTURE ABOVE.
3. METAL STUDS TO BE 20 GA. (MIN.)
4. ONE HOUR RATED ASSEMBLY-ONLY WHERE INDICATED. SEAL ALL PENETRATIONS WITH FIRE PROOF SEALANT AS SPECIFIED.

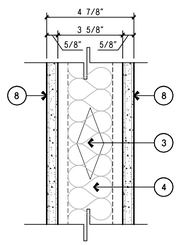

WALL TYPE 9

1. ONE HOUR RATED ASSEMBLY, PER U.L. DESIGN No. U465.
2. 45 TO 49 STC SOUND RATING (SEE GENERAL NOTES ON THIS SHEET FOR ADDITIONAL INFORMATION REGARDING WALLS WITH SPECIFIC STC RATINGS).
2. EXTEND FRAMING AND GYP. BOARD TO BOTTOM OF STRUCTURE ABOVE.
3. METAL STUDS TO BE 20 GA. (MIN.)
4. SEAL ALL PENETRATIONS WITH FIRE PROOF SEALANT, AS SPECIFIED.
5. SMOKE PROOF PARTITION.

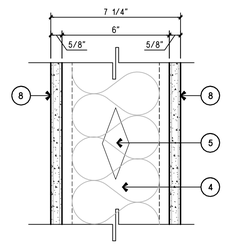

WALL TYPE 10

1. ONE HOUR RATED ASSEMBLY, PER U.L. DESIGN No. U465.
2. 45 TO 49 STC SOUND RATING (SEE GENERAL NOTES ON THIS SHEET FOR ADDITIONAL INFORMATION REGARDING WALLS WITH SPECIFIC STC RATINGS).
2. EXTEND FRAMING AND GYP. BOARD TO BOTTOM OF STRUCTURE ABOVE.
3. METAL STUDS TO BE 20 GA. (MIN.)
4. SEAL ALL PENETRATIONS WITH FIRE PROOF SEALANT, AS SPECIFIED.
5. SMOKE PROOF PARTITION.

1 WALL TYPES

SCALE: 3" = 1'-0"

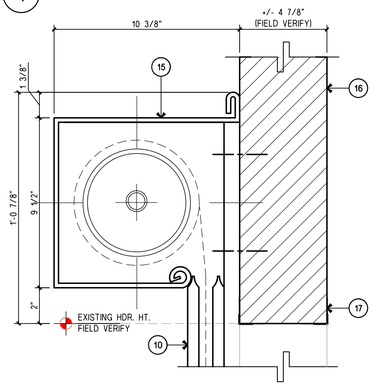

2 HEAD DETAIL

SCALE: 3"=1'-0"

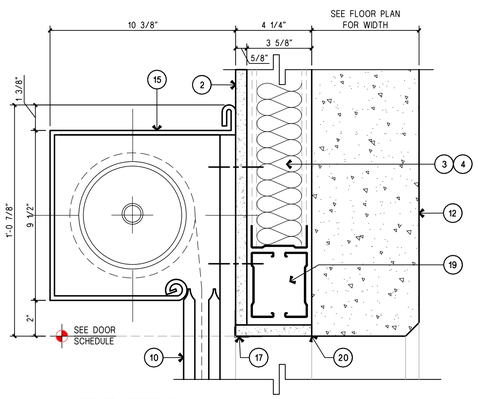

3 HEAD DETAIL

SCALE: 3"=1'-0"

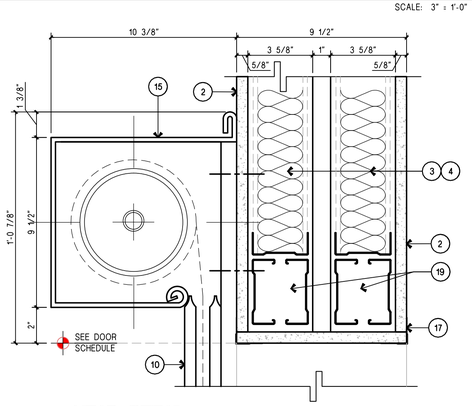

4 HEAD DETAIL

SCALE: 3"=1'-0"

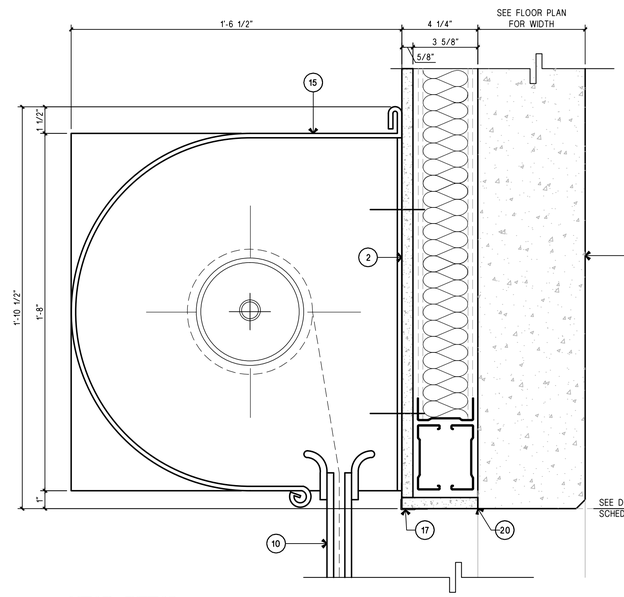

5 HEAD DETAIL

SCALE: 3"=1'-0"

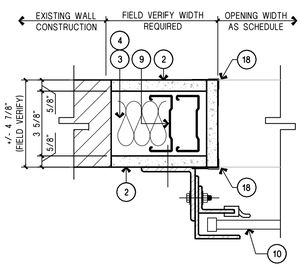

6 JAMB DETAIL

SCALE: 3"=1'-0"

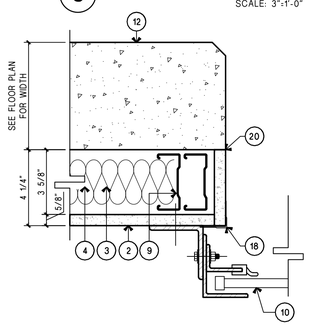

7 JAMB DETAIL

SCALE: 3"=1'-0"

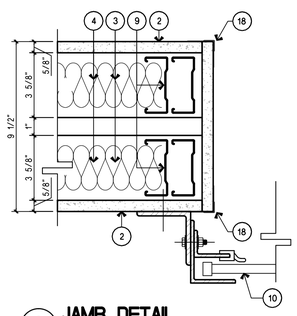

8 JAMB DETAIL

SCALE: 3"=1'-0"

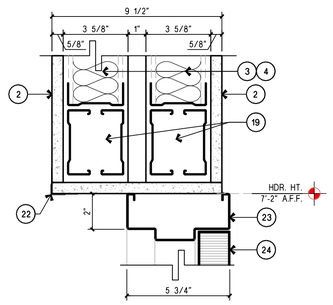

9 HEAD DETAIL

SCALE: 3"=1'-0"

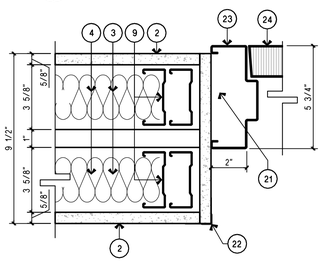

10 JAMB DETAIL

SCALE: 3"=1'-0"

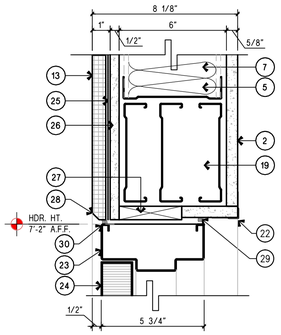

11 DOOR HEAD DETAIL

SCALE: 3"=1'-0"

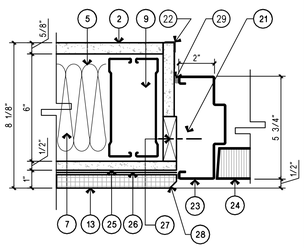

12 DOOR JAMB DETAIL

SCALE: 3"=1'-0"

KEYED NOTES

1. EXISTING WALL TO REMAIN.
2. 5/8" GYPSUM BOARD.
3. 3-5/8" METAL STUD @ 16" O.C.
4. SOUND ATTENUATING INSULATION.
5. 6" METAL STUD @ 16" O.C. MAX.
6. 3/4" FIRE RATED PLYWD.
7. BATT INSULATION. SEE GENERAL NOTES BELOW FOR REQUIREMENTS.
8. 5/8" TYPE "X" GYPSUM BOARD.
9. DOUBLE STUD @ ALL JAMBS TYPICAL.
10. OVERHEAD DOOR AS SCHEDULED.
11. CONTINUOUS SEALANT.
12. CONCRETE WALL PANEL.
13. EXTERIOR INSULATED FINISH SYSTEM (EIFS) AS SPECIFIED.
14. AIR CAVITY.
15. OVERHEAD DOOR HOUSING.
16. FACE OF EXISTING WALL.
17. STAINLESS STEEL TRIM.
18. STAINLESS STEEL DOOR JAMB.
19. METAL STUD HEADER.
20. J-MOLDING AND SEALANT.
21. PROVIDE A MINIMUM OF THREE ANCHORS PER JAMB.
22. METAL CORNER BEAD.
23. HOLLOW METAL FRAME.
24. DOOR AS SCHEDULED.
25. 1/2" EXTERIOR SHEATHING AS SPECIFIED.
26. AIR AND WATER RESISTIVE BARRIER AS SPECIFIED.
27. TREATED WOOD BLOCKING AS REQUIRED.
28. 3/8" CHAMFER TYPICAL.
29. SEALANT AS SPECIFIED.
30. GALVANIZED METAL FLASHING DRIP AS SPECIFIED.

GENERAL NOTES

A. ALL 3 5/8" METAL STUD WALLS ARE TO HAVE R-13 BATT INSULATION. ALL 6" METAL STUD WALLS ARE TO HAVE R-19 BATT INSULATION.

B. SEE ROOM FINISH SCHEDULES AND FIRE PROTECTION PLANS FOR WALLS THAT ARE REQUIRED TO BE FIRE RATED.

SOUND RATED PARTITIONS GENERAL NOTES

A. ALL PENETRATIONS INTO SOUND RATED PARTITIONS SHALL BE SEALED, LINED, OR INSULATED WITH A PERMANENT RESILIENT SEALANT, AS SPECIFIED.

B. ALL RIGID CONDUITS AND PLUMBING PIPES LOCATED IN SOUND RATED ASSEMBLIES SHALL BE ISOLATED FROM THE BUILDING CONSTRUCTION BY MEANS OF RESILIENT SLEEVES, MOUNTS, OR MINIMUM 1/4" THICK APPROVED RESILIENT MATERIAL.

C. PROVIDE A PERMANENT AND RESILIENT ACOUSTICAL SEALANT ALONG THE JOINT BETWEEN FLOOR AND WALLS.

D. ELECTRICAL OUTLET BOXES IN OPPOSITE FACES OF SEPARATION WALLS SHALL BE SEPARATED HORIZONTALLY BY 24". BACK AND SIDES OF BOXES SHALL BE SEALED WITH 1/8" RESILIENT SEALANT AND BACKED BY A MINIMUM OF 2" THICK SOUND ATTENUATING INSULATION.

LEGEND

1 SEE KEYED NOTES

REFERENCES -- BENCHMARK

DATE	REVISIONS	BY

CONSULTANT'S NAME

mijares ● mora
ARCHITECTS INC.
EL PASO, TEXAS 79912
FAX: 542-7934
111 N. FESTIVAL
TEL: 915-542-1931

ARCHITECT'S SEAL

REGISTERED ARCHITECT
JORGE L. MORA
12526
STATE OF TEXAS
DATE 5-31-16

SCALE

DATE	MAY 2016
DESIGN BY	MM/DBP
DRAWN BY	S.D.
CHKD. BY	S.D.
APPD. BY	JLM
JOB NO.	1603

PROJECT NAME

EL PASO INTERNATIONAL AIRPORT
CHECKED BAGGAGE INSPECTION SYSTEM
6701 CONVAIR RD. EL PASO, TEXAS

EL PASO INTERNATIONAL AIRPORT

CITY OF EL PASO

SHEET TITLE

WALL TYPES AND DETAILS

A2.8

FILE NO. 238512

SHEET___OF___

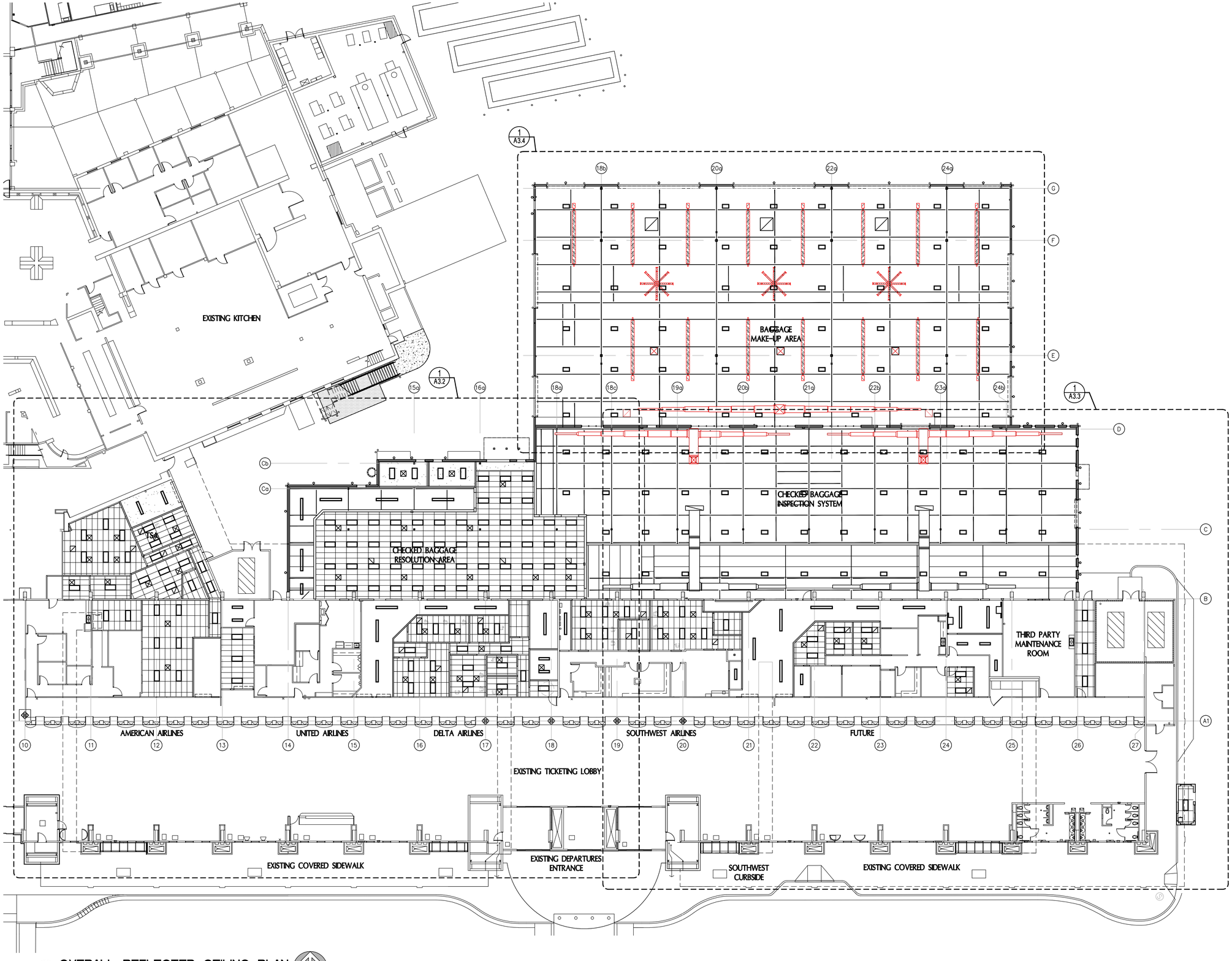

1 OVERALL REFLECTED CEILING PLAN

SCALE 1/16" = 1'-0"

PLAN NORTH

REFERENCES - BENCHMARK

DATE	REVISIONS	BY

CONSULTANT'S NAME

mijares • mora
ARCHITECTS INC.
EL PASO, TEXAS 79912
FAX: 542-7994
TEL: 915-542-1991

ARCHITECT'S SEAL

REGISTERED ARCHITECT
JORGE L. MORA
12526
STATE OF TEXAS
DATE 5-31-16

SCALE

DATE	MAY 2016
DESIGN BY	MM/RMP
DRAWN BY	S.D.
CHKD. BY	S.D.
APPD. BY	JLM
JOB NO.	1603

PROJECT NAME

EL PASO INTERNATIONAL AIRPORT
CHECKED BAGGAGE INSPECTION SYSTEM

6701 CONVAIR RD. EL PASO, TEXAS

EL PASO INTERNATIONAL AIRPORT

CITY OF EL PASO

SHEET TITLE

OVERALL REFLECTED CEILING PLAN

A3.1

FILE NO. 238512

SHEET ___ OF ___

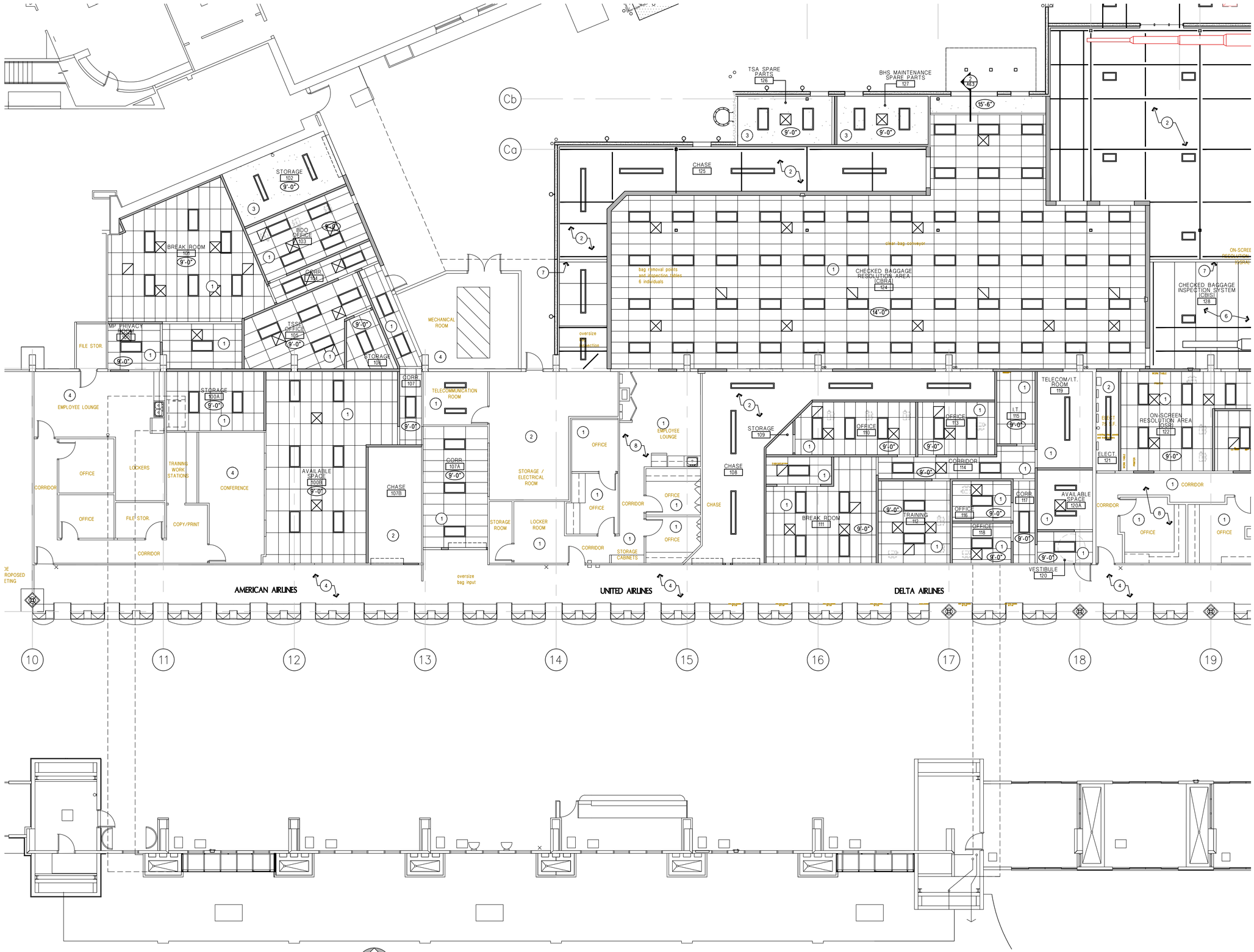

1 PARTIAL REFLECTED CEILING PLAN

SCALE 1/8" = 1'-0"

PLAN NORTH

KEYED NOTES

1. 2 X 4 LAY-IN ACOUSTICAL TILE.
2. EXPOSED STRUCTURE WITH SPRAYED ON FIREPROOFING.
3. GYPSUM BOARD CEILING ON SUSPENSION SYSTEM.
4. NO WORK IN THIS AREA UNLESS NOTED OTHERWISE.
5. EXISTING CEILING IN THIS AREA TO REMAIN. PATCH AND REPAIR AS REQUIRED FOR NEW CONSTRUCTION.
6. EXISTING ROOF STRUCTURE. SEE STRUCTURAL DRAWINGS FOR CONVEYOR SUPPORTS. REPLACE EXISTING SPRAYED ON FIRE PROTECTION AS REQUIRED.
7. FURROUT AROUND EXISTING CONCRETE FASCIA PANEL. SEE BUILDING SECTIONS.
8. SEE MECHANICAL DRAWINGS FOR LOCATION OF NEW SUPPLY AND RETURN REGISTERS AT EXISTING AIRLINE TENANT SPACE. NEW CEILINGS IN THESE AREAS ARE TO MATCH THE EXISTING CEILING TYPE AND CEILING GRID LAYOUT. CONTRACTOR TO FIELD VERIFY.

GENERAL NOTES

A. REFER TO MECHANICAL, PLUMBING AND ELECTRICAL DRAWINGS FOR WORK NOT SHOWN HERE.

LEGEND

- SUPPLY AIR DIFFUSER SEE MECHANICAL DRAWINGS FOR SIZE REQUIRED.
- RETURN AIR GRILLE SEE MECHANICAL DRAWINGS FOR SIZE REQUIRED.
- EXHAUST FAN - SEE MECHANICAL DRAWINGS FOR SIZE REQUIRED.
- 2x4 FLUORESCENT LIGHT - SEE ELECTRICAL DRAWINGS.
- PENDANT LIGHT FIXTURE- SEE ELECTRICAL DRAWINGS.
- RECESSED CAN LIGHT FIXTURE - SEE ELECTRICAL DRAWINGS.
- EXIT LIGHT- SEE ELECTRICAL DRAWINGS.
- EXTERIOR WALL MOUNTED LIGHT FIXTURE - SEE ELECTRICAL DRAWINGS.
- 2x2 SUSPENDED ACOUSTICAL LAY-IN CEILING TILE AS SPECIFIED.
- 2x4 SUSPENDED ACOUSTICAL LAY-IN CEILING TILE AS SPECIFIED.
- GYPSUM BOARD CEILING AS SPECIFIED.
- 9'-0" DENOTES CEILING HEIGHT

LEGEND

- (1) SEE KEYED NOTES

REFERENCES – BENCHMARK

DATE	REVISIONS	BY

CONSULTANT'S NAME

mijares mora
ARCHITECTS INC.
111 N. FESTIVAL
EL PASO, TEXAS 79912
TEL: 915-542-1591
FAX: 542-1594

ARCHITECT'S SEAL

SCALE

DATE	MAY 2016
DESIGN BY	MM/OMP
DRAWN BY	S.D.
CHKD. BY	S.D.
APPD. BY	J.M.
JOB NO.	1603

PROJECT NAME

EL PASO INTERNATIONAL AIRPORT
CHECKED BAGGAGE INSPECTION SYSTEM

6701 CONVAIR RD.
EL PASO, TEXAS

EL PASO International Airport

CITY OF EL PASO

SHEET TITLE

PARTIAL REFLECTED CEILING PLAN

A3.2

FILE NO. 238512

SHEET___OF___

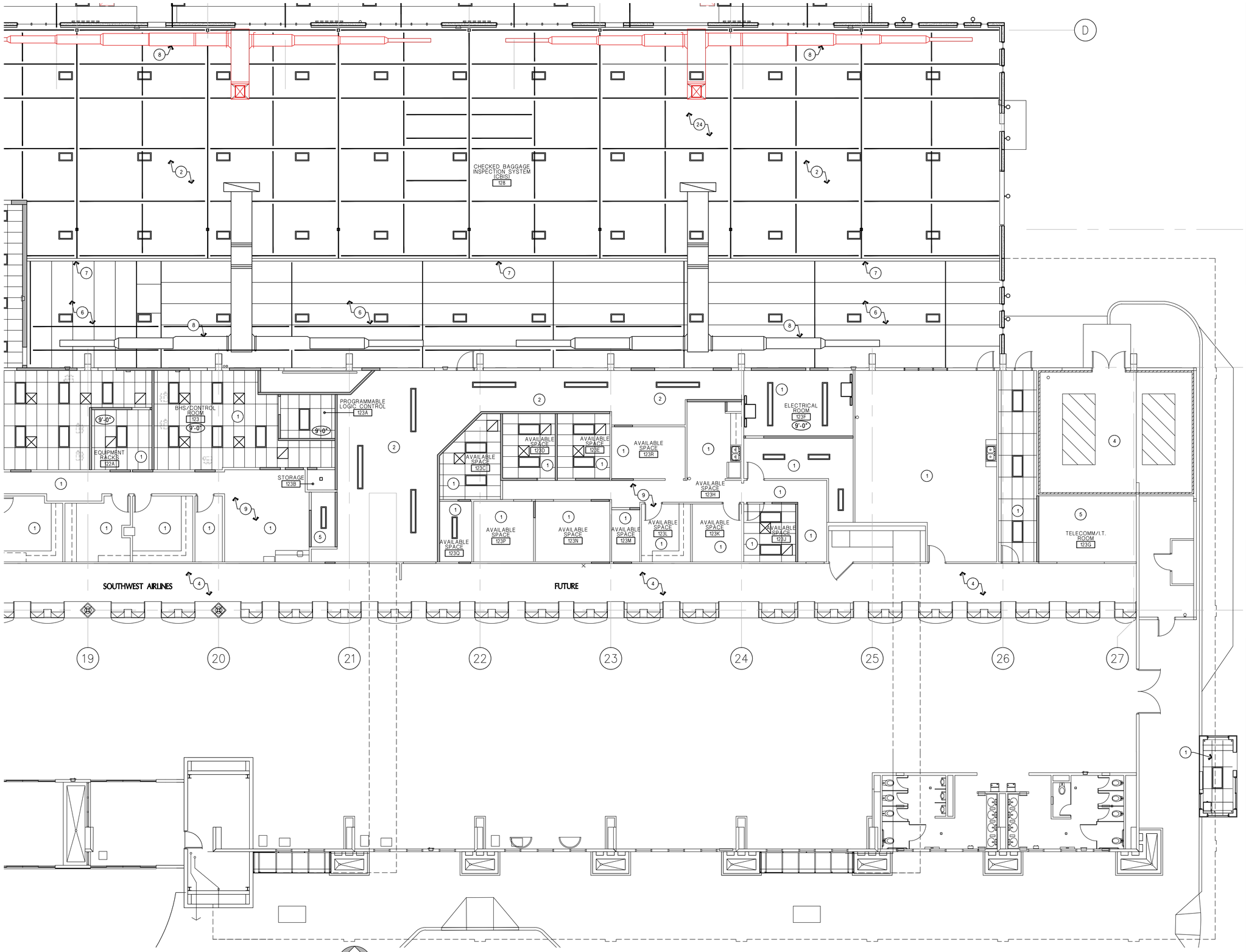

1 PARTIAL REFLECTED CEILING PLAN

SCALE 1/8" = 1'-0"

PLAN NORTH

KEYED NOTES

1. 2 X 4 LAY-IN ACOUSTICAL TILE.
2. EXPOSED STRUCTURE WITH SPRAYED ON FIREPROOFING.
3. GYPSUM BOARD CEILING ON SUSPENSION SYSTEM.
4. NO WORK IN THIS AREA UNLESS NOTED OTHERWISE.
5. EXISTING CEILING IN THIS AREA TO REMAIN. PATCH AND REPAIR AS REQUIRED FOR NEW CONSTRUCTION.
6. EXISTING ROOF STRUCTURE. SEE STRUCTURAL DRAWINGS FOR CONVEYOR SUPPORTS. REPLACE EXISTING SPRAYED ON FIRE PROTECTION AS REQUIRED.
7. FURROUT AROUND EXISTING CONCRETE FASCIA PANEL. SE BUILDING SECTIONS.
8. MECHANICAL DUCT. SEE MECHANICAL DRAWINGS.
9. SEE MECHANICAL DRAWINGS FOR LOCATION OF NEW SUPPLY AND RETURN REGISTERS AT EXISTING AIRLINE TENANT SPACE. NEW CEILINGS IN THESE AREAS ARE TO MATCH THE EXISTING CEILING TYPE AND CEILING GRID LAYOUT. CONTRACTOR TO FIELD VERIFY.
10. TROLLY HOIST BEAM. SEE STRUCTURAL AND "B" SERIES DRAWINGS FOR LOCATION AND REQUIREMENTS.

GENERAL NOTES

A. REFER TO MECHANICAL, PLUMBING AND ELECTRICAL DRAWINGS FOR WORK NOT SHOWN HERE.

LEGEND

- SUPPLY AIR DIFFUSER SEE MECHANICAL DRAWINGS FOR SIZE REQUIRED.
- RETURN AIR GRILLE SEE MECHANICAL DRAWINGS FOR SIZE REQUIRED.
- EXHAUST FAN - SEE MECHANICAL DRAWINGS FOR SIZE REQUIRED.
- 2x4 FLUORESCENT LIGHT - SEE ELECTRICAL DRAWINGS.
- PENDANT LIGHT FIXTURE- SEE ELECTRICAL DRAWINGS.
- RECESSED CAN LIGHT FIXTURE - SEE ELECTRICAL DRAWINGS.
- EXIT LIGHT- SEE ELECTRICAL DRAWINGS.
- EXTERIOR WALL MOUNTED LIGHT FIXTURE - SEE ELECTRICAL DRAWINGS.
- 2x2 SUSPENDED ACOUSTICAL LAY-IN CEILING TILE AS SPECIFIED.
- 2x4 SUSPENDED ACOUSTICAL LAY-IN CEILING TILE AS SPECIFIED.
- GYPSUM BOARD CEILING AS SPECIFIED.
- 9'-0" DENOTES CEILING HEIGHT

LEGEND

- 1 SEE KEYED NOTES

REFERENCES -- BENCHMARK

DATE	REVISIONS	BY

CONSULTANT'S NAME

mijares ● mora
ARCHITECTS INC.
EL PASO, TEXAS 79912
FAX: 542-7594
111 N. FESTIVAL
TEL: 915-542-1591

ARCHITECT'S SEAL

REGISTERED ARCHITECT
JORGE L. MORA
12526
STATE OF TEXAS
DATE 5-31-16

SCALE

DATE	MAY 2016
DESIGN BY	MM/RP
DRAWN BY	S.D.
CHKD. BY	S.D.
APPD. BY	JLM
JOB NO.	1603

PROJECT NAME

EL PASO INTERNATIONAL AIRPORT
CHECKED BAGGAGE INSPECTION SYSTEM

6701 CONVAIR RD. EL PASO, TEXAS

EL PASO INTERNATIONAL AIRPORT

CITY OF EL PASO

SHEET TITLE

PARTIAL REFLECTED CEILING PLAN

A3.3

FILE NO. 238512

SHEET__OF__

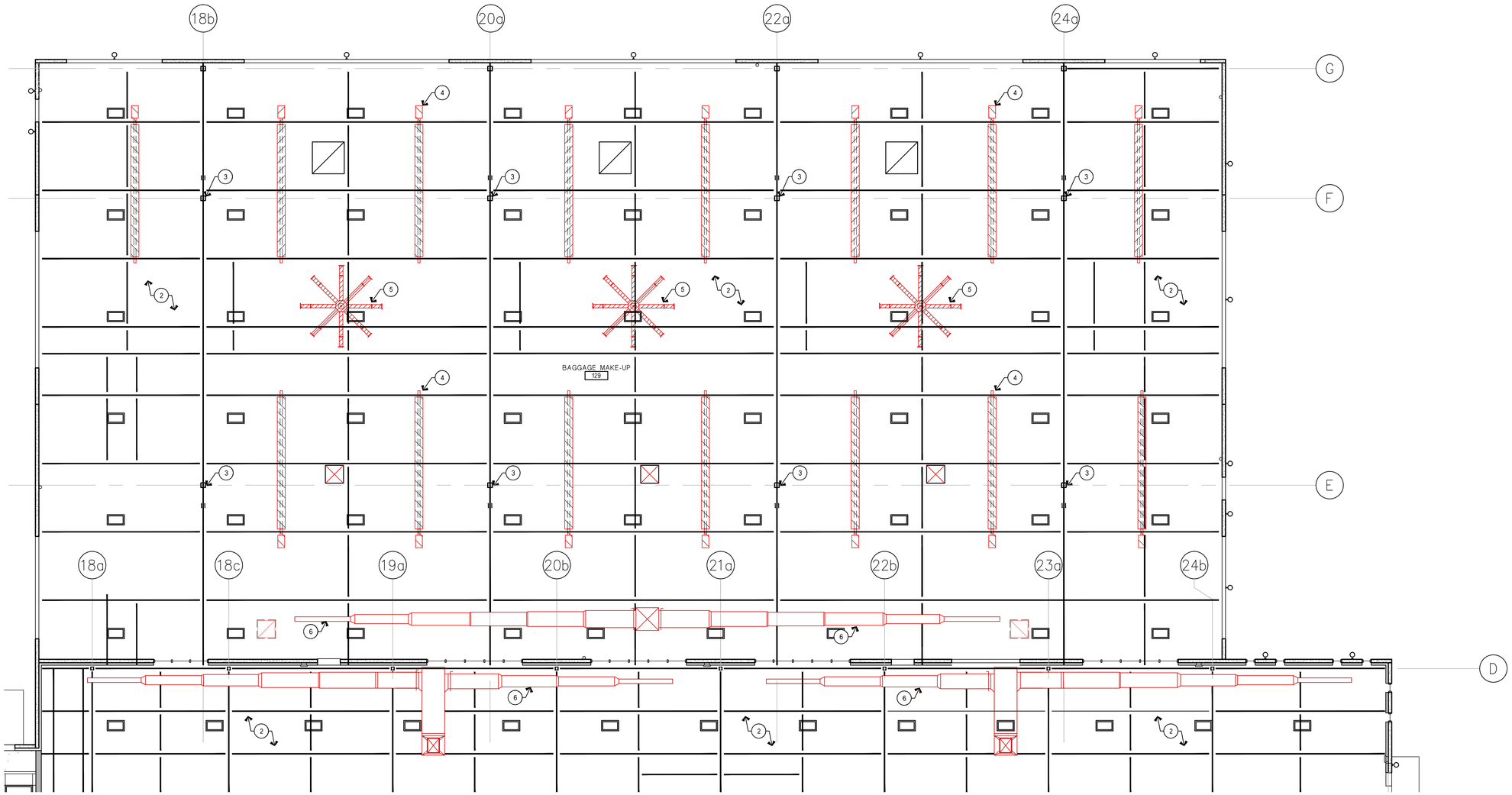

1 PARTIAL REFLECTED CEILING PLAN

SCALE 1/8" = 1'-0"

PLAN NORTH

KEYED NOTES

1. 2 X 4 LAY-IN ACOUSTICAL TILE.
2. EXPOSED STRUCTURE WITH SPRAYED ON FIREPROOFING ON PRIMARY STRUCTURE ONLY (BEAMS AND COLUMNS). ACOUSTICAL METAL DECK IS TO BE PAINTED.
3. STEEL COLUMN. SEE STRUCTURAL DRAWINGS.
4. MECHANICAL EQUIPMENT. SEE MECHANICAL DRAWINGS.
5. CEILING FANS. SEE MECHANICAL DRAWINGS.
6. MECHANICAL DUCT. SEE MECHANICAL DRAWINGS.

GENERAL NOTES

A. REFER TO MECHANICAL, PLUMBING AND ELECTRICAL DRAWINGS FOR WORK NOT SHOWN HERE.

LEGEND

- SUPPLY AIR DIFFUSER SEE MECHANICAL DRAWINGS FOR SIZE REQUIRED.
- RETURN AIR GRILLE SEE MECHANICAL DRAWINGS FOR SIZE REQUIRED.
- EXHAUST FAN - SEE MECHANICAL DRAWINGS FOR SIZE REQUIRED.
- 2x4 FLUORESCENT LIGHT - SEE ELECTRICAL DRAWINGS.
- PENDANT LIGHT FIXTURE- SEE ELECTRICAL DRAWINGS.
- RECESSED CAN LIGHT FIXTURE - SEE ELECTRICAL DRAWINGS.
- EXIT LIGHT- SEE ELECTRICAL DRAWINGS.
- EXTERIOR WALL MOUNTED LIGHT FIXTURE - SEE ELECTRICAL DRAWINGS.
- 2x2 SUSPENDED ACOUSTICAL LAY-IN CEILING TILE AS SPECIFIED.
- 2x4 SUSPENDED ACOUSTICAL LAY-IN CEILING TILE AS SPECIFIED.
- GYPSUM BOARD CEILING AS SPECIFIED.
- 9'-0" DENOTES CEILING HEIGHT

LEGEND

- 1 SEE KEYED NOTES

REFERENCES -- BENCHMARK

DATE	REVISIONS	BY

CONSULTANT'S NAME

mijares ● mora
ARCHITECTS INC.
EL PASO, TEXAS 79912
FAX: 542-7594
111 N. FESTIVAL
TEL: 915-542-1991

ARCHITECT'S SEAL

REGISTERED ARCHITECT
JORGE L. MORA
12526
STATE OF TEXAS
DATE 5-31-16

SCALE

DATE	MAY 2016
DESIGN BY	MM/RMP
DRAWN BY	S.D.
CHKD. BY	S.D.
APPD. BY	JLM
JOB NO.	1603

PROJECT NAME

EL PASO INTERNATIONAL AIRPORT
CHECKED BAGGAGE INSPECTION SYSTEM

6701 CONVAIR RD. EL PASO, TEXAS

EL PASO INTERNATIONAL AIRPORT

CITY OF EL PASO

SHEET TITLE

PARTIAL REFLECTED CEILING PLAN

A3.4

FILE NO. 238512

SHEET___OF___

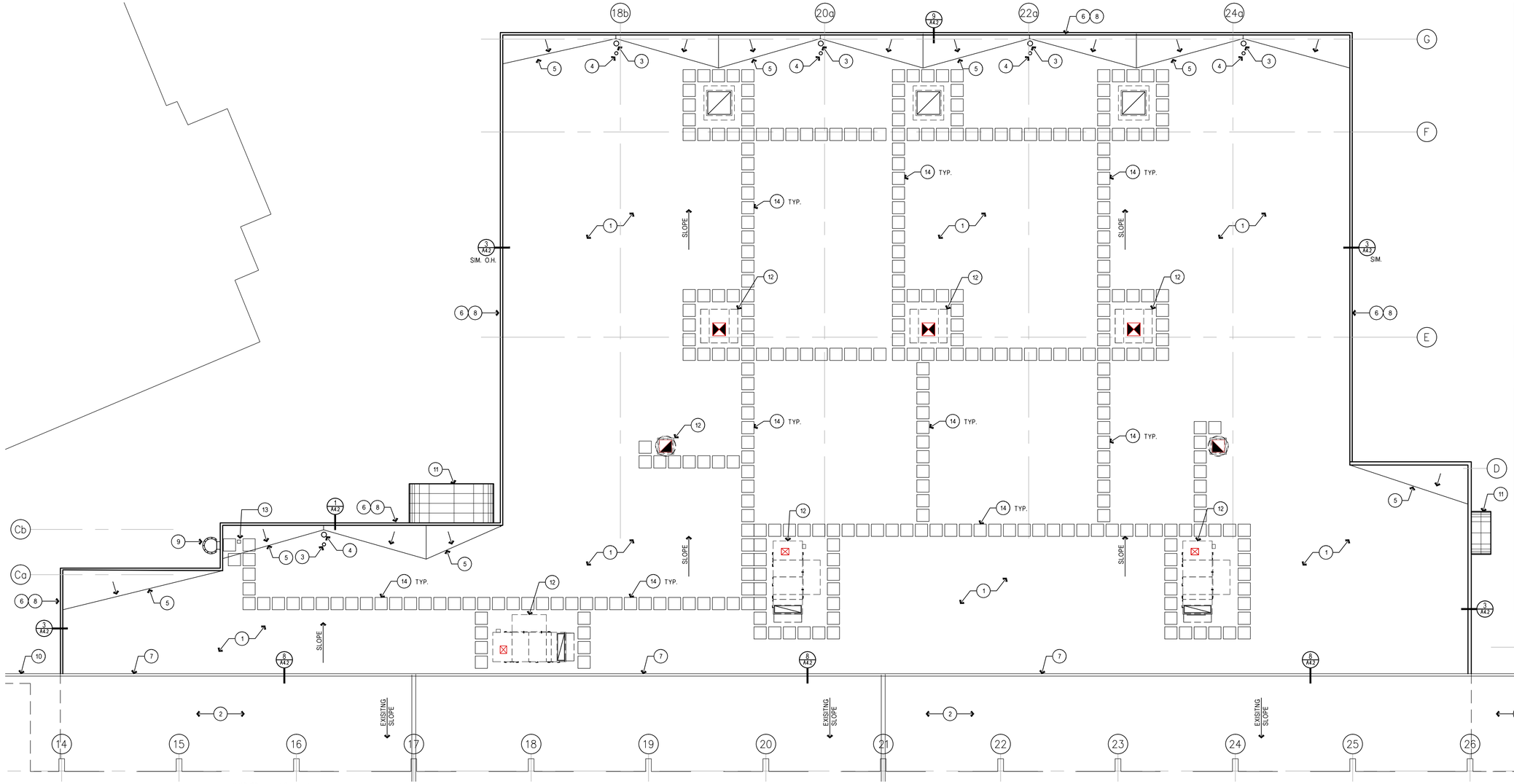

1 ROOF PLAN

SCALE 3/32" = 1'-0"

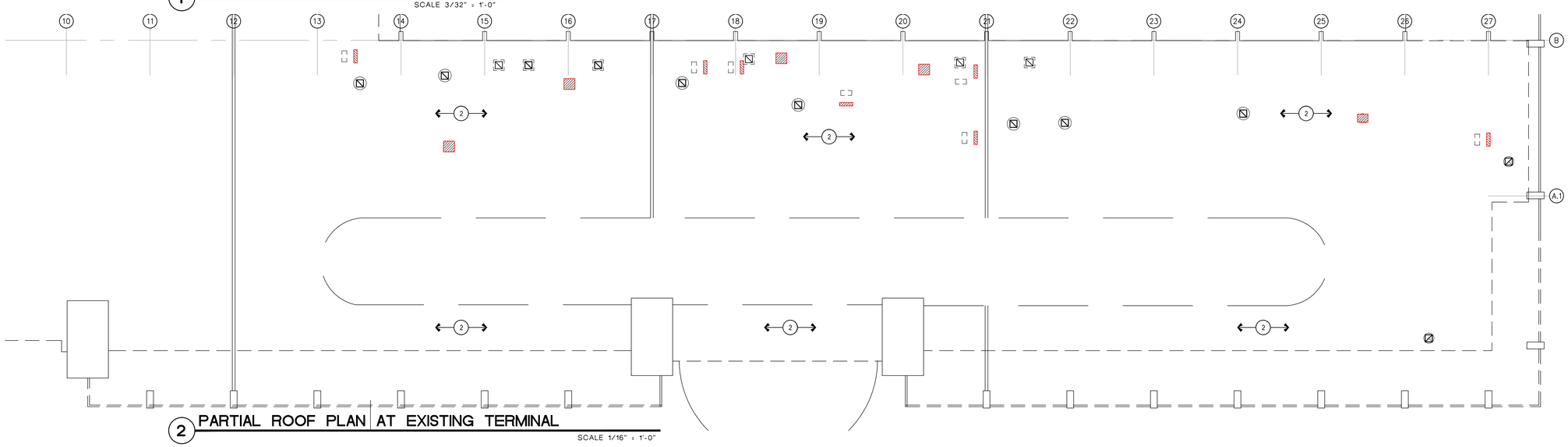

2 PARTIAL ROOF PLAN AT EXISTING TERMINAL

SCALE 1/16" = 1'-0"

KEYED NOTES

1. SINGLE PLY ROOFING SYSTEM AS SPECIFIED.
2. EXISTING ROOF. SEE MECHANICAL DRAWINGS FOR NEW WORK. PATCH AND REPAIR ROOF AS REQUIRED.
3. ROOF DRAIN. SEE PLUMBING DRAWINGS.
4. OVERFLOW DRAIN. SEE PLUMBING DRAWINGS.
5. CRICKET. SLOPE TO DRAIN.
6. 16 OZ. CONTINUOUS COPPER COPING WITH PATINA FINISH TO MATCH EXISTING.
7. EXISTING CONCRETE FASCIA PANEL WITH EXPANSION JOINT COVER.
8. CONCRETE WALL PANEL.
9. ROOF LADDER AND SAFETY CAGE. SEE A4.2.
10. EXISTING FASCIA PANEL TO REMAIN.
11. OVERHANG CANOPY: 16 OZ. STANDING SEAM COPPER ROOF PANEL SYSTEM WITH PATINA FINISH TO MATCH EXISTING.
12. MECHANICAL EQUIPMENT. SEE MECHANICAL DRAWINGS.
13. "WERKARM ARTICULATING JIB CRANE", 300 lb CAPACITY, BASE MOUNT, BY CRANEWERKS OR APPROVED EQUAL.
14. WALK PADS AS SPECIFIED.

LEGEND

(1) SEE KEYED NOTES

GENERAL NOTES

A. SEE MECHANICAL DRAWINGS FOR LOCATION, NOTES AND DETAILS OF NEW MECHANICAL UNITS, VENTS, EXHAUST FANS, ETC.

B. SEE PLUMBING DRAWINGS FOR LOCATION OF ROOF DRAIN LEADER CONTINUATION AND DISCHARGE.

C. ALL NEW ROOF PENETRATIONS (I.E. EXHAUST FANS, MECHANICAL UNITS, ETC.) ARE TO HAVE CRICKETS INSTALLED IN ORDER TO DIVERT WATER AWAY FOR POSITIVE DRAINAGE.

D. CRICKETS ARE TO HAVE A 1/2" PER FOOT SLOPE, MINIMUM

E. ALL ROOF PATCH AND REPAIR WORK AS REQUIRED IS TO CONSIST OF A COMPLETE WATERTIGHT SYSTEM AND WILL COMPLY WITH N.R.C.A. DETAILS, RECOMMENDATIONS AND REQUIREMENTS AS A MINIMUM STANDARD.

REFERENCES -- BENCHMARK

DATE	REVISIONS	BY

CONSULTANT'S NAME

mijares mora
ARCHITECTS INC.
EL PASO, TEXAS 79912
FAX: 542-7994
111 N. FESTIVAL
TEL: 915-542-1991

ARCHITECT'S SEAL

REGISTERED ARCHITECT
JORGE L. MORA
12526
STATE OF TEXAS
DATE 5-31-16

SCALE

DATE	MAY 2016
DESIGN BY	MM/BP
DRAWN BY	S.D.
CHKD. BY	S.D.
APPD. BY	JLM
JOB NO.	1603

PROJECT NAME

EL PASO INTERNATIONAL AIRPORT
CHECKED BAGGAGE INSPECTION SYSTEM

6701 CONVAIR RD. EL PASO, TEXAS

EL PASO INTERNATIONAL

CITY OF EL PASO

SHEET TITLE

ROOF PLAN

A4.1

FILE NO. 238512

SHEET__OF__

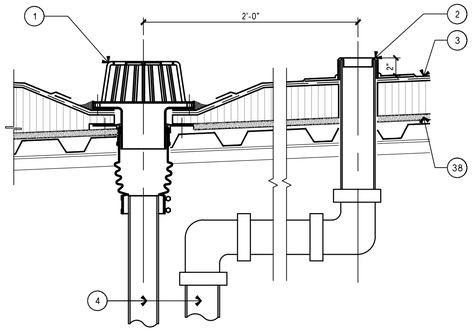

1 ROOF AND OVERFLOW DRAIN DETAIL
SCALE: 1 1/2"=1'-0"

NOTE:
1. A FIELD WELD CANNOT PASS WITHIN 12" OF THE CLAMPING RING.
2. MEMBRANE MUST EXTEND MINIMUM 1" BEYOND THE BOLT HOLES, THE CLAMPING RING BOLTS MUST PENETRATE THE MEMBRANE.
3. TAPERED INSULATION TO CREATE A ROOF SUMP MINIMUM 36"X36" IN SIZE.

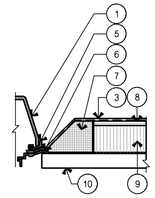

2 ROOF DRAIN FLASHING DTL.
SCALE: 1 1/2"=1'-0"

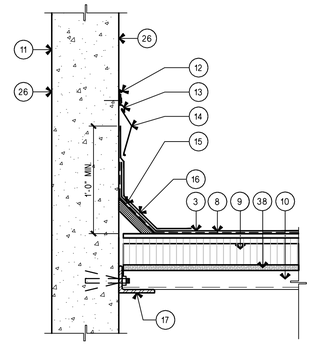

3 FLASHING DTL.
SCALE: 1 1/2"=1'-0"

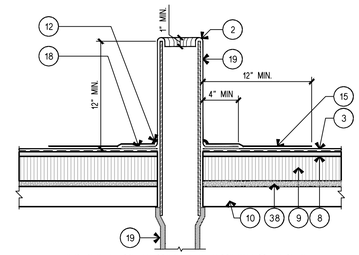

4 VENT STACK FLASHING DTL.
SCALE: 1 1/2"=1'-0"

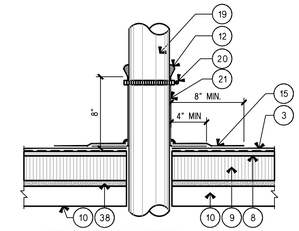

5 FIELD-WRAPPED PENETRATION FLASHING DTL.
SCALE: 1 1/2"=1'-0"

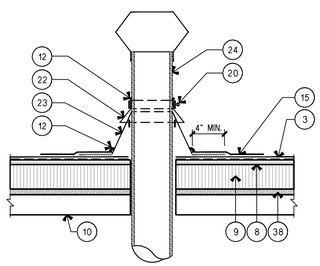

6 HEAT STACK FLASHING DTL.
SCALE: 1 1/2"=1'-0"

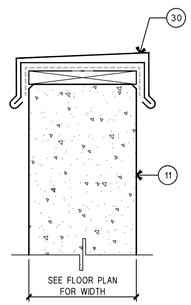

7 COPING DTL.
SCALE: 3"=1'-0"

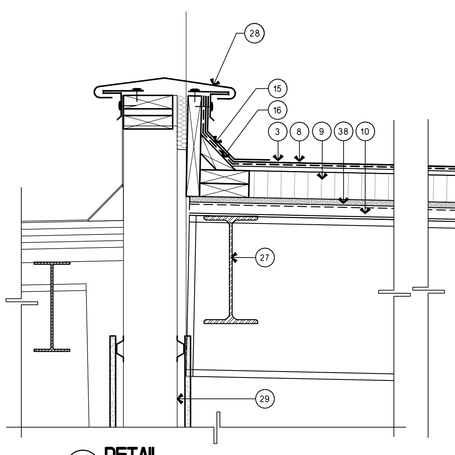

8 DETAIL
SCALE: 1 1/2" = 1'-0"

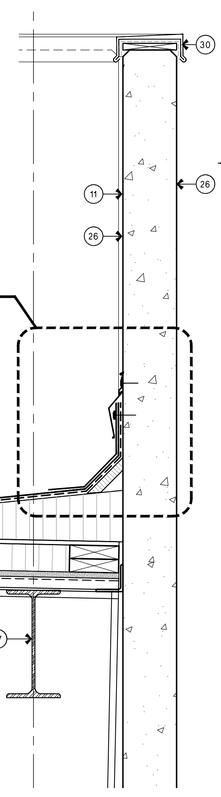

9 DETAIL
SCALE: 1 1/2" = 1'-0"

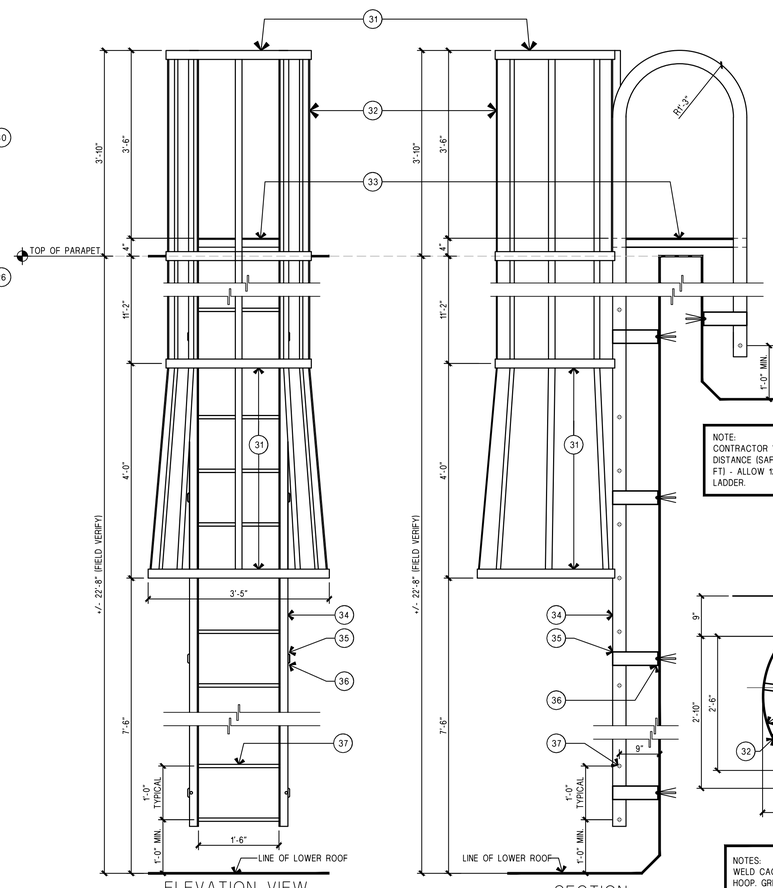

NOTE:
CONTRACTOR VERIFY TOP OF PARAPET TO ROOF DISTANCE (SAFETY CAGE REQUIRED FOR HEIGHTS OVER 10 FT) - ALLOW 12 INCHES TO FIRST RUNG OF ROOF SIDE LADDER.

10 ROOF LADDER DETAIL
SCALE: 3/4" = 1'-0"

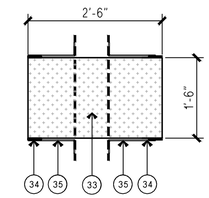

PLATE VIEW

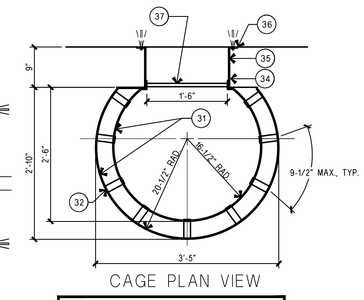

CAGE PLAN VIEW

NOTES:
WELD CAGE RUNNERS ALONG TOP AND BOTTOM OF HOOP. GRIND SMOOTH ALL WELDS BEFORE PAINTING.

KEYED NOTES

1. ROOF DRAIN. SEE PLUMBING DRAWINGS.
2. ROLL LEAD FLASHING.
3. ROOFING SYSTEM.
4. ROOF DRAIN LEADER PIPE.
5. DRAIN CLAMP RING.
6. WATER BLOCK.
7. TAPERED INSULATION.
8. 1/2" COVER BOARD.
9. 3" RIGID INSULATION.
10. ACOUSTICAL STEEL DECK. SEE STRUCTURAL DRAWINGS.
11. CONCRETE WALL PANEL.
12. CONTINUOUS SEALANT.
13. METAL COUNTER FLASHING FRY REGLET TYPE.
14. FRY REGLET METAL SPRINGLOCK FLASHING.
15. MEMBRANE FLASHING.
16. 4" CANT STRIP.
17. CONTINUOUS STEEL ANGLE.
18. FLANGE.
19. PIPE.
20. STAINLESS STEEL CLAMP.
21. COLLAR PIECE.
22. DRAW BAND OR WELL UMBRELLA TO STACK.
23. METAL UMBRELLA.
24. HEAT STACK.
25. 3/4" CHAMFER.
26. ELASTOMERIC COATING AS SPECIFIED.
27. STEEL STRUCTURE. SEE STRUCTURAL.
28. EXPANSION JOINT COVER.
29. EXISTING CONCRETE FASCIA PANEL.
30. 16 OZ. CONTINUOUS COPPER COPING WITH PATINA FINISH TO MATCH EXISTING.
31. 1/4" X 2" HOOPS WELDED TO SEVEN 3/16" X 1 1/2" VERTICAL BARS FOR STRUCTURAL STABILITY-PAINTED.
32. WELDED STEEL SAFETY CAGE.
33. 1/4" STEEL CHECKER PLATE.
34. 3/8" X 3" STEEL STRINGERS.
35. 5/16" X 3" WALL BRACKETS BOLTED TO WALL.
36. CONTINUOUS SEALANT AT EACH WALL BRACKET PENETRATION.
37. 3/4" DIAM. STEEL RUNGS DRILLED AND WELDED TO STRINGERS AT 1'-0" O.C., TYP.
38. 5/8" TYPE "X" GYPSUM BOARD.

LEGEND

(1) SEE KEYED NOTES

GENERAL NOTES

A. SEE MECHANICAL DRAWINGS FOR LOCATION, NOTES AND DETAILS OF NEW MECHANICAL UNITS, VENTS, EXHAUST FANS, ETC.

B. SEE PLUMBING DRAWINGS FOR LOCATION OF ROOF DRAIN LEADER CONTINUATION AND DISCHARGE.

C. ALL NEW ROOF PENETRATIONS (I.E. EXHAUST FANS, MECHANICAL UNITS, ETC.) ARE TO HAVE CRICKETS INSTALLED IN ORDER TO DIVERT WATER AWAY FOR POSITIVE DRAINAGE.

D. CRICKETS ARE TO HAVE A 1/2" PER FOOT SLOPE, MINIMUM

E. ALL ROOF PATCH AND REPAIR WORK AS REQUIRED IS TO CONSIST OF A COMPLETE WATERTIGHT SYSTEM AND WILL COMPLY WITH N.R.C.A. DETAILS, RECOMMENDATIONS AND REQUIREMENTS AS A MINIMUM STANDARD.

REFERENCES -- BENCHMARK

DATE	REVISIONS	BY

CONSULTANT'S NAME

mijares mora
ARCHITECTS INC.
EL PASO, TEXAS 79912
111 N. FESTIVAL
TEL: 915-542-1991
FAX: 542-1994

ARCHITECT'S SEAL

REGISTERED ARCHITECT
JORGE L. MORA
12526
STATE OF TEXAS
DATE 5-31-16

SCALE

DATE	MAY 2016
DESIGN BY	MM/RP
DRAWN BY	S.D.
CHKD. BY	S.D.
APPD. BY	JLM
JOB NO.	1603

PROJECT NAME

EL PASO INTERNATIONAL AIRPORT
CHECKED BAGGAGE INSPECTION SYSTEM

6701 CONVAIR RD. EL PASO, TEXAS

EL PASO INTERNATIONAL AIRPORT

CITY OF EL PASO

SHEET TITLE

ROOF DETAILS

A4.2

FILE NO. 238512

SHEET___OF___

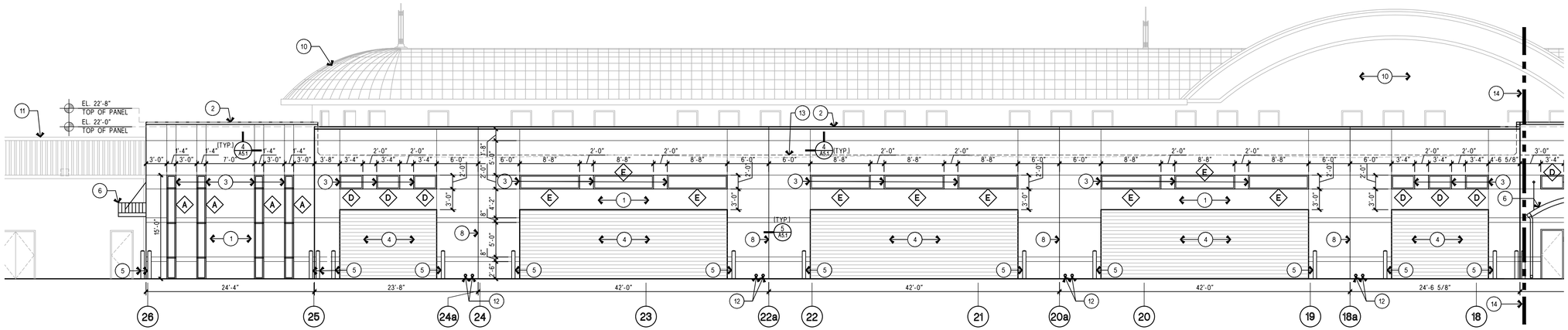

1 NORTH ELEVATION

SCALE 1/8" = 1'-0"

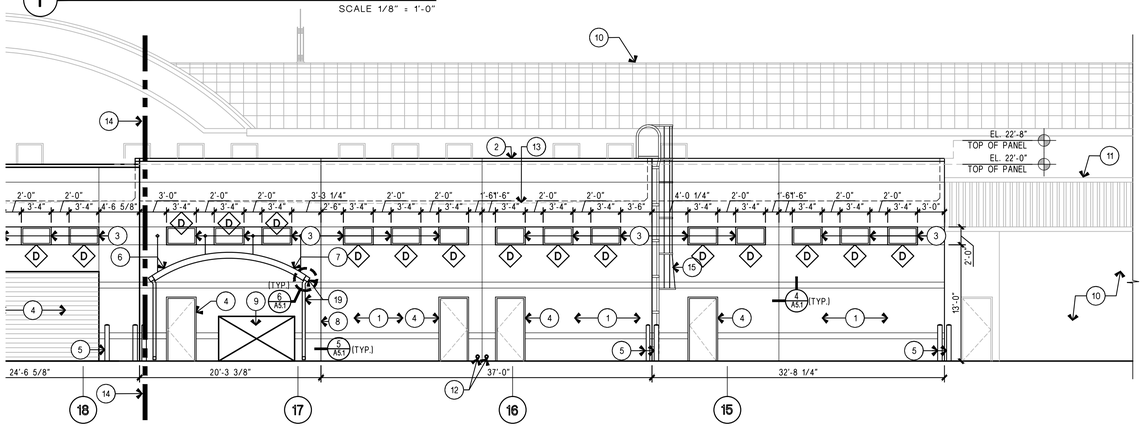

1 NORTH ELEVATION CONT.

SCALE 1/8" = 1'-0"

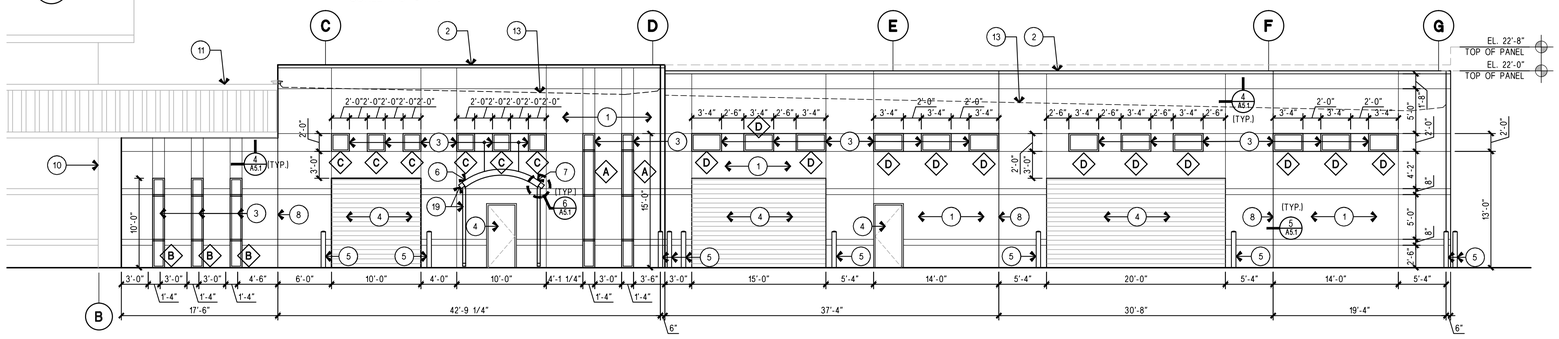

2 EAST ELEVATION

SCALE 1/8" = 1'-0"

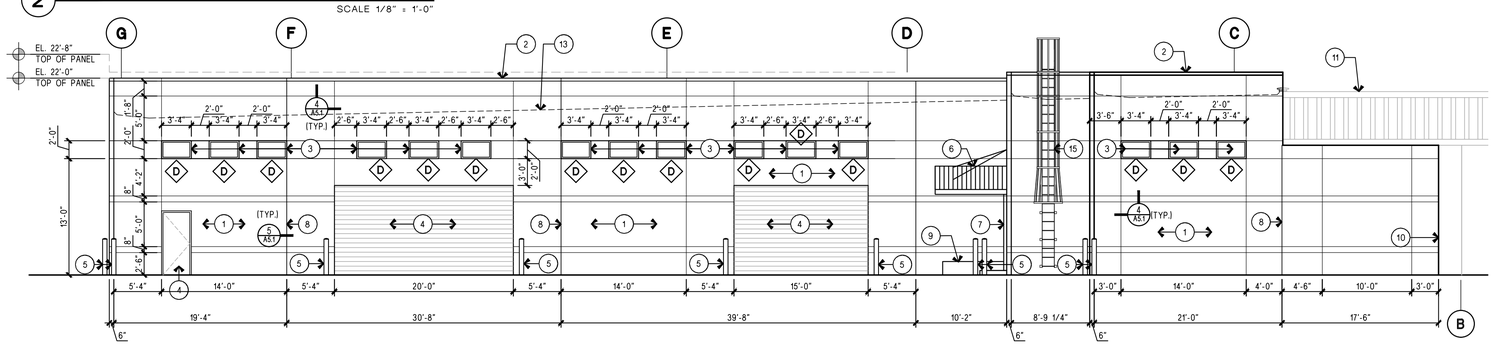

3 WEST ELEVATION

SCALE 1/8" = 1'-0"

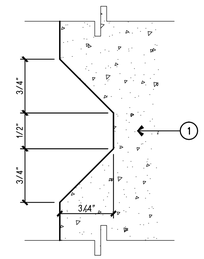

4 VERT. / HOR. PANEL REVEAL DTL.

N.T.S.

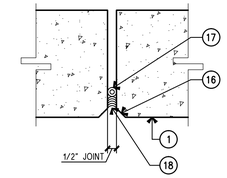

5 VERT. PANEL JOINT DTL.

SCALE: 3"=1'-0"

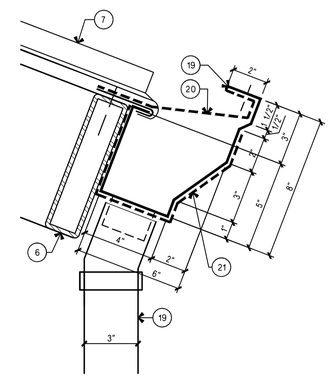

6 GUTTER DETAIL

SCALE: 3"=1'-0"

KEYED NOTES

1. PRECAST CONCRETE PANEL WITH ELASTOMERIC COATING.
2. 16 OZ. COPPER COPING WITH PATINA FINISH TO MATCH EXISTING.
3. WINDOW AS SCHEDULED.
4. DOOR AS SCHEDULED.
5. BOLLARDS.
6. OVERHANG STEEL TUBE CANOPY STRUCTURE, SEE STRUCTURAL DRAWINGS - PAINTED.
7. 16 OZ. STANDING SEAM COPPER ROOF PANEL SYSTEM WITH PATINA FINISH TO MATCH EXISTING.
8. PANEL JOINT.
9. WALL OPENING FOR CONVEYOR BELT.
10. EXISTING BUILDING.
11. EXISTING FASCIA PANEL.
12. OVER FLOW AND ROOF DRAIN NOZZLES.
13. ROOF LINE BEYOND.
14. MATCHLINE.
15. STEEL LADDER AND CAGE.
16. 1/2" CHAMFER TYPICAL.
17. BACKER ROD.
18. CONT. SEALANT.
19. COPPER GUTTER AND LEADER WITH PATINA FINISH TO MATCH EXISTING.
20. 1/8"X1" GALVANIZED STEEL HANGER @ 3'-0" O.C. MAX. - PAINTED.
21. 1/8"X1" GALVANIZED STEEL GUTTER BRACKET @ 3'-0" O.C. MAX. - PAINTED.

LEGEND

1 SEE KEYED NOTES

REFERENCES -- BENCHMARK

DATE	REVISIONS	BY

CONSULTANT'S NAME

mijares ● mora
ARCHITECTS INC.
EL PASO, TEXAS 79912
111 N. FESTIVAL
TEL 915-542-1991
FAX 542-1994

ARCHITECT'S SEAL

REGISTERED ARCHITECT
JORGE L. MORA
12526
STATE OF TEXAS
DATE 5-31-16

SCALE

DATE	MAY 2016
DESIGN BY	MM/RMP
DRAWN BY	S.D.
CHKD. BY	S.D.
APPD. BY	JLM
JOB NO.	1603

PROJECT NAME

EL PASO INTERNATIONAL AIRPORT
CHECKED BAGGAGE INSPECTION SYSTEM

6701 CONVAIR RD. EL PASO, TEXAS

EL PASO INTERNATIONAL AIRPORT

CITY OF EL PASO

SHEET TITLE

BUILDING ELEVATIONS

A5.1

FILE NO. 238512

SHEET___OF___

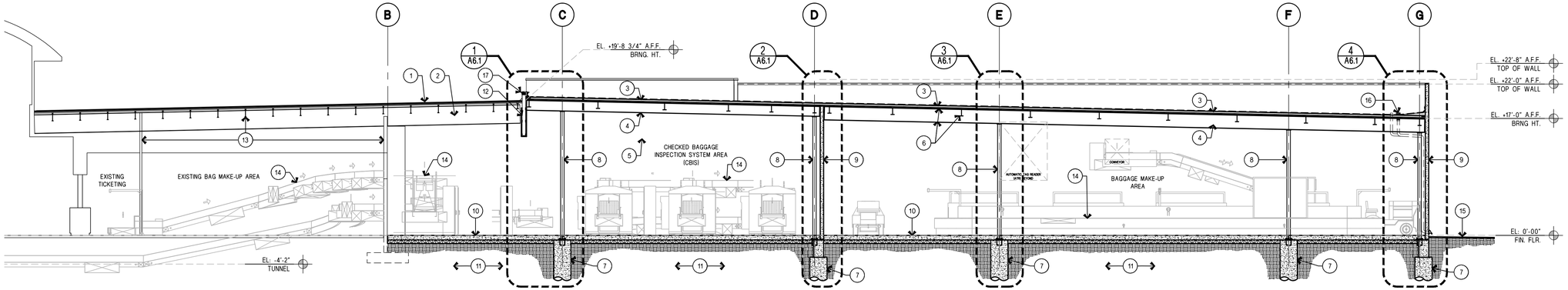

1 BUILDING SECTION

SCALE 1/8" = 1'-0"

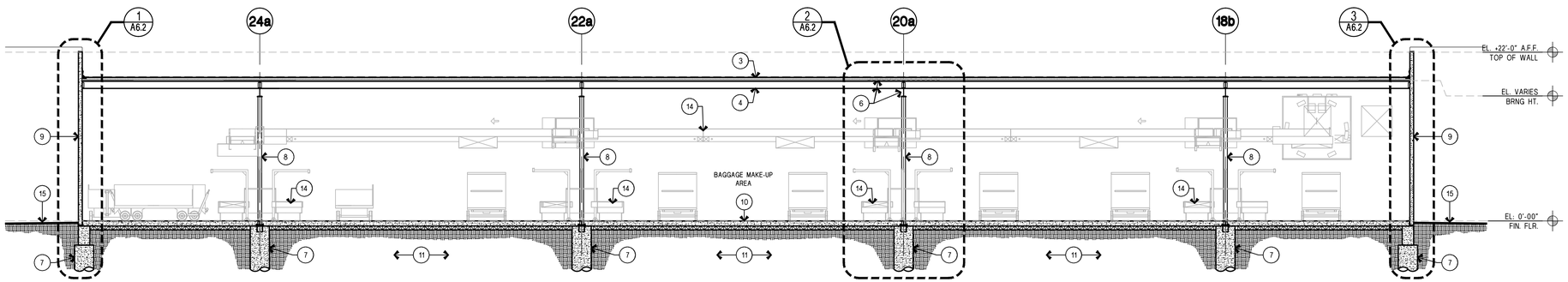

2 BUILDING SECTION

SCALE 1/8" = 1'-0"

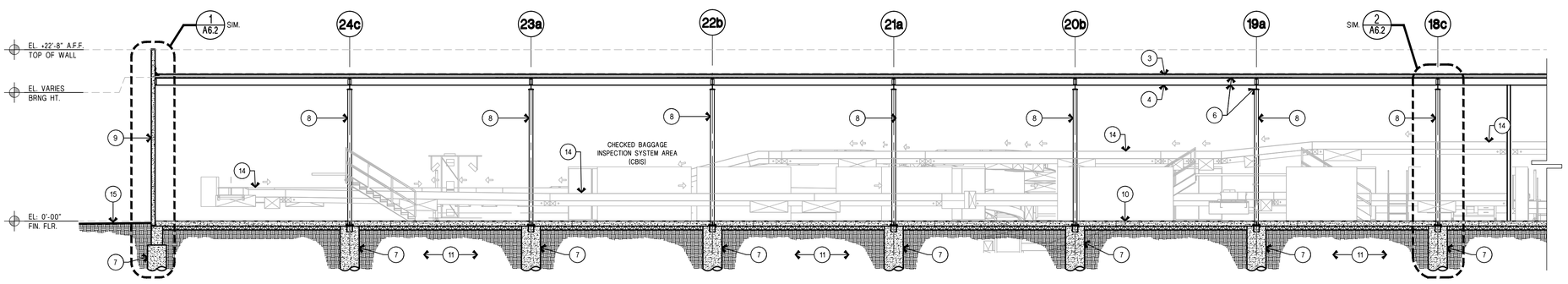

3 BUILDING SECTION

SCALE 1/8" = 1'-0"

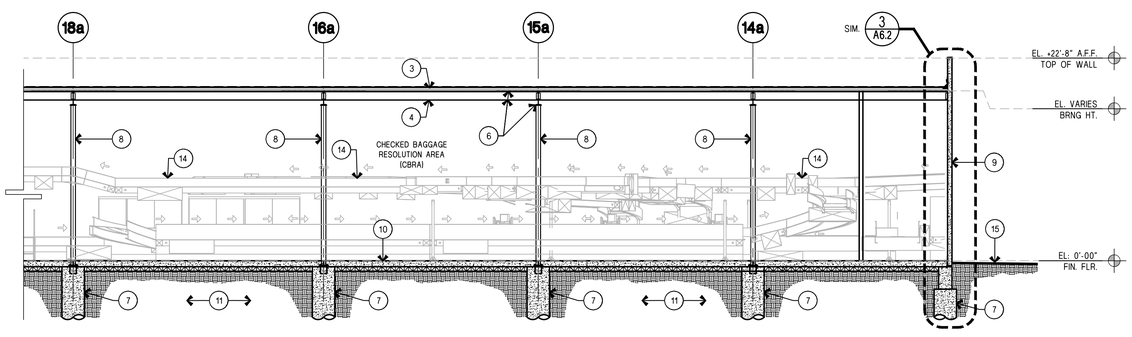

3 BUILDING SECTION - CONTINUE

SCALE 1/8" = 1'-0"

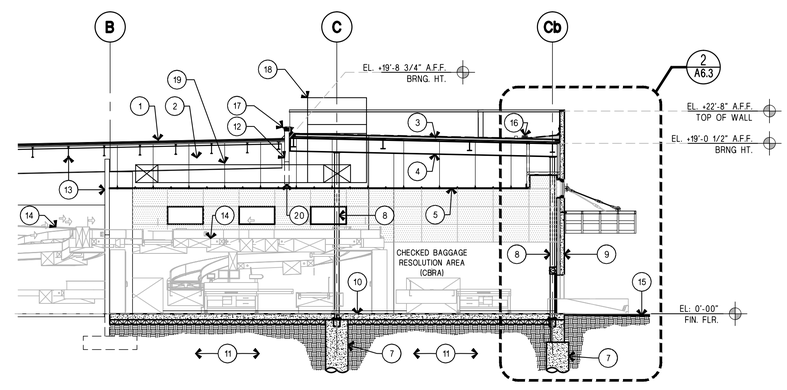

4 BUILDING SECTION

SCALE 1/8" = 1'-0"

KEYED NOTES

1. EXISTING ROOF.
2. EXISTING STRUCTURE.
3. SINGLE PLY ROOFING SYSTEM AS SPECIFIED.
4. STEEL STRUCTURE. SEE STRUCTURAL DRAWINGS.
5. CEILING AS SCHEDULED.
6. PAINTED STEEL STRUCTURE AT OVERHEAD CANOPY. SEE STRUCTURAL DRAWINGS.
7. CONCRETE FOOTING. SEE STRUCTURAL.
8. STEEL COLUMN. SEE STRUCTURAL.
9. PRECAST CONCRETE PANEL, SEE STRUCTURAL.
10. CONCRETE SLAB, SEE STRUCTURAL.
11. COMPACTED ENGINEERED FILL.
12. EXISTING CONCRETE FASCIA PANEL TO REMAIN.
13. EXISTING BUILDING STRUCTURE TO REMAIN.
14. BAGGAGE CONVEYOR SYSTEM. SEE "B" SERIES DRAWINGS.
15. FINISH GRADE, SEE CIVIL.
16. ROOF DRAIN AND OVER FLOW, SEE ROOF PLAN FOR LOCATION.
17. EXPANSION JOINT COVER.
18. MECHANICAL UNIT, SEE MECHANICAL DRAWINGS.
19. DUCT, SEE MECHANICAL DRAWINGS.
20. CUT PORTION OF EXISTING CONCRETE FASCIA PANEL TO ACCOMMODATE NEW DUCT WORK, SEE MECHANICAL DRAWINGS.

LEGEND

(1) SEE KEYED NOTES

GENERAL NOTES

A. FOR FIREPROOFING SPRAY APPLICATION WHERE THE STRUCTURE IS EXPOSED, SEE FIREPROOFING GENERAL NOTES ON SHEET FP.1

REFERENCES -- BENCHMARK

DATE	REVISIONS	BY

CONSULTANT'S NAME

mijares ● mora
ARCHITECTS INC.
EL PASO, TEXAS 79912
111 N. FESTIVAL
TEL: 915-542-1991
FAX: 542-7934

ARCHITECT'S SEAL

REGISTERED ARCHITECT JORGE L. MORA 12526 STATE OF TEXAS

DATE 5-31-16

SCALE

DATE	MAY 2016
DESIGN BY	MM/RP
DRAWN BY	S.D.
CHKD. BY	S.D.
APPD. BY	JLM
JOB NO.	1603

PROJECT NAME

EL PASO INTERNATIONAL AIRPORT
CHECKED BAGGAGE INSPECTION SYSTEM

6701 CONVAIR RD. EL PASO, TEXAS

EL PASO INTERNATIONAL AIRPORT

CITY OF EL PASO

SHEET TITLE

BUILDING SECTIONS

A5.2

FILE NO. 238512

SHEET___OF___

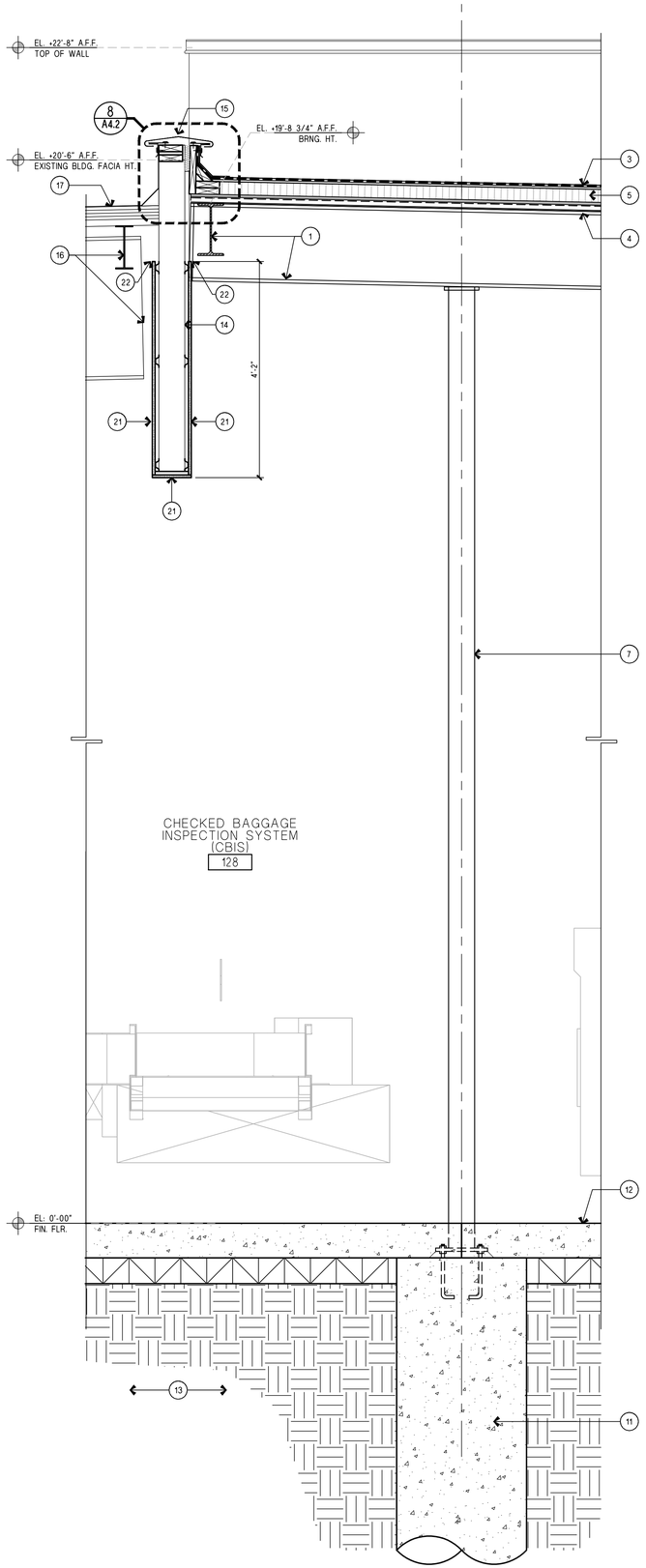

1 WALL SECTION

SCALE 3/4" = 1'-0"

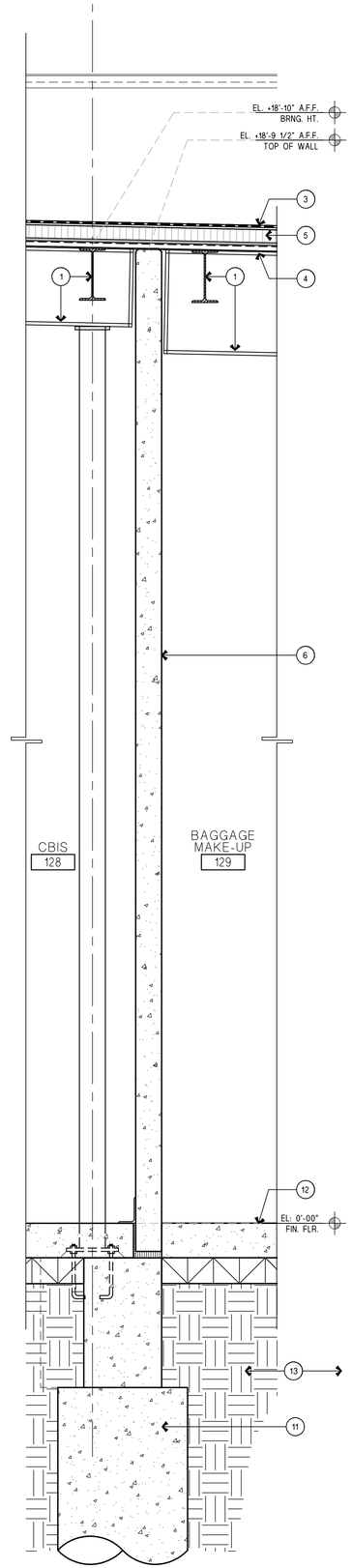

2 WALL SECTION

SCALE 3/4" = 1'-0"

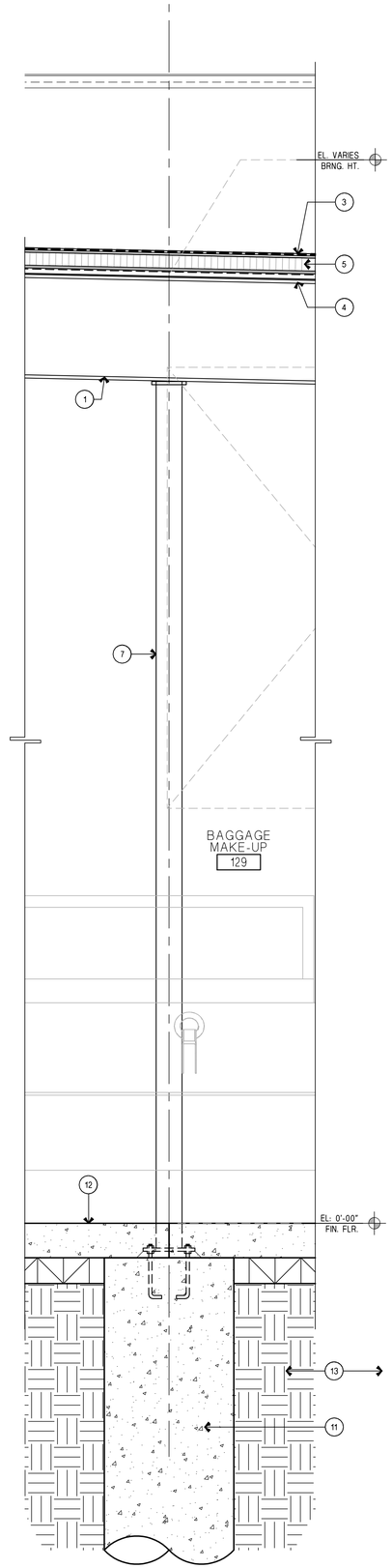

3 WALL SECTION

SCALE 3/4" = 1'-0"

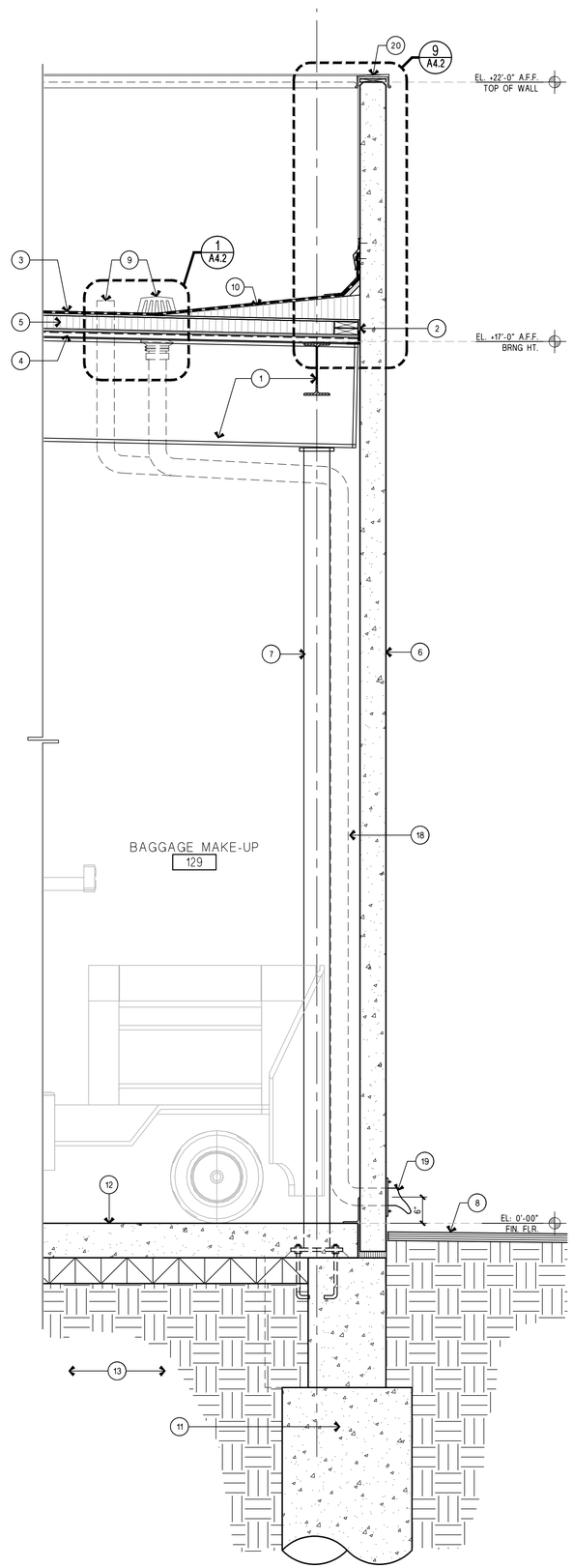

4 WALL SECTION

SCALE 3/4" = 1'-0"

KEYED NOTES

1. STEEL BEAM. SEE STRUCTURAL DRAWINGS.
2. STEEL CLOSURE ANGLE. SEE STRUCTURAL DRAWINGS.
3. ROOFING SYSTEM. SEE ROOF PLAN AND DETAILS.
4. METAL DECK. SEE STRUCTURAL DRAWINGS.
5. ROOF INSULATION. SEE ROOF PLAN AND DETAILS.
6. PRECAST CONCRETE PANEL. SEE STRUCTURAL DRAWINGS.
7. STEEL COLUMN, SEE STRUCTURAL DRAWINGS
8. FINISH GRADE, SEE CIVIL DRAWINGS.
9. OVERFLOW AND ROOF DRAIN, SEE ROOF PLAN AND DETAILS.
10. BUILT UP CRICKET.
11. CONCRETE FOOTING, SEE STRUCTURAL DRAWINGS.
12. CONCRETE FLOOR SLAB, SEE STRUCTURAL DWGS.
13. COMPACTED ENGINEERED FILL, SEE STRUCT. DWGS
14. EXISTING CONCRETE FASCIA PANEL TO REMAIN.
15. EXPANSION JOINT COVER.
16. EXISTING STEEL BEAM TO REMAIN.
17. EXISTING ROOF TO REMAIN.
18. ROOF DRAIN AND OVER FLOW LEADER PIPES, REFER TO PLUMBING DRAWINGS.
19. ROOF DRAIN AND OVER FLOW PIPES NOZZLES.
20. COPPER COPING WITH PATINA FINISH TO MATCH EXISTING.
21. 5/8" GYPSUM BOARD OVER 7/8" HAT CHANNELS @ 24" O.C. TAPED, TEXTURE AND PAINTED.
22. J-MOLDING.

LEGEND

(1) SEE KEYED NOTES

GENERAL NOTES

A. FOR FIREPROOFING SPRAY APPLICATION WHERE THE STRUCTURE IS EXPOSED, SEE FIREPROOFING GENERAL NOTES ON SHEET FP.1

REFERENCES -- BENCHMARK

DATE	REVISIONS	BY

CONSULTANT'S NAME

mijares ● mora
ARCHITECTS INC.
EL PASO, TEXAS 79912
FAX: 542-7984
111 N. FESTIVAL
TEL: 915-542-1991

ARCHITECT'S SEAL

REGISTERED ARCHITECT
JORGE L. MORA
12526
STATE OF TEXAS
DATE 5-31-16

SCALE

DATE	MAY 2016
DESIGN BY	MM/JRP
DRAWN BY	S.D.
CHKD. BY	S.D.
APPD. BY	JLM
JOB NO.	1603

PROJECT NAME

EL PASO INTERNATIONAL AIRPORT
CHECKED BAGGAGE INSPECTION SYSTEM

6701 CONVAIR RD. EL PASO, TEXAS

EL PASO INTERNATIONAL AIRPORT

CITY OF EL PASO

SHEET TITLE

WALL SECTIONS

A6.1

FILE NO. 238512

SHEET___OF___

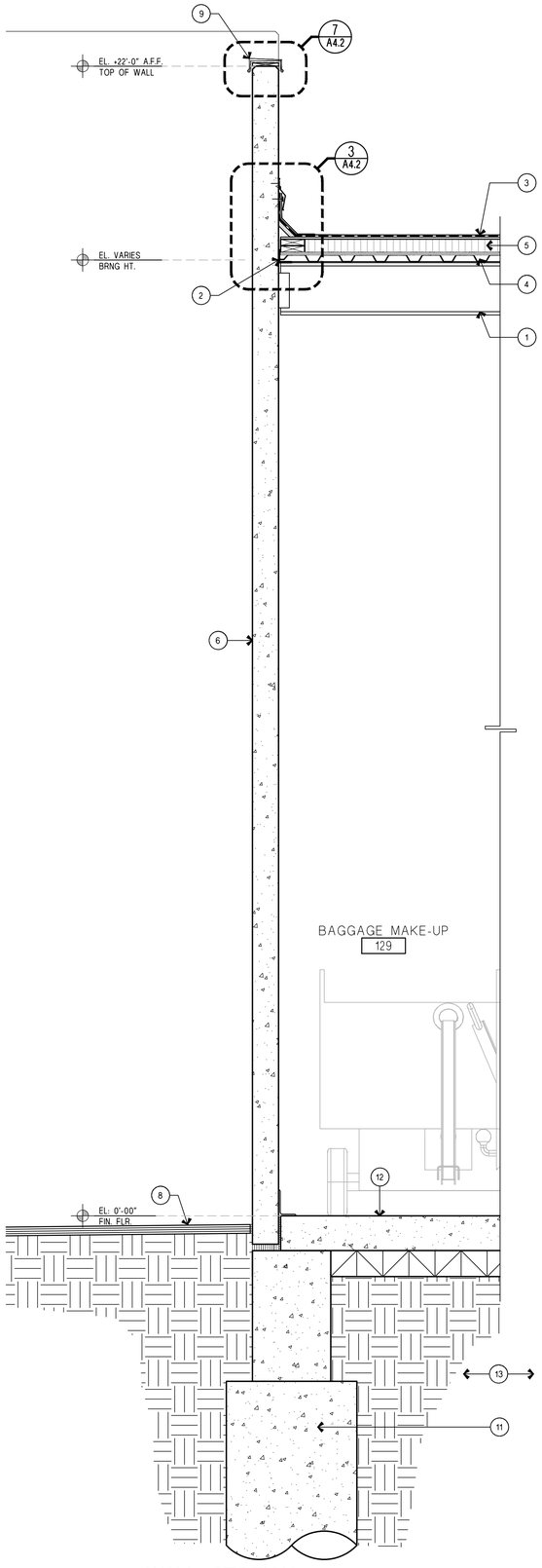

1 WALL SECTION

SCALE 3/4" = 1'-0"

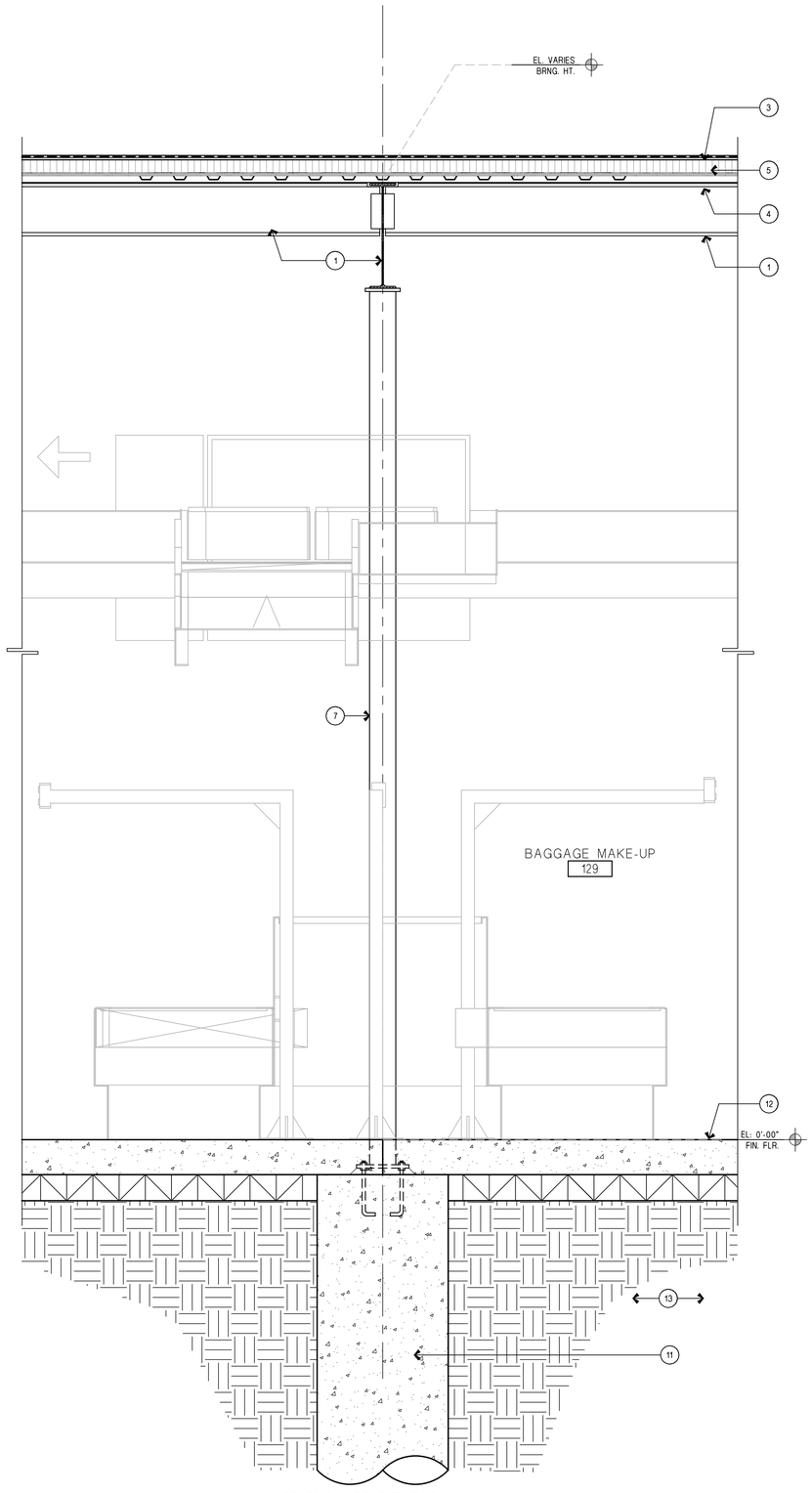

2 WALL SECTION

SCALE 3/4" = 1'-0"

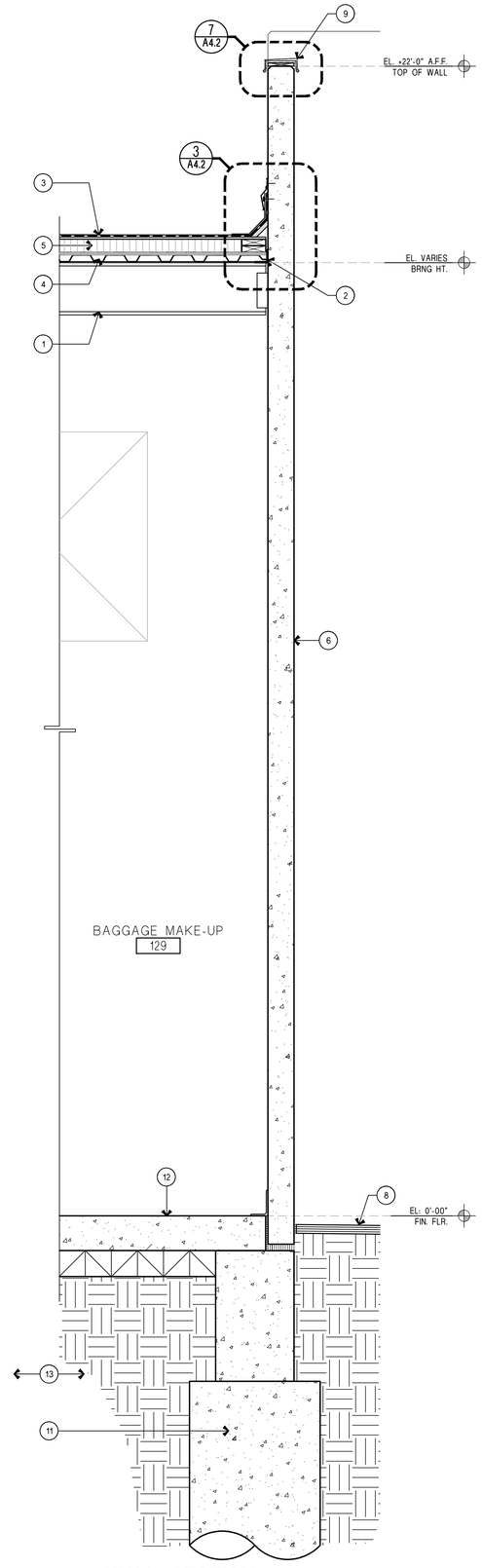

3 WALL SECTION

SCALE 3/4" = 1'-0"

KEYED NOTES

1. STEEL BEAM. SEE STRUCTURAL DRAWINGS.
2. STEEL CLOSURE ANGLE. SEE STRUCTURAL DRAWINGS.
3. ROOFING SYSTEM. SEE ROOF PLAN AND DETAILS.
4. METAL DECK. SEE STRUCTURAL DRAWINGS.
5. ROOF INSULATION. SEE ROOF PLAN AND DETAILS.
6. PRECAST CONCRETE PANEL. SEE STRUCTURAL DRAWINGS.
7. STEEL COLUMN, SEE STRUCTURAL DRAWINGS
8. FINISH GRADE, SEE CIVIL DRAWINGS.
9. COPPER COPING WITH PATINA FINISH TO MATCH EXISTING.
10. BUILT UP CRICKET.
11. CONCRETE FOOTING, SEE STRUCTURAL DRAWINGS.
12. CONCRETE FLOOR SLAB, SEE STRUCTURAL DWGS.
13. COMPACTED ENGINEERED FILL, SEE STRUCT. DWGS

LEGEND

(1) SEE KEYED NOTES

GENERAL NOTES

A. FOR FIREPROOFING SPRAY APPLICATION WHERE THE STRUCTURE IS EXPOSED, SEE FIREPROOFING GENERAL NOTES ON SHEET FP.1

REFERENCES -- BENCHMARK

DATE	REVISIONS	BY

CONSULTANT'S NAME

mijares mora
ARCHITECTS INC.
111 N. FESTIVAL
TEL: 915-542-1991
EL PASO, TEXAS 79912
FAX: 542-1994

ARCHITECT'S SEAL

REGISTERED ARCHITECT
JORGE L. MORA
12526
STATE OF TEXAS
DATE 5-31-16

SCALE

DATE	MAY 2016
DESIGN BY	MM/RMP
DRAWN BY	S.D.
CHKD. BY	S.D.
APPD. BY	JLM
JOB NO.	1603

PROJECT NAME

EL PASO INTERNATIONAL AIRPORT
CHECKED BAGGAGE INSPECTION SYSTEM

6701 CONVAIR RD. EL PASO, TEXAS

EL PASO INTERNATIONAL

CITY OF EL PASO

SHEET TITLE

WALL SECTIONS

A6.2

FILE NO. 238512

SHEET___OF___

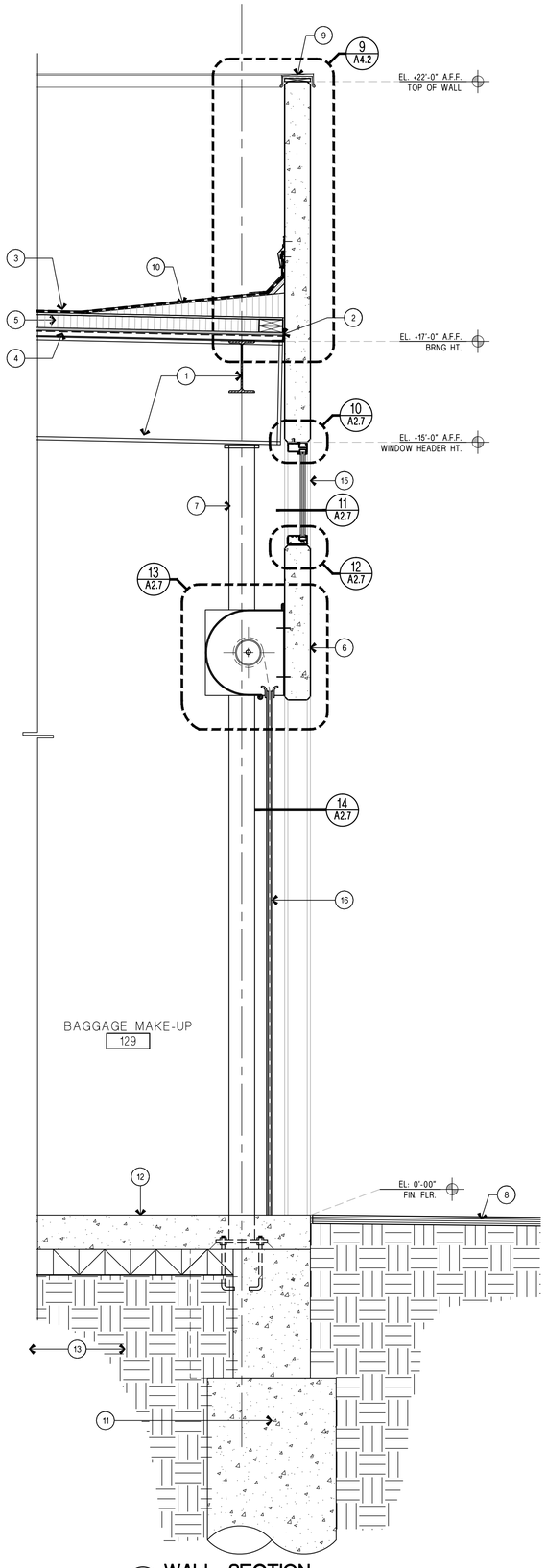

1 WALL SECTION

SCALE 3/4" = 1'-0"

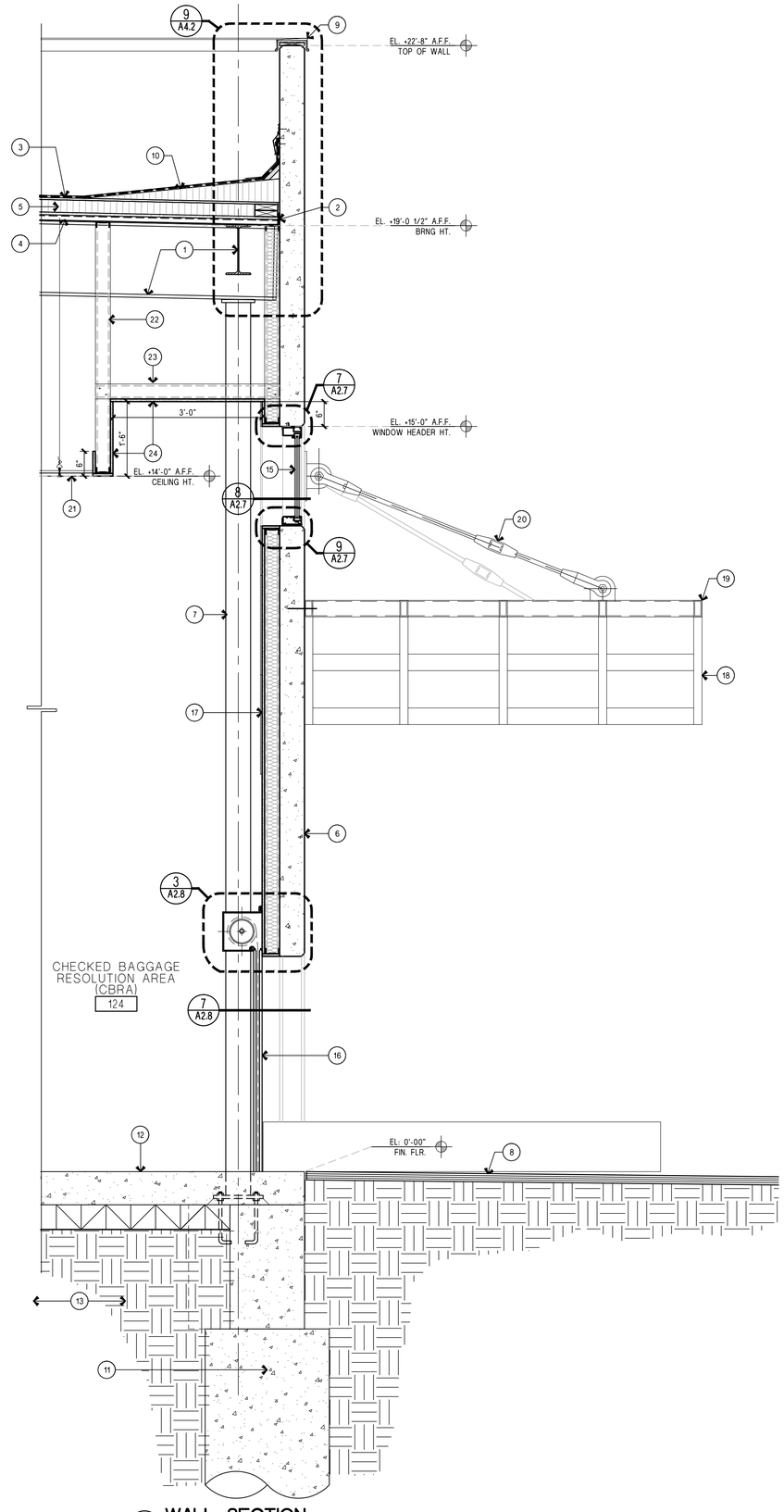

2 WALL SECTION

SCALE 3/4" = 1'-0"

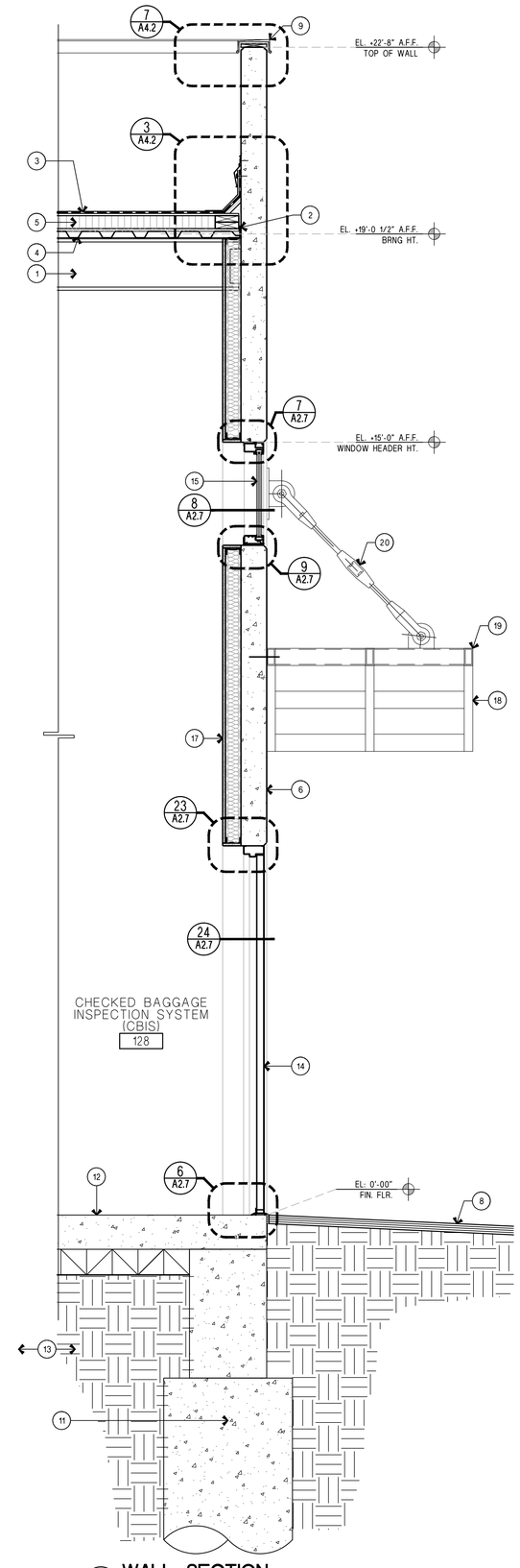

3 WALL SECTION

SCALE 3/4" = 1'-0"

KEYED NOTES

1. STEEL BEAM. SEE STRUCTURAL DRAWINGS.
2. STEEL CLOSURE ANGLE. SEE STRUCTURAL DRAWINGS.
3. ROOFING SYSTEM. SEE ROOF PLAN AND DETAILS.
4. METAL DECK. SEE STRUCTURAL DRAWINGS.
5. ROOF INSULATION. SEE ROOF PLAN AND DETAILS.
6. PRECAST CONCRETE PANEL. SEE STRUCTURAL DRAWINGS.
7. STEEL COLUMN, SEE STRUCTURAL DRAWINGS
8. FINISH GRADE, SEE CIVIL DRAWINGS.
9. COPPER COPING WITH PATINA FINISH TO MATCH EXISTING.
10. BUILT UP CRICKET.
11. CONCRETE FOOTING, SEE STRUCTURAL DRAWINGS.
12. CONCRETE FLOOR SLAB, SEE STRUCTURAL DWGS.
13. COMPACTED ENGINEERED FILL, SEE STRUCT. DWGS
14. DOOR AS SCHEDULED.
15. WINDOW AS SCHEDULED.
16. OVERHEAD ROLLING DOOR AS SCHEDULED.
17. FURROUT PARTITION, SEE FLOOR PLAN FOR WALL TYPE.
18. OVERHANG STEEL TUBE CANOPY STRUCTURE - PAINTED, SEE STRUCTURAL DRAWINGS.
19. STANDING SEAM COPPER ROOF PANEL SYSTEM AS SPECIFIED WITH PATINA FINISH TO MATCH EXISTING.
20. SUSPENSION RODS AND STEEL PLATES, SEE STRUCTURAL DRAWINGS.
21. LAY-IN SUSPENDED CEILING SYSTEM AS SCHEDULED.
22. 3-5/8" X 20 GA. HANGER STUDS TO METAL DECK @ 24" O.C. BRACE AS REQUIRED.
23. 3-5/8" X 20 GA. METAL STUDS @ 24" O.C.
24. 5/8" GYPSUM BOARD, TAPED, TEXTURE AND PAINTED.

LEGEND

(1) SEE KEYED NOTES

GENERAL NOTES

A. FOR FIREPROOFING SPRAY APPLICATION WHERE THE STRUCTURE IS EXPOSED, SEE FIREPROOFING GENERAL NOTES ON SHEET FP.1

REFERENCES -- BENCHMARK

DATE	REVISIONS	BY

CONSULTANT'S NAME

mijares ● mora
ARCHITECTS INC.
EL PASO, TEXAS 79912
FAX: 542-1984
111 N. FESTIVAL
TEL: 915-542-1991

ARCHITECT'S SEAL

REGISTERED ARCHITECT
JORGE L. MORA
12526
STATE OF TEXAS
DATE 5-31-16

SCALE

DATE	MAY 2016
DESIGN BY	MM/RMP
DRAWN BY	S.D.
CHKD. BY	S.D.
APPD. BY	JLM
JOB NO.	1603

PROJECT NAME

EL PASO INTERNATIONAL AIRPORT
CHECKED BAGGAGE INSPECTION SYSTEM

6701 CONVAIR RD. EL PASO, TEXAS

EL PASO INTERNATIONAL AIRPORT

CITY OF EL PASO

SHEET TITLE

WALL SECTIONS

A6.3

FILE NO. 238512

SHEET___OF___

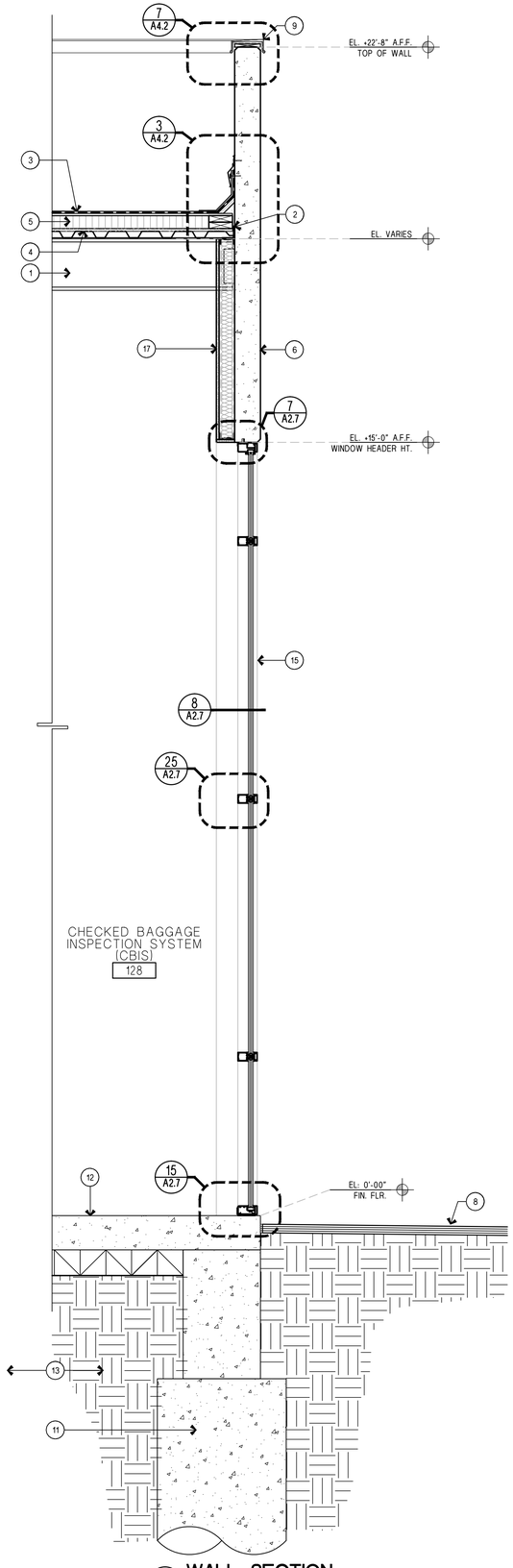

1 WALL SECTION

SCALE 3/4" = 1'-0"

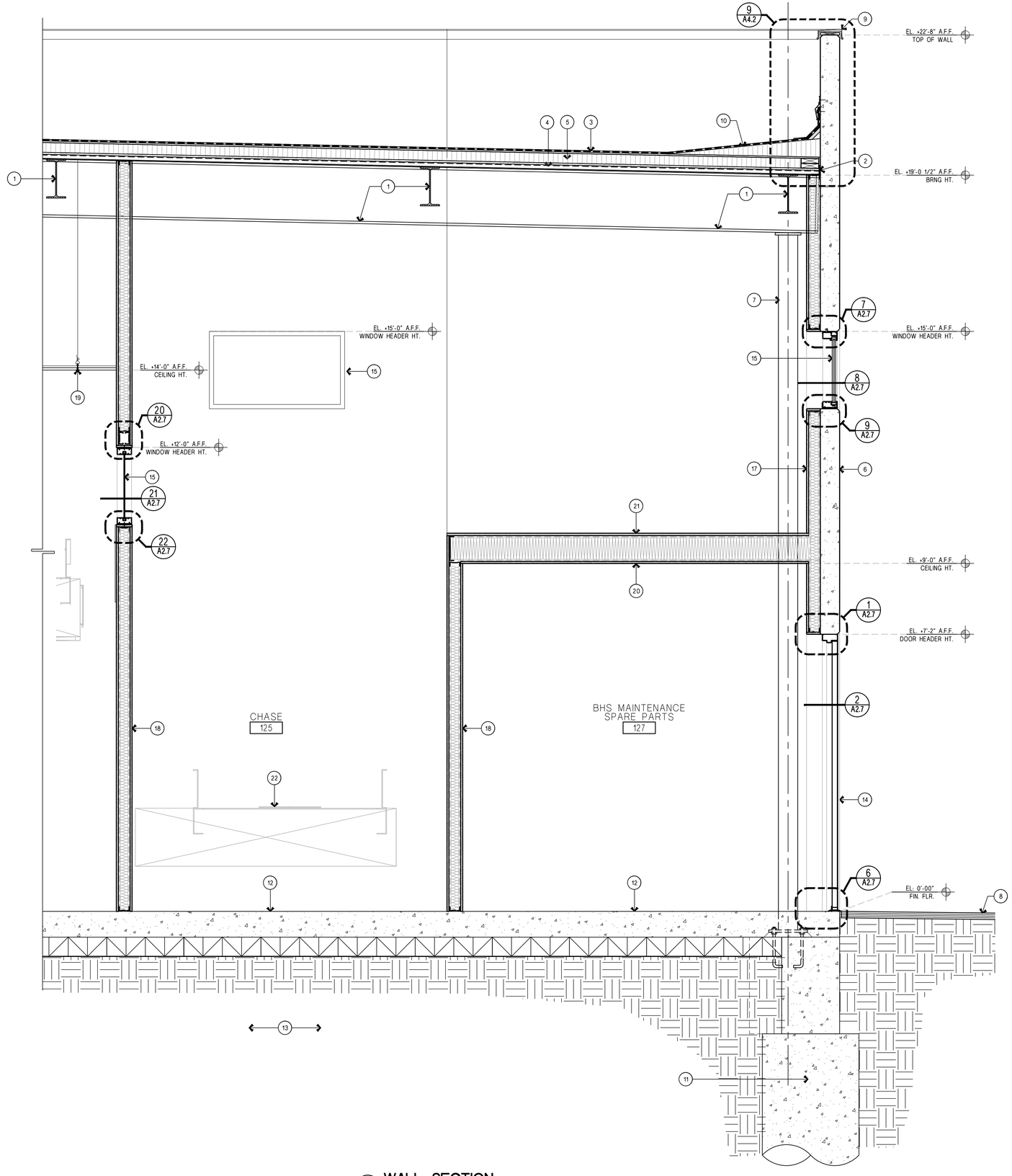

2 WALL SECTION

SCALE 3/4" = 1'-0"

KEYED NOTES

1. STEEL BEAM. SEE STRUCTURAL DRAWINGS.
2. STEEL CLOSURE ANGLE. SEE STRUCTURAL DRAWINGS.
3. ROOFING SYSTEM. SEE ROOF PLAN AND DETAILS.
4. METAL DECK. SEE STRUCTURAL DRAWINGS.
5. ROOF INSULATION. SEE ROOF PLAN AND DETAILS.
6. PRECAST CONCRETE PANEL. SEE STRUCTURAL DRAWINGS.
7. STEEL COLUMN, SEE STRUCTURAL DRAWINGS
8. FINISH GRADE, SEE CIVIL DRAWINGS.
9. COPPER COPING WITH PATINA FINISH TO MATCH EXISTING.
10. BUILT UP CRICKET.
11. CONCRETE FOOTING, SEE STRUCTURAL DRAWINGS.
12. CONCRETE FLOOR SLAB, SEE STRUCTURAL DWGS.
13. COMPACTED ENGINEERED FILL, SEE STRUCT. DWGS
14. DOOR AS SCHEDULED.
15. WINDOW AS SCHEDULED.
16. OVERHEAD ROLLING DOOR AS SCHEDULED.
17. FURROUT PARTITION, SEE FLOOR PLAN FOR WALL TYPE.
18. WALL PARTITION, SEE FLOOR PLAN FOR WALL TYPE.
19. CEILING SYSTEM AS SCHEDULED.
20. 5/8" GYPSUM BOARD OVER 8" METAL STUDS @ 16" O.C.
21. 3/4" PLYWOOD DECK AS SPECIFIED.
22. BAGGAGE CONVEYOR SYSTEM. SEE "B" SERIES DRAWINGS.

LEGEND

(1) SEE KEYED NOTES

GENERAL NOTES

A. FOR FIREPROOFING SPRAY APPLICATION WHERE THE STRUCTURE IS EXPOSED, SEE FIREPROOFING GENERAL NOTES ON SHEET FP.1

REFERENCES -- BENCHMARK

DATE	REVISIONS	BY

CONSULTANT'S NAME

mijares ● mora
ARCHITECTS INC.
EL PASO, TEXAS 79912
FAX: 542-1984
111 N. FESTIVAL
TEL: 915-542-1991

ARCHITECT'S SEAL

REGISTERED ARCHITECT
JORGE L. MORA
12526
STATE OF TEXAS
DATE 5-31-16

SCALE

DATE	MAY 2016
DESIGN BY	MM/RMP
DRAWN BY	S.D.
CHKD. BY	S.D.
APPD. BY	JLM
JOB NO.	1603

PROJECT NAME

EL PASO INTERNATIONAL AIRPORT
CHECKED BAGGAGE INSPECTION SYSTEM

6701 CONVAIR RD. EL PASO, TEXAS

EL PASO INTERNATIONAL AIRPORT

CITY OF EL PASO

SHEET TITLE

WALL SECTIONS

A6.4

FILE NO. 238512

SHEET___OF___

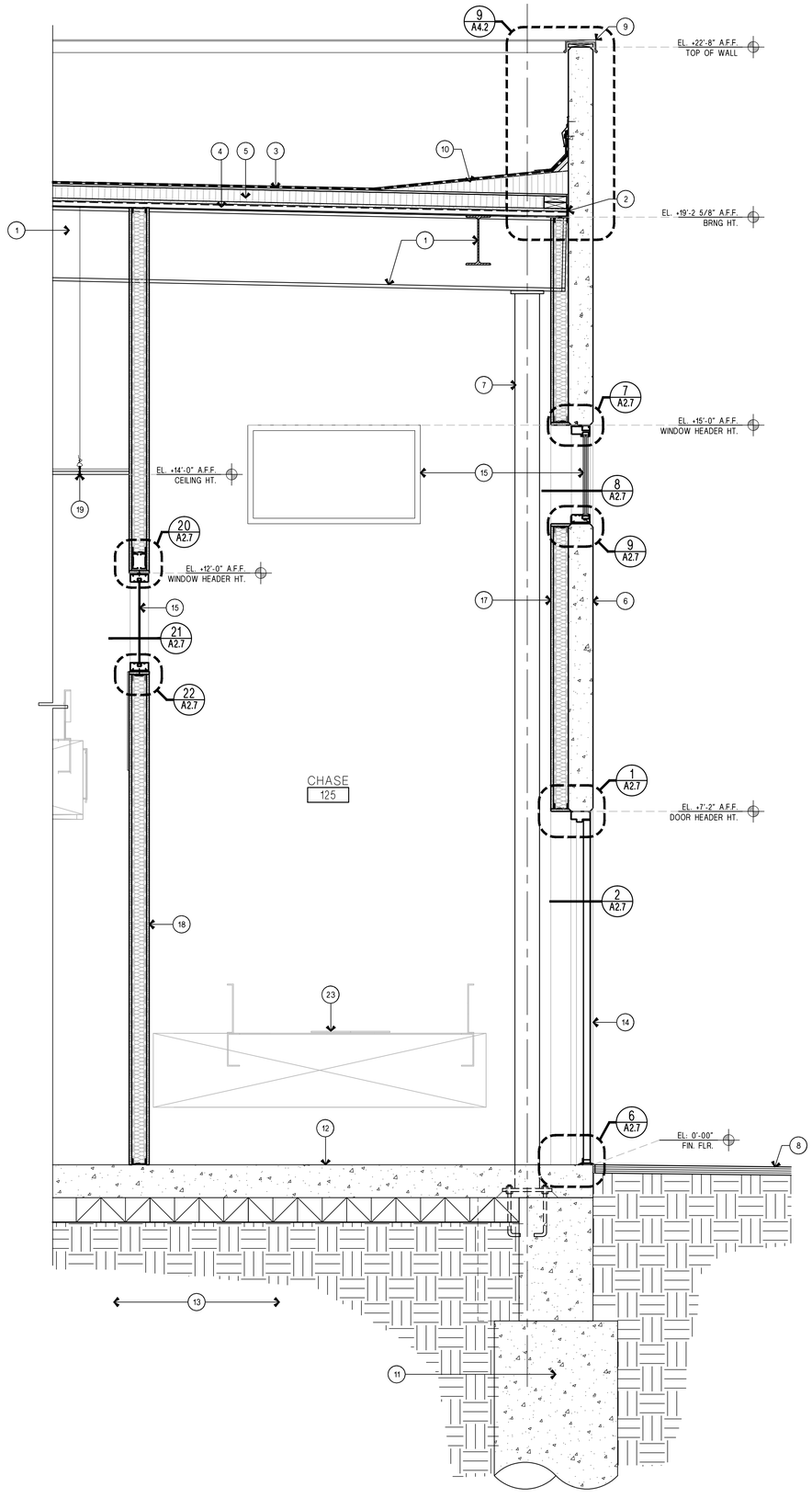

1 WALL SECTION

SCALE 3/4" = 1'-0"

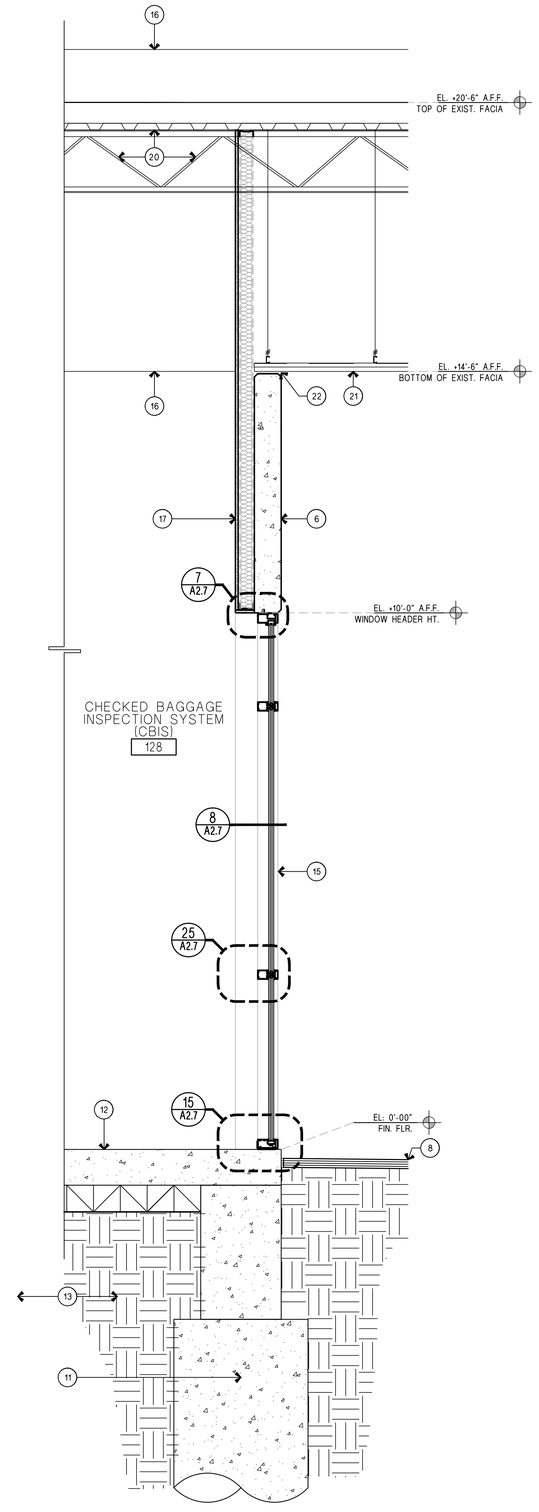

2 WALL SECTION

SCALE 3/4" = 1'-0"

KEYED NOTES

1. STEEL BEAM. SEE STRUCTURAL DRAWINGS.
2. STEEL CLOSURE ANGLE. SEE STRUCTURAL DRAWINGS.
3. ROOFING SYSTEM. SEE ROOF PLAN AND DETAILS.
4. METAL DECK. SEE STRUCTURAL DRAWINGS.
5. ROOF INSULATION. SEE ROOF PLAN AND DETAILS.
6. PRECAST CONCRETE PANEL. SEE STRUCTURAL DRAWINGS.
7. STEEL COLUMN, SEE STRUCTURAL DRAWINGS
8. FINISH GRADE, SEE CIVIL DRAWINGS.
9. COPPER COPING WITH PATINA FINISH TO MATCH EXISTING.
10. BUILT UP CRICKET.
11. CONCRETE FOOTING.
12. CONCRETE FLOOR SLAB.
13. COMPACTED ENGINEERED FILL.
14. DOOR AS SCHEDULED.
15. WINDOW AS SCHEDULED.
16. EXISTING CONCRETE FASCIA PANEL BEYOND.
17. FURROUT PARTITION, SEE FLOOR PLAN FOR WALL TYPE.
18. WALL PARTITION, SEE FLOOR PLAN FOR WALL TYPE.
19. CEILING SYSTEM AS SCHEDULED.
20. EXISTING STEEL STRUCTURE TO REMAIN.
21. EXISTING SOFFIT TO REMAIN.
22. SEALANT AS SPECIFIED.
23. BAGGAGE CONVEYOR SYSTEM. SEE "B" SERIES DRAWINGS.

LEGEND

(1) SEE KEYED NOTES

GENERAL NOTES

A. FOR FIREPROOFING SPRAY APPLICATION WHERE THE STRUCTURE IS EXPOSED, SEE FIREPROOFING GENERAL NOTES ON SHEET FP.1

REFERENCES -- BENCHMARK

DATE	REVISIONS	BY

CONSULTANT'S NAME

mijares ● mora
ARCHITECTS INC.
EL PASO, TEXAS 79912
111 N. FESTIVAL
TEL: 915-542-1991
FAX: 542-1994

ARCHITECT'S SEAL

REGISTERED ARCHITECT
JORGE L. MORA
12526
STATE OF TEXAS
DATE 5-31-16

SCALE

DATE	MAY 2016
DESIGN BY	MM/JRP
DRAWN BY	S.D.
CHKD. BY	S.D.
APPD. BY	JLM
JOB NO.	1603

PROJECT NAME

EL PASO INTERNATIONAL AIRPORT
CHECKED BAGGAGE INSPECTION SYSTEM

6701 CONVAIR RD. EL PASO, TEXAS

EL PASO INTERNATIONAL AIRPORT

CITY OF EL PASO

SHEET TITLE

WALL SECTIONS

A6.5

FILE NO. 238512

SHEET ___ OF ___

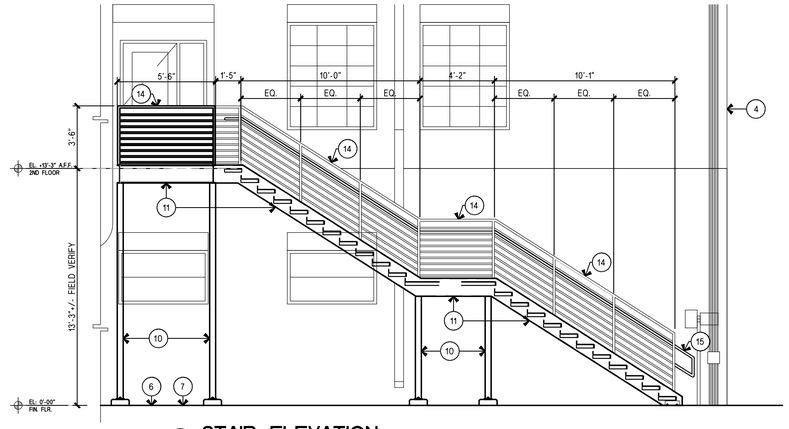

1 STAIR ELEVATION

SCALE 1/4" = 1'-0"

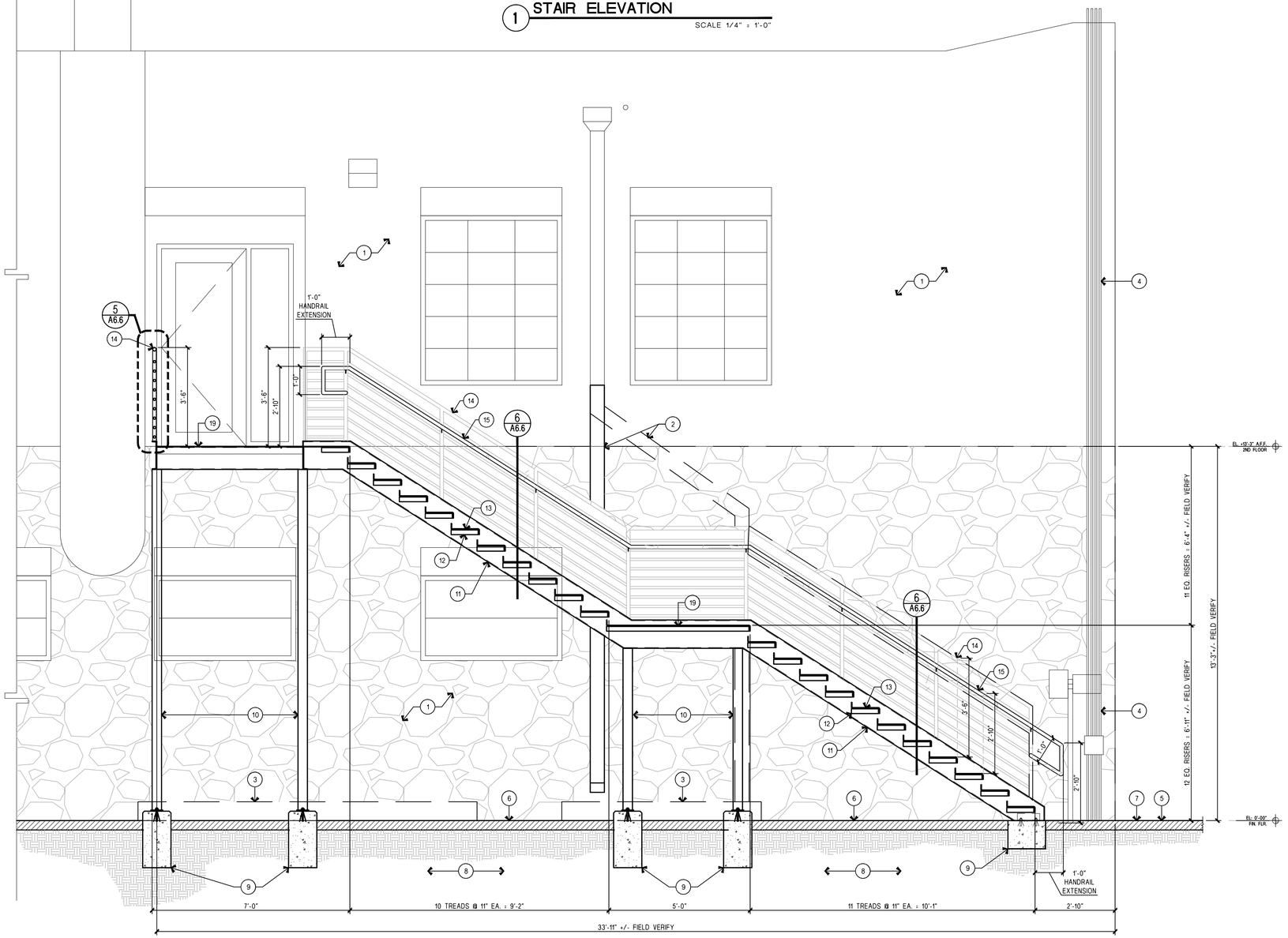

2 STAIR SECTION

SCALE 1/2" = 1'-0"

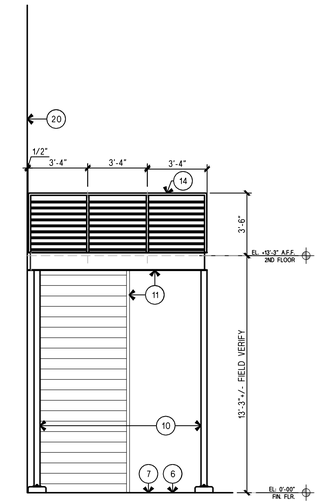

3 STAIR ELEVATION

SCALE 1/4" = 1'-0"

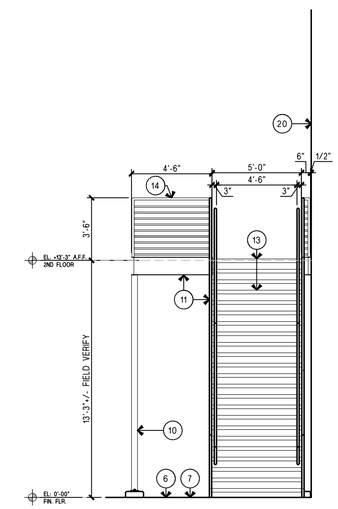

4 STAIR ELEVATION

SCALE 1/4" = 1'-0"

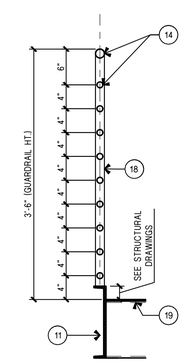

5 GUARDRAIL DTL.

SCALE 1" = 1'-0"

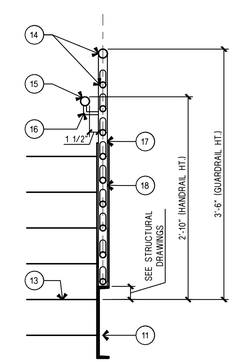

6 GUARDRAIL DTL.

SCALE 1" = 1'-0"

KEYED NOTES

1. EXISTING BUILDING TO REMAIN.
2. REMOVE PORTION OF EXISTING DOWN SPOUT LEADER AND RE-ROUTE AS SHOWN.
3. EXISTING CONCRETE PAD TO BE REMOVED.
4. EXISTING ELECTRICAL CONDUITS TO REMAIN.
5. FINISH GRADE, REFER TO CIVIL DRAWINGS.
6. ASPHALT PAVING, REFER TO CIVIL DRAWINGS.
7. CONCRETE WALK, REFER TO CIVIL DRAWINGS.
8. EXISTING UNDISTURBED SOIL.
9. CONCRETE FOOTING, REFER TO STRUCTURAL DRAWINGS.
10. STEEL COLUMN, REFER TO STRUCTURAL DRAWINGS (TYP.)
11. STAIR STRINGER, REFER TO STRUCTURAL DRAWINGS (TYP.)
12. CARRIER ANGLE, REFER TO STRUCTURAL DRAWINGS (TYP.)
13. STEEL CHECKERED PLATE STEPS, REFER TO STRUCTURAL DRAWINGS (TYP.)
14. 1-1/2" O.D. GALV. STEEL PIPE GUARDRAIL 42" HIGH W/ 1" O.D. INTERMEDIATE RAILS - PAINTED.
15. 1-1/2" O.D. GALV. STEEL PIPE HANDRAIL - PAINTED.
16. 1/2" ROUND METAL BRACKET AT POSTS WITH PAINT FINISH.
17. 1 1/2" STEEL POST WITH PAINT FINISH, SEE STAIR ELEVATIONS .
18. WELD ALL JOINTS, GRIND SMOOTH.
19. STEEL CHECKERED PLATE LANDING, REFER TO STRUCTURAL DRAWINGS (TYP.)
20. FACE OF EXISTING BUILDING.

LEGEND

1 SEE KEYED NOTES

REFERENCES -- BENCHMARK

DATE	REVISIONS	BY

CONSULTANT'S NAME

mijares ● mora
ARCHITECTS INC.
EL PASO, TEXAS 79912
111 N. FESTIVAL
TEL: 915-542-1991
FAX: 542-1994

ARCHITECT'S SEAL

REGISTERED ARCHITECT
JORGE L. MORA
12526
STATE OF TEXAS
DATE 5-31-16

SCALE

DATE	MAY 2016
DESIGN BY	MM/BRP
DRAWN BY	S.D.
CHKD. BY	S.D.
APPD. BY	JLM
JOB NO.	1603

PROJECT NAME

EL PASO INTERNATIONAL AIRPORT
CHECKED BAGGAGE INSPECTION SYSTEM

6701 CONVAIR RD. EL PASO, TEXAS

EL PASO INTERNATIONAL AIRPORT

CITY OF EL PASO

SHEET TITLE

STAIR ELEVATIONS AND SECTION

A6.6

FILE NO. 238512

SHEET__OF___

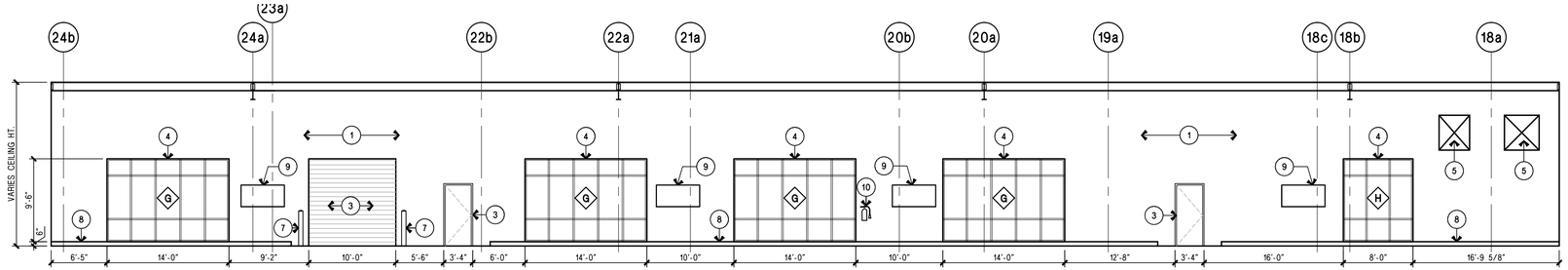

1 INTERIOR ELEVATION

SCALE: 1/8"=1'-0"

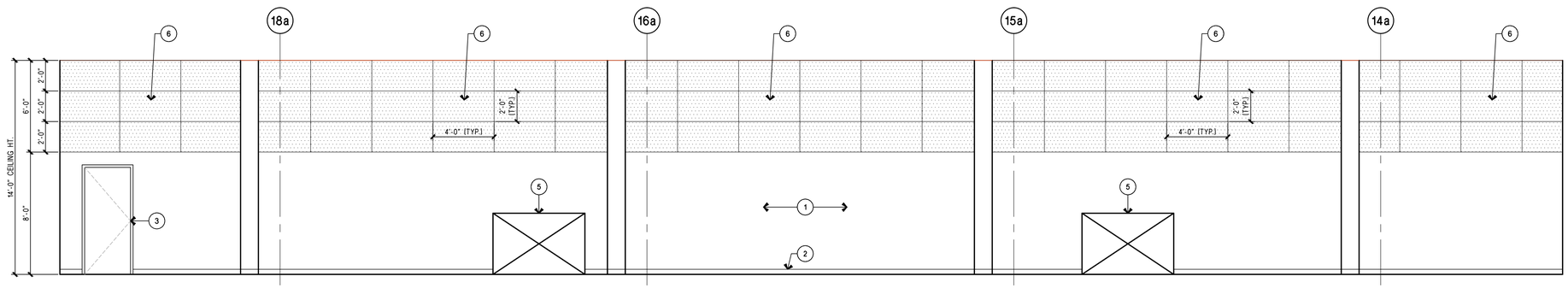

2 INTERIOR ELEVATION

SCALE: 1/4"=1'-0"

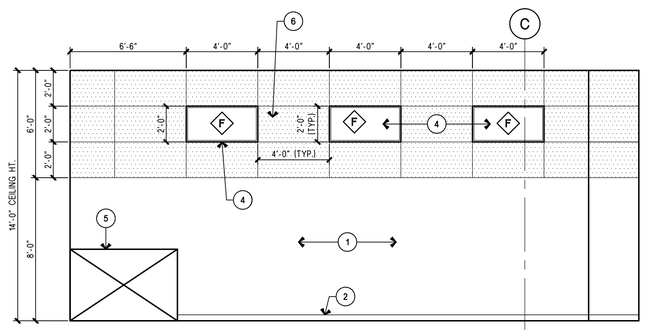

3 INTERIOR ELEVATION

SCALE: 1/4"=1'-0"

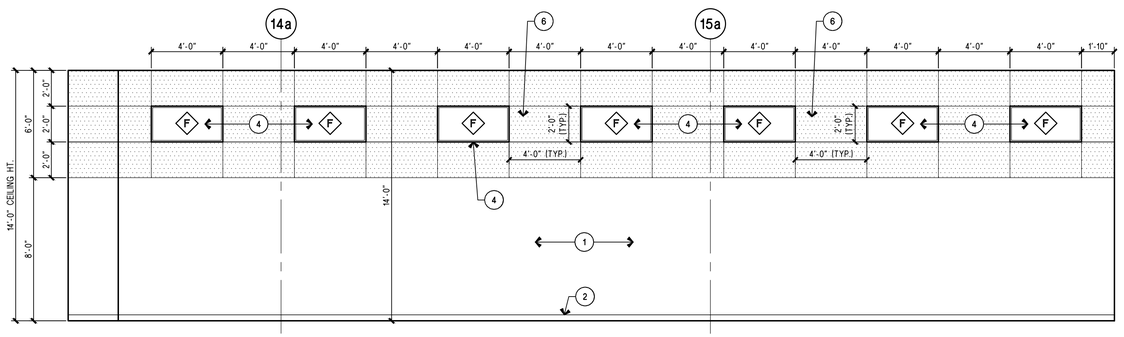

4 INTERIOR ELEVATION

SCALE: 1/4"=1'-0"

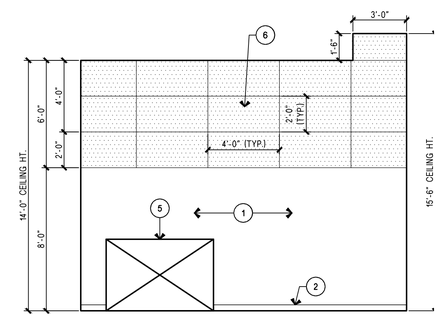

5 INTERIOR ELEVATION

SCALE: 1/4"=1'-0"

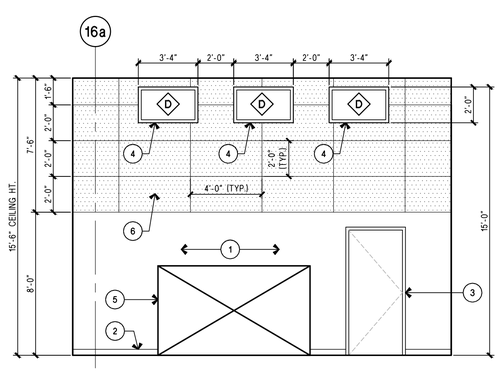

6 INTERIOR ELEVATION

SCALE: 1/4"=1'-0"

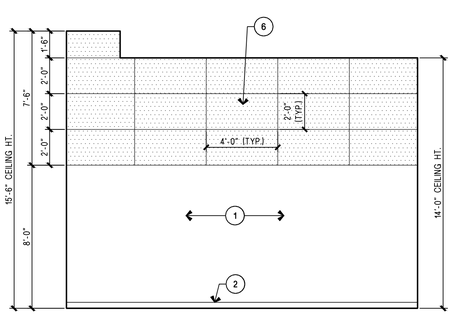

7 INTERIOR ELEVATION

SCALE: 1/4"=1'-0"

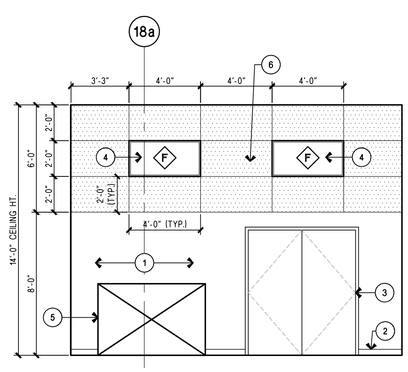

8 INTERIOR ELEVATION

SCALE: 1/4"=1'-0"

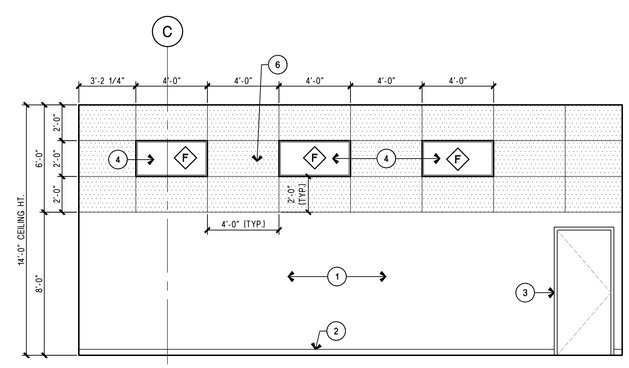

9 INTERIOR ELEVATION

SCALE: 1/4"=1'-0"

KEYED NOTES

1. WALL FINISH AS SCHEDULED - REFER TO ROOM FINISH SCHEDULE.
2. BASE AS SCHEDULED.
3. DOOR AS SCHEDULED.
4. WINDOW AS SCHEDULED.
5. WALL OPENING FOR CONVEYOR BELT.
6. ACOUSTICAL WALL PANEL AS SPECIFIED.
7. STEEL BOLLARD - PAINTED.
8. CONCRETE CURB.
9. FLIGHT INFORMATION DISPLAY SCREEN (FIDS), SEE ELECTRICAL DRAWINGS FOR POWER REQUIREMENTS.
10. FIRE EXTINGUISHER AS SPECIFIED.

LEGEND

1 SEE KEYED NOTES

REFERENCES -- BENCHMARK

DATE	REVISIONS	BY

CONSULTANT'S NAME

mijares ● mora
ARCHITECTS INC.
EL PASO, TEXAS 79912
111 N. FESTIVAL
TEL: 915-542-1991
FAX: 542-1994

ARCHITECT'S SEAL

REGISTERED ARCHITECT
JORGE L. MORA
12526
STATE OF TEXAS
DATE 5-31-16

SCALE

DATE	MAY 2016
DESIGN BY	MM/JRP
DRAWN BY	S.D.
CHKD. BY	S.D.
APPD. BY	JLM
JOB NO.	1603

PROJECT NAME

EL PASO INTERNATIONAL AIRPORT
CHECKED BAGGAGE INSPECTION SYSTEM

6701 CONVAIR RD. EL PASO, TEXAS

EL PASO INTERNATIONAL AIRPORT

CITY OF EL PASO

SHEET TITLE

INTERIOR ELEVATIONS

A7.1

FILE NO. 238512

SHEET___OF___

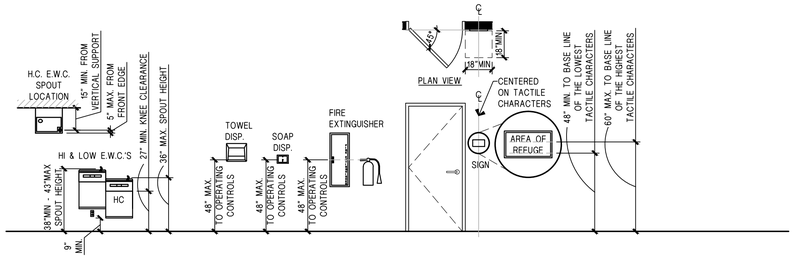

1 TYPICAL MOUNTING HEIGHTS FOR ACCESSIBLE PLUMBING FIXTURES AND ACCESSORIES
SCALE: 1/4"=1'-0"

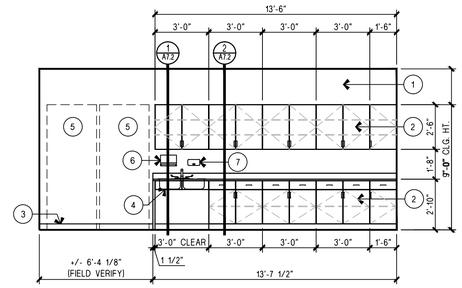

2 INTERIOR ELEVATION
SCALE: 1/4"=1'-0"

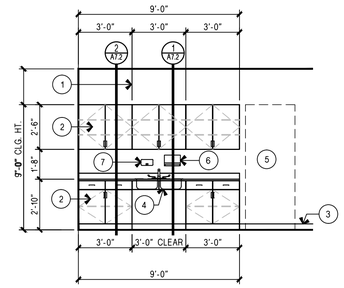

3 INTERIOR ELEVATION
SCALE: 1/4"=1'-0"

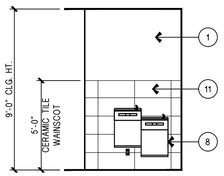

4 INTERIOR ELEVATION
SCALE: 1/4"=1'-0"

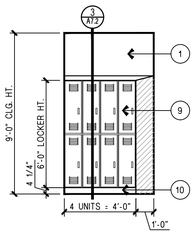

5 INTERIOR ELEVATION
SCALE: 1/4"=1'-0"

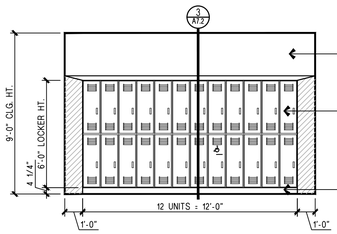

6 INTERIOR ELEVATION
SCALE: 1/4"=1'-0"

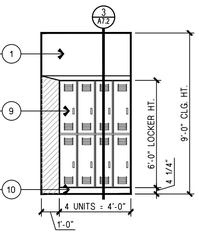

7 INTERIOR ELEVATION
SCALE: 1/4"=1'-0"

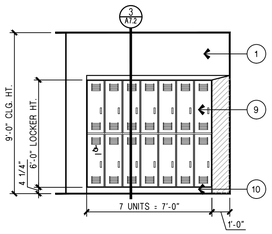

8 INTERIOR ELEVATION
SCALE: 1/4"=1'-0"

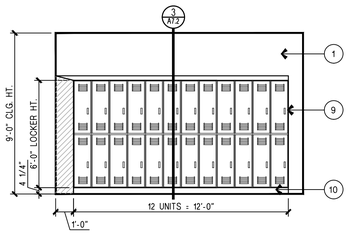

9 INTERIOR ELEVATION
SCALE: 1/4"=1'-0"

KEYED NOTES

1. WALL FINISH AS SCHEDULED.
2. MILLWORK (INTERIOR ARCHITECTURAL WOODWORK)
3. BASE AS SCHEDULED.
4. DOUBLE SINK, REFER TO PLUMBING FIXTURES SCHEDULE.
5. REFRIGERATOR, OWNER FURNISHED, CONTRACTOR INSTALLED. SEE ALSO MPE'S DRAWINGS.
6. SURFACE MOUNTED PAPER TOWEL DISPENSER AS SPECIFIED.
7. SURFACE MOUNTED SOAP DISPENSER AS SPECIFIED.
8. LOW AND HIGH ELECTRICAL WATER COOLERS, REFER TO PLUMBING FIXTURES SCHEDULE.
9. DOUBLE TIER METAL LOCKER UNIT AS SPECIFIED.
10. CONCRETE BASE.
11. CERAMIC TILE AS SPECIFIED.

GENERAL NOTES

A. REFERENCE ACCESSIBLE PLUMBING FIXTURES MOUNTING HEIGHT REQUIREMENTS ON 1/A7.2 FOR CLEARANCES REQUIRED.

B. ALL COUNTERTOPS SHALL BE PLASTIC LAMINATE UNLESS NOTED OTHERWISE ON INTERIOR ELEVATIONS.

C. ALL MILLWORK/EQUIPMENT IS TO BE INSTALLED OVER FLOOR AND WALL FINISHES.

D. PVC EDGE BANDING ON ALL DOORS, SHELVING, AND DRAWERS. COLOR TO BE APPROVED BY ARCHITECT.

E. ALL GYP. BD. ON PLUMBING WALLS TO BE WATER RESISTANT.

F. PROVIDE DOOR SIGNAGE AT ALL ROOMS.

LEGEND

(1) SEE KEYED NOTES

REFERENCES - BENCHMARK

DATE	REVISIONS	BY

CONSULTANT'S NAME

mijares mora
ARCHITECTS INC.
EL PASO, TEXAS 79912
111 N. FESTIVAL
TEL: 915-542-1991
FAX: 542-1994

ARCHITECT'S SEAL

REGISTERED ARCHITECT
JORGE L. MORA
12526
STATE OF TEXAS
DATE 5-31-16

SCALE

DATE	MAY 2016
DESIGN BY	MM/RP
DRAWN BY	S.D.
CHKD. BY	S.D.
APPD. BY	JLM
JOB NO.	1603

PROJECT NAME

EL PASO INTERNATIONAL AIRPORT
CHECKED BAGGAGE INSPECTION SYSTEM

6701 CONVAIR RD. EL PASO, TEXAS

EL PASO INTERNATIONAL

CITY OF EL PASO

SHEET TITLE

INTERIOR ELEVATIONS

A7.2

FILE NO. 238512

SHEET___OF___

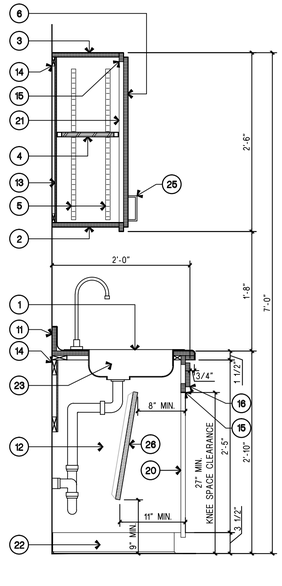

1 MILLWORK SECTION

SCALE: 1" = 1'-0"

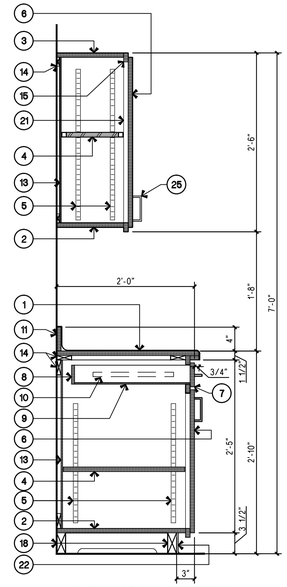

2 MILLWORK SECTION

SCALE: 1" = 1'-0"

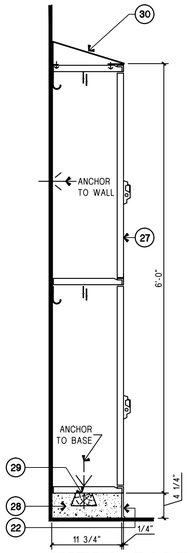

3 SECTION AT LOCKER

SCALE: 1" = 1'-0"

KEYED NOTES

1. 3/4" COUNTERTOP W/ PLASTIC LAMINATE FINISH.
2. 3/4" BOTTOM W/ PLASTIC LAMINATE FINISH.
3. 3/4" TOP LET INTO FACE FRAME W/ PLASTIC LAMINATE FINISH.
4. 3/4" PLYWOOD SHELVES W/ EDGE BAND, 1" IF OVER 3'-0" WIDE WITH PLASTIC LAMINATE FINISH.
5. RECESSED SHELF STANDARDS AND SUPPORTS.
6. 3/4" DOOR W/ PLASTIC LAMINATE FINISH.
7. 3/4" DRAWER FRONT W/ PLASTIC LAMINATE FINISH.
8. 1/2" DRAWER BACK W/ PLASTIC LAMINATE FINISH.
9. 1/4" DRAWER BOTTOM W/ PLASTIC LAMINATE FINISH.
10. DRAWER SLIDES - DOUBLE ROLLER SELF CLOSING WITH FULL EXTENSIONS AS SPECIFIED.
11. 3/4" BACK SPLASH W/ PLASTIC LAMINATE FINISH.
12. 3/4" END W/ PLASTIC LAMINATE FINISH.
13. 1/4" BACK W/ MELAMINE FINISH.
14. 3/4" X 2 1/2" SOLID WOOD WEB FRAME.
15. 3/4" STOP FRAME W/ PLASTIC LAMINATE FINISH.
16. 3/4" FALSE DRAWER PANEL W/ PLASTIC LAMINATE FINISH.
17. 2 LAYERS OF 3/4" VERTICAL DIVIDER W/ MELAMINE FINISH.
18. CONT. 2X4 WOOD BLOCKING.
19. 3/4" PLYWOOD COUNTERTOP W/ PLASTIC LAMINATE FINISH.
20. 2 LAYERS OF 3/4" PLYWOOD SUPPORT BRACKET W/ PLASTIC LAMINATE AT EACH END (TYP.).
21. LINE OF STOP FRAME.
22. BASE AS SCHEDULED.
23. SINK - REFER TO PLUMBING DRAWINGS.
24. 2" DIAMETER PLASTIC GROMMET.
25. DOORS & DRAWERS - ALUMINUM PULLS - TYPICAL.
26. 3/4" PLYWOOD SCREEN PANEL; HANG W/ WOOD CLEATS FROM ADJ. CABINET PANELS.
27. METAL LOCKER UNIT AS SPECIFIED.
28. CONCRETE BASE (2500 PSI).
29. CONT. 2X WOOD BLOCKING.
30. SLOPED TOP PER LOCKER MANUFACTURER.

GENERAL NOTES

A. PVC EDGEBAND ON ALL DOORS, SHELVING, AND DRAWERS. COLOR TO BE APPROVED BY THE ARCHITECT.

B. BACKSPLASH AND COUNTERTOP SHALL BE LAMINATED WITH ONE CONTINUOUS PIECE OF LAMINATE WITH TYPICAL COVED BACKSPLASH AND TYPICAL BULLNOSE EDGE.

C. BULLNOSE EDGE IS TO BE PROVIDED ON ALL COUNTERTOPS UNLESS NOTED OR SHOWN OTHERWISE.

D. ALL INTERIOR SHELVING SHALL BE WHITE MELAMINE AS SPECIFIED UNLESS NOTED OTHERWISE ON INTERIOR ELEVATIONS.

LEGEND

(1) SEE KEYED NOTES

REFERENCES -- BENCHMARK

DATE	REVISIONS	BY

CONSULTANT'S NAME

mijares mora
ARCHITECTS INC.
EL PASO, TEXAS 79912
111 N. FESTIVAL
TEL: 915-542-1991
FAX: 542-1994

ARCHITECT'S SEAL

REGISTERED ARCHITECT
JORGE L. MORA
12526
STATE OF TEXAS
DATE 5-31-16

SCALE

DATE	MAY 2016
DESIGN BY	MM/DMP
DRAWN BY	S.D.
CHKD. BY	S.D.
APPD. BY	JLM
JOB NO.	1603

PROJECT NAME

EL PASO INTERNATIONAL AIRPORT
CHECKED BAGGAGE INSPECTION SYSTEM

6701 CONVAIR RD. EL PASO, TEXAS

EL PASO INTERNATIONAL AIRPORT

CITY OF EL PASO

SHEET TITLE

MILLWORK SECTIONS

A7.3

FILE NO. 238512

SHEET___OF___

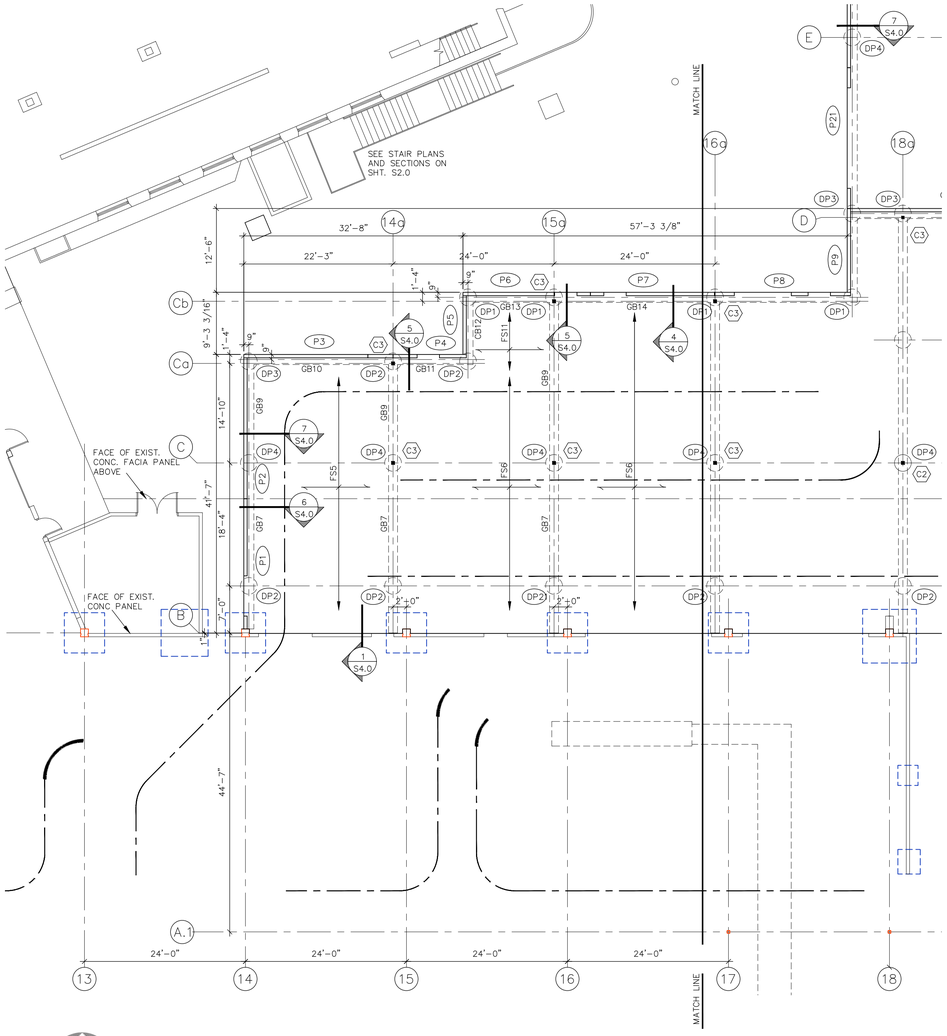

PARTIAL FOUNDATION PLAN - AREA A

SCALE: 3/32" = 1'-0"

COLUMN SCHEDULE

MARK	COLUMN	
	SIZE	BASE PLATE
C1	HSS6X6X1/4 STEEL TUBE	TYPE A
C2	HSS6X6X3/16 STEEL TUBE	TYPE A
C3	HSS5X5X1/4 STEEL TUBE	TYPE B

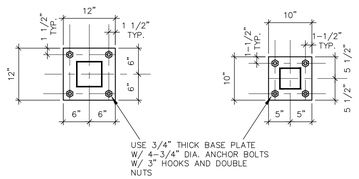

TYPE "A"
NTS

TYPE "B"
NTS

NOTES:

1. THE EXISTING FINISH FLOOR IS AT REFERENCE EL. 0'-0". SEE THE CIVIL DRAWINGS FOR THE ACTUAL DATUM ELEVATION.
2. SEE SHEET S3.0 FOR WALL PANEL ELEVATIONS.
3. SEE SHEET S1.0 FOR APPLICABLE GENERAL NOTES.
4. SEE SHEET S6.1 FOR DRILLED PIER, CONCRETE GRADE BEAM AND FLOOR SLAB SCHEDULES.

THE CONSTRUCTION JOINT (CJ) LAYOUT SHOWN IS FOR THE SLAB CONSTRUCTION ONLY. IT IS NOT INTENDED TO BE RESTRICTIVE AND THE CONTRACTOR MAY PROPOSE AND SUBMIT FOR APPROVAL AN ALTERNATE SLAB CONSTRUCTION JOINT LAYOUT PLAN. THE ONLY RESTRICTION IS THAT THE SIZE OF POURS BOUNDED BY CONSTRUCTION JOINTS BE SUCH THAT THEY CAN BE PROPERLY PLACED, FINISHED AND CURED AND THAT THE CONSTRUCTION JOINT DETAILS BE AS SHOWN HEREIN.

EXCEPT AS SUBSEQUENTLY NOTED, THE CONSTRUCTION JOINT LOCATIONS IN THE GRADE BEAMS IS OPTIONAL WITH THE CONTRACTOR. THE ONLY RESTRICTION IS THAT THE CONSTRUCTION JOINTS BE LOCATED IN THE MIDDLE THIRD OF THE SPANS AND THAT THE CONSTRUCTION JOINT DETAILS BE AS SHOWN HEREIN.

LEGEND:

CJ	CONSTRUCTION JOINTS ALONG COLUMN CENTER LINES, TYPICAL
SJ	SAWED JOINTS BETWEEN COLUMN CENTER LINES, TYPICAL
GB#.	GRADE BEAM, SEE GRADE BEAM SCHEDULE ON SHT. S6.1
PX	PANEL MARK – SEE WALL PANEL ELEVATIONS ON SHT. S3.0
GBX	GRADE BEAM MARK – SEE SCHEDULE ON SHT. S6.1
DPX	DRILLED PIER MARK – SEE SCHEDULE ON SHT. S6.1

DIRECTION OF SPAN
FSX — SLAB MARK SEE SCHED.
EXTENT OF SLAB W/SLAB MARK

ADDITIONAL REINFORCING IN SLAB AT ALL EXTERIOR CORNERS, SEE DETAIL

CENTERLINE OF FLOOR SUPPORTED CONVEYOR BELTS.

GENERAL NOTES:

DESIGN LOADS

A) DEAD LOADS — ACTUAL WEIGHTS OF MATERIALS

B) LIVE LOADS

ROOF — 20 PSF

C) SNOW LOAD — Pg = 5 PSF

D) WIND LOAD DATA
1) BUILDING CATEGORY — III
2) IMPORTANCE FACTOR, Iw — 1.0
3) BASIC WIND SPEED, V (3 SEC) — 100 MPH
4) EXPOSURE — C

E) SEISMIC LOAD DATA
1) USE GROUP — II
2) IMPORTANCE FACTOR, Is — 1.25
3) SPECTRAL RESPONSE COEF. — Sds = 0.361 Sd1 = 0.170
4) SITE CLASS — D

THE FIRST FLOOR IS AT REFERENCE ELEVATION 0'-0". ELEVATIONS NOTED ON PLAN AS (+/-) X'-X" ARE BOTTOM OF FOOTING, TOP OF CONCRETE, STEEL, ETC. AND ARE GIVEN WITH REFERENCE TO THIS ELEVATION.

CONCRETE
A) ALL CONCRETE, UNLESS OTHERWISE NOTED — Fc=3000 PSI @ 28 DAYS
B) EXTERIOR WALKS AND CURBS — Fc=2500 PSI @ 28 DAYS

CONCRETE PROTECTION FOR REINFORCEMENT, UNLESS OTHERWISE NOTED, SHALL BE AS FOLLOWS:

CONCRETE DEPOSITED AGAINST EARTH ---------- 3 INCHES
CONCRETE BELOW GROUND DEPOSITED AGAINST FORMS 2 INCHES
SLABS ON GRADE ---------- 1 1/2" FROM TOP
ELEVATED SLABS ----------1" FROM TOP

ALL REINFORCING STEEL SHALL BE ASTM A-615, GRADE 60. WELDING OF REINFORCING NOT PERMITTED. PROVIDE CONTINUITY OF REINFORCEMENT IN REINFORCED CONCRETE MEMBERS AND MASONRY BOND BEAMS AT CORNERS BY PROVIDING CORNER BARS OF SAME SIZE AND SPACING AS BARS BEING LAPPED. ALL LAPS SHALL BE OF SUFFICIENT LENGTH TO DEVELOPE THE STRENGTH OF THE BAR. PROVIDE BAR SUPPORTS FOR ALL REINFORCING STEEL.

CARTON FORMS FOR CONCRETE CONSTRUCTION SHALL BE "SUREVOID" CARTON FORMS AS MANUFACTURED BY SUREVOID PRODUCTS, INC.. REQUIRED "SUREVOID" PRODUCTS SHALL BE AS FOLLOWS:

"SLABVOID" WITH ENDCAPS AND "SURECOVER" BOARD
"WALLVOID" WITH ENDCAPS AND "SEAMCOVER" PADS
"SUREROUND PIER VOID"

INSTALLATION PROCEDURES AND DETAILS SHALL BE AS RECOMMENDED BY THE CARTON FORM MANUFACTURER.

THE SECTIONS, DETAILS AND NOTES SHOWN ON THE DRAWINGS ARE TYPICAL AND ARE APPLICABLE AT/TO SIMILAR CONDITIONS THROUGHOUT THE DRAWINGS REGARDLESS OF WHETHER OR NOT THEY ARE SPECIFICALLY REFERENCED ON ON THE PLANS OR NOTED ON ALL SECTIONS AND DETAILS.

THE STRUCTURAL DRAWINGS AND SPECIFICATIONS REPRESENT THE FINISHED STRUCTURE. THEY DO NOT INDICATE THE MEANS, METHODS, TECHNIQUES, SEQUENCES, PROCEDURES AND JOBSITE SAFETY. THE CONTRACTOR SHALL PROVIDE ALL MEASURES NECESSARY TO PROVIDE JOBSITE SAFETY AND PROTECTION OF WORKMEN AND OTHER PERSONS DURING CONSTRUCTION.

THE CONTRACTOR SHALL PROVIDE TEMPORARY ERECTION BRACING AND SHORING OF ALL STRUCTURAL WORK AS REQUIRED FOR STABILITY OF THE STRUCTURE DURING ALL PHASES OF CONSTRUCTION. THE CONTRACTOR SHALL IMMEDIATELY NOTIFY THE ENGINEER OF ANY CONDITION WHICH, IN HIS OPINION, MIGHT ENDANGER THE STABILITY OF THE STRUCTURE OR CAUSE DISTRESS IN THE STRUCTURE.

FOUNDATION NOTES:

THE FOUNDATION HAS BEEN DESIGNED BASED ON THE FOUNDATION RECOMMENDATIONS CONTAINED IN THE SOIL FOUNDATION STUDY PREPARED FOR THIS FACILITY. A COPY OF THIS REPORT IS AVAILABLE FOR REVIEW.

SITE PREPARATION
REMOVE VEGETATION, DEBRIS, UNSATISFACTORY MATERIALS, OBSTRUCTIONS AND DELETERIOUS MATERIALS FROM GROUND SURFACE PRIOR TO PLACEMENT OF FILLS. THE EXPOSED SUBGRADE SHOULD BE SCARIFIED JUST PRIOR TO FILL PLACEMENT TO A MINIMUM DEPTH OF 8" AND RECOMPACTED TO A MINIMUM OF 95% OF THE MAXIMUM DENSITY AS DETERMINED BY ASTM D-1557 COMPACTION TEST. THE WATER CONTENT OF THE SUBGRADE SHOULD BE MAINTAINED SLIGHTLY ABOVE OPTIMUM MOISTURE CONTENT UNTIL PERMANENTLY COVERED. SUBGRADE COMPACTED WETTER THAN 3 PERCENTAGE POINTS ABOVE THE OPTIMUM WATER CONTENT SHOULD NOT BE ACCEPTED WITHOUT INSPECTION BY THE GEOTECHNICAL ENGINEER. THE SOILS AT THE BOTTOM OF FOUNDATION EXCAVATION SHALL BE COMPACTED TO AT LEAST 95% OF MAXIMUM DENSITY AS DETERMINED BY ASTM D-1557 COMPACTION TEST.

STRUCTURAL FILL
MATERIALS USED AS STRUCTURAL FILL SHALL BE GRANULAR, FREE OF DELETERIOUS MATERIALS AND HAVE A LIQUID LIMIT LESS THAN 40 AND A PLASTICITY INDEX LESS THAN 12. STRUCTURAL FILL SHOULD BE PLACED IN 8" THICK LOOSE LIFTS AND COMPACTED TO AT LEAST 95% MAXIMUM DENSITY AS DETERMINED BY ASTM D-1557 COMPACTION TEST.

ALL FOOTINGS SHALL BE FORMED WHENEVER THE CONCRETE CANNOT BE PLACED AGAINST SOLID EARTH EXCAVATION. ALL FOOTINGS SHALL BE EXCAVATED NEATLY AND, PRIOR TO PLACEMENT OF REINFORCEMENT AND CONCRETE, THE BASE SHALL BE COMPACTED AS SPECIFIED. ANY OVER-EXCAVATION SHALL BE FILLED WITH CONCRETE.

DRILLED PIER NOTES

A) PIER EXCAVATION:
PIER EXCAVATION SHOULD BE ADVANCED WITH A SINGLE FLIGHT AUGER OR BUCKET AUGER BITS TO THE DEPTHS INDICATED ON THE DRAWINGS. IF REQUIRED, INSTALL CASINGS AS EXCAVATION PROCEEDS SO THAT EARTH WALLS ARE MAINTAINED WITHOUT SPILLING INTO THE SHAFT. VERIFY BY INSPECTION AND MEASUREMENT THAT EXCAVATIONS ARE OPEN TO THOSE DEPTHS. THE AUGER SHOULD THEN BE PLACED BACK INTO THE HOLES AND TWO ADDITIONAL PASSES MADE AT HIGH R.P.M. TO CLEAN OUT LOOSE MATERIAL PRESENT IN THE BOTTOM OF THE HOLES. THE CONTRACTOR MAY BE REQUIRED TO INTRODUCE SMALL AMOUNTS OF WATER INTO THE EXCAVATIONS TO AID IN THE CLEANING, AS DIRECTED BY THE GEOTECHNICAL ENGINEER.

B) CONCRETE PLACEMENT:
CONCRETE SHOULD BE PLACED THROUGH A TREMIE OR OTHER DEVICE APPROVED BY THE GEOTECHNICAL ENGINEER SO THAT IT IS CHANNELED IN A MANNER TO FREE FALL AND CLEAR THE WALLS OF THE EXCAVATION AND REINFORCING TAINED WITHOUT SPILLING INTO THE SHAFT. VERIFY BY INSPECTION AND STEEL UNTIL IT STRIKES THE BOTTOM. PLACEMENT BY FREE FALL OF THE CONCRETE SHOULD BE CONSIDERED ACCEPTABLE TO WITHIN 5'-0" OF THE TOP OF THE PIER. THE TOP 5'-0" OF CONCRETE SHOULD BE VIBRATED TO ACHIEVE PROPER COMPACTION. CONCRETE SLUMP DURING PLACEMENT SHOULD BE IN THE RANGE OF 3 TO 5 INCHES. DIRECTED BY THE GEOTECHNICAL ENGINEER.

C) INSPECTION:
CONTINUOUS INSPECTION OF THE CONSTRUCTION OF DRILLED PIERS SHOULD BE CARRIED OUT BY THE GEOTECHNICAL ENGINEER. A REPRESENTATIVE OF THE GEOTECHNICAL ENGINEER SHOULD VERIFY PROPER DIAMETER, DEPTH AND CLEANING AND SHOULD VERIFY THE NATURE OF MATERIALS ENCOUNTERED DURING PIER EXCAVATION. CONCRETE PLACEMENT SHOULD BE CONTINUOUSLY OBSERVED BY THE INSPECTOR TO INSURE IT MEETS REQUIREMENTS. AN INSPECTION REPORT SHOULD BE SUBMITTED ON EACH PIER CONFIRMING, IN WRITING, THAT ALL DETAILS HAVE BEEN INSPECTED.

SUPERSTRUCTURE NOTES:

ALL STRUCTURAL AND MISCELLANEOUS STEEL, UNLESS OTHERWISE NOTED, SHALL BE ASTM A-36.

ALL STEEL PIPE COLUMNS SHALL BE MANUFACTURED FROM STEEL MEETING THE REQUIREMENTS OF ASTM A-501, Fy=36 KSI OR ASTM A-53, TYPE E OR S, GRADE B, Fy=35 KSI.

ALL STRUCTURAL TUBING COLUMNS SHALL BE MANUFACTURED FROM STEEL MEETING THE REQUIREMENTS OF ASTM A-500, GRADE B, Fy=46 KSI.

ALL CONNECTIONS NOT DETAILED OR OTHERWISE NOTED SHALL BE STANDARD AISC WELDED OR AISC BOLTED CONNECTIONS.

ALL WELDING SHALL BE IN ACCORDANCE WITH THE LATEST EDITION OF THE AWS CODE AND ALL WELDERS SHALL BE AWS CERTIFIED.

ALL BOLTS, UNLESS OTHERWISE NOTED, SHALL BE 3/4" DIA. ASTM A-325 WITH WASHERS. A-325 CONNECTIONS SHALL BE BEARING TYPE CONNECTIONS. ANCHOR BOLTS SHALL BE ASTM A-307.

STEEL BAR JOISTS SHALL BE DESIGNED, FABRICATED AND ERECTED ACCORDING TO THE REQUIREMENTS OF THE STEEL JOIST INSTITUTE. ALL JOISTS SHALL BE FIELD WELDED TO THE SUPPORTING MEMBERS. ALL BRIDGING SHALL BE COMPLETELY INSTALLED AND THE JOISTS PERMANENTLY FASTENED AS NOTED ABOVE BEFORE THE APPLICATION OF ANY LOADS EXCEPT THE WEIGHT OF THE ERECTORS. JOIST CHORDS ARE NOT DESIGNED FOR CONCENTRATED LOADS BETWEEN PANEL POINTS. IF CONCENTRATED LOADS FROM HANGING EQUIPMENT, PIPING, ETC., IS NOT AT A PANEL POINT, SEE JOIST REINFORCING DETAIL ON SHEET S6.0.

NOT ALL MECHANICAL OPENINGS ARE SHOWN ON THE FRAMING PLANS. SEE THE MECHANICAL AND ELECTRICAL PLANS FOR THE SIZE, NUMBER AND LOCATION OF ALL OPENINGS. WHERE BRIDGING LINES INTERFERE WITH MECHANICAL OR ELECTRICAL EQUIPMENT INSTALLATION, THE BRIDGING MAY BE REMOVED AFTER THE ROOF DECK IS IN PLACE AND PERMANENTLY FASTENED TO THE SUPPORTING JOISTS. AFTER REMOVAL OF THE INTERFERING BRIDGING, PROVIDE A DIAGONAL BRIDGING ANGLE FROM THE BOTTOM CHORD OF THE JOIST ADJACENT TO THE OPENING TO THE TOP CHORD OF THE NEXT JOIST.

THE STEEL ROOF DECK SHALL BE A MINIMUM OF 1 1/2" X 22 GAGE, TYPE B, WITH THE FOLLOWING MINIMUM SECTION PROPERTIES PER FOOT OF WIDTH:

I = 0.169 In^4 Sp = 0.186 In^3 Sn = 0.192 In^3

THE ROOF DECK SHALL BE CONTINUOUS OVER THREE SUPPORTS AND SHALL BE FASTENED TO THE SUPPORTS BY PUDDLE WELDING. ATTACH THE DECK WITH FOUR PUDDLE WELDS PER SECTION AT EACH SUPPORT AS NOTED. MECHANICALLY FASTEN SIDE LAPS OF ADJACENT UNITS AT 24" ON CENTER MAXIMUM USING SELF-TAPPING NO. 8 OR LARGER MACHINE SCREWS.

THE ROOF DECK SHALL BE CONTINUOUS OVER THREE SUPPORTS AND SHALL BE FASTENED TO THE SUPPORTS BY POWDER ACTUATED FASTENERS. ATTACH THE DECK WITH FOUR POWER ACTUATED FASTENERS PER SECTION AT EACH SUPPORT AS NOTED. MECHANICALLY FASTEN SIDE LAPS OF ADJACENT UNITS AT CENTER OF DECK SPAN USING SELF-TAPPING NO. 8 OR LARGER MACHINE SCREWS. THE POWDER ACTUATED FASTENERS SHALL BE AS MANUFACTURED BY "HILTI" FOR FASTENING METAL DECKING. THE FASTENER TYPE SHALL BE AS RECOMMENDED BY "HILTI" FOR THE BASE METAL THICKNESS AND DECK TYPE.

THE NON-COMPOSITE STEEL FORM DECK SHALL BE A MINIMUM OF 1" X 26 GAGE GALVANIZED WITH THE FOLLOWING MINIMUM SECTION PROPERTIES PER FOOT OF WIDTH:

Ip = 0.040 in^4 Sp = 0.067 in^3 Sn = 0.071 in^3

THE FORM DECK SHALL BE CONTINUOUS OVER THREE SUPPORTS AND SHALL BE FASTENED TO THE SUPPORTS BY PUDDLE WELDING THROUGH WASHERS. ATTACH THE DECK WITH FOUR PUDDLE WELDS PER SECTION AT EACH SUPPORT AS NOTED.

EXPANSION ANCHOR BOLTS SHALL BE "WEJ-IT" EXPANSION BOLTS AS MANUFACTURED BY WEJIT DIVISION, UNITED INDUSTRIES, 2415 E. 13TH PLACE, TULSA, OKLAHOMA, OR APPROVED EQUAL. INSTALLATION SHALL BE MADE IN STRICT ACCORDANCE WITH THE MANUFACTURER'S RECOMMENDATIONS.

HEADED CONCRETE ANCHORS SHALL BE NELSON HEADED ANCHORS WITH FLUXED ENDS OR APPROVED EQUAL. STUDS SHALL BE AUTOMATICALLY WELDED WITH SUITABLE NELSON STUD WELDING EQUIPMENT IN THE SHOP OR FIELD ON SPACING INDICATED ON THE DRAWINGS. ALL WELDS SHALL BE MADE IN ACCORDANCE WITH THE RECOMMENDATIONS OF THE NELSON STUD WELDING COMPANY, LORAIN, OHIO.

THE ADHESIVE ANCHORS SHALL BE THE "HILTI HVA ANCHORING SYSTEM" CONSISTING OF "HILTI HVU" ADHESIVE CAPSULES AND "HILTI HAS" ANCHOR RODS. THE INSTALLATION SHALL BE MADE IN STRICT ACCORDANCE WITH THE MANUFACTURERS RECOMMENDATIONS.

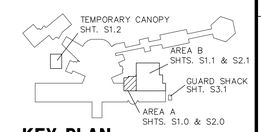

KEY PLAN
N.T.S.

REFERENCES – BENCHMARK

DATE	REVISIONS	BY

CONSULTANT'S NAME

mijares mora
ARCHITECTS INC.
111 N. FESTIVAL
TEL: 915-542-1591
EL PASO, TEXAS 79912
FAX: 542-1594

ENGINEER'S SEAL
STATE OF TEXAS
LARRY C. ZAMORA
33213
LICENSED PROFESSIONAL ENGINEER
05/31/2016
ZAMORA ENGINEERING INC.
F-1681

SCALE

DATE	MAY 2016
DESIGN BY	LCZ
DRAWN BY	LCZ
CHKD. BY	LCZ
APPD. BY	
JOB NO.	1603

PROJECT NAME

EL PASO INTERNATIONAL AIRPORT
CHECKED BAGGAGE INSPECTION SYSTEM
6701 CONVAIR RD. EL PASO, TEXAS

EL PASO INTERNATIONAL AIRPORT

CITY OF EL PASO

SHEET TITLE
PARTIAL FOUNDATION PLAN

S1.0

FILE NO. 238512

SHEET 1 OF 11

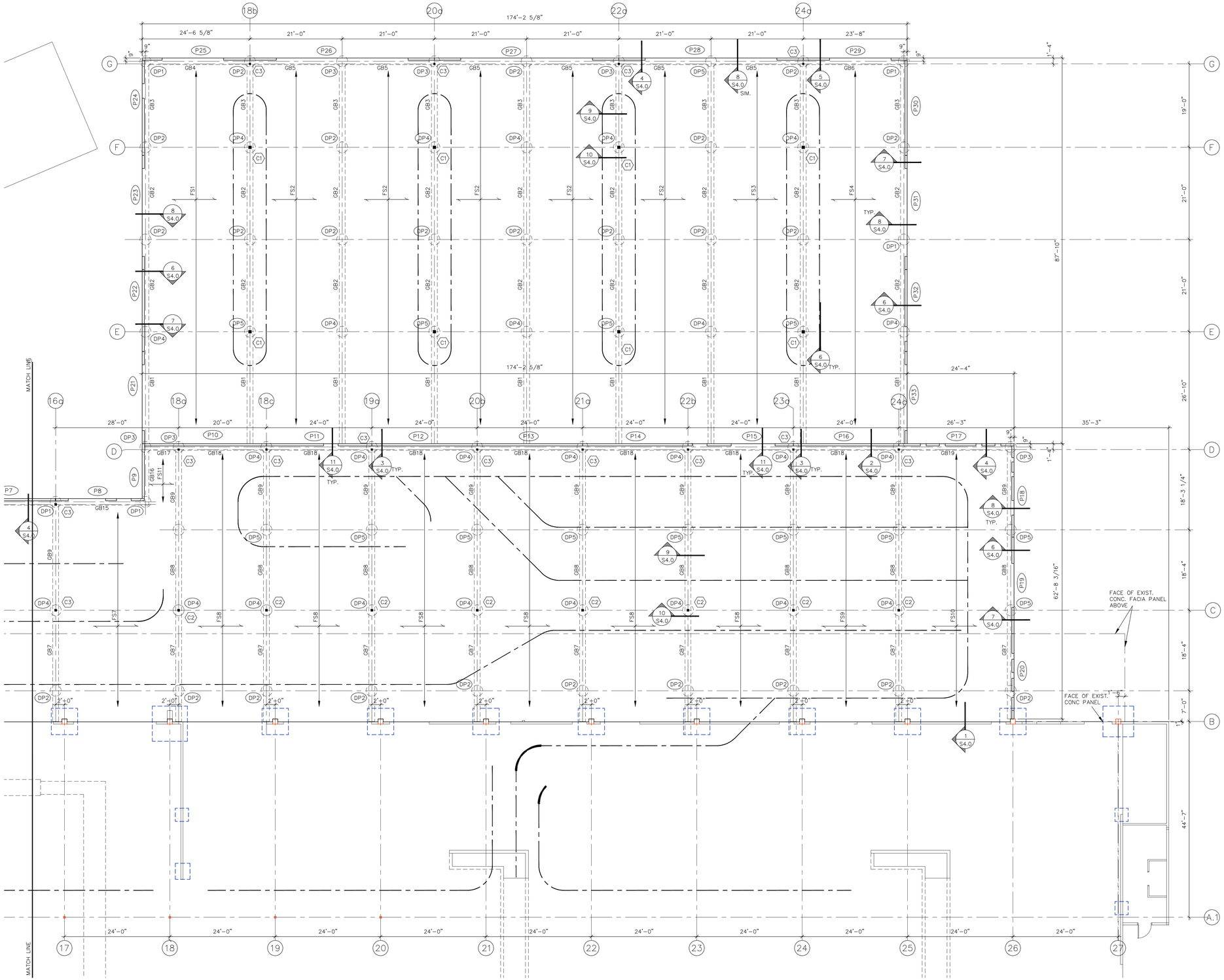

PARTIAL FOUNDATION PLAN - AREA B

SCALE: 3/32" = 1'-0"

NOTES:

1. THE EXISTING FINISH FLOOR IS AT REFERENCE EL. 0'-0". SEE THE CIVIL DRAWINGS FOR THE ACTUAL DATUM ELEVATION.
2. SEE SHEET S3.0 FOR WALL PANEL ELEVATIONS.
3. SEE SHEET S1.0 FOR APPLICABLE GENERAL NOTES.
4. SEE SHEET S6.1 FOR DRILLED PIER, CONCRETE GRADE BEAM AND FLOOR SLAB SCHEDULES.

THE CONSTRUCTION JOINT (CJ) LAYOUT SHOWN IS FOR THE SLAB CONSTRUCTION ONLY. IT IS NOT INTENDED TO BE RESTRICTIVE AND THE CONTRACTOR MAY PROPOSE AND SUBMIT FOR APPROVAL AN ALTERNATE SLAB CONSTRUCTION JOINT LAYOUT PLAN. THE ONLY RESTRICTION IS THAT THE SIZE OF POURS BOUNDED BY CONSTRUCTION JOINTS BE SUCH THAT THEY CAN BE PROPERLY PLACED, FINISHED AND CURED AND THAT THE CONSTRUCTION JOINT DETAILS BE AS SHOWN HEREIN.

EXCEPT AS SUBSEQUENTLY NOTED, THE CONSTRUCTION JOINT LOCATIONS IN THE GRADE BEAMS IS OPTIONAL WITH THE CONTRACTOR. THE ONLY RESTRICTION IS THAT THE CONSTRUCTION JOINTS BE LOCATED IN THE MIDDLE THIRD OF THE SPANS AND THAT THE CONSTRUCTION JOINT DETAILS BE AS SHOWN HEREIN.

LEGEND:

CJ	CONSTRUCTION JOINTS ALONG COLUMN CENTER LINES, TYPICAL
SJ	SAWED JOINTS BETWEEN COLUMN CENTER LINES, TYPICAL
PX	PANEL MARK – SEE WALL PANEL ELEVATIONS ON SHT. S3.0
GBX	GRADE BEAM MARK – SEE SCHEDULE ON SHT. S6.1
DPX	DRILLED PIER MARK – SEE SCHEDULE ON SHT. S6.1

FSX — DIRECTION OF SPAN; SLAB MARK SEE SCHED.; EXTENT OF SLAB W/SLAB MARK

CENTERLINE OF FLOOR SUPPORTED CONVEYOR BELTS.

ADDITIONAL REINFORCING IN SLAB AT ALL EXTERIOR CORNERS, SEE DETAIL

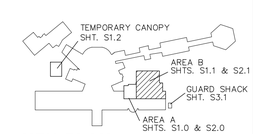

KEY PLAN
N.T.S.

REFERENCES – BENCHMARK

DATE	REVISIONS	BY

CONSULTANT'S NAME

mijares mora
ARCHITECTS INC.
111 N. FESTIVAL
TEL: 915-542-1591
EL PASO, TEXAS 79912
FAX: 542-1594

ENGINEER SEAL
STATE OF TEXAS
LARRY C. ZAMORA
33213
REGISTERED PROFESSIONAL ENGINEER
05/31/2016
ZAMORA ENGINEERING INC.
F-1651

SCALE

DATE MAY 2016
DESIGN BY LCZ
DRAWN BY LCZ
CHKD. BY LCZ
APPD. BY
JOB NO. 1603

PROJECT NAME

EL PASO INTERNATIONAL AIRPORT
CHECKED BAGGAGE INSPECTION SYSTEM
6701 CONVAIR RD.
EL PASO, TEXAS

CITY OF EL PASO

SHEET TITLE
PARTIAL FOUNDATION PLAN

S1.1

FILE NO. 238512

SHEET 2 OF 11

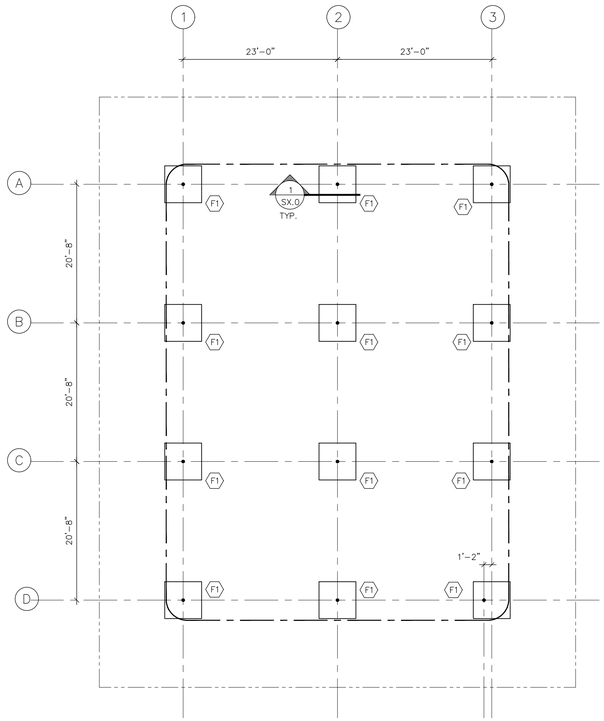

FOUNDATION PLAN - TEMPORARY CANOPY
SCALE: 3/32" = 1'-0"

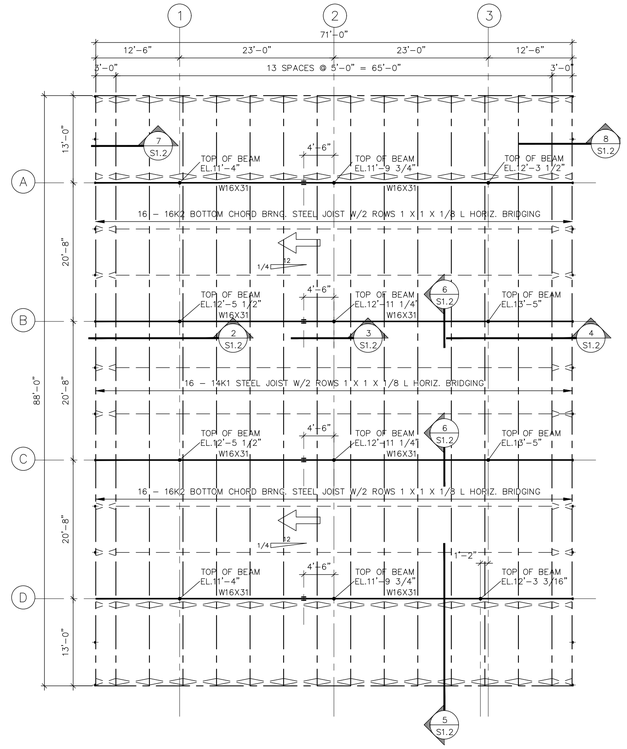

ROOF FRAMING PLAN - TEMPORARY CANOPY
SCALE: 3/32" = 1'-0"

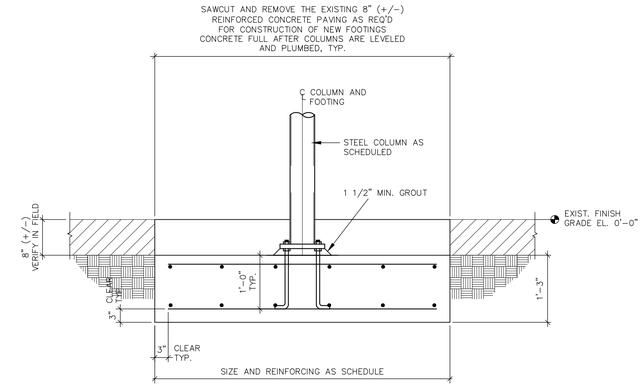

1 SECTION
SCALE : 3/4" = 1'-0"

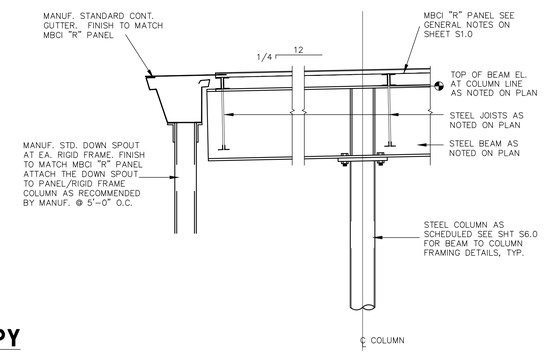

2 SECTION
SCALE : 3/4" = 1'-0"

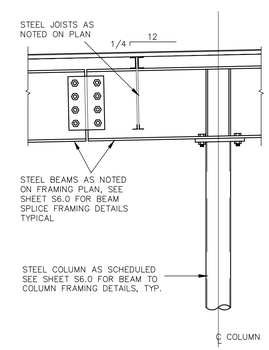

3 SECTION
SCALE : 3/4" = 1'-0"

NOTES:
1. THE EXISTING FINISH FLOOR IS AT REFERENCE EL. 0'-0" SEE THE CIVIL DRAWINGS FOR THE ACTUAL DATUM ELEVATION.
2. SEE SHEET S-200 FOR APPLICABLE GENERAL NOTES.
3. TOP OF FOOTING EL. (-) 2'-0" TYPICAL, UNLESS NOTED OTHERWISE

LEGEND:

EL.	ELEVATION
FTG.	FOOTING
T.O.F.	TOP OF FTG.
FX	SCHEDULED FOOTING AND COLUMN SIZE
— · —	CENTERLINE OF FLOOR SUPPORTED CONVEYOR BELTS.

COLUMN AND FOOTING SCHEDULE

MARK	COLUMN		FOOTING		REMARKS
	SIZE	BASE PLATE	SIZE	REINFORCING	
F1	5" DIA. STD. STEEL PIPE	TYPE C	5'-6" X 5'-6" X 1'-3"	6-#5 E.W. TOP AND BOTTOM	

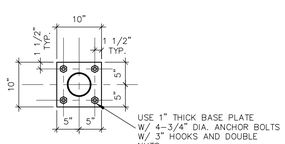

TYPE "C"
NTS

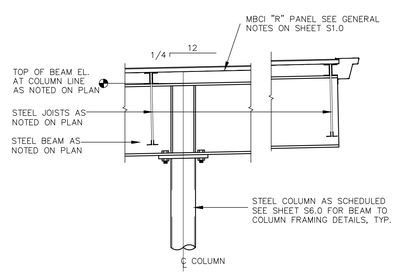

4 SECTION
SCALE : 3/4" = 1'-0"

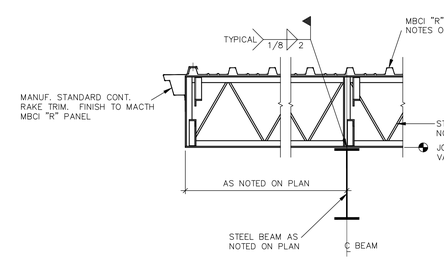

5 SECTION
SCALE : 3/4" = 1'-0"

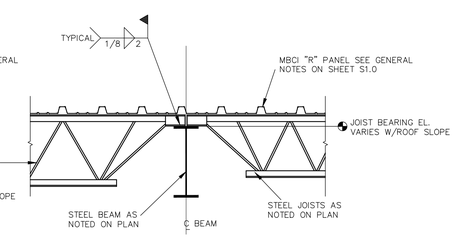

6 SECTION
SCALE : 3/4" = 1'-0"

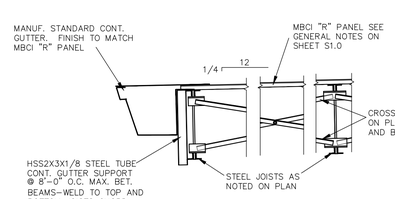

7 SECTION
SCALE : 3/4" = 1'-0"

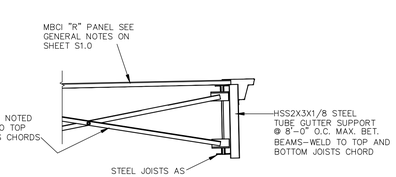

8 SECTION
SCALE : 3/4" = 1'-0"

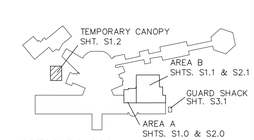

KEY PLAN
N.T.S.

REFERENCES - BENCHMARK

DATE	REVISIONS	BY

CONSULTANT'S NAME

mijares ● mora
ARCHITECTS INC.
111 N. FESTIVAL
TEL: 915-542-1591
EL PASO, TEXAS 79912
FAX: 542-1594

ENGINEER SEAL
STATE OF TEXAS
LARRY C. ZAMORA
33213
REGISTERED PROFESSIONAL ENGINEER
05/31/2016
ZAMORA ENGINEERING INC.
F-1651

SCALE

DATE	MAY 2016
DESIGN BY	LCZ
DRAWN BY	LCZ
CHKD. BY	LCZ
APPD. BY	
JOB NO.	1603

PROJECT NAME

EL PASO INTERNATIONAL AIRPORT CHECKED BAGGAGE INSPECTION SYSTEM
6701 CONVAIR RD.
EL PASO, TEXAS

EL PASO INTERNATIONAL AIRPORT

CITY OF EL PASO

SHEET TITLE
FOUNDATION AND ROOF FRAMING PLAN & SECTIONS

S1.2

FILE NO. 238512

SHEET 3 OF 11

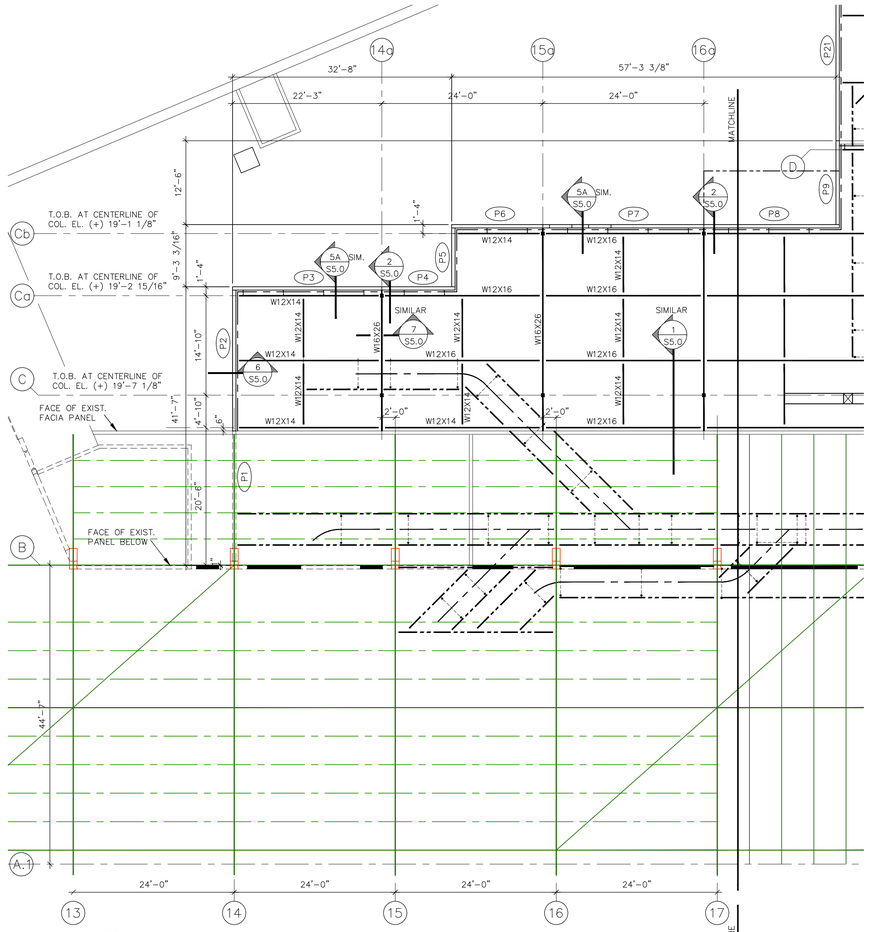

PARTIAL ROOF FRAMING PLAN - AREA A

SCALE: 3/32" = 1'-0"

NOTE:

SEE SHT. S6.0 FOR TYPICAL BEAM CONNECTIONS.

LEGEND:

EL.	ELEVATION
T.O.B.	TOP OF BEAM
PX	PANEL MARK – SEE WALL PANEL ELEVATIONS
	TYPICAL FRAMED OPENING FOR MECH. EQUIP./SKYLIGHTS AS DETAILED ON SHEET S6.0. COOR. SIZE & LOCATION W/ MECH. & ARCH. DRAWINGS.

4'-8" +/(-) COOR. FINAL DIM. W/TRAPEEZ HANGER DETAILS

W12X16, TYP. — CONVEYOR BELT HANGER SUPPORT BEAMS

CENTER LINE OF ROOF SUPPORTED CONVEYOR BELTS COOR. THE EXTENT AND LAYOUT DIMENSIONS WITH THE CONVEYOR BELT LAYOUT DRAWINGS.

W12X16, TYP.

CONVEYOR HANGER TRAPEEZ SUPPORTS. COOR. THE FINAL NUMBER, LOCATIONS, SPACINGS, AND DETAILS WITH THE CONVEYOUR BELT LAYOUT DRAWINGS.

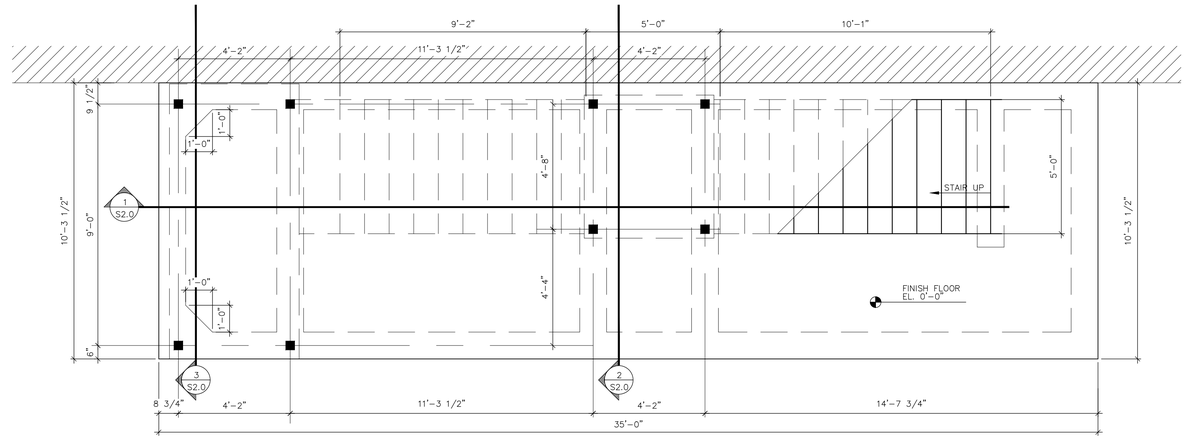

STAIR FOUNDATION PLAN

SCALE: 3/8" = 1'-0"

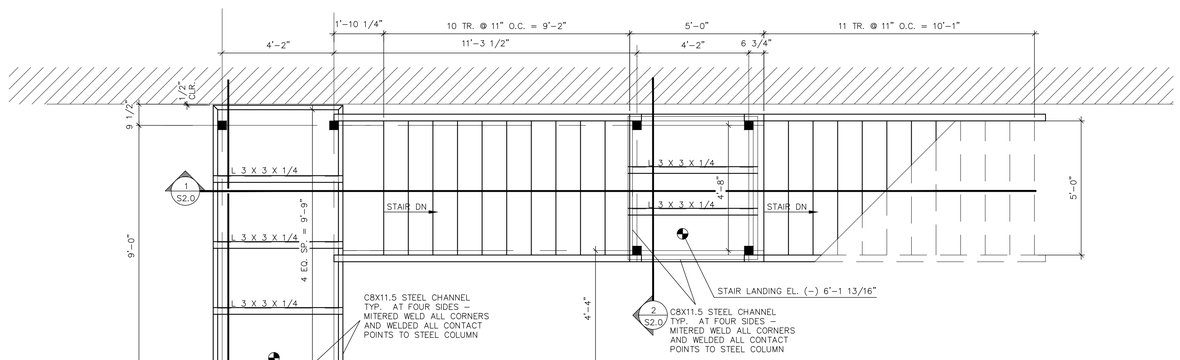

STAIR LANDING FRAMING PLAN

SCALE: 3/8" = 1'-0"

NOTE: SEE ARCH. DWGS. FOR STAIR RAILING

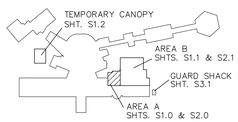

KEY PLAN

N.T.S.

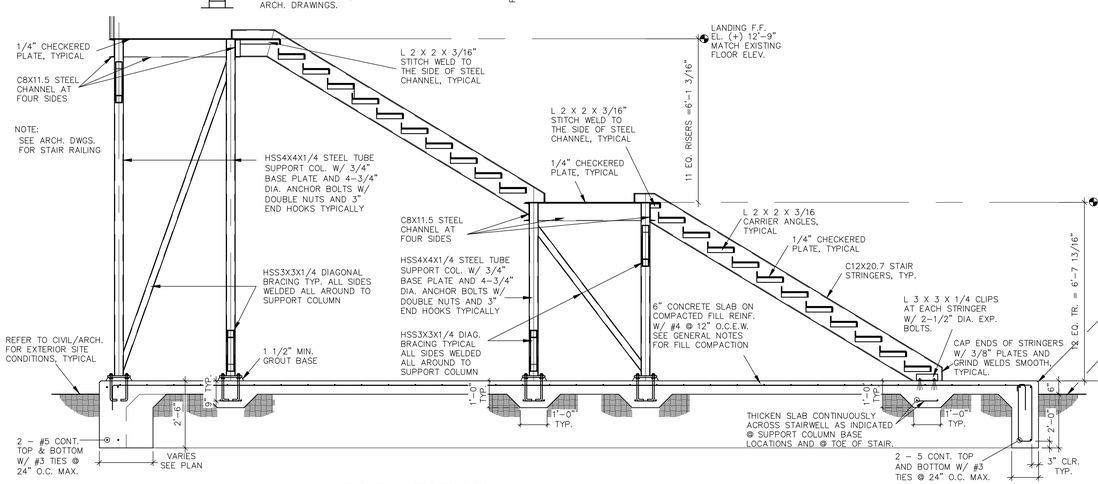

1 STAIR SECTION

SCALE: 3/8" = 1'-0"

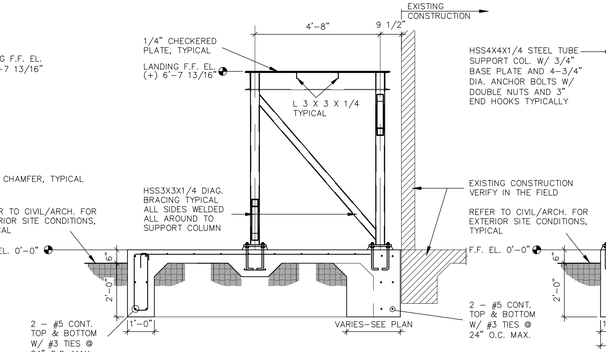

2 STAIR SECTION

SCALE: 3/8" = 1'-0"

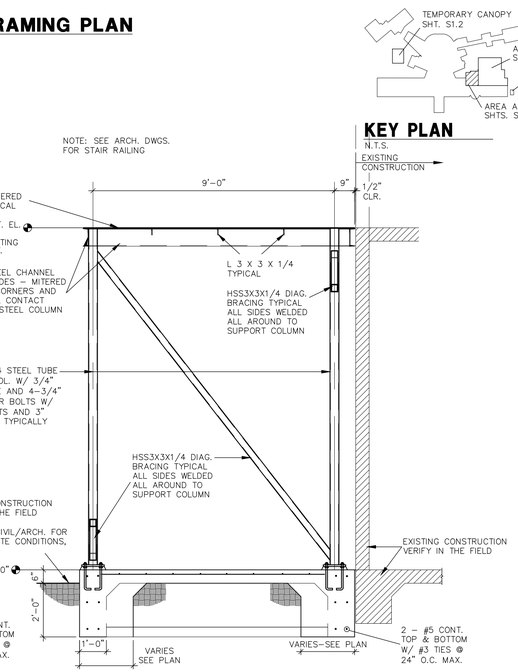

3 STAIR SECTION

SCALE: 3/8" = 1'-0"

REFERENCES – BENCHMARK

DATE	REVISIONS	BY

CONSULTANT'S NAME

mijares • mora ARCHITECTS INC.
111 N. FESTIVAL
TEL: 915-542-1591
EL PASO, TEXAS 79912
FAX: 542-1594

ENGINEER'S SEAL

LARRY C. ZAMORA 33213 TEXAS REGISTERED PROFESSIONAL ENGINEER
05/31/2016
ZAMORA ENGINEERING INC. F-1651

SCALE

DATE	MAY 2016
DESIGN BY	LCZ
DRAWN BY	LCZ
CHKD. BY	LCZ
APPD. BY	
JOB NO.	1603

PROJECT NAME

EL PASO INTERNATIONAL AIRPORT
CHECKED BAGGAGE INSPECTION SYSTEM
6701 CONVAIR RD.
EL PASO, TEXAS

EL PASO INTERNATIONAL AIRPORT

CITY OF EL PASO

SHEET TITLE

PARTIAL ROOF FRAMING PLAN

S2.0

FILE NO. 238512

SHEET 4 OF 11

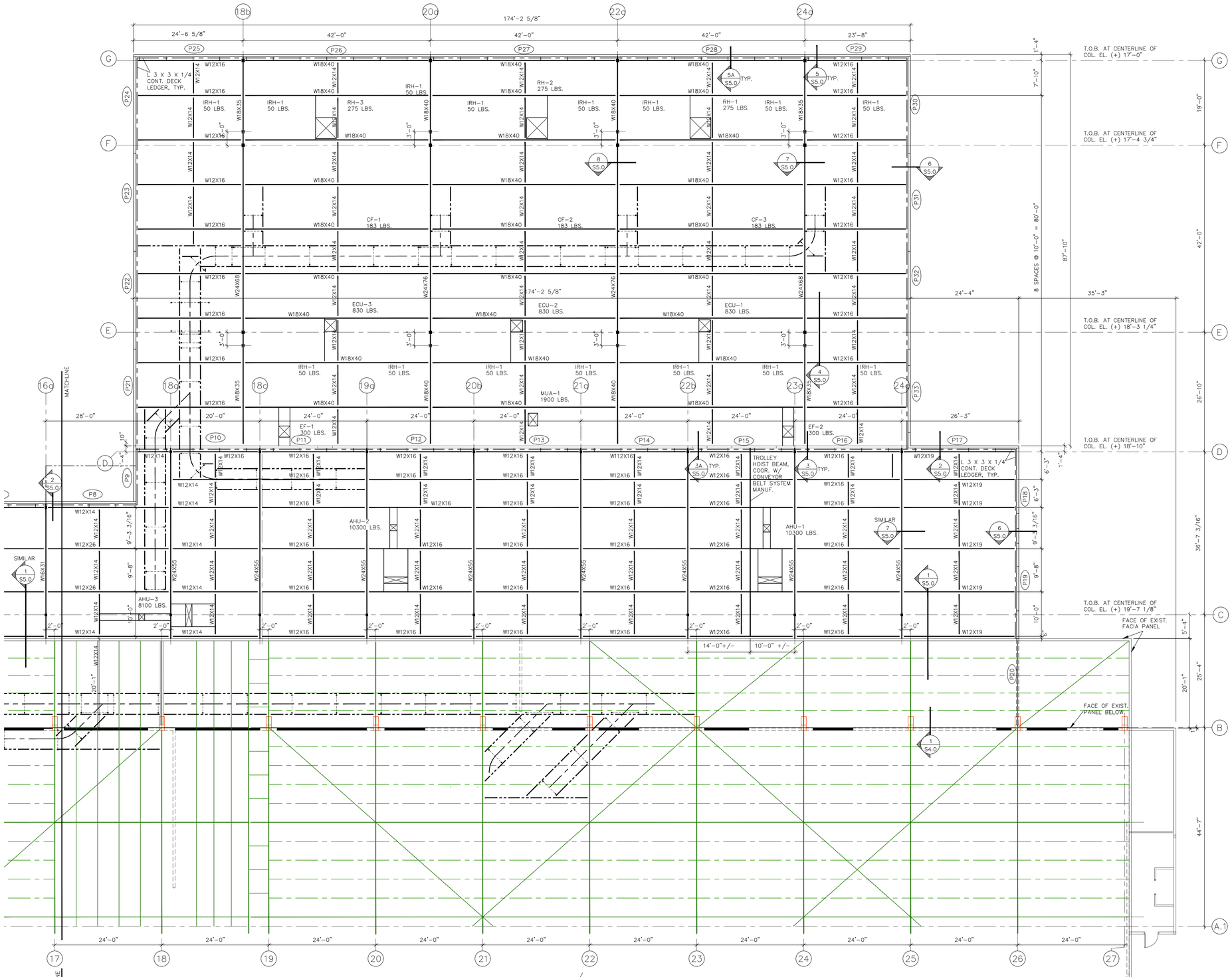

PARTIAL ROOF FRAMING PLAN - AREA B

SCALE: 3/32" = 1'-0"

NOTE:

SEE SHT. S-6.0 FOR TYPICAL BEAM CONNECTIONS.

LEGEND:

EL. ELEVATION

T.O.B. TOP OF BEAM

PX PANEL MARK – SEE WALL PANEL ELEVATIONS

TYPICAL FRAMED OPENING FOR MECH. EQUIP./SKYLIGHTS AS DETAILED ON SHEET S6.0 COOR. SIZE & LOCATION W/ MECH. & ARCH. DRAWINGS.

4'-8" +/-) COOR. FINAL DIM. W/TRAPEEZ HANGER DETAILS

W12X16, TYP.

CONVEYOR BELT HANGER SUPPORT BEAMS

CENTER LINE OF ROOF SUPPORTED CONVEYOR BELTS COOR. THE EXTENT AND LAYOUT DIMENSIONS WITH THE CONVEYOR BELT LAYOUT DRAWINGS.

W12X16, TYP.

CONVEYOR HANGER TRAPEEZ SUPPORTS. COOR. THE FINAL NUMBER, LOCATIONS, SPACINGS, AND DETAILS WITH THE CONVEYOUR BELT LAYOUT DRAWINGS.

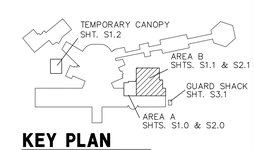

KEY PLAN

N.T.S.

REFERENCES – BENCHMARK

DATE	REVISIONS	BY

CONSULTANT'S NAME

mijares mora ARCHITECTS INC.
111 N. FESTIVAL
TEL: 915-542-1591
EL PASO, TEXAS 79912
FAX: 542-1594

ENGINEER'S SEAL

STATE OF TEXAS
LARRY C. ZAMORA
33213
REGISTERED PROFESSIONAL ENGINEER
05/31/2016
ZAMORA ENGINEERING INC.
F-1651

SCALE

DATE MAY 2016
DESIGN BY LCZ
DRAWN BY LCZ
CHKD. BY LCZ
APPD. BY
JOB NO. 1603

PROJECT NAME

EL PASO INTERNATIONAL AIRPORT
CHECKED BAGGAGE INSPECTION SYSTEM
6701 CONVAIR RD. EL PASO, TEXAS

EL PASO INTERNATIONAL AIRPORT

CITY OF EL PASO

SHEET TITLE

PARTIAL ROOF FRAMING PLAN

S2.1

FILE NO. 238512

SHEET 5 OF 11

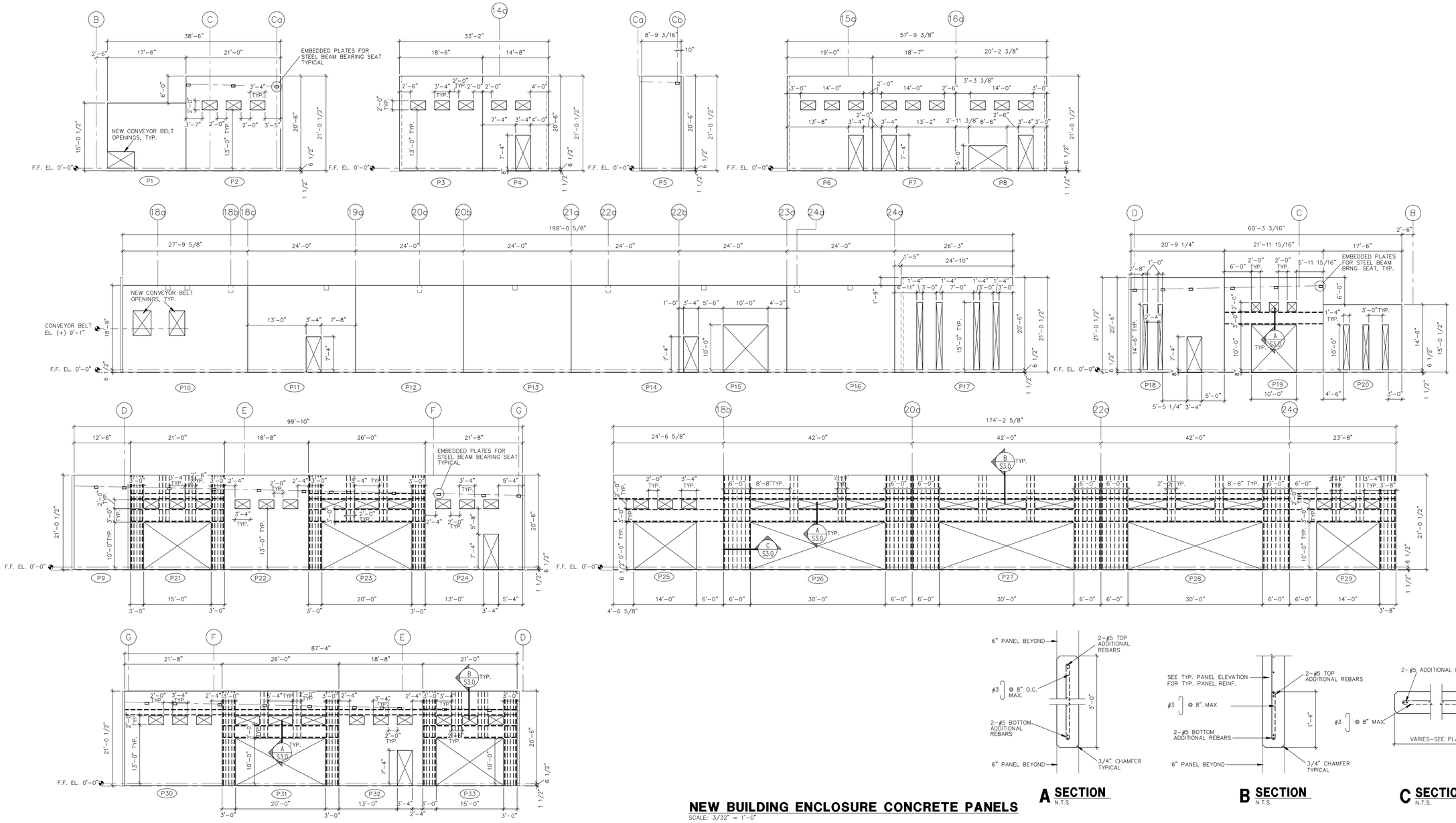

NEW BUILDING ENCLOSURE CONCRETE PANELS

SCALE: 3/32" = 1'-0"

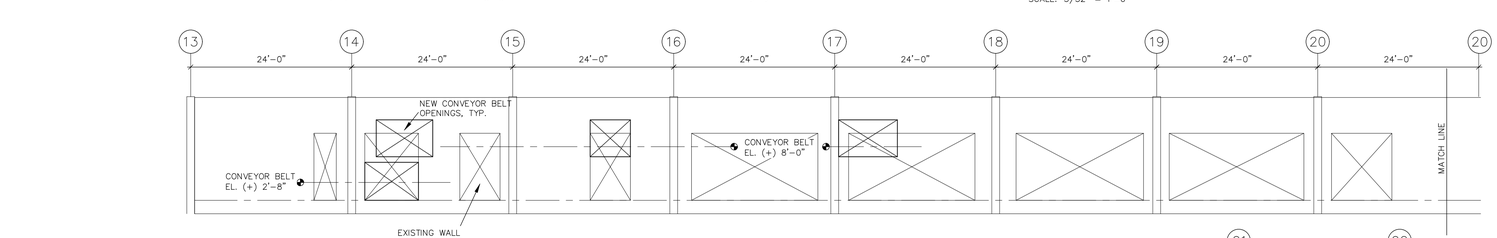

EXISTING BUILDING NORTH WALL CONCRETE PANELS

SCALE: 3/32" = 1'-0"

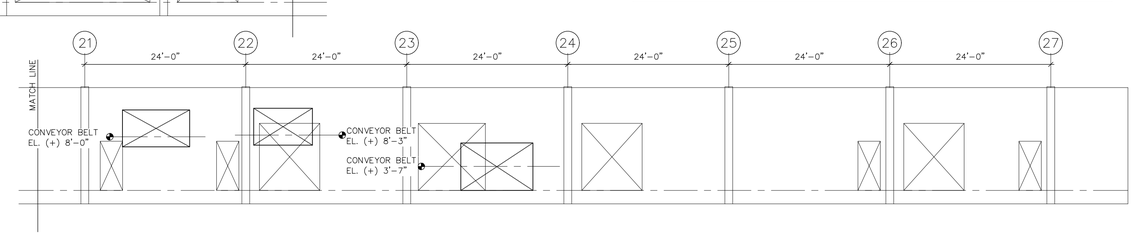

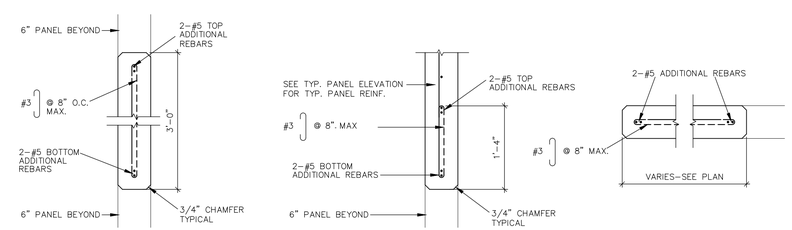

A SECTION N.T.S.

B SECTION N.T.S.

C SECTION N.T.S.

NOTE:

1. ALL WALL PANELS ARE VIEWED FROM INSIDE THE BUILDING.
2. NOT ALL OPENINGS AND EMBEDDED PLATES ARE SHOWN ON THE WALL PANEL ELEVATIONS. THE CONTRACTOR SHALL COORDINATE THE LOCATION (LATERAL AND VERTICAL) AND NUMBER OF ALL EMBEDDED PLATES.
3. REFER TO ARCHITECTURAL ELEVATIONS FOR SCUPPER LOCATIONS.
4. CHAMFER (3/4") ALL EXPOSED CORNERS ON ALL PARAPETS AND WINDOW/DOOR OPENINGS, TYPICAL.
5. THE CONTRACTOR SHALL VERIFY AND COORDINATE SIZES OF ALL PANELS, VERIFY AND COORDINATE SIZES AND LOCATIONS OF ALL OPENINGS WITH THE ARCHITECTURAL, MECHANICAL AND ELECTRICAL DRAWINGS PRIOR TO FABRICATION.

REFERENCES – BENCHMARK

DATE	REVISIONS	BY

CONSULTANT'S NAME

mijares mora
ARCHITECTS INC.
111 N. FESTIVAL
TEL: 915-542-1591
EL PASO, TEXAS 79912
FAX: 542-1594

ENGINEER'S SEAL

LARRY C. ZAMORA
33213
05/31/2016
ZAMORA ENGINEERING INC.
F-1681

SCALE

DATE	MAY 2016
DESIGN BY	LCZ
DRAWN BY	LCZ
CHKD. BY	LCZ
APPD. BY	
JOB NO.	1603

PROJECT NAME

EL PASO INTERNATIONAL AIRPORT CHECKED BAGGAGE INSPECTION SYSTEM

6701 CONVAIR RD. EL PASO, TEXAS

EL PASO INTERNATIONAL AIRPORT

CITY OF EL PASO

SHEET TITLE

WALL PANEL ELEVATIONS

S3.0

FILE NO. 238512

SHEET 6 OF 11

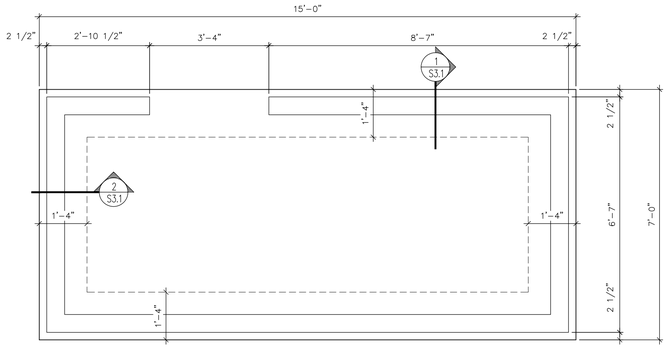

FOUNDATION PLAN-GUARD SHACK

SCALE: 1/2" = 1'-0"

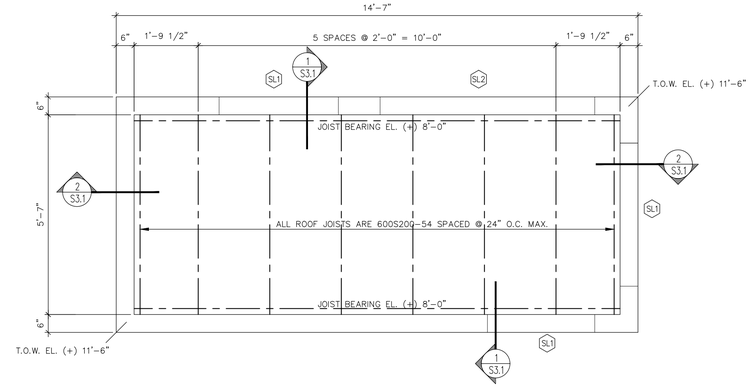

ROOF FRAMING PLAN-GUARD SHACK

SCALE: 1/2" = 1'-0"

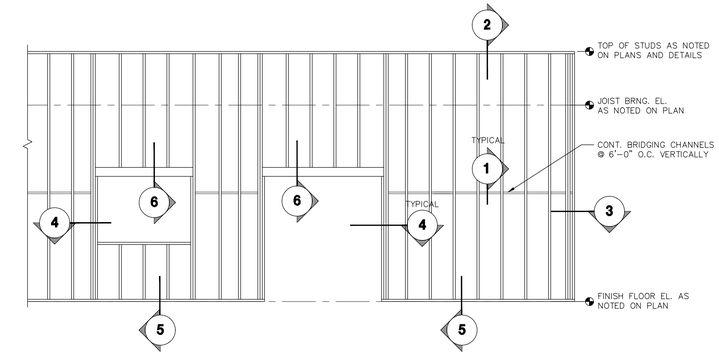

TYPICAL STUD WALL ELEVATION

NO SCALE

1. ALL EXTERIOR WALLS SHALL BE SHEATHED WITH STANDARD 1/2" DFPA GRADE-TRADE MARKED WITH IDENTIFICATION INDEX 24/16 WITH EXTERIOR GLUE. SEE GENERAL NOTES.
2. WELDING OF METAL STUD COMPONENTS SHALL BE MADE WITH 3/32" OF 1/8" AWS 6013 OR 7014 ELECTRODES USING 60 – 110 AMPERES OF CURRENT DEPENDING ON THE GAGE OF THE MATERIAL.

LINTEL SCHEDULE

MARK	TYPE	SIZE DOUBLE JOIST HEADER	REMARKS
SL1	A	2-600S200-54	
SL2	A	2-800S200-54	

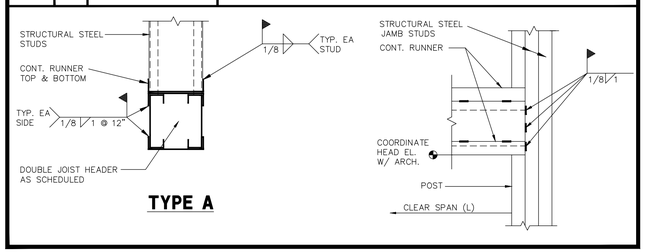

TYPE A

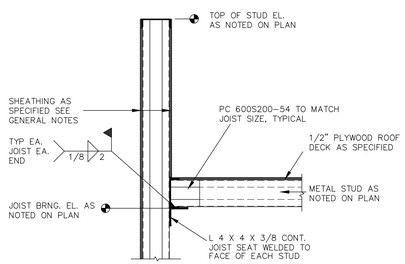

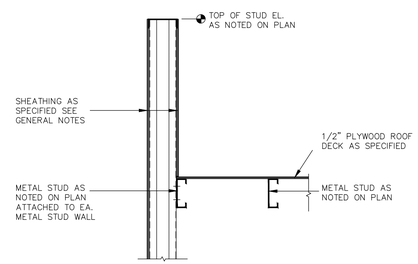

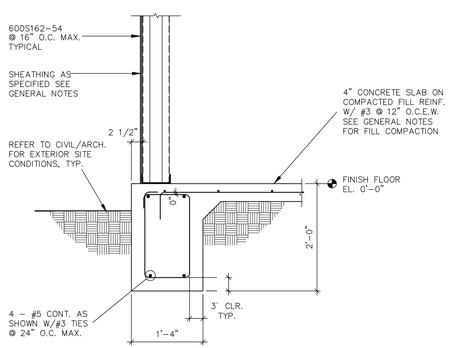

1 SECTION

SCALE : 3/4" = 1'-0"

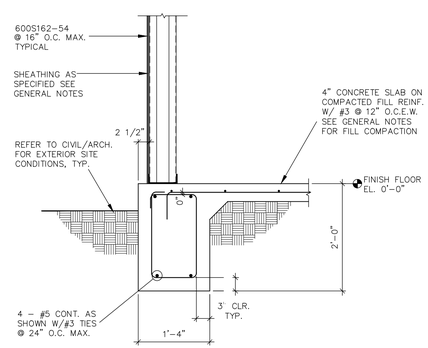

2 SECTION

SCALE : 3/4" = 1'-0"

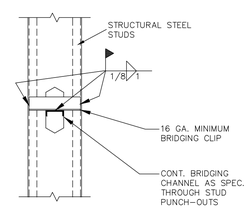

1 DETAIL

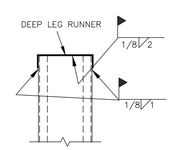

2 DETAIL

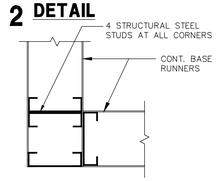

3 CORNER

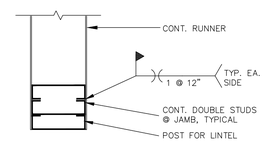

4 JAMB

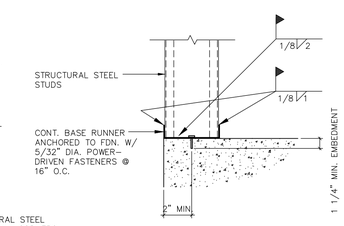

5 BASE

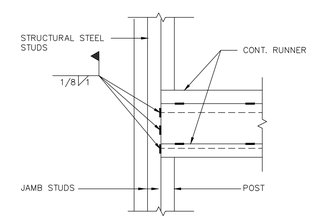

HEADER BEARING CONDITION

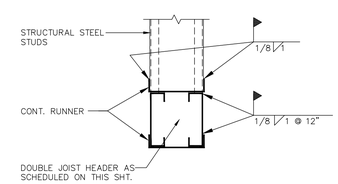

6 HEAD

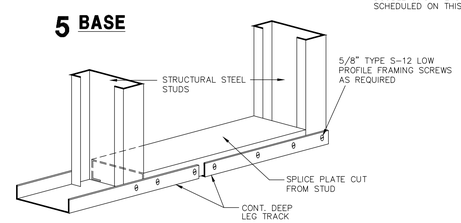

7 RUNNER SPLICE

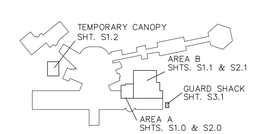

KEY PLAN

N.T.S.

REFERENCES – BENCHMARK

DATE	REVISIONS	BY

CONSULTANTS NAME

mijares mora
ARCHITECTS INC.
111 N. FESTIVAL
TEL: 915-542-1981
EL PASO, TEXAS 79912
FAX: 542-1594

ENGINEER SEAL

STATE OF TEXAS
LARRY C. ZAMORA
33213
REGISTERED PROFESSIONAL ENGINEER
05/31/2016
ZAMORA ENGINEERING INC.
F-1681

SCALE

DATE	MAY 2016
DESIGN BY	LCZ
DRAWN BY	LCZ
CHKD. BY	LCZ
APPD. BY	
JOB NO.	1603

PROJECT NAME

EL PASO INTERNATIONAL AIRPORT
CHECKED BAGGAGE INSPECTION SYSTEM
6701 CONVAIR RD.
EL PASO, TEXAS

EL PASO INTERNATIONAL AIRPORT

CITY OF EL PASO

SHEET TITLE

FOUNDATION/ROOF FRAMING PLANS SECTIONS AND TYPICAL DETAILS

S3.1

FILE NO. 238512

SHEET 7 OF 11

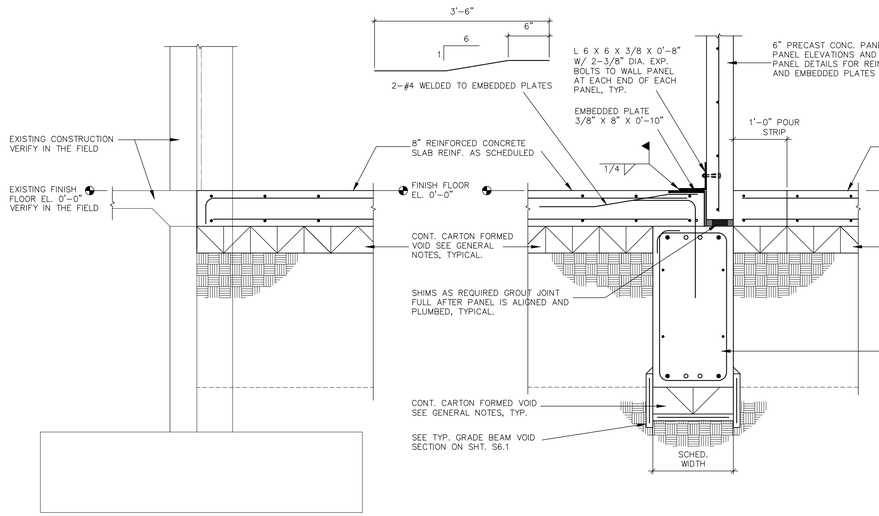

1 SECTION
SCALE : 3/4" = 1'-0"

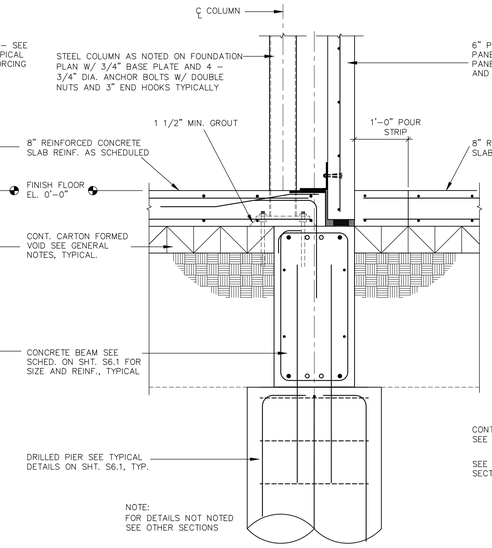

2 SECTION
SCALE : 3/4" = 1'-0"

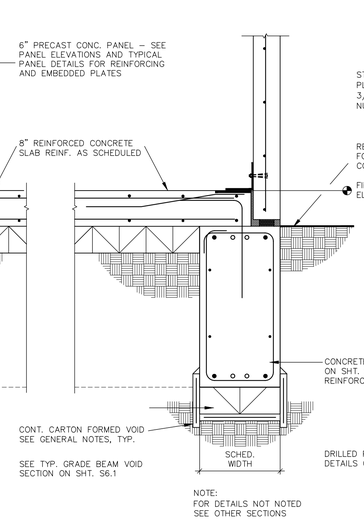

3 SECTION
SCALE : 3/4" = 1'-0"

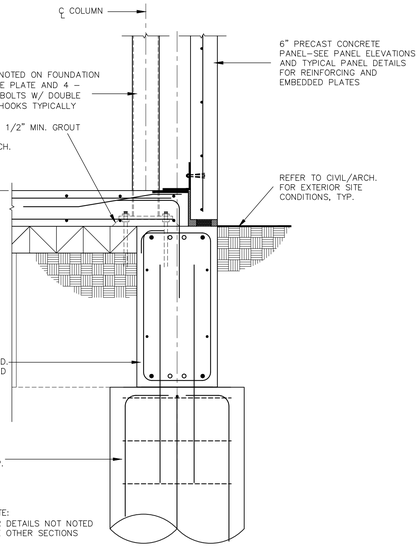

4 SECTION
SCALE : 3/4" = 1'-0"

5 SECTION
SCALE : 3/4" = 1'-0"

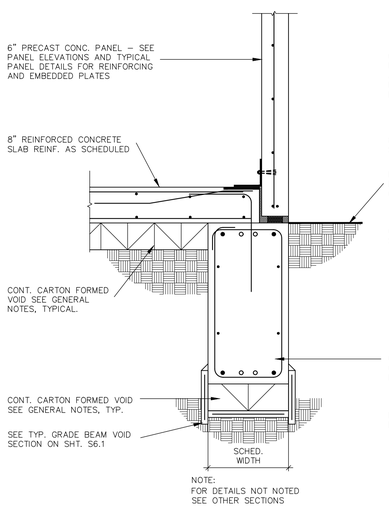

6 SECTION
SCALE : 3/4" = 1'-0"

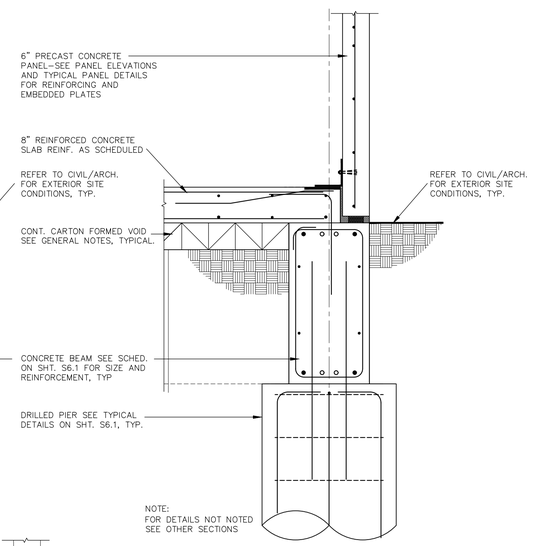

7 SECTION
SCALE : 3/4" = 1'-0"

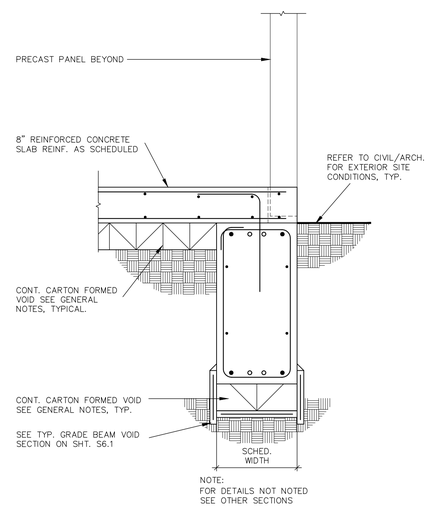

8 SECTION
SCALE : 3/4" = 1'-0"

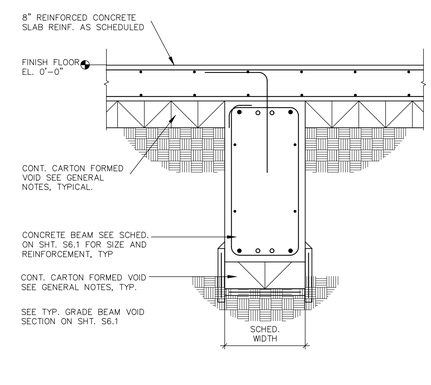

9 SECTION
SCALE : 3/4" = 1'-0"

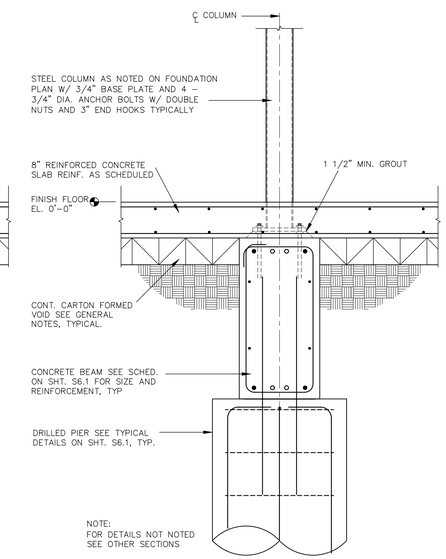

10 SECTION
SCALE : 3/4" = 1'-0"

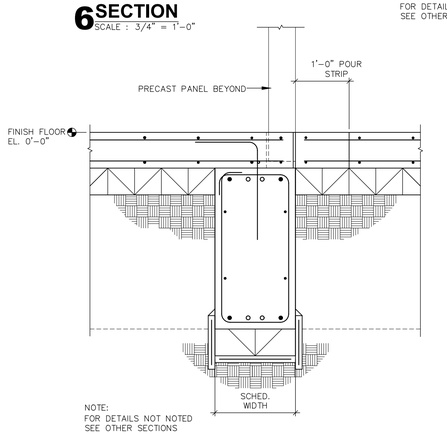

11 SECTION
SCALE : 3/4" = 1'-0"

REFERENCES - BENCHMARK

DATE	REVISIONS	BY

CONSULTANT'S NAME

mijares ● mora
ARCHITECTS INC.
111 N. FESTIVAL
TEL: 915-542-1591
EL PASO, TEXAS 79912
FAX: 542-1594

ENGINEER'S SEAL
STATE OF TEXAS
LARRY C. ZAMORA
33213
REGISTERED
PROFESSIONAL ENGINEER
05/31/2016
ZAMORA ENGINEERING INC.
F-1651

SCALE

DATE	MAY 2016
DESIGN BY	LCZ
DRAWN BY	LCZ
CHKD. BY	LCZ
APPD. BY	
JOB NO.	1603

PROJECT NAME

EL PASO INTERNATIONAL AIRPORT
CHECKED BAGGAGE INSPECTION SYSTEM
6701 CONVAIR RD. EL PASO, TEXAS

EL PASO INTERNATIONAL AIRPORT

CITY OF EL PASO

SHEET TITLE
FOUNDATION SECTIONS

S4.0

FILE NO. 238512

SHEET 6 OF 11

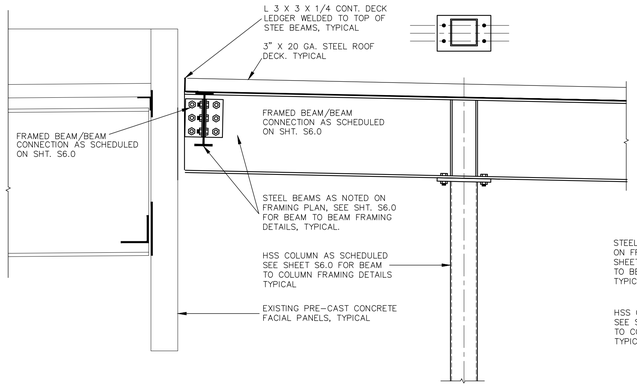

1 SECTION
SCALE : 3/4" = 1'-0"

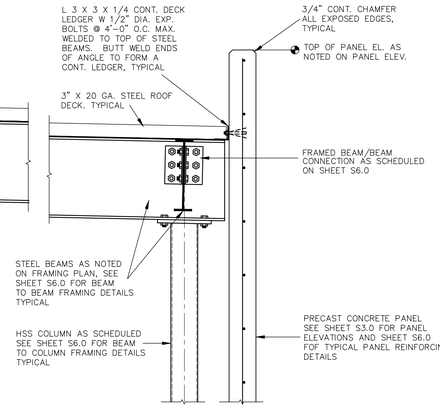

2 SECTION
SCALE : 3/4" = 1'-0"

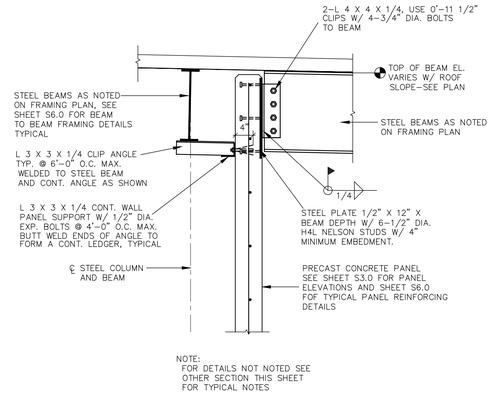

3 SECTION
SCALE : 3/4" = 1'-0"

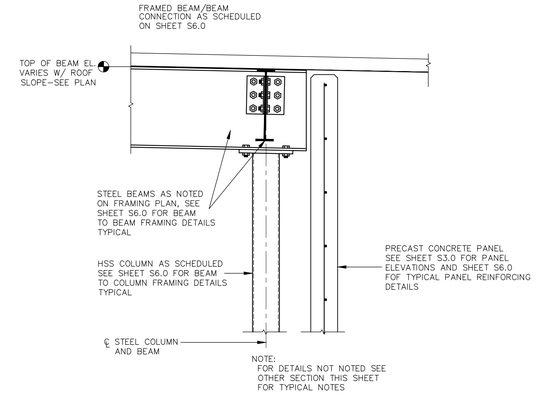

3A SECTION
SCALE : 3/4" = 1'-0"

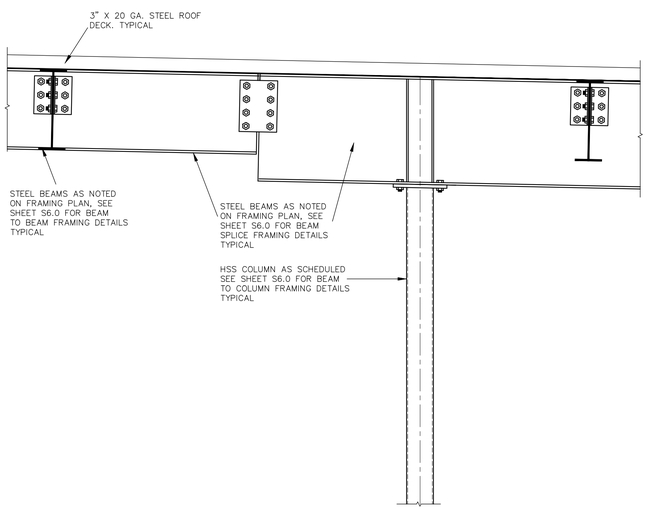

5 SECTION
SCALE : 3/4" = 1'-0"

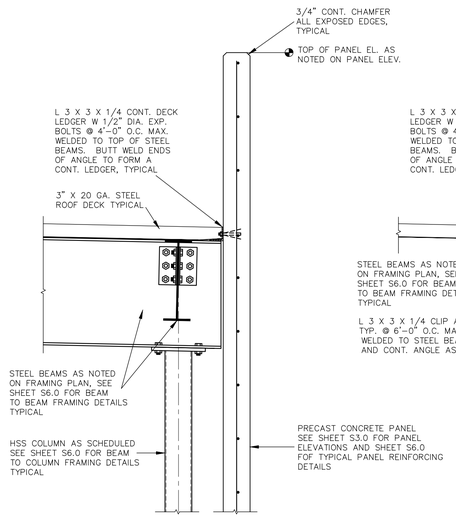

5 SECTION
SCALE : 3/4" = 1'-0"

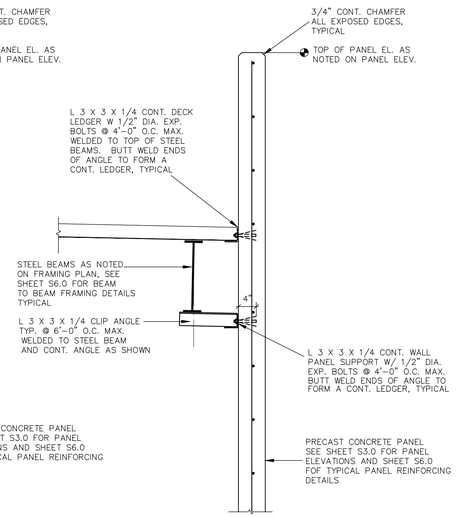

5A SECTION
SCALE : 3/4" = 1'-0"

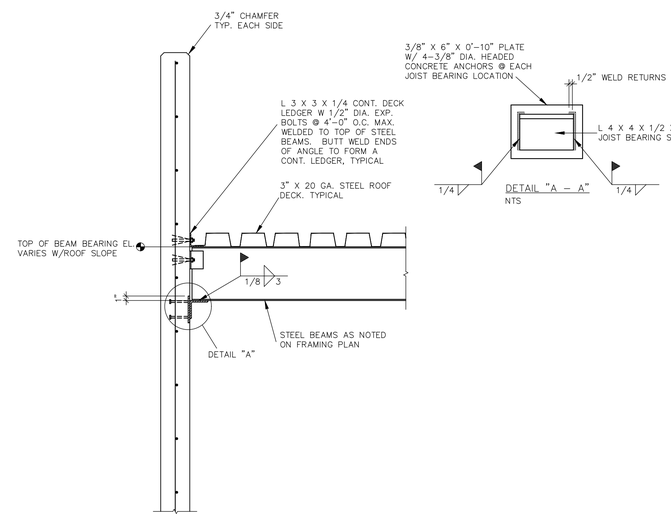

6 SECTION
SCALE : 3/4" = 1'-0"

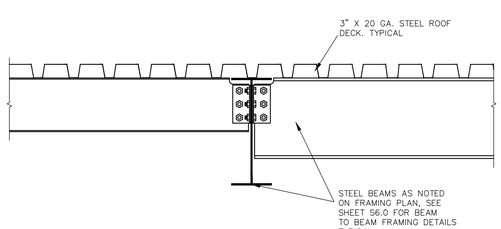

7 SECTION
SCALE : 3/4" = 1'-0"

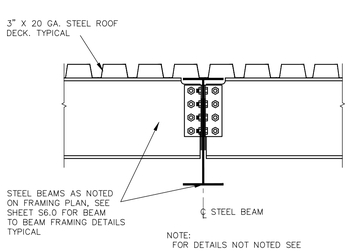

8 SECTION
SCALE : 3/4" = 1'-0"

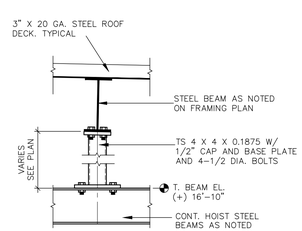

9 SECTION
SCALE : 3/4" = 1'-0"

REFERENCES – BENCHMARK

DATE	REVISIONS	BY

CONSULTANT'S NAME

mijares mora
ARCHITECTS INC.
EL PASO, TEXAS 79912
FAX: 542-1594
111 N. FESTIVAL
TEL: 915-542-1581

ENGINEER SEAL

STATE OF TEXAS
LARRY C. ZAMORA
33213
REGISTERED PROFESSIONAL ENGINEER
05/31/2016
ZAMORA ENGINEERING INC.
F-1631

SCALE

DATE	MAY 2016
DESIGN BY	LCZ
DRAWN BY	LCZ
CHKD. BY	LCZ
APPD. BY	
JOB NO.	1603

PROJECT NAME

EL PASO INTERNATIONAL AIRPORT
CHECKED BAGGAGE INSPECTION SYSTEM
6701 CONVAIR RD. EL PASO, TEXAS

EL PASO INTERNATIONAL AIRPORT

CITY OF EL PASO

SHEET TITLE
ROOF FRAMING SECTIONS

S5.0

FILE NO. 238512

SHEET 9 OF 11

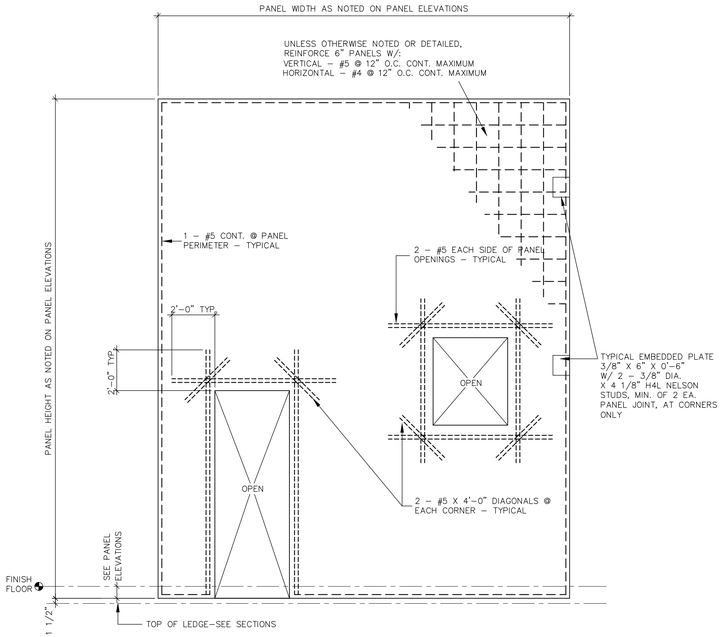

TYPICAL PANEL ELEVATION

NO SCALE

PRECAST WALL PANEL NOTES:

1. MINIMUM CONCRETE COMPRESSIVE STRENGTH @ 28 DAYS SHALL BE 3000 PSI.
2. REINFORCING STEEL SHALL BE ASTM A–615, GRADE 60.
3. PANEL THICKNESS SHALL BE 0'–6", SEE PANEL ELEVATIONS.
4. MINIMUM PANEL REINFORCING SHALL BE AS FOLLOWS:
   A) 0'–6" PANELS:
      VERTICAL – #5 @ 12" O.C. CONT. MAXIMUM
      HORIZONTAL – #4 @ 12" O.C. CONT. MAXIMUM
   B) IN ADDITION ALL PANELS WILL HAVE ADDITIONAL REINFORCING AS FOLLOWS:
      1) 2 – #5 CONT. AROUND ALL OPENINGS, EXTENDED 2'–0" BEYOND OPENING EACH SIDE
      2) 2 – #5 X 4'–0" DIAGONAL AT CORNERS OF ALL OPENINGS.
      3) 1 – #5 CONTINUOUS AROUND PANEL PERIMETER.
      4) PANELS SUPPORTING ROOF BEAMS SHALL BE REINFORCED W/ 5–#5 BARS @ 12" O.C. CENTERED ON BEAM BEARING IN ADDITION TO TYPICAL PANEL REINFORCING.
5. REINFORCING FOR PRECAST CONCRETE WALL PANELS IS DESIGNED FOR "IN PLACE" SERVICE REQUIREMENTS. CONTRACTOR SHALL PROVIDE ANY ADDITIONAL REINFORCEMENT NECESSARY FOR CONSTRUCTION LOADING, INCLUDING LOADS IMPOSED DURING LIFTING, AS WELL AS REINFORCEMENT FOR LIFTING INSERTS.
6. NOT ALL EMBEDDED PLATES ARE SHOWN ON THE PANEL ELEVATIONS. THOSE INDICATED ARE DIAGRAMMATICAL ONLY. CONTRACTOR SHALL COORDINATE THE FINAL SIZE, NUMBER, AND SPACING REQUIRED WITH THE STRUCTURAL STEEL FRAMING PLANS AND DETAILS.
7. THE CONTRACTOR SHALL SUBMIT SHOP DRAWINGS FOR REVIEW INDICATING PLATE TYPES, QUANTITIES AND LOCATIONS.
8. THE PANEL ERECTION BRACING SHALL BE REMOVED ONLY AFTER THE ROOF BEAM AND ROOF DECK ARE IN PLACE AND FULLY FASTENED AS DETAILED.

TAB/WING PLATE SHEAR CONNECTION SCHEDULE

NOMINAL BEAM SIZE	TAB/WING PLATE	BOLTS		REMARKS
		SIZE	TOTAL NUMBER	
W10	3/8" X 4" X 0'–6"	3/4" DIA.	2	
W12, W14, W16	3/8" X 4" X 0'–9"	3/4" DIA.	3	
W18, W21	3/8" X 4" X 1'–0"	3/4" DIA.	4	
W24	3/8" X 4" X 1'–3"	3/4" DIA.	5	

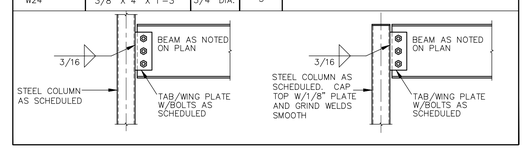

CONTINUOUS BEAM OVER COLUMN/SPLICE CONNECTION SCHEDULE

NOMINAL BEAM SIZE	SPLICE PLATE	BOLTS		REMARKS
		SIZE	TOTAL NUMBER	
W12, W14, W16	2–3/8" X 8" X 0'–9"	3/4" DIA.	6	
W18, W21	2–3/8" X 8" X 1'–0"	3/4" DIA.	8	

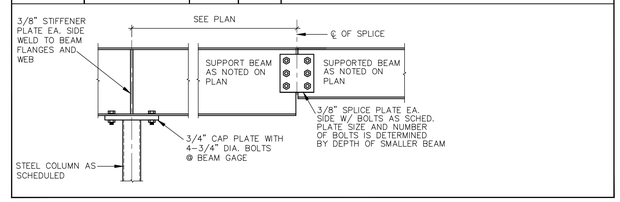

FRAMED BEAM/BEAM SHEAR CONNECTION SCHEDULE

NOMINAL BEAM SIZE	CONNECTION ANGLE	BOLTS				REMARKS
		SIZE	TOTAL NUMBER	TO SUPPORT MEMBER	TO SUPPORTED MEMBER	
W8, W10	2L – 4 X 4 X 1/4 X 0'–5 1/2"	3/4" DIA.	6	4	2	
W12, W14, W16	2L – 4 X 4 X 1/4 X 0'–8 1/2"	3/4" DIA.	9	6	3	
W18, W21	2L – 4 X 4 X 1/4 X 0'–11 1/2"	3/4" DIA.	12	8	4	

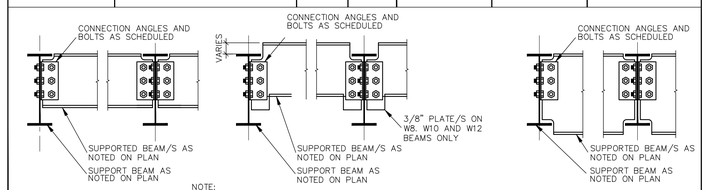

NOTE:
CONNECTION ANGLES AND BOLTS AS SCHEDULED. THE ANGLE/S AND NUMBER OF BOLTS IS DETERMINED BY THE DEPTH OF THE SMALLER BEAM.

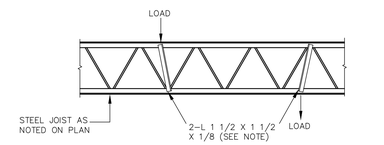

NOTE: JOIST CHORDS ARE NOT DESIGNED FOR CONCENTRATED LOADS BETWEEN PANEL POINTS. IF CONCENTRATED LOADS FROM SUPPORTED OR HANGING EQUIPMENT DOES NOT OCCUR AT A PANEL POINT, FIELD WELD 2–L 1 1/2 X 1 1/2 X 1/8 ANGLES FROM POINT OF LOAD TO NEAREST PANEL POINT ON OPPOSITE CHORD.

JOIST REINFORCING DETAIL

NOT TO SCALE

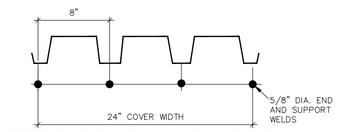

1. THE STEEL ROOF DECK SHALL BE A MINIMUM OF 3" X 20 GAGE, TYPE NA NESTABLE WITH THE FOLLOWING MINIMUM SECTION PROPERTIES PER FOOT OF WIDTH:
   Ip = 0.848 In^4 Sp = 0.501 In^3
   In = 1.079 In^4 Sn = 0.552 In^3
2. MECHANICALLY FASTERN SIDE LAPS OF ADJACENT UNITS AT 24" ON CENTER MAXIMUM USING SELF–TAPPING NO. 8 OR LARGER SELF DRILLING SCREWS.
3. WELD STEEL DECK AT 12" O.C. MAX. TO STEEL ANGLE AT SUPPORTS PARALLEL TO DECK SPAN.

3NA20

STEEL ROOF DECK FASTENING DETAIL

NOT TO SCALE

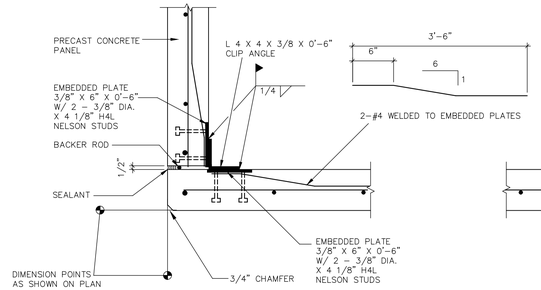

BUTTED CORNER JOINT

NOT TO SCALE

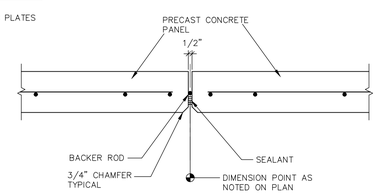

TYPICAL BUTTED JOINT

NOT TO SCALE

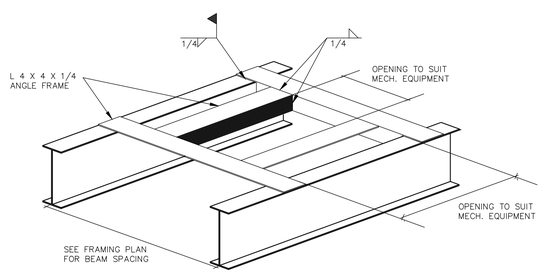

FRAMED OPENING DETAIL FOR MECH. EQUIP.

NOT TO SCALE

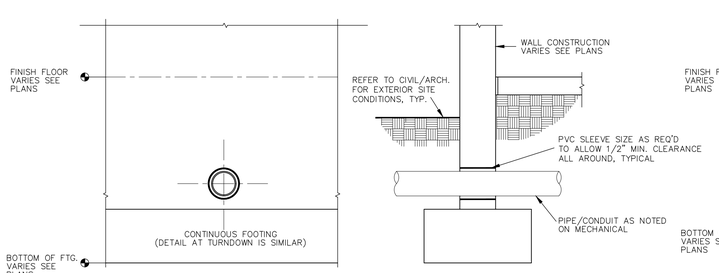

NOTE: UNDER NO CICUMSTANCES WILL ANY TYPE OF PIPE AND OR CONDUIT PASS THROUGH THE FOOTING

CROSSING ABOVE TOP OF CONTINUOUS FOOTING

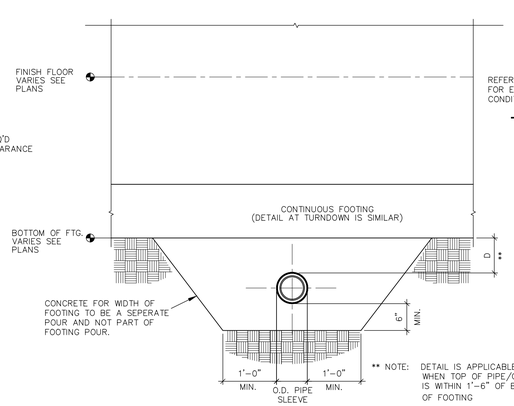

** NOTE: DETAIL IS APPLICABLE ONLY WHEN TOP OF PIPE/CONDUIT IS WITHIN 1'–6" OF BOTTOM OF FOOTING

CROSSING BELOW CONTINUOUS FOOTING

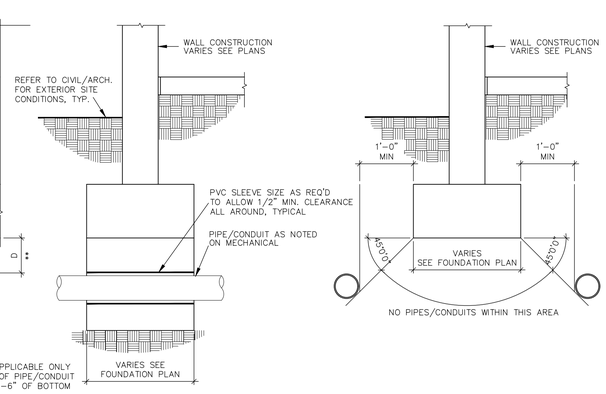

PARALLEL TO CONTINUOUS FOOTING

SPOT FOOTING

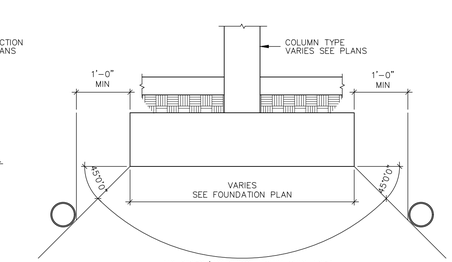

TYPICAL DETAIL PIPES/CONDUITS CROSSING AND/OR NEAR FOUNDATION ELEMENTS

NOT TO SCALE

REFERENCES – BENCHMARK

DATE	REVISIONS	BY

CONSULTANT'S NAME

mijares mora ARCHITECTS INC.
111 N. FESTIVAL
TEL: 915-542-1591
EL PASO, TEXAS 79912
FAX: 542-1594

ENGINEER'S SEAL

LARRY C. ZAMORA
33213
05/31/2016
ZAMORA ENGINEERING INC.
F-1681

SCALE

DATE MAY 2016
DESIGN BY LCZ
DRAWN BY LCZ
CHKD. BY LCZ
APPD. BY
JOB NO. 1603

PROJECT NAME

EL PASO INTERNATIONAL AIRPORT
CHECKED BAGGAGE INSPECTION SYSTEM
6701 CONVAIR RD. EL PASO, TEXAS

CITY OF EL PASO

SHEET TITLE
TYPICAL SECTIONS

S6.0

FILE NO. 238512

SHEET 10 OF 11

CONCRETE GRADE BEAM SCHEDULE

MARK	SIZE BXD	BOTTOM BARS NON-CONT. END	BOTTOM BARS CONT.	TOP BARS NON-CONT. END	TOP BARS CONT.	TOP BARS CONT. END	STIRRUPS SIZE	STIRRUPS SPACING	DIAGRAMS (SUPPORTS (PIERS))	REMARKS
GB1	18" X 36"		5-#8		5-#8		#3			1 @3, 13 @ 6" EA. END REMAINDER @ 16" O.C. MAX. BETWEEN ENDS
GB2	18" X 36"		5-#8		5-#8		#3			1 @ 3" EA. END REMAINDER @ 16" O.C. MAX. BETWEEN ENDS
GB3	18" X 36"		5-#8		5-#8		#3			1 @ 3" EA. END REMAINDER @ 16" O.C. MAX. BETWEEN ENDS
GB4	18" X 36"		5-#7		5-#7		#3			1 @ 3" EA. END REMAINDER @ 16" O.C. MAX. BETWEEN ENDS
GB5	18" X 36"		5-#7		5-#7		#3			1 @ 3" EA. END REMAINDER @ 16" O.C. MAX. BETWEEN ENDS
GB6	18" X 36"		5-#7		5-#7		#3			1 @ 3" EA. END REMAINDER @ 16" O.C. MAX. BETWEEN ENDS
GB7	18" X 36"		5-#7		5-#7		#3			1 @ 3" EA. END REMAINDER @ 16" O.C. MAX. BETWEEN ENDS
GB8	18" X 36"		5-#7		5-#7		#3			1 @ 3" EA. END REMAINDER @ 16" O.C. MAX. BETWEEN ENDS
GB9	18" X 36"		5-#7		5-#7		#3			1 @ 3", 8 @ 8" EA. END REMAINDER @ 16" O.C. MAX. BETWEEN ENDS
GB10	18" X 36"		5-#7		5-#7		#3			1 @ 3", 8 @ 8" EA. END REMAINDER @ 16" O.C. MAX. BETWEEN ENDS
GB11	18" X 36"		5-#7		5-#7		#3			1 @ 3" EA. END REMAINDER @ 16" O.C. MAX. BETWEEN ENDS
GB12	18" X 36"		5-#7		5-#7		#3			1 @ 3" EA. END REMAINDER @ 16" O.C. MAX. BETWEEN ENDS
GB13	18" X 36"		5-#7		5-#7		#3			1 @ 3" EA. END REMAINDER @ 16" O.C. MAX. BETWEEN ENDS
GB14	18" X 36"		5-#7		5-#7		#3			1 @ 3", 10 @ 8" EA. END REMAINDER @ 16" O.C. MAX. BETWEEN ENDS
GB15	18" X 36"		5-#7		5-#7		#3			1 @ 3" EA. END REMAINDER @ 16" O.C. MAX. BETWEEN ENDS
GB16	18" X 36"						#3			1 @ 3" EA. END REMAINDER @ 16" O.C. MAX. BETWEEN ENDS
GB17	18" X 36"		5-#7		5-#7		#3			1 @ 3" EA. END REMAINDER @ 16" O.C. MAX. BETWEEN ENDS
GB18	18" X 36"		5-#7		5-#7		#3			1 @ 3" EA. END REMAINDER @ 16" O.C. MAX. BETWEEN ENDS
GB19	18" X 36"		5-#7		5-#7		#3			1 @ 3" EA. END REMAINDER @ 16" O.C. MAX. BETWEEN ENDS

DRILLED PIER SCHEDULE

MARK	SHAFT DIA.	BELL DIA.	BELL BRNG. ELEV.	REINF. VERTICAL	REINF. TIES
DP1	30"	36"	(-) 21'-0"	10-#8	#3 @ 12" MAX.
DP2	30"	48"	(-) 21'-0"	10-#8	#3 @ 12" MAX.
DP3	30"	42"	(-) 21'-0"	10-#8	#3 @ 12" MAX.
DP4	30"	60"	(-) 21'-0"	10-#8	#3 @ 12" MAX.
DP5	30"	54"	(-) 21'-0"	10-#8	#3 @ 12" MAX.

CONCRETE FLOOR SLAB SCHEDULE

MARK	DEPTH	BOTTOM BARS NON-CONT. END	BOTTOM BARS CONT.	TOP BARS NON-CONT. END	TOP BARS CONT.	TOP BARS CONT. END	STIRRUPS SIZE	STIRRUPS SPACING	DIAGRAMS (SUPPORTS (GRADE BEAMS))	
FS1	8"	#5 @ 12"	#5 @ 12"		#5 @ 12"	#6 @ 12"	—	—		ALTERNATE CONT. STEEL & ADDITIONAL STEEL BARS, I.E., BARS @ 6" O.C.
FS2	8"		#5 @ 12"		#5 @ 12"	#5 @ 12"	—	—		ALTERNATE CONT. STEEL & ADDITIONAL STEEL BARS, I.E., BARS @ 6" O.C.
FS3	8"		#5 @ 12"		#5 @ 12"	#6 @ 12"	—	—		ALTERNATE CONT. STEEL & ADDITIONAL STEEL BARS, I.E., BARS @ 6" O.C.
FS4	8"	#5 @ 12"	#5 @ 12"		#5 @ 12"		—	—		ALTERNATE CONT. STEEL & ADDITIONAL STEEL BARS, I.E., BARS @ 6" O.C.
FS5	8"	#5 @ 12"	#5 @ 12"		#5 @ 12"	#7 @ 12"	—	—		ALTERNATE CONT. STEEL & ADDITIONAL STEEL BARS, I.E., BARS @ 6" O.C.
FS6	8"		#5 @ 12"		#5 @ 12"	#7 @ 12"	—	—		ALTERNATE CONT. STEEL & ADDITIONAL STEEL BARS, I.E., BARS @ 6" O.C.
FS7	8"		#5 @ 12"		#5 @ 12"	#7 @ 12"	—	—		ALTERNATE CONT. STEEL & ADDITIONAL STEEL BARS, I.E., BARS @ 6" O.C.
FS8	8"		#5 @ 12"		#5 @ 12"	#5 @ 12"	—	—		ALTERNATE CONT. STEEL & ADDITIONAL STEEL BARS, I.E., BARS @ 6" O.C.
FS9	8"		#5 @ 12"		#5 @ 12"	#7 @ 12"	—	—		ALTERNATE CONT. STEEL & ADDITIONAL STEEL BARS, I.E., BARS @ 6" O.C.
FS10	8"	#5 @ 12"	#5 @ 12"		#5 @ 12"		—	—		ALTERNATE CONT. STEEL & ADDITIONAL STEEL BARS, I.E., BARS @ 6" O.C.
FS11	8"		#5 @ 12"		#5 @ 12"		—	—		ALTERNATE CONT. STEEL & ADDITIONAL STEEL BARS, I.E., BARS @ 6" O.C.

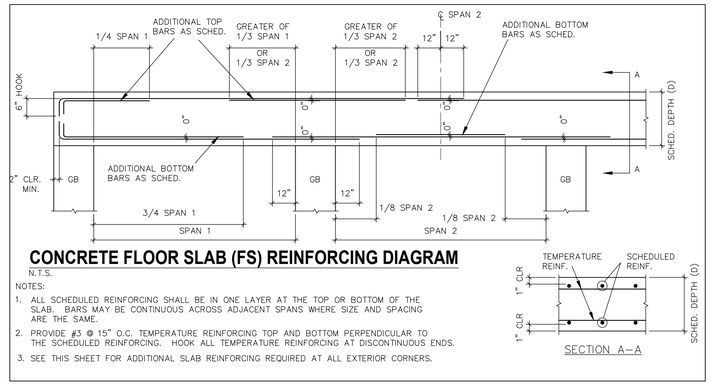

CONCRETE FLOOR SLAB (FS) REINFORCING DIAGRAM

N.T.S.

NOTES:

1. ALL SCHEDULED REINFORCING SHALL BE IN ONE LAYER AT THE TOP OR BOTTOM OF THE SLAB. BARS MAY BE CONTINUOUS ACROSS ADJACENT SPANS WHERE SIZE AND SPACING ARE THE SAME.
2. PROVIDE #3 @ 15" O.C. TEMPERATURE REINFORCING TOP AND BOTTOM PERPENDICULAR TO THE SCHEDULED REINFORCING. HOOK ALL TEMPERATURE REINFORCING AT DISCONTINUOUS ENDS.
3. SEE THIS SHEET FOR ADDITIONAL SLAB REINFORCING REQUIRED AT ALL EXTERIOR CORNERS.

SECTION A–A

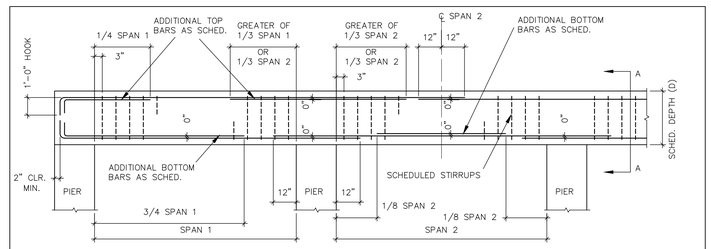

CONCRETE GRADE BEAM REINFORCING DIAGRAM

N.T.S.

NOTES:

1. ALL BEAMS SHALL HAVE STIRRUPS THROUGHOUT THEIR ENTIRE LENGTH. ALL STIRRUPS SHALL BE SECURELY WIRED TO LONGITUDINAL BARS. STIRRUP HOOKS SHALL BE ON INTERIOR FACE OF PERIMETER BEAMS.
2. UNLESS OTHERWISE NOTED, ALL SCHEDULED REINFORCING SHALL BE IN ONE LAYER AT THE TOP OR BOTTOM OF THE BEAM. BARS MAY BE CONTINUOUS ACROSS ADJACENT SPANS WHERE SIZE AND SPACING ARE THE SAME.
3. SEE SHEET S-23 FOR GRADE BEAM INTERSECTION DETAILS.

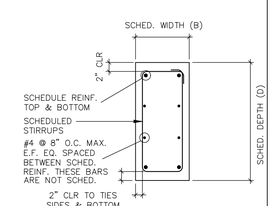

SECTION A–A

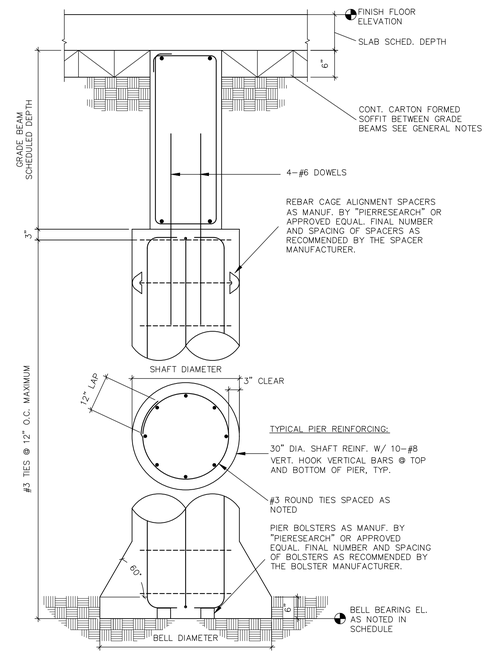

TYPICAL DRILLED PIER DETAIL

N.T.S.

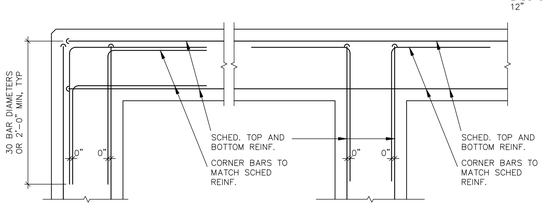

CORNER **INTERSECTION**

TYPICAL GRADE BEAM INTERSECTION DETAILS

N.T.S.

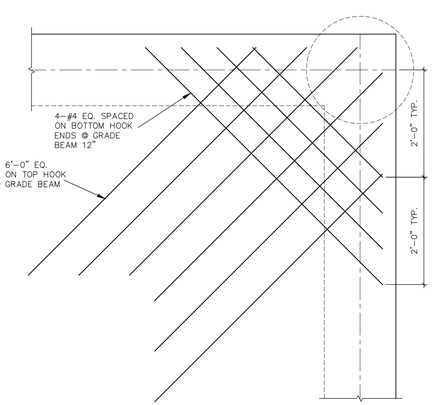

TYP. ADD'NL REINF. IN SLAB AT ALL EXTERIOR CORNERS

N.T.S.

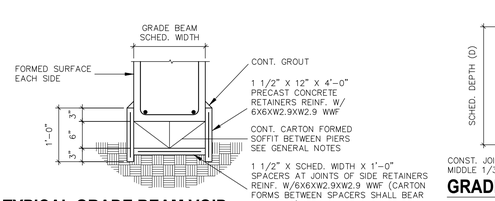

TYPICAL GRADE BEAM VOID

N.T.S.

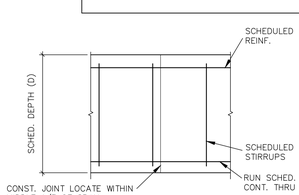

GRADE BEAM CONSTRUCTION JOINT

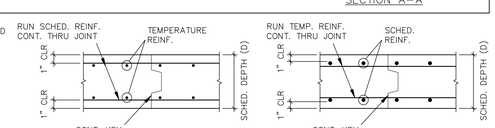

JOINT PERPENDICULAR TO SCHED. REINF. JOINT PARALLEL TO SCHED. REINF.

STRUCTURAL SLAB CONSTRUCTION JOINTS

REFERENCES – BENCHMARK

DATE	REVISIONS	BY

CONSULTANT'S NAME

mijares mora
ARCHITECTS INC.
111 N. FESTIVAL
TEL: 915-542-1581
EL PASO, TEXAS 79912
FAX: 542-1594

ENGINEER'S SEAL

STATE OF TEXAS
LARRY C. ZAMORA
33213
REGISTERED PROFESSIONAL ENGINEER
05/31/2016
ZAMORA ENGINEERING INC.
F-1651

SCALE

DATE	MAY 2016
DESIGN BY	LCZ
DRAWN BY	LCZ
CHKD. BY	LCZ
APPD. BY	
JOB NO.	1603

PROJECT NAME

EL PASO INTERNATIONAL AIRPORT
CHECKED BAGGAGE INSPECTION SYSTEM
6701 CONVAIR RD.
EL PASO, TEXAS

EL PASO INTERNATIONAL AIRPORT

CITY OF EL PASO

SHEET TITLE

TYPICAL CONCRETE SCHEDULES AND DETAILS

S6.1

FILE NO. 238512

SHEET 11 OF 11

MECHANICAL SYMBOLS AND ABBREVIATIONS

[SOME SYMBOLS MAY NOT BE USED ON THIS PROJECT]

PIPING SYMBOLS

GENERAL

SYMBOL	DESCRIPTION
	AUTOMATIC AIR VENT
	BACK FLOW PREVENTER
	BALL JOINT
	CAP
	FLEXIBLE CONNECTION (PIPE)
	FLOW DIRECTION
PS	PRESSURE SWITCH
FS	FLOW SWITCH
	PIPE ANCHOR
	PIPE DROP
	PIPE RISER
	STRAINER (Y TYPE) W/ BLOWDOWN & CAP
	UNION
	SPRING ISOLATOR – PIPE OR EQUIPMENT
	VIBRATION ISOLATOR
	NEW EQUIPMENT
	EXISTING EQUIPMENT
	NEW PIPING
	PUMP (SCHEMATIC)
T 3	THERMOSTAT SERVING ZONE 3

AIR CONDITIONING

SYMBOL	DESCRIPTION
RL	REFRIGERANT LIQUID
RS	REFRIGERANT SUCTION
RD	REFRIGERANT DISCHARGE
—	MAKE-UP WATER
CD	CONDENSATE DRAIN
PCD	PUMPED CONDENSATE DRAIN
CHWS	CHILLED WATER SUPPLY
CHWR	CHILLED WATER RETURN
HWS	HOT WATER SUPPLY
HWR	HOT WATER RETURN

VALVES

SYMBOL	DESCRIPTION
	BALL VALVE
	BUTTERFLY VALVE
	CHECK VALVE
E	EXPANSION VALVE
	GATE VALVE
	GLOBE VALVE
S	LIQUID SOLENOID VALVE
	MANUAL 3-WAY CONTROL VALVE
	MOTOR OPERATED, STRAIGHT THRU VALVE
	MOTOR OPERATED, 3-WAY CONTROL VALVE
	O.S.& Y. GATE VALVE
	CIRCUIT BALANCING VALVE
	PRESSURE REDUCING VALVE
	PRESSURE RELIEF VALVE
T&P	PRESSURE & TEMP. RELIEF VALVE
	THERMOSTATIC EXPANSION VALVE
	VALVE W/ HOSE THREAD

DRAWING SYMBOLS

SYMBOL	DESCRIPTION
CHP-1	EQUIPMENT MARK NUMBER – CHP
2	KEYED NOTE 2
1 / M-2	SECTION ARROW – DETAIL 1, SHEET M-2
A,150,12X12	TYPE 'A' AIR DEVICE, 150 CFM W/ 12" X 12" NECK. WHEN NOT INDICATED ON DRAWING REFER TO SCHEDULE.
A,300,12x12,8"N	TYPE 'A' AIR DEVICE, 300 CFM W/ 12"x12" FACE, 8" NECK. WHEN NOT INDICATED ON DRAWING REFER TO SCHEDULE.
A,300,2SLOT,48"L	TYPE 'A' AIR DEVICE, 300 CFM, 2 SLOTS 48" LONG. WHEN NOT INDICATED ON DRAWING REFER TO SCHEDULE.

DUCTWORK SYMBOLS

GENERAL

SYMBOL	DESCRIPTION
	ROUND DUCT SECTION
12"X24"	FLAT OVAL DUCT SECTION
12"ø	12" DIA. ROUND DUCT
12"X24"	12" BY 24" FLAT OVAL DUCT
	SUPPLY DUCT SECTION, POSITIVE PRESS.
	EXH., RET., O.A. DUCT SECTION NEGATIVE PRESS.
12/8	DUCTWORK, FIRST NO. IS VISIBLE DIM.
12/8	EXISTING DUCTWORK (LIGHT LINES)
	BRANCH DUCT
	"Y" BRANCH
	MEDIUM PRESSURE DUCT BRANCH
	ACOUSTICALLY LINED DUCT
A.D.	DUCT ACCESS DOOR
	FLEXIBLE CONNECTION (DUCT)
R	CHANGE OF ELEVATION IN DIRECTION SHOWN R-RISE D-DROP
F.D.A	FIRE DAMPER TYPE "A"
F.S.D.	FIRE & SMOKE DAMPER
	BRANCH DUCT WITH VOLUME DAMPER
	SIDEWALL REGISTER
	DUCT WITH TURNING VANES
S.D.	SPLITTER DAMPER
PBD	DAMPER TYPE INDICATED (OBD, PBD)
M PBD	MOTORIZED DAMPER TYPE INDICATED (OBD, PBD)
	VANED ELBOW (PROVIDE ALL SQUARE OR RECTANGULAR ELBOWS W/ VANES EVEN IF SYMBOL IS MISSING)
	VANED ELBOW (SHORT RADIUS)
	STANDARD RADIUS ELBOW
	LOUVER
	SUPPLY AIR DIFFUSER – ARROWS INDICATE DIRECTION OF THROW
	RETURN AIR GRILLE
	EXHAUST AIR GRILLE
	LINEAR SUPPLY AIR DEVICE
	LINEAR RETURN AIR DEVICE
	FLEXIBLE DUCT (SINGLE LINE DUCT)
	FLEXIBLE DUCT
	FAN (SCHEMATIC)
DPG	DIFFERENTIAL PRESSURE GAUGE
	NEW CONNECTION TO EXISTING

ABBREVIATIONS

ABBREV.	DESCRIPTION
ABV	ABOVE
AC	ABOVE CEILING
A/C	AIR CONDITIONED
ACCH	AIR COOLED CHILLER
AD	ACCESS DOOR
AF	AIR FOIL
AFF	ABOVE FINISHED FLOOR
AFMS	AIR FLOW MEASURING STATION
AHU	AIR HANDLING UNIT
AMCA	AIR MOVING AND CONDITIONING ASSOCIATION, INC.
AP	ACCESS PANEL
APPROX	APPROXIMATE
ARCH	ARCHITECTURAL
ARI	AIR CONDITIONING REFRIGERATION INSTITUTE
ANSI	AMERICAN NATIONAL STANDARD INSTITUTE
AS	AIR SEPARATOR
ASME	AMERICAN SOCIETY OF MECHANICAL ENGINEERS
ASTM	AMERICAN SOCIETY FOR TESTING MATERIALS
AV	AUTOMATIC AIR VENT ASSEMBLY
B	BOILER
BDD	BACK DRAFT DAMPER
BHP	BRAKE HORSEPOWER
BI	BACKWARD INCLINED
BLDG	BUILDING
BOD	BOTTOM OF DUCT
BOP	BOTTOM OF PIPE
BSMT	BASEMENT
BTU	BRITISH THERMAL UNIT
CC	COOLING COIL
CDP	CONDENSATE DRAIN PUMP
CFM	CUBIC FEET PER MINUTE
CWP	CONDENSER WATER PUMP
CLG	CEILING
CWR	COOL/HEAT WATER RETURN
CWS	COOL/HEAT WATER SUPPLY
CO	CLEANOUT
COND	CONDENSATE
CONN	CONNECTION
CONT	CONTINUATION
CP	CONTROLLABLE PITCH
CT	COOLING TOWER
CU	CONDENSING UNIT
CWP	CONDENSER WATER PUMP
CW	COLD WATER
℄	CENTER LINE
D	DRAIN
DB	DRY BULB
DCP	DATA COLLECTION PANEL
DG	DOOR GRILLE
DIA	DIAMETER
DIFF	DIFFUSER
DN	DOWN
DWG	DRAWING
DX	DIRECT EXPANSION
EA	EACH
EAT	ENTERING AIR TEMPERATURE
EDH	ELECTRIC DUCT HEATER
EF	EXHAUST FAN
ELEC	ELECTRICAL
ELEV	ELEVATION
EG	EXHAUST GRILLE
ENT	ENTERING
EQUIP	EQUIPMENT
ER	EXHAUST REGISTER
ESP	EXTERNAL STATIC PRESSURE
EWT	ENTERING WATER TEMPERATURE
EXH	EXHAUST
EXIST	EXISTING
F	DEGREES FAHRENHEIT
FC	FAN COIL
FD	FIRE DAMPER
FLEX	FLEXIBLE
FLG	FLANGE
FLR	FLOOR
FM	FACTORY MUTUAL
FO	FLAT OVAL DUCT
FPM	FEET PER MINUTE
FT	FEET, FOOT
FS	FLOW SWITCH
FSD	FIRE SMOKE DAMPER
GAL	GALLON
GALV	GALVANIZED

ABBREV.	DESCRIPTION
GPM	GALLONS PER MINUTE
HP	HORSEPOWER
HR	HOUR
H	HIGH, HEIGHT
HVAC	HEATING/VENTILATING/ AIR CONDITIONING
HZ	HERTZ
ID	INSIDE DIAMETER
IE	INVERT ELEVATION (FLOW LINE)
IH	INTAKE HOOD
IN	INCHES
INSUL	INSULATION
IN WG	INCHES OF WATER GAUGE
KH	KITCHEN HOOD
KW	KILOWATT(S)
L	LONG, LENGTH
L	LOUVER
LAT	LEAVING AIR TEMPERATURE
LB	POUND
MAX	MAXIMUM
MD	MANUAL DAMPER
MECH	MECHANICAL
MIN	MINIMUM
MUA	MAKE UP AIR UNIT
NA	NOT APPLICABLE
NIC	NOT IN CONTRACT
NO	NORMALLY OPEN
NTS	NOT TO SCALE
OA	OUTSIDE AIR
OBD	OPPOSED BLADE DAMPER
OAH	OUTSIDE AIR INTAKE HOOD
OC	ON CENTER
PBD	PARALLEL BLADE DAMPER
PCHWP	PRIMARY CHILLED HOT WATER PUMP
PRESS	PRESSURE
PRV	PRESSURE REDUCING VALVE
PSIG	POUNDS PER SQUARE INCH (GAUGE)
PHL	PRESSURE HIGH LIMIT
R-22	REFRIGERANT (TYPE AS NOTED)
RA	RETURN AIR
RE: 4M-07	REFER TO DETAIL 4, SHEET M-07
RET	RETURN
RG	RETURN GRILLE
RH	RELIEF HOOD
RH	RELATIVE HUMIDITY
RF	RELIEF FAN
RPM	REVOLUTIONS PER MINUTE
SA	SUPPLY AIR
SAT	SOUND ATTENUATOR
SCH	SCHEDULE
SCHWP	SECONDARY CHILLED WATER PUMP
SHWP	SECONDARY HOT WATER PUMP
SD	SMOKE DAMPER
SEC	SECOND
SF	SUPPLY FAN
SMACNA	SHEET METAL AND AIR CONDITIONING CONTRACTORS NATIONAL ASSOCIATION
SP	STATIC PRESSURE
SPEC	SPECIFICATION
SF	SQUARE FOOT
STD	STANDARD
STL	STEEL
SW	SWITCH
T.D.	TRANSFER DUCT
TEMP	TEMPERATURE
T'STAT	THERMOSTAT
TU	TERMINAL UNIT
TXV	THERMOSTATIC EXPANSION VALVE
TYP	TYPICAL
VAV	VARIABLE AIR VOLUME
VB	VALVE BOX
VEL	VELOCITY
VENT	VENTILATE
VF	VENTILATION FAN
VFD	VARIABLE FREQUENCY DRIVE
VOL	VOLUME
VOLT	VOLTAGE
W	WIDE, WIDTH
W/	WITH
WB	WET BULB
W/O	WITHOUT
WL	WALL LOUVER

GENERAL NOTES:

1. ALL WORK SHALL BE PERFORMED IN ACCORDANCE WITH APPLICABLE LOCAL, STATE, AND FEDERAL CODES AND STANDARDS. CRAFTSMANSHIP AND MATERIAL SHALL BE OF THE FINEST QUALITY.
2. ALL DUCTWORK SHALL BE INSTALLED AND SUPPORTED IN ACCORDANCE WITH THE LATEST EDITION OF SMACNA STANDARD HVAC DUCT CONSTRUCTION STANDARDS, METAL AND FLEXIBLE".
3. UNLESS NOTED OTHERWISE, ALL CAPACITIES INDICATED ARE AT SITE CONDITIONS. ALL EQUIPMENT SHALL BE ADJUSTED, MODIFIED, AND ORDERED TO ACCOMMODATE SITE CONDITIONS (4000 FT).
4. THE CONTRACTOR SHALL REVIEW THE CONTRACT DOCUMENTS FULLY PRIOR TO THE SUBMITTAL PHASE OF THE PROJECT. CONFLICTS WITHIN AND BETWEEN THE CONTRACT DOCUMENTS SHALL BE NOTED IN WRITING TO THE ENGINEER PRIOR TO SUBMITTING DATA SHEETS FOR REVIEW.
5. IT IS THE INTENT OF THE DRAWINGS TO SHOW A COMPLETE DESIGN IN EVERY RESPECT. THE CONTRACTOR SHALL BE RESPONSIBLE FOR A COMPLETE AND FULLY FUNCTIONAL INSTALLATION. THE PRIME CONTRACTOR SHALL BE RESPONSIBLE FOR COORDINATING THE WORK BETWEEN SUBCONTRACTORS TO ASSURE THAT THE INSTALLATION WILL BE COMPLETE WITHOUT ADDITIONAL COST TO THE CONTRACT.
6. BRANCH DUCTS SERVING DIFFUSERS SHALL BE THE SAME SIZE AS THE DIFFUSER NECK UNLESS NOTED OTHERWISE.
7. ALL PIPING & DUCTS IN FINISHED ROOMS OR SPACES SHALL BE CONCEALED IN FURRED CHASES OR INSTALLED ABOVE SUSPENDED CEILING UNLESS NOTED DIFFERENT. AVOID EXCESSIVE OFFSETS IN DUCTWORK AND PIPING UNLESS SPECIFICALLY INDICATED
8. FIRST FIGURE OF DUCT SIZE INDICATES DIMENSION OF FACE SHOWN OR INDICATED, ALL DUCT DIMENSIONS ARE CLEAR INSIDE DIMENSION.
9. MAINTAIN MINIMUM CLEARANCES IN FRONT OF ALL CONTROL AND ELECTRIC PANELS ON EQUIPMENT SUCH AS FANS, AIR TERMINAL UNITS, ETC. IN ACCORDANCE WITH THE FOLLOWING: 120 V = 36", 208 V = 42", 460 V = 48". CLEARANCE MAY BE MEASURED THROUGH REMOVABLE CEILING GRID OR ACCESS PANEL. WHERE FACTORY MOUNTED PANELS DO NOT ALLOW ADEQUATE CLEARANCE, RELOCATE AND REMOUNT AS REQUIRED. ALL FACTORY WARRANTIES SHALL BE MAINTAINED.
10. AIR DEVICES SIZES SHOWN ON SCHEDULES ARE NECK SIZES, UNLESS NOTED OTHERWISE.
11. BOTH THE SUBCONTRACTOR FOREMAN AND PRIME CONTRACTOR FOREMAN SHALL VISUALLY INSPECT THE QUALITY AND COMPLETENESS OF INSTALLATION PRIOR TO REQUESTING A FIELD OBSERVATION BY THE ENGINEER. PROVIDE A MINIMUM OF FORTY EIGHT HOUR WRITTEN NOTICE TO THE ENGINEER PRIOR TO ANY FIELD OBSERVATION REQUIREMENTS.
12. DO NOT COVER ANY MECHANICAL OR PLUMBING WORK IN WALLS, ABOVE CEILINGS, ETC. PRIOR TO REQUESTING OBSERVATION BY THE ENGINEER. ALL WORK COVERED WITHOUT OBSERVATION BY THE ENGINEER SHALL BE UNCOVERED FOR OBSERVATION, AT NO ADDITIONAL COST.
13. COORDINATE THE INSTALLATION OF DUCTWORK AND CEILING DIFFUSERS WITH THE STRUCTURE, LIGHTS, FIRE SPRINKLER HEADS, AND CEILING GRID. WHERE THE ALTERATION OF DUCT SIZES ARE NECESSARY, MAINTAIN CROSS-SECTIONAL AREAS.
14. INSTALL EQUIPMENT TO AVOID SOUND OR NOISE TRANSMISSION TO OCCUPIED SPACES.
15. ALL EQUIPMENT, FIXTURES, PIPING, AND DUCTWORK SHALL BE INSTALLED PARALLEL TO BUILDING LINES.
16. CONTRACTOR SHALL COORDINATE WITH OTHER TRADES. CONFLICTS SHALL BE BROUGHT TO THE ATTENTION OF THE PRIME CONTRACTOR, ENGINEER AND, AS NECESSARY, THE OWNER.
17. TEST, ADJUST, AND BALANCE ALL AIR AND WATER SYSTEMS AFTER INSTALLATION IS COMPLETE. SUBMIT REPORTS TO ENGINEER FOR REVIEW AND APPROVAL.
18. TURNOVER ALL EQUIPMENT AND MATERIAL OWNING, OPERATING AND MAINTENANCE (OM) MANUALS TO ENGINEER FOR REVIEW & APPROVAL AFTER INSTALLATION IS COMPLETE.
19. BOTTOM OF DUCT ELEVATION INDICATED ON THE DRAWING INDICATES THE APPROXIMATE HEIGHT ABOVE FINISHED FLOOR LEVEL TO THE UNDERSIDE OF THE DUCT. THIS INFORMATION IS PROVIDED AS AN AID TO COORDINATION, THE CONTRACTOR SHALL VERIFY ALL DIMENSIONS ON SITE.
20. KEEP DUCTWORK AND PIPING INTERIOR CLEAN AND FREE OF DEBRIS THROUGHOUT THE PROJECT. CAP ALL PIPING AND DUCTWORK EXPOSED TO THE ELEMENTS.
21. MAINTAIN A MINIMUM OF 10' – 0" DISTANCE BETWEEN ALL EXHAUST FAN AND RELIEF HOOD DISCHARGE LOCATION AND O.A. INTAKES.
22. REFER TO ARCHITECTURAL DRAWINGS FOR EXACT LOCATION OF AIR DEVICES.
23. INSULATED PIPEWORK SHALL BE INSTALLED SO THAT FULL THICKNESS INSULATION CAN BE APPLIED TO EACH PIPE.
24. ALL FLOOR BRANCHES OFF PIPE RISERS SHALL BE PROVIDED W/ SHUT OFF VALVES & VALVED AND CAPPED DRAIN CONNECTION.
25. LOW PRESSURE DUCTS SHALL BE CONSTRUCTED IN ACCORDANCE WITH SMACNA HVAC DUCT CONSTRUCTION STANDARDS TABLE 1-5. EXCEPT THAT THE MINIMUM SHEET METAL THICKNESS SHALL BE 24 GAGE.
26. 30% OF LOW PRESSURE DUCT SYSTEM, INCLUDING EXHAUST SYSTEMS, SHALL BE TESTED IN ACCORDANCE WITH SMACNA HVAC AIR DUCT LEAKAGE TEST MANUAL. IF LEAKAGE TEST RESULTS EXCEED THE MAX. ALLOWABLE RATE, THE ENTIRE DUCT SYSTEMS SHALL BE TESTED AND DUCT LEAKAGE SHALL BE CORRECTED UNTIL SATISFACTORY RATES ARE OBTAINED.
27. CONTRACTOR SHALL COMPLY WITH ALL REQUIREMENTS LISTED ON THE DRAWINGS AND SPECIFICATIONS INCLUDING THOSE LISTED UNDER ENERGY COMPLIANCE REPORT.
28. PROVIDE AND INSTALL MANUAL BALANCING DAMPERS AT ALL DUCT BRANCHES.
29. CONTRACTOR TO FIELD VERIFY EXISTING CONDITIONS, ANY DISCREPANCIES BETWEEN DRAWINGS AND FIELD CONDITIONS SHALL BE BROUGHT TO THE ATTENTION OF THE ENGINEER OF RECORD IN WRITING.
30. OWNER WILL OCCUPY ADJACENT SPACES DURING RENOVATION. CONSTRUCTION WORK SHALL BE CONDUCTED IN A MANNER TO MINIMIZE DISTURBANCES TO TENANTS.
31. ALL MECHANICAL AND PLUMBING EQUIPMENT TO BE REMOVED SHALL BE SALVAGED TO OWNER, UNLESS OWNER DECIDES EQUIPMENT SHALL BE REMOVED FROM SITE AND DISPOSED OF IN A LAWFUL MANNER.
32. ANY DAMAGES CAUSED BY DEMOLITION TO ADJACENT NON-WORKING AREAS SHALL BE PROMPTLY REPAIRED BY CONTRACTOR.
33. OWNER RESERVES THE RIGHT FOR CONTRACTOR TO PERFORM WORK DURING OFF-HOURS.
34. INTERRUPTIONS OF BUILDING SYSTEMS, SERVICES, AND UTILITIES SHALL BE REQUESTED AT LEAST 7 WORKING DAYS PRIOR TO INTERRUPTIONS AND APPROVED BY OWNER.
35. CONTRACTOR SHALL PROVIDE IN THEIR BID TEST, ADJUST, AND BALANCE WORK OF THE EXISTING MECHANICAL EQUIPMENT THAT'S TO REMAIN INCLUDING BUT NOT LIMITED TO TERMINAL UNITS, FAN COIL UNITS, AIR HANDLING UNITS, EXHAUST FANS, DIFFUSERS, PUMPS, ETC. THAT WILL BE AFFECTED BY THE NEW MECHANICAL EQUIPMENT INSTALLATION (E.G. TERMINAL UNITS, AIR HANDLING, EXHAUST FANS, PUMP) CONTRACTOR SHALL REFERENCE EXISTING DRAWINGS FROM OWNER FOR AIR AND WATER FLOW REQUIREMENTS.
36. EXISTING HYDRONIC PIPE ROUTING WAS OBTAINED BY EXISTING DRAWINGS AND HAVE NOT BEEN COMPLETELY VERIFIED. ANY DISCREPANCIES BETWEEN DRAWINGS AND ACTUAL SITE CONDITIONS TO BE BROUGHT TO THE ATTENTION OF THE ENGINEER OF RECORD IN WRITING.

TEXAS REGISTRATION: F-000014
Alegro Engineering
Consulting Engineers
5822 Cromo Dr. Suite 105
El Paso, Texas 79912
Tel. 915.533.0700

INDEX OF DRAWINGS

M0.00 MECHANICAL SYMBOLS AND ABBREVIATION
M0.01 MECHANICAL SCHEDULES
M0.02 MECHANICAL CALCULATIONS
M0.03 MECHANICAL CALCULATIONS
M0.04 MECHANICAL CALCULATIONS
M0.05 MECHANICAL CALCULATIONS AND ENERGY REPORT
M1.00 DEMOLITION SITE PLAN
M1.01 SITE PLAN NEW WORK
M2.00 OVERALL MECHANICAL DEMOLITION FLOOR PLAN
M2.01 PARTIAL MECHANICAL DEMOLITION FLOOR PLAN
M2.02 PARTIAL MECHANICAL DEMOLITION FLOOR PLAN
M3.00 OVERALL MECHANICAL DEMOLITION PIPING PLAN
M3.01 PARTIAL MECHANICAL DEMOLITION PIPING PLAN
M3.02 PARTIAL MECHANICAL DEMOLITION PIPING PLAN
M4.00 OVERALL MECHANICAL FLOOR PLAN – NEW WORK
M4.01 PARTIAL MECHANICAL FLOOR PLAN – NEW WORK
M4.02 PARTIAL MECHANICAL FLOOR PLAN – NEW WORK
M4.03 PARTIAL MECHANICAL FLOOR PLAN – NEW WORK
M5.00 PARTIAL MECHANICAL PIPING FLOOR PLAN – NEW WORK
M5.01 PARTIAL MECHANICAL PIPING PLAN – NEW WORK
M5.02 PARTIAL MECHANICAL PIPING PLAN – NEW WORK
M5.03 PARTIAL MECHANICAL PIPING PLAN – NEW WORK
M6.00 PARTIAL MECHANICAL FLOOR PLAN – NEW WORK
M7.00 PARTIAL MECHANICAL ROOF PLAN – NEW WORK
M8.00 MECHANICAL SECTIONS
M9.00 MECHANICAL CHILLED WATER SCHEMATIC DIAGRAM
M9.01 MECHANICAL HOT WATER SCHEMATIC DIAGRAM
M10.00 MECHANICAL CONTROLS
M10.01 MECHANICAL CONTROLS
M10.02 MECHANICAL CONTROLS
M11.00 MECHANICAL FIRE PROTECTION PLAN – NEW WORK
M12.00 MECHANICAL DETAILS
M12.01 MECHANICAL DETAILS
M12.02 MECHANICAL DETAILS

REFERENCES -- BENCHMARK

REVISIONS	DATE	BY

CONSULTANT'S NAME

mijares mora
ARCHITECTS INC.
111 N. FESTIVAL
TEL: 915-542-1591
EL PASO, TEXAS 79912
FAX: 542-1594

ARCHITECT'S SEAL

STATE OF TEXAS
ROLANDO LEGARRETA
84714
LICENSED PROFESSIONAL ENGINEER

ALTERATION OF A SEALED DOCUMENT WITHOUT PROPER NOTIFICATION TO THE RESPONSIBLE ENGINEER IS AN OFFENSE UNDER THE TEXAS ENGINEERING PRACTICE ACT.

SCALE

DATE MAY 2016
DESIGN BY ALEGRO
DRAWN BY GAG
CHKD. BY GAG
APPD. BY RL
JOB NO. 14-154

PROJECT NAME

EL PASO INTERNATIONAL AIRPORT CHECKED BAGGAGE INSPECTION SYSTEM

6701 CONVAIR RD. EL PASO, TEXAS

EL PASO INTERNATIONAL AIRPORT

CITY OF EL PASO

SHEET TITLE

MECHANICAL SYMBOLS AND ABBREVIATIONS

M0.00

FILE NO. XXXX

SHEET 1 OF 34

AIR DEVICE SCHEDULE

MARK	SERVICE	TYPE	FACE APPEARANCE	FACE SIZE (IN.)	THROW PATTERN	MATERIAL	FINISH	MANUFACTURER	MODEL	NOTES
A	SUPPLY	CEILING	LOUVERED	24x24	AS SHOWN	STEEL	WHITE	NAILOR	6250	1,2
B	RETURN	CEILING	EGGCRATE- 1"	24X24	N/A	STEEL	WHITE	NAILOR	61EC	1
C	SUPPLY	WALL	GRILLE	AS SHOWN	N/A	STEEL	WHITE	NAILOR	61SV	1
D	RETURN	WALL	GRILLE	AS SHOWN	N/A	STEEL	WHITE	NAILOR	6145H	1
E	SUPPLY	GRILLE	DRUM LOUVERED	AS SHOWN	N/A	ALUMINUM	WHITE	NAILOR	45DL2	1
F	RETURN	GRILLE	GRILLE	AS SHOWN	N/A	STEEL	WHITE	NAILOR	6145H-HD	1
G	EXHAUST	GRILLE	HEAVY DUTY BAR	AS SHOWN	N/A	ALUMINUM	WHITE	NAILOR	5130H-HD	1

NOTES:
1. FRAMES SHALL BE SUITABLE FOR SECURING TO THE CONSTRUCTION MATERIAL.
2. PROVIDE ROUND TO SQUARE OR ROUND TO ROUND TRANSITION WHEN REQUIRED.

EVAPORATIVE COOLING UNIT SCHEDULE

TAG	SERVICE	TYPE	AIRFLOW (CFM)	EXTERNAL STATIC PRESSURE (IN.W.G.)	FAN TYPE	FAN SPEED (RPM)	FAN MOTOR SIZE (HP)	FAN MOTOR SPEED (RPM)	FAN VOLTS/ PHASE	PUMP QUANTITY	PUMP MOTOR SIZE (WATTS)	PUMP VOLTS/ PHASE	APPROX OPERATING WEIGHT(LB.)	MANUFACTURER	MODEL	NOTES
ECU-1	133 SERVICE BAYS	12" CELDEK	16,000	0.3	FC	373	5	1,725	460/3	2	105	115/1	830	PMI/AEROCOOL	ID701	1,2,3,4,5,6,7
ECU-2	133 SERVICE BAYS	12" CELDEK	16,000	0.3	FC	373	5	1,725	460/3	2	105	115/1	830	PMI/AEROCOOL	ID701	1,2,3,4,5,6,7
ECU-3	133 SERVICE BAYS	12" CELDEK	16,000	0.3	FC	373	5	1,725	460/3	2	105	115/1	830	PMI/AEROCOOL	ID701	1,2,3,4,5,6,7

NOTES:
1. UNIT SHALL BE BOTTOM DISCHARGE
2. PROVIDE SINGLE SPEED FOR 1-1/2 HP AND HIGHER.
3. PROVIDE WITH AUTOMATIC DRAIN PUMP (AUTOMATIC TIMED FLUSH SYSTEM). UIS800 MODELS REQUIRE TWO PUMPS AT 115V EACH.
4. PROVIDE REMOTE 6-POSITION SWITCH (OFF - HIGH COOL - LOW COOL - HIGH VENT - PUMP ONLY)
5. UNIT SHALL BE UL LISTED.
6. UNIT SHALL HAVE 2 RECIRCULATION PUMPS AT 115V EACH.
7. PROVIDE SINGLE POINT CONNECTION WITH MOTOR STARTER AND DISCONNECT SWITCH.

TEXAS REGISTRATION: F-000014
Alegro Engineering
Consulting Engineers
5822 Cromo Dr, Suite 105
El Paso, Texas 79912
Tel. 915.533.0700

AIR HANDLER UNIT SCHEDULE (PART 1)

TAG	SERVICE	VAV/CONSTANT VOLUME	SUPPLY FAN: AIR FLOW CONFIG.	SUPPLY FAN: FAN TYPE	SUPPLY FAN: COOLING FLOW(CFM)	SUPPLY FAN: O.A. (CFM)	SUPPLY FAN: FAN SIZE	SUPPLY FAN: E.S.P. (IN.W.G.)	SUPPLY FAN: DRIVE TYPE	SUPPLY FAN: MOTOR SIZE (HP)	SUPPLY FAN: FAN SPEED (RPM)	SUPPLY FAN: MOTOR SPEED (RPM)	SUPPLY FAN: VOLTS/ PHASE	EXHAUST FAN: FAN TYPE	EXHAUST FAN: AIR FLOW (CFM)	EXHAUST FAN: FAN SIZE	EXHAUST FAN: E.S.P. (IN.W.G.)	EXHAUST FAN: DRIVE TYPE	EXHAUST FAN: MOTOR SIZE (HP)	EXHAUST FAN: FAN SPEED (RPM)	EXHAUST FAN: MOTOR SPEED (RPM)	EXHAUST FAN: VOLTS/ PHASE	COOLING COIL: TYPE	COOLING COIL: COIL PIPE SIZE (IN)	COOLING COIL: FACE VELOCITY (FPM)	COOLING COIL: MIN. TOTAL CAPACITY (MBH)	COOLING COIL: MIN. SENSIBLE CAPACITY (MBH)	COOLING COIL: ENTERING AIR TEMP. DB/WB (DEG.F)	COOLING COIL: LVG. AIR TEMP. DB/WB (DEG.F)	COOLING COIL: MIN. ROWS	COOLING COIL: MAX. FINS PER FOOT	COOLING COIL: WATER FLOW (GPM)	COOLING COIL: ENTERING WATER TEMP. (DEG.F)	COOLING COIL: LVG. WATER TEMP. (DEG.F)	COOLING COIL: MAX. WATER PRES. LOSS (FT. W.G.)	COOLING COIL: DESIGN WATER PRES. LOSS (FT. W.G.)
AHU-1	CBIS	CONSTANT	DRAW THRU	FC	7,000	800	15	1.0	BELT	10.0	1,435	1,800	460/3	FC	7,000	18	.5	BELT	2	562	1,800	460/3	CW	5/8	450	181.8	166.4	75.8/60.2	50.3/50.2	8	8	30.3	44.0	56.0	1.7	10.0
AHU-2	CBIS	CONSTANT	DRAW THRU	FC	7,000	800	15	1.0	BELT	10.0	1,435	1,800	460/3	FC	7,000	18	.5	BELT	2	562	1,800	460/3	CW	5/8	450	181.8	166.4	75.8/60.2	50.3/50.2	8	8	30.3	44.0	56.0	1.7	10.0
AHU-3	CBRA	CONSTANT	DRAW THRU	FC	6,500	800	15	1.0	BELT	7.5	1,426	1,800	460/3	FC	6500	18	.5	BELT	1.5	554	1,800	460/3	CW	5/8	420	173.7	156.8	76.1/60.4	50.2/50.1	8	8	29.0	44.0	56.0	1.6	10.0

AIR HANDLER UNIT SCHEDULE(PART 2)

TAG	PREHEAT COIL: TYPE	COIL PIPE SIZE (IN)	MIN. TOTAL CAPACITY (MBH)	ENTERING AIR TEMP. DB (DEG.F)	LEAVING AIR TEMP. DB (DEG.F)	MIN. ROWS	MAX. FINS PER FOOT	WATER FLOW (GPM)	ENTERING WATER TEMP. (DEG.F)	LEAVING WATER TEMP. (DEG.F)	MAX. WATER PRES. LOSS (FT. W.G.)	DESIGN WATER PRES. LOSS (FT. W.G.)
AHU-1	HW	5/8"	187.6	66.1	94.8	1	8	19.4	180.0	160.0	0.6	5.0
AHU-2	HW	5/8"	187.6	66.1	94.8	1	8	19.4	180.0	160.0	0.6	5.0
AHU-3	HW	5/8"	180.5	65.6	95.3	1	8	18.7	180.0	160.0	0.6	5.0

AIR HANDLER UNIT SCHEDULE (PART 3)

TAG	SOUND DATA: SOUND POWER (Db RE:10E12 WATTS)/OCTAVE BAND FREQUENCY/ SOURCE	1 (63)	2 (125)	3 (250)	4 (500)	5 (1000)	6 (2000)	7 (4000)	8 (8000)	OPERATING WEIGHT (LBS)	FILTER TYPES	DIRTY FILTER ALLOWANCE (IN. H2O)	VARIABLE FREQUENCY DRIVE (Y/N)	UNIT COMPONENTS	MANUFACTURER	MODEL	SIZE	NOTES
AHU-1	DISCHARGE	97	91	92	85	87	84	83	79	8,200	A,B	1.00	Y	C,D,E,F,G,H,I,J,K,L	CARRIER	39MW	14	1,2,3,4,5,6,7,8,9,10,12,13,14,15,16,17
	INLET	87	82	74	67	71	68	68	60									
	CASING	89	83	76	70	72	69	59	54									
AHU-2	DISCHARGE	97	91	92	85	87	84	83	79	8,200	A,B	1.00	Y	C,D,E,F,G,H,I,J,K,L	CARRIER	39MW	14	1,2,3,4,5,6,7,8,9,10,12,13,14,15,16,17
	INLET	87	82	74	67	71	68	68	60									
	CASING	89	83	76	70	72	69	59	54									
AHU-3	DISCHARGE	97	91	91	85	87	83	82	78	8,200	A,B	1.00	Y	C,D,E,F,G,H,I,J,K,L	CARRIER	39MW	14	1,2,3,4,5,6,7,8,9,10,12,13,14,15,16,17
	INLET	87	81	74	67	70	67	66	59									
	CASING	89	82	76	70	71	68	57	53									

FILTER TYPES:
A. 2" PLEATED PREFILTERS (MERV 8)
B. 2" PLEATED FILTERS 90% EFFICIENT (MERV 13)

UNIT COMPONENTS:
C.FAN MODULE (EXHAUST FAN).
D. VFD PLENUM.
E. MIXING BOX (BOTTOM RETURN).
F. MIXING BOX (SIDE INTAKE LOCATION).
G. FILTER SECTION (PRE-FILTER & FINAL FILTER).
H. HEATING COIL MODULE WITH PLENUM.
I. COOLING COIL MODULE WITH PLENUM.
J. PRE-HEATING/HEATING COIL MODULE WITH PLENUM.
K. VFD PLENUM.
L.FAN MODULE (SUPPLY FAN).

NOTES:
1. PROVIDE UNIT WITH STEEL WALKING GRATES ON STRUCTURAL SUPPPORTS FOR SUPPLY/RETURN OPENINGS INSIDE THE AIR HANDLER, WHERE REQUIRED BY OSHA.
2. MANUFACTURER TO PROVIDE STAINLESS STEEL DRAIN PAN ON COILS. DRAIN PAN SHALL BE ASHRAE 62.1 COMPLIANT.
3. PROVIDE THERMOMETERS AND PRESSURE GAUGES AT EACH AHU COIL.
4. PROVIDE UNIT MOUNTED VFD DRIVES COMPATIBLE WITH BACNET FOR BOTH RETURN AND SUPPLY FANS; INCLUDE VFD PLENUM SECTION FOR UNIT, MOUNT VFD'S INSIDE THE UNIT AND THE OTHER SIDE TO HAVE AN ACCESS DOOR. VFD BY EMCS CONTRACTOR
5. UNITS EXCEEDING DIMENSIONS OR WEIGHT LISTED HERE MAY REQUIRE MODIFICATIONS TO THE DESIGNED CONDITIONS. CONTRACTOR IS RESPONSIBLE FOR THE COORDINATION OF SUCH MODIFICATIONS AND THE ASSOCIATED ENGINEERING AND/OR INSTALLATION COSTS.
6. PROVIDE ACCESS DOORS ON THE OPPOSITE SIDE OF COIL CONNECTIONS.
7. SOUND POWER LEVELS SHALL NOT EXCEED BY 3 dB'S OF THE LISTED OCTAVE BANDS.
8. CONTRACTOR SHALL PROVIDE 24" ROOF CURB WITH INTEGRATED PIPING CABINET AND INSULATE ROOF CURB VOIDS WITH 6" FIBERGLASS INSULATION. CONTRACTOR MUST PROVIDE ISOLATION VALVES WITHIN PIPING CABINET.
9. PROVIDE WITH DOOR SWITCHES ON BOTH SIDES OF EACH FAN SECTION. DOOR SWITCHES SHALL STOP THE FAN MOTORS WHENEVER THE DOOR OPENS.
10. PROVIDE PREMIUM EFFICIENCY FAN MOTOR.
11. PROVIDE REMOTE TEMPERATURE SENSOR IN RETURN SIDE OF DUCTWORK BY CONTROLS CONTRACTOR.
12. PROVIDE SMOKE SENSOR ON RETURN SIDE OF THE DUCTWORK (IF OPENING IS A "T" DUCT, BOTH SIDES SHALL INCLUDE A SMOKE SENSOR) BY SPECIAL SYSTEMS CONTRACTOR. SMOKE SENSOR TO BE INSTALLED IN A READILY ACCESSIBLE LOCATION.
13. CONTROLS CONTRACTOR SHALL PROVIDE AIR FLOW MONITORING STATION FOR OUTSIDE AIR IN ECONOMIZER MODULE.
14. HEATING AND COOLING COILS SHALL BE PROVIDED WITH CONTROL VALVES(2-WAY OR 3-WAY, PROVIDED BY CONTROLS CONTRACTOR), MANUAL BALANCING VALVE, UNION CONNECTION, P/T PLUGS, ISOLATION BALL OR BUTTERFLY VALVES, DRAIN VALVE WITH HOSE END CAP, AND MANUAL AIR VENT INSTALLED BELOW ROOF DECK. AT CONTRACTOR'S OPTION A PRE-PIPED CONTROL VALVE PACKAGE WITH THE ABOVE MENTIONED COMPONENTS MAY BE PROVIDED.
15. ELECTRICAL CONTRACTOR SHALL PROVIDE SEPARATE ELECTRICAL CIRCUITS FOR LIGHT & CONVENIENCE OUTLET, SUPPLY FAN, AND RETURN FAN(IF APPLICABLE).
16. AHU MANUFACTURER SHALL PROVIDE SUPPLY DAMPERS, RETURN DAMPERS, AND OUTSIDE AIR DAMPERS. MECHANICAL CONTRACTOR SHALL INSTALL DAMPERS; ACTUATORS SUPPLIED AND INSTALLED BY EMCS CONTRACTOR.
17. PROVIDE REGREASABLE BEARINGS WITH EXTENDED LUBE LINES.

VENT HOOD

TAG	TYPE	SERVICE	AIRFLOW (CFM)	MAX AIR PRESSURE LOSS (IN.W.G.)	THROAT DIMENSIONS L x W (IN.)	HOOD DIMENSIONS L x W (IN.)	HOOD WEIGHT (LBS.)	MATERIAL	MANUFACTURER	MODEL	NOTES
RH-1	RELIEF	ECU-1/MUA-1	16,000	0.10	56X56	84X75	275	GALV. METAL	GREENHECK	FGR	1,2,3
RH-2	RELIEF	ECU-2/MUA-1	16,000	0.10	56X56	84X75	275	GALV. METAL	GREENHECK	FGR	1,2,3
RH-3	RELIEF	ECU-3/MUA-1	16,000	0.10	56X56	84X75	275	GALV. METAL	GREENHECK	FGR	1,2,3

NOTES:
1. PROVIDE WITH 18" FACTORY ROOF CURB.
2. PROVIDE WITH GRAVITY BACKDRAFT DAMPER AT DUCT OPENING.
3. PROVIDE WITH INSECT SCREEN.

PACKAGED TERMINAL AIR CONDITIONER

TAG	SERVICE	SUPPLY AIR (CFM)	WEIGHT (LBS)	COOLING CAPACITY (MBH)	HEATING CAPACITY (MBH)	EER	REFRIGERANT TYPE	VOLTS/ PHASE	ELECTRICAL: COOLING AMPS	ELECTRICAL: COOLING WATTS	ELECTRICAL: HEATING AMPS	ELECTRICAL: HEATING WATTS	MANUFACTURER	MODEL #	NOTES
WU-1	GUARD SHACK	320	128	7.7	6.3	12	R-401A	208/1	2.8/3.0	640/620	2.4/2.5	540/530	FRIEDRICH	PDH07K	1,2

NOTES:
1 - PTAC TO INTERLOCK WITH REMOTE TERMOSTAT WITH OCCUPANCY SENSOR.
2 - PROVIDE ROOM FREEZE PROTECTION AND ACTIVE DEFROST.

FAN COIL UNIT SCHEDULE

TAG	SERVICE	TYPE	SUPPLY AIR FLOW (CFM)	OUTSIDE AIR FLOW (CFM)	EXT. STATIC PRESSURE (IN.W.G.)	DRIVE TYPE	FAN SPEED (RPM)	MOTOR SIZE (HP)	MCA (A)	MOCP (A)	VOLTS/ PHASE	COOLING COIL: TYPE	COOLING COIL: MIN. SENSIBLE CAPACITY(MBH)	COOLING COIL: MIN. TOTAL CAPACITY(MBH)	COOLING COIL: ENT. AIR TEMP. DB/WB(DEG.F)	COOLING COIL: LVG. AIR TEMP. DB/WB(DEG.F)	COOLING COIL: MIN. ROWS	COOLING COIL: MAX. FINS PER INCH	COOLING COIL: WATER FLOW (GPM)	COOLING COIL: ENT. WATER TEMP.(DEG.F)	COOLING COIL: LEAVING WATER TEMP. (DEG.)	COOLING COIL: MAX. WATER PRES. LOSS(FT.W.G.)
BC-1	EMPLOYEE LOUNGE/LOCKER/SECURITY	4-PIPE	800	180	0.35	BELT	1036	1/4	5.8	15	120/1	CW	22.8	24.6	79.8/61.8	49.5/48.8	6	12	4.1	44	56	3.18
BC-2	123 BHS/CONTROL ROOM	4-PIPE	1,300	60	0.35	BELT	1014	1/2	9.6	15	120/1	CW	25.0	26.2	73.5/59.9	53.1/51.4	4	12	4.3	44	56	2.9
BC-3	122 ON-SCREEN RESOLUTION AREA	4-PIPE	1,300	60	0.35	BELT	1014	1/2	9.6	15	120/1	CW	25.0	26.2	73.5/59.9	53.1/51.4	4	12	4.3	44	56	2.9
BC-4	NEW DELTA AIRLINES	4-PIPE	1,210	200	0.35	BELT	886	1/2	1.1	15	120/1	CW	27.8	29.2	77.1/60.9	52.7/50.8	4	12	4.8	44	56	3.44
BC-5	UNITED AIRLINES	4-PIPE	1,050	130	0.35	BELT	1196	3/4	1.7	15	460/3	CW	23.7	24.9	76.4/60.7	52.5/50.7	4	12	4.1	44	56	2.68
BC-6	TSA NEW SPACE	4-PIPE	1350	220	0.35	BELT	1063	3/4	1.7	15	460/3	CW	31.7	33.2	77.9/61.2	53.0/50.9	4	12	5.5	44	56	4.2

NOTES:
1. PROVIDE COIL CONNECTIONS ON SAME SIDE OF UNIT.
2. CONTROLS CONTRACTOR TO PROVIDE TWO WAY MODULATING 24V ELECTRIC ACTUATOR WITH 0-10 VDC CONTROL SIGNAL (NO 3-POINT FLOATING OR ON/OFF CONTROL VALVES ALLOWED). CONTRACTORS SHALL PROVIDE VALVE ASSEMBLY PACKAGE WITH MANUAL SHUT OFF BALL VALVES, BALANCING VALVE, STRAINER AND AUTOMATIC AIR VENTS.
3. PROVIDE THERMOSTAT AS SHOWN IN CONTROLS.
4. PROVIDE 1" STANDARD INSULATED CABINET.
5. PROVIDE VIBRATION ISOLATORS WHEN HANGING UNIT.
6. PROVIDE ACCESS TO RETURN FILTER.
7. COIL CONNECTIONS TO BE COORDINATED WITH DRAWINGS.
9. PROVIDE UNIT WITH 2" MERV 8 PLEATED FILTERS.
10. PROVIDE SECONDARY DRAIN PAN.

INFRARED HEATER SCHEDULE

TAG	SERVICE	TYPE	APPROX OPERATING WEIGHT (LBS)	ELECTRICAL: VOLTS	ELECTRICAL: PHASE	ELECTRICAL: CYCLE	HEATING CAPACITY: TYPE	HEATING CAPACITY: INPUT (MBH)	MANUFACTURER	MODEL	NOTES
IRH-1	AS SHOWN ON DRAWINGS	STRAIGHT TUBE	50	120	1	60	GAS	50.0	MODINE	IPT50	1,2,3,4,5

NOTES:
1. PROVIDE SINGLE STAGE GAS CONTROL WITH DIRECT SPARK IGNITION WITH 100% SAFTEY SHUTOFF AT 115V/24V.
2. CONTRACTOR TO MOUNT HEATER AT 12' 0" ABOVE FINISHED FLOOR.
3. PROVIDE UNIT HEATER WITH 20' STRAIGHT TUBE AT 0° ANGLE.
4. CONTRACTOR TO MAINTAIN RECOMMEND CLEARANCES.
5. INSTALL AS PER MAUFACTURER'S RECOMMENDATIONS.

FAN COIL UNIT SCHEDULE (CONT.)

TYPE	HEATING COIL: MIN. TOTAL CAPACITY(MBH)	ENT. AIR TEMP. DB (DEG.F)	LVG. AIR TEMP. DB (DEG.F)	MIN. ROWS	MAX. FINS PER INCH	WATER FLOW (GPM)	ENT. WATER TEMP.(DEG.F)	LEAVING WATER TEMP. (DEG.F)	MAX. WATER PRES. LOSS(FT.W.G.)	APPROX OPERATING WEIGHT(LBS)	MANUFACTURER	MODEL	NOTES
HW	30.5	59.7	99.8	1	12	3.1	180	160	9.04	240	CARRIER	42BHE08	1,2,3,4,5,6,7,8,9,10
HW	43.7	69.6	104.7	1	12	4.4	180	160	19.96	240	CARRIER	42BHE12	1,2,3,4,5,6,7,8,9,10
HW	43.7	69.6	104.7	1	12	4.4	180	160	19.96	240	CARRIER	42BHE12	1,2,3,4,5,6,7,8,9,10
HW	44.1	64	102.3	1	12	4.5	180	160	20.32	240	CARRIER	42BHE12	1,2,3,4,5,6,7,8,9,10
HW	40.0	65.1	105.1	1	12	4.1	180	160	17.41	240	CARRIER	42BHE10	1,2,3,4,5,6,7,8,9,10
HW	79.6	62.8	124.8	1	12	8.1	180	160	17.27	240	CARRIER	42BHE12	1,2,3,4,5,6,7,8,9,10

CEILING FAN SCHEDULE

TAG	SERVICE	AIRFOILS	SIZE	ELECTRICAL: HP	ELECTRICAL: MCA	ELECTRICAL: MOCP	ELECTRICAL: VOLT/PHASE	MATERIAL	MANUFACTURER	MODEL	WEIGHT LBS	NOTES
CF-1	BAGGAGE MAKE-UP	8	12' DIAM.	1	3.2	10	208/3	ALUMINUM	BIG ASS FANS	PF8-12	183	1,2,3
CF-2	BAGGAGE MAKE-UP	8	12' DIAM.	1	3.2	10	208/3	ALUMINUM	BIG ASS FANS	PF8-12	183	1,2,3
CF-3	BAGGAGE MAKE-UP	8	12' DIAM.	1	3.2	10	208/3	ALUMINUM	BIG ASS FANS	PF8-12	183	1,2,3
CF-4	TEMPORARY BAGGAGE INSPECTION	3	52" DIAM.	-	-	-	120/1	WHITE	BIG ASS FANS	HAIKU-L-3127	15	1,2,4,5
CF-5	TEMPORARY BAGGAGE INSPECTION	3	52" DIAM.	-	-	-	120/1	WHITE	BIG ASS FANS	HAIKU-L3127	15	1,2,4,5

NOTES:
1. PROVIDE WALL CONTROL WITH UNIT.
2. INSTALL AS PER MANUFACTURER'S RECOMMENDATIONS.
3. COLOR TO BE DETERMINED BY ARCHITECT.
4. PROVIDE WITH WALL CONTROLLER.
5. COORDINATE WITH OWNER FOR OPTIONAL EXTENDED FAN HEIGHTS.

REFERENCES -- BENCHMARK

DATE	REVISIONS	BY

CONSULTANT'S NAME

mijares ● mora
ARCHITECTS INC.
D. PASO, TEXAS 79912
111 N. FESTIVAL
TEL: 915-542-1991
FAX: 542-1994

ARCHITECT'S SEAL

STATE OF TEXAS
ROLANDO LEGARRETA
84714
LICENSED
PROFESSIONAL ENGINEER
5/24/17

ALTERATION OF A SEALED DOCUMENT WITHOUT PROPER AUTHORIZATION BY THE PROFESSIONAL ENGINEER IS AN OFFENSE, UNDER THE TEXAS ENGINEERING PRACTICE ACT.

SCALE

DATE	MAY 2016
DESIGN BY	AEGRO
DRAWN BY	GAG
CHKD. BY	GAG
APPD. BY	RL
JOB NO.	14-154

PROJECT NAME

EL PASO INTERNATIONAL AIRPORT
CHECKED BAGGAGE INSPECTION SYSTEM
6701 CONVAIR RD. EL PASO, TEXAS

CITY OF EL PASO

SHEET TITLE
MECHANICAL SCHEDULES

M0.01

FILE NO. XXXX

SHEET 2 OF 34

CONDENSING UNIT SCHEDULE - MINI-SPLIT

TAG	SERVICE	TYPE	MAX CAPACITY (MBH)	MIN. CAPACITY (MBH)	REFRIG. TYPE	MIN. SEER	VOLTS/ PHASE	MCA (AMPS)	MOCP (AMPS)	AIR COOLED CONDENSER AMB. TEMP. (DEG.F)	AIR COOLED CONDENSER MIN. OPERATING TEMP.(DEG.F)	AIR COOLED CONDENSER NO. OF FANS	OPERATING WEIGHT(LBS.)	MANUFACTURER	MODEL	NOTES
CU-1	FC-1	AIR-COOLED	34.2	12.0	R-410A	14.0	208/1	25.0	30	115	0	1	170	MITSUBISHI	PUY-A36NHA3	1,2,3,4,5,6,7
CU-2	FC-2	AIR-COOLED	30.0	12.0	R-410A	15.5	208/1	25.0	30	115	0	1	170	MITSUBISHI	PUY-A30NHA3	1,2,3,4,5,6,7
CU-3	FC-3	AIR-COOLED	30.0	12.0	R-410A	15.5	208/1	25.0	30	115	0	1	170	MITSUBISHI	PUY-A30NHA3	1,2,3,4,5,6,7
CU-4	FC-4	AIR-COOLED	24.0	12.0	R-410A	17.0	208/1	18.0	25	115	0	1	170	MITSUBISHI	PUY-A24NHA3	1,2,3,4,5,6,7
CU-5	FC-5	AIR-COOLED	24.0	12.0	R-410A	17.0	208/1	18.0	25	115	0	1	170	MITSUBISHI	PUY-A24NHA3	1,2,3,4,5,6,7
CU-6	FC-6	AIR-COOLED	34.2	12.0	R-410A	14.0	208/1	25.0	30	115	0	1	170	MITSUBISHI	PUY-A36NHA3	1,2,3,4,5,6,7
CU-7	FC-7	AIR-COOLED	34.2	12.0	R-410A	14.0	208/1	25.0	30	115	0	1	170	MITSUBISHI	PUY-A36NHA3	1,2,3,4,5,6,7
CU-8	FC-8	AIR-COOLED	141.4	103.5	R-410A	11.0	460/3	27.1	45	115	0	2	450	CARRIER	38AUZA14	1,2,3,4,5,6,8,9

NOTES:
1. ACTUAL COOLING CAPACITY OF UNIT SHALL BE SUITABLE FOR MATCHING FAN COIL UNIT PERFORMANCE SCHEDULED. ASSUME 2 DEG.F SUCTION LINE LOSS.
2. IN ADDITION TO THE STANDARD FEATURES AND CONTROLS OF THE REFERENCED UNIT, PROVIDE THE FOLLOWING ACCESSORIES:
   - SOLID STATE CONTROL TO PREVENT RAPID CYCLING OF THE COMPRESSOR.
   - BIFLOW LIQUID LINE FILTER/DRYER.
3. PROVIDE WITH EXTERNAL SERVICE VALVES WITH SERVICE PORT.
4. RS & RL LINES MUST BE INSULATED.
5. RS & RL LINES TO BE SIZED A PER MANUFACTURER'S RECOMMENDATION.
6. PROVIDE AND INSTALL SIGHT GLASS ON RS REFRIGERANT LINE.
7. PROVIDE WITH NEOPREAN VIBRATION ISOLATORS.
8. PROVIDE WITH NON-PENETRATIVE SUPPORT FRAMES WITH ADJUSTABLE LEG ASSEMBLIES.
9. PROVIDE WITH NON-FUSED DISCONNECT.

FAN SCHEDULE

TAG	SERVICE	TYPE	WHEEL DIAMETER (IN.)	AIR FLOW (CFM)	TOTAL STATIC PRESSURE (IN.W.G.)	OUTLET VELOCITY (FPM)	SOUND POWER BY OCTAVE BAND INLET/RADIATED 63	125	250	500	1,000	2,000	4,000	8,000	DRIVE TYPE	FAN SPEED (RPM)	MOTOR SIZE (HP)	MOTOR SPEED (RPM)	VOLTS/ PHASE	APPROX. OPERATING WEIGHT(LB.)	MANUFACTURER	MODEL	NOTES
EF-1	BAGGAE MAKE-UP	BI	30.5	5,600	0.35	1,018	74	75	71	66	64	58	52	46	BELT	472	3/4	1,725	208/3	300	GREENHECK	CUBE-300-VGD	1,2,3,4,5,6,7
EF-2	BAGGAE MAKE-UP	BI	30.5	5,600	0.35	1,018	74	75	71	66	64	58	52	46.0	BELT	472	3/4	1,725	208/3	300	GREENHECK	CUBE-300-VGD	1,2,3,4,5,6,7

NOTES:
1. PROVIDE WITH ALUMINUM HOUSING, ALUMINUM WHEEL, AND CURB CAP WITH PREPUNCHED MOUNTING HOLES.
2. PROVIDE WITH NEMA-1 FUSED DISCONNECT SWITCH.
3. PROVIDE WITH VARI-GREEN DRIVE AND VOC-VARI-GREEN INDOOR AIR QUALITY CONTROL.
4. FAN SHALL BE HIGH WIND RATED (+/- 150 PSF RATING).
5. PROVIDE WITH RE-GREASBLE BEARING, EXTENED LUBE LINES, AND GALVANIZED BIRDSCREEN.
6. PROVIDE WITH AUTOMATIC BELT TENSIONER, GRIP NOTCH BELT(S), AND 1 SPARE BELT.
7. PROVIDE WITH 18" ROOF CURB AND GRAVITY OPERATED BACKDRAFT DAMPER.

FAN COIL UNIT SCHEDULE - MINI-SPLIT

TAG	SERVICE	TYPE	MATCHING CONDENSING UNIT	SUPPLY AIR FLOW (CFM)	MOTOR DRIVE	MCA	MOCP	VOLT/PHASE (V)	COOLING COIL TYPE	COOLING COIL MAX TOTAL CAPACITY(MBH)	COOLING COIL MIN. TOTAL CAPACITY(MBH)	COOLING COIL REFRIGERANT TYPE	APPROX. OPERATING WEIGHT(LBS)	MANUFACTURER	MODEL	NOTES
FC-1	123G TELECOMM/I.T. ROOM	DX	CU-1	810	DIRECT	1	15	208/1	AIR-COOLED	34.2	12.0	R-410A	50	MITSUBISHI	PKA-A36KA	1,2,3,4,5
FC-2	123A PROGRAMMABLE LOGIC CONTROL	DX	CU-2	705	DIRECT	1	15	208/1	AIR-COOLED	30.0	12.0	R-410A	50	MITSUBISHI	PKA-A30KA	1,2,3,4,5
FC-3	122A EQUIPMENT RACKS	DX	CU-3	705	DIRECT	1	15	208/1	AIR-COOLED	30.0	12.0	R-410A	50	MITSUBISHI	PKA-A30KA	1,2,3,4,5
FC-4	IT ROOM 1	DX	CU-4	705	DIRECT	1	15	208/1	AIR-COOLED	24.0	12.0	R-410A	50	MITSUBISHI	PKA-A24KA	1,2,3,4,5
FC-5	115 IT ROOM	DX	CU-5	705	DIRECT	1	15	208/1	AIR-COOLED	24.0	12.0	R-410A	50	MITSUBISHI	PKA-A24KA	1,2,3,4,5
FC-6	TELECOMM/I.T. ROOM 1	DX	CU-6	810	DIRECT	1	15	208/1	AIR-COOLED	34.2	12.0	R-410A	50	MITSUBISHI	PKA-A36KA	1,2,3,4,5
FC-7	119 TELECOMM/I.T. ROOM	DX	CU-7	810	DIRECT	1	15	208/1	AIR-COOLED	34.2	12.0	R-410A	50	MITSUBISHI	PKA-A36KA	1,2,3,4,5
FC-8	TEMPORARY BAGGAGE INSPECTION	DX	CU-8	6250	DIRECT	3.3	15	460/3	AIR-COOLED	141.4	103.5	R-410A	700	CARRIER	40RUAA14	3,4,5,6,7,8,9

NOTES:
1. PROVIDE FAN SWITCH WITH OFF - LOW - MED - HIGH SETTINGS.
2. PROVIDE BOTTOM ACCESS RETURN FILTER GRILLE.
3. PROVIDE WITH REMOTE CONTROLLER AND REMOTE TEMPERATURE SENSOR.
4. INSTALL AS PER MANUFACTURER'S RECOMMENDATIONS.
5. PROVIDE WITH CONDENSATE PUMP.
6. PROVIDE WITH FACTORY SUPPLIED FLOOR MOUNT BASE (SUBBASE).
7. PROVIDE WITH FACTORY SUPPLIED DISCHARGE PLENUM.
8. PROVIDE WITH FACTORY SUPPLIED RETURN AIR GRILLE.
9. PROVIDE WITH CONDESATE OVERFLOW SWITCH ASSEMBY.

MAKE-UP AIR UNIT SCHEDULE

TAG	SERVICE	FAN TYPE	FAN SUPPLY AIRFLOW (CFM)	FAN E.S.P. (IN.W.G.)	FAN DRIVE TYPE	FAN SPEED (RPM)	FAN MOTOR SIZE (HP)	FAN MOTOR SPEED (RPM)	FAN MCA (A)	FAN MOCP (A)	FAN VOLTS/ PHASE	HEATING TYPE	HEATING MIN. TOTAL CAPACITY (MBH)	HEATING ENTERING AIR TEMP. DB/WB (F)	HEATING LEAVING AIR TEMP. DB/WB (F)	HEATING ENTERING WATER TEMP. (DEG. F)	HEATING LEAVING WATER TEMP. (DEG. F)	HEATING WATER FLOW (GPM)	HEATING WATER PRESSURE DROP (FT OF HEAD)	UNIT WEIGHT (LB)	MANUFACTURER	MODEL	NOTES
MUA-1	BAGGAGE MAKE-UP	FC	15,000	0.75	BELT	673	10	1725	17.7	30	460/3	HW	1,058.4	20	95.3	180	160	109	5.4	1,900	GREENHECK	MSX-122-H35	1,2,3,4,5,6,7,8,9,10,11,12,13,14,15,16

NOTES
1. PROVIDE UNIT WITH OA/RA DAMPERS AND MERV 13 FILTERS.
2. PROVIDE UNIT WITH WEATHER HOOD: ALUMINUM MESH 20"X25"X2"(9).
3. PROVIDE UNIT WITH DOUBLE WALL INSULATION ON ENTIRE UNIT.
4. PROVIDE UNIT WITH OUTDOOR INTAKE AT THE END OF UNIT.
5. PROVIDE UNIT WITH 24" ROOF CURB WITH 1" INSULATION.
6. PROVIDE UNIT WITH SUPPLY AIR DISCHARGE AT BOTTOM OF UNIT.
7. PROVIDE WITH HINGED ACCESS AT RIGHT HAND SIDE.
8. PROVIDE UNIT WITH GALVANIZED COATING.
9. MANUFACTURER SHALL PROVIDE SERVICE RECEPTACLE; 115V, GFCI, NEMA 3R.
10. PROVIDE AND INSTALL SMOKE DETECTOR.
11. MANUFACTURER PROVIDE UNIT WITH SUPPLY DAMPER; ACTUATORS BY EMCS CONTRACTOR.
12. MANUFACTURER SHALL PROVIDE UNIT WITH DIRTY FILTER SWITCH.
13. PROVIDE UNIT WITH SPRING ISOLATION.
14. PROVIDE 1 NO.1 ON SUPPLY STARTER.
15. PROVIDE UNIT WITH EMCS INTERFACE (MONITORING AND CONTROL) AND BACNET PROTOCOL CARD.
16. HEATING COILS SHALL BE PROVIDED WITH 3-WAY CONTROL BALL VALVE, UNION CONNECTION, ISOLATION BALL VALVES, DRAIN VALVE WITH HOSE END CAP, AND MANUAL AIR VENT. P/T PLUGS, MANUAL BALANCING VALVE, ACTUATORS AND CONTROL VALVES TO BE SUPPLIED BY EMCS CONTRACTOR. AT CONTRACTOR'S OPTION A PRE-PIPED CONTROL VALVE PACKAGE WITH THE ABOVE MENTIONED COMPONENTS MAY BE PROVIDED.

PLUMBING FIXTURE CONNECTION SCHEDULE

MARK	FIXTURE	CW*	HW*	W*	V*	REMARKS
S-1	SINK - TWO COMPARTMENT FAUCET	1/2"	1/2"	2"	1-1/4"	ELKAY MODEL # LRAD3321; STAINLESS STEEL DOUBLE BOWL TOP MOUNT SINK. OVERALL DIMENSIONS ARE 33" X 21-1/4" X 4". SINK IS MANUFACTURED FROM 18 GAUGE 304 STAINLESS STEEL WITH A LUSTROUS HIGHLIGHTED SATIN FINISH, REAR CENTER DRAIN PLACEMENT AND FULL SPRAY SIDES AND BOTTOM. ZURN MODEL # Z871J4-XL-16F; POLISHED CHROME-PLATED 8" [203MM] BRASS DECK FAUCET WITH QUARTER TURN CERAMIC DISC CARTRIDGES AND A 9-1/2" [241MM] TUBULAR BRASS SWING SPOUT UNIT IS FURNISHED WITH A 1.0 GPM VANDAL RESISTANT PRESSURE COMPENSATING AERATOR, 4" VANDAL RESISTANT COLOR CODED METAL WRIST BLADE HANDLES, MOUNTING HARDWARE AND 1/2" NPSM COUPLING NUTS FOR STANDARD LAVATORY RISERS. PROVIDE OFFSET WHEELCHAIR GRID DRAIN; 1-1/4" CAST BRASS P-TRAP WITH CLEANOUT; XL LEAD FREE HEAVY-DUTY LOOSE KEY STOP AND LAVATORY SUPPLY KIT (CONNECTIONS 1/2" IPS X 3/8" OD) WITH BRAIDED STAINLESS STEEL SUPPLIES; ADA COMBINATION OFFSET TRAP AND SUPPLY WRAP PROTECTOR KIT.
DF-1	DRINKING FOUNTAIN - ELECTRIC COOLED BI LEVEL WITH BOTTLE FILLER	1/2"	--	2	1-1/4"	ELKAY MODEL # EZSTL8WSLK; ELETRIC DRINKING FOUNTAIN WITH BOTTLE FILLING STATION AND BOTTLE COUNTER. UNIT SHALL DELIVER 8 GPH OF 50°F DRINKING WATER AT 90°F AMBIENT AND 80°F INLET WATER COOLER UNITS SHALL HAVE PUSHBAR ACTIVATION. BOTTLE FILLING UNIT SHALL INCLUDE AN ELECTRONIC SENSOR FOR TOUCHLESS ACTIVATION WITH AUTO 20-SECOND SHUT-OFF TIMER. SHALL INCLUDE DISPLAYING COUNT OF PLASTIC BOTTLES SAVED FROM WASTE. BOTTLE FILLER SHALL PROVIDE 1.1-1.5 GPM FLOW RATE WITH LAMINAR FLOW TO MINIMIZE SPLASHING. SHALL INCLUDE INTEGRATED SILVER ION ANTI-MICROBIAL PROTECTION IN KEY AREAS UNIT SHALL MEET ADA GUIDELINES. UNIT SHALL BE LEAD-FREE DESIGN WHICH IS CERTIFIED TO NSF/ANSI 61 AND 372 AND MEETS FEDERAL AND STATE LOW-LEAD REQUIREMENTS. UNIT SHALL BE CERTIFIED TO UL399 AND CAN/CSA 22.2 NO. 120. PROVIDE MANUFACTURER RECOMMENDED CARRIER, AND XL LEAD FREE HEAVY-DUTY LOOSE KEY STOP AND LAVATORY SUPPLY KIT (CONNECTIONS 1/2" IPS X 3/8" OD) WITH BRAIDED STAINLESS STEEL SUPPLIES.
GT-1	GREASE TRAP	--	--	4	--	SCHIER MODEL # GB-250; 100 GPM WITH 1,000 LBS GREASE CAPACITY WITH INTEGRATED/BUILT IN FLOW CONTROL, PROVIDE WITH H-20 TRAFFICE RATED PICKABLE COVER AND EXTENSION RING AS REQUIRED. UNIT IS CERTIFIED TO ASME A112.14.3 AND CSA B481.1 PROVIDE AND INSTALL WITH SEWER VIEWER SAMPLING PORT SV24-L4 WITH H-20 TRAFFIC RATED PICKABLE COVER AND EXTENSION RINGS AS REQUIRED.
RPBP-1	REDUCED PRESSURE BACKFLOW PREVENTER	1/2"	--	--	--	WILKINS # 375; REDUCED PRESSURE PRINCIPAL BACKFLOW PREVENTER, PRESSURE DIFFERENTIAL RELIEF VALVE, SPRING LOADED CENTER GUIDE CHECK VALVES, "Y" PATTERN BODY, FOUR RESILIENT BALL VALVE TEST PORTS.
FCO	FLOOR CLEANOUT	--	--	**	--	ZURN Z-1402; SIZE SAME AS PIPE UP TO 4"
DCO	DOUBLE CLEANOUT	--	--	**	--	ZURN Z-1402; SIZE SAME AS PIPE UP TO 4"
GCO	GROUND CLEANOUT	--	--	4"	--	ZURN Z-1402; SIZE SAME AS PIPE UP TO 4"
WCO	WALL CLEANOUT	--	--	2"	--	ZURN Z-1446 OR APPROVED EQUAL WITH ROUND WALL ACCESS STAINLESS STEEL COVER.

* - SIZES SHOWN ARE FOR ROUGH-IN PURPOSES ONLY
** - SIZES INDICATED ON DRAWINGS

TEXAS REGISTRATION: F-000014
Alegro Engineering
Consulting Engineers
5822 Cromo Dr. Suite 105
El Paso, Texas 79912
Tel. 915.533.0700

REFERENCES -- BENCHMARK

DATE	REVISIONS	BY

ALTERATION OF A SEALED DOCUMENT WITHOUT PROPER NOTIFICATION TO THE RESPONSIBLE ENGINEER IS AN OFFENSE UNDER THE TEXAS ENGINEERING PRACTICE ACT.

CONSULTANT'S NAME
mijares mora ARCHITECTS INC.
111 N. FESTIVAL TEL: 915-542-1591
EL PASO, TEXAS 79912 FAX: 542-1594

ARCHITECT'S SEAL
STATE OF TEXAS ROLANDO LEGARRETA 84714 LICENSED PROFESSIONAL ENGINEER 5/26/16

SCALE
DATE MAY 2016
DESIGN BY ALEGRO
DRAWN BY GAG
CHKD. BY GAG
APPD. BY RL
JOB NO. 14-154

PROJECT NAME
EL PASO INTERNATIONAL AIRPORT CHECKED BAGGAGE INSPECTION SYSTEM
6701 CONVAIR RD. EL PASO, TEXAS

EL PASO INTERNATIONAL AIRPORT

CITY OF EL PASO

SHEET TITLE
MECHANICAL SCHEDULES

M0.02

FILE NO. XXXX
SHEET 3 OF 34

EQUIPMENT TAG: EXISTING TU-10-1

OUTSIDE AIR CALCULATIONS USING ASHRAE 62-2007 FOR MULTIPLE ZONE SYSTEMS

ROOM NUMBER/NAME	OCCUPANCY CATEGORY (TABLE 6-1)	NUMBER OF PEOPLE P(z)	ZONE FLOOR AREA (S.F.) A(z)	PEOPLE OUTDOOR RATE (CFM/PERS) (TABLE 6-1) R(p)	AREA OUTDOOR RATE (CFM/S.F.) (TABLE 6-1) R(a)	R(p)P(z)	R(a)A(z)	BREATHING ZONE OUTDOOR AIRFLOW (CFM) V(bz) = R(p)P(z) + R(a)A(z)	ZONE DISTRIBUTION EFFECTIVENESS E(z) (TABLE 6-2)	COOLING ZONE OUTDOOR AIR RATE V(oz) = V(bz)/E(z) (CFM)	COOLING Qs	COOLING dT	CALCULATED COOLING AIRFLOW (CFM)	DESIGN COOLING PRIMARY AIRFLOW V(p) (CFM)	COOLING ZONE OUTDOOR RATIO Z(p) = V(oz)/V(pz)
Employee Lounge 1	BREAK ROOM	4	145	5	0.06	20	8.7	28.7	0.8	35.875	4700	19	266	270	0.13
Office 01	OFFICE	1	105	5	0.06	5	6.3	11.3	0.8	14.125	1900	19	108	120	0.12
Office 02	OFFICE	1	100	5	0.06	5	6	11	0.8	13.75	1900	19	108	120	0.11
Office 03	OFFICE	1	100	5	0.06	5	6	11	0.8	13.75	1900	19	108	120	0.11
Office 04	OFFICE	1	130	5	0.06	5	7.8	12.8	0.8	16	2100	19	119	120	0.13
TOTALS		8				40	34.8	74.8					707.41	750	0.13
														Max Z(p)	0.13

COOLING MAXIMUM OUTDOOR RATIO (Max Z(p))	System Ventilation Efficiency 0.15<Z(p)<0.55	E(v)
0.13	1	0.9

If Z(p) Exceeds 0.55; Use Appendix A of the Standard
If Z(p) is 0.15 or less System Ventilation Efficiency is 1.0.
System Population [P(s)] 8
Occupant Diversity (Equation 6-7) 1 D = P(s)/Sum all zones (P(z)

	T DB	T wb	RH %	CFM	FRACTION
Return air (Cooling)	72.0	59.4	49.82	650	0.87
Supply air (Cooling)	53.0	52.0	94.10	750	
Supply air (Heating)	90.0			750	
Outside Air (Heating)	20.0			100	0.13
Outside air (Cooling)	105.0	69.0	17.06	100	0.13
O.A. (De-humidification)	80	79	95.89	100	0.13
Altitude	4000	FT			

V(ou) = Uncorrected Outdoor Air Intake 74.8 Equation 6-6 V(ou) = D (Sum all zones R(p)P(z)) + Sum all zones R(a)A(z)

Corrected Outdoor Air Rate V(ot)
COOLING V(ot) = Outdoor Air Intake Fraction 83 Equation 6-8 V(ot) = V(ou)/E(v)

GENERAL EXHAUST AIRFLOW 0
MAKE UP AIR FOR EXHAUST REQUIRED 0
COOLING VENTILATION RATE 100

COOLING COIL CALCULATIONS			HEATING CALCULATIONS (INPUT)	
SUMMER MIXED AIR TEMP. (DB/WB)	76.4 F (DB)	61.0 F (WB)	WINTER MIXED AIR TEMP. (DB)	65.1 F (DB)
COOLING SUPPLY AIR TEMP. (DB/WB)	53.0 F (DB)	52.0 F (WB)	HEATING SUPPLY AIR TEMP. (DB)	90.0 F (DB)
ENTHALPY OF MIXED AIR (COOLING)	29.0 Btu/Lb Dry Air (From Psych. Chart)		qs (coil) =	17,391 Btuh
ENTHALPY OF SUPPLY AIR (COOLING)	22.8 Btu/Lb Dry Air (From Psych. Chart)		AIRFLOW	750 CFM
qs (coil) =	16322 Btuh			
q Tot (coil)=	18358 Btuh			
AIRFLOW	750 CFM			
CONDENSATE	0.00 GPM			

Single Zone Systems
V(ot) = Outdoor Air Intake flow
V(ot) = V(oz)

100% Outdoor Air Systems
V(ot) = Sum all zones V(oz)

EQUIPMENT TAG: EXISTING TU-10-2

OUTSIDE AIR CALCULATIONS USING ASHRAE 62-2007 FOR MULTIPLE ZONE SYSTEMS

ROOM NUMBER/NAME	OCCUPANCY CATEGORY (TABLE 6-1)	NUMBER OF PEOPLE P(z)	ZONE FLOOR AREA (S.F.) A(z)	PEOPLE OUTDOOR RATE (CFM/PERS) (TABLE 6-1) R(p)	AREA OUTDOOR RATE (CFM/S.F.) (TABLE 6-1) R(a)	R(p)P(z)	R(a)A(z)	BREATHING ZONE OUTDOOR AIRFLOW (CFM) V(bz) = R(p)P(z) + R(a)A(z)	ZONE DISTRIBUTION EFFECTIVENESS E(z) (TABLE 6-2)	COOLING ZONE OUTDOOR AIR RATE V(oz) = V(bz)/E(z) (CFM)	COOLING Qs	COOLING dT	CALCULATED COOLING AIRFLOW (CFM)	DESIGN COOLING PRIMARY AIRFLOW V(p) (CFM)	COOLING ZONE OUTDOOR RATIO Z(p) = V(oz)/V(pz)
Office 05	OFFICE	1	155	5	0.06	5	9.3	14.3	0.8	17.875	2300	19	130	130	0.14
Office 06	OFFICE	1	125	5	0.06	5	7.5	12.5	0.8	15.625	2100	19	119	120	0.13
Corridor 2	CORRIDOR	0	295	0	0.06	0	17.7	17.7	0.8	22.125	1600	19	91	100	0.22
123C Available Space	OFFICE	1	150	5	0.06	5	9	14	0.8	17.5	2300	19	130	130	0.13
123D Available Space	OFFICE	1	115	5	0.06	5	6.9	11.9	0.8	14.875	2000	19	113	120	0.12
123E Available Space	OFFICE	1	115	5	0.06	5	6.9	11.9	0.8	14.875	2000	19	113	120	0.12
TOTALS		5				25	57.3	82.3					696.10	720	0.22
														Max Z(p)	0.22

COOLING MAXIMUM OUTDOOR RATIO (Max Z(p))	System Ventilation Efficiency 0.15<Z(p)<0.55	E(v)
0.22	0.92875	0.9

If Z(p) Exceeds 0.55; Use Appendix A of the Standard
If Z(p) is 0.15 or less System Ventilation Efficiency is 1.0.
System Population [P(s)] 5
Occupant Diversity (Equation 6-7) 1 D = P(s)/Sum all zones (P(z)

	T DB	T wb	RH %	CFM	FRACTION
Return air (Cooling)	72.0	59.4	49.82	620	0.86
Supply air (Cooling)	53.0	52.0	94.10	720	
Supply air (Heating)	90.0			720	
Outside Air (Heating)	20.0			100	0.14
Outside air (Cooling)	105.0	69.0	17.06	100	0.14
O.A. (De-humidification)	80	79	95.89	100	0.14
Altitude	4000	FT			

V(ou) = Uncorrected Outdoor Air Intake 82.3 Equation 6-6 V(ou) = D (Sum all zones R(p)P(z)) + Sum all zones R(a)A(z)

Corrected Outdoor Air Rate V(ot)
COOLING V(ot) = Outdoor Air Intake Fraction 91 Equation 6-8 V(ot) = V(ou)/E(v)

GENERAL EXHAUST AIRFLOW 0
MAKE UP AIR FOR EXHAUST REQUIRED 0
COOLING VENTILATION RATE 100

COOLING COIL CALCULATIONS			HEATING CALCULATIONS (INPUT)	
SUMMER MIXED AIR TEMP. (DB/WB)	76.6 F (DB)	61.0 F (WB)	WINTER MIXED AIR TEMP. (DB)	64.8 F (DB)
COOLING SUPPLY AIR TEMP. (DB/WB)	53.0 F (DB)	52.0 F (WB)	HEATING SUPPLY AIR TEMP. (DB)	90.0 F (DB)
ENTHALPY OF MIXED AIR (COOLING)	29.0 Btu/Lb Dry Air (From Psych. Chart)		qs (coil) =	16,889 Btuh
ENTHALPY OF SUPPLY AIR (COOLING)	22.8 Btu/Lb Dry Air (From Psych. Chart)		AIRFLOW	720 CFM
qs (coil) =	15791 Btuh			
q Tot (coil)=	17620 Btuh			
AIRFLOW	720 CFM			
CONDENSATE	0.00 GPM			

Single Zone Systems
V(ot) = Outdoor Air Intake flow
V(ot) = V(oz)

100% Outdoor Air Systems
V(ot) = Sum all zones V(oz)

EQUIPMENT TAG: EXITING TU-10-3

OUTSIDE AIR CALCULATIONS USING ASHRAE 62-2007 FOR MULTIPLE ZONE SYSTEMS

ROOM NUMBER/NAME	OCCUPANCY CATEGORY (TABLE 6-1)	NUMBER OF PEOPLE P(z)	ZONE FLOOR AREA (S.F.) A(z)	PEOPLE OUTDOOR RATE (CFM/PERS) (TABLE 6-1) R(p)	AREA OUTDOOR RATE (CFM/S.F.) (TABLE 6-1) R(a)	R(p)P(z)	R(a)A(z)	BREATHING ZONE OUTDOOR AIRFLOW (CFM) V(bz) = R(p)P(z) + R(a)A(z)	ZONE DISTRIBUTION EFFECTIVENESS E(z) (TABLE 6-2)	COOLING ZONE OUTDOOR AIR RATE V(oz) = V(bz)/E(z) (CFM)	COOLING Qs	COOLING dT	CALCULATED COOLING AIRFLOW (CFM)	DESIGN COOLING PRIMARY AIRFLOW V(p) (CFM)	COOLING ZONE OUTDOOR RATIO Z(p) = V(oz)/V(pz)
Employee Lounge 2	BREAK ROOM	7	195	5	0.06	35	11.7	46.7	0.8	58.375	5600	19	317	330	0.18
Corridor 3	CORRIDOR	0	320	0	0.06	0	19.2	19.2	0.8	24	1700	19	96	100	0.24
Office 10	OFFICE	1	135	5	0.06	5	8.1	13.1	0.8	16.375	2200	19	125	130	0.13
Office 11	OFFICE	1	140	5	0.06	5	8.4	13.4	0.8	16.75	2200	19	125	130	0.13
Office 12	OFFICE	1	140	5	0.06	5	8.4	13.4	0.8	16.75	2200	19	125	130	0.13
TOTALS		10				50	55.8	105.8					786.64	820	0.24
														Max Z(p)	0.24

COOLING MAXIMUM OUTDOOR RATIO (Max Z(p))	System Ventilation Efficiency 0.15<Z(p)<0.55	E(v)
0.24	0.91	0.9

If Z(p) Exceeds 0.55; Use Appendix A of the Standard
If Z(p) is 0.15 or less System Ventilation Efficiency is 1.0.
System Population [P(s)] 10
Occupant Diversity (Equation 6-7) 1 D = P(s)/Sum all zones (P(z)

	T DB	T wb	RH %	CFM	FRACTION
Return air (Cooling)	72.0	59.4	49.82	690	0.84
Supply air (Cooling)	53.0	52.0	94.10	820	
Supply air (Heating)	90.0			820	
Outside Air (Heating)	20.0			130	0.16
Outside air (Cooling)	105.0	69.0	17.06	130	0.16
O.A. (De-humidification)	80	79	95.89	130	0.16
Altitude	4000	FT			

V(ou) = Uncorrected Outdoor Air Intake 105.8 Equation 6-6 V(ou) = D (Sum all zones R(p)P(z)) + Sum all zones R(a)A(z)

Corrected Outdoor Air Rate V(ot)
COOLING V(ot) = Outdoor Air Intake Fraction 118 Equation 6-8 V(ot) = V(ou)/E(v)

IEQ CR2 INCREASED CLG VENT (10%) 129

GENERAL EXHAUST AIRFLOW 0
MAKE UP AIR FOR EXHAUST REQUIRED 0
COOLING VENTILATION RATE 130

COOLING COIL CALCULATIONS			HEATING CALCULATIONS (INPUT)	
SUMMER MIXED AIR TEMP. (DB/WB)	77.2 F (DB)	60.8 F (WB)	WINTER MIXED AIR TEMP. (DB)	63.8 F (DB)
COOLING SUPPLY AIR TEMP. (DB/WB)	53.0 F (DB)	52.0 F (WB)	HEATING SUPPLY AIR TEMP. (DB)	90.0 F (DB)
ENTHALPY OF MIXED AIR (COOLING)	28.8 Btu/Lb Dry Air (From Psych. Chart)		qs (coil) =	20,014 Btuh
ENTHALPY OF SUPPLY AIR (COOLING)	22.8 Btu/Lb Dry Air (From Psych. Chart)		AIRFLOW	820 CFM
qs (coil) =	18479 Btuh			
q Tot (coil)=	19553 Btuh			
AIRFLOW	820 CFM			
CONDENSATE	0.00 GPM			

Single Zone Systems
V(ot) = Outdoor Air Intake flow
V(ot) = V(oz)

100% Outdoor Air Systems
V(ot) = Sum all zones V(oz)

EQUIPMENT TAG: EXISTING TU-7-#

OUTSIDE AIR CALCULATIONS USING ASHRAE 62-2007 FOR MULTIPLE ZONE SYSTEMS

ROOM NUMBER/NAME	OCCUPANCY CATEGORY (TABLE 6-1)	NUMBER OF PEOPLE P(z)	ZONE FLOOR AREA (S.F.) A(z)	PEOPLE OUTDOOR RATE (CFM/PERS) (TABLE 6-1) R(p)	AREA OUTDOOR RATE (CFM/S.F.) (TABLE 6-1) R(a)	R(p)P(z)	R(a)A(z)	BREATHING ZONE OUTDOOR AIRFLOW (CFM) V(bz) = R(p)P(z) + R(a)A(z)	ZONE DISTRIBUTION EFFECTIVENESS E(z) (TABLE 6-2)	COOLING ZONE OUTDOOR AIR RATE V(oz) = V(bz)/E(z) (CFM)	COOLING Qs	COOLING dT	CALCULATED COOLING AIRFLOW (CFM)	DESIGN COOLING PRIMARY AIRFLOW V(p) (CFM)	COOLING ZONE OUTDOOR RATIO Z(p) = V(oz)/V(pz)
114, 117, & 120 Corridor	CORRIDOR	0	245	0	0.06	0	14.7	14.7	0.8	18.375	1300	19	74	100	0.18
116 Office	OFFICE	1	80	5	0.06	5	4.8	9.8	0.8	12.25	1800	19	102	150	0.08
118 Office	OFFICE	1	80	5	0.06	5	4.8	9.8	0.8	12.25	1800	19	102	150	0.08
120A Available Space	IT ROOM	0	110	5	0.06	0	6.6	6.6	0.8	8.25	2200	19	125	150	0.06
TOTALS		2				10	30.9	40.9					401.81	550	0.18
														Max Z(p)	0.18

COOLING MAXIMUM OUTDOOR RATIO (Max Z(p))	System Ventilation Efficiency 0.15<Z(p)<0.55	E(v)
0.18	0.96625	0.9

If Z(p) Exceeds 0.55; Use Appendix A of the Standard
If Z(p) is 0.15 or less System Ventilation Efficiency is 1.0.
System Population [P(s)] 2
Occupant Diversity (Equation 6-7) 1 D = P(s)/Sum all zones (P(z)

	T DB	T wb	RH %	CFM	FRACTION
Return air (Cooling)	72.0	59.4	49.82	500	0.91
Supply air (Cooling)	53.0	52.0	94.10	550	
Supply air (Heating)	90.0			550	
Outside Air (Heating)	20.0			50	0.09
Outside air (Cooling)	105.0	69.0	17.06	50	0.09
O.A. (De-humidification)	80	79	95.89	50	0.09
Altitude	4000	FT			

V(ou) = Uncorrected Outdoor Air Intake 40.9 Equation 6-6 V(ou) = D (Sum all zones R(p)P(z)) + Sum all zones R(a)A(z)

Corrected Outdoor Air Rate V(ot)
COOLING V(ot) = Outdoor Air Intake Fraction 45 Equation 6-8 V(ot) = V(ou)/E(v)

GENERAL EXHAUST AIRFLOW 0
MAKE UP AIR FOR EXHAUST REQUIRED 0
COOLING VENTILATION RATE 50

COOLING COIL CALCULATIONS			HEATING CALCULATIONS (INPUT)	
SUMMER MIXED AIR TEMP. (DB/WB)	75.0 F (DB)	63.0 F (WB)	WINTER MIXED AIR TEMP. (DB)	67.3 F (DB)
COOLING SUPPLY AIR TEMP. (DB/WB)	53.0 F (DB)	52.0 F (WB)	HEATING SUPPLY AIR TEMP. (DB)	90.0 F (DB)
ENTHALPY OF MIXED AIR (COOLING)	30.6 Btu/Lb Dry Air (From Psych. Chart)		qs (coil) =	11,625 Btuh
ENTHALPY OF SUPPLY AIR (COOLING)	22.8 Btu/Lb Dry Air (From Psych. Chart)		AIRFLOW	550 CFM
qs (coil) =	11253 Btuh			
q Tot (coil)=	16931 Btuh			
AIRFLOW	550 CFM			
CONDENSATE	-0.01 GPM			

Single Zone Systems
V(ot) = Outdoor Air Intake flow
V(ot) = V(oz)

100% Outdoor Air Systems
V(ot) = Sum all zones V(oz)

EQUIPMENT TAG: AHU-1,2 CBIS

OUTSIDE AIR CALCULATIONS USING ASHRAE 62-2007 FOR MULTIPLE ZONE SYSTEMS

ROOM NUMBER/NAME	OCCUPANCY CATEGORY (TABLE 6-1)	NUMBER OF PEOPLE P(z)	ZONE FLOOR AREA (S.F.) A(z)	PEOPLE OUTDOOR RATE (CFM/PERS) (TABLE 6-1) R(p)	AREA OUTDOOR RATE (CFM/S.F.) (TABLE 6-1) R(a)	R(p)P(z)	R(a)A(z)	BREATHING ZONE OUTDOOR AIRFLOW (CFM) V(bz) = R(p)P(z) + R(a)A(z)	ZONE DISTRIBUTION EFFECTIVENESS E(z) (TABLE 6-2)	COOLING ZONE OUTDOOR AIR RATE V(oz) = V(bz)/E(z) (CFM)	COOLING Qs	COOLING dT	CALCULATED COOLING AIRFLOW (CFM)	DESIGN COOLING PRIMARY AIRFLOW V(p) (CFM)	COOLING ZONE OUTDOOR RATIO Z(p) = V(oz)/V(pz)
CHECKED BAGGAGE INSPECTION SYSTEM (CBIS)	OCCUPIABLE STORAGE	4	11750	5	0.12	20	1410	1430	0.8	1787.5	237820	19	13,459	14000	0.13
TOTALS		4				20	1410	1430					13459	14000	0.13
														Max Z(p)	0.13

COOLING MAXIMUM OUTDOOR RATIO (Max Z(p))	System Ventilation Efficiency 0.15<Z(p)<0.55	E(v)
0.13	1	1.0

If Z(p) Exceeds 0.55; Use Appendix A of the Standard
If Z(p) is 0.15 or less System Ventilation Efficiency is 1.0.
System Population [P(s)] 4
Occupant Diversity (Equation 6-7) 1 D = P(s)/Sum all zones (P(z)

	T DB	T wb	RH %	CFM	FRACTION
Return air (Cooling)	72.0	59.4	49.82	12400	0.89
Supply air (Cooling)	53.0	52.0	94.10	14000	
Supply air (Heating)	90.0			14000	
Outside Air (Heating)	20.0			1600	0.11
Outside air (Cooling)	105.0	69.0	17.06	1600	0.11
O.A. (De-humidification)	80	79	95.89	1600	0.11
Altitude	4000	FT			

V(ou) = Uncorrected Outdoor Air Intake 1430 Equation 6-6 V(ou) = D (Sum all zones R(p)P(z)) + Sum all zones R(a)A(z)

Corrected Outdoor Air Rate V(ot)
COOLING V(ot) = Outdoor Air Intake Fraction 1430 Equation 6-8 V(ot) = V(ou)/E(v)

IEQ CR2 INCREASED CLG VENT (10%) 1573

GENERAL EXHAUST AIRFLOW 0
MAKE UP AIR FOR EXHAUST REQUIRED 0
COOLING VENTILATION RATE 1600

COOLING COIL CALCULATIONS			HEATING CALCULATIONS (INPUT)	
SUMMER MIXED AIR TEMP. (DB/WB)	75.8 F (DB)	60.2 F (WB)	WINTER MIXED AIR TEMP. (DB)	66.1 F (DB)
COOLING SUPPLY AIR TEMP. (DB/WB)	53.0 F (DB)	52.0 F (WB)	HEATING SUPPLY AIR TEMP. (DB)	90.0 F (DB)
ENTHALPY OF MIXED AIR (COOLING)	28.4 Btu/Lb Dry Air (From Psych. Chart)		qs (coil) =	311,736 Btuh
ENTHALPY OF SUPPLY AIR (COOLING)	22.8 Btu/Lb Dry Air (From Psych. Chart)		AIRFLOW	14000 CFM
qs (coil) =	296484 Btuh			
q Tot (coil)=	308948 Btuh			
AIRFLOW	14000 CFM			
CONDENSATE	0.00 GPM			

Single Zone Systems
V(ot) = Outdoor Air Intake flow 148242
V(ot) = V(oz) 154474

100% Outdoor Air Systems
V(ot) = Sum all zones V(oz)

EQUIPMENT TAG: AHU-3 CBRA AREA

OUTSIDE AIR CALCULATIONS USING ASHRAE 62-2007 FOR MULTIPLE ZONE SYSTEMS

ROOM NUMBER/NAME	OCCUPANCY CATEGORY (TABLE 6-1)	NUMBER OF PEOPLE P(z)	ZONE FLOOR AREA (S.F.) A(z)	PEOPLE OUTDOOR RATE (CFM/PERS) (TABLE 6-1) R(p)	AREA OUTDOOR RATE (CFM/S.F.) (TABLE 6-1) R(a)	R(p)P(z)	R(a)A(z)	BREATHING ZONE OUTDOOR AIRFLOW (CFM) V(bz) = R(p)P(z) + R(a)A(z)	ZONE DISTRIBUTION EFFECTIVENESS E(z) (TABLE 6-2)	COOLING ZONE OUTDOOR AIR RATE V(oz) = V(bz)/E(z) (CFM)	COOLING Qs	COOLING dT	CALCULATED COOLING AIRFLOW (CFM)	DESIGN COOLING PRIMARY AIRFLOW V(p) (CFM)	COOLING ZONE OUTDOOR RATIO Z(p) = V(oz)/V(pz)
CHECKED BAGGAGE RESOLUTION AREA (CBRA)	OCCUPIABLE STORAGE	14	3510	5	0.12	70	421.2	491.2	0.8	614	98700	19	5,586	5600	0.11
OVERSIZED BAGGAGE	OCCUPIABLE STORAGE	0	875	5	0.12	0	105	105	0.8	131.25	9100	19	515	550	0.24
TSA SPARE PARTS	OCCUPIABLE STORAGE	2	155	5	0.12	10	18.6	28.6	0.8	35.75	3200	19	181	200	0.18
BHS MAINTENANCE	OCCUPIABLE STORAGE	2	155	5	0.12	10	18.6	28.6	0.8	35.75	1900	19	108	150	0.24
TOTALS		18				90	563.4	653.4						6500	0.24
														Max Z(p)	0.24

COOLING MAXIMUM OUTDOOR RATIO (Max Z(p))	System Ventilation Efficiency 0.15<Z(p)<0.55	E(v)
0.24	0.91	0.9

If Z(p) Exceeds 0.55; Use Appendix A of the Standard
If Z(p) is 0.15 or less System Ventilation Efficiency is 1.0.
System Population [P(s)] 18
Occupant Diversity (Equation 6-7) 1 D = P(s)/Sum all zones (P(z)

	T DB	T wb	RH %	CFM	FRACTION
Return air (Cooling)	72.0	59.4	49.82	5700	0.88
Supply air (Cooling)	53.0	52.0	94.10	6500	
Supply air (Heating)	90.0			6500	
Outside Air (Heating)	20.0			800	0.12
Outside air (Cooling)	105.0	69.0	17.06	800	0.12
O.A. (De-humidification)	80	79	95.89	800	0.12
Altitude	4000	FT			

V(ou) = Uncorrected Outdoor Air Intake 653.4 Equation 6-6 V(ou) = D (Sum all zones R(p)P(z)) + Sum all zones R(a)A(z)

Corrected Outdoor Air Rate V(ot)
COOLING V(ot) = Outdoor Air Intake Fraction 726 Equation 6-8 V(ot) = V(ou)/E(v)

GENERAL EXHAUST AIRFLOW 0
MAKE UP AIR FOR EXHAUST REQUIRED 0
COOLING VENTILATION RATE 800

COOLING COIL CALCULATIONS			HEATING CALCULATIONS (INPUT)	
SUMMER MIXED AIR TEMP. (DB/WB)	76.1 F (DB)	60.4 F (WB)	WINTER MIXED AIR TEMP. (DB)	65.6 F (DB)
COOLING SUPPLY AIR TEMP. (DB/WB)	53.0 F (DB)	52.0 F (WB)	HEATING SUPPLY AIR TEMP. (DB)	90.0 F (DB)
ENTHALPY OF MIXED AIR (COOLING)	28.5 Btu/Lb Dry Air (From Psych. Chart)		qs (coil) =	147,498 Btuh
ENTHALPY OF SUPPLY AIR (COOLING)	22.8 Btu/Lb Dry Air (From Psych. Chart)		AIRFLOW	6500 CFM
qs (coil) =	139407 Btuh			
q Tot (coil)=	147307 Btuh			
AIRFLOW	6500 CFM			
CONDENSATE	0.00 GPM			

Single Zone Systems
V(ot) = Outdoor Air Intake flow
V(ot) = V(oz)

100% Outdoor Air Systems
V(ot) = Sum all zones V(oz)

TEXAS REGISTRATION: F-000014
Alegro Engineering
Consulting Engineers
5822 Cromo Dr. Suite 105
El Paso, Texas 79912
Tel. 915.533.0700

REFERENCES -- BENCHMARK

DATE	REVISIONS	BY

CONSULTANT'S NAME

mijares mora
ARCHITECTS INC.
111 N. FESTIVAL
TEL: 915-542-1591
EL PASO, TEXAS 79912
FAX: 542-1594

ALTERATION OF A SEALED DOCUMENT WITHOUT PROPER NOTIFICATION TO THE RESPONSIBLE ENGINEER IS AN OFFENSE UNDER THE TEXAS ENGINEERING PRACTICE ACT.

ARCHITECT'S SEAL

STATE OF TEXAS
ROLANDO LEGARRETA
84714
LICENSED
PROFESSIONAL ENGINEER
5/26/16

SCALE

DATE MAY 2016
DESIGN BY ALEGRO
DRAWN BY GAG
CHKD. BY GAG
APPD. BY RL
JOB NO. 14-154

PROJECT NAME

EL PASO INTERNATIONAL AIRPORT
CHECKED BAGGAGE INSPECTION SYSTEM
6701 CONVAIR RD. EL PASO, TEXAS

EL PASO INTERNATIONAL AIRPORT

CITY OF EL PASO

SHEET TITLE
MECHANICAL CALCULATIONS

M0.03

FILE NO. XXXX
SHEET 4 OF 34

EQUIPMENT TAG: BC-1

OUTSIDE AIR CALCULATIONS USING ASHRAE 62-2007 FOR MULTIPLE ZONE SYSTEMS

ROOM NUMBERNAME	OCCUPANCY CATEGORY (TABLE6-1)	NUMBER OF PEOPLE P(z)	ZONE FLOOR AREA (S.F.) A(z)	PEOPLE OUTDOOR RATE (CFM/PERS) (TABLE6-1) R(p)	AREA OUTDOOR RATE (CFM/S.F.) (TABLE6-1) R(a)	R(p)P(z)	R(a)A(z)	BREATHING ZONE OUTDOOR AIRFLOW (CFM) V(bz) = R(p)P(z) + R(a)A(z)	ZONE DISTRIBUTION EFFECTIVENESS E(z) (TABLE6-2)	COOLING ZONE OUTDOOR AIR RATE V(oz) = V(bz)/E(z) (CFM)	COOLING Qs	COOLING dT	CALCULATED COOLING AIRFLOW (CFM)	DESIGN COOLING PRIMARY AIRFLOW V(p) (CFM)	COOLING ZONE OUTDOOR RATIO Z(p) Z(p) = V(oz)/V(pz)
Employee/Locker/Office	OFFICE	21	820	5	0.06	105	49.2	154.2	0.8	192.75	13400	19	758	800	0.24
TOTALS		21				105	49.2	154.2					758.35	800	0.24
		System Ventilation Efficiency												Max Z(p)	0.24
		0.15<Z(p)<0.55	E(v)												
		0.24	0.91	0.9											

	T DB	T wb	RH %	CFM	FRACTION
Return air (Cooling)	72.0	59.4	49.82	620	0.78
Supply air (Cooling)	53.0	52.0	94.10	800	
Supply air (Heating)	90.0			800	
Outside Air (Heating)	20.0			180	0.23
Outside air (Cooling)	105.0	69.0	17.06	180	0.23
O.A. (De-humidification)	80	79	96.89	180	0.23
Altitude	4000	FT			

If Z(p) Exceeds 0.55; Use Appendix A of the Standard
If Z(p) is 0.15 or less System Ventilation Efficiency is 1.0.
System Population [P(s)] 21
Occupant Diversity (Equation 6-7) 1 D = P(s)/Sum all zones (P(z)

V(ou) = Uncorrected Outdoor Air Intake 154.2 Equation 6-6 V(ou) = D (Sum all zones R(p)P(z)) + Sum all zones R(a)A(z)

Corrected Outdoor Air Rate V(ot)
COOLING V(ot) = Outdoor Air Intake Fraction 171 Equation 6-8 V(ot) = V(ou)/E(v)

GENERAL EXHAUST AIRFLOW 0
MAKE UP AIR FOR EXHAUST REQUIRED 0
COOLING VENTILATION RATE 180

COOLING COIL CALCULATIONS			HEATING CALCULATIONS (INPUT)		
SUMMER MIXED AIR TEMP. (DB/WB)	79.4 F (DB)	61.8 F (WB)	WINTER MIXED AIR TEMP. (DB)	60.3 F (DB)	
COOLING SUPPLY AIR TEMP. (DB/WB)	53.0 F (DB)	52.0 F (WB)	HEATING SUPPLY AIR TEMP. (DB)	90.0 F (DB)	
ENTHALPY OF MIXED AIR (COOLING)	29.6 Btu/Lb Dry Air (From Psych. Chart)		qs (coil) = 22,097 Btuh		
ENTHALPY OF SUPPLY AIR (COOLING)	22.8 Btu/Lb Dry Air (From Psych. Chart)		AIRFLOW 800 CFM		
qs (coil) =	19600 Btuh				
q Tot (coil)=	21494 Btuh				
AIRFLOW	800 CFM				
CONDENSATE	0.00 GPM				

Single Zone Systems
V(ot) = Outdoor Air Intake flow
V(ot) = V(oz)

100% Outdoor Air Systems
V(ot) = Sum all zones V(oz)

EQUIPMENT TAG: BC-2

OUTSIDE AIR CALCULATIONS USING ASHRAE 62-2007 FOR MULTIPLE ZONE SYSTEMS

ROOM NUMBERNAME	OCCUPANCY CATEGORY (TABLE6-1)	NUMBER OF PEOPLE P(z)	ZONE FLOOR AREA (S.F.) A(z)	PEOPLE OUTDOOR RATE (CFM/PERS) (TABLE6-1) R(p)	AREA OUTDOOR RATE (CFM/S.F.) (TABLE6-1) R(a)	R(p)P(z)	R(a)A(z)	BREATHING ZONE OUTDOOR AIRFLOW (CFM) V(bz) = R(p)P(z) + R(a)A(z)	ZONE DISTRIBUTION EFFECTIVENESS E(z) (TABLE6-2)	COOLING ZONE OUTDOOR AIR RATE V(oz) = V(bz)/E(z) (CFM)	COOLING Qs	COOLING dT	CALCULATED COOLING AIRFLOW (CFM)	DESIGN COOLING PRIMARY AIRFLOW V(p) (CFM)	COOLING ZONE OUTDOOR RATIO Z(p) Z(p) = V(oz)/V(pz)
123 BHS/Control Room	OFFICE	5	445	5	0.06	25	26.7	51.7	0.8	64.625	22700	19	1.285	1300	0.05
TOTALS		5				25	26.7	51.7					1204.66	1300	0.05
		System Ventilation Efficiency												Max Z(p)	0.05
		0.15<Z(p)<0.55	E(v)												
		0.05	1	1.0											

	T DB	T wb	RH %	CFM	FRACTION
Return air (Cooling)	72.0	59.4	49.82	1240	0.95
Supply air (Cooling)	53.0	52.0	94.10	1300	
Supply air (Heating)	90.0			1300	
Outside Air (Heating)	20.0			60	0.05
Outside air (Cooling)	105.0	69.0	17.06	60	0.05
O.A. (De-humidification)	80	79	96.89	60	0.05
Altitude	4000	FT			

If Z(p) Exceeds 0.55; Use Appendix A of the Standard
If Z(p) is 0.15 or less System Ventilation Efficiency is 1.0.
System Population [P(s)] 5
Occupant Diversity (Equation 6-7) 1 D = P(s)/Sum all zones (P(z)

V(ou) = Uncorrected Outdoor Air Intake 51.7 Equation 6-6 V(ou) = D (Sum all zones R(p)P(z)) + Sum all zones R(a)A(z)

Corrected Outdoor Air Rate V(ot)
COOLING V(ot) = Outdoor Air Intake Fraction 52 Equation 6-8 V(ot) = V(ou)/E(v)

GENERAL EXHAUST AIRFLOW 0
MAKE UP AIR FOR EXHAUST REQUIRED 0
COOLING VENTILATION RATE 60

COOLING COIL CALCULATIONS			HEATING CALCULATIONS (INPUT)		
SUMMER MIXED AIR TEMP. (DB/WB)	73.5 F (DB)	59.5 F (WB)	WINTER MIXED AIR TEMP. (DB)	69.6 F (DB)	
COOLING SUPPLY AIR TEMP. (DB/WB)	53.0 F (DB)	52.0 F (WB)	HEATING SUPPLY AIR TEMP. (DB)	90.0 F (DB)	
ENTHALPY OF MIXED AIR (COOLING)	28.2 Btu/Lb Dry Air (From Psych. Chart)		qs (coil) = 24,664 Btuh		
ENTHALPY OF SUPPLY AIR (COOLING)	22.8 Btu/Lb Dry Air (From Psych. Chart)		AIRFLOW 1300 CFM		
qs (coil) =	24812 Btuh				
q Tot (coil)=	27594 Btuh				
AIRFLOW	1300 CFM				
CONDENSATE	0.00 GPM				

Single Zone Systems
V(ot) = Outdoor Air Intake flow
V(ot) = V(oz)

100% Outdoor Air Systems
V(ot) = Sum all zones V(oz)

EQUIPMENT TAG: BC-3

OUTSIDE AIR CALCULATIONS USING ASHRAE 62-2007 FOR MULTIPLE ZONE SYSTEMS

ROOM NUMBERNAME	OCCUPANCY CATEGORY (TABLE6-1)	NUMBER OF PEOPLE P(z)	ZONE FLOOR AREA (S.F.) A(z)	PEOPLE OUTDOOR RATE (CFM/PERS) (TABLE6-1) R(p)	AREA OUTDOOR RATE (CFM/S.F.) (TABLE6-1) R(a)	R(p)P(z)	R(a)A(z)	BREATHING ZONE OUTDOOR AIRFLOW (CFM) V(bz) = R(p)P(z) + R(a)A(z)	ZONE DISTRIBUTION EFFECTIVENESS E(z) (TABLE6-2)	COOLING ZONE OUTDOOR AIR RATE V(oz) = V(bz)/E(z) (CFM)	COOLING Qs	COOLING dT	CALCULATED COOLING AIRFLOW (CFM)	DESIGN COOLING PRIMARY AIRFLOW V(p) (CFM)	COOLING ZONE OUTDOOR RATIO Z(p) Z(p) = V(oz)/V(pz)
122 (OSR)	OFFICE	5	430	5	0.06	25	25.8	50.8	0.8	63.5	20400	19	1.154	1300	0.05
TOTALS		5				25	25.8	50.8					1154.50	1300	0.05
		System Ventilation Efficiency												Max Z(p)	0.05
		0.15<Z(p)<0.55	E(v)												
		0.05	1	1.0											

	T DB	T wb	RH %	CFM	FRACTION
Return air (Cooling)	72.0	59.4	49.82	1240	0.95
Supply air (Cooling)	53.0	52.0	94.10	1300	
Supply air (Heating)	90.0			1300	
Outside Air (Heating)	20.0			60	0.05
Outside air (Cooling)	105.0	69.0	17.06	60	0.05
O.A. (De-humidification)	80	79	96.89	60	0.05
Altitude	4000	FT			

If Z(p) Exceeds 0.55; Use Appendix A of the Standard
If Z(p) is 0.15 or less System Ventilation Efficiency is 1.0.
System Population [P(s)] 5
Occupant Diversity (Equation 6-7) 1 D = P(s)/Sum all zones (P(z)

V(ou) = Uncorrected Outdoor Air Intake 50.8 Equation 6-6 V(ou) = D (Sum all zones R(p)P(z)) + Sum all zones R(a)A(z)

Corrected Outdoor Air Rate V(ot)
COOLING V(ot) = Outdoor Air Intake Fraction 51 Equation 6-8 V(ot) = V(ou)/E(v)

GENERAL EXHAUST AIRFLOW 0
MAKE UP AIR FOR EXHAUST REQUIRED 0
COOLING VENTILATION RATE 60

COOLING COIL CALCULATIONS			HEATING CALCULATIONS (INPUT)		
SUMMER MIXED AIR TEMP. (DB/WB)	73.5 F (DB)	59.5 F (WB)	WINTER MIXED AIR TEMP. (DB)	69.6 F (DB)	
COOLING SUPPLY AIR TEMP. (DB/WB)	53.0 F (DB)	52.0 F (WB)	HEATING SUPPLY AIR TEMP. (DB)	90.0 F (DB)	
ENTHALPY OF MIXED AIR (COOLING)	28.2 Btu/Lb Dry Air (From Psych. Chart)		qs (coil) = 24,664 Btuh		
ENTHALPY OF SUPPLY AIR (COOLING)	22.8 Btu/Lb Dry Air (From Psych. Chart)		AIRFLOW 1300 CFM		
qs (coil) =	24812 Btuh				
q Tot (coil)=	27594 Btuh				
AIRFLOW	1300 CFM				
CONDENSATE	0.00 GPM				

Single Zone Systems
V(ot) = Outdoor Air Intake flow
V(ot) = V(oz)

100% Outdoor Air Systems
V(ot) = Sum all zones V(oz)

EQUIPMENT TAG: BC-4

OUTSIDE AIR CALCULATIONS USING ASHRAE 62-2007 FOR MULTIPLE ZONE SYSTEMS

ROOM NUMBERNAME	OCCUPANCY CATEGORY (TABLE6-1)	NUMBER OF PEOPLE P(z)	ZONE FLOOR AREA (S.F.) A(z)	PEOPLE OUTDOOR RATE (CFM/PERS) (TABLE6-1) R(p)	AREA OUTDOOR RATE (CFM/S.F.) (TABLE6-1) R(a)	R(p)P(z)	R(a)A(z)	BREATHING ZONE OUTDOOR AIRFLOW (CFM) V(bz) = R(p)P(z) + R(a)A(z)	ZONE DISTRIBUTION EFFECTIVENESS E(z) (TABLE6-2)	COOLING ZONE OUTDOOR AIR RATE V(oz) = V(bz)/E(z) (CFM)	COOLING Qs	COOLING dT	CALCULATED COOLING AIRFLOW (CFM)	DESIGN COOLING PRIMARY AIRFLOW V(p) (CFM)	COOLING ZONE OUTDOOR RATIO Z(p) Z(p) = V(oz)/V(pz)
111 Break Room	BREAK ROOM	10	395	5	0.06	50	23.7	73.7	0.8	92.125	7900	19	447	400	0.20
112 Training	OFFICE	7	200	5	0.06	35	12	47	0.8	58.75	5000	19	283	300	0.20
113 Office	OFFICE	1	140	5	0.06	5	8.4	13.4	0.8	16.75	2200	19	125	150	0.11
110 Office	OFFICE	3	210	5	0.06	15	12.6	27.6	0.8	34.5	5100	19	289	300	0.12
TOTALS		21				105	56.7	161.7					1143.18	1210	0.20
		System Ventilation Efficiency												Max Z(p)	0.20
		0.15<Z(p)<0.55	E(v)												
		0.20	0.94072261	0.9											

	T DB	T wb	RH %	CFM	FRACTION
Return air (Cooling)	72.0	59.4	49.82	1010	0.83
Supply air (Cooling)	53.0	52.0	94.10	1210	
Supply air (Heating)	90.0			1210	
Outside Air (Heating)	20.0			200	0.17
Outside air (Cooling)	105.0	69.0	17.06	200	0.17
O.A. (De-humidification)	80	79	96.89	200	0.17
Altitude	4000	FT			

If Z(p) Exceeds 0.55; Use Appendix A of the Standard
If Z(p) is 0.15 or less System Ventilation Efficiency is 1.0.
System Population [P(s)] 21
Occupant Diversity (Equation 6-7) 1 D = P(s)/Sum all zones (P(z)

V(ou) = Uncorrected Outdoor Air Intake 161.7 Equation 6-6 V(ou) = D (Sum all zones R(p)P(z)) + Sum all zones R(a)A(z)

Corrected Outdoor Air Rate V(ot)
COOLING V(ot) = Outdoor Air Intake Fraction 180 Equation 6-8 V(ot) = V(ou)/E(v)

GENERAL EXHAUST AIRFLOW 0
MAKE UP AIR FOR EXHAUST REQUIRED 0
COOLING VENTILATION RATE 200

COOLING COIL CALCULATIONS			HEATING CALCULATIONS (INPUT)		
SUMMER MIXED AIR TEMP. (DB/WB)	77.5 F (DB)	61.8 F (WB)	WINTER MIXED AIR TEMP. (DB)	63.4 F (DB)	
COOLING SUPPLY AIR TEMP. (DB/WB)	53.0 F (DB)	52.0 F (WB)	HEATING SUPPLY AIR TEMP. (DB)	90.0 F (DB)	
ENTHALPY OF MIXED AIR (COOLING)	29.0 Btu/Lb Dry Air (From Psych. Chart)		qs (coil) = 29,927 Btuh		
ENTHALPY OF SUPPLY AIR (COOLING)	22.8 Btu/Lb Dry Air (From Psych. Chart)		AIRFLOW 1210 CFM		
qs (coil) =	27519 Btuh				
q Tot (coil)=	29594 Btuh				
AIRFLOW	1210 CFM				
CONDENSATE	0.00 GPM				

Single Zone Systems
V(ot) = Outdoor Air Intake flow
V(ot) = V(oz)

100% Outdoor Air Systems
V(ot) = Sum all zones V(oz)

EQUIPMENT TAG: BC-5

OUTSIDE AIR CALCULATIONS USING ASHRAE 62-2007 FOR MULTIPLE ZONE SYSTEMS

ROOM NUMBERNAME	OCCUPANCY CATEGORY (TABLE6-1)	NUMBER OF PEOPLE P(z)	ZONE FLOOR AREA (S.F.) A(z)	PEOPLE OUTDOOR RATE (CFM/PERS) (TABLE6-1) R(p)	AREA OUTDOOR RATE (CFM/S.F.) (TABLE6-1) R(a)	R(p)P(z)	R(a)A(z)	BREATHING ZONE OUTDOOR AIRFLOW (CFM) V(bz) = R(p)P(z) + R(a)A(z)	ZONE DISTRIBUTION EFFECTIVENESS E(z) (TABLE6-2)	COOLING ZONE OUTDOOR AIR RATE V(oz) = V(bz)/E(z) (CFM)	COOLING Qs	COOLING dT	CALCULATED COOLING AIRFLOW (CFM)	DESIGN COOLING PRIMARY AIRFLOW V(p) (CFM)	COOLING ZONE OUTDOOR RATIO Z(p) Z(p) = V(oz)/V(pz)
Office 18	OFFICE	1	80	5	0.06	5	4.8	9.8	0.8	12.25	1800	19	102	120	0.10
Office 19	OFFICE	1	85	5	0.06	5	5.1	10.1	0.8	12.625	1800	19	102	120	0.11
Office 20	OFFICE	1	100	5	0.06	5	6	11	0.8	13.75	1900	19	108	120	0.11
Office 21	OFFICE	1	85	5	0.06	5	5.1	10.1	0.8	12.625	1800	19	102	120	0.11
Corridor 3	CORRIDOR	0	130	0	0.06	0	7.8	7.8	0.8	9.75	700	19	40	100	0.10
Employee Lounge 4	LOUNGE	7	260	5	0.06	35	15.6	50.6	0.8	63.25	6100	19	345	350	0.18
Locker Room	LOCKER	5	105	0	0.12	0	12.6	12.6	0.8	15.75	1900	19	108	120	0.13
TOTALS		16				55	57	112					905.49	1050	0.18
		System Ventilation Efficiency												Max Z(p)	0.18
		0.15<Z(p)<0.55	E(v)												
		0.18	0.97	0.9											

	T DB	T wb	RH %	CFM	FRACTION
Return air (Cooling)	72.0	59.4	49.82	920	0.88
Supply air (Cooling)	53.0	52.0	94.10	1050	
Supply air (Heating)	90.0			1050	
Outside Air (Heating)	20.0			130	0.12
Outside air (Cooling)	105.0	69.0	17.06	130	0.12
O.A. (De-humidification)	80	79	96.89	130	0.12
Altitude	4000	FT			

If Z(p) Exceeds 0.55; Use Appendix A of the Standard
If Z(p) is 0.15 or less System Ventilation Efficiency is 1.0.
System Population [P(s)] 16
Occupant Diversity (Equation 6-7) 1 D = P(s)/Sum all zones (P(z)

V(ou) = Uncorrected Outdoor Air Intake 112 Equation 6-6 V(ou) = D (Sum all zones R(p)P(z)) + Sum all zones R(a)A(z)

Corrected Outdoor Air Rate V(ot)
COOLING V(ot) = Outdoor Air Intake Fraction 124 Equation 6-8 V(ot) = V(ou)/E(v)

GENERAL EXHAUST AIRFLOW 0
MAKE UP AIR FOR EXHAUST REQUIRED 0
COOLING VENTILATION RATE 130

COOLING COIL CALCULATIONS			HEATING CALCULATIONS (INPUT)		
SUMMER MIXED AIR TEMP. (DB/WB)	76.1 F (DB)	60.7 F (WB)	WINTER MIXED AIR TEMP. (DB)	65.6 F (DB)	
COOLING SUPPLY AIR TEMP. (DB/WB)	53.0 F (DB)	52.0 F (WB)	HEATING SUPPLY AIR TEMP. (DB)	90.0 F (DB)	
ENTHALPY OF MIXED AIR (COOLING)	28.8 Btu/Lb Dry Air (From Psych. Chart)		qs (coil) = 23,864 Btuh		
ENTHALPY OF SUPPLY AIR (COOLING)	22.8 Btu/Lb Dry Air (From Psych. Chart)		AIRFLOW 1050 CFM		
qs (coil) =	22643 Btuh				
q Tot (coil)=	24749 Btuh				
AIRFLOW	1050 CFM				
CONDENSATE	0.00 GPM				

Single Zone Systems
V(ot) = Outdoor Air Intake flow
V(ot) = V(oz)

100% Outdoor Air Systems
V(ot) = Sum all zones V(oz)

EQUIPMENT TAG: BC-6

OUTSIDE AIR CALCULATIONS USING ASHRAE 62-2007 FOR MULTIPLE ZONE SYSTEMS

ROOM NUMBERNAME	OCCUPANCY CATEGORY (TABLE6-1)	NUMBER OF PEOPLE P(z)	ZONE FLOOR AREA (S.F.) A(z)	PEOPLE OUTDOOR RATE (CFM/PERS) (TABLE6-1) R(p)	AREA OUTDOOR RATE (CFM/S.F.) (TABLE6-1) R(a)	R(p)P(z)	R(a)A(z)	BREATHING ZONE OUTDOOR AIRFLOW (CFM) V(bz) = R(p)P(z) + R(a)A(z)	ZONE DISTRIBUTION EFFECTIVENESS E(z) (TABLE6-2)	COOLING ZONE OUTDOOR AIR RATE V(oz) = V(bz)/E(z) (CFM)	COOLING Qs	COOLING dT	CALCULATED COOLING AIRFLOW (CFM)	DESIGN COOLING PRIMARY AIRFLOW V(p) (CFM)	COOLING ZONE OUTDOOR RATIO Z(p) Z(p) = V(oz)/V(pz)
101 Break Room	BREAK ROOM	18	725	5	0.06	90	43.5	133.5	0.8	166.875	12000	19	730	750	0.22
103 BOD Office	OFFICE	3	215	5	0.06	15	12.9	27.9	0.8	34.875	5100	19	289	300	0.12
104 Corridor	CORRIDOR	0	80	0	0.06	0	4.8	4.8	0.8	6	400	19	23	50	0.12
105 TSSE Office	OFFICE	2	265	5	0.06	10	15.9	25.9	0.8	32.375	4300	19	243	250	0.13
TOTALS		23				115	77.1	192.1					1264.66	1350	0.22
		System Ventilation Efficiency												Max Z(p)	0.22
		0.15<Z(p)<0.55	E(v)												
		0.22	0.9275	0.9											

	T DB	T wb	RH %	CFM	FRACTION
Return air (Cooling)	72.0	59.4	49.82	1130	0.84
Supply air (Cooling)	53.0	52.0	94.10	1350	
Supply air (Heating)	90.0			1350	
Outside Air (Heating)	20.0			220	0.16
Outside air (Cooling)	105.0	69.0	17.06	220	0.16
O.A. (De-humidification)	80	79	96.89	220	0.16
Altitude	4000	FT			

If Z(p) Exceeds 0.55; Use Appendix A of the Standard
If Z(p) is 0.15 or less System Ventilation Efficiency is 1.0.
System Population [P(s)] 23
Occupant Diversity (Equation 6-7) 1 D = P(s)/Sum all zones (P(z)

V(ou) = Uncorrected Outdoor Air Intake 192.1 Equation 6-6 V(ou) = D (Sum all zones R(p)P(z)) + Sum all zones R(a)A(z)

Corrected Outdoor Air Rate V(ot)
COOLING V(ot) = Outdoor Air Intake Fraction 213 Equation 6-8 V(ot) = V(ou)/E(v)

GENERAL EXHAUST AIRFLOW 0
MAKE UP AIR FOR EXHAUST REQUIRED 0
COOLING VENTILATION RATE 220

COOLING COIL CALCULATIONS			HEATING CALCULATIONS (INPUT)		
SUMMER MIXED AIR TEMP. (DB/WB)	77.4 F (DB)	61.3 F (WB)	WINTER MIXED AIR TEMP. (DB)	63.5 F (DB)	
COOLING SUPPLY AIR TEMP. (DB/WB)	53.0 F (DB)	52.0 F (WB)	HEATING SUPPLY AIR TEMP. (DB)	90.0 F (DB)	
ENTHALPY OF MIXED AIR (COOLING)	29.2 Btu/Lb Dry Air (From Psych. Chart)		qs (coil) = 33,238 Btuh		
ENTHALPY OF SUPPLY AIR (COOLING)	22.8 Btu/Lb Dry Air (From Psych. Chart)		AIRFLOW 1350 CFM		
qs (coil) =	30600 Btuh				
q Tot (coil)=	33835 Btuh				
AIRFLOW	1350 CFM				
CONDENSATE	0.00 GPM				

Single Zone Systems
V(ot) = Outdoor Air Intake flow
V(ot) = V(oz)

100% Outdoor Air Systems
V(ot) = Sum all zones V(oz)

TEXAS REGISTRATION: F-000014
Alegro Engineering
Consulting Engineers
5822 Cromo Dr., Suite 105
El Paso, Texas 79912
Tel. 915.533.0700

ALTERATION OF A SEALED DOCUMENT WITHOUT THE KNOWLEDGE AND CONSENT OF THE ENGINEER IS AN OFFENSE UNDER THE TEXAS ENGINEERING PRACTICE ACT.

ARCHITECT'S SEAL

STATE OF TEXAS
ROLANDO LEGARRETA
84714
LICENSED PROFESSIONAL ENGINEER
5/16/16

CONSULTANT'S NAME

mijares ● mora
ARCHITECTS INC.
EL PASO, TEXAS 79912
TEL: 915-542-1991
FAX: 542-1994

REFERENCES -- BENCHMARK		
DATE	REVISIONS	BY

SCALE

DATE	MAY 2016
DESIGN BY	AEGRO
DRAWN BY	GAG
CHKD. BY	GAG
APPD. BY	RL
JOB NO.	14-154

PROJECT NAME

EL PASO INTERNATIONAL AIRPORT
CHECKED BAGGAGE INSPECTION SYSTEM
8701 CONVAIR RD. EL PASO, TEXAS

EL PASO INTERNATIONAL AIRPORT

CITY OF EL PASO

SHEET TITLE
MECHANICAL CALCULATIONS

M0.04

FILE NO. XXXX

SHEET 5 OF 34

COMcheck Software Version 4.0.2.9

Mechanical Compliance Certifi

Section 1: Project Information

Energy Code: **2009 IECC**
Project Title: EL PASO INTERNATIONAL AIRPORT CHECKED BAGGAGED INSPECTION SYSTEM
Project Type: Addition

Construction Site:	Owner/Agent:	Designer/Contractor:
6701 CONVAIR RD. EL PASO, TX 79925	CITY OF EL PASO	ROLANDO LEGARRETA ALEGRO ENGINEERING 5822 CROMO DR. SUITE 105 EL PASO , TX 79912

Section 2: General Information

Building Location (for weather data): El Paso, Texas
Climate Zone: 3b

Section 3: Mechanical Systems List

Quantity System Type & Description

1 AHU-1 (Single Zone) :
Heating: 1 each - Hydronic or Steam Coil, Hot Water, Capacity = 188 kBtu/h
No minimum efficiency requirement applies
Cooling: 1 each - Hydronic Coil, Capacity = 182 kBtu/h, Air Economizer
No minimum efficiency requirement applies
Fan System: FAN SYSTEM 1 | AHU-1 & 2 -- Compliance (Brake HP method) : Passes

Fans:
FAN 1 Supply, Constant Volume, 7000 CFM, 10.0 motor nameplate hp, 7.5 brake hp
FAN 2 Exhaust, Constant Volume, 7000 CFM, 2.0 motor nameplate hp, 1.5 brake hp
Pressure Drop Credits:
Particulate filtration credit: MERV 13 through 15, 1.5251 credit
Particulate filtration credit: MERV 9 through 12, 0.8473 credit
Fully ducted return and/or exhaust air systems, 0.8473 credit

1 AHU-2 (Single Zone) :
Heating: 1 each - Hydronic or Steam Coil, Hot Water, Capacity = 188 kBtu/h
No minimum efficiency requirement applies
Cooling: 1 each - Hydronic Coil, Capacity = 182 kBtu/h, Air Economizer
No minimum efficiency requirement applies
Fan System: FAN SYSTEM 1 | AHU-1 & 2 -- Compliance (Brake HP method) : Passes

Fans:
FAN 1 Supply, Constant Volume, 7000 CFM, 10.0 motor nameplate hp, 7.5 brake hp
FAN 2 Exhaust, Constant Volume, 7000 CFM, 2.0 motor nameplate hp, 1.5 brake hp
Pressure Drop Credits:
Particulate filtration credit: MERV 13 through 15, 1.5251 credit
Particulate filtration credit: MERV 9 through 12, 0.8473 credit
Fully ducted return and/or exhaust air systems, 0.8473 credit

1 AHU-3 (Single Zone) :
Heating: 1 each - Hydronic or Steam Coil, Hot Water, Capacity = 181 kBtu/h
No minimum efficiency requirement applies
Cooling: 1 each - Hydronic Coil, Capacity = 174 kBtu/h, Air Economizer
No minimum efficiency requirement applies
Fan System: FAN SYSTEM 2 | AHU-3 -- Compliance (Brake HP method) : Passes

Fans:
FAN 3 Supply, Constant Volume, 6500 CFM, 7.5 motor nameplate hp, 7.1 brake hp

FAN 4 Exhaust, Constant Volume, 6500 CFM, 1.5 motor nameplate hp, 1.2 brake hp
Pressure Drop Credits:
Particulate filtration credit: MERV 9 through 12, 0.7867 credit
Particulate filtration credit: MERV 13 through 15, 1.4161 credit
Fully ducted return and/or exhaust air systems, 0.7867 credit

1 FC & CU-1,6,7 (Single Zone) :
Cooling: 1 each - Single Package DX Unit, Capacity = 34 kBtu/h, Air-Cooled Condenser, Air Economizer
Proposed Efficiency = 14.00 SEER, Required Efficiency = 13.00 SEER
Fan System: None

1 FC & CU-2,3 (Single Zone) :
Cooling: 1 each - Single Package DX Unit, Capacity = 30 kBtu/h, Air-Cooled Condenser, Air Economizer
Proposed Efficiency = 15.00 SEER, Required Efficiency = 13.00 SEER
Fan System: None

1 FC & CU-4,5 (Single Zone) :
Cooling: 1 each - Single Package DX Unit, Capacity = 24 kBtu/h, Air-Cooled Condenser, Air Economizer
Proposed Efficiency = 17.00 SEER, Required Efficiency = 13.00 SEER
Fan System: None

1 FC & CU-8 (Single Zone) :
Cooling: 1 each - Single Package DX Unit, Capacity = 141 kBtu/h, Air-Cooled Condenser, Air Economizer
Proposed Efficiency = 11.00 EER, Required Efficiency = 11.00 EER
Fan System: None

1 MUA-1 (Single Zone) :
Cooling: 1 each - Hydronic Coil, Capacity = 1058 kBtu/h, Air Economizer
No minimum efficiency requirement applies
Fan System: FAN SYSTEM 3 | MUA-1 -- Compliance (Motor nameplate HP method) : Passes

Fans:
FAN 5 Supply, Constant Volume, 15000 CFM, 10.0 motor nameplate hp

1 BC-1 (Single Zone) :
Heating: 1 each - Hydronic or Steam Coil, Hot Water, Capacity = 31 kBtu/h
No minimum efficiency requirement applies
Cooling: 1 each - Hydronic Coil, Capacity = 25 kBtu/h, No Economizer, Economizer exception: None
No minimum efficiency requirement applies
Fan System: FAN SYSTEM 4 | BC-1 -- Compliance (Motor nameplate HP method) : Passes

Fans:
FAN 6 Supply, Constant Volume, 800 CFM, 0.3 motor nameplate hp

1 BC-2,3 (Single Zone) :
Heating: 1 each - Hydronic or Steam Coil, Hot Water, Capacity = 44 kBtu/h
No minimum efficiency requirement applies
Cooling: 1 each - Hydronic Coil, Capacity = 26 kBtu/h, No Economizer, Economizer exception: None
No minimum efficiency requirement applies
Fan System: FAN SYSTEM 5 | BC-2 & 3 -- Compliance (Motor nameplate HP method) : Passes

Fans:
FAN 7 Supply, Constant Volume, 1300 CFM, 0.5 motor nameplate hp

1 BC-4 (Single Zone) :
Heating: 1 each - Hydronic or Steam Coil, Hot Water, Capacity = 44 kBtu/h
No minimum efficiency requirement applies
Cooling: 1 each - Hydronic Coil, Capacity = 29 kBtu/h, No Economizer, Economizer exception: None
No minimum efficiency requirement applies
Fan System: FAN SYSTEM 6 | BC-4 -- Compliance (Motor nameplate HP method) : Passes

Fans:
FAN 8 Supply, Constant Volume, 1210 CFM, 0.5 motor nameplate hp

1 BC-5 (Single Zone) :
Heating: 1 each - Hydronic or Steam Coil, Hot Water, Capacity = 40 kBtu/h
No minimum efficiency requirement applies
Cooling: 1 each - Hydronic Coil, Capacity = 24 kBtu/h, No Economizer, Economizer exception: None
No minimum efficiency requirement applies
Fan System: FAN SYSTEM 7 | BC-5 -- Compliance (Motor nameplate HP method) : Passes

Fans:
FAN 9 Supply, Constant Volume, 1050 CFM, 0.8 motor nameplate hp

1 BC-6 (Single Zone) :
Heating: 1 each - Hydronic or Steam Coil, Hot Water, Capacity = 80 kBtu/h
No minimum efficiency requirement applies
Cooling: 1 each - Hydronic Coil, Capacity = 32 kBtu/h, No Economizer, Economizer exception: None
No minimum efficiency requirement applies
Fan System: FAN SYSTEM 8 | BC-6 -- Compliance (Motor nameplate HP method) : Passes

Fans:
FAN 10 Supply, Constant Volume, 1350 CFM, 0.8 motor nameplate hp

Section 4: Requirements Checklist

Requirements Specific To: AHU-1 :

❑ 1. Balancing and pressure test connections on all hydronic terminal devices
❑ 2. Integrated economizer is required for this location and system.
❑ 3. Cooling system provides a means to relieve excess outdoor air during economizer operation.
❑ 4. Multiple boilers must have automatic controls that sequence operation with load
❑ 5. Single boiler >500 kBtu/h input capacity must have a multistaged or modulating burner
❑ 6. Two-pipe changeover heating/cooling controls must have:
a) 15 degrees F deadband where boiler and chiller can not operate,
b) allow operation in either heating or cooling for at least 4 hrs. and
c) prevent difference between heating and cooling set points greater than 30 degrees F
Exception(s):
❑ Air/evap condenser and extensive outside-air filtration
❑ 7. Meets the condenser heat recovery requirement for service water heating
Exception(s):
❑ Facilities that employ condenser heat recovery for space heating with a heat recovery design exceeding 30% of the peak water-cooled condenser load at design conditions.
❑ Facilities that provide 60% of their service water heating from site solar or site recovered energy or from other sources.
❑ 8. Chilled water pumping systems with multiple chillers must automatically reduce chilled water flow rates proportionately when chillers are not operating
❑ 9. Hot water pumping systems with multiple boilers automatically reduce hot water flow rates proportionately when boilers are not operating

Requirements Specific To: AHU-2 :

❑ 1. Balancing and pressure test connections on all hydronic terminal devices
❑ 2. Integrated economizer is required for this location and system.
❑ 3. Cooling system provides a means to relieve excess outdoor air during economizer operation.
❑ 4. Multiple boilers must have automatic controls that sequence operation with load
❑ 5. Single boiler >500 kBtu/h input capacity must have a multistaged or modulating burner
❑ 6. Two-pipe changeover heating/cooling controls must have:
a) 15 degrees F deadband where boiler and chiller can not operate,
b) allow operation in either heating or cooling for at least 4 hrs. and
c) prevent difference between heating and cooling set points greater than 30 degrees F
Exception(s):
❑ Air/evap condenser and extensive outside-air filtration
❑ 7. Meets the condenser heat recovery requirement for service water heating
Exception(s):
❑ Facilities that employ condenser heat recovery for space heating with a heat recovery design exceeding 30% of the peak water-cooled condenser load at design conditions.
❑ Facilities that provide 60% of their service water heating from site solar or site recovered energy or from other sources.
❑ 8. Chilled water pumping systems with multiple chillers must automatically reduce chilled water flow rates proportionately when chillers are not operating
❑ 9. Hot water pumping systems with multiple boilers automatically reduce hot water flow rates proportionately when boilers are not operating

Requirements Specific To: AHU-3 :

❑ 1. Balancing and pressure test connections on all hydronic terminal devices
❑ 2. Integrated economizer is required for this location and system.
❑ 3. Cooling system provides a means to relieve excess outdoor air during economizer operation.
❑ 4. Multiple boilers must have automatic controls that sequence operation with load
❑ 5. Single boiler >500 kBtu/h input capacity must have a multistaged or modulating burner
❑ 6. Two-pipe changeover heating/cooling controls must have:
a) 15 degrees F deadband where boiler and chiller can not operate,
b) allow operation in either heating or cooling for at least 4 hrs. and
c) prevent difference between heating and cooling set points greater than 30 degrees F
Exception(s):
❑ Air/evap condenser and extensive outside-air filtration
❑ 7. Meets the condenser heat recovery requirement for service water heating
Exception(s):
❑ Facilities that employ condenser heat recovery for space heating with a heat recovery design exceeding 30% of the peak water-cooled condenser load at design conditions.
❑ Facilities that provide 60% of their service water heating from site solar or site recovered energy or from other sources.
❑ 8. Chilled water pumping systems with multiple chillers must automatically reduce chilled water flow rates proportionately when chillers are not operating
❑ 9. Hot water pumping systems with multiple boilers automatically reduce hot water flow rates proportionately when boilers are not operating

Requirements Specific To: FC & CU-1,6,7 :

❑ 1. Equipment minimum efficiency: Single Package Unit: 13.00 SEER

Requirements Specific To: FC & CU-2,3 :

❑ 1. Equipment minimum efficiency: Single Package Unit: 13.00 SEER

Requirements Specific To: FC & CU-4,5 :

❑ 1. Equipment minimum efficiency: Single Package Unit: 13.00 SEER

Requirements Specific To: FC & CU-8 :

❑ 1. Equipment minimum efficiency: Single Package Unit: 11.00 EER
❑ 2. Integrated economizer is required for this location and system.
❑ 3. Cooling system provides a means to relieve excess outdoor air during economizer operation.
❑ 4. Hot gas bypass prohibited unless system has multiple steps of unloading or continuous capacity modulation
❑ 5. Hot gas bypass limited to 50% of total cooling capacity

Requirements Specific To: MUA-1 :

❑ 1. Discharge dampers prohibited with fan motors > 25 hp
❑ 2. Balancing and pressure test connections on all hydronic terminal devices
❑ 3. Integrated economizer is required for this location and system.
❑ 4. Cooling system provides a means to relieve excess outdoor air during economizer operation.
❑ 5. Meets the condenser heat recovery requirement for service water heating
Exception(s):
❑ Facilities that employ condenser heat recovery for space heating with a heat recovery design exceeding 30% of the peak water-cooled condenser load at design conditions.
❑ Facilities that provide 60% of their service water heating from site solar or site recovered energy or from other sources.
❑ 6. Chilled water pumping systems with multiple chillers must automatically reduce chilled water flow rates proportionately when chillers are not operating

Requirements Specific To: BC-1 :

❑ 1. Balancing and pressure test connections on all hydronic terminal devices
❑ 2. Multiple boilers must have automatic controls that sequence operation with load
❑ 3. Single boiler >500 kBtu/h input capacity must have a multistaged or modulating burner
❑ 4. Two-pipe changeover heating/cooling controls must have:
a) 15 degrees F deadband where boiler and chiller can not operate,
b) allow operation in either heating or cooling for at least 4 hrs. and
c) prevent difference between heating and cooling set points greater than 30 degrees F
Exception(s):
❑ Air/evap condenser and extensive outside-air filtration
❑ 5. Meets the condenser heat recovery requirement for service water heating
Exception(s):
❑ Facilities that employ condenser heat recovery for space heating with a heat recovery design exceeding 30% of the peak water-cooled condenser load at design conditions.
❑ Facilities that provide 60% of their service water heating from site solar or site recovered energy or from other sources.
❑ 6. Chilled water pumping systems with multiple chillers must automatically reduce chilled water flow rates proportionately when chillers are not operating
❑ 7. Hot water pumping systems with multiple boilers automatically reduce hot water flow rates proportionately when boilers are not operating

Requirements Specific To: BC-2,3 :

❑ 1. Balancing and pressure test connections on all hydronic terminal devices
❑ 2. Multiple boilers must have automatic controls that sequence operation with load
❑ 3. Single boiler >500 kBtu/h input capacity must have a multistaged or modulating burner
❑ 4. Two-pipe changeover heating/cooling controls must have:
a) 15 degrees F deadband where boiler and chiller can not operate,
b) allow operation in either heating or cooling for at least 4 hrs. and
c) prevent difference between heating and cooling set points greater than 30 degrees F
Exception(s):
❑ Air/evap condenser and extensive outside-air filtration
❑ 5. Meets the condenser heat recovery requirement for service water heating
Exception(s):
❑ Facilities that employ condenser heat recovery for space heating with a heat recovery design exceeding 30% of the peak water-cooled condenser load at design conditions.
❑ Facilities that provide 60% of their service water heating from site solar or site recovered energy or from other sources.
❑ 6. Chilled water pumping systems with multiple chillers must automatically reduce chilled water flow rates proportionately when chillers are not operating
❑ 7. Hot water pumping systems with multiple boilers automatically reduce hot water flow rates proportionately when boilers are not operating

Requirements Specific To: BC-4 :

❑ 1. Balancing and pressure test connections on all hydronic terminal devices
❑ 2. Multiple boilers must have automatic controls that sequence operation with load
❑ 3. Single boiler >500 kBtu/h input capacity must have a multistaged or modulating burner
❑ 4. Two-pipe changeover heating/cooling controls must have:
a) 15 degrees F deadband where boiler and chiller can not operate,
b) allow operation in either heating or cooling for at least 4 hrs. and
c) prevent difference between heating and cooling set points greater than 30 degrees F
Exception(s):
❑ Air/evap condenser and extensive outside-air filtration
❑ 5. Meets the condenser heat recovery requirement for service water heating
Exception(s):
❑ Facilities that employ condenser heat recovery for space heating with a heat recovery design exceeding 30% of the peak water-cooled condenser load at design conditions.
❑ Facilities that provide 60% of their service water heating from site solar or site recovered energy or from other sources.
❑ 6. Chilled water pumping systems with multiple chillers must automatically reduce chilled water flow rates proportionately when chillers are not operating
❑ 7. Hot water pumping systems with multiple boilers automatically reduce hot water flow rates proportionately when boilers are not operating

Requirements Specific To: BC-5 :

❑ 1. Balancing and pressure test connections on all hydronic terminal devices
❑ 2. Multiple boilers must have automatic controls that sequence operation with load
❑ 3. Single boiler >500 kBtu/h input capacity must have a multistaged or modulating burner
❑ 4. Two-pipe changeover heating/cooling controls must have:
a) 15 degrees F deadband where boiler and chiller can not operate,
b) allow operation in either heating or cooling for at least 4 hrs. and
c) prevent difference between heating and cooling set points greater than 30 degrees F
Exception(s):
❑ Air/evap condenser and extensive outside-air filtration
❑ 5. Meets the condenser heat recovery requirement for service water heating
Exception(s):
❑ Facilities that employ condenser heat recovery for space heating with a heat recovery design exceeding 30% of the peak water-cooled condenser load at design conditions.
❑ Facilities that provide 60% of their service water heating from site solar or site recovered energy or from other sources.
❑ 6. Chilled water pumping systems with multiple chillers must automatically reduce chilled water flow rates proportionately when chillers are not operating
❑ 7. Hot water pumping systems with multiple boilers automatically reduce hot water flow rates proportionately when boilers are not operating

Requirements Specific To: BC-6 :

❑ 1. Balancing and pressure test connections on all hydronic terminal devices
❑ 2. Multiple boilers must have automatic controls that sequence operation with load
❑ 3. Single boiler >500 kBtu/h input capacity must have a multistaged or modulating burner
❑ 4. Two-pipe changeover heating/cooling controls must have:
a) 15 degrees F deadband where boiler and chiller can not operate,
b) allow operation in either heating or cooling for at least 4 hrs. and
c) prevent difference between heating and cooling set points greater than 30 degrees F
Exception(s):
❑ Air/evap condenser and extensive outside-air filtration
❑ 5. Meets the condenser heat recovery requirement for service water heating
Exception(s):
❑ Facilities that employ condenser heat recovery for space heating with a heat recovery design exceeding 30% of the peak water-cooled condenser load at design conditions.
❑ Facilities that provide 60% of their service water heating from site solar or site recovered energy or from other sources.
❑ 6. Chilled water pumping systems with multiple chillers must automatically reduce chilled water flow rates proportionately when chillers are not operating
❑ 7. Hot water pumping systems with multiple boilers automatically reduce hot water flow rates proportionately when boilers are not operating

Generic Requirements: Must be met by all systems to which the requirement is applicable:

❑ 1. Plant equipment and system capacity no greater than needed to meet loads
Exception(s):
❑ Standby equipment automatically off when primary system is operating
❑ Multiple units controlled to sequence operation as a function of load
❑ 2. Minimum one temperature control device per system
❑ 3. Minimum one humidity control device per installed humidification/dehumidification system
❑ 4. Load calculations per ASHRAE/ACCA Standard 183.
❑ 5. Automatic Controls: Setback to 55°F (heat) and 85°F (cool); 7-day clock, 2-hour occupant override, 10-hour backup
Exception(s):
❑ Continuously operating zones
❑ 6. Outside-air source for ventilation; system capable of reducing OSA to required minimum
❑ 7. R-5 supply and return air duct insulation in unconditioned spaces
R-8 supply and return air duct insulation outside the building
R-8 insulation between ducts and the building exterior when ducts are part of a building assembly
Exception(s):
❑ Ducts located within equipment
❑ Ducts with interior and exterior temperature difference not exceeding 15°F.
❑ 8. Mechanical fasteners and sealants used to connect ducts and air distribution equipment
❑ 9. Ducts sealed - longitudinal seams on rigid ducts; transverse seams on all ducts; UL 181A or 181B tapes and mastics
❑ 10. Hot water pipe insulation: 1.5 in. for pipes <=1.5 in. and 2 in. for pipes >1.5 in.
Chilled water/refrigerant/brine pipe insulation: 1.5 in. for pipes <=1.5 in. and 1.5 in. for pipes >1.5 in.
Steam pipe insulation: 1.5 in. for pipes <=1.5 in. and 3 in. for pipes >1.5 in.
Exception(s):
❑ Piping within HVAC equipment.
❑ Fluid temperatures between 55 and 105°F.
❑ Fluid not heated or cooled with renewable energy.
❑ Piping within room fan-coil (with AHRI440 rating) and unit ventilators (with AHRI840 rating).
❑ Runouts <4 ft in length.
❑ 11. Operation and maintenance manual provided to building owner
❑ 12. Thermostatic controls have 5°F deadband
Exception(s):
❑ Thermostats requiring manual changeover between heating and cooling
❑ Special occupancy or special applications where wide temperature ranges are not acceptable and are approved by the authority having jurisdiction.
❑ 13. Balancing devices provided in accordance with IMC 603.17
❑ 14. Demand control ventilation (DCV) present for high design occupancy areas (>40 person/1000 ft2 in spaces >500 ft2) and served by systems with any one of 1) an air-side economizer, 2) automatic modulating control of the outdoor air damper, or 3) a design outdoor airflow greater than 3000 cfm.
Exception(s):
❑ Systems with heat recovery.
❑ Multiple-zone systems without DDC of individual zones communicating with a central control panel.
❑ Systems with a design outdoor airflow less than 1200 cfm.
❑ Spaces where the supply airflow rate minus any makeup or outgoing transfer air requirement is less than 1200 cfm.
❑ 15. Motorized, automatic shutoff dampers required on exhaust and outdoor air supply openings
Exception(s):
❑ Gravity dampers acceptable in buildings <3 stories
❑ 16. Automatic controls for freeze protection systems present
❑ 17. Three-pipe systems not used
❑ 18. Exhaust air heat recovery included for systems 5,000 cfm or greater with more than 70% outside air fraction or specifically exempted
Exception(s):
❑ Hazardous exhaust systems, commercial kitchen and clothes dryer exhaust systems that the International Mechanical Code prohibits the use of energy recovery systems.
❑ Systems serving spaces that are heated and not cooled to less than 60°F.
❑ Where more than 60 percent of the outdoor heating energy is provided from site-recovered or site solar energy.
❑ Heating systems in climates with less than 3600 HDD.
❑ Cooling systems in climates with a 1 percent cooling design wet-bulb temperature less than 64°F.
❑ Systems requiring dehumidification that employ energy recovery in series with the cooling coil.
❑ Laboratory fume hood exhaust systems that have either a variable air volume system capable of reducing exhaust and makeup air volume to 50 percent or less of design values or, a separate make up air supply meeting the following makeup air requirements: a) at least 75 percent of exhaust flow rate, b) heated to no more than 2°F below room setpoint temperature, c) cooled to no lower than 3°F above room setpoint temperature, d) no humidification added, e) no simultaneous heating and cooling.

Section 5: Compliance Statement

Compliance Statement: The proposed mechanical design represented in this document is consistent with the building plans, specifications and other calculations submitted with this permit application. The proposed mechanical systems have been designed to meet the 2009 IECC requirements in COM*check* Version 4.0.2.9 and to comply with the mandatory requirements in the Requirements Checklist.

Name - Title ____________ Signature ____________ Date ____________

EQUIPMENT TAG: ECU-1, ECU-2, ECU-3, MUA-1

AIR CONDITIONING LOADS AND OUTSIDE AIR CALCULATIONS USING ASHRAE 62-2007

ROOM NUMBER/NAME	NUMBER OF UNITS (PERSONS, FIXTURE, AREA)	UNITS (PEOPLE, UNITS, SQUARE FEET)	CFM/UNIT OF O.A.	TOT O.A. CFM	Qs (Heating)	CFM Heating	Qs (Cooling)	CFM COOLING	COOL CFM	HEAT CFM	Z
BAGGAGE MAKE-UP AREA	15200	SF	0.12	1824	71500	4271	295000	47486	48000	15000	0.12
TOTALS				1824		4271	295000	47486	48000	15000	0.12
											Z CRITICAL

EVAPORATIVE AIR CALC		
CELDEK EFFICIEENCY	E=	88.0 %
OUTSIDE AIR DB TEMP	105.0	
OUTSIDE AIR WB TEMP	69.0	
LAT = DBT-E/100(DB-WB)	73.32	
DT=80-LAT	6.68	

	T DB	T wb	CFM	%
Return air	72.0		12650.00	0.84
Supply air (Heating)	90.0		15000.00	
Outside Air (Winter)	20.0		2350.00	0.16
Outside air (Summe	105.0	69.0	48000.00	1.00
Altitude	4000	FT		

HEATING OUTPUT CALCULATIONS

WINTER MIXED AIR TEMP. (DB) 63.9 F (DB)
HEATING SUPPLY AIR TEMP. (DB) 90.0 F (DB)
qs (input) = 364,746 Btuh

X = TOTAL OA / LOAD CFM 0.12
Y = Vot / Vst CORRECTED FRACTION
Y = X / 1+X-Z 0.12

OA CORRECTED AIRFLOW = 1824.00 CFM
GENERAL EXHAUST AIRFLOW 0.00 CFM **(Input Restroom Exh. etc)**
MAKE UP FOR EXHAUST REQUIRED 0.00 CFM
(Includes an additional 10% for pressurization)
MIN. OUTSIDE AIRFLOW 2350.00 CFM

EQUIPMENT TAG: Temporary Split System

OUTSIDE AIR CALCULATIONS USING ASHRAE 62-2007 FOR MULTIPLE ZONE SYSTEMS

ROOM NUMBER/NAME	OCCUPANCY CATEGORY (TABLE 6-1)	NUMBER OF PEOPLE P(z)	ZONE FLOOR AREA (S.F.) A(z)	PEOPLE OUTDOOR RATE (CFM/PERS) (TABLE 6-1) R(p)	AREA OUTDOOR RATE (CFM/S.F.) (TABLE 6-1) R(a)	R(p)P(z)	R(a)A(z)	BREATHING ZONE OUTDOOR AIRFLOW (CFM) V(bz) = R(p)P(z) + R(a)A(z)	ZONE DISTRIBUTION EFFECTIVENESS E(z) (TABLE 6-2)	COOLING ZONE OUTDOOR AIR RATE V(oz) = V(bz)/E(z) (CFM)	COOLING Qs	COOLING dT	CALCULATED COOLING AIRFLOW (CFM)	DESIGN COOLING PRIMARY AIRFLOW V(p) (CFM)	COOLING ZONE OUTDOOR RATIO Z(p) Z(p) = V(oz)/V(pz)
Temporary Baggage Inspection	Multi-use Assembly	10	3555	7.5	0.06	75	213.3	288.3	0.8	360.375	110100	19	6,231	6250	0.06
TOTALS		10				75	213.3	288.3					6231	6250	0.06
														Max Z(p)	0.06

		System Ventilation Efficiency 0.15<Z(p)<0.55	E(v)
COOLING MAXIMUM OUTDOOR RATIO (Max Z(p))	0.06	1	1.0

If Z(p) Exceeds 0.55; Use Appendix A of the Standard
If Z(p) is 0.15 or less System Ventilation Efficiency is 1.0.
System Population [P(s)] 4
Occupant Diversity (Equation 6-7) 0.4 D = P(s)/Sum all zones (P(z)

	T DB	T wb	RH %	CFM	FRACTION
Return air (Cooling)	72.0	59.4	49.82	5950	0.95
Supply air (Cooling)	53.0	52.0	94.10	6250	
Supply air (Heating)	90.0			6250	
Outside Air (Heating)	20.0			300	0.05
Outside air (Cooling)	105.0	69.0	17.06	300	0.05
O.A. (De-humidification)	80	79	95.89	300	0.05
Altitude	4000	FT			

V(ou) = Uncorrected Outdoor Air Intake 243.3 Equation 6-6 V(ou) = D (Sum all zones R(p)P(z)) + Sum all zones R(a)A(z)

Corrected Outdoor Air Rate V(ot)
COOLING V(ot) = Outdoor Air Intake Fraction 243 Equation 6-8 V(ot) = V(ou)/E(v)

IEQ CR2 INCREASED CLG VENT (10%) 268

GENERAL EXHAUST AIRFLOW 0
MAKE UP AIR FOR EXHAUST REQUIRED 0
COOLING VENTILATION RATE 300

COOLING COIL CALCULATIONS

SUMMER MIXED AIR TEMP. (DB/WB)	73.6 F (DB)	59.8 F (WB)
COOLING SUPPLY AIR TEMP. (DB/WB)	53.0 F (DB)	52.0 F (WB)
ENTHALPY OF MIXED AIR (COOLING)	28.1 Btu/Lb Dry Air (From Psych. Chart)	
ENTHALPY OF SUPPLY AIR (COOLING)	22.8 Btu/Lb Dry Air (From Psych. Chart)	
qs (coil) =	119645	Btuh
q Tot (coil)=	130790	Btuh
AIRFLOW	6250	CFM
CONDENSATE	-0.01	GPM

HEATING CALCULATIONS (INPUT)

WINTER MIXED AIR TEMP. (DB) 69.5 F (DB)
HEATING SUPPLY AIR TEMP. (DB) 90.0 F (DB)

qs (coil) =	119,133	Btuh
AIRFLOW	6250	CFM

Single Zone Systems
V(ot) = Outdoor Air Intake flow
V(ot) = V(oz)

100% Outdoor Air Systems
V(ot) = Sum all zones V(oz)

TEXAS REGISTRATION: F-000014
Alegro Engineering
Consulting Engineers
5822 Cromo Dr. Suite 105
El Paso, Texas 79912
Tel. 915.533.0700

REFERENCES -- BENCHMARK

DATE	REVISIONS	BY

CONSULTANT'S NAME
mijares mora
A R C H I T E C T S I N C.
111 N. FESTIVAL
TEL: 915-542-1591
EL PASO, TEXAS 79912
FAX: 542-1594

ARCHITECT'S SEAL
STATE OF TEXAS
ROLANDO LEGARRETA
84714
LICENSED
PROFESSIONAL ENGINEER

ALTERATION OF A SEALED DOCUMENT WITHOUT PROPER NOTIFICATION TO THE RESPONSIBLE ENGINEER IS AN OFFENSE UNDER THE TEXAS ENGINEERING PRACTICE ACT.

SCALE
DATE MAY 2016
DESIGN BY ALEGRO
DRAWN BY GAG
CHKD. BY GAG
APPD. BY RL
JOB NO. 14-154

PROJECT NAME
EL PASO INTERNATIONAL AIRPORT CHECKED BAGGAGE INSPECTION SYSTEM
6701 CONVAIR RD. EL PASO, TEXAS

EL PASO INTERNATIONAL AIRPORT

CITY OF EL PASO

SHEET TITLE
MECHANICAL CALCULATIONS AND ENERGY REPORT

M0.05

FILE NO. □□□□
SHEET □ OF 3□

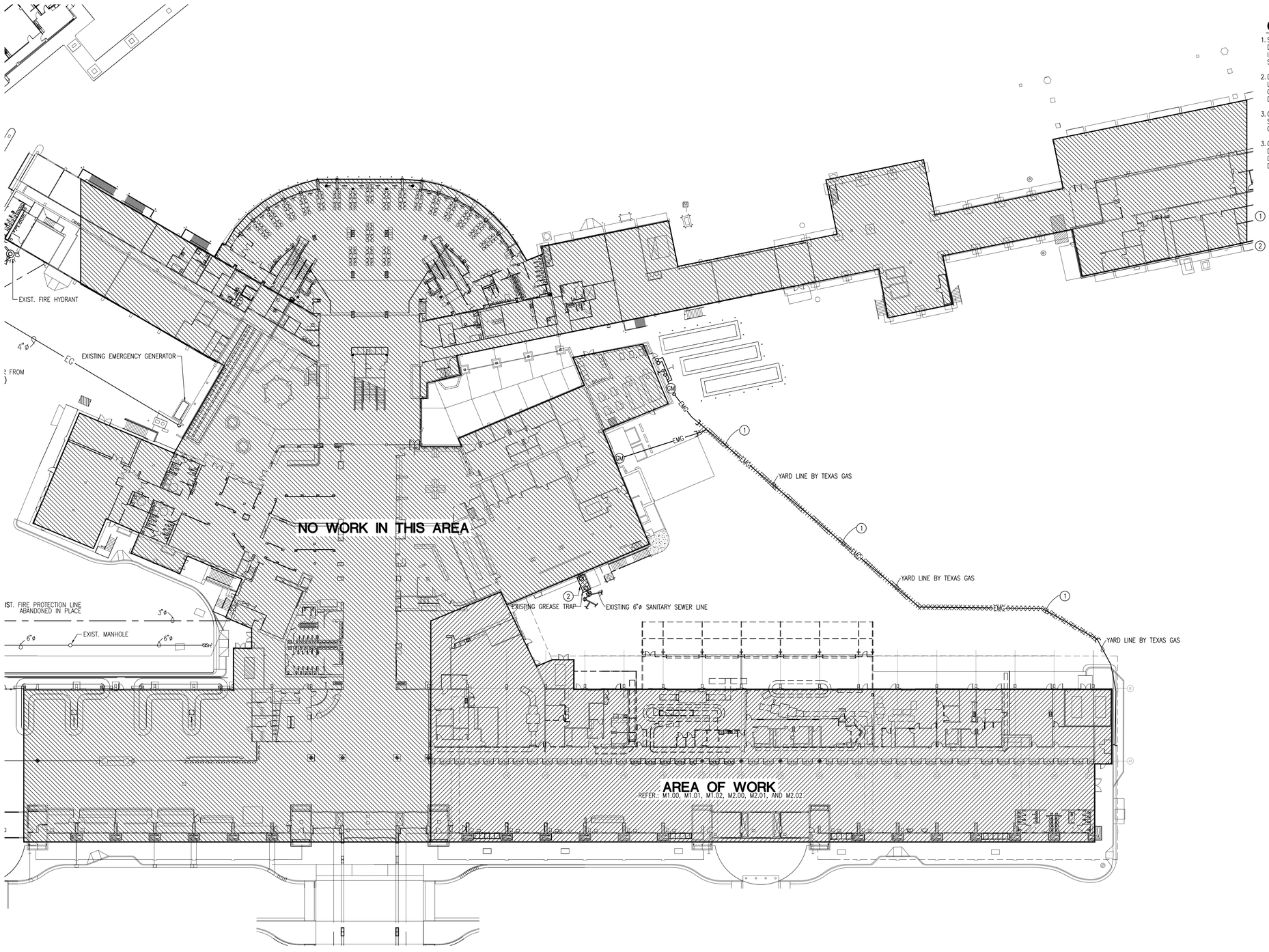

N 1 **PARTIAL DEMOLITION SITE PLAN**
SCALE:1"=30'

GENERAL NOTES:

1. SITE UTILITIES SHOWN ON DRAWINGS WERE OBTAINED FROM EXISTING DRAWINGS AND PROVIDED BY OTHERS AND HAVE NOT BEEN VERIFIED IN THEIR ENTIRETY. CONTRACTOR TO COORDINATE SITE UTILITIES ON SITE AND WITH CIVIL DRAWINGS.
2. DUE TO POSSIBLE COMPLICATIONS DUE TO UNFORESEEN UTILITY LOCATIONS; CONTRACTOR SHALL FIELD VERIFY ALL UTILITIES BEFORE COMMENCING ANY WORK. EXPOSING OF EXISTING UTILITIES SHALL BE DONE WITH SHOVELS.
3. GAS YARD LINE RE-ROUTING TO BE COORDINATED WITH TEXAS GAS TO SHUT DOWN GAS SERVICE AT NIGHT ONLY. OWNER CANNOT BE LEFT WITHOUT GAS SERVICE DURING HOURS OF OPERATION.
3. GREASE TRAP RELOCATION TO BE COORDINATED TO RUN NEW GREASE LINE BEFORE DISCONNECTING GREASE TRAP. CONTRACTOR TO COORDINATE INSTALLED TO HAVE DOWNTIME AT NIGHT ONLY. OWNER CANNOT BE LEFT WITHOUT GREASE WASTE SYSTEM DURING HOURS OF OPERATION.

DEMOLITON NOTES:

1. CONTRACTOR TO COORDINATE RE-ROUTING OF EXISTING GAS LINE WITH TEXAS GAS AT BEGINNING OF PROJECT BEFORE COMMENCING ANY WORK. WORK FOR YARD LINE RE-ROUTING TO BE PERFORMED BY TEXAS GAS.
2. EXISTING GREASE TRAP TO BE REMOVED IN ITS ENTIRETY AND TO BE PROPERLY DISPOSED OF BY CONTRACTOR. REFER TO NEW WORK FOR NEW LOCATION OF NEW GREASE TRAP

TEXAS REGISTRATION: F-000014
Alegro Engineering
Consulting Engineers
5822 Cromo Dr. Suite 105
El Paso, Texas 79912
Tel. 915.533.0700

ALTERATION OF A SEALED DOCUMENT WITHOUT THE PERMISSION OF THE RESPONSIBLE ENGINEER IS AN OFFENSE UNDER THE TEXAS ENGINEERING PRACTICE ACT.

REFERENCES -- BENCHMARK

DATE	REVISIONS	BY

CONSULTANT'S NAME
mijares ● mora
ARCHITECTS INC.
EL PASO, TEXAS 79912
111 N. FESTIVAL
TEL: 915-542-1991 FAX: 542-1994

ARCHITECT'S SEAL
STATE OF TEXAS
ROLANDO LEGARRETA
84714
LICENSED PROFESSIONAL ENGINEER
5/24/16

SCALE

DATE	MAY 2016
DESIGN BY	AEGRO
DRAWN BY	GAG
CHKD. BY	GAG
APPD. BY	RL
JOB NO.	14-154

PROJECT NAME
EL PASO INTERNATIONAL AIRPORT
CHECKED BAGGAGE INSPECTION SYSTEM
6701 CONVAR RD. EL PASO, TEXAS

EL PASO INTERNATIONAL AIRPORT

CITY OF EL PASO

SHEET TITLE
DEMOLITION SITE PLAN

M1.00
FILE NO. XXXX

SHEET 7 OF 34

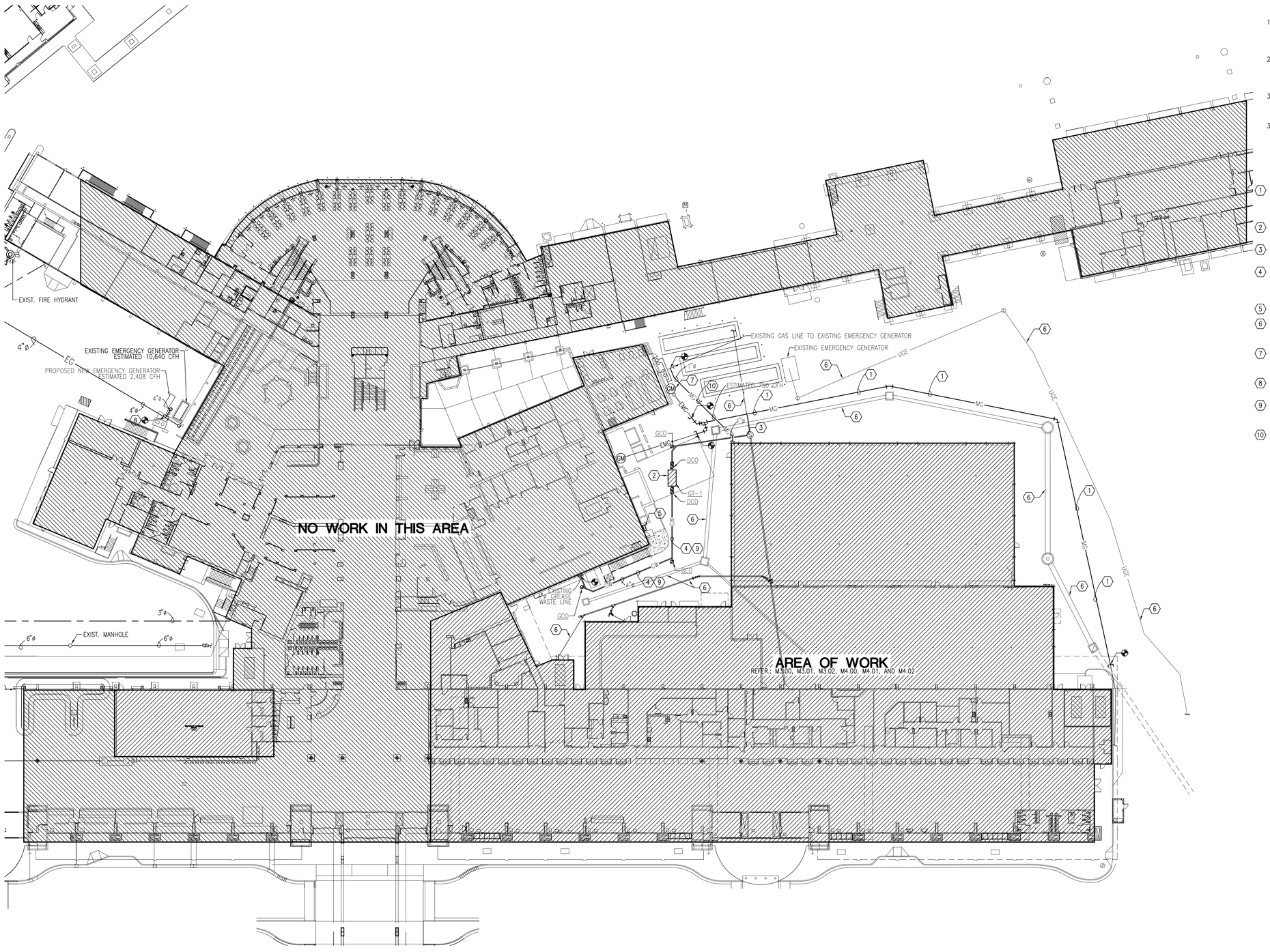

N 1 **PARTIAL SITE PLAN**
SCALE: 1" = 30'

GENERAL NOTES:

1. SITE UTILITIES SHOWN ON DRAWINGS WERE OBTAINED FROM EXISTING DRAWINGS AND PROVIDED BY OTHERS AND HAVE NOT BEEN VERIFIED IN THEIR ENTIRETY. CONTRACTOR TO COORDINATE SITE UTILITIES ON SITE AND WITH CIVIL DRAWINGS.
2. DUE TO POSSIBLE COMPLICATIONS DUE TO UNFORESEEN UTILITY LOCATIONS; CONTRACTOR SHALL FIELD VERIFY ALL UTILITIES BEFORE COMMENCING ANY WORK. EXPOSING OF EXISTING UTILITIES SHALL BE DONE WITH SHOVELS.
3. GAS YARD LINE RE-ROUTING TO BE COORDINATED WITH TEXAS GAS TO SHUT DOWN GAS SERVICE AT NIGHT ONLY. OWNER CANNOT BE LEFT WITHOUT GAS SERVICE DURING HOURS OF OPERATION.
3. GREASE TRAP RELOCATION TO BE COORDINATED TO RUN NEW GREASE LINE BEFORE DISCONNECTING GREASE TRAP. CONTRACTOR TO COORDINATE INSTALLED TO HAVE DOWNTIME AT NIGHT ONLY. OWNER CANNOT BE LEFT WITHOUT GREASE WASTE SYSTEM DURING HOURS OF OPERATION.

KEYED NOTES:

1. NEW PROPOSED ROUTING OF TEXAS GAS YARD LINE. CONTRACTOR TO COORDINATE ROUTING WORK TEXAS GAS AT THE BEGINNING OF THE PROJECT BEFORE COMMENCING ANY WORK. FINAL ROUTING OF GAS LINE TO BE COORDINATED ON SITE AND WITH CIVIL ENGINEER. RE-ROUTING OF YARD LINE TO BE PERFORMED BY TEXAS GAS.
2. NEW PROPOSED LOCATION OF GT-1 CONTRACTOR TO COORDINATE FINAL LOCATION ON SITE AND WITH CIVIL ENGINEER.
3. EXTEND AND CONNECT NEW 4"ø SANITARY SEWER LINE TO NEW RE-ROUTED SEWER LINE REFER TO CIVIL DRAWINGS FOR LOCATION OF NEW RE-ROUTED SEWER LINE.
4. PROVIDE AND INSTALL HEAT TRACE SYSTEM FOR GREASE LINE TEMPERATURE MAINTENANCE HEAT TRACE SYSTEM TO BE RAYCHEM XL-TRACE SYSTEM MODEL # 8XL1-CT AT 8 WATTS PER FOOT WITH 120/1. PROVIDE WITH ELECTRONIC TEMPERATURE CONTROL SYSTEM WITH LINE SENSING RAYCHEM MODEL C910-485.
5. PROPOSED LOCATION FOR HEAT TRACE TEMPERATURE CONTROL SYSTEM WITH LINE SENSING
6. SANITARY SEWER, STORM SEWER, UNDERGROUND ELECTRICAL, AND DOMESTIC WATER LINES ARE SHOWN FOR REFERENCE ONLY, REFER TO CIVIL DRAWINGS FOR FINAL LOCATIONS OF UTILITIES.
7. CONTRACTOR TO COORDINATE WITH TEXAS GAS AT THE BEGINNING OF THE PROJECT TO UPSIZING OF THE EXISTING GAS METER. REFER TO GAS LOAD CALCULATIONS FOR NEW GAS LOAD DEMAND.
8. EXTEND AND CONNECT NEW 4"ø GAS LINE FROM NEW EMERGENCY GENERATOR TO EXISTING EXISTING 4"ø GAS LINE.
9. GREASE WASTE PIPING TO BE CAST IRON, HEAT TRACED, AND INSULATED WITH 2" FIBERGLASS INSULATION WITH JACKETING APPROVED FOR INSTALLATION BELOW GRADE.
10. MEDIUM PRESSURE GAS LINE SIZED BASED ON TABLE 7-9 OF THE 2006 ASPE PLUMBING ENGINEERING DESIGN HANDBOOK VOLUME 2 AT A DISTANCE OF 1000' FROM THE GAS METER TO THE FARTHEST PRESSURE REGULATOR.

TEXAS REGISTRATION: F-000014
Alegro Engineering
Consulting Engineers
5822 Cromo Dr, Suite 105
El Paso, Texas 79912
Tel. 915.533.0700

ALTERATION OF A SEALED DOCUMENT WITHOUT THE ENGINEER'S SEAL IS A VIOLATION OF THE ENGINEER IS AN OFFENSE UNDER THE TEXAS ENGINEERING PRACTICE ACT.

REFERENCES -- BENCHMARK

DATE	REVISIONS	BY

CONSULTANT'S NAME

mijares ● mora
ARCHITECTS INC.
EL PASO, TEXAS 79912
111 N. FESTIVAL
TEL: 915-542-1991
FAX: 542-1994

ARCHITECT'S SEAL

STATE OF TEXAS
ROLANDO LEGARRETA
84714
LICENSED
PROFESSIONAL ENGINEER
5/27/16

SCALE

DATE	MAY 2016
DESIGN BY	AEGRO
DRAWN BY	GAG
CHKD. BY	GAG
APPD. BY	RL
JOB NO.	14-154

PROJECT NAME

EL PASO INTERNATIONAL AIRPORT
CHECKED BAGGAGE INSPECTION SYSTEM
6701 CONVAIR RD. EL PASO, TEXAS

EL PASO INTERNATIONAL AIRPORT

CITY OF EL PASO

SHEET TITLE
PARTIAL SITE PLAN

M1.01
FILE NO. XXXX

SHEET 8 OF 34

GENERAL NOTES:

1. EXISTING DUCT/HYDRONIC PIPING ROUTING WAS OBTAINED BY EXISTING DRAWINGS AND HAVE NOT BEEN COMPLETELY VERIFIED. ANY DISCREPANCIES BETWEEN DRAWINGS AND ACTUAL SITE CONDITIONS TO BE BROUGHT TO THE ATTENTION OF THE ENGINEER OF RECORD IN WRITING.
2. KEYED NOTES ARE SHOWN ON PARTIAL PLANS.

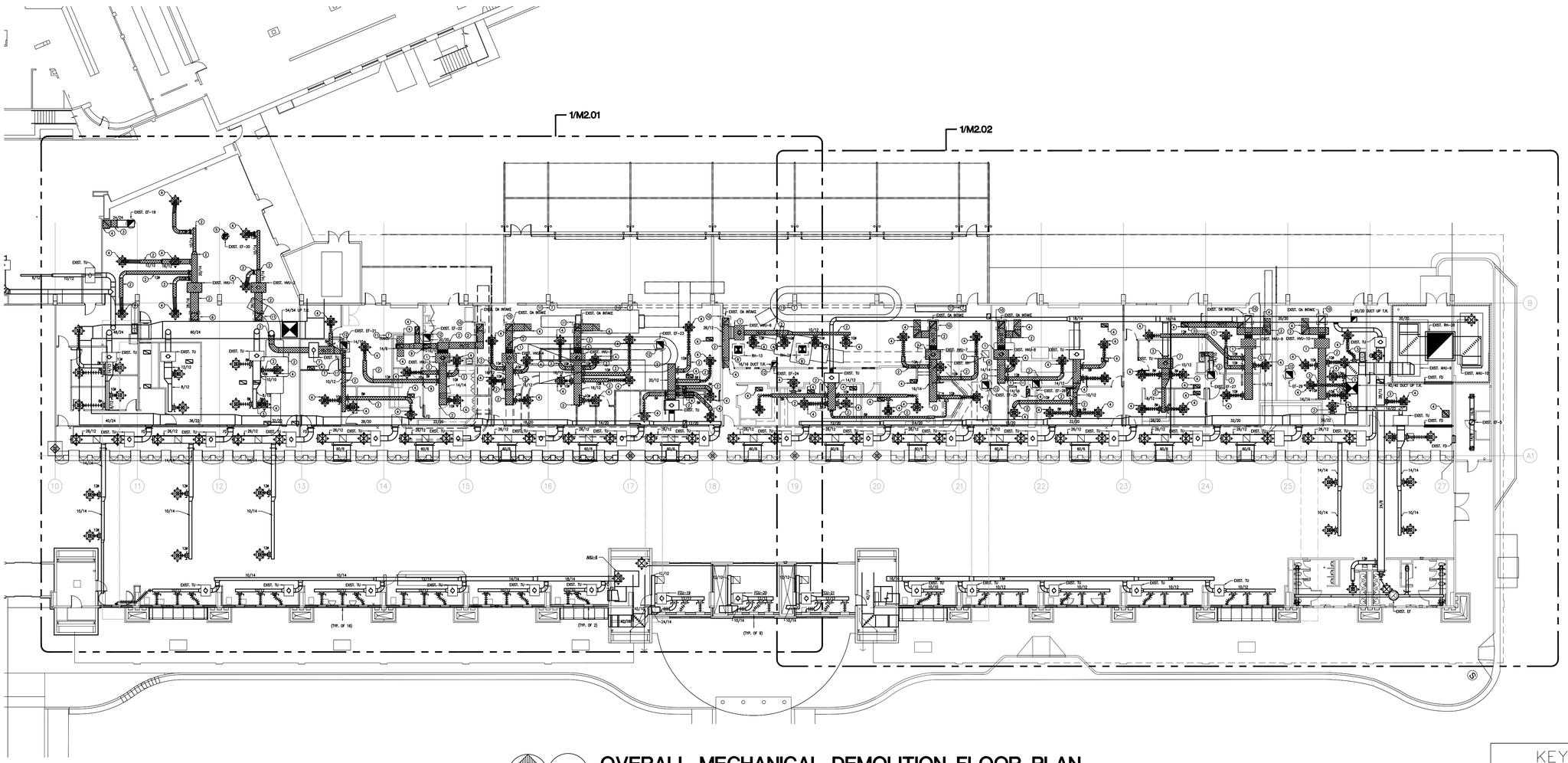

N 1 **OVERALL MECHANICAL DEMOLITION FLOOR PLAN**

SCALE:1/16"=1'-0"

16' 8' 0 16' 32'

SCALE: 1/16" = 1'

KEY PLAN

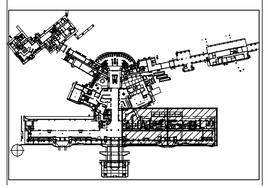

TEXAS REGISTRATION: F-0000

Alegro Engineering
Consulting Engineers
5822 Cromo Dr, Suite 105
El Paso, Texas 79912
Tel. 915.533.0700

ALTERATION OF A SEALED DOCUMENT WITHOUT PROPER AUTHORIZATION BY THE PROFESSIONAL ENGINEER IS AN OFFENSE UNDER THE TEXAS ENGINEERING PRACTICE ACT.

REFERENCES – BENCHMARK

DATE	REVISIONS	BY

CONSULTANT'S NAME

mijares mora
ARCHITECTS INC.
EL PASO, TEXAS 79912
111 N. FESTIVAL
TEL: 915-542-1984 FAX: 542-1981

ARCHITECT'S SEAL

STATE OF TEXAS
ROLANDO LEGARRETA
84714
LICENSED
PROFESSIONAL ENGINEER
5/27/16

SCALE

DATE	MAY 2016
DESIGN BY	ALEGRO
DRAWN BY	GAG
CHKD. BY	GAG
APPD. BY	RL
JOB NO.	14-154

PROJECT NAME

EL PASO INTERNATIONAL AIRPORT
CHECKED BAGGAGE INSPECTION SYSTEM

8701 CONVAIR RD. EL PASO, TEXAS

EL PASO INTERNATIONAL AIRPORT

CITY OF EL PASO

SHEET TITLE

OVERALL MECHANICAL DEMOLITION FLOOR PLAN

M2.00

FILE NO. □□□□

SHEET □ OF 3□

GENERAL NOTES:

1. EXISTING DUCT/HYDRONIC PIPING ROUTING WAS OBTAINED BY EXISTING DRAWINGS AND HAVE NOT BEEN COMPLETELY VERIFIED. ANY DISCREPANCIES BETWEEN DRAWINGS AND ACTUAL SITE CONDITIONS TO BE BROUGHT TO THE ATTENTION OF THE ENGINEER OF RECORD IN WRITING.

DEMOLITON NOTES:

1. EXISTING HEATING VENTILATING UNIT AND IT'S ACCESSORIES SHALL BE REMOVE IN ITS ENTIRETY.
2. EXISTING DUCTWORK SHALL BE REMOVED IN ITS ENTIRETY AS SHOWN.
3. EXISTING DUCTWORK WORK SHALL BE CUT, CAPPED, REMOVED AND MODIFIED AS SHOWN. REFER TO NEW WORK FOR CONTINUATION.
4. EXISTING AIR DEVICE(S) TO BE REMOVED IN ITS ENTIRETY.
5. EXISTING EXHAUST FAN SHALL BE REMOVED IN ITS ENTIRETY. CONTRACTOR SHALL PATCH ROOF OPENING TO PROVIDE A WATER TIGHT SEAL AND COMPLY WITH ANY REQUIREMENTS TO MAINTAIN ROOF WARRANTY.
6. EXISTING O.A. INTAKE SHALL BE REMOVED IN ITS ENTIRETY. CONTRACTOR SHALL PATCH ROOF OPENING TO PROVIDE A WATER TIGHT SEAL AND COMPLY WITH ANY REQUIREMENTS TO MAINTAIN ROOF WARRANTY.
7. EXISTING TU SHALL BE REMOVED, REFURBISHED, AND REUSED. REFER TO NEW WORK FOR CONTINUATION.
8. EXISTING RELIEF HOOD SHALL BE REMOVED IN ITS' ENTIRETY. CONTRACTOR SHALL PATCH ROOF OPENING TO PROVIDE A WATER TIGHT SEAL AND COMPLY WITH ANY REQUIREMENTS TO MAINTAIN ROOF WARRANTY.
9. EXISTING PENETRATION THROUGH FIRE RATED WALL SHALL BE PATCHED AND SEAL TO MAINTAIN FIRE RATING.
10. EXISTING O.A. INTAKE AND DUCT THROUGH ROOF TO REMAIN. REFER TO NEW WORK FOR CONTINUATION.
11. EXISTING T-STAT(S) SHALL BE REMOVED AS SHOWN.
12. EXISTING EXHAUST FAN SHALL REMAIN IN PLACE AND IN USE. EXISTING DUCTWORK SERVING EXISTING EXHAUST FAN TO BE REMOVED IN ITS ENTIRETY.

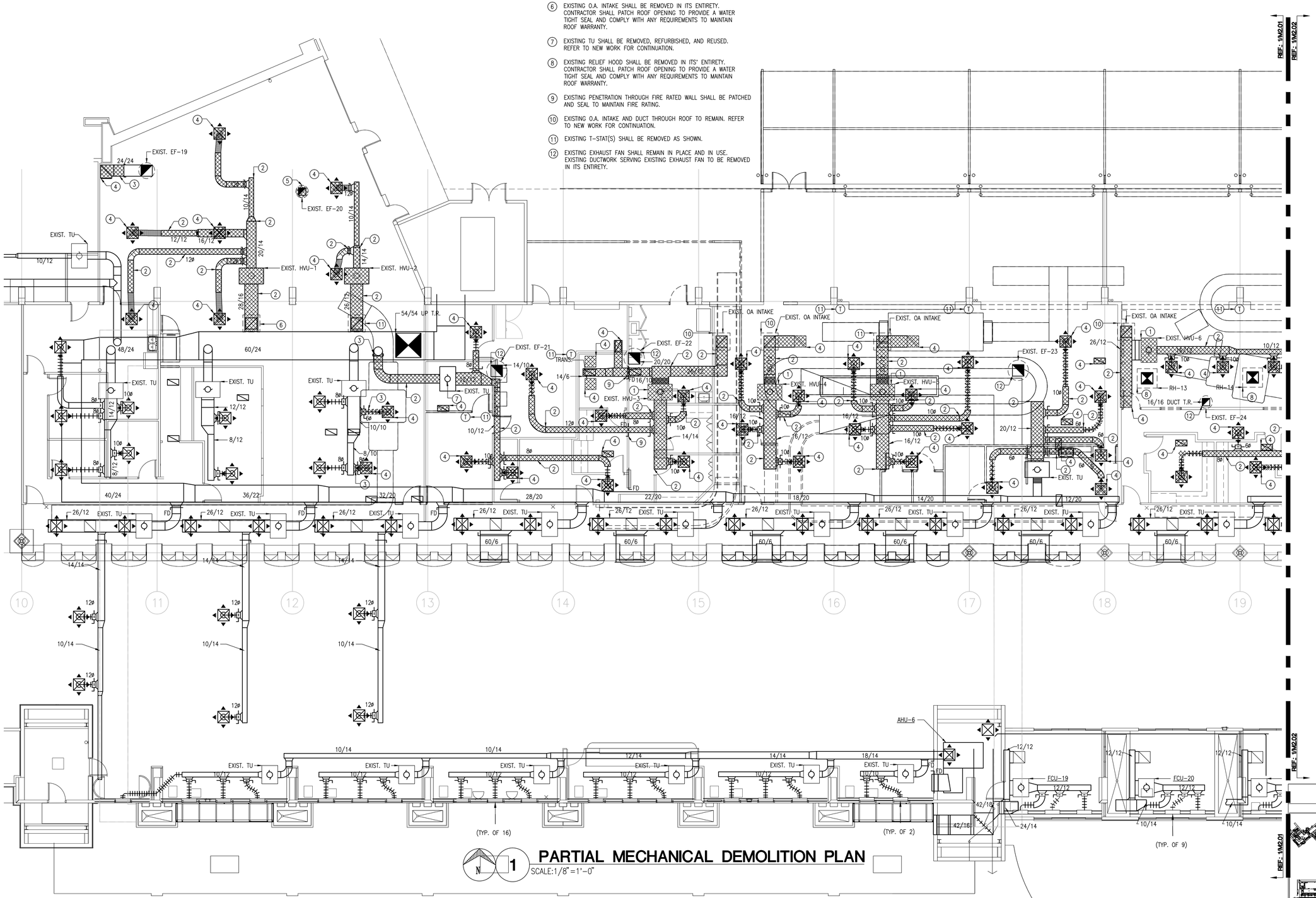

1 PARTIAL MECHANICAL DEMOLITION PLAN

SCALE:1/8"=1'-0"

KEY PLAN

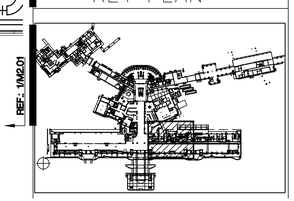

TEXAS REGISTRATION: F-0000
Alegro Engineering
Consulting Engineers
5822 Cromo Dr, Suite 105
El Paso, Texas 79912
Tel. 915.533.0700

REFERENCES – BENCHMARK

DATE	REVISIONS	BY

CONSULTANT'S NAME

mijares ● mora
ARCHITECTS INC.
EL PASO, TEXAS 79912
111 N. FESTIVAL
TEL: 915-542-1991 FAX: 542-1994

ALTERATION OF A SEALED DOCUMENT WITHOUT THE KNOWLEDGE AND CONSENT OF THE ENGINEER IS AN OFFENSE UNDER THE TEXAS ENGINEERING PRACTICE ACT.

ARCHITECT'S SEAL

STATE OF TEXAS
ROLANDO LEGARRETA
84714
LICENSED PROFESSIONAL ENGINEER
5/23/16

SCALE

DATE	MAY 2016
DESIGN BY	ALE&O
DRAWN BY	GAG
CHKD. BY	GAG
APPD. BY	RL
JOB NO.	14-154

PROJECT NAME

EL PASO INTERNATIONAL AIRPORT
CHECKED BAGGAGE INSPECTION SYSTEM
6701 CONVAIR RD. EL PASO, TEXAS

EL PASO INTERNATIONAL AIRPORT

CITY OF EL PASO

SHEET TITLE

PARTIAL MECHANICAL DEMOLITION FLOOR PLAN

M2.01

FILE NO. 0000

SHEET 0 OF 30

GENERAL NOTES:

1. EXISTING DUCT/HYDRONIC PIPING ROUTING WAS OBTAINED BY EXISTING DRAWINGS AND HAVE NOT BEEN COMPLETELY VERIFIED. ANY DISCREPANCIES BETWEEN DRAWINGS AND ACTUAL SITE CONDITIONS TO BE BROUGHT TO THE ATTENTION OF THE ENGINEER OF RECORD IN WRITING.

DEMOLITON NOTES:

1. EXISTING HEATING VENTILATING UNIT AND IT'S ACCESSORIES SHALL BE REMOVE IN ITS ENTIRETY.
2. EXISTING DUCTWORK SHALL BE REMOVED IN ITS ENTIRETY AS SHOWN.
3. EXISTING DUCTWORK WORK SHALL BE CUT, CAPPED, REMOVED AND MODIFIED AS SHOWN. REFER TO NEW WORK FOR CONTINUATION.
4. EXISTING AIR DEVICE(S) TO BE REMOVED IN ITS ENTIRETY.
5. EXISTING EXHAUST FAN SHALL BE REMOVED IN ITS ENTIRETY. CONTRACTOR SHALL PATCH ROOF OPENING TO PROVIDE A WATER TIGHT SEAL AND COMPLY WITH ANY REQUIREMENTS TO MAINTAIN ROOF WARRANTY.
6. EXISTING O.A. INTAKE SHALL BE REMOVED IN ITS ENTIRETY. CONTRACTOR SHALL PATCH ROOF OPENING TO PROVIDE A WATER TIGHT SEAL AND COMPLY WITH ANY REQUIREMENTS TO MAINTAIN ROOF WARRANTY.
7. EXISTING TU SHALL BE REMOVED AS SHOWN.
8. EXISTING RELIEF HOOD SHALL BE REMOVED IN ITS' ENTIRETY. CONTRACTOR SHALL PATCH ROOF OPENING TO PROVIDE A WATER TIGHT SEAL AND COMPLY WITH ANY REQUIREMENTS TO MAINTAIN ROOF WARRANTY.
9. EXISTING PENETRATION THROUGH FIRE RATED WALL SHALL BE PATCHED AND SEAL TO MAINTAIN FIRE RATING.
10. EXISTING O.A. INTAKE AND DUCT THROUGH ROOF TO REMAIN. REFER TO NEW WORK FOR CONTINUATION.
11. EXISTING T-STAT(S) SHALL BE REMOVED AS SHOWN.
12. EXISTING EXHAUST FAN SHALL REMAIN IN PLACE AND IN USE. EXISTING DUCTWORK SERVING EXISTING EXHAUST FAN TO BE REMOVED IN ITS ENTIRETY.

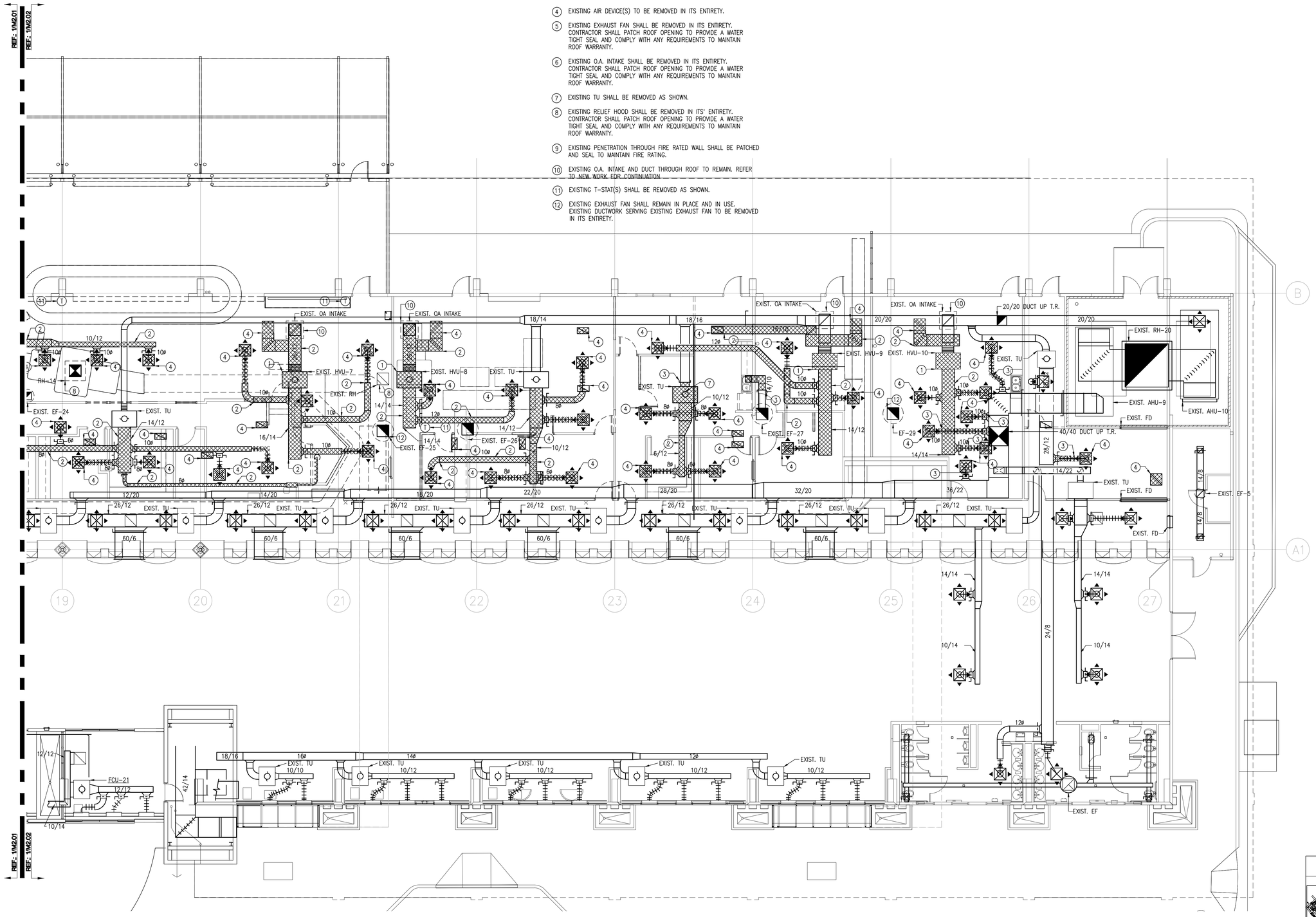

PARTIAL MECHANICAL DEMOLITION PLAN

1 SCALE:1/8"=1'-0"

TEXAS REGISTRATION: F-0000
Alegro Engineering
Consulting Engineers
5822 Cromo Dr, Suite 105
El Paso, Texas 79912
Tel. 915.533.0700

ALTERATION OF A SEALED DOCUMENT WITHOUT THE CONSENT OF THE ARCHITECT OR ENGINEER IS AN OFFENSE UNDER THE TEXAS ENGINEERING PRACTICE ACT.

REFERENCES – BENCHMARK

DATE	REVISIONS	BY

CONSULTANT'S NAME

mijares ● mora
ARCHITECTS INC.
111 N. FESTIVAL
EL PASO, TEXAS 79912
TEL: 915-542-1991
FAX: 542-1994

ARCHITECT'S SEAL

STATE OF TEXAS
ROLANDO LEGARRETA
84714
LICENSED
PROFESSIONAL ENGINEER

SCALE

DATE	MAY 2016
DESIGN BY	ALE900
DRAWN BY	GAG
CHKD. BY	GAG
APPD. BY	RL
JOB NO.	14-154

PROJECT NAME

EL PASO INTERNATIONAL AIRPORT
CHECKED BAGGAGE INSPECTION SYSTEM
6701 CONVAIR RD. EL PASO, TEXAS

EL PASO INTERNATIONAL AIRPORT

CITY OF EL PASO

KEY PLAN

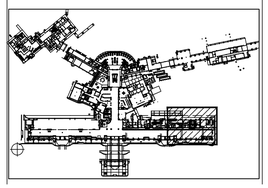

SHEET TITLE

PARTIAL MECHANICAL DEMOLITION FLOOR PLAN

M2.02

FILE NO. 0000

SHEET 1 OF 3

GENERAL NOTES:

1. EXISTING HYDRONIC PIPE ROUTING WAS OBTAINED BY EXISTING DRAWINGS AND HAVE NOT BEEN COMPLETELY VERIFIED. ANY DISCREPANCIES BETWEEN DRAWINGS AND ACTUAL SITE CONDITIONS TO BE BROUGHT TO THE ATTENTION OF THE ENGINEER OF RECORD IN WRITING.
2. KEYED NOTES ARE SHOWN ON PARTIAL PLANS.

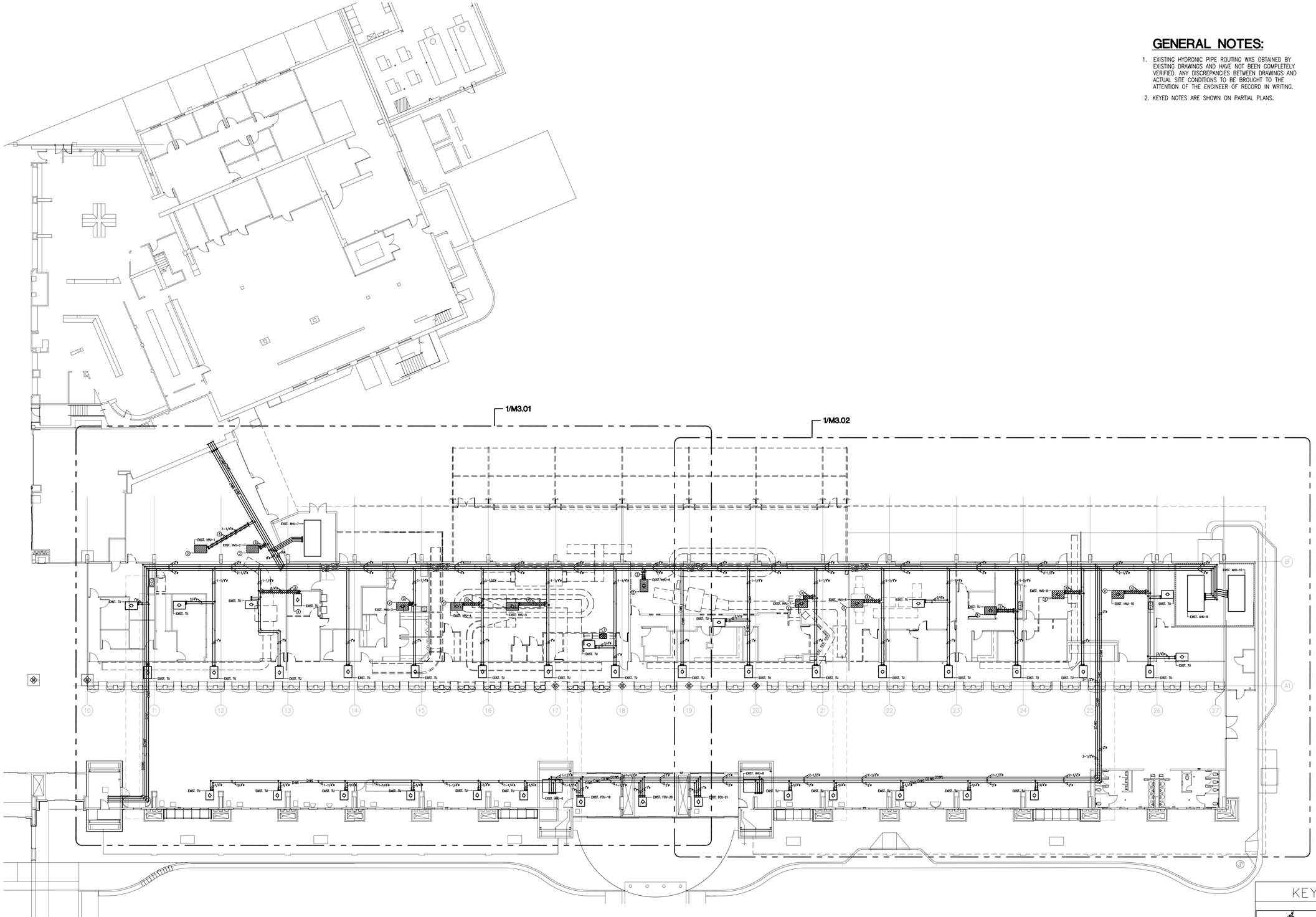

N

1 OVERALL MECHANICAL DEMOLITION PIPING PLAN

SCALE:1/16" =1'-0"

16' 8' 0 16' 32'

SCALE: 1/16" = 1'

KEY PLAN

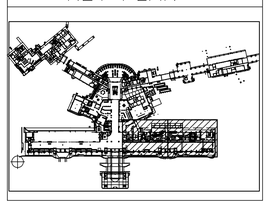

TEXAS REGISTRATION: F-000014

Alegro Engineering
Consulting Engineers
5822 Cromo Dr, Suite 105
El Paso, Texas 79912
Tel. 915.533.0700

ALTERATION OF A SEALED DOCUMENT WITHOUT PROPER AUTHORIZATION BY A LICENSED ENGINEER IS AN OFFENSE, UNDER THE TEXAS ENGINEERING PRACTICE ACT.

REFERENCES -- BENCHMARK

DATE	REVISIONS	BY

CONSULTANT'S NAME

mijares ● mora
ARCHITECTS INC.
EL PASO, TEXAS 79912
FAX: 542-1984
111 N. FESTIVAL
TEL: 915-542-1991

ARCHITECT'S SEAL

STATE OF TEXAS
ROLANDO LEGARRETA
84714
LICENSED
PROFESSIONAL ENGINEER

SCALE

DATE	MAY 2016
DESIGN BY	AEGRO
DRAWN BY	GAG
CHKD. BY	GAG
APPD. BY	RL
JOB NO.	14-154

PROJECT NAME

EL PASO INTERNATIONAL AIRPORT
CHECKED BAGGAGE INSPECTION SYSTEM

8701 CONVAIR RD. EL PASO, TEXAS

EL PASO INTERNATIONAL AIRPORT

CITY OF EL PASO

SHEET TITLE

OVERALL MECHANICAL DEMOLITION PIPING PLAN

M3.00

FILE NO. XXXX

SHEET 11 OF 34

GENERAL NOTES:

1. EXISTING DUCT/HYDRONIC PIPING ROUTING WAS OBTAINED BY EXISTING DRAWINGS AND HAVE NOT BEEN COMPLETELY VERIFIED. ANY DISCREPANCIES BETWEEN DRAWINGS AND ACTUAL SITE CONDITIONS TO BE BROUGHT TO THE ATTENTION OF THE ENGINEER OF RECORD IN WRITING.

DEMOLITON NOTES:

1. EXISTING SINK TO BE REMOVED IN ITS ENTIRETY. EXISTING SANITARY SEWER LINE TO BE CAPPED AND SEALED TO PROVIDE AIR TIGHT SEAL BELOW FINISHED GRADE. EXISTING DOMESTIC COLD AND HOT WATER AND SANITARY VENT TO BE CAPPED SEALED ABOVE CEILING.
2. EXISTING HVU SHALL BE REMOVED IN ITS ENTIRETY AS SHOWN.
3. EXITING HYDRONIC LINE SHALL BE CUT, CAPPED, AND REMOVED AS SHOWN. REFER TO NEW WORK FOR CONTINUATION.
4. EXISTING TU SHALL BE REMOVED, REFURBISHED, AND REUSED. REFER TO NEW WORK FOR CONTINUATION.
5. EXISTING TU SHALL BE REMOVED AS SHOWN.

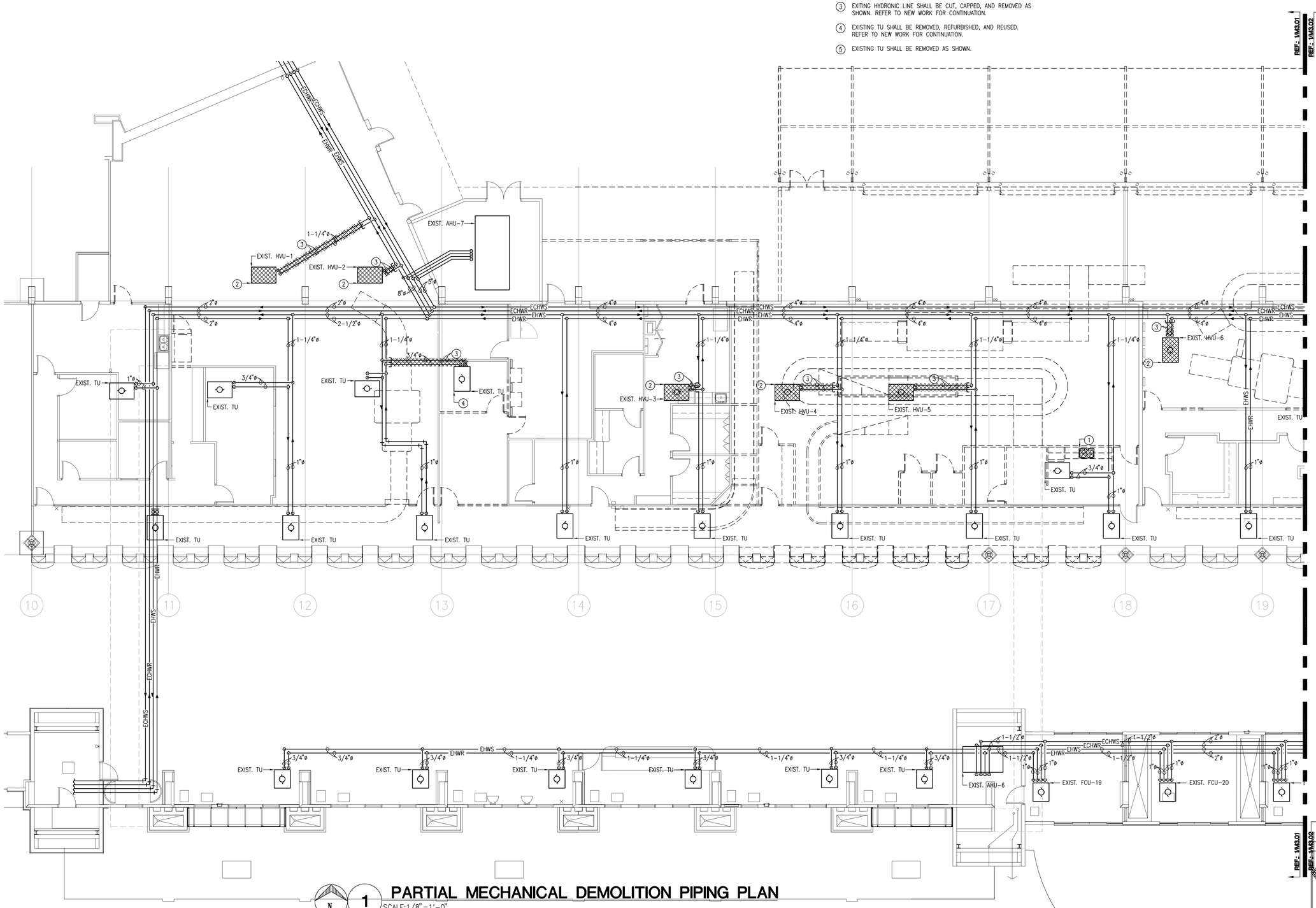

N 1 PARTIAL MECHANICAL DEMOLITION PIPING PLAN
SCALE:1/8"=1'-0"

KEY PLAN

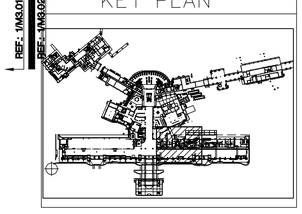

TEXAS REGISTRATION: F-000014
Alegro Engineering
Consulting Engineers
5822 Cromo Dr. Suite 105
El Paso, Texas 79912
Tel. 915.533.0700

ALTERATION OF A SEALED DOCUMENT WITHOUT THE CONSENT OF THE PROFESSIONAL ENGINEER IS AN OFFENSE UNDER THE TEXAS ENGINEERING PRACTICE ACT.

REFERENCES -- BENCHMARK

DATE	REVISIONS	BY

CONSULTANT'S NAME

mijares ● mora
ARCHITECTS INC.
EL PASO, TEXAS 79912
111 N. FESTIVAL
TEL: 915-542-1991
FAX: 542-1994

ARCHITECT'S SEAL

STATE OF TEXAS
ROLANDO LEGARRETA
84714
LICENSED
PROFESSIONAL ENGINEER
8/22/16

SCALE

DATE	MAY 2016
DESIGN BY	AEGRO
DRAWN BY	GAG
CHKD. BY	GAG
APPD. BY	RL
JOB NO.	14-154

PROJECT NAME

EL PASO INTERNATIONAL AIRPORT
CHECKED BAGGAGE INSPECTION SYSTEM

8701 CONVAIR RD. EL PASO, TEXAS

EL PASO INTERNATIONAL AIRPORT

CITY OF EL PASO

SHEET TITLE

PARTIAL MECHANICAL DEMOLITION PIPING PLAN

M3.01

FILE NO. XXXX

SHEET 13 OF 34

GENERAL NOTES:

1. EXISTING DUCT/HYDRONIC PIPING ROUTING WAS OBTAINED BY EXISTING DRAWINGS AND HAVE NOT BEEN COMPLETELY VERIFIED. ANY DISCREPANCIES BETWEEN DRAWINGS AND ACTUAL SITE CONDITIONS TO BE BROUGHT TO THE ATTENTION OF THE ENGINEER OF RECORD IN WRITING.

DEMOLITON NOTES:

1. EXISTING SINK TO BE REMOVED IN ITS ENTIRETY. EXISTING SANITARY SEWER LINE TO BE CAPPED AND SEALED TO PROVIDE AIR TIGHT SEAL BELOW FINISHED GRADE. EXISTING DOMESTIC COLD AND HOT WATER AND SANITARY VENT TO BE CAPPED SEALED ABOVE CEILING.
2. EXISTING HVU SHALL BE REMOVED IN ITS ENTIRETY AS SHOWN.
3. EXITING HYDRONIC LINE SHALL BE CUT, CAPPED, AND REMOVED AS SHOWN. REFER TO NEW WORK FOR CONTINUATION.
4. EXISTING TU SHALL BE REMOVED, REFURBISHED, AND REUSED. REFER TO NEW WORK FOR CONTINUATION.
5. EXISTING TU SHALL BE REMOVED AS SHOWN.

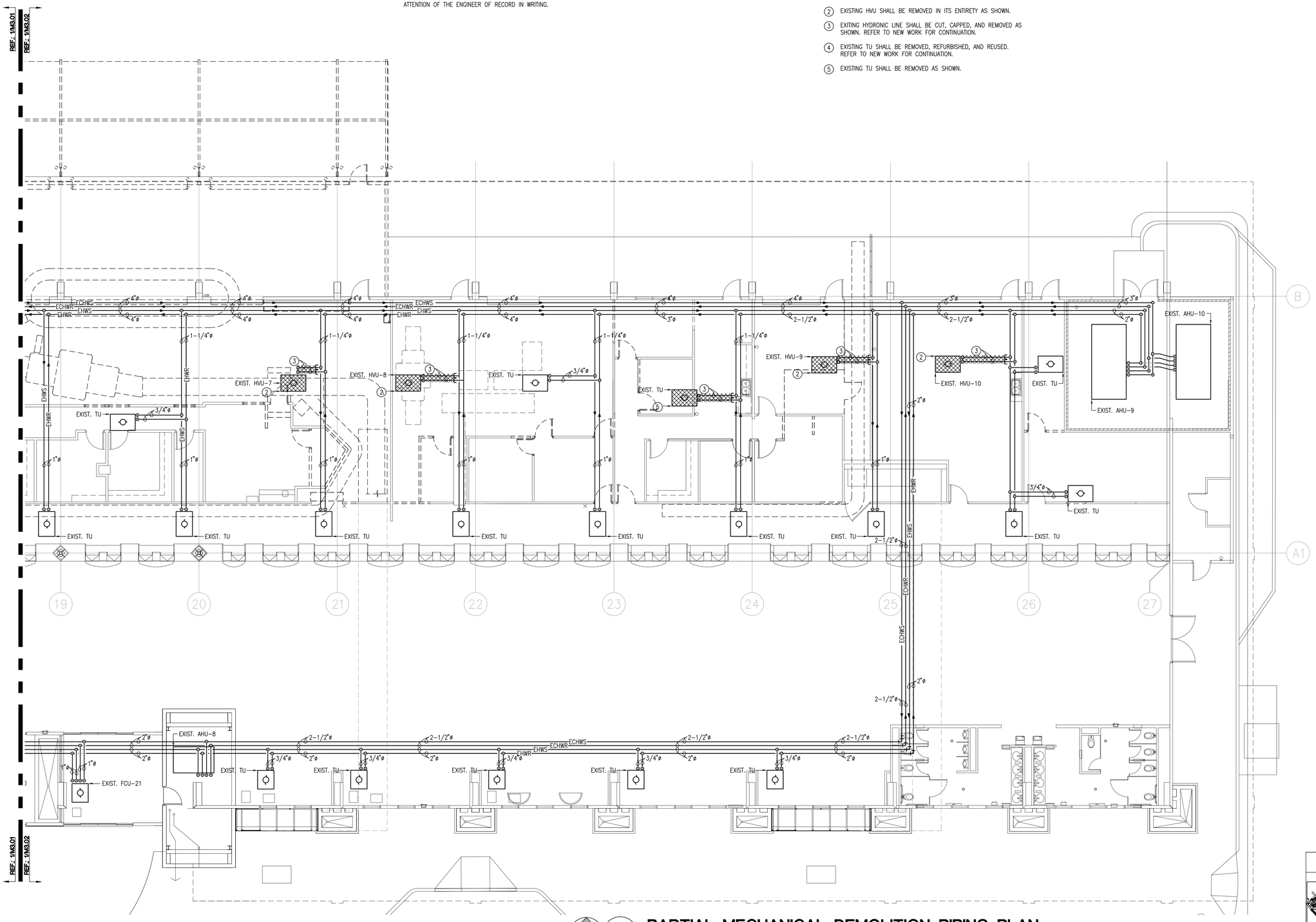

1 PARTIAL MECHANICAL DEMOLITION PIPING PLAN

SCALE:1/8"=1'-0"

KEY PLAN

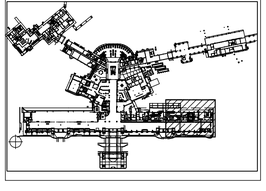

TEXAS REGISTRATION: F-000014
Alegro Engineering
Consulting Engineers
5822 Cromo Dr. Suite 105
El Paso, Texas 79912
Tel. 915.533.0700

ALTERATION OF A SEALED DOCUMENT WITHOUT THE ENGINEER'S WRITTEN PERMISSION TO ALTER THE ENGINEER IS AN OFFENSE, UNDER THE TEXAS ENGINEERING PRACTICE ACT.

REFERENCES -- BENCHMARK

DATE	REVISIONS	BY

CONSULTANT'S NAME

mijares ● mora
ARCHITECTS INC.
EL PASO, TEXAS 79912
FAX: 542-1984
111 N. FESTIVAL
TEL: 915-542-1991

ARCHITECT'S SEAL

STATE OF TEXAS
ROLANDO LEGARRETA
84714
LICENSED
PROFESSIONAL ENGINEER

SCALE

DATE	MAY 2016
DESIGN BY	AEGRO
DRAWN BY	GAG
CHKD. BY	GAG
APPD. BY	RL
JOB NO.	14-154

PROJECT NAME

EL PASO INTERNATIONAL AIRPORT
CHECKED BAGGAGE INSPECTION SYSTEM

6701 CONVAIR RD. EL PASO, TEXAS

EL PASO INTERNATIONAL

CITY OF EL PASO

SHEET TITLE

PARTIAL MECHANICAL DEMOLITION PIPING PLAN

M3.02

FILE NO. XXXX

SHEET 14 OF 34

GENERAL NOTES:

1. EXISTING DUCT/HYDRONIC PIPING ROUTING WAS OBTAINED BY EXISTING DRAWINGS AND HAVE NOT BEEN COMPLETELY VERIFIED. ANY DISCREPANCIES BETWEEN DRAWINGS AND ACTUAL SITE CONDITIONS TO BE BROUGHT TO THE ATTENTION OF THE ENGINEER OF RECORD IN WRITING.

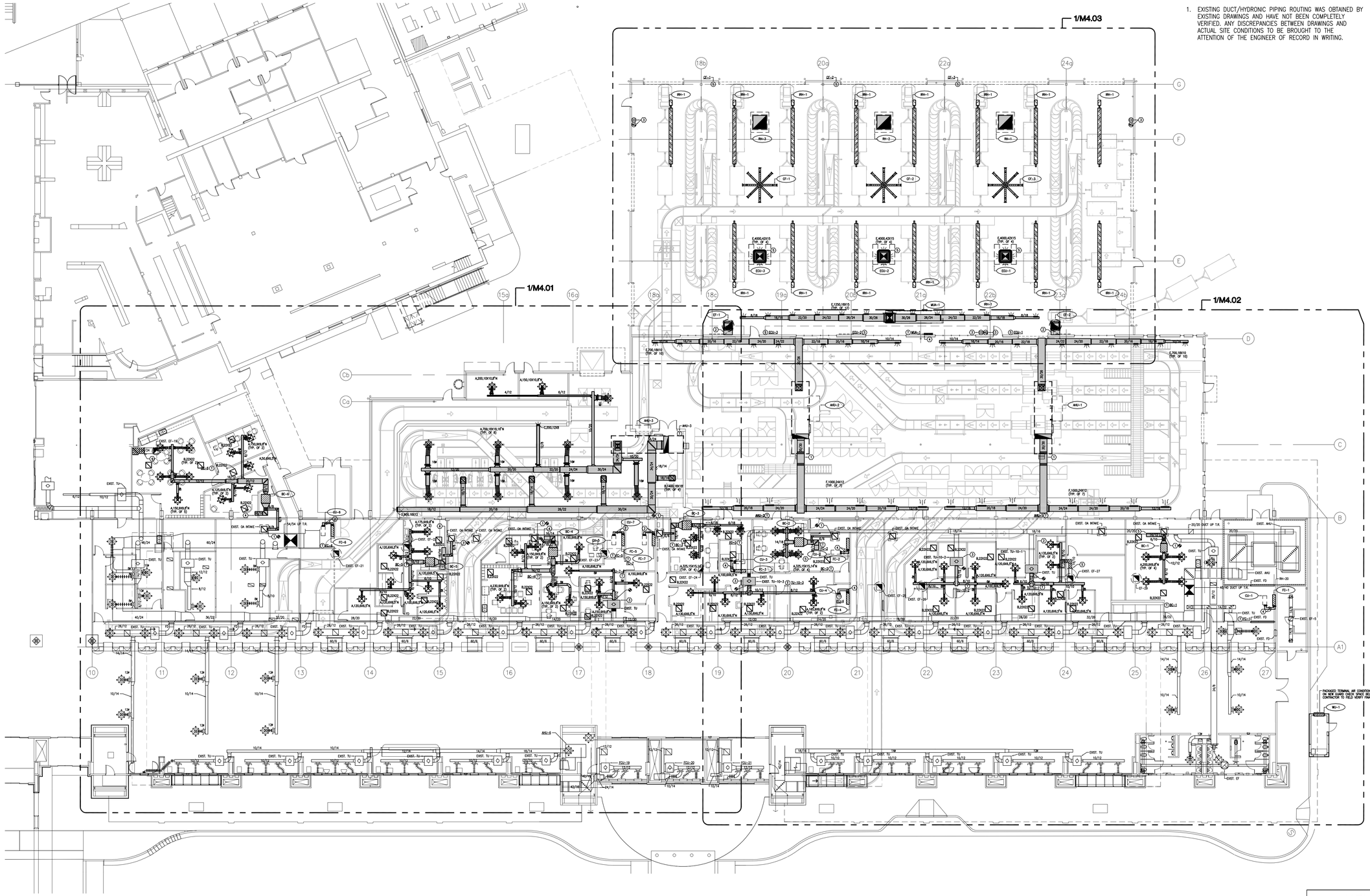

1 OVERALL MECHANICAL FLOOR PLAN - NEW WORK

SCALE:1/16"=1'-0"

16' 8' 0 16' 32'

SCALE: 1/16" = 1'

KEY PLAN

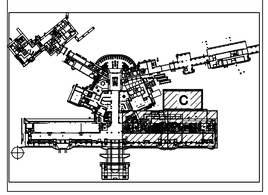

TEXAS REGISTRATION: F-000014

Alegro Engineering
Consulting Engineers
5822 Cromo Dr, Suite 105
El Paso, Texas 79912
Tel. 915.533.0700

REFERENCES -- BENCHMARK

DATE	REVISIONS	BY

CONSULTANT'S NAME

mijares ● mora
ARCHITECTS INC.
EL PASO, TEXAS 79912
111 N. FESTIVAL
TEL: 915-542-1991
FAX: 542-1994

ALTERATION OF A SEALED DOCUMENT WITHOUT THE ENGINEER'S SEAL IS A VIOLATION. THE ENGINEER IS AN OFFENSE UNDER THE TEXAS ENGINEERING PRACTICE ACT.

ARCHITECT'S SEAL

STATE OF TEXAS
ROLANDO LEGARRETA
84714
LICENSED PROFESSIONAL ENGINEER

SCALE

DATE	MAY 2016
DESIGN BY	ALEGRO
DRAWN BY	GAG
CHKD. BY	GAG
APPD. BY	RL
JOB NO.	14-154

PROJECT NAME

EL PASO INTERNATIONAL AIRPORT
CHECKED BAGGAGE INSPECTION SYSTEM

6701 CONVAIR RD. EL PASO, TEXAS

EL PASO INTERNATIONAL AIRPORT

CITY OF EL PASO

SHEET TITLE

OVERALL MECHANICAL FLOOR PLAN NEW WORK

M4.00

FILE NO. XXXX

SHEET 15 OF 34

GENERAL NOTES:

1. EXISTING DUCT/HYDRONIC PIPING ROUTING WAS OBTAINED BY EXISTING DRAWINGS AND HAVE NOT BEEN COMPLETELY VERIFIED. ANY DISCREPANCIES BETWEEN DRAWINGS AND ACTUAL SITE CONDITIONS TO BE BROUGHT TO THE ATTENTION OF THE ENGINEER OF RECORD IN WRITING.

KEYED NOTES:

1. CONTRACTOR SHALL EXTEND FULL SIZE (24/24) DUCT SERVING EXISTING O.A. INTAKE AND CONNECT NEW O.A. DUCT AS SHOWN.
2. RL/RS LINES TO BE SIZED AND INSTALLED AS MANUFACTURERS RECOMMENDATIONS.
3. CONTRACTOR SHALL CONNECT TO EXISTING TU AS SHOWN CONTRACTOR SHALL RE-FURBISH EXISTING TU TO LIKE NEW CONDITIONS.
4. CONTRACTOR SHALL PROVIDE MESH SCREEN AT DUCT OPENING.

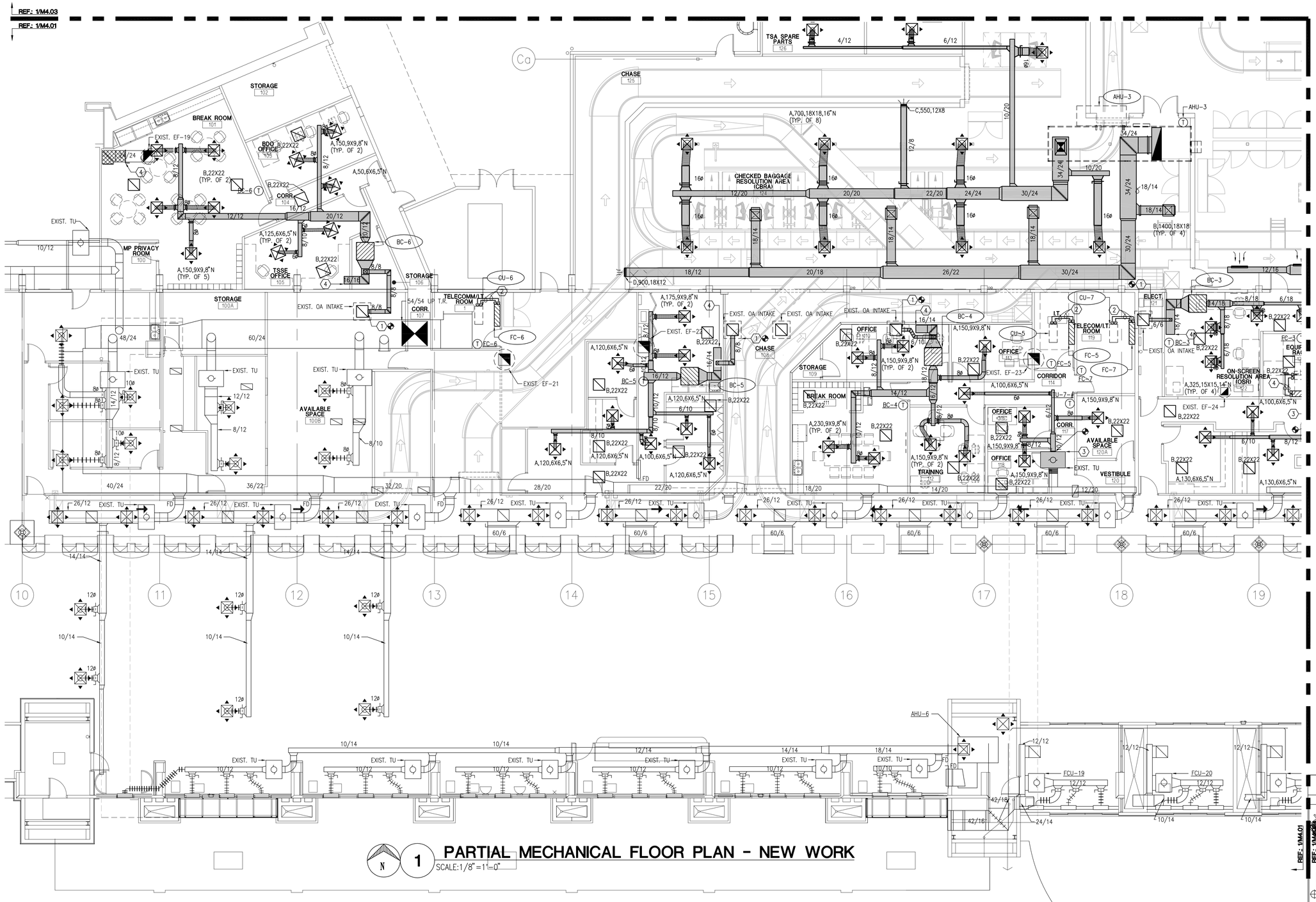

1 PARTIAL MECHANICAL FLOOR PLAN - NEW WORK
SCALE:1/8" = 1'-0"

KEY PLAN

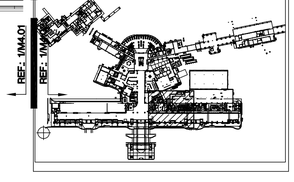

TEXAS REGISTRATION: F-000014
Alegro Engineering
Consulting Engineers
5822 Cromo Dr. Suite 105
El Paso, Texas 79912
Tel. 915.533.0700

ALTERATION OF A SEALED DOCUMENT WITHOUT THE CONSENT OF THE PROFESSIONAL ENGINEER IS AN OFFENSE UNDER THE TEXAS ENGINEERING PRACTICE ACT.

REFERENCES -- BENCHMARK

DATE	REVISIONS	BY

CONSULTANT'S NAME

mijares ● mora
ARCHITECTS INC.
EL PASO, TEXAS 79912
111 N. FESTIVAL
TEL: 915-542-1991
FAX: 542-1994

ARCHITECT'S SEAL

STATE OF TEXAS
ROLANDO LEGARRETA
84714
LICENSED PROFESSIONAL ENGINEER

SCALE

DATE	MAY 2016
DESIGN BY	ALEGRO
DRAWN BY	GAG
CHKD. BY	GAG
APPD. BY	RL
JOB NO.	14-154

PROJECT NAME

EL PASO INTERNATIONAL AIRPORT
CHECKED BAGGAGE INSPECTION SYSTEM
6701 CONVAIR RD. EL PASO, TEXAS

EL PASO INTERNATIONAL AIRPORT

CITY OF EL PASO

SHEET TITLE
PARTIAL MECHANICAL FLOOR PLAN NEW WORK

M4.01

FILE NO. XXXX

SHEET 16 OF 34

GENERAL NOTES:

1. EXISTING DUCT/HYDRONIC PIPING ROUTING WAS OBTAINED BY EXISTING DRAWINGS AND HAVE NOT BEEN COMPLETELY VERIFIED. ANY DISCREPANCIES BETWEEN DRAWINGS AND ACTUAL SITE CONDITIONS TO BE BROUGHT TO THE ATTENTION OF THE ENGINEER OF RECORD IN WRITING.

KEYED NOTES:

1. CONTRACTOR SHALL EXTEND FULL SIZE (24/24) DUCT SERVING EXISTING O.A. INTAKE AND CONNECT NEW O.A. DUCT AS SHOWN.
2. CONTRACTOR SHALL INSTALL EXISTING TU INDENTIFIED ON DEMOLITION DRAWING TO BE REFURBISHED AND RE-USED AS SHOWN.
3. CONTRACTOR SHALL CONNECT TO EXISTING TU AS SHOWN CONTRACTOR SHALL RE-FURBISH EXISTING TU TO LIKE NEW CONDITIONS.
4. RL/RS LINES TO BE SIZED AND INSTALLED AS MANUFACTURERS RECOMMENDATIONS.
5. CONTRACTOR SHALL PROVIDE MESH SCREEN AT DUCT OPENING.

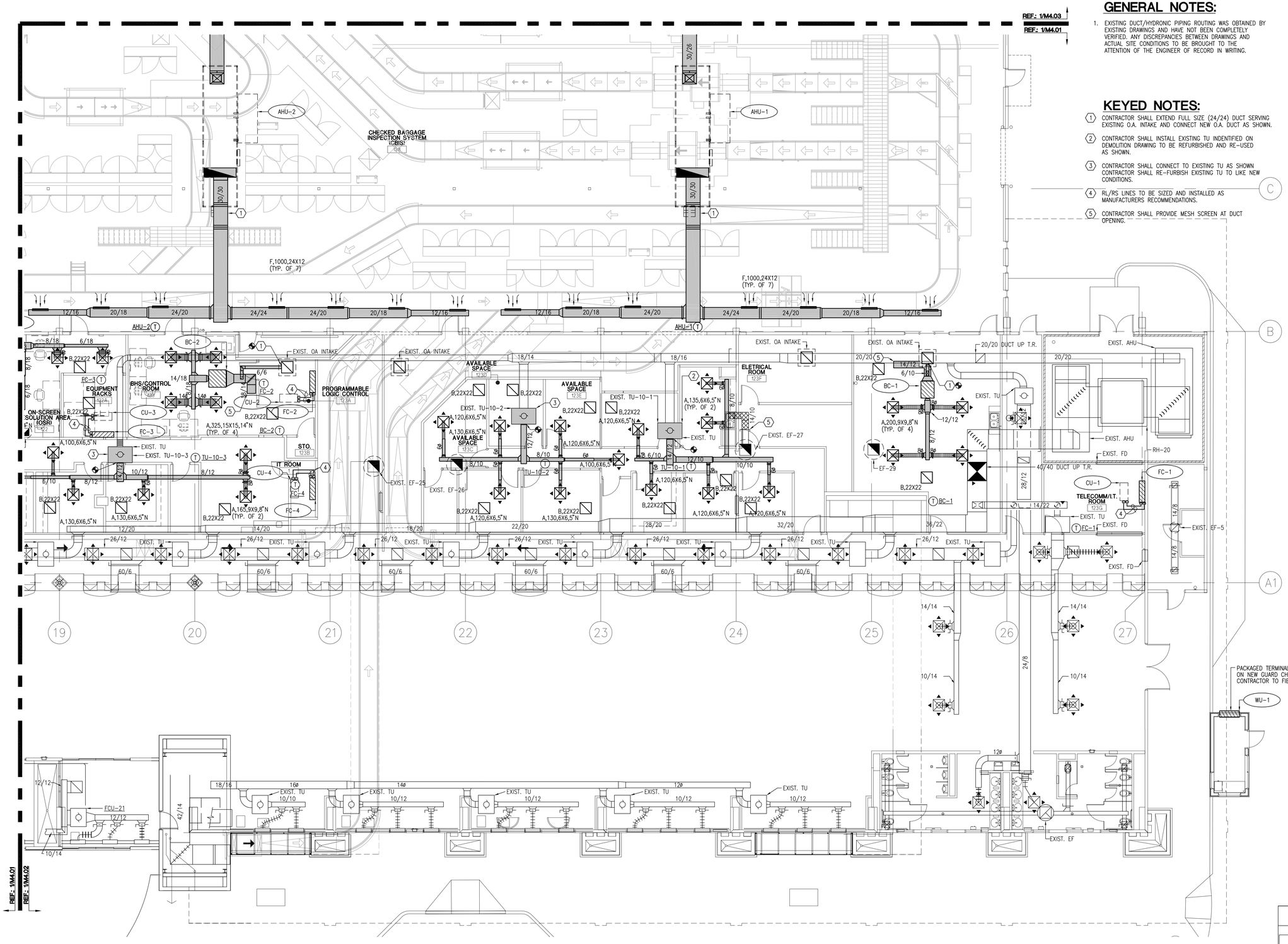

PARTIAL MECHANICAL FLOOR PLAN - NEW WORK

1 SCALE:1/8"=1'-0"

KEY PLAN

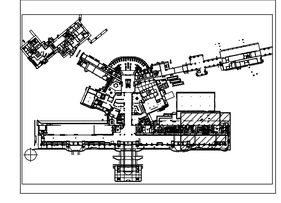

TEXAS REGISTRATION: F-000014
Alegro Engineering
Consulting Engineers
5822 Cromo Dr, Suite 105
El Paso, Texas 79912
Tel. 915.533.0700

ALTERATION OF A SEALED DOCUMENT WITHOUT THE KNOWLEDGE AND CONSENT OF THE ENGINEER IS AN OFFENSE UNDER THE TEXAS ENGINEERING PRACTICE ACT.

REFERENCES -- BENCHMARK

DATE	REVISIONS	BY

CONSULTANT'S NAME

mijares mora
ARCHITECTS INC.
EL PASO, TEXAS 79912
TEL: 915-542-1991
FAX: 542-1994

ARCHITECT'S SEAL

STATE OF TEXAS
ROLANDO LEGARRETA
84714
LICENSED PROFESSIONAL ENGINEER

SCALE

DATE	MAY 2016
DESIGN BY	ALEGRO
DRAWN BY	GAG
CHKD. BY	GAG
APPD. BY	RL
JOB NO.	14-154

PROJECT NAME

EL PASO INTERNATIONAL AIRPORT
CHECKED BAGGAGE INSPECTION SYSTEM
6701 CONVAR RD. EL PASO, TEXAS

EL PASO INTERNATIONAL AIRPORT

CITY OF EL PASO

SHEET TITLE

PARTIAL MECHANICAL FLOOR PLAN NEW WORK

M4.02

FILE NO. XXXX

SHEET 16 OF 34

KEYED NOTES:

1. CONTRACTOR SHALL OFFSET RETURN DUCT BELOW STRUCTURE AS SHOWN. BOTTOM OF RETURN DUCT SHALL BE A MINIMUM OF 11'6" A.F.F. ON OFFSET SECTION.
2. CONTRACTOR SHALL TRANSITION TO 20/36 ONCE BELOW ROOF DECK. CONTRACTOR SHALL EXTEND DUCT 12" A.F.F. AND PROVIDE EXHAUST GRILLE (G,5600,48X32).
3. CARBON MONOXIDE AND NITROGEN DIOXIDE TRANSMITTER SHALL BE MOUNTED AT 48" A.F.F.
4. LOCATION OF MONITOR/CONTROLLER FOR MULTI-POINT CARBON MONOXIDE AND NITROGEN DIOXIDE DETECTION SYSTEM. EXHAUST FANS: EF-1 AND EF-2 SHALL BE INTERLOCKED WITH THE CO/NO2 DETECTION SYSTEM.
5. CONTRACTOR SHALL TRANSITION TO 40/40 ONCE BELOW ROOF DECK. CONTRACTOR SHALL EXTEND DUCT TO SUPPLY PLENUM 50"W, 50"L, AND 24"H AT 13" A.F.F.

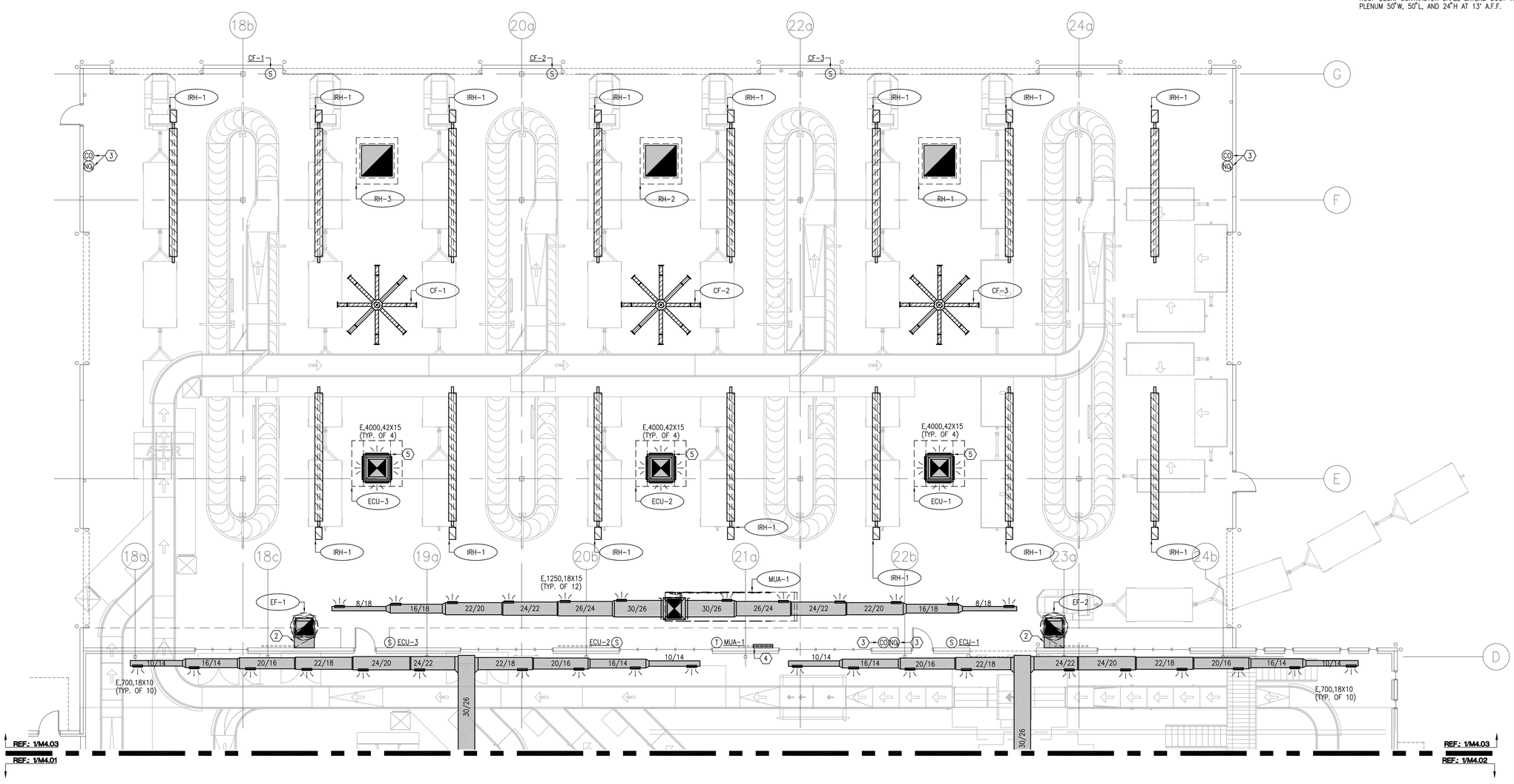

1 PARTIAL MECHANICAL FLOOR PLAN - NEW WORK

SCALE:1/8"=1'-0"

KEY PLAN

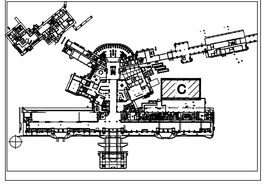

TEXAS REGISTRATION: F-000014
Alegro Engineering
Consulting Engineers
5822 Cromo Dr, Suite 105
El Paso, Texas 79912
Tel. 915.533.0700

ALTERATION OF A SEALED DOCUMENT WITHOUT THE PROPER NOTATION OF THE PROFESSIONAL ENGINEER IS AN OFFENSE UNDER THE TEXAS ENGINEERING PRACTICE ACT.

REFERENCES -- BENCHMARK

DATE	REVISIONS	BY

CONSULTANT'S NAME

mijares mora
ARCHITECTS INC.
EL PASO, TEXAS 79912
FAX: 542-1984
TEL: 915-542-1991

ARCHITECT'S SEAL

STATE OF TEXAS
ROLANDO LEGARRETA
84714
LICENSED PROFESSIONAL ENGINEER

SCALE

DATE	MAY 2016
DESIGN BY	AEGRO
DRAWN BY	GAG
CHKD. BY	GAG
APPD. BY	RL
JOB NO.	14-154

PROJECT NAME

EL PASO INTERNATIONAL AIRPORT
CHECKED BAGGAGE INSPECTION SYSTEM

6701 CONVAIR RD. EL PASO, TEXAS

EL PASO INTERNATIONAL

CITY OF EL PASO

SHEET TITLE

PARTIAL MECHANICAL FLOOR PLAN NEW WORK

M4.03

FILE NO. XXXX

SHEET 18 OF 34

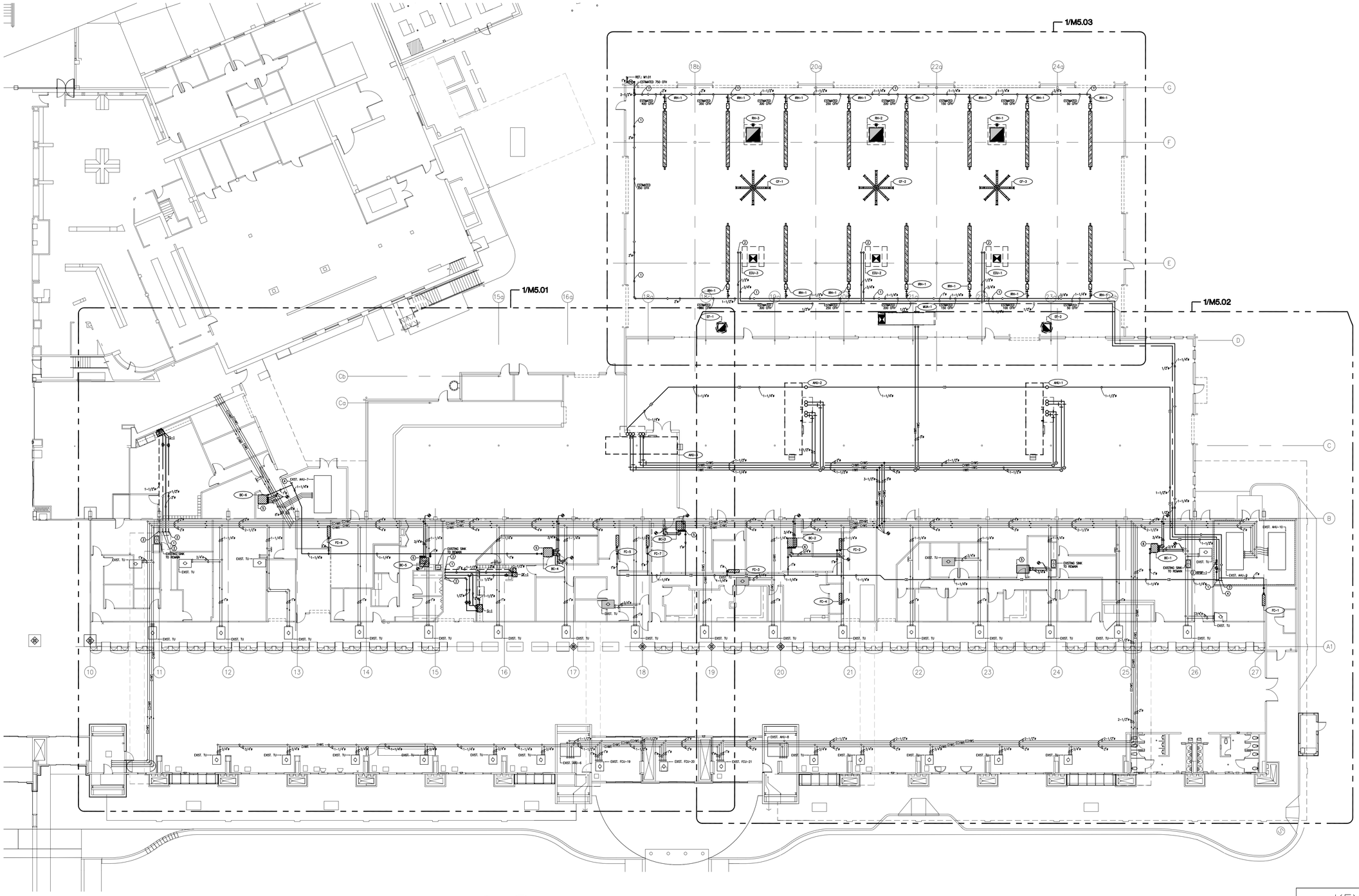

1 OVERALL MECHANICAL PIPING FLOOR PLAN - NEW WORK

SCALE:1/16" =1'-0"

16' 8' 0 16' 32'

SCALE: 1/16" = 1'

KEY PLAN

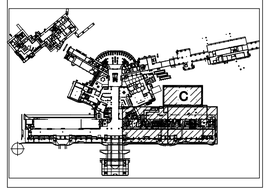

TEXAS REGISTRATION: F-000014

Alegro Engineering
Consulting Engineers
5822 Cromo Dr, Suite 105
El Paso, Texas 79912
Tel. 915.533.0700

REFERENCES -- BENCHMARK

DATE	REVISIONS	BY

CONSULTANT'S NAME

mijares ● mora
ARCHITECTS INC.
EL PASO, TEXAS 79912
111 N. FESTIVAL
TEL: 915-542-1991
FAX: 542-1994

ALTERATION OF A SEALED DOCUMENT WITHOUT THE LICENSED PROFESSIONAL ENGINEER'S SEAL IS AN OFFENSE UNDER THE TEXAS ENGINEERING PRACTICE ACT.

ARCHITECT'S SEAL

STATE OF TEXAS
ROLANDO LEGARRETA
84714
LICENSED PROFESSIONAL ENGINEER
3/27/14

SCALE

DATE	MAY 2016
DESIGN BY	ALEGRO
DRAWN BY	GAG
CHKD. BY	GAG
APPD. BY	RL
JOB NO.	14-154

PROJECT NAME

EL PASO INTERNATIONAL AIRPORT
CHECKED BAGGAGE INSPECTION SYSTEM

8701 CONVAIR RD. EL PASO, TEXAS

EL PASO INTERNATIONAL AIRPORT

CITY OF EL PASO

SHEET TITLE

OVERALL MECHANICAL PIPING PLAN NEW WORK

M5.00

FILE NO. XXXX

SHEET 19 OF 34

KEYED NOTES:

1. EXTEND AND CONNECT NEW 2"ø SANITARY WASTE LINE TO NEAREST MINIMUM 2"ø EXISTING SANITARY WASTE LINE.
2. EXTEND AND CONNECT NEW 1/2"ø DOMESTIC COLD AND HOT WATER LINES TO NEAREST MINIMUM 1/2"ø EXISTING DOMESTIC COLD AND HOT WATER LINES.
3. EXTEND AND CONNECT NEW 1-1/2"ø SANITARY VENT LINES NEAREST MINIMUM 1-1/2"ø EXISTING SANITARY VENT LINES.
4. EXTEND AND DISCHARGE 1-1/4"ø CONDENSATE DRAIN LINE TO EXISTING FLOOR SINK IN EXISTING MECHANICAL ROOM.
5. EXTEND AND CONNECT TO EXISTING TU THAT HAS BEEN RELOCATE. CONTRACTOR TO REFURBISH TO LIKE NEW CONDITIONS.
6. CONTRACTOR SHALL EXTEND AND CONNECT NEW 3/4"ø HWS/HWR AND CHWS/CHWR TO NEW BC'S AS SHOWN.

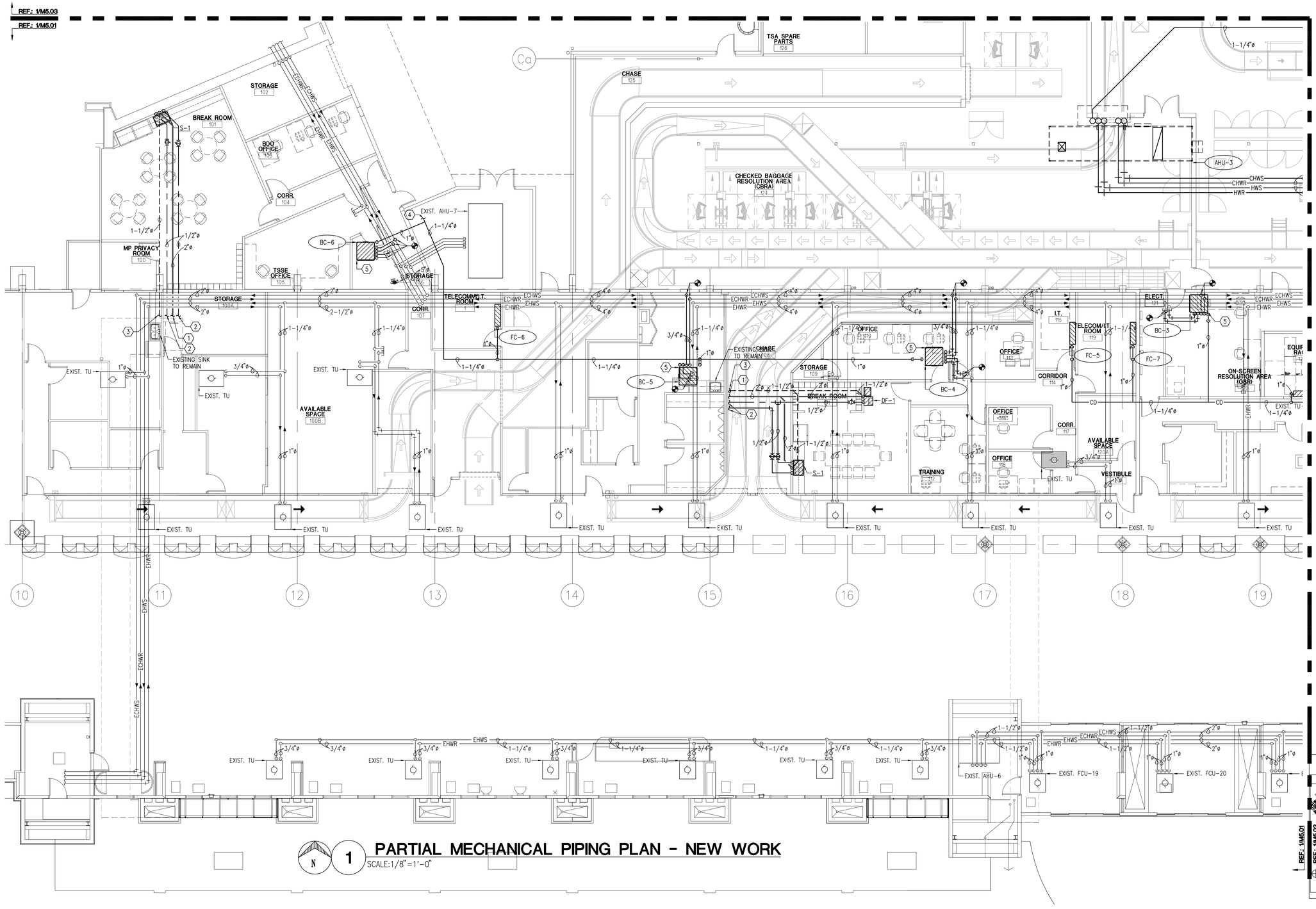

1 PARTIAL MECHANICAL PIPING PLAN - NEW WORK

SCALE:1/8"=1'-0"

KEY PLAN

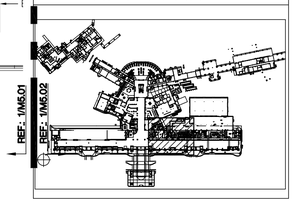

TEXAS REGISTRATION: F-000014
Alegro Engineering
Consulting Engineers
5822 Cromo Dr. Suite 105
El Paso, Texas 79912
Tel. 915.533.0700

REFERENCES -- BENCHMARK

DATE	REVISIONS	BY

CONSULTANT'S NAME

mijares ● mora
ARCHITECTS INC.
EL PASO, TEXAS 79912
111 N. FESTIVAL
TEL: 915-542-1984
FAX: 542-1991

ARCHITECT'S SEAL

STATE OF TEXAS
ROLANDO LEGARRETA
84714
LICENSED PROFESSIONAL ENGINEER
5/20/16

ALTERATION OF A SEALED DOCUMENT WITHOUT THE KNOWLEDGE AND CONSENT OF THE ENGINEER IS AN OFFENSE UNDER THE TEXAS ENGINEERING PRACTICE ACT.

SCALE

DATE	MAY 2016
DESIGN BY	ALEGRO
DRAWN BY	GAG
CHKD. BY	GAG
APPD. BY	RL
JOB NO.	14-154

PROJECT NAME

EL PASO INTERNATIONAL AIRPORT
CHECKED BAGGAGE INSPECTION SYSTEM

6701 CONVAIR RD. EL PASO, TEXAS

EL PASO

CITY OF EL PASO

SHEET TITLE

PARTIAL MECHANICAL PIPING PLAN NEW WORK

M5.01

FILE NO. XXXX

SHEET 20 OF 34

KEYED NOTES:

1. EXTEND AND CONNECT NEW 1/2"ø WATER TO EXISTING 1-1/4"ø WATER LINE IN EXISTING MECHANICAL ROOM.
2. CONTRACTOR TO INSTALLED NEW RPBP-1 IN AN ACCESSIBLE LOCATION APPROXIMATE 5' ABOVE FINISHED FLOOR.
3. EXTEND AND DISCHARGE 1-1/4"ø DRAIN LINE FROM EVAP COOLER TO EXISTING FLOOR SINK IN EXISTING MECHANICAL ROOM.
4. EXTEND AND DISCHARGE 2"ø CONDENSATE DRAIN LINE TO EXISTING FLOOR SINK IN EXISTING MECHANICAL ROOM.
5. CONTRACTOR SHALL EXTEND AND CONNECT NEW 3/4"ø HWS/HWR AND CHWS/CHWR TO NEW BC'S AS SHOWN.

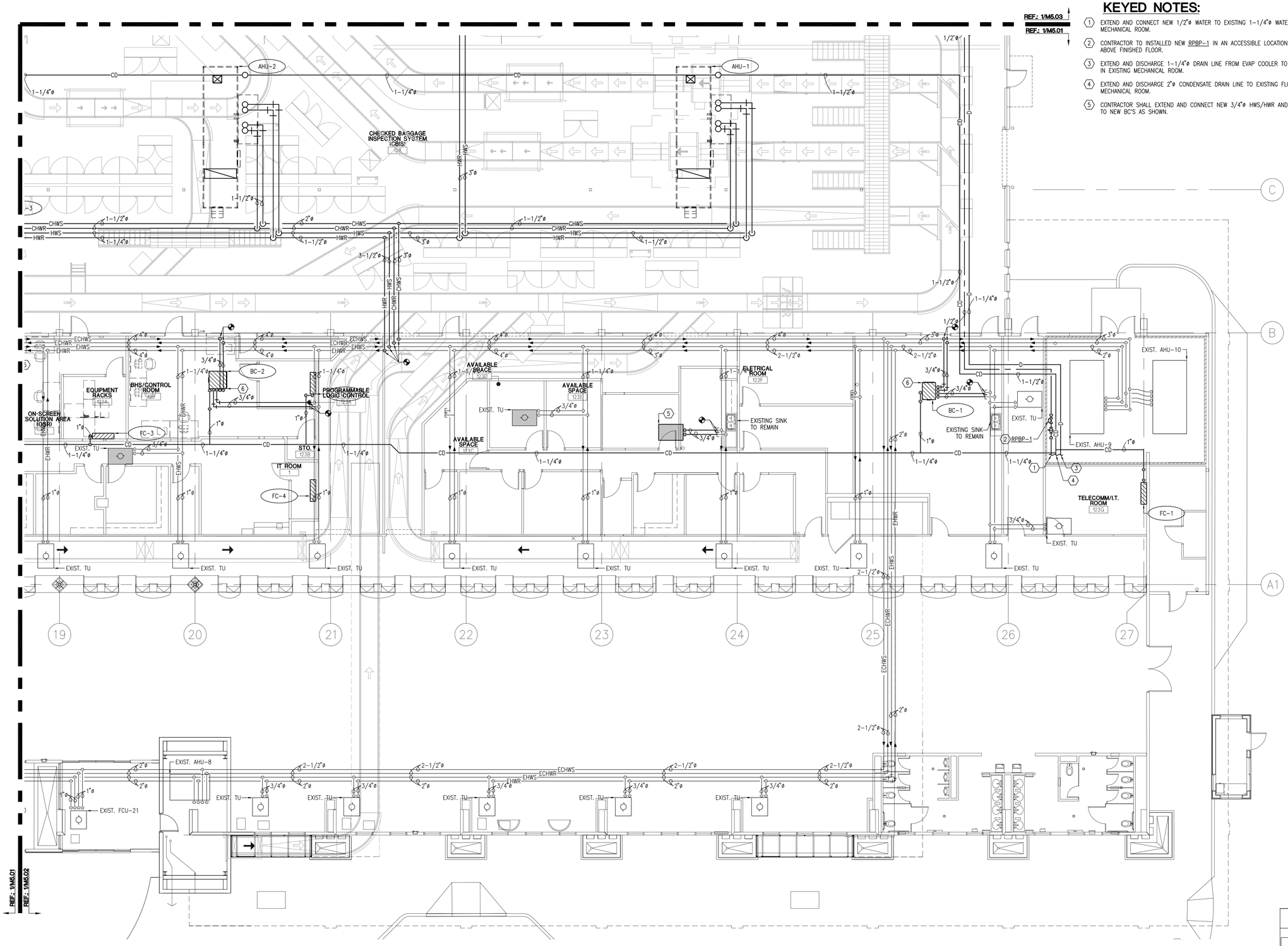

1 PARTIAL MECHANICAL PIPING PLAN - NEW WORK

SCALE: 1/8" = 1'-0"

KEY PLAN

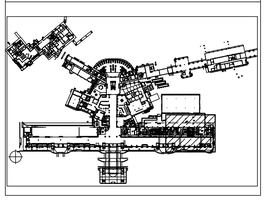

TEXAS REGISTRATION: F-000014
Alegro Engineering
Consulting Engineers
5822 Cromo Dr., Suite 105
El Paso, Texas 79912
Tel. 915.533.0700

ALTERATION OF A SEALED DOCUMENT WITHOUT THE ENGINEER'S WRITTEN CONSENT IS A VIOLATION OF THE TEXAS ENGINEERING PRACTICE ACT.

REFERENCES -- BENCHMARK

DATE	REVISIONS	BY

CONSULTANT'S NAME

mijares ● mora
ARCHITECTS INC.
EL PASO, TEXAS 79912
111 N. FESTIVAL
TEL: 915-542-1991
FAX: 542-1994

ARCHITECT'S SEAL

STATE OF TEXAS
ROLANDO LEGARRETA
84714
LICENSED PROFESSIONAL ENGINEER

SCALE

DATE	MAY 2016
DESIGN BY	AEGRO
DRAWN BY	GAG
CHKD. BY	GAG
APPD. BY	RL
JOB NO.	14-154

PROJECT NAME

EL PASO INTERNATIONAL AIRPORT
CHECKED BAGGAGE INSPECTION SYSTEM
8701 CONVAIR RD. EL PASO, TEXAS

EL PASO INTERNATIONAL AIRPORT

CITY OF EL PASO

SHEET TITLE

PARTIAL MECHANICAL PIPING PLAN NEW WORK

M5.02

FILE NO. XXXX

SHEET 21 OF 34

KEYED NOTES:

1. LOW PRESSURE GAS LINE SIZED BASED ON TABLE 402.4(2) OF THE 2009 IFGC AT A DISTANCE OF 350' FROM PRESSURE REGULATOR TO FARTHEST PRESSURE GAS CONSUMING EQUIPMENT.
2. 1/2"ø WATER LINE UP T.R. TO EVAP COOLER. PROVIDE ISOLATION VALVE ON WATER LINE ABOVE ROOF.

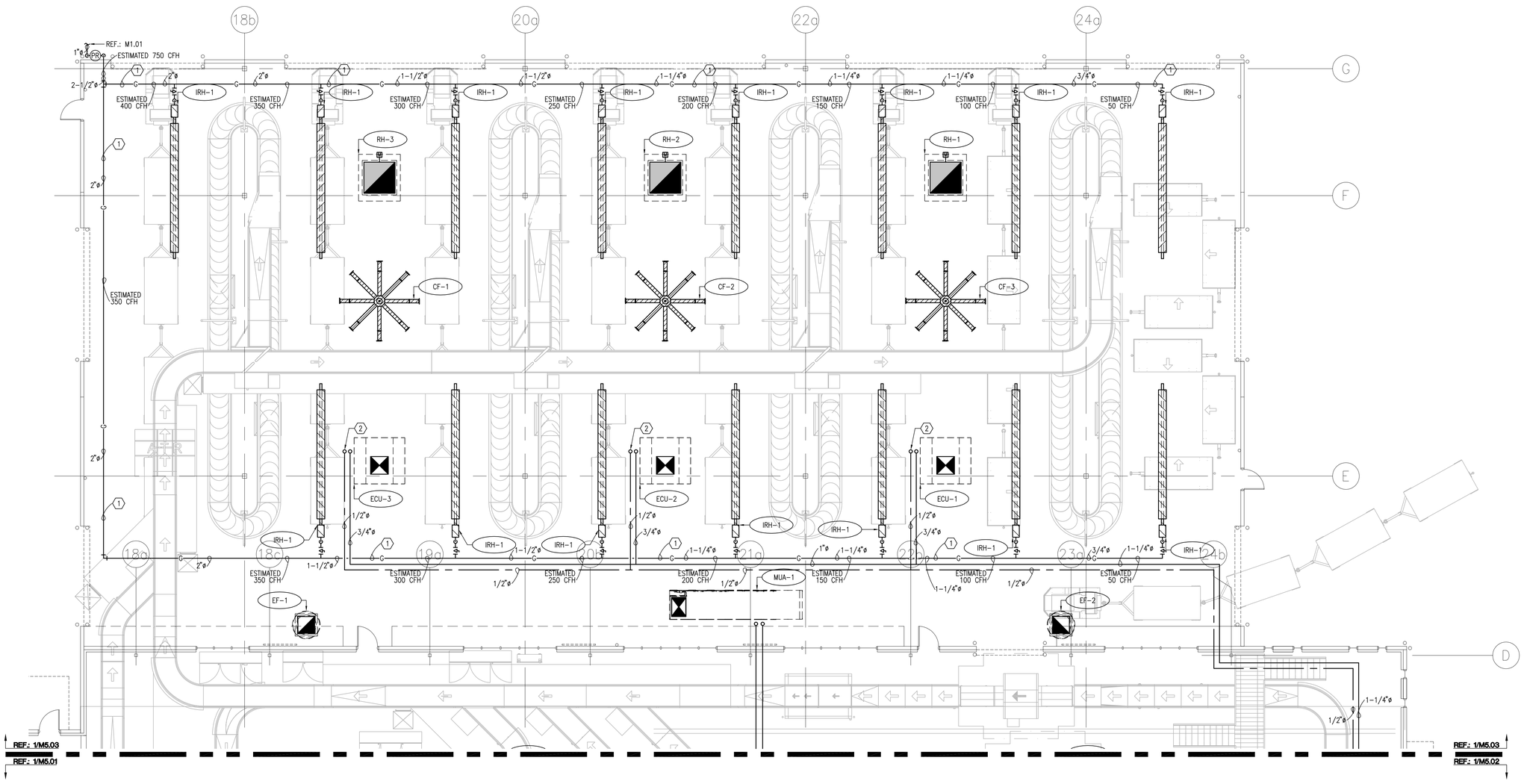

N

1 PARTIAL MECHANICAL PIPING PLAN - NEW WORK

SCALE:1/8"=1'-0"

TEXAS REGISTRATION: F-000014
Alegro Engineering
Consulting Engineers
5822 Cromo Dr, Suite 105
El Paso, Texas 79912
Tel. 915.533.0700

ALTERATION OF A SEALED DOCUMENT WITHOUT PROPER AUTHORIZATION BY A LICENSED ENGINEER IS AN OFFENSE UNDER THE TEXAS ENGINEERING PRACTICE ACT.

REFERENCES -- BENCHMARK

DATE	REVISIONS	BY

CONSULTANT'S NAME

mijares ● mora
ARCHITECTS INC.
EL PASO, TEXAS 79912
111 N. FESTIVAL
TEL: 915-542-1991
FAX: 542-1994

ARCHITECT'S SEAL

STATE OF TEXAS
ROLANDO LEGARRETA
84714
LICENSED
PROFESSIONAL ENGINEER
5/2/16

SCALE

DATE	MAY 2016
DESIGN BY	AEG80
DRAWN BY	GAG
CHKD. BY	GAG
APPD. BY	RL
JOB NO.	14-154

PROJECT NAME

EL PASO INTERNATIONAL AIRPORT
CHECKED BAGGAGE INSPECTION SYSTEM
8701 CONVAIR RD. EL PASO, TEXAS

EL PASO INTERNATIONAL AIRPORTS

CITY OF EL PASO

KEY PLAN

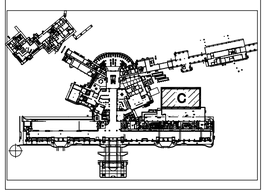

SHEET TITLE

PARTIAL MECHANICAL PIPING PLAN NEW WORK

M5.03

FILE NO. XXXX

SHEET 22 OF 34

GENERAL NOTES:

1. EXISTING DUCT/HYDRONIC PIPING ROUTING WAS OBTAINED BY EXISTING DRAWINGS AND HAVE NOT BEEN COMPLETELY VERIFIED. ANY DISCREPANCIES BETWEEN DRAWINGS AND ACTUAL SITE CONDITIONS TO BE BROUGHT TO THE ATTENTION OF THE ENGINEER OF RECORD IN WRITING.

KEYED NOTES:

1. RL/RS LINES TO BE SIZED AND INSTALLED AS MANUFACTURERS RECOMMENDATIONS.
2. EXTEND AND DISCHARGE 1-1/4"ø CONDENSATE DRAIN LINE TO EXISTING FLOOR SINK IN EXISTING MECHANICAL ROOM.

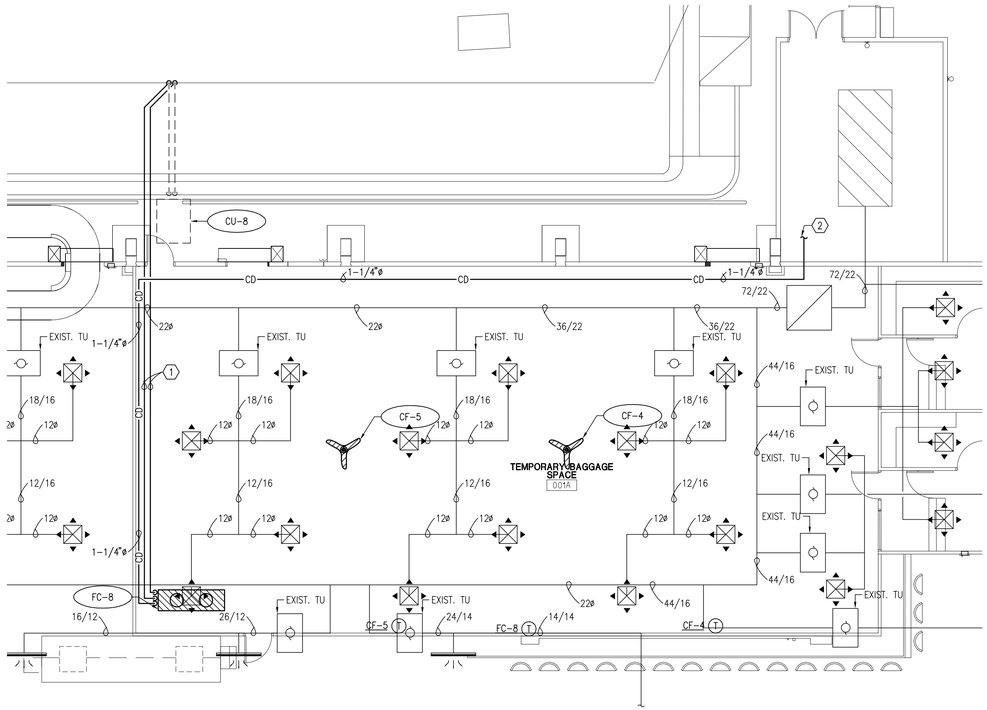

N

1 PARTIAL MECHANICAL FLOOR PLAN - NEW WORK

SCALE:1/8"=1'-0"

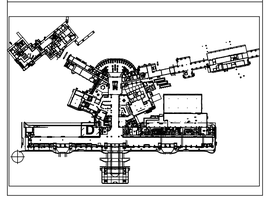

TEXAS REGISTRATION: F-000014
Alegro Engineering
Consulting Engineers
5822 Cromo Dr. Suite 105
El Paso, Texas 79912
Tel. 915.533.0700

ALTERATION OF A SEALED DOCUMENT WITHOUT PROPER AUTHORIZATION BY THE PROFESSIONAL ENGINEER IS AN OFFENSE UNDER THE TEXAS ENGINEERING PRACTICE ACT.

REFERENCES -- BENCHMARK

DATE	REVISIONS	BY

CONSULTANT'S NAME

mijares mora
ARCHITECTS INC.
EL PASO, TEXAS 79912
FAX: 542-1944
111 N. FESTIVAL
TEL: 915-542-1991

ARCHITECT'S SEAL

STATE OF TEXAS
ROLANDO LEGARRETA
84714
LICENSED
PROFESSIONAL ENGINEER

SCALE

DATE	MAY 2016
DESIGN BY	AEGRO
DRAWN BY	GAG
CHKD. BY	GAG
APPD. BY	RL
JOB NO.	14-154

PROJECT NAME

EL PASO INTERNATIONAL AIRPORT
CHECKED BAGGAGE INSPECTION SYSTEM

6701 CONVAIR RD. EL PASO, TEXAS

EL PASO INTERNATIONAL

CITY OF EL PASO

SHEET TITLE

PARTIAL MECHANICAL FLOOR PLAN NEW WORK

M6.00

FILE NO. XXXX

SHEET 23 OF 34

GENERAL NOTES:

1. EXISTING DUCT/HYDRONIC PIPING ROUTING WAS OBTAINED BY EXISTING DRAWINGS AND HAVE NOT BEEN COMPLETELY VERIFIED. ANY DISCREPANCIES BETWEEN DRAWINGS AND ACTUAL SITE CONDITIONS TO BE BROUGHT TO THE ATTENTION OF THE ENGINEER OF RECORD IN WRITING.

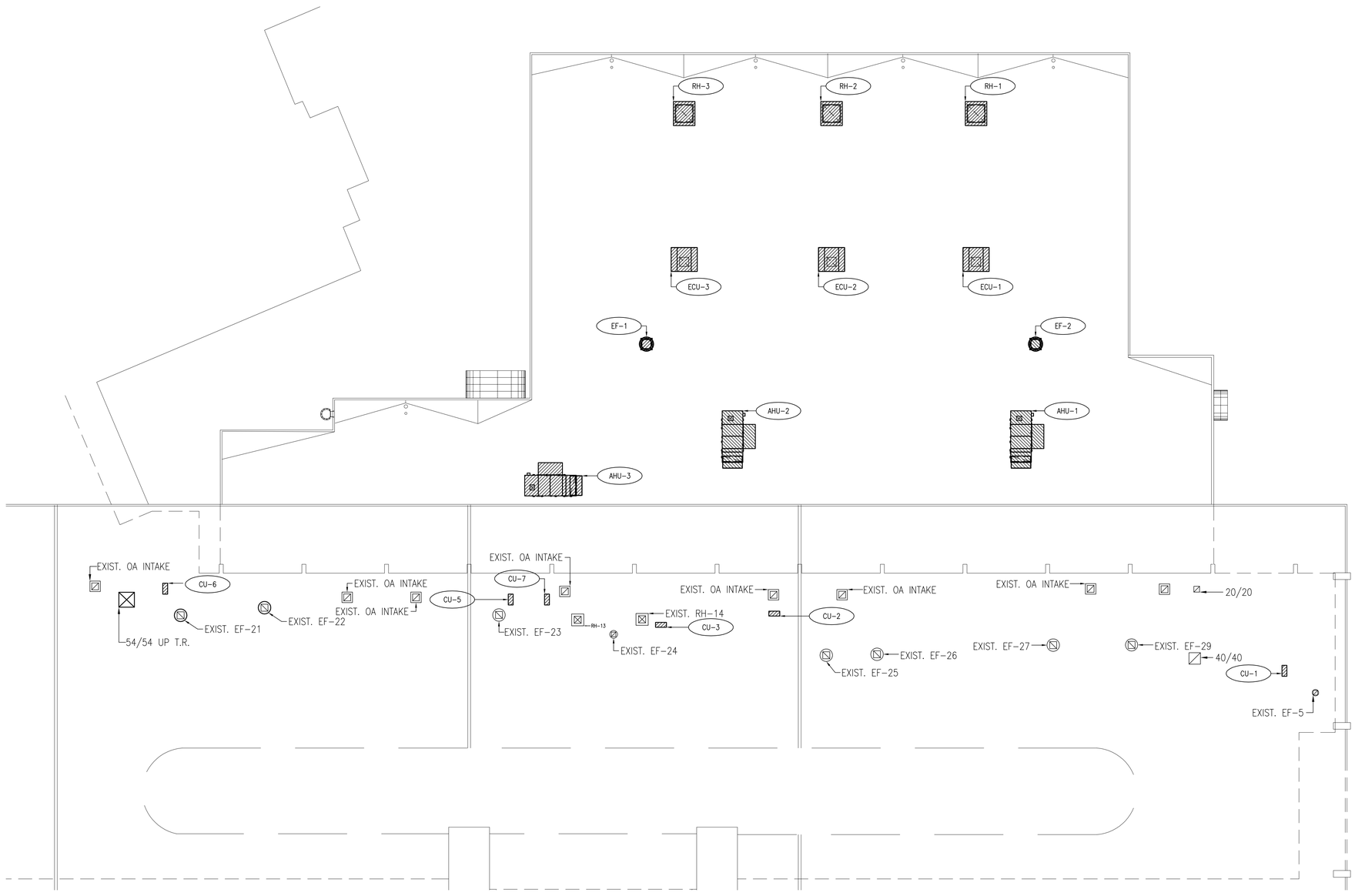

1 PARTIAL MECHANICAL ROOF PLAN - NEW WORK

SCALE:1/8"=1'-0"

TEXAS REGISTRATION: F-000014

Alegro Engineering
Consulting Engineers
5822 Cromo Dr., Suite 105
El Paso, Texas 79912
Tel. 915.533.0700

ALTERATION OF A SEALED DOCUMENT WITHOUT PROPER AUTHORIZATION IS A VIOLATION OF ENGINEERING PRACTICE ACT.

REFERENCES -- BENCHMARK

DATE	REVISIONS	BY

CONSULTANT'S NAME

mijares ● mora
ARCHITECTS INC.
EL PASO, TEXAS 79912
FAX: 542-1984
111 N. FESTIVAL
TEL: 915-542-1991

ARCHITECT'S SEAL

STATE OF TEXAS
ROLANDO LEGARRETA
84714
LICENSED
PROFESSIONAL ENGINEER
5/12/16

SCALE

DATE	MAY 2016
DESIGN BY	ALEGRO
DRAWN BY	GAG
CHKD. BY	GAG
APPD. BY	RL
JOB NO.	14-154

PROJECT NAME

EL PASO INTERNATIONAL AIRPORT
CHECKED BAGGAGE INSPECTION SYSTEM

6701 CONVAIR RD. EL PASO, TEXAS

EL PASO INTERNATIONAL AIRPORT

CITY OF EL PASO

KEY PLAN

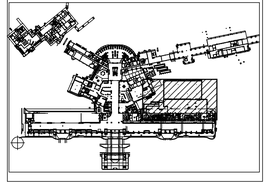

SHEET TITLE

PARTIAL MECHANICAL ROOF PLAN NEW WORK

M7.00

FILE NO. XXXX

SHEET 24 OF 34

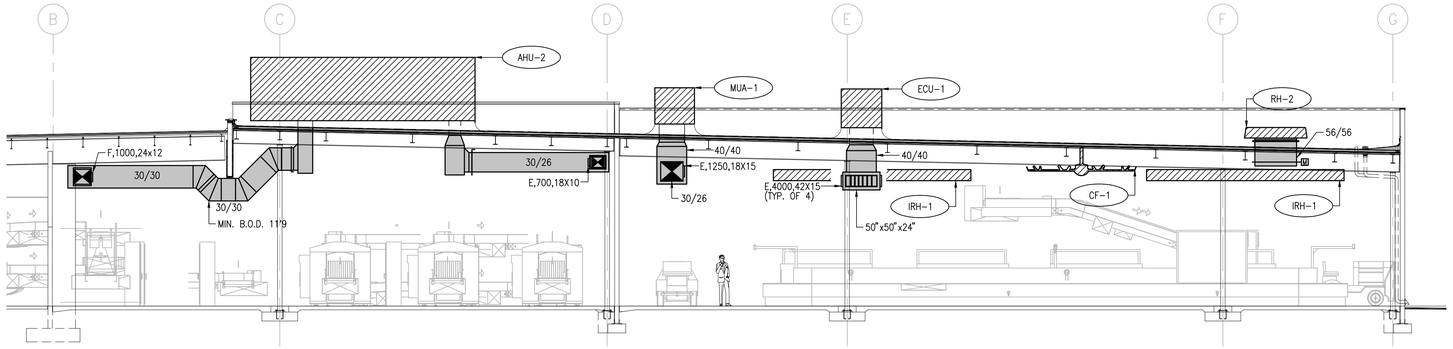

1 MECHANICAL SECTIONS

SCALE:1/8"=1'-0"

8' 4' 0 8' 16'

SCALE: 1/8" = 1'

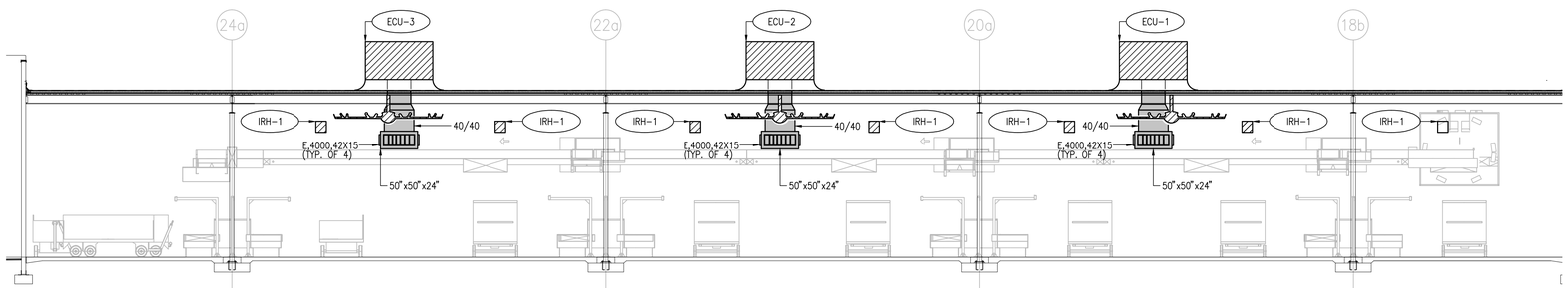

2 MECHANICAL SECTIONS

SCALE:1/8"=1'-0"

8' 4' 0 8' 16'

SCALE: 1/8" = 1'

TEXAS REGISTRATION: F-000014

Alegro Engineering
Consulting Engineers
5822 Cromo Dr, Suite 105
El Paso, Texas 79912
Tel. 915.533.0700

ALTERATION OF A SEALED DOCUMENT WITHOUT PROPER AUTHORIZATION IS A VIOLATION OF THE ENGINEER IS AN OFFENSE UNDER THE TEXAS ENGINEERING PRACTICE ACT.

REFERENCES -- BENCHMARK

DATE	REVISIONS	BY

CONSULTANT'S NAME

mijares ● mora
ARCHITECTS INC.
EL PASO, TEXAS 79912
111 N. FESTIVAL
TEL: 915-542-1984

ARCHITECT'S SEAL

STATE OF TEXAS
ROLANDO LEGARRETA
84714
LICENSED PROFESSIONAL ENGINEER
5/12/16

SCALE

DATE	MAY 2016
DESIGN BY	AEGRO
DRAWN BY	GAG
CHKD. BY	GAG
APPD. BY	RL
JOB NO.	14-154

PROJECT NAME

EL PASO INTERNATIONAL AIRPORT
CHECKED BAGGAGE INSPECTION SYSTEM

6701 CONVAIR RD. EL PASO, TEXAS

EL PASO INTERNATIONAL

CITY OF EL PASO

SHEET TITLE

MECHANICAL SECTIONS

M8.00

FILE NO. □□□□

SHEET 25 OF 3□

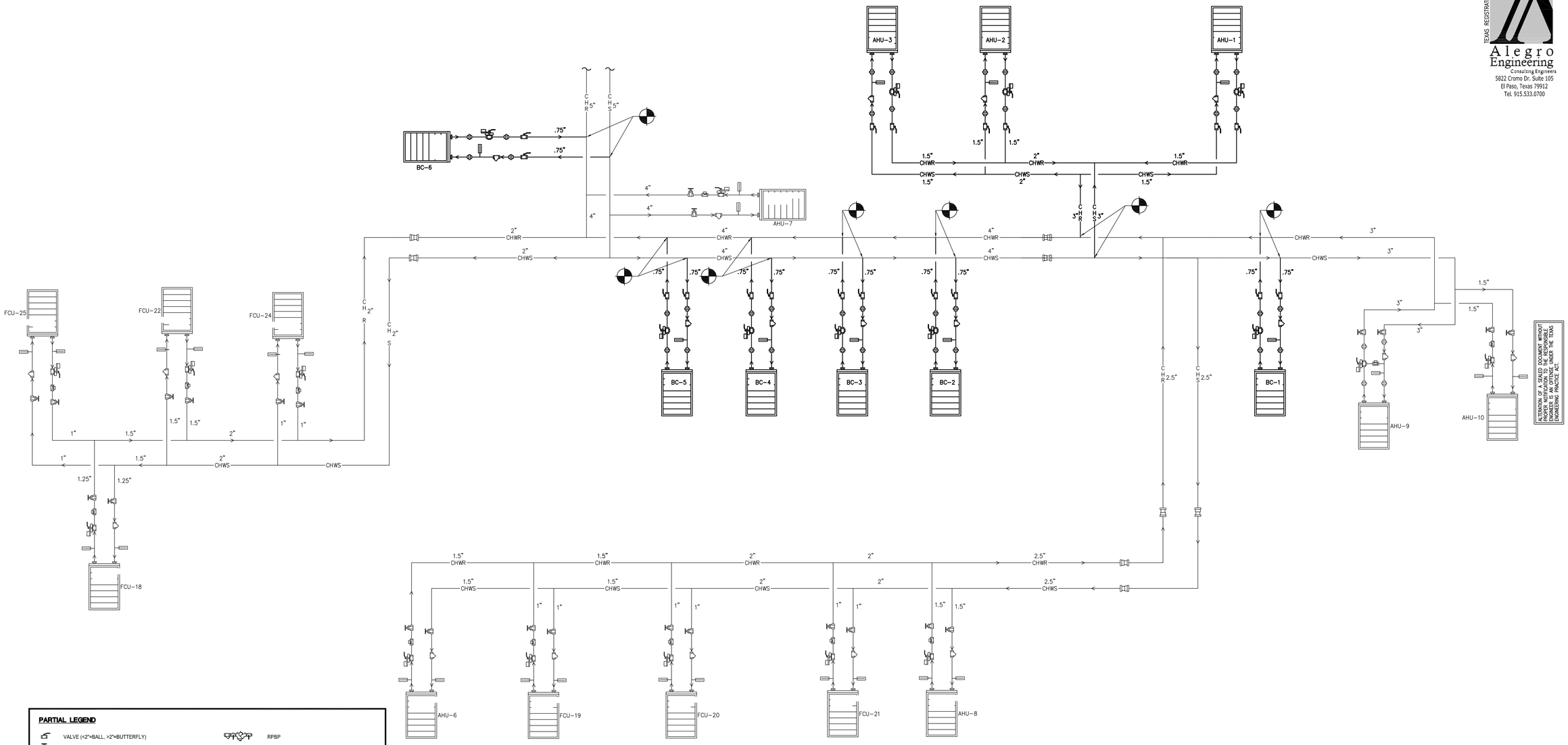

1 MECHANICAL CHILLED WATER SCHEMATIC DIAGRAM

NTS

PARTIAL LEGEND

- VALVE (<2"=BALL, >2"=BUTTERFLY)
- GATE VALVE
- PLUG COCK
- BUTTERFLY VALVE
- GLOBE VALVE
- CHECK VALVE
- TEMPERATURE AND PRESSURE TEST PORT - TTE, PTE
- FLANGE
- UNION
- STRAINER WITH BLOWDOWN VALVE
- BALANCING VALVE
- PRESSURE RELIEF VALVE
- VACUUM RELIEF VALVE
- AUTOMATIC AIR VENT
- 3-WAY CONTROL VALVE - CV
- 2-WAY CONTROL VALVE - CV
- PRESSURE GUAGE WITH SHUT-OFF COCK
- TEMPERATURE INDICATOR
- FLEXIBLE CONNECTOR
- GCHW CHILLED WATER W/ GLYCOL
- RPBP
- TRIPLE DUTY VALVE / MULTIPURPOSE VALVE
- DRAIN VALVE
- PRESSURE REDUCING VALVE
- P-1 PUMP W/ SUCTION DIFFUSER
- CFS CHEMICAL FEED SYSTEM
- ET-2 EXPANSION TANK
- ASC-1 AIR SEPARATOR
- CHILLED WATER COIL
- ECH-1 AIR COOLED CHILLER

TEXAS REGISTRATION: F-000014
Alegro Engineering
Consulting Engineers
5822 Cromo Dr. Suite 105
El Paso, Texas 79912
Tel. 915.533.0700

REFERENCES -- BENCHMARK

DATE	REVISIONS	BY

CONSULTANT'S NAME
mijares mora ARCHITECTS INC.
EL PASO, TEXAS 79912
FAX: 542-1984
111 N. FESTIVAL
TEL: 915-542-1991

ARCHITECT'S SEAL
STATE OF TEXAS
ROLANDO LEGARRETA
84714
LICENSED PROFESSIONAL ENGINEER

ALTERATION OF A SEALED DOCUMENT WITHOUT PROPER AUTHORIZATION IS A VIOLATION TO ENGINEER IS AN OFFENSE, UNDER THE TEXAS ENGINEERING PRACTICE ACT.

SCALE

DATE	MAY 2016
DESIGN BY	ALEGRO
DRAWN BY	GAG
CHKD. BY	GAG
APPD. BY	RL
JOB NO.	14-154

PROJECT NAME

EL PASO INTERNATIONAL AIRPORT CHECKED BAGGAGE INSPECTION SYSTEM

6701 CONVAIR RD. EL PASO, TEXAS

EL PASO INTERNATIONAL

CITY OF EL PASO

SHEET TITLE

SCHEMATIC DIAGRAM

M9.00

FILE NO. XXXX

SHEET 26 OF 34

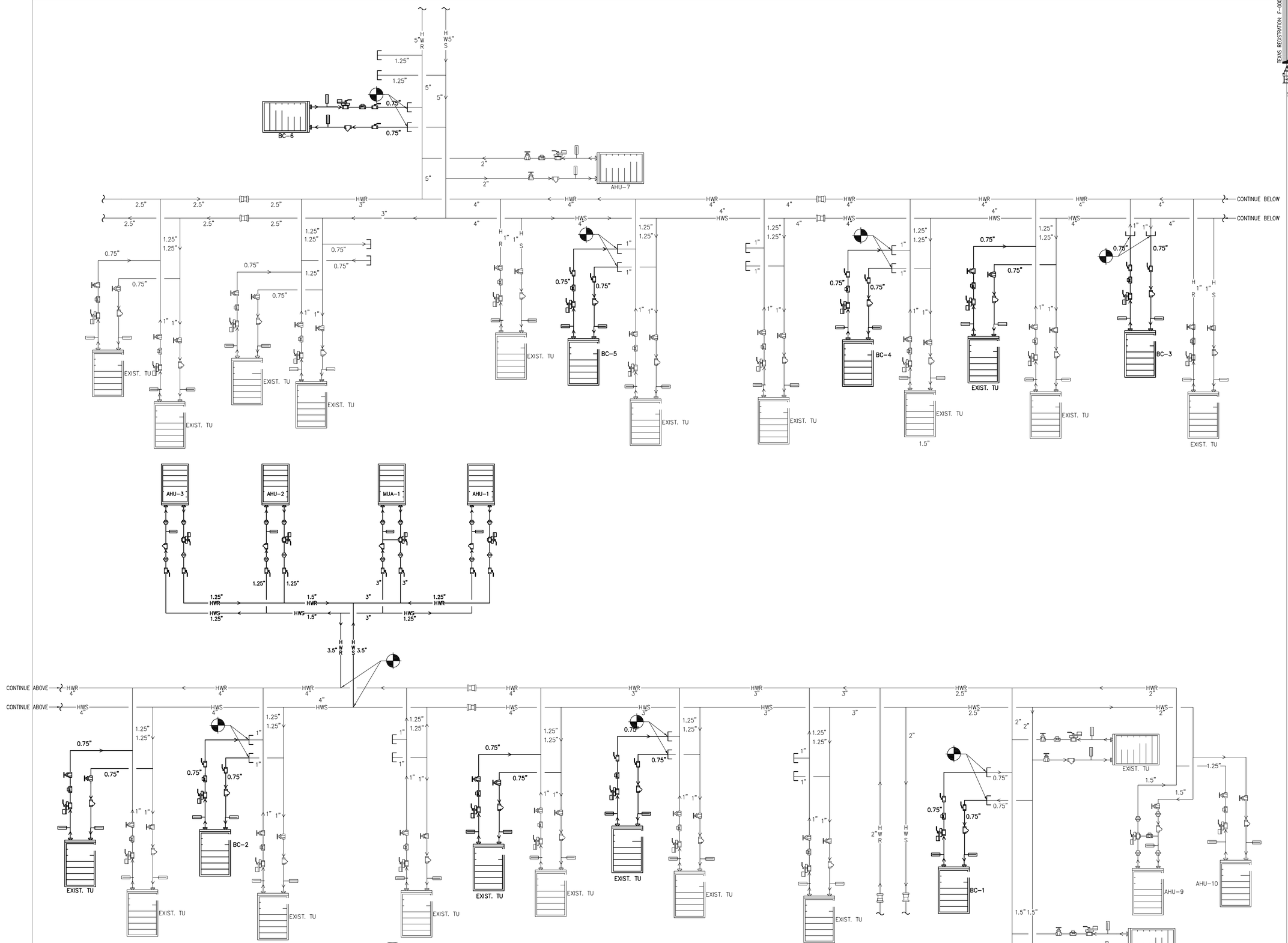

1 MECHANICAL HOT WATER SCHEMATIC DIAGRAM

NTS

TEXAS REGISTRATION: F-000014
Alegro Engineering
Consulting Engineers
5822 Cromo Dr., Suite 105
El Paso, Texas 79912
Tel. 915.533.0700

ALTERATION OF A SEALED DOCUMENT WITHOUT THE CONSENT OF THE ARCHITECT OR ENGINEER IS AN OFFENSE, UNDER THE TEXAS ENGINEERING PRACTICE ACT.

REFERENCES -- BENCHMARK

DATE	REVISIONS	BY

CONSULTANT'S NAME

mijares ● mora
ARCHITECTS INC.
D. PASO, TEXAS 79912
111 N. FESTIVAL
TEL: 915-542-1991
FAX: 542-1994

ARCHITECT'S SEAL

STATE OF TEXAS
ROLANDO LEGARRETA
84714
LICENSED
PROFESSIONAL ENGINEER

SCALE

DATE	MAY 2016
DESIGN BY	AEGRO
DRAWN BY	GAG
CHKD. BY	GAG
APPD. BY	RL
JOB NO.	14-154

PROJECT NAME

EL PASO INTERNATIONAL AIRPORT
CHECKED BAGGAGE INSPECTION SYSTEM

6701 CONVAIR RD. EL PASO, TEXAS

EL PASO INTERNATIONAL

CITY OF EL PASO

SHEET TITLE

SCHEMATIC EXIST. TUIAGRAM

M9.01

FILE NO. XXXX

SHEET 27 OF 34

SYSTEM: HEATING MAKE-UP AIR UNIT

POINT	INPUT		OUTPUT	
	DIGITAL	ANALOG	DIGITAL	ANALOG
1				D–1
2	A–11			
3	A–8			
4	A–4			
5	A–9			
6		B–3		
7				D–2
8		B–5		
9			C–1	
10	A–10			
11				
12			C–3	
13		B–14		
14	A–11			

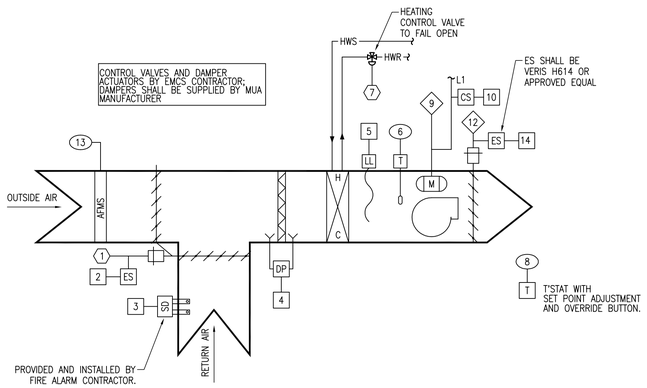

MAKE-UP AIR-HOT WATER
SEQUENCE OF OPERATIONS

START/STOP:
THE BUILDING EMCS SHALL INITIATE START/STOP CONTROL OF THE MUA BY PROGRAMMED INPUT, OR OPERATOR OVERRIDE CONTROL.

FAN STATUS:
PROOF OF THE FAN OPERATION SHALL BE INDICATED BY A CURRENT SWITCH MOUNTED ACROSS ONE PHASE OF THE POWER WIRING TO THE MOTOR. ON AN ENABLE SIGNAL FROM THE EMCS TO ENERGIZE THE MUA, THE SUPPLY AIR DAMPER SHALL FULLY OPEN. THE MAKE-UP AIR UNIT MOTORS, WITH ONE (1) MINUTE DELAY, SHALL BE ALLOWED TO START.

MINIMUM OUTSIDE AIR VENTILATION:
THE OUTSIDE AND RETURN AIR DAMPERS SHALL BE MODULATED BY 1 ANALOG OUTPUT. WHEN IN THE OCCUPIED MODE, THE CONTROLLER SHALL MEASURE THE OUTSIDE AIRFLOW AND MODULATE THE OUTSIDE AIR DAMPERS TO MAINTAIN THE PROPER MINIMUM OUTSIDE AIR VENTILATION, OVERRIDING NORMAL DAMPER CONTROL. ON DROPPING OUTSIDE AIRFLOW, THE CONTROLLER SHALL MODULATE THE OUTSIDE AIR DAMPERS OPEN TO MAINTAIN THE OUTSIDE AIRFLOW SETPOINT (ADJ.).

HEATING COIL CONTROL:
EMS SHALL MODULATE A HOT WATER CONTROL VALVE IN THE HOT WATER RETURN LINE TO MAINTAIN THE ZONE HEATING TEMPERATURE SETPOINT (ADJ.) WHEN THE ZONE TEMPERATURE IS HIGHER THAN THE SETPOINT , THE CONTROL VALVE SHALL MODULATE CLOSED. THE CONTROL VALVE SHALL FULLY CLOSE WHEN THE AHU FAN IS OFF, UNLESS THE UNIT IS IN UNOCCUPIED FREEZE PROTECTION MODE (SEE BELOW). IN UNOCCUPIED FREEZE PROTECTION, THE VALVE SHALL BE OPEN 50%. THE EMS SHALL ALARM IF THE ZONE TEMPERATURE VARIES BEYOND FOUR (4°) DEGREES F FROM SETPOINT.

THE HEATING SHALL BE ENABLED WHENEVER:
1) OUTSIDE AIR TEMPERATURE IS LESS THAN 67°F (ADJ.).
2) AND THE SUPPLY FAN STATUS IS ON.
3) AND THE COOLING (IF PRESENT) IS NOT ACTIVE.

THE HEATING COIL VALVE SHALL OPEN WHENEVER:
1) THE FREEZESTAT (IF PRESENT) IS ON

FREEZE PROTECTION CONTROL:
UNOCCUPIED FREEZE PROTECTION: IF OAT < 38°F DURING THE UNOCCUPIED PERIOD, AND THERE IS NO FAN STATUS, THE HW VALVE OPEN 50% AND THE CENTRAL PLANT PUMPS SHALL RUN

AS THE SUPPLY AIR TEMPERATURE REACHES 45°F (ADJ.) AND AGAIN AT 40°F (ADJ.), AN ALARM SHALL TRANSMIT THROUGH THE EMS. THE FREEZE STAT LOCATED DOWNSTREAM OF THE HEATING COIL (HARWIRED WITH RESET) SHALL TRIP AT 35°F AND INDEPENDENTLY OF THE EMS, INITIATE THE FOLLOWING ACTIONS:
1) CLOSE THE OUTSIDE AIR DAMPERS
2) DE-ENERGIZE AND SHUTDOWN THE AHU FAN
3) FULLY OPEN THE CHILLED WATER AND HEATING COIL CONTROL VALVES FOR FULL FLOW TO THE COIL
4) ENERGIZE AN ALARM THROUGH THE EMS AT ALL OPERATOR'S WORKSTATIONS.

CLOGGED FILTER ALARM:
THE FILTER SECTION (PRE-FILTER AND FINAL FILTER) SHALL HAVE A SINGLE DIFFERENTIAL PRESSURE SWITCH MOUNTED ACROSS THE BOTH FILTER BANKS. THE DIFFERENTIAL PRESSURE SWITCH SHALL BE SET TO SET AT EACH OF THE OPERATOR'S WORKSTATION AN ALARM INDICATING THAT FILTERS HAVE TO BE REPLACED OR FILTERS HAVE TO BE CLEANED WHEN EACH FILTER SECTION REACHES THE MAXIMUM ALLOWABLE PRESSURE DROP (ADJ.)

AUTOMATIC SHUTDOWN CONTROL:
IF REQUIRED, UPON DETECTION OF SMOKE AT ANY DUCT MOUNTED SMOKE DETECTOR (FURNISHED AND INSTALLED BY DIVISION 26) IN THE SUPPLY AND/OR RETURN DUCTWORK CONNECTED TO THE AHU. THE AHU MOTOR SHALL BE STOPPED AND AUTOMATIC DAMPERS ON THE OUTSIDE AIR AND RETURN AIR SHALL CLOSE AND RETURN AIR DAMPER SHALL BE OPENED.

1 MAKE-UP AIR UNIT
N.T.S.

SYSTEM: EVAPORATIVE COOLERS

POINT	INPUT		OUTPUT	
	DIGITAL	ANALOG	DIGITAL	ANALOG
1			C–1	
2			C–3	
3	A–11			
4			C–3	

SEQUENCE OF OPERATION
EVAPORATIVE COOLERS/RELIEF FANS

ON/OFF

THE BUILDING ENERGY MONITORING AND CONTROL SYSTEM (EMCS) SHALL INITIATE ON/OFF CONTROL OF THE EVAPORATIVE COOLING AND RELIEF HOOD MOTORIZED DAMPER UNITS BY PROGRAMMED INPUT, TIMED OVERRIDE, OR OPERATOR OVERRIDE CONTROL. ONCE EVAPORATIVE COOLER IS TURNED ON BY THE EMCS, THE SPACE OPERATOR SHALL HAVE CONTROL TO START/STOP THE UNIT AND TURN WATER ON/OFF; RELIEF HOOD MOTORIZED DAMPERS FANS SHALL OPERATE SIMULTANEOUSLY TO EVAPORATIVE COOLER FAN TO MAINTAIN SLIGHTLY POSITIVE PRESSURE IN THE SPACE.

FAN STATUS

PROOF OF OPERATION SHALL BE INDICATED BY A CURRENT SWITCH IN FAN(S) MOTOR LEADS OF THE POWER WIRING TO THE FAN/ECU UNIT.

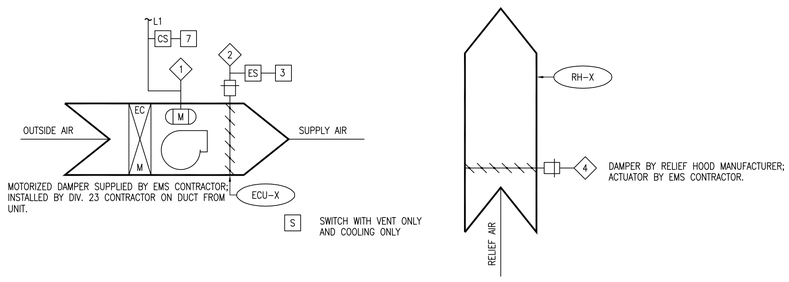

2 EVAP. COOLER OPERATION
N.T.S.

CONTROL POINT DESIGNATION

DIGITAL INPUT

MARK	DESCRIPTION
A–1	MONITOR DRY CONTACTS
A–2	MONITOR PULSE
A–3	PRESSURE DIFFERENTIAL SWITCH – WATER
A–4	PRESSURE DIFFERENTIAL SWITCH – AIR
A–5	WATER FLOW SWITCH
A–6	AIR FLOW SWITCH
A–7	DAMPER END SWITCH
A–8	SMOKE DETECTOR AUXILIARY CONTACTS
A–9	TEMPERATURE SAFETY SWITCH
A–10	CURRENT SWITCH
A–11	END SWITCH
A–12	FLOAT SWITCH
A–13	OCCUPANCY SENSOR
A–14	MOTOR RELAY

ANALOG INPUT

MARK	DESCRIPTION
B–1	TEMPERATURE SENSOR IN THERMOWELL (0–100 DEGREES F)
B–2	TEMPERATURE SENSOR IN THERMOWELL (32–212 DEGREES F)
B–3	DUCT MOUNTED TEMPERATURE SENSOR, AVERAGING TYPE (32–120 DEGREES F)
B–4	OUTSIDE AIR TEMPERATURE SENSOR (–40–120 DEGREES F)
B–5	SPACE TEMPERATURE SENSOR (32–100 DEGREES F)
B–6	DUCT MOUNTED RELATIVE HUMIDITY SENSOR (5–95%)
B–7	STATIC PRESSURE SENSOR, DUCT MOUNTED
B–8	DIFFERENTIAL PRESSURE SENSOR, AIR
B–9	DIFFERENTIAL PRESSURE SENSOR, WATER
B–10	PRESSURE SENSOR, WATER
B–11	0–10 VOLT SIGNAL
B–12	4–20 mA SIGNAL
B–13	AIR FLOW MEASURING STATION (TERMINAL UNITS)
B–14	AIR FLOW MEASURING STATION
B–15	WATER FLOW MEASURING STATION
B–16	STATIC PRESSURE SENSOR, SPACE
B–17	SPACE RELATIVE HUMIDITY SENSOR (30–80%)
B–18	OUTSIDE AIR RELATIVE HUMIDITY SENSOR (5–100%)
B–19	CARBON DIOXIDE SENSOR
B–20	DAMPER POSSITION FEEDBACK
B–21	BUILDING PRESSURE SENSOR

DIGITAL OUTPUT

MARK	DESCRIPTION
C–1	START/STOP
C–2	ON/OFF
C–3	OPEN/CLOSED

ANALOG OUTPUT

MARK	DESCRIPTION
D–1	0–10 VDC OR 4–20 mA SIGNAL TO DAMPER ACTUATOR
D–2	0–10 VDC OR 4–20 mA SIGNAL TO BALL VALVE ACTUATOR
D–3	0–10 VDC OR 4–20 mA SIGNAL TO VARIABLE SPEED DRIVE CONTROLLER
D–4	0–10 VDC OR 4–20 mA SIGNAL TO ELECTRIC HEATING COIL CONTROLLER

CONTROLS SYMBOL LEGEND

	DIGITAL INPUT
	DIGITAL OUTPUT
	ANALOG INPUT
	ANALOG OUTPUT
C C	CHILLED WATER COIL
H C	HOT WATER COIL
EC M	EVAPORATIVE COOLING MODULE
MG M	NATURAL GAS METER
	AIR FILTER
DP	DIFFERENTIAL PRESSURE SWITCH
A F M S	AIRFLOW MONITORING STATION
T	ROOM THERMOSTAT
H	ROOM HUMIDISTAT
	DAMPER END SWITCH
	AUTOMATIC DAMPER
FS	WATER FLOW SWITCH
LW	BOILER LOW-WATER CUTOFF
P	WATER PRESSURE SENSOR
FL	AUXILIARY DRAIN PAN FLOAT SWITCH
	FAN
	PUMP
	VENTURI FLOW METER
FM	INSERTION TYPE TURBINE FLOW METER
	CONTROL VALVE (3-WAY)
	CONTROL VALVE (2-WAY)
M	MOTOR OPERATED VALVE
	DUCT WORK
S	SOLENOID VALVE
	TEST PLUG
DP	DIFFERENTIAL TRANSMITTER
SD	SMOKE DETECTOR DUCT MOUNTED (BY DIV. 16)
	DAMPER ACTUATOR
TS	TEMPERATURE SENSOR IN THERMOWELL
	ELECTRIC SIGNAL
H	OUTSIDE AIR HUMIDITY SENSOR
HS H	HIGH STATIC CUT OUT
MS	MOTOR STARTER
SP	STATIC PRESSURE SENSOR
CS	CURRENT SWITCH
	2-WAY BUTTERFLY CONTROL VALVE
FM	WATER FLOW METER
LL	LOW LIMIT THERMOSTAT
FS	FIRESTAT
T	TEMPERATURE SENSOR
T	TEMPERATURE TRANSMITTER W/ AVERAGING ELEMENT
CO	CARBON DIOXIDE SENSOR
T	TEMPERATURE TRANSMITTER W/ BULB ELEMENT
T	OUTSIDE AIR TEMPERATURE SENSOR
M	ELECTRIC MOTOR
H	HUMIDITY SENSOR
H	HUMIDIFIER
VFD	VARIABLE FREQUENCY DRIVE
H	DUCT MOUNTED HUMIDISTAT
R	RELAY
PS	PRESSURE SWITCH
O	ROOM OCCUPANCY SENSOR
HL	HIGH LIMIT THERMOSTAT
ES	END SWITCH
PF	POSITION FEEDBACK

TEXAS REGISTRATION: F-000014
Alegro Engineering
Consulting Engineers
5822 Cromo Dr. Suite 105
El Paso, Texas 79912
Tel. 915.533.0700

REFERENCES – BENCHMARK

DATE	REVISIONS	BY

CONSULTANT'S NAME
mijares ● mora
ARCHITECTS INC.
EL PASO, TEXAS 79912
111 N. FESTIVAL
TEL: 915-542-1991 FAX: 542-1994

ALTERATION OF A SEALED DOCUMENT WITHOUT THE SEAL OF A LICENSED PROFESSIONAL ENGINEER IS AN OFFENSE, UNDER THE TEXAS ENGINEERING PRACTICE ACT.

ARCHITECT'S SEAL
STATE OF TEXAS
ROLANDO LEGARRETA
84714
LICENSED PROFESSIONAL ENGINEER
5/24/15

SCALE

DATE	MAY 2016
DESIGN BY	AEGRO
DRAWN BY	GAG
CHKD. BY	GAG
APPD. BY	RL
JOB NO.	14-154

PROJECT NAME
EL PASO INTERNATIONAL AIRPORT
CHECKED BAGGAGE INSPECTION SYSTEM
8701 CONVAIR RD. EL PASO, TEXAS
EL PASO INTERNATIONAL AIRPORT

CITY OF EL PASO

SHEET TITLE
MECHANICAL CONTROLS

M10.00

FILE NO. XXXX

SHEET 28 OF 34

CV AHU
SEQUENCE OF OPERATIONS

SA DAMPER CONTROL:
THE EMS SHALL COMMAND THE SUPPLY AIR DAMPER SHALL OPEN PRIOR TO THE UNIT STARTING. ONCE THE DAMPER IS OPEN AS DETERMINED BY THE DAMPER ACTUATOR END SWITCH, THE UNIT SHALL BE ALLOWED TO OPERATE.

AHU START/STOP:
THE EMS SHALL INITIATE START/STOP CONTROL OF THE AIR HANDLING UNIT SUPPLY FAN BY PROGRAMMED INPUT, TIMED OVERRIDE, OR OPERATOR OVERRIDE CONTROL. PROVIDE OPTIMIZATION FOR START/STOP OF EQUIPMENT.

FAN STATUS:
ONCE FLOW IS PROVEN BY THE CURRENT SWITCH, THE OA AND RA DAMPERS WILL POSITION AS INDICATED BELOW, AND THE COOLING OR HEATING COIL AND UNIT CONTROLS SHALL BE ACTIVATED. VFD(S) SHALL PROVIDE FREQUENCY, AND FAULT FEEDBACK.

OCCUPANCY TEMPERATURE SETBACKS:
WHEN THE ZONE IS OCCUPIED AS DETERMINED BY THE OCCUPANCY SENSOR, THE AHU SET POINTS SHALL BE 75°F COOLING AND 68°F HEATING (BOTH ADJUSTABLE). WHEN THE SPACE IS NOT IN USE/OCCUPIED DURING REGULAR OPERATION AS INDICATED BY THE OCCUPANCY SENSOR, THE AHU SHALL RUN IN ACTIVE/UNOCCUPIED MODE, SETTING BACK TEMPERATURES TO 80°F COOLING AND 63°F HEATING. WHEN THE OCCUPANCY SENSORS INDICATES SPACE IS OCCUPIED, THE UNIT SHALL REVERT TO NORMAL OPERATION.

SUPPLY FAN CONTROL:
THE SUPPLY AIR FAN SPEED SHALL BE MODULATED USING A VARIABLE FREQUENCY DRIVE TO MAINTAIN THE ZONE TEMPERATURE. IF THE UNIT IS IN COOLING MODE, THE VFD SHALL START AT ITS MINIMUM SPEED AND INCREASE AS DETERMINED BY PID CONTROL. THE SAME SHALL HAPPEN IN THE HEATING MODE. IF THE ZONE IS SATISFIED, THE FAN SHALL RUN AT MINIMUM SPEED. MINIMUM SPEED SHALL BE DETERMINED BY SPACE CO2 SENSOR.

BUILDING PRESSURE CONTROL
RETURN/RELIEF AIR FAN VARIABLE FREQUENCY DRIVE AND RELIEF AIR DAMPER SHALL MODULATE IN SEQUENCE TO MAINTAIN POSITIVE PRESSURE OF 0.05"W.C. (ADJ) WHENEVER THE BUILDING IS OCCUPIED. THE RETURN AIR FAN SHALL REMAIN OFF AND THE RELIEF DAMPER CLOSED DURING UNOCCUPIED MODE

ECONOMIZER CONTROL:
THE CONTROLLER SHALL MEASURE THE MIXED AIR TEMPERATURE AND MODULATE THE RETURN AND OUTSIDE AIR DAMPERS IN SEQUENCE TO MAINTAIN A SETPOINT 2°F (ADJ.) LESS THAN THE SUPPLY AIR TEMPERATURE SETPOINT.
THE ECONOMIZER SHALL BE ENABLED WHENEVER:
1) OUTSIDE AIR TEMPERATURE IS LESS THAN 65°F (ADJ.)
2) AND THE OUTSIDE AIR TEMPERATURE IS LESS THAN THE RETURN AIR TEMPERATURE.
3) AND THE SUPPLY FAN STATUS IS ON.

THE ECONOMIZER SHALL CLOSE WHENEVER:
1) MIXED AIR TEMPERATURE DROPS FROM 40°F TO 35°F (ADJ.)
2) OR THE FREEZESTAT (IF PRESENT) IS ON.
3) OR ON LOSS OF SUPPLY FAN STATUS.

THE OUTSIDE/ EXHAUST AIR DAMPERS SHALL CLOSE AND THE RETURN AIR DAMPER SHALL OPEN WHEN THE UNIT IS OFF.

MINIMUM OUTSIDE AIR VENTILATION:
WHEN IN THE OCCUPIED MODE, THE CONTROLLER SHALL MEASURE THE OUTSIDE AIRFLOW AND MODULATE THE OUTSIDE AIR DAMPERS TO MAINTAIN THE PROPER MINIMUM OUTSIDE AIR VENTILATION, OVERRIDING NORMAL DAMPER CONTROL. THE MINIMUM OA SETPOINT SHALL BE RESET BASED ON CO2. ON DROPPING OUTSIDE AIRFLOW, THE CONTROLLER SHALL MODULATE THE OUTSIDE AIR DAMPERS OPEN TO MAINTAIN THE OUTSIDE AIRFLOW SETPOINT (ADJ.).

SUPPLY AIR TEMPERATURE SETPOINT:
THE CONTROLLER SHALL MONITOR THE SUPPLY AIR TEMPERATURE AND SHALL MAINTAIN A SUPPLY AIR TEMPERATURE SETPOINT RESET BASED ON ZONE COOLING AND HEATING REQUIREMENTS

THE SUPPLY AIR TEMPERATURE SETPOINT SHALL BE RESET BASED ON ZONE REQUIREMENTS AS FOLLOWS:
1) THE SUPPLY AIR TEMPERATURE SETPOINT SHALL BE 72°F (ADJ.) WHEN THE ZONE IS SATISFIED.
2) AS COOLING DEMAND INCREASES AS DETERMINED BY THE ZONE PID, THE SETPOINT SHALL INCREMENTALLY RESET DOWN TO A MINIMUM OF 53°F (ADJ.).
3) AS HEATING DEMAND INCREASES AS DETERMINED BY THE ZONE PID, THE SETPOINT SHALL INCREMENTALLY RESET UP TO A MAXIMUM OF 120°F (ADJ.)

COOLING COIL CONTROL:
THE EMS SHALL MODULATE A 2-WAY CHILLED WATER VALVE IN THE CHILLED WATER RETURN LINE TO MAINTAIN THE OPTIMIZED SUPPLY AIR SETPOINT. WHEN THE AHU AIR TEMPERATURE IS LESS THAN THE SETPOINT TEMPERATURE, THE CONTROL VALVE SHALL MODULATE CLOSE. THE CONTROL VALVE SHALL FULLY CLOSE WHEN THE AHU IS OFF UNLESS THE UNIT IS IN UNOCCUPIED FREEZE PROTECTION MODE (SEE BELOW). IN UNOCCUPIED FREEZE PROTECTION, THE VALVE SHALL BE OPEN 50% THE EMS SHALL GENERATE AN ALARM IF THE DISCHARGE TEMPERATURE VARIES BEYOND FOUR (4) ° FROM SETPOINT.

THE COOLING SHALL BE ENABLED WHENEVER:
1) OUTSIDE AIR TEMPERATURE IS GREATER THAN 60°F (ADJ.).
2) AND THE ECONOMIZER (IF PRESENT) IS DISABLED OR FULLY OPEN.
3) AND THE SUPPLY FAN STATUS IS ON.
4) AND THE HEATING (IF PRESENT) IS NOT ACTIVE.

HEATING COIL CONTROL:
EMS SHALL MODULATE A 2-WAY HOT WATER CONTROL VALVE IN THE HOT WATER RETURN LINE TO MAINTAIN THE OPTIMIZED SUPPLY AIR SETPOINT (ADJ.) WHEN THE AHU DISCHARGE AIR TEMPERATURE IS HIGHER THAN THE SETPOINT TEMPERATURE, THE CONTROL VALVE SHALL MODULATE CLOSED. THE CONTROL VALVE SHALL FULLY CLOSE WHEN THE AHU FAN IS OFF, UNLESS THE UNIT IS IN UNOCCUPIED FREEZE PROTECTION MODE (SEE BELOW). IN UNOCCUPIED FREEZE PROTECTION, THE VALVE SHALL BE OPEN 50%. THE EMS SHALL ALARM IF THE DISCHARGE TEMPERATURE VARIES BEYOND FOUR (4°) DEGREES F FROM SETPOINT.

THE HEATING SHALL BE ENABLED WHENEVER:
1) OUTSIDE AIR TEMPERATURE IS LESS THAN 60°F (ADJ.).
2) AND THE SUPPLY FAN STATUS IS ON.
3) AND THE COOLING (IF PRESENT) IS NOT ACTIVE.

THE HEATING COIL VALVE SHALL OPEN WHENEVER:
1) THE FREEZESTAT (IF PRESENT) IS ON

FREEZE PROTECTION CONTROL:
UNOCCUPIED FREEZE PROTECTION: IF OAT < 38°F DURING THE UNOCCUPIED PERIOD, AND THERE IS NO FAN STATUS, THE HW AND CHW VALVES OPEN 50% AND THE CENTRAL PLANT PUMPS SHALL RUN

AS THE SUPPLY AIR TEMPERATURE REACHES 45°F (ADJ.) AND AGAIN AT 40°F (ADJ.), AN ALARM SHALL TRANSMIT THROUGH THE EMS. THE FREEZE STAT LOCATED DOWNSTREAM OF THE HEATING COIL (HARWIRED WITH RESET) SHALL TRIP AT 35°F AND INDEPENDENTLY OF THE EMS, INITIATE THE FOLLOWING ACTIONS:
1) CLOSE THE OUTSIDE AIR DAMPERS
2) DE-ENERGIZE AND SHUTDOWN THE AHU FAN
3) FULLY OPEN THE CHILLED WATER AND HEATING COIL CONTROL VALVES FOR FULL FLOW TO THE COIL
4) ENERGIZE AN ALARM THROUGH THE EMS AT ALL OPERATOR'S WORKSTATIONS.

SPACE SETBACK TEMPERATURE CONTROL (UNOCCUPIED MODE):
THE EMS SHALL INITIATE SPACE TEMPERATURE SETBACK BY PROGRAMMED INPUT, TIME OVERRIDE, OR OPERATOR OVERRIDE CONTROL. DURING UNOCCUPIED MODE, IF THE ZONE TEMPERATURE RISES ABOVE 85°F OR FALLS BELOW 55°F, THE AHU SHALL RUN AS DESCRIBED ABOVE. DURING UNOCCUPIED MODE, THE OUTSIDE AIR DAMPER SHALL REMAIN CLOSED, AND THE RETURN AIR DAMPER SHALL BE FULLY OPEN.

ZONE OPTIMAL START:
THE UNIT SHALL USE A LEARNING OPTIMAL START ALGORITHM FOR MORNING START-UP. THIS ALGORITHM SHALL MINIMIZE THE UNOCCUPIED WARM-UP OR COOL-DOWN PERIOD WHILE STILL ACHIEVING COMFORT CONDITIONS BY THE START OF SCHEDULED OCCUPIED PERIOD. ALGORITHM SHALL:
1) COMPARE INDOOR TEMPERATURE TO OUTDOOR TEMPERATURE,
2) CONSIDER THE ASHRAE DESIGN HEATING AND COOLING CAPACITIES TO DETERMINE THE LEARNED HEATING AND COOLING CAPACITY (IN DEG/HR) FOR EACH ZONE.
3) THE ALGORITHM WILL CALCULATE A CURVE FROM THE UNOCCUPIED SETPOINTS TO THE OCCUPIED SETPOINTS TO ENSURE THAT THE ZONE IS AT TEMPERATURE AT THE DEFINED OCCUPIED TIME.

CLOGGED FILTER ALARM:
THE FILTER SECTION (PRE-FILTER AND FINAL FILTER) SHALL HAVE A SINGLE DIFFERENTIAL PRESSURE SWITCH MOUNTED ACROSS THE BOTH FILTER BANKS. THE DIFFERENTIAL PRESSURE SWITCH SHALL BE SET TO SET AT EACH OF THE OPERATOR'S WORKSTATION AN ALARM INDICATING THAT FILTERS HAVE TO BE REPLACED OR FILTERS HAVE TO BE CLEANED WHEN EACH FILTER SECTION REACHES THE MAXIMUM ALLOWABLE PRESSURE DROP (ADJ.)

AUTOMATIC SHUTDOWN CONTROL:
IF REQUIRED, UPON DETECTION OF SMOKE AT ANY DUCT MOUNTED SMOKE DETECTOR (FURNISHED AND INSTALLED BY DIVISION 26) IN THE SUPPLY AND/OR RETURN DUCTWORK CONNECTED TO THE AHU. THE AHU MOTOR SHALL BE STOPPED AND AUTOMATIC DAMPERS ON THE OUTSIDE AIR AND RETURN AIR SHALL CLOSE AND RETURN AIR DAMPER SHALL BE OPENED.

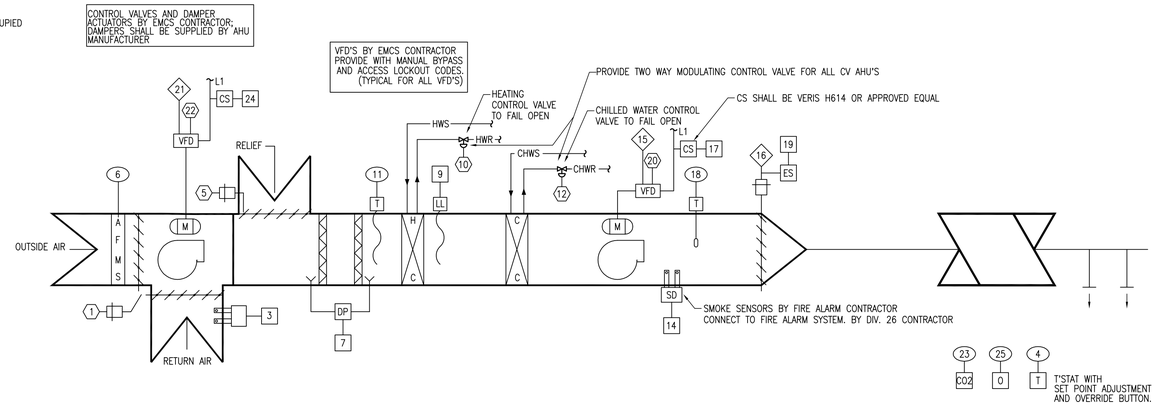

1 CONSTANT AIR VOLUME AIR HANDLING UNIT
N.T.S. (AHU-1,2,3)

CONSTANT VOLUME AIR HANDLING UNIT

POINT	INPUT		OUTPUT	
	DIGITAL	ANALOG	DIGITAL	ANALOG
1				D-1
2				
3	A-7			
4		B-5		
5				D-1
6		B-14		
7	A-4			
8				
9	A-9			
10				D-2
11		B-3		
12				D-2
13	A-4			
14	A-8			
15			C-1	
16			C-3	
17	A-10			
18		B-3		
19	A-11			
20				D-3
21			C-1	
22				D-3
23		B-19		
24	A-10			
25	A-13			

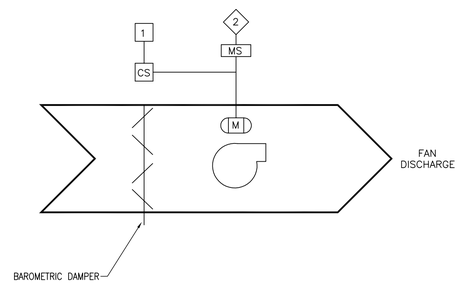

2 FANS (MISCELLANEOUS)
N.T.S. (TYP. OF EF-X)

SEQUENCE OF OPERATION
MISCELLANEOUS FANS

START/STOP

THE BUILDING ENERGY MONITORING AND CONTROL SYSTEM (EMCS) SHALL INITIATE START/STOP CONTROL OF THE FAN BY PROGRAMMED INPUT, TIMED OVERRIDE, OR OPERATOR OVERRIDE CONTROL. UPON INITIATION OF THE START SEQUENCE THE TWO POSITION AUTOMATIC DAMPER SHALL OPEN PRIOR TO FAN START. UPON INITIATION OF THE STOP SEQUENCE THE AUTOMATIC DAMPER SHALL CLOSE 10 SECONDS AFTER THE FAN MOTOR HAS BEEN GIVEN THE STOP SIGNAL. FAN SHUTDOWN BASED ON SMOKE DETECTION SHALL BE PROGRAMMED FOR EACH FAN MOVING IN EXCESS OF 2,000 CFM.

FAN STATUS

PROOF OF FAN OPERATION SHALL BE INDICATED BY A CURRENT SWITCH IN FAN MOTOR LEADS OF THE POWER WIRING TO THE FAN.

FIRE ALARM OVERRIDE

UPON RECEIPT OF A SIGNAL FROM THE BUILDING FIRE ALARM AND SMOKE DETECTION SYSTEM THAT SMOKE AND/OR FIRE HAS BEEN DETECTED, THE FAN SHALL START AND/OR STOP AS DIRECTED IN THE DIVISION 16 SPECIFICATIONS, OVERRIDING ALL OTHER START/STOP SEQUENCES AND SAFETIES.

SYSTEM: MISCELLANEOUS FANS

POINT	INPUT		OUTPUT	
	DIGITAL	ANALOG	DIGITAL	ANALOG
1	A-10			
2			C-1	

SYSTEM: DX SPLIT SYSTEM

POINT	INPUT		OUTPUT	
	DIGITAL	ANALOG	DIGITAL	ANALOG
1	A-12			
2		B-5		

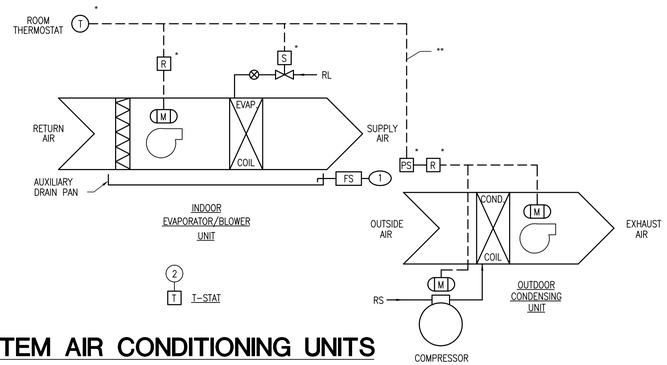

3 DX SPLIT SYSTEM AIR CONDITIONING UNITS
NOT TO SCALE

* - CONTROLS FURNISHED BY AIR CONDITIONING UNIT MANUFACTURER.
** - FIELD WIRING INSTALLED BY AUTOMATIC TEMPERATURE CONTROLS CONTRACTOR.

SEQUENCE OF OPERATION
DX SPLIT SYSTEM AIR CONDITIONING UNIT

TEMPERATURE CONTROL

PROVIDE LOW VOLTAGE, ADJUSTABLE WALL MOUNTED ROOM THERMOSTAT TO CONTROL COOLING/HEATER STAGES (WHERE SPECIFIED) IN SEQUENCE WITH DELAY BETWEEN STAGES, COMPRESSOR, CONDENSER, AND SUPPLY FAN TO MAINTAIN ROOM TEMPERATURE SETPOINT. INCLUDE SYSTEM SELECTOR SWITCH (HEAT-OFF-COOL) AND FAN CONTROL SWITCH (AUTO-ON).

FLOAT SWITCH

A FLOAT SWITCH WITH TWO PAIR OF CONTACTS SHALL BE LOCATED IN THE SECONDARY DRAIN PAN OF EACH EVAPORATOR BLOWER UNIT. WHEN THE FLOAT SWITCH DETECTS A BUILD-UP OF WATER, SHALL STOP THE FAN COIL UNIT. THE SECOND SET OF CONTRACTS SHALL BE USE FOR EMCS ALARM ONLY.

TEMPERATURE ALARM (FOR FC-1 THRU FC-7)

SPACE TEMPERATURE SENSOR SHALL SEND AN ALARM TO EMCS IF THE SPACE TEMPERATURE EXCEEDS 80°F.

TEXAS REGISTRATION: F-000014
Alegro Engineering
Consulting Engineers
5822 Cromo Dr. Suite 105
El Paso, Texas 79912
Tel. 915.533.0700

REFERENCES – BENCHMARK

DATE	REVISIONS	BY

CONSULTANT'S NAME
mijares mora
ARCHITECTS INC.
EL PASO, TEXAS 79912
111 N. FESTIVAL
TEL: 915-542-1991
FAX: 542-1934

ALTERATION OF A SEALED DOCUMENT WITHOUT THE ENGINEER'S SEAL IS A VIOLATION OF THE ENGINEER IS AN OFFENSE, UNDER THE TEXAS ENGINEERING PRACTICE ACT.

ARCHITECT'S SEAL
STATE OF TEXAS
ROLANDO LEGARRETA
84714
LICENSED PROFESSIONAL ENGINEER
5/12/16

SCALE

DATE	MAY 2016
DESIGN BY	AEGRO
DRAWN BY	GAG
CHKD. BY	GAG
APPD. BY	RL
JOB NO.	14-154

PROJECT NAME
EL PASO INTERNATIONAL AIRPORT
CHECKED BAGGAGE INSPECTION SYSTEM
6701 CONVAIR RD. EL PASO, TEXAS
EL PASO INTERNATIONAL

CITY OF EL PASO

SHEET TITLE
MECHANICAL CONTROLS

M10.01

FILE NO. XXXX

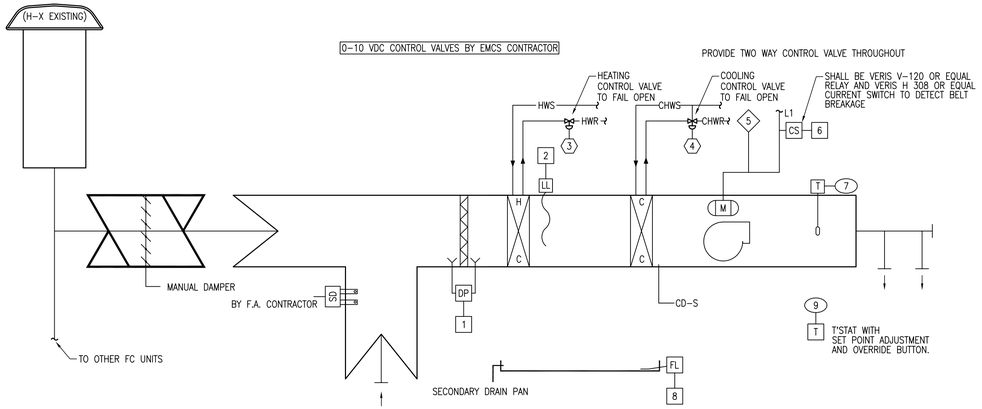

SYSTEM: HEATING AND COOLING FAN COIL UNIT WITH UN-TEMPERED AIR

POINT	INPUT		OUTPUT	
	DIGITAL	ANALOG	DIGITAL	ANALOG
1	A-4			
2	A-9			
3				D-2
4				D-2
5			C-1	
6	A-10			
7		B-3		
8	A-12			
9		B-15		

1 HEATING AND COOLING FAN COIL UNIT

N.T.S.

SEQUENCE OF OPERATION
HEATING AND COOLING FAN COIL (BLOWER COIL) UNIT

START/STOP
THE BUILDING ENERGY MONITORING AND CONTROL SYSTEM (EMCS) SHALL INITIATE START/STOP CONTROL OF THE FAN COILS SUPPLY FAN BY PROGRAMMED INPUT, TIMED OVERRIDE, OR OPERATOR OVERRIDE CONTROL. PROVIDE OPTIMIZATION FOR START/STOP SEQUENCE.

FAN STATUS
PROOF OF FAN OPERATION SHALL BE INDICATED BY THE CURRENT SWITCH. ON A START SIGNAL FROM THE EMCS TO ENERGIZE THE FAN COIL, THE FAN MOTOR SHALL START, ONCE PROVED BY THE CURRENT SWITCH; THE HEATING AND OR COOLING SEQUENCES SHALL BE ACTIVATED.

COOLING AND HEATING COIL CONTROL
A WALL MOUNTED TEMPERATURE SENSOR SHALL OUTPUT A PROPORTIONAL CONTROL SIGNAL TO THE FAN COIL CONTROLLER. THIS CONTROL SIGNAL WILL BE PROPORTIONAL TO THE DEVIATION FROM THE SPACE TEMPERATURE SETPOINT AND A PROPORTIONAL CONTROL SIGNAL WILL BE OUTPUT TO THE CORRESPONDING CONTROL VALVE (COOLING OR HEATING) ACTUATOR TO MODULATE SUPPLY AIR TEMPERATURE. BEFORE HEATING IS INITIATED, CONTROL SHALL ENTER A FIELD ADJUSTABLE NO LOAD BAND. ON SENSING NEED FOR HEAT/COOL THE CORRESPONDING CONTROL COIL VALVE SHALL BE MODULATED TO MAINTAIN SPACE TEMPERATURE.

SPACE SETBACK TEMPERATURE CONTROL
THE EMCS SHALL INITIATE SPACE TEMPERATURE SETBACK BY PROGRAMMED INPUT, TIMED OVERRIDE, OR OPERATOR OVERRIDE CONTROL. DURING UNOCCUPIED MODE, THE EMCS SHALL MODULATE THE COOLING COIL VALVE TO MAINTAIN A SETBACK TEMPERATURE OF 85 DEGREES (ADJUSTABLE). WHEN THE OUTSIDE AIR TEMPERATURE IS ABOVE 65 DEGREES (ADJUSTABLE). THE EMCS SHALL MODULATE THE WATER HEATING CONTROL VALVE TO MAINTAIN A SETBACK TEMPERATURE OF 65 DEGREES F (ADJUSTABLE) WHEN THE OUTSIDE AIR TEMPERATURE IS BELOW 60 DEGREES F (ADJUSTABLE). DURING UNOCCUPIED MODE, THE SUPPLY FAN SHALL BE OFF.

SPACE COOL DOWN AND WARM UP
THE EMCS SHALL INITIATE SPACE COOL DOWN OR WARM UP BY PROGRAMMED INPUT, TIMED OVERRIDE, OR OPERATOR OVERRIDE CONTROL. ONE (1) HOUR (ADJUSTABLE) BEFORE SPACE OCCUPANCY, THE EMCS SHALL ENABLE COOLING WHEN OUTSIDE AIR TEMPERATURE IS ABOVE 65 DEGREES F AND AVERAGE SPACE TEMPERATURE IS 8 DEGREES F ABOVE SETPOINT, OR HEATING WHENEVER THE OUTSIDE AIR TEMPERATURE IS BELOW 60 DEGREES F AND THE AVERAGE SPACE TEMPERATURE IS 8 DEGREES F BELOW SETPOINT. THE EMCS SHALL ENABLE COOLING OR HEATING AS REQUIRED TO BRING THE SPACE TO TEMPERATURE SETPOINT AS DESCRIBED ABOVE.

CLOGGED FILTER ALARM

FILTER SECTION SHALL HAVE A DIFFERENTIAL PRESSURE SWITCH MOUNTED ACROSS EACH FILTER. THE DIFFERENTIAL PRESSURE SWITCH SHALL BE SET TO SET AT EACH OF THE OPERATOR'S WORKSTATION AN ALARM INDICATING THAT FILTERS HAVE TO BE REPLACED OR FILTERS HAVE TO BE CLEANED WHEN EACH FILTER SECTION REACHES THE MAXIMUM ALLOWABLE PRESSURE DROP (ADJUSTABLE) AS SPECIFIED HEREIN:

1. FILTER SECTION: 0.75 IN. W.G.

AUTOMATIC SHUTDOWN CONTROL (FOR FAN COILS OVER 2,000 CFM ONLY).

UPON DETECTION OF SMOKE AT ANY DUCT MOUNTED SMOKE DETECTOR (FURNISHED AND INSTALLED BY

HANDLING UNIT MOTOR SHALL BE STOPPED. THE FIRE ALARM SYSTEM SHALL INITIATE AN ALARM TO THE EMCS ON AUTOMATIC SHUTDOWN CONTROL.

TEXAS REGISTRATION: F-000014
Alegro Engineering
Consulting Engineers
5822 Cromo Dr. Suite 105
El Paso, Texas 79912
Tel. 915.533.0700

ALTERATION OF A SEALED DOCUMENT WITHOUT PROPER AUTHORIZATION BY THE PROFESSIONAL ENGINEER IS AN OFFENSE, UNDER THE TEXAS ENGINEERING PRACTICE ACT.

REFERENCES – BENCHMARK

DATE	REVISIONS	BY

CONSULTANT'S NAME

mijares ● mora
ARCHITECTS INC.
EL PASO, TEXAS 79912
111 N. FESTIVAL
TEL: 915-542-1991
FAX: 542-1994

ARCHITECT'S SEAL

STATE OF TEXAS
ROLANDO LEGARRETA
84714
LICENSED PROFESSIONAL ENGINEER
5/27/16

SCALE

DATE	MAY 2016
DESIGN BY	ALEGRO
DRAWN BY	GAG
CHKD. BY	GAG
APPD. BY	RL
JOB NO.	14-154

PROJECT NAME

EL PASO INTERNATIONAL AIRPORT
CHECKED BAGGAGE INSPECTION SYSTEM
6701 CONVAIR RD. EL PASO, TEXAS

EL PASO INTERNATIONAL

CITY OF EL PASO

SHEET TITLE
MECHANICAL CONTROLS

M10.02

FILE NO. XXXX

SHEET 30 OF 34

GENERAL NOTES

(APPLY ONLY TO FIRE PROTECTION DRAWINGS)

1. FIRE SPRINKLER CONTRACTOR SHALL PROVIDE FIRE SUPPRESSION SYSTEM FOR THE ENTIRE BUILDING IN COMPLIANCE WITH NFPA-13, (OTHER SYSTEMS SHALL COMPLY WITH NFPA-14, AND NFPA-20), AND THE LOCAL AUTHORITIES HAVING JURISDICTION, IT SHALL BE THE FIRE SPRINKLER CONTRACTOR'S RESPONSIBILITY TO PROVIDE A COMPLETE SYSTEM THAT IS COORDINATED WITH THE ARCHITECTURAL, STRUCTURAL, MECHANICAL, PLUMBING, AND ELECTRICAL PLANS TO AVOID CONFLICTS WITH CEILING DIFFUSERS, DUCTWORK, PLUMBING PIPING, LIGHTING, CABLE TRAY, ARCHITECTURAL, AND STRUCTURAL FEATURES. FIRE PROTECTION SYSTEM(S) AS INDICATED IS FOR THE SPRINKLER CONTRACTOR TO USE AS A GUIDE ONLY AND DOES NOT RELIEVE SUCH CONTRACTOR OF THE RESPONSIBILITY TO PROVIDE A "COMPLETE" SYSTEM THAT COMPLIES COMPLETELY WITH ALL THE REQUIREMENTS OF THE CODES AND AGENCIES HAVING JURISDICTION. PROVIDE ORDINARY HAZARD PROTECTION IN ALL AREAS. WITH EXCEPTION TO STORAGE AREA A118 DESIGNATED BY EXTRA HAZARD FIRE PROTECTION.
2. FIRE SPRINKLER CONTRACTOR SHALL PROVIDE A MAXIMUM OF TWO COPIES OF SHOP DRAWINGS, CALCULATIONS, AND SUBMITTAL DATA TO THE LOCAL FIRE MARSHALL'S OFFICE.
3. SUBMITTAL SHALL CLEARLY DESIGNATE THE SYSTEM AS BEING REQUIRED FOR COMPLIANCE WITH THE APPROPRIATE BUILDING AND FIRE CODE AND ANY OTHER APPLICABLE STANDARDS.
4. SHOP DRAWING SUBMITTALS SHALL BE STAMPED BY THE FOLLOWING: A LICENSED ENGINEER IN THE STATE OF TEXAS, OR NICET LEVEL III TECHNICIAN.
5. CALCULATIONS SHALL BE PREPARED AS OUTLINED BY NFPA 13
6. CALCULATIONS SHALL CLEARLY INDICATE THE NAME OF THE OWNER; PROJECT STREET ADDRESS, THE RESPONSIBLE DESIGNER'S NAME, ADDRESS, AND TELEPHONE NUMBER.
7. SHOP DRAWINGS SHALL CLEARLY INDICATE THE DESIGN STANDARD(S) AND EDITION USED TO PREPARE THE SUBMISSION.
8. THE 8"ø FIRE LINE SHOWN ON THE SITE PACKAGE SHEET P1.0 IS FOR REFERENCE ONLY. FINAL SIZE SHALL BE DETERMINED BY FIRE PROTECTIONS CONTRACTOR'S HYDRAULIC CALCULATIONS. CONTRACTOR TO SUBMIT FIRE PROTECTION SHOP DRAWINGS APPROVED BY A FIRE ENGINEER AND EL PASO FIRE DEPARTMENT.
9. DRAWINGS SHALL INCLUDE A SCHEMATIC DRAWING OF THE FIRE PROTECTION UNDERGROUND SHOWING POINT OF ENTRY INTO THE BUILDING, SIZE, AND LENGTH OF PIPE, POINT OF CONNECTION TO CITY MAIN AND REFERENCED WATER FLOW LOCATION. DRAWINGS SHALL ALSO INCLUDE THE LOCATION AND TYPE OF VALVES, METERS, AND BACKFLOW PREVENTION DEVICES.
10. DRAWINGS SHALL BE DRAWN TO SCALE, ON "D" (24X36) SIZE SHEETS. DRAWINGS AND CALCULATIONS SHALL CLEARLY SHOW A FLOOR PLAN INDICATING THE LOCATION OF WALLS, PARTITIONS, AND FIRE RATED ASSEMBLIES, AND THE INTENDED USE OF EACH AREA, ROOM OR VOID SPACE.
11. DRAWINGS SHALL CLEARLY INDICATE TOTAL AREA, EXPRESSED IN SQUARE FEET PER FLOOR PROTECTED BY EACH SYSTEM RISER.
12. DRAWINGS SHALL INCLUDE FULL HEIGHT CROSS-SECTION ELEVATION DETAIL(S) INDICATING CONSTRUCTION, AND VERTICAL/HORIZONTAL DISTANCES OF SPRINKLERS RELATIVE TO UNDERSIDE OF ROOF/CEILING AND STRUCTURAL MEMBERS.
13. DRAWINGS SHALL CLEARLY INDICATE THE TYPE AND LOCATION OF ALL CONTROL, TEST, AND DRAIN VALVES, ALARM DEVICES, HOSE OUTLETS, AND RELATED EQUIPMENT.
14. DRAWINGS SHALL CLEARLY INDICATE THE MANUFACTURER, TEMPERATURE RATING, ORIFICE SIZE, HYDRAULIC K-FACTOR, AND QUANTITY OF EACH TYPE OF SPRINKLER TO BE INSTALLED.
15. CLEARLY INDICATE THE LOCATION OF SPECIAL SPRINKLERS (I.E, EXTENDED COVERAGE, SIDE WALLS, INTERMEDIATE/HIGH TEMPERATURE SPRINKLERS, ETC.). CLEARLY INDICATE MATERIALS TO BE USED, WALL THICKNESS, TYPE OF FITTINGS AND JOINTS, AND THE TYPE AND LOCATIONS OF HANGERS, SLEEVES, BRACES, AND METHODS TO SUPPORT SPRINKLER COMPONENTS.
16. DRAWINGS SHALL CLEARLY INDICATE NOMINAL PIPE SIZE, AND LENGTH OF PIPE INCLUDING RISER/DROP NIPPLES.
17. CLEARLY INDICATE METHOD OF PROTECTION FOR NON-METALLIC PIPING AS REQUIRED BY MANUFACTURER.
18. FIRE SPRINKLERS SYSTEMS SHALL BE HYDRAULICALLY CALCULATED. THE FOLLOWING DATA SHALL BE PROVIDED:
    - A. MINIMUM RATE OF WATER APPLICATION (DENSITY)
    - B. LOCATION AND SIZE OF DESIGN AREA.
    - C. INSIDE AND OUTSIDE HOSE STREAM ALLOWANCES AS ACTUALLY PROVIDED.
    - D. HYDRAULIC REFERENCE POINTS SHALL BE INDICATED ON THE PLAN CORRESPONDING WITH HYDRAULIC CALCULATION SHEETS.
    - E. PROVIDE A COPY OF WATER FLOW TEST RESULTS.
    - F. MINIMUM SAFETY MARGIN OF 10% SHALL BE ALLOWED AND INDICATED ON HYDRAULIC CALCULATION FORM.
19. DRAWINGS SHALL INDICATE METHOD OF MAINTAINING A MIN. TEMP. OF 40 DEGREES F FOR SPRINKLER SYSTEM PIPING INSTALLED IN UNCONDITIONED SPACES. HYDRAULIC CALCULATION SHALL INCLUDE A SUMMARY SHEET, DETAILED WORK SHEETS, AND A GRAPH SHEET.
20. CALCULATION SHEET SHALL INDICATE THE HAZARD CLASSIFICATION. WHEN MULTIPLE DESIGN DENSITIES ARE REQUIRED, SEPARATE CALCULATIONS SHALL BE PROVIDED FOR EACH HAZARD AREA.
21. CALCULATION SUMMARY SHEET SHALL INCLUDE:
    - A. DESIGN DENSITY AND TOTAL DESIGN AREA.
    - B. MAXIMUM AREA OF COVERAGE PER SPRINKLER.
    - C. TOTAL SYSTEM DEMAND AT BASE OF RISER. WATER FOR INSIDE AND OUTSIDE HOSE STREAMS SHALL BE REPRESENTED AS ACTUALLY PROVIDED.
    - D. 10% SAFETY MARGIN SHALL BE ALLOWED AND INDICATED ON HYDRAULIC CALCULATION FORM.
    - E. A GRAPHIC REPRESENTATION OF THE HYDRAULIC DEMAND SHALL BE PLOTTED BASED UPON WATER FLOW DATA AND TOTAL SPRINKLER SYSTEM HYDRAULIC DEMAND INCLUDING HOSE STREAMS.
22. THE FIRE PROTECTION CONTRACTOR SHALL COORDINATE WITH THE GENERAL CONTRACTOR ALL SITE WORK, IN ORDER TO TEST THE FIRE HYDRANTS AND USE AS BASIS OF DESIGN.
23. FIRE PROTECTION CONTRACTOR SHALL BE RESPONSIBLE TO OBTAIN WATER FLOW AND PRESSURE TEST RESULTS FROM THE FIRE HYDRANTS NEAREST TO NEW TAP. SUCH RESULTS SHALL BE USED FOR ALL HYDRAULIC CALCULATIONS.
24. FIRE PROTECTION CONTRACTOR WORK STARTS AT THE INSTALLATION OF THE POINT OF CONNECTION TO CITY MAIN.
25. SPRINKLER HEADS HAVE TO BE ALIGNED BUT NOT CENTERED IN ACOUSTICAL TILES.
26. FIRE PROTECTION CONTRACTOR SHALL BE RESPONSIBLE TO PROVIDE ALL FIRE EXTINGUISHERS NEEDED TO HAVE AN OPERATIONAL BUILDING.
27. FIRELINE AND FIRE LINE BACKFLOW PREVENTER SIZE SHALL BE VERIFIED BY HYDRAULIC CALCULATIONS.
28. ALL PROPOSED NEW FIRE HYDRANTS MUST MEET THE MINIMUM FLOW REQUIREMENTS AS PER TABLE B105.1 OF THE INTERNATIONAL FIRE CODE. THE TYPE OF CONSTRUCTION AND TOTAL SQUARE FOOTAGE OF THE BUILDING TO BE PROTECTED ARE THE TWO MAIN FACTORS CONSIDERED WHEN FIGURING THE TOTAL WATER FLOW REQUIRED. SUCH INFORMATION IS REQUIRED TO BE NOTED ON SUBMITTED DRAWINGS ALONG WITH FLOW TEST RECORDS FROM WATER MAINS. THE TOTAL CALCULATED FLOW MUST SATISFY THE MINIMUM REQUIREMENTS OF TABLE B105.1 IN ORDER TO BE APPROVED FOR INSTALLATION.
29. FIRE PROTECTION DRAWING IS FOR REFERENCE ONLY. THE DESIGN OF THE FIRE PROTECTION SYSTEM SHALL BE SUBMITTED BY FIRE PROTECTION CONTRACTOR.
30. WHEN SYSTEM HAS BEEN HYDRAULICALLY CALCULATED, DESIGNER SHALL DETERMINE IF A FIRE PUMP IS REQUIRED. IF WATER MAIN PRESSURE IS LOWER THAN SYSTEM PRESSURE, THEN A FIRE PUMP SHALL BE PROVIDED. A FIRE PUMP HAS BEEN PROVIDED FOR REFERENCE ONLY. DESIGNER SHALL DETERMINE THE FINAL FLOW AND PRESSURE OF SYSTEM AND DETERMINE FINAL FIRE PUMP SELECTION. FIRE PUMP SHALL BE CONSIDERED A UNIT PRICE ITEM. NEEDS TO BE COORDINATED WITH OWNER AND CM.
31. FIRE PUMP SHALL BE INSTALLED IN ACCORDANCE WITH NFPA 20 LATEST EDITIONS, FIRE MARSHALS OFFICE, AND LOCAL AMENDMENTS.
32. ALL ELECTRICAL, ALARM, CONTROL WIRING, AND INTERCONNECTING WIRING FOR WET PIPE, DRY PIPE, ANSUL SYSTEM, AND FIRE PUMP SHALL BE COORDINATED WITH FIRE ALARM AND ELECTRICAL CONTRACTOR. ALL ALARM, ELECTRICAL, AND CONTROL CONNECTIONS SHALL BE INSTALLED IN ACCORDANCE WITH NFPA 72 LATEST EDITION, FIRE MARSHALS OFFICE, AND LOCAL AMENDMENTS.

KEYED NOTES:

1. ADJUST EXISTING FIRE PROTECTION SYSTEM FOR NEW FLOOR PLAN LAYOUT.
2. EXTEND FIRE PROTECTION TO COVER NEW ADDITION.

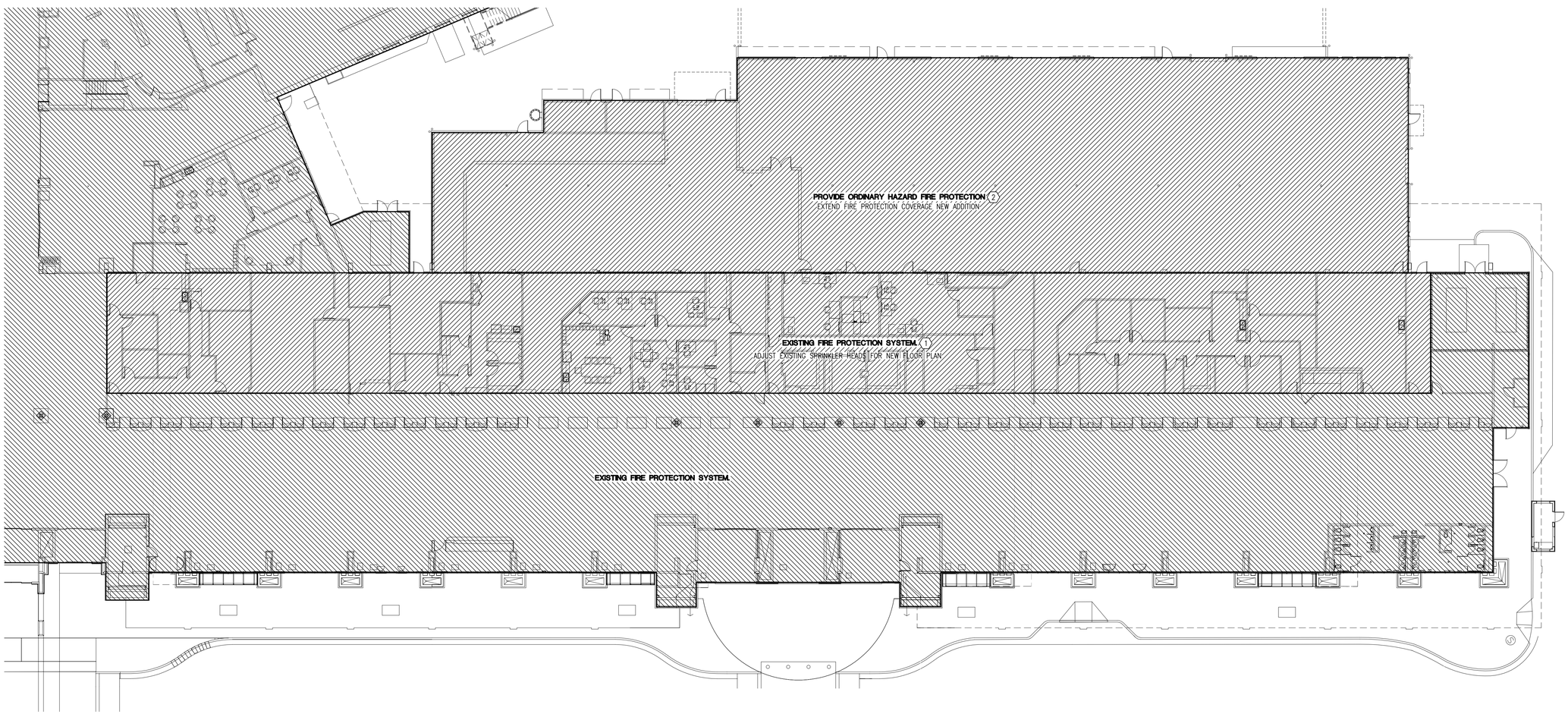

N 1 **FIRE PROTECTION PLAN - NEW WORK**

SCALE: 1/16" = 1'-0"

16' 8' 0 16' 32'

SCALE: 1/16" = 1'

TEXAS REGISTRATION: F-000014
Alegro Engineering
Consulting Engineers
5822 Cromo Dr. Suite 105
El Paso, Texas 79912
Tel. 915.533.0700

REFERENCES -- BENCHMARK

DATE	REVISIONS	BY

CONSULTANT'S NAME
mijares ● mora
ARCHITECTS INC.
EL PASO, TEXAS 79912
111 N. FESTIVAL
TEL: 915-542-1991 FAX: 542-1994

ALTERATION OF A SEALED DOCUMENT WITHOUT PROPER AUTHORIZATION BY THE PROFESSIONAL ENGINEER IS AN OFFENSE UNDER THE TEXAS ENGINEERING PRACTICE ACT.

ARCHITECT'S SEAL

STATE OF TEXAS
ROLANDO LEGARRETA
84714
LICENSED
PROFESSIONAL ENGINEER

SCALE

DATE	MAY 2016
DESIGN BY	AEGRO
DRAWN BY	GAG
CHKD. BY	GAG
APPD. BY	RL
JOB NO.	14-154

PROJECT NAME

EL PASO INTERNATIONAL AIRPORT
CHECKED BAGGAGE INSPECTION SYSTEM

6701 CONVAIR RD. EL PASO, TEXAS

EL PASO INTERNATIONAL

CITY OF EL PASO

SHEET TITLE

MECHANICAL FIRE PROTECTION PLAN - NEW WORK

M11.00

FILE NO. XXXX

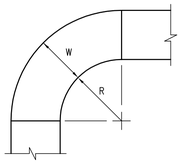

RADIUS ELBOW 90°

NOTES:
1. ALL ELBOWS WITH W < 12" SHALL BE RADIUS ELBOWS.
2. W < 32 INCHES R=W
   W > 32 INCHES R= 1/2W

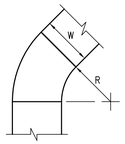

RADIUS ELBOWS 30/45/60°

NOTES:
1. PARTIAL ELBOWS, ALL SIZES SHALL BE CONSTRUCTED AS RADIUS ELBOWS.
2. W < 32 INCHES R=W
   W > 32 INCHES R= 1/2W

1 RADIUS ELBOWS-RECT. DUCT
NOT TO SCALE

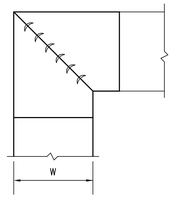

SQUARE 90°

NOTES:
1. SHALL ONLY BE USED FOR 90° ELBOWS. FOR ANGLES OTHER THAN 90° USE RADIUS ELBOW CONSTRUCTION.
2. PARTIAL ELBOWS, ALL SIZES SHALL BE CONSTRUCTED AS RADIUS ELBOWS.

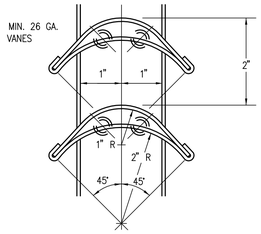

TURNING VANE DETAIL

2 SQUARE OR RECTANGULAR ELBOWS
NOT TO SCALE

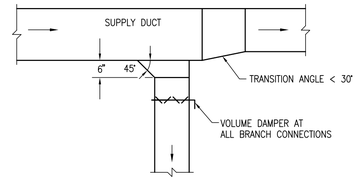

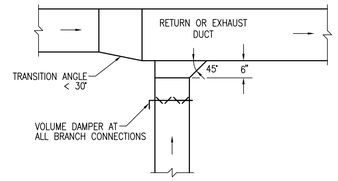

LOW PRESSURE DUCTS

3 90 RECT. BRANCH TAKE-OFFS
NOT TO SCALE

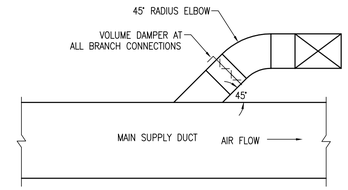

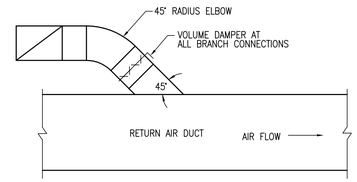

EXHAUST AIR SIMILAR

NOTES: 1. RECTANGULAR SHOWN, CIRCULAR SIMILAR. LOW PRESSURE DUCTS

4 LATERAL BRANCH CONNECTIONS
NOT TO SCALE

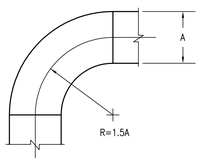

DIE STAMPED 90° ELBOW

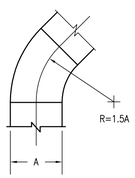

DIE STAMPED 45° ELBOW

RADIUS ELBOWS UP TO 8"

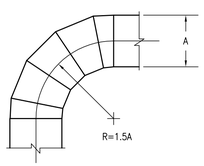

FABRICATED 5 GORE 90° ELBOW

0–35°_____ 2 PIECES
36–71°_____ 3 PIECES
72–90°_____ 5 PIECES

5 RADIUS ELBOWS-CIRC/FLAT OVAL DUCTS
NOT TO SCALE

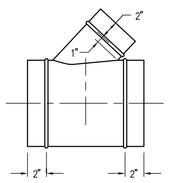

45° LATERAL

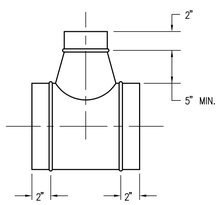

CONICAL TEE

6 CIRC/FLAT OVAL TAKE-OFFS
NOT TO SCALE

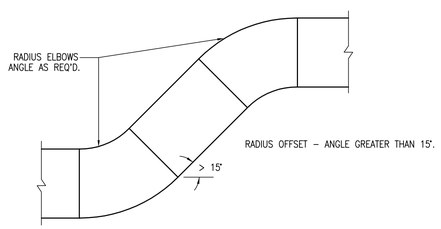

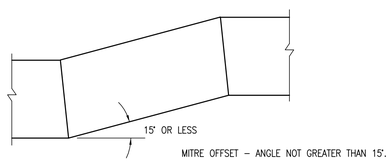

7 DUCT OFFSETS
NOT TO SCALE

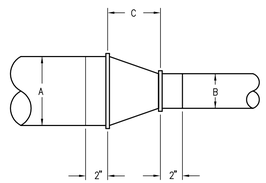

NOTES: 1. CIRC DUCTS C = A – B
2. FLAT OVAL DUCTS: C = DIFFERENCE BETWEEN THE MAJOR AXIS A AND THE MAJOR AXIS B.

8 CIRC/FLAT OVAL REDUCER
NOT TO SCALE

TEXAS REGISTRATION: F-000014
Alegro Engineering
Consulting Engineers
5822 Cromo Dr., Suite 105
El Paso, Texas 79912
Tel. 915.533.0700

REFERENCES -- BENCHMARK

DATE	REVISIONS	BY

CONSULTANT'S NAME

mijares ● mora
ARCHITECTS INC.
EL PASO, TEXAS 79912
111 N. FESTIVAL
TEL: 915-542-1991
FAX: 542-1994

ARCHITECT'S SEAL

STATE OF TEXAS
ROLANDO LEGARRETA
84714
LICENSED
PROFESSIONAL ENGINEER
5/12/16

ALTERATION OF A SEALED DOCUMENT WITHOUT THE ENGINEER'S PROPER ENGINEER IS AN OFFENSE UNDER THE TEXAS ENGINEERING PRACTICE ACT.

SCALE

DATE	MAY 2016
DESIGN BY	ALEGRO
DRAWN BY	GAG
CHKD. BY	GAG
APPD. BY	RL
JOB NO.	14-154

PROJECT NAME

EL PASO INTERNATIONAL AIRPORT
CHECKED BAGGAGE INSPECTION SYSTEM
6701 CONVAIR RD. EL PASO, TEXAS

EL PASO

CITY OF EL PASO

SHEET TITLE
MECHANICAL DETAILS

M12.00

FILE NO. XXXX

SHEET 32 OF 34

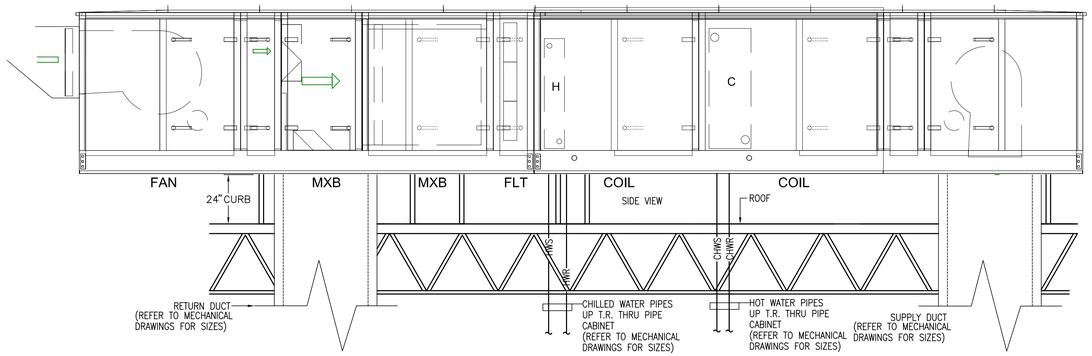

1 AHU DETAIL
NOT TO SCALE

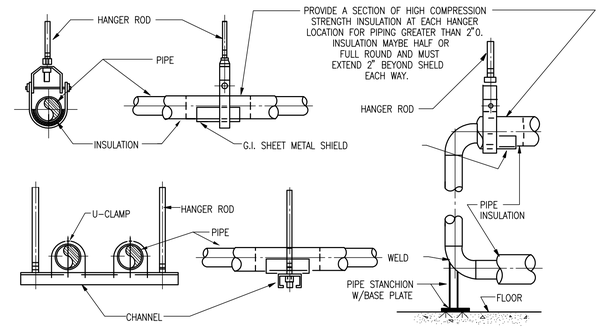

2 TYPICAL PIPE HANGERS
NOT TO SCALE

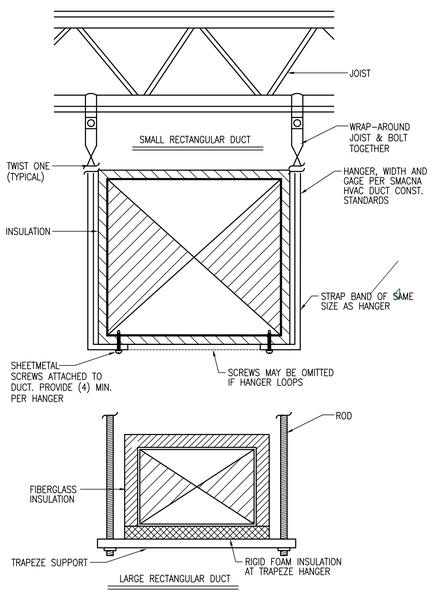

3 DUCT HANGER DETAIL
NOT TO SCALE

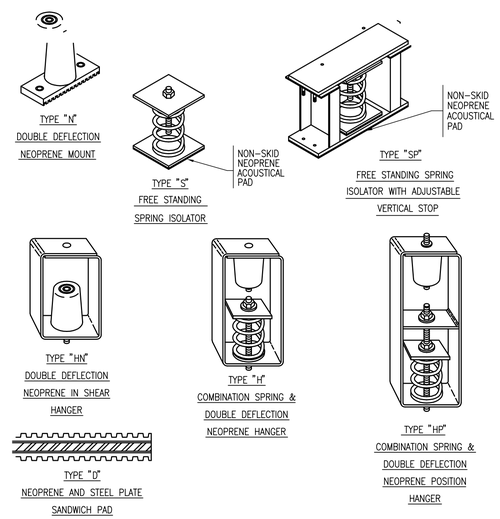

4 VIBRATION ISOLATORS
NOT TO SCALE

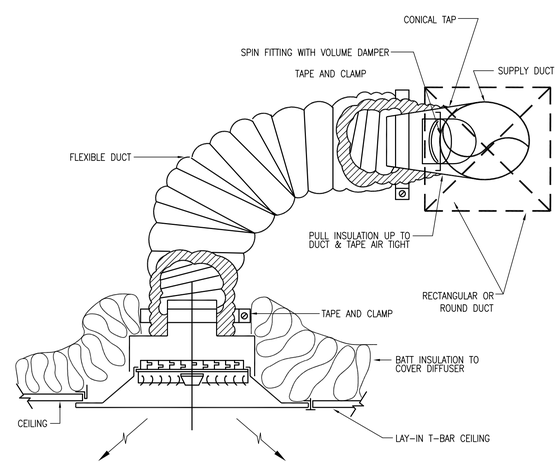

5 FLEXIBLE DUCT AND CEILING DIFFUSER DETAIL
NOT TO SCALE

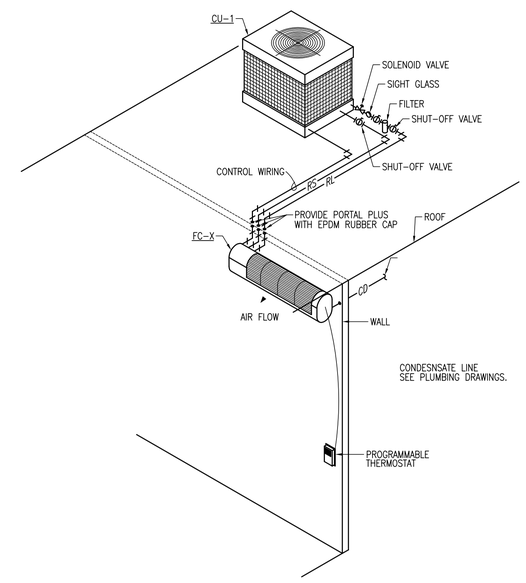

6 MINI-SPLIT INSTALLATION DETAIL.
NOT TO SCALE

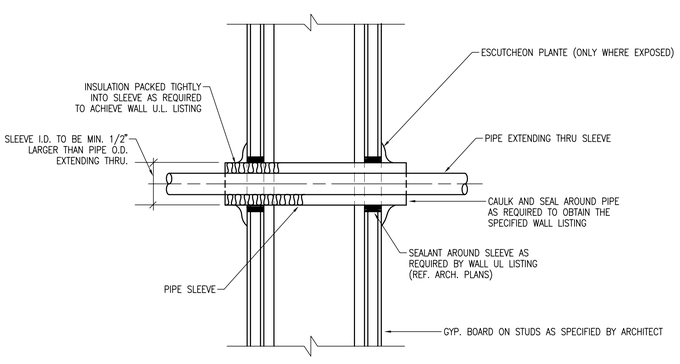

7 FIRE WALL PIPE PENETRATION DETAIL
NOT TO SCALE

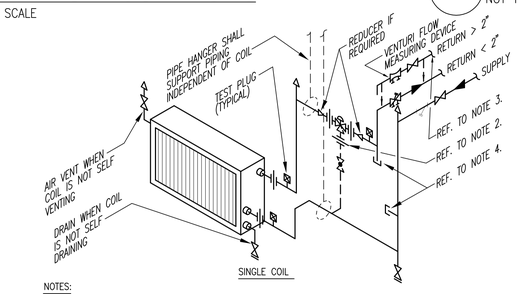

NOTES:

1. PIPING SHALL BE INSTALLED IN SUCH MANNER THAT IT WILL NOT BLOCK THE SWING OR USE OF ACCESS DOORS OR PANEL: NEITHER SHALL IT BLOCK THE SERVICING OF FILTERS, VALVES, OR EQUIPMENT.
2. A STRAIGHT-THRU MODULATING CONTROL VALVE IS SHOWN BY SOLID PIPING. WHEN A THREE-WAY CONTROL VALVE IS REQUIRED, PROVIDE DASHED PIPING ALSO.
3. a.) PIPING 2" & SMALLER: PROVIDE A CALIBRATED BALANCING VALVE WITH FLOW MEASUREMENT CONNECTIONS. (REF. SPEC. 15705).
   b.) PIPING 2 1/2" AND LARGER: PROVIDE VENTURI FLOW MEASURING DEVICE WITH SEPARATE SHUT OFF VALVE.
4. THE VENTURI FLOW MEASURING DEVICE MAY BE INSTALLED IN THE SUPPLY PIPING IF THE REQUIRED MINIMUM UPSTREAM AND DOWNSTREAM DIMENSIONS CANNOT BE OBTAINED IN THE RETURN PIPING.
5. PROVIDE 2" (OR LINE SIZE IF LESS) PLUGGED CONNECTION.
6. PIPE COIL FOR COUNTERFLOW OF WATER WITH RESPECT TO AIR FLOW.
7. 2-WAY OR 3-WAY CONTROL VALVE. REFER TO SCHEMATIC CHILLED AND HOT WATER FLOW DIAGRAMS AND CONTROL DIAGRAMS FOR TYPE OF CONTROL VALVES. CONTROL VALVE SHALL BE PROVIDED BY CONTROLS CONTRACTOR.

8 TYPICAL CONNECTIONS TO WATER COILS
NOT TO SCALE

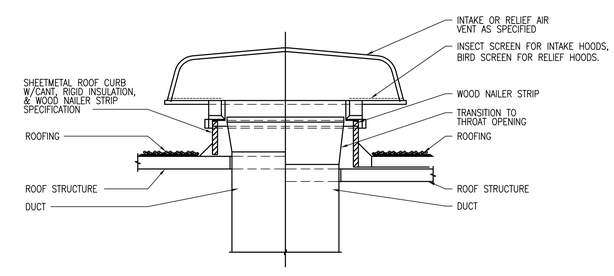

9 INTAKE / RELIEF VENT INSTALLATION
NOT TO SCALE

TEXAS REGISTRATION: F-000014
Alegro Engineering
Consulting Engineers
5822 Cromo Dr., Suite 105
El Paso, Texas 79912
Tel. 915.533.0700

REFERENCES -- BENCHMARK

DATE	REVISIONS	BY

CONSULTANT'S NAME
mijares mora
ARCHITECTS INC.
EL PASO, TEXAS 79912
111 N. FESTIVAL
TEL: 915-542-1991 FAX: 542-1994

ARCHITECT'S SEAL
STATE OF TEXAS
ROLANDO LEGARRETA
84714
LICENSED PROFESSIONAL ENGINEER

ALTERATION OF A SEALED DOCUMENT WITHOUT THE SEAL OF THE LICENSED PROFESSIONAL ENGINEER IS AN OFFENSE UNDER THE TEXAS ENGINEERING PRACTICE ACT.

SCALE

DATE	MAY 2016
DESIGN BY	AEGRO
DRAWN BY	GAG
CHKD. BY	GAG
APPD. BY	RL
JOB NO.	14-154

PROJECT NAME
EL PASO INTERNATIONAL AIRPORT
CHECKED BAGGAGE INSPECTION SYSTEM
8701 CONVAIR RD. EL PASO, TEXAS

CITY OF EL PASO

SHEET TITLE
MECHANICAL DETAILS

M12.01

FILE NO. XXXX

SHEET 33 OF 34

KEYED NOTES

(THIS DETAIL ONLY)

1. RETAINING ANGLES. MIN. 1 1/2"X1 1/2"X0.054 (16GA.) RETAINING ANGLES MUST LAP STRUCTURAL OPENING 1" MINIMUM AND COVER CORNERS OF OPENINGS
2. CLEARANCE: 1/8" PER LINEAR FOOT BOTH DIMENSIONS (SEE GENERAL NOTE 1 BELOW)
3. STEEL SLEEVE: REF. CONNECTION SCHEDULE
4. APPROVED FIRE DAMPER
5. SECURE RETAINING ANGLES TO SLEEVE ONLY ON 8" O.C. USING ONE OF THE FOLLOWING:
   1. 1/2" LONG WELDS
   2. 1/4" BOLTS AND NUTS
   3. NO. 10 STEEL SCREWS
   4. MINIMUM 3/16" RIVETS
6. SECURE DAMPER TO SLEEVE 8" O.C. USING ONE OF THE FOLLOWING METHODS:
   1. 1/2" LONG WELDS
   2. 1/4" BOLTS AND NUTS
   3. NO. 10 STEEL SCREWS
   4. MIN. 3/16" STEEL RIVETS
7. CONNECT DUCT TO SLEEVE: REF. CONNECTION SCHEDULE
8. ACCESS DOOR OR PANEL.

GENERAL NOTES

(THIS DETAIL ONLY)

1. FIRE DAMPER SLEEVE CLEARANCE WITHIN A WALL OPENING S BASED ON 1/8" PER FOOT OF WIDTH OR HEIGHT UNLESS OTHERWISE STATED IN THE U.L. LISTING OF THE ASSEMBLY. THE SLEEVE MAY REST ON THE BOTTOM OF THE OPENING, AND NEED TO BE CENTERED (FRACTIONAL DIMENSIONS SHALL BE TAKEN AS THE NEXT LARGEST WHOLE FOOT).

   THE SLEEVE IS RETAINED IN THE WALL OPENING BY THE USE OF STEEL RETAINING ANGLES (KEYED NOTE 1). THESE MUST OVERLAP THE EDGE OF THE FRAMING BY A MINIMUM OF ONE (1) INCH OVER AND BEYOND ALL MATERIAL IN THE OPENING. THE MINIMUM WIDTH OF THE RETAINING ANGLE SHALL BE 1 1/2" WIDE.

   THE DIMENSIONS REQUIRED FOR THE OPENING SHALL BE THOSE REMAINING AFTER IT HAS BEEN FRAMED AND FIRE RESISTIVE MATERIALS ARE PROVIDED. THE FIRE RESISTIVE MATERIAL RESISTANCE SHALL BE EQUAL TO THE WALL CONSTRUCTION AND U.L. LISTING. THE CONTRACTOR ERECTING THE WALL IS RESPONSIBLE FOR PROVIDING THE FIRE RESISTIVE MATERIAL AND CORRECT SIZE OPENINGS TO ACHIEVE PROPER CLEARANCE.
2. THE FIRE DAMPER MANUFACTURERS' INSTALLATION DETAILS AND INSTRUCTIONS AS TESTED AND APPROVED BY U.L. TAKE PRECEDENCE OVER THE ABOVE DETAILS WHERE APPLICABLE.
3. ASSEMBLY SHALL MATCH THE U.L. WALL CONSTRUCTION LISTING AS SPECIFIED BY THE ARCHITECT.
4. ALL DUCTS SHALL TERMINATE AT THE FIRE DAMPER SLEEVES OR THE DAMPER FRAMES AS REQUIRED BY U.L. STANDARD 555. SLEEVE THICKNESS IS CONTINGENT ON TYPE OF CONNECTION. ALL DAMPERS SHALL BE U.L. LISTED AND SHALL HAVE MAXIMUM DIMENSIONS AS REQUIRED BY THE TEST RATING. CONTINGENT ON SLEEVE THICKNESS A RIGID CONNECTION MAY BE USED IN LIEU OF A BREAKAWAY CONNECT. SLEEVES MAY BE OMITTED WHERE DAMPERS ARE DESIGNED TO BE IN NON-DUCTED AIR PASSAGES OR WHERE HOUSING PERMITS ATTACHMENT OF RETAINING ANGLES TO THE HOUSING. ATTACHMENT OF RETAINING ANGLES MUST NOT RESTRICT THE OPERATION OF THE FIRE DAMPER IN ANY WAY.
5. WHERE THE FIRE DAMPER SLEEVE IS EXPOSED TO THE AIRSTREAM, THE METAL SLEEVE SHALL BE OF THE SAME MATERIAL AS THE DUCT SYSTEM. A STEEL SLEEVE SHALL BE USED FOR FIBROUS GLASS DUCTWORK AND WHERE THE FIRE DAMPER SLEEVE IS NOT EXPOSED TO THE AIRSTREAM.

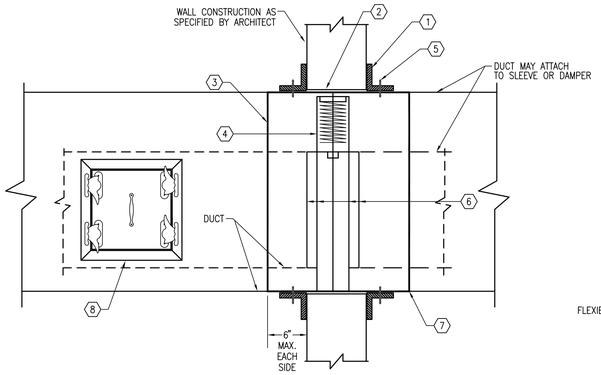

FIRE DAMPER CONNECTION SCHEDULE

RECOMMENDED MINIMUM SLEEVE THICKNESS FOR FIRE DAMPERS

TYPE OF CONNECTION	DUCT TYPE	DUCT DIMENSION	SLEEVE GAGE
RIGID	ROUND–RECTANGULAR	24" MAX. DIAM. 24" MAX. HEIGHT AND 36" MAX. WIDTH	16
RIGID	ROUND–RECTANGULAR	OVER 24" DIAM. OVER 24" HEIGHT AND/OR OVER 36" WIDTH	14
BREAKAWAY	ROUND–RECTANGULAR	12" AND UNDER	26
		13"–30"	24
(SLEEVE GAGE SHALL NOT		31"–54"	22
BE LESS THAN THE		55"–84"	20
CONNECTING DUCT GAGE)		85" AND OVER	18

1 FIRE DAMPER INSTALLATION DETAIL

NOT TO SCALE

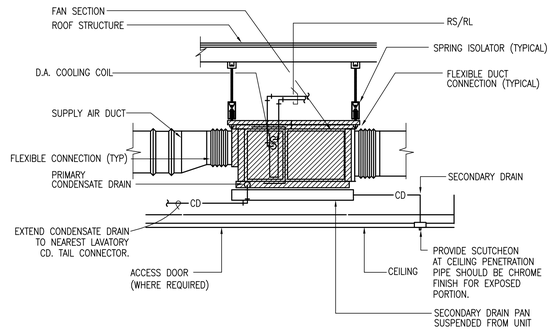

2 SUSPENDED FAN COIL DETAIL

NOT TO SCALE

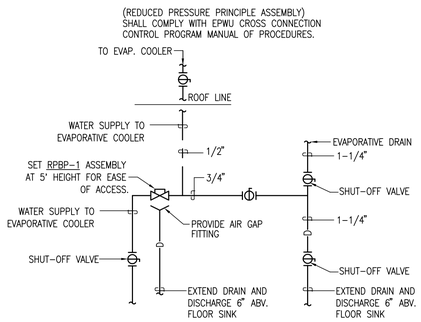

3 EVAPORATIVE COOLER WATER SUPPLY & DRAIN

NOT TO SCALE

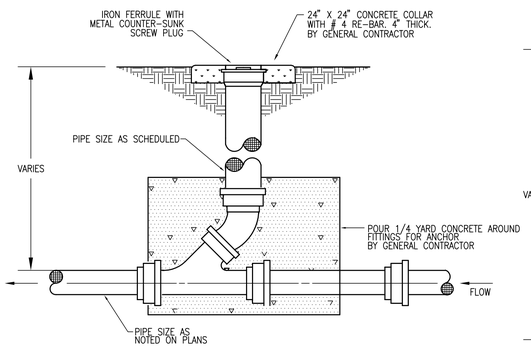

4 CLEANOUT TO GRADE

NOT TO SCALE

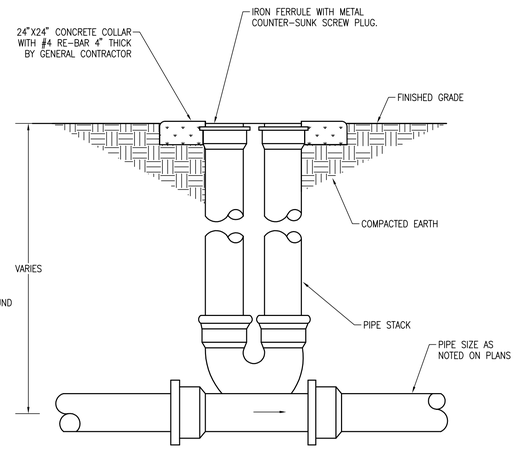

5 TWO-WAY CLEANOUT

NOT TO SCALE

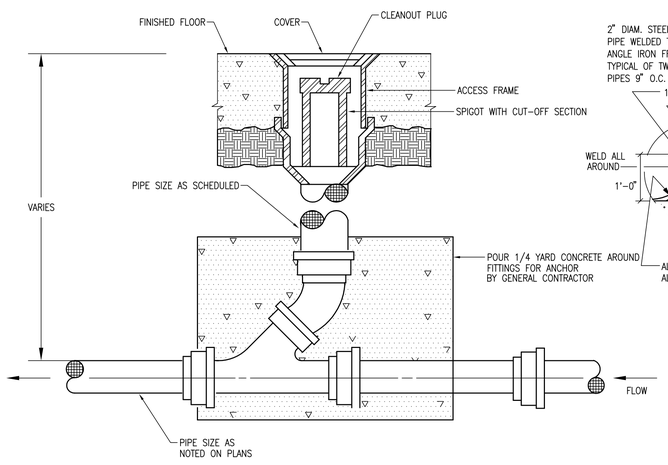

6 FLOOR CLEANOUT DETAIL

NOT TO SCALE

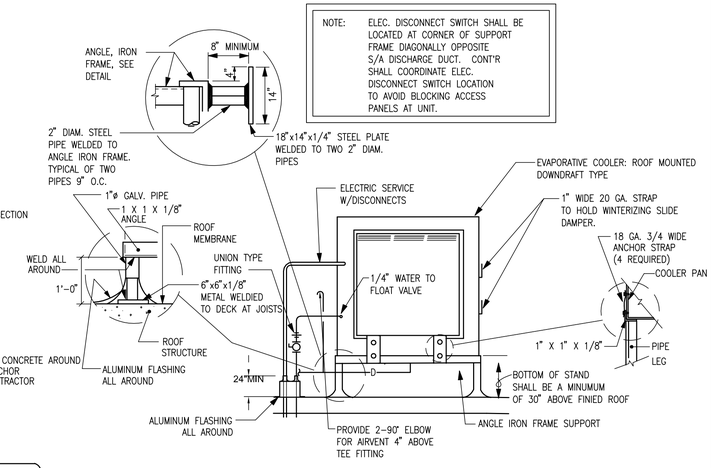

7 EVAPORATIVE COOLER DETAIL

SCALE:NOT TO SCALE

TEXAS REGISTRATION: F-000014
Alegro Engineering
Consulting Engineers
5822 Cromo Dr. Suite 105
El Paso, Texas 79912
Tel. 915.533.0700

REFERENCES -- BENCHMARK

DATE	REVISIONS	BY

CONSULTANT'S NAME
mijares mora
ARCHITECTS INC.
D. PASO, TEXAS 79912
111 N. FESTIVAL
TEL: 915-542-1991
FAX: 542-1994

ALTERATION OF A SEALED DOCUMENT WITHOUT THE ENGINEER'S WRITTEN CONSENT IS AN OFFENSE, UNDER THE TEXAS ENGINEERING PRACTICE ACT.

ARCHITECT'S SEAL

STATE OF TEXAS
ROLANDO LEGARRETA
84714
LICENSED PROFESSIONAL ENGINEER

SCALE

DATE	MAY 2016
DESIGN BY	ALEGRO
DRAWN BY	GAG
CHKD. BY	GAG
APPD. BY	RL
JOB NO.	14-154

PROJECT NAME

EL PASO INTERNATIONAL AIRPORT CHECKED BAGGAGE INSPECTION SYSTEM

6701 CONVAR RD. EL PASO, TEXAS

EL PASO INTERNATIONAL AIRPORT

CITY OF EL PASO

SHEET TITLE

MECHANICAL DETAILS

M12.02

FILE NO. XXXX

SHEET 34 OF 34

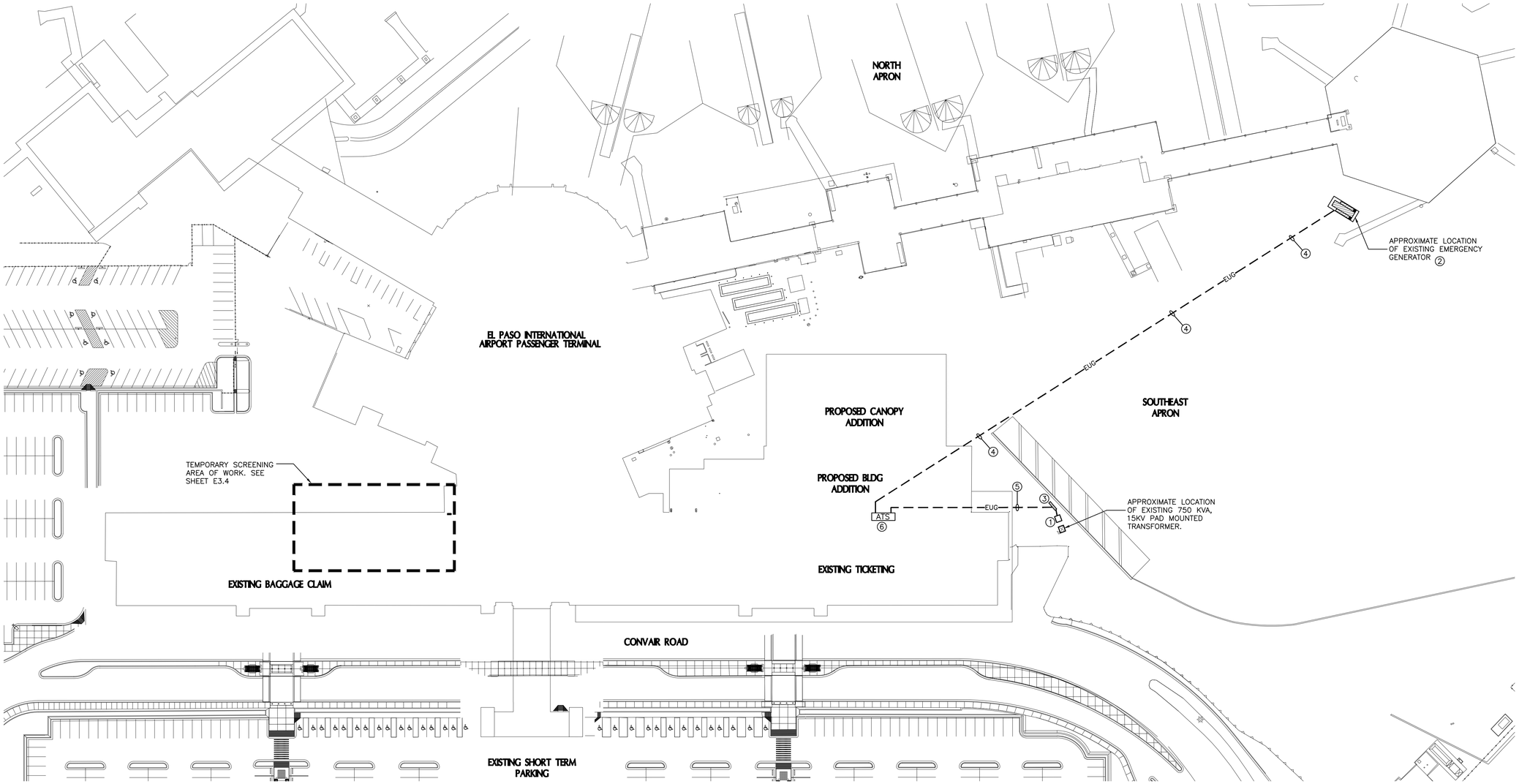

1 ELECTRICAL SITE PLAN

SCALE 1" = 50'-0"

PLAN NORTH

KEYED NOTES:

1. PROPOSED LOCATION OF NEW EPEC PAD MOUNTED TRANSFORMER NEXT TO EXISTING 750KVA, 15KV TRANSFORMER. COORDINATE WITH EPEC AS SOON AS CONTRACT IS LET AND COORDINATE WITH EXISTING UTILITIES.
2. APPROXIMATE LOCATION OF EXISTING 480V, 3PH, 1563KVA, 1000 KW, 0.8 P.F. GENERATOR.SEE RISER DIAGRAM ON SHEET E7.0 FOR DETAILS.
3. PROPOSED LOCATION OF CT METER, MAIN 1000A & 600A DISCONNECT SWITCHES. SEE ELECTRICAL RISER DIAGRAM ON SHEET E7.0
4. (9) 3" CONDUITS DIRECT BURIED EACH WITH 4–#350 MCM CU. CONDRS. AND 1–#3/0 CU. GND. FROM AUTOMATIC TRANSFER SWITCH TO EMERGENCY GENERATOR. SEE RISER DIAGRAM ON SHEET E7.0. CONTRACTOR TO COORDINATE WITH CIVIL PLANS FOR EXACT CONDUIT ROUTE LOCATION. CONTRACTOR MUST BORE UNDER EXISTING 18" CONCRETE WITH CONDUITS AND WIRE. COORDINATE WITH OWNER FOR BORING SCHEDULE AND REQUIREMENTS. CONTRACTOR MUST INSTALL ONE CIRCUIT WITH 27 HOT CONDUCTORS, 9 NEUTRALS AND 9 GROUND CONDUCTORS. CONTRACTOR SHOULD DETERMINATE NUMBER OF CONDUITS (MINIMUM OF 9) TO ASSURE A SMOOTH INSTALLATION.
5. (3) 3" CONDS EACH WITH 4–#350 MCM CU. CONDRS. AND 1–#2/0 CU. GND. FROM AUTOMATIC TRANSFER SWITCH TO 1000A DISCONNECT. (3) 2" CONDS EACH WITH 4–#3/0 AND 1–#1 CU GND FROM PANELBOARD 'HA' TO 600A DISCONNECT. SEE RISER DIAGRAM ON SHEET E7.0. CONTRACTOR TO CUT AND PATCH EXISTING CONCRETE SIDEWALKS AND ASPHALT DRIVEWAYS AS NECESSARY FOR CONDUIT INSTALLATION.
6. PROVIDE AND INSTALL NEW AUTOMATIC TRANSFER SWITCH, 1,000A, 277/480V, 3PH, TYPE 1 IN ELECTRICAL ROOM 123F. SEE ELECTRICAL RISER DIAGRAM ON SHEET E5.0.

ALPHA ENGINEERING, INC.
ENGINEERING CONSULTANTS
1818 E. RIO GRANDE • EL PASO, TEXAS 79902
TEL. (915) 838–9900• FAX. (915) 838–9909
REGISTRATION # F005238

REFERENCES -- BENCHMARK

DATE	REVISIONS	BY

CONSULTANT'S NAME

mijares • mora
ARCHITECTS INC.
EL PASO, TEXAS 79912
TEL: 915-542-1984

ENGINEER'S SEAL

SCALE

DATE	MAY 2016
DESIGN BY	MM/RMP
DRAWN BY	S.D.
CHKD. BY	JLM
APPD. BY	JLM
JOB NO.	1603

PROJECT NAME

EL PASO INTERNATIONAL AIRPORT
CHECKED BAGGAGE INSPECTION SYSTEM

6701 CONVAIR RD. EL PASO, TEXAS

EL PASO INTERNATIONAL AIRPORT

CITY OF EL PASO

SHEET TITLE

ELECTRICAL SITE PLAN

E1.0

FILE NO. 238512

SHEET 1 OF 21

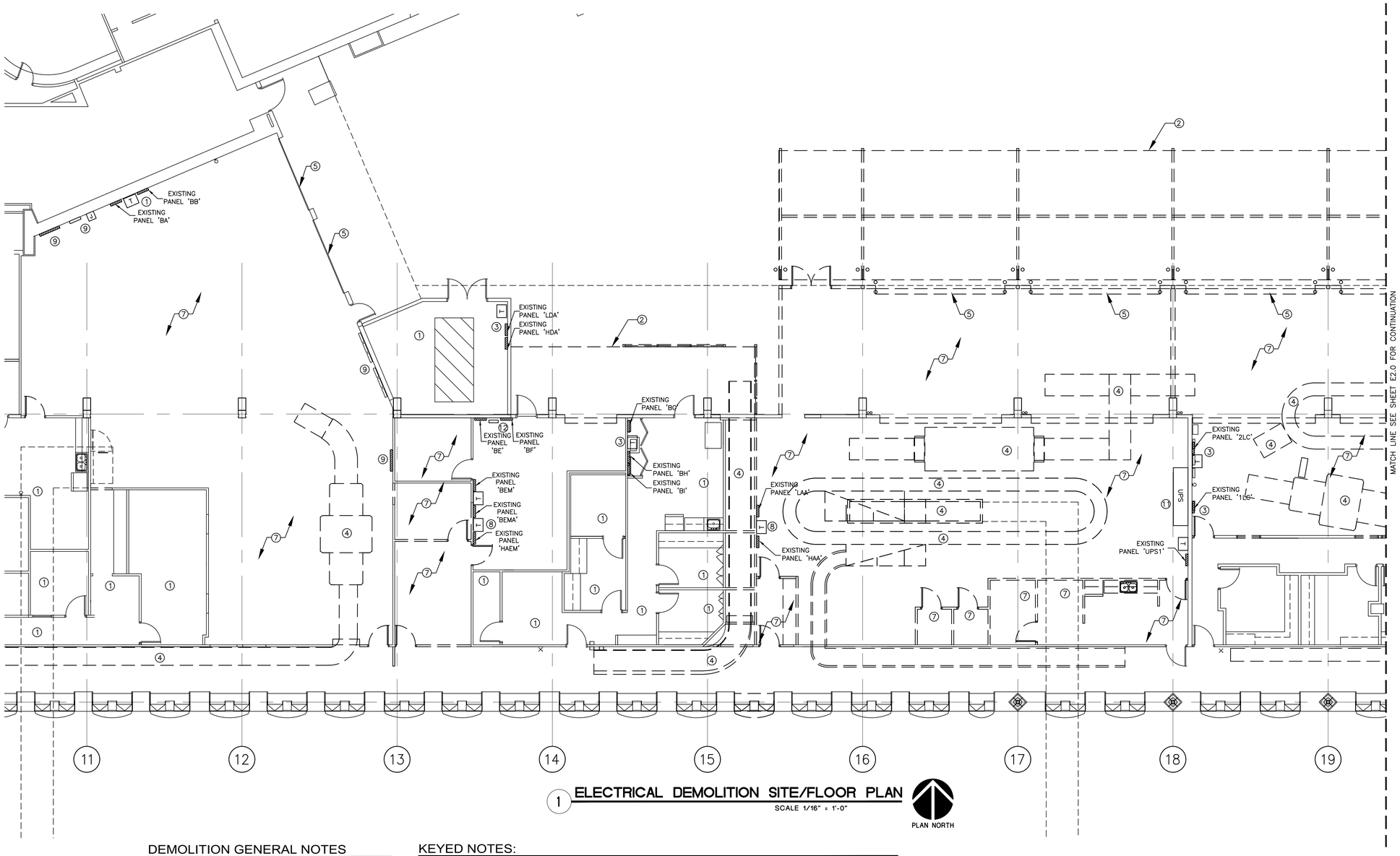

1 ELECTRICAL DEMOLITION SITE/FLOOR PLAN

SCALE 1/16" = 1'-0"

PLAN NORTH

DEMOLITION GENERAL NOTES

A. ELECTRICAL CONTRACTOR IS RESPONSIBLE TO ACHIEVE THE SCOPE OF DEMOLITION, EVEN IF DEMOLITION IS NOT SHOWN OR NOTED. CONTRACTOR MUST COORDINATE WITH ARCHITECT FOR SCOPE OF DEMOLITION BEFORE DOING ANY WORK.

B. CONTRACTOR MUST VISIT SITE BEFORE BIDDING ON THIS PROJECT.

C. ELECTRICAL CONTRACTOR MUST RETURN ALL EPIA BAGGAGE EQUIPMENT AND ANY OTHER ELECTRICAL DEVICES IF NOT USED TO OWNER.

KEYED NOTES:

1. NO DEMOLITION WORK REQUIRED IN THIS AREA.
2. EXISTING ROOF OVERHEAD ABOVE. ELECTRICAL CONTRACTOR TO REMOVE ALL EXISTING ELECTRICAL DEVICES (LIGHT FIXTURES, RECEPTACLES, SPECIAL SYSTEMS, J-BOXES, PULL BOXES, CONDUIT, WIRING, ETC). CONTRACTOR TO IDENTIFY AND ENSURE CIRCUIT CONTINUITY FOR ALL DEVICES OUT OF SCOPE OF DEMOLITION. COORDINATE WITH ARCHITECT FOR EXTENT OF DEMOLITION BEFORE DOING ANY WORK.
3. EXISTING ELECTRICAL PANELS AND TRANSFORMERS TO REMAIN. NO WORK REQUIRED.
4. EXISTING BAGGAGE SYSTEM/EQUIPMENT TO BE REMOVED. ELECTRICAL CONTRACTOR TO REMOVE ASSOCIATED MOTORS, WIRING, CIRCUIT AND CONTROLS(IF EXISTING). COORDINATE WITH EPIA PERSONNEL AND ARCHITECT FOR EXTENT OF DEMOLITION BEFORE DOING ANY WORK.
5. EXISTING GARAGE DOOR TO BE REMOVED. CONTRACTOR TO REMOVED ASSOCIATED MOTOR, WIRING, CIRCUIT AND CONTROL (IF EXISTING) BACK TO SOURCE.
6. EXISTING PORTION OF WALL TO BE REMOVED. CONTRACTOR TO REMOVE ANY ELECTRICAL DEVICE INCLUDING SPECIAL SYSTEMS (IF EXISTING) BACK TO SOURCE. CONTRACTOR TO IDENTIFY AND ENSURE CIRCUIT CONTINUITY FOR DEVICES OUT OF SCOPE OF DEMOLITION. SEE NEW FLOOR PLAN AS NECESSARY.
7. ELECTRICAL CONTRACTOR TO REMOVE ALL EXISTING ELECTRICAL DEVICES (LIGHT FIXTURES, RECEPTACLES, SPECIAL SYSTEMS, J-BOXES, PULL BOXES, CONDUIT, WIRING, ETC) IN THIS ROOM. CONTRACTOR TO IDENTIFY AND ENSURE CIRCUIT CONTINUITY FOR ALL DEVICES OUT OF SCOPE OF DEMOLITION AND RELOCATE EXISTING DEVICES AS NECESSARY. COORDINATE WITH ARCHITECT FOR EXTENT OF DEMOLITION.
8. EXISTING PANELBOARDS AND ASSOCIATED TRANSFORMERS TO BE RELOCATED. SEE SHEET E4.0 FOR NEW LOCATION AND DETAILS.
9. EXISTING FIRE ALARM DEVICES/TELECOM DEVICES TO BE REMOVED. CONTRACTOR TO IDENTIFY AND ENSURE CIRCUIT CONTINUITY FOR ALL DEVICES OUT OF EXTENT OF DEMOLITION. CONTRACTOR TO RELOCATE EXISTING DEVICES IF NECESSARY, EXTEND CIRCUITS AS NECESSARY AND COORDINATE NEW LOCATION WITH OWNER.
10. EXITING PANELBOARDS AND ASSOCIATED TRANSFORMER TO BE REPLACED AND RELOCATED. SEE SHEET E4.0 FOR NEW LOCATION AND DETAILS.
11. EXISTING UPS AND ASSOCIATED TRANSFORMER AND PANELBOARD 'UPS1' TO BE REMOVED. REMOVE EXISTING ASSOCIATED CONDUITS AND FEEDERS BACK TO SOURCE.
12. EXISTING PANELBOARDS AND TRANSFORMER TO BE REPLACED. SEE SHEET E4.0 FOR DETAILS.

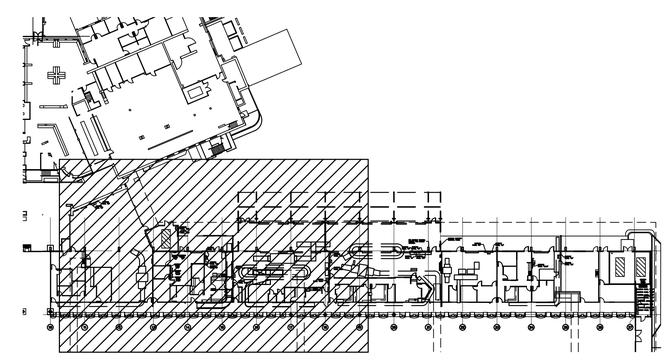

KEY PLAN

SCALE : N.T.S.

ALPHA ENGINEERING, INC.
ENGINEERING CONSULTANTS
1818 E. RIO GRANDE • EL PASO, TEXAS 79902
TEL. (915) 838-9900• FAX. (915) 838-9909
REGISTRATION # F005238

REFERENCES -- BENCHMARK

DATE	REVISIONS	BY

CONSULTANT'S NAME

mijares • mora
ARCHITECTS INC.
EL PASO, TEXAS 79912
FAX. 915-542-1884

ENGINEER'S SEAL

SCALE

DATE	MAY 2016
DESIGN BY	MM/RMP
DRAWN BY	S.D.
CHKD. BY	J.L.M.
APPD. BY	
JOB NO.	1603

PROJECT NAME

EL PASO INTERNATIONAL AIRPORT
CHECKED BAGGAGE INSPECTION SYSTEM
8701 CONVAIR RD. EL PASO, TEXAS

CITY OF EL PASO

SHEET TITLE

ELECTRICAL ENLARGED DEMOLITION PLAN

E2.0

FILE NO. 238512

SHEET 2 OF 21

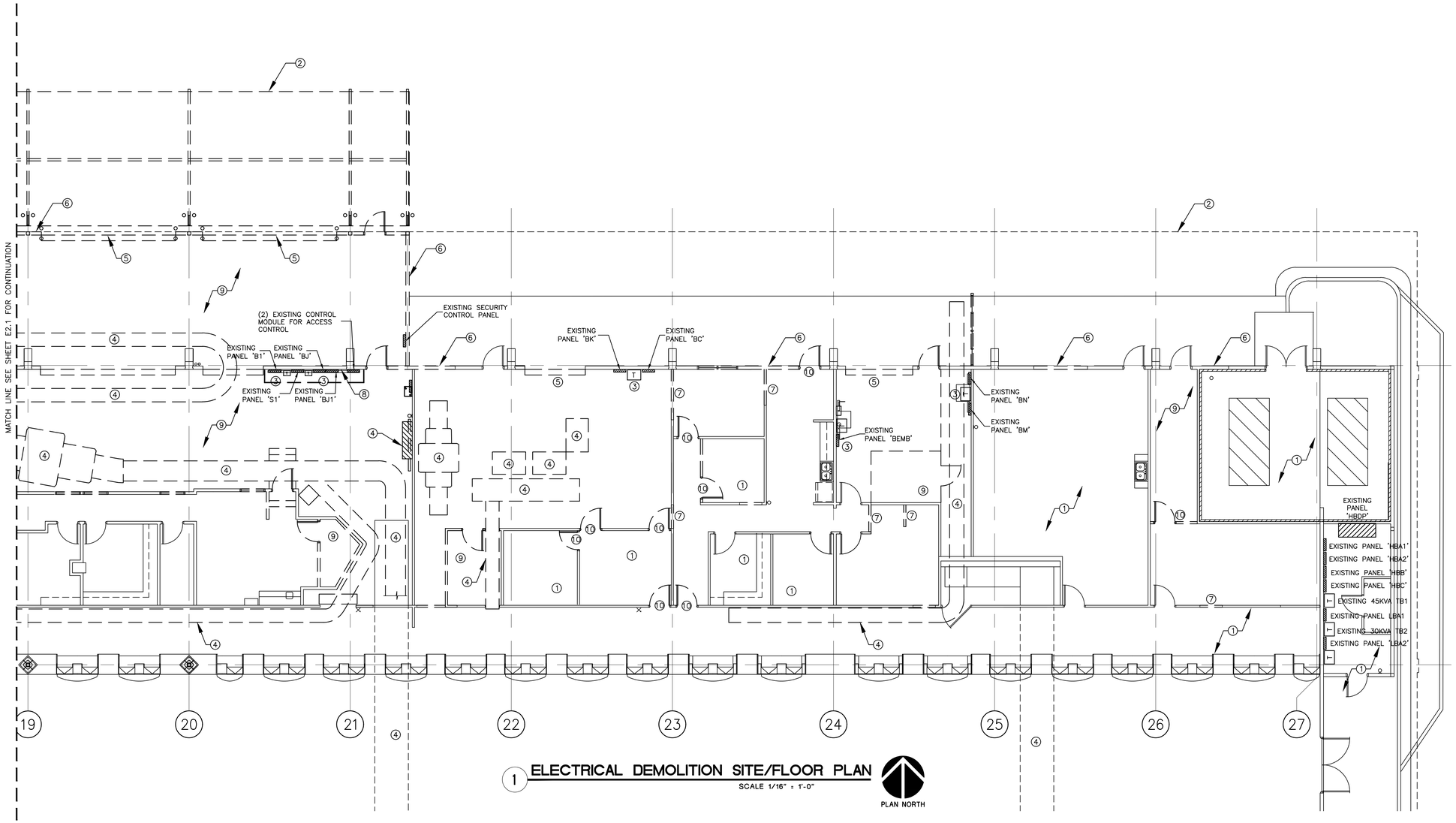

1 ELECTRICAL DEMOLITION SITE/FLOOR PLAN

SCALE 1/16" = 1'-0"

PLAN NORTH

DEMOLITION GENERAL NOTES

A. ELECTRICAL CONTRACTOR IS RESPONSIBLE TO ACHIEVE THE SCOPE OF DEMOLITION, EVEN IF DEMOLITION IS NOT SHOWN OR NOTED. CONTRACTOR MUST COORDINATE WITH ARCHITECT FOR SCOPE OF DEMOLITION BEFORE DOING ANY WORK.

B. CONTRACTOR MUST VISIT SITE BEFORE BIDDING ON THIS PROJECT.

C. ELECTRICAL CONTRACTOR MUST RETURN ALL EPIA BAGGAGE EQUIPMENT AND ANY OTHER ELECTRICAL DEVICES IF NOT USED TO OWNER.

KEYED NOTES:

1. NO DEMOLITION WORK REQUIRED IN THIS AREA.
2. EXISTING ROOF OVERHEAD ABOVE. ELECTRICAL CONTRACTOR TO REMOVE ALL EXISTING ELECTRICAL DEVICES (LIGHT FIXTURES, RECEPTACLES, SPECIAL SYSTEMS, J-BOXES, PULL BOXES, CONDUIT, WIRING, ETC). CONTRACTOR TO IDENTIFY AND ENSURE CIRCUIT CONTINUITY FOR ALL DEVICES OUT OF SCOPE OF DEMOLITION. COORDINATE WITH ARCHITECT FOR EXTENT OF DEMOLITION BEFORE DOING ANY WORK.
3. EXISTING ELECTRICAL PANELS AND TRANSFORMERS TO REMAIN. NO WORK REQUIRED.
4. EXISTING BAGGAGE SYSTEM/EQUIPMENT TO BE REMOVED. ELECTRICAL CONTRACTOR TO REMOVE ASSOCIATED MOTORS, WIRING, CIRCUIT AND CONTROLS(IF EXISTING). COORDINATE WITH EPIA PERSONNEL AND ARCHITECT FOR EXTENT OF DEMOLITION BEFORE DOING ANY WORK.
5. EXISTING GARAGE DOOR TO BE REMOVED. CONTRACTOR TO REMOVED ASSOCIATED MOTOR, WIRING, CIRCUIT AND CONTROL (IF EXISTING) BACK TO SOURCE.
6. CONTRACTOR TO REMOVE ANY ELECTRICAL DEVICE INCLUDING SPECIAL SYSTEMS ON EXTERIOR WALL. CONTRACTOR TO IDENTIFY AND ENSURE CIRCUIT CONTINUITY FOR DEVICES OUT OF SCOPE OF DEMOLITION.
7. EXISTING PORTION OF WALL TO BE REMOVED. CONTRACTOR TO REMOVE ANY ELECTRICAL DEVICE INCLUDING SPECIAL SYSTEMS (IF EXISTING) BACK TO SOURCE. CONTRACTOR TO IDENTIFY AND ENSURE CIRCUIT CONTINUITY FOR DEVICES OUT OF SCOPE OF DEMOLITION. SEE NEW FLOOR PLAN AS NECESSARY.
8. ALL UNUSED ELECTRICAL AND TELEPHONE/DATA CABLE TO BE REMOVED IN ITS ENTIRETY ON THIS WALL. CONTRACTOR TO ENSURE CIRCUIT CONTINUITY FOR REMAINING DEVICES. COORDINATE WITH EPIA PERSONNEL FOR REQUIREMENTS BEFORE DOING ANY WORK.
9. ELECTRICAL CONTRACTOR TO REMOVE ALL EXISTING ELECTRICAL DEVICES (LIGHT FIXTURES, RECEPTACLES, SPECIAL SYSTEMS, J-BOXES, PULL BOXES, CONDUIT, WIRING, ETC) IN THIS ROOM. CONTRACTOR TO IDENTIFY AND ENSURE CIRCUIT CONTINUITY FOR ALL DEVICES OUT OF SCOPE OF DEMOLITION. COORDINATE WITH ARCHITECT FOR EXTENT OF DEMOLITION.
10. EXISTING DOOR TO BE REMOVED. CONTRACTOR TO REPLACED EXISTING SWITCH AND EXTEND SWITCH LEG AS NECESSARY FOR RELOCATION. SEE SHEET E3.1 FOR REQUIREMENTS.
11. EXISTING PANELBOARDS AND TRANSFORMER TO BE REPLACED. SEE SHEET E4.0 FOR DETAILS.

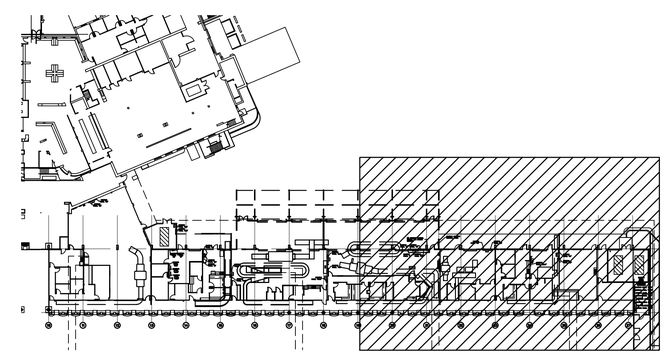

KEY PLAN

SCALE : N.T.S.

ALPHA ENGINEERING, INC.
ENGINEERING CONSULTANTS
1818 E. RIO GRANDE • EL PASO, TEXAS 79902
TEL. (915) 838-9900• FAX. (915) 838-9909
REGISTRATION # F005236

REFERENCES -- BENCHMARK

DATE	REVISIONS	BY

CONSULTANT'S NAME

mijares mora
ARCHITECTS INC.
111 N. EXCHANGE
EL PASO, TEXAS 79912
TEL 915-542-1991
FAX 542-7984

ENGINEER'S SEAL

SCALE

DATE	MAY 2016
DESIGN BY	MM/BP
DRAWN BY	S.D.
CHKD. BY	S.D.
APPD. BY	JLM
JOB NO.	1603

PROJECT NAME

EL PASO INTERNATIONAL AIRPORT
CHECKED BAGGAGE INSPECTION SYSTEM

6701 CONVAIR RD. EL PASO, TEXAS

CITY OF EL PASO

SHEET TITLE

ELECTRICAL ENLARGED DEMOLITION PLAN

E2.1

FILE NO. 238512

SHEET 3 OF 21

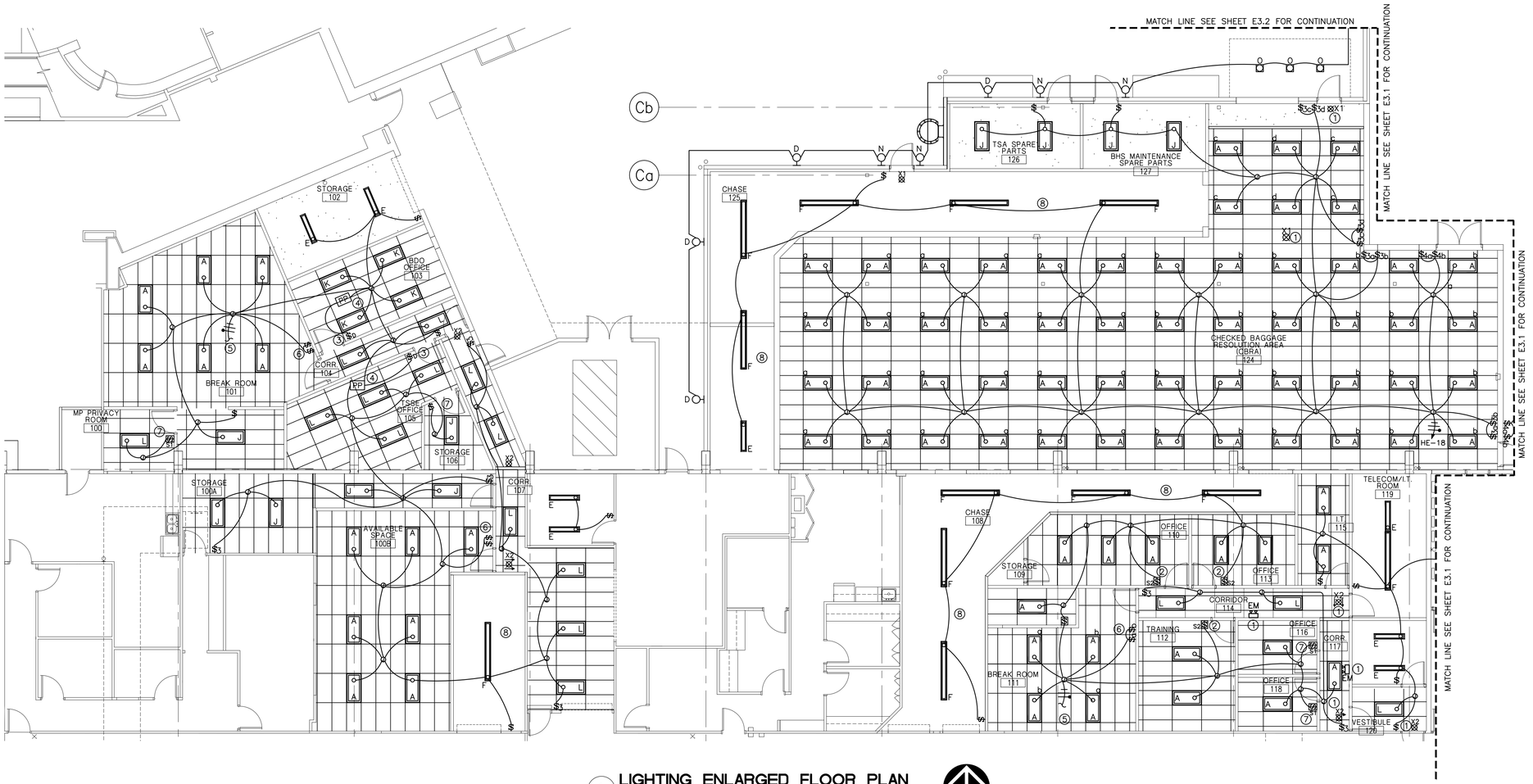

1 LIGHTING ENLARGED FLOOR PLAN

SCALE 1/8" = 1'-0"

PLAN NORTH

FIXTURE SCHEDULE

TYPE	DESCRIPTION & MFR. CAT. No.	LAMPS & WATTS	MOUNTING	NOTES
A	CREE CR24 40L 40K S	LED 40W	RECESSED	
B	CREE KR6-13L-40K-277 10V	LED 18W	RECESSED	
C	HUBBELL LWS-35HL-W-EU	LED 110W	RECESSED	
C1	HUBBELL LWS-35HL-W-E	LED 110W	RECESSED	(3)
D	CREE SEC-EDG 3M WM 08 E UL CBA 350 40K OR EQUAL	LED 90W	WALL @10'-0" A.F.F.	(1)
E	HUBBELL LCL4-30LW-EU-CSHC	LED 48W	PENDANT @14'-0" A.F.F.	(2)
F	HUBBELL LCL8-30LW-EU-CSHC	LED 48W	PENDANT @14'-0" A.F.F.	(2)
J	CREE ZR24 32L 40K 10V	LED 32W	RECESSED	(2)
K	CREE CR24 40L 40K 10V	LED 44W	RECESSED	
L	CREE CR24 40L 35K S	LED 32W	RECESSED	
N	HUBBELL LD6LED 4 D W 40K 7 FL35 277V DM CBA	LED 28W	WALL @ 14'-0"	(1)
O	PRESCOLITE LC6LED 277 6LCLED 5 40K 8 WH WT B24 OR EQUAL	17W LED	RECESSED	(1)(2)
EM	DUALITE LX U R W E	LED 10W	SURFACE CEILING	
X1	DUALITE LX U R W E	LED 10W	SURFACE CEILING	
X2	DUALITE LX U R W	LED 10W	SURFACE CEILING	

(1) ARCHITECT WILL DICTATE LIGHT FIXTURE COLOR AND HEIGHT MOUNTING.
(2) CONTRACTOR TO PROVIDE ALL MATERIAL NECESSARY FOR LIGHT FIXTURE MOUNTING TYPE.
(3) LIGHT FIXTURE CONTROLLED BY DAY LIGHT SENSOR CONTROL. SEE LIGHTING FLOOR PLAN FOR DETAILS.

LIGHTING GENERAL NOTES:

A. ALL NEW BUILDING ADDITION LIGHTING, INTERIOR AND EXTERIOR, IS SERVED FROM EMERGENCY GENERATOR, THEREFORE, NO INTERIOR OR EXTERIOR EMERGENCY LIGHTING WILL BE NECESSARY.

B. COORDINATE MOUNTING HEIGHTS FOR ALL LIGHT FIXTURES, INTERIOR AND EXTERIOR, WITH ARCHITECT BEFORE ROUGH-IN.

C. ALL PENDANT MOUNTED LIGHT FIXTURES TO BE HUNG USING 1/4" THREAD RODS. COORDINATE WITH ARCHITECT FOR EXACT MOUNTING HEIGHT.

KEYED NOTES:

1. ALL EXIT AND EMERGENCY LIGHTS MUST BE CONNECTED TO AN UNSWITCHED HOT CONDUCTOR.
2. PROVIDE AND INSTALL WALL MOUNTED DUAL TECHNOLOGY OCCUPANCY SENSOR. SENSOR TO BE HUBBELL LH MT D 2 OR EQUAL. SENSOR TO BE PROVIDED WITH TWO BUTTONS. CONNECT EACH BUTTON TO ONE LEAD ON EACH LIGHT FIXTURE. ONE BUTTON SHALL CONTROL 50% OF EACH FIXTURE IN ROOM AND BE BE SET TO AUTO-ON/AUTO-OFF. OTHER BUTTON SHALL CONTROL 50% OF EACH FIXTURE IN ROOM AND BE SET TO MANUAL-ON/AUTO-OFF. SEED DETAIL 1/E7.1 ON SHEET E7.1 FOR OCCUPANCY SENSOR WIRING.
3. PROVIDE AND INSTALL 0-10V DIMMER SWITCH. DIMMER TO BE LUTRON DIVA DVTV-IV. DIMMER SWITCH MUST BE COMPATIBLE WITH LIGHT FIXTURE. COORDINATE WITH LIGHT FIXTURE MANUFACTURER FOR COMPATIBLE DIMMERS. MAKE CONNECTIONS TO POWER PACK ABOVE CEILING. SEE DETAIL 2/EXX ON SHEET EXX. EACH DIMMER MUST BE INSTALLED IN INDIVIDUAL BOX. INSTALL DIMMER 6" FROM THE EDGE OF THE DOOR ON WALL.
4. PROVIDE AND INSTALL POWER PACK ABOVE ACCESSIBLE CEILING FOR DIMMER SWITCH. POWER PACK TO BE LUTRON PP-277H OR EQUAL. MAKE CONNECTIONS TO LIGHT FIXTURES AND DIMMER. INSTALL POWER PACK INSIDE 8"X8"X4" J-BOX ABOVE CEILING. SEE DETAIL 2/E7.1 ON SHEET E7.1.
5. CONNECT NEW LIGHTING TO EXISTING LIGHTING CIRCUIT.
6. CONTRACTOR TO CONNECT EACH SWITCH TO CONTROL 50% OF EACH LIGHT FIXTURE OUTPUT.
7. PROVIDE AND INSTALL WALL MOUNTED DUAL TECHNOLOGY OCCUPANCY SENSOR. SENSOR TO BE HUBBELL LH MT S 1 OR EQUAL. WIRE PER MANUFACTURER'S INSTALLATION INSTRUCTIONS. SEE DETAIL 4/E7.1 ON SHEET E7.1.
8. COORDINATE NEW LIGHTING IN THIS AREA WITH CONVEYOR SYSTEM.

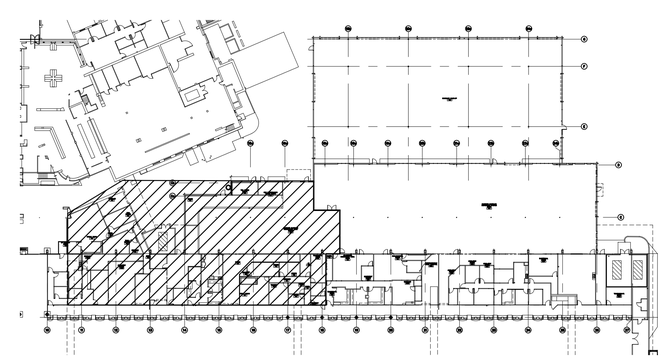

KEY PLAN

SCALE : N.T.S.

ALPHA ENGINEERING, INC.
ENGINEERING CONSULTANTS
1818 E. RIO GRANDE • EL PASO, TEXAS 79902
TEL. (915) 838-9900• FAX. (915) 838-9909
REGISTRATION # F005236

REFERENCES -- BENCHMARK

DATE	REVISIONS	BY

CONSULTANT'S NAME

mijares • mora
ARCHITECTS INC.
EL PASO, TEXAS 79912
111 N. EXCHANGE
TEL 915-542-1991

ENGINEER'S SEAL

SCALE

DATE	MAY 2016
DESIGN BY	MM/RMP
DRAWN BY	S.D.
CHKD. BY	S.D.
APPD. BY	J.L.M.
JOB NO.	1603

PROJECT NAME

EL PASO INTERNATIONAL AIRPORT
CHECKED BAGGAGE INSPECTION SYSTEM

6701 CONVAIR RD. EL PASO, TEXAS

EL PASO INTERNATIONAL AIRPORT

CITY OF EL PASO

SHEET TITLE

LIGHTING ENLARGED PLAN

E3.0

FILE NO. 238512

SHEET 13 OF 21

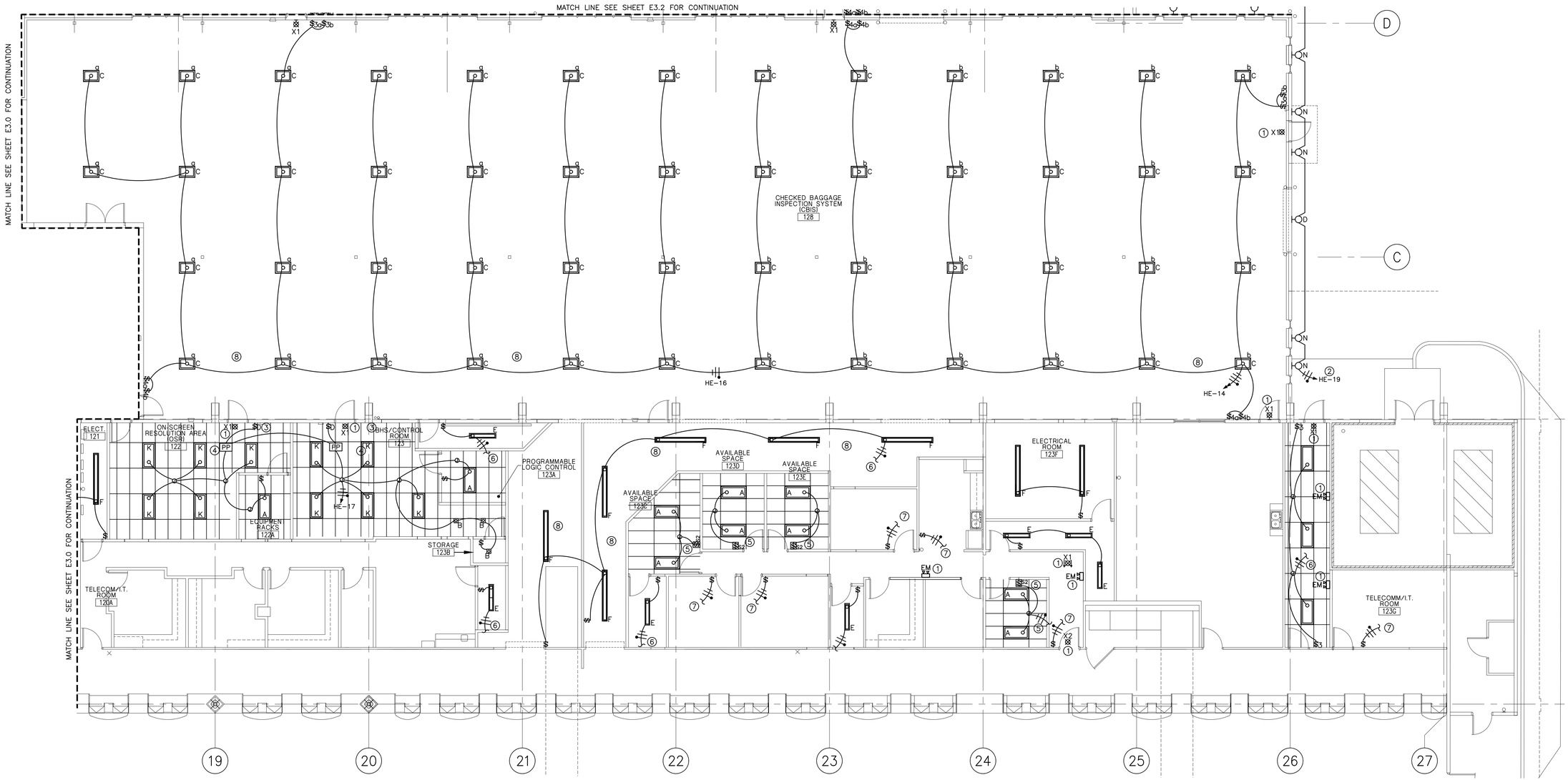

1 LIGHTING ENLARGED FLOOR PLAN

SCALE 1/8" = 1'-0"

PLAN NORTH

LIGHTING GENERAL NOTES:

A. ALL NEW BUILDING ADDITION LIGHTING, INTERIOR AND EXTERIOR, IS SERVED FROM EMERGENCY GENERATOR, THEREFORE, NO INTERIOR OR EXTERIOR EMERGENCY LIGHTING WILL BE NECESSARY.

B. COORDINATE MOUNTING HEIGHTS FOR ALL LIGHT FIXTURES, INTERIOR AND EXTERIOR, WITH ARCHITECT BEFORE ROUGH-IN.

C. ALL PENDANT MOUNTED LIGHT FIXTURES TO BE HUNG USING 1/4" THREAD RODS. COORDINATE WITH ARCHITECT FOR EXACT MOUNTING HEIGHT.

KEYED NOTES:

1. ALL EXIT AND EMERGENCY LIGHTS MUST BE CONNECTED TO AN UNSWITCHED HOT CONDUCTOR.
2. THIS CIRCUIT TO BE CONTROLLED BY PHOTOCELL ON ROOF. PHOTOCELL FACING SOUTH. USE 3/4" CONDUIT WITH 2-#10 CONDRS AND 1-#10 CU. GND.
3. PROVIDE AND INSTALL 0-10V DIMMER SWITCH. DIMMER TO BE LUTRON DIVA DVTV-IV. DIMMER SWITCH MUST BE COMPATIBLE WITH LIGHT FIXTURE. COORDINATE WITH LIGHT FIXTURE MANUFACTURER FOR COMPATIBLE DIMMERS. MAKE CONNECTIONS TO POWER PACK ABOVE CEILING. SEE DETAIL 2/E7.1 ON SHEET E7.1. EACH DIMMER MUST BE INSTALLED IN INDIVIDUAL BOX. INSTALL DIMMER 6" FROM THE EDGE OF THE DOOR ON WALL.
4. PROVIDE AND INSTALL POWER PACK ABOVE ACCESSIBLE CEILING FOR DIMMER SWITCH. POWER PACK TO BE LUTRON PP-277H OR EQUAL. MAKE CONNECTIONS TO LIGHT FIXTURES AND DIMMER. INSTALL POWER PACK INSIDE 8"X8"X4" J-BOX ABOVE CEILING. SEE DETAIL 2/E7.1 ON SHEET E7.1.
5. PROVIDE AND INSTALL WALL MOUNTED DUAL TECHNOLOGY OCCUPANCY SENSOR. SENSOR TO BE HUBBELL LH MT D 2 OR EQUAL. SENSOR TO BE PROVIDED WITH TWO BUTTONS. CONNECT EACH BUTTON TO ONE LEAD ON EACH LIGHT FIXTURE. ONE BUTTON SHALL CONTROL 50% OF EACH FIXTURE IN ROOM AND BE BE SET TO AUTO-ON/AUTO-OFF. OTHER BUTTON SHALL CONTROL 50% OF EACH FIXTURE IN ROOM AND BE SET TO MANUAL-ON/AUTO-OFF. SEED DETAIL 1/E7.1 ON SHEET E7.1 FOR OCCUPANCY SENSOR WIRING.
6. CONNECT NEW LIGHTING TO EXISTING LIGHTING CIRCUIT.
7. CONTRACTOR TO RELOCATE AND REPLACE EXISTING SWITCHES TO CONTROL ROOM LIGHTS. EXTEND CIRCUIT AS NECESSARY FOR NEW SWITCH LOCATION. RELOCATE EXISTING LIGHTS AS NECESSARY FOR NEW ROOM LAYOUT. REPLACE EXISTING LIGHT BULBS AND BALLAST IF NECESSARY.
8. COORDINATE LIGHTS WITH NEW CONVEYOR SYSTEM. IN THIS AREA.

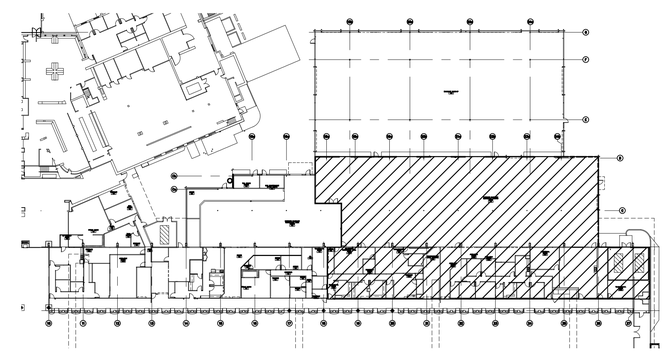

KEY PLAN

SCALE : N.T.S.

ALPHA ENGINEERING, INC.
ENGINEERING CONSULTANTS
1818 E. RIO GRANDE • EL PASO, TEXAS 79902
TEL: (915) 838-9900• FAX: (915) 838-9909
REGISTRATION # F005236

REFERENCES -- BENCHMARK

DATE	REVISIONS	BY

CONSULTANT'S NAME

mijares mora
ARCHITECTS INC.
EL PASO, TEXAS 79912
111 N. FESTIVAL
TEL: 915-542-1991
FAX: 542-7984

ENGINEER'S SEAL

SCALE

DATE	MAY 2016
DESIGN BY	MM/RMP
DRAWN BY	S.D.
CHKD. BY	S.D.
APPD. BY	J.L.M.
JOB NO.	1603

PROJECT NAME

EL PASO INTERNATIONAL AIRPORT
CHECKED BAGGAGE INSPECTION SYSTEM

6701 CONVAIR RD. EL PASO, TEXAS

EL PASO INTERNATIONAL

CITY OF EL PASO

SHEET TITLE

LIGHTING ENLARGED PLAN

E3.1

FILE NO. 238512

SHEET 5 OF 21

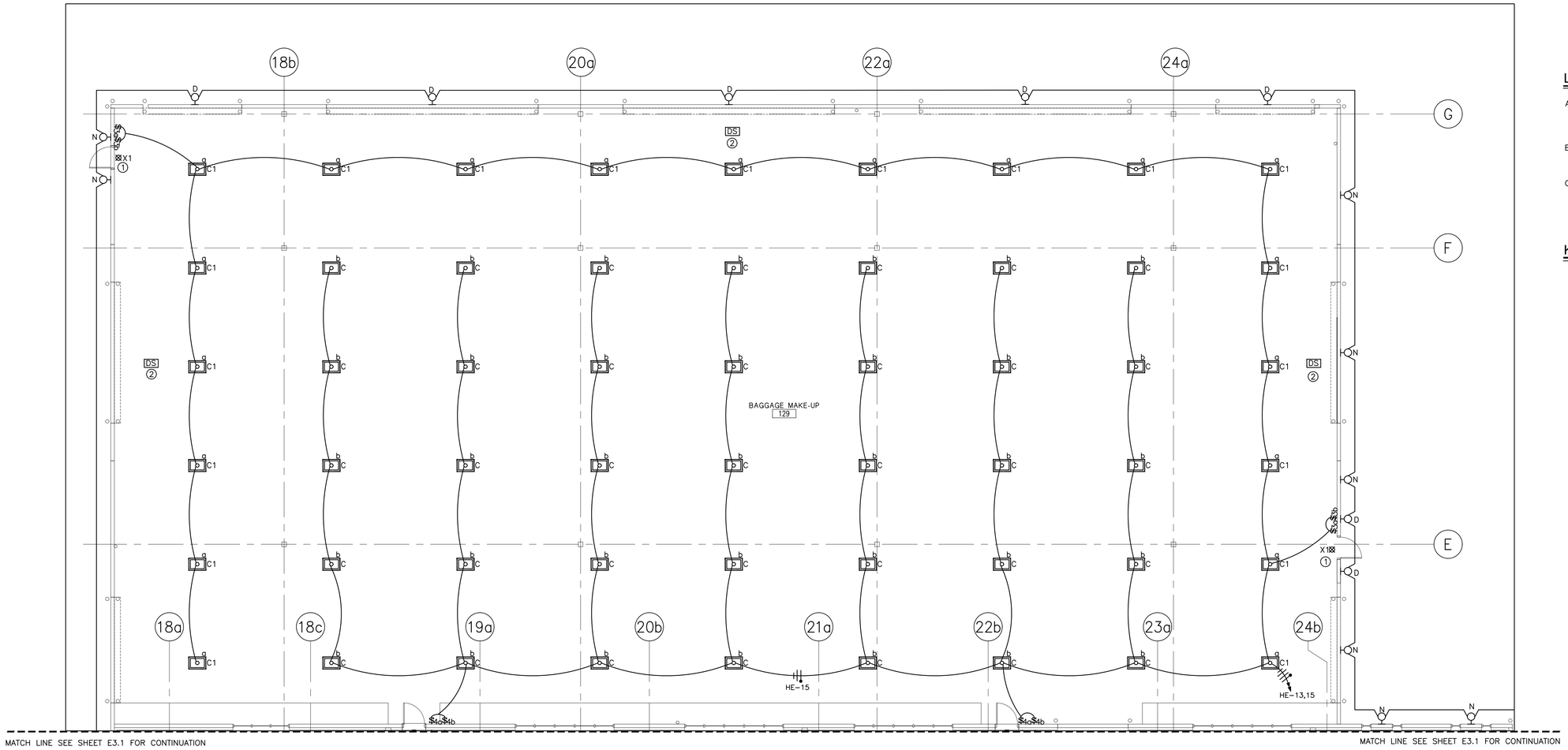

1 LIGHTING ENLARGED FLOOR PLAN

SCALE 1/8" = 1'-0"

PLAN NORTH

LIGHTING GENERAL NOTES:

A. ALL NEW BUILDING ADDITION LIGHTING, INTERIOR AND EXTERIOR, IS SERVED FROM EMERGENCY GENERATOR, THEREFORE, NO INTERIOR OR EXTERIOR EMERGENCY LIGHTING WILL BE NECESSARY.

B. COORDINATE MOUNTING HEIGHTS FOR ALL LIGHT FIXTURES, INTERIOR AND EXTERIOR, WITH ARCHITECT BEFORE ROUGH-IN.

C. ALL PENDANT MOUNTED LIGHT FIXTURES TO BE HUNG USING 1/4" THREAD RODS. COORDINATE WITH ARCHITECT FOR EXACT MOUNTING HEIGHT.

KEYED NOTES:

1. ALL EXIT AND EMERGENCY LIGHTS MUST BE CONNECTED TO AN UNSWITCHED HOT CONDUCTOR.
2. PROVIDE AND INSTALL HUBBEL DLC7 DAYLIGHTING CONTROL SENSOR. INSTALL PER MANUFACTURER'S INSTALLATION INSTRUCTIONS. SENSOR TO CONTROL LIGHTS TYPE "C1" AS SHOWN. SEE DETAIL 5/E7.1 ON SHEET E7.1. SENSOR MUST BE CALIBRATED TO SENSE LIGHTING LEVELS AT 30" A.F.F. SENSOR TO BE SET TO MAINTAIN 30 FOOT CANDLE AVERAGE. INSTALL SENSOR ON ROOF STRUCTURE.

OCCUPANCY SENSOR LEGEND

DEVICE	HUBBELL MODEL	DESCRIPTION
DS	DLC7 OR EQUAL	DAYLIGHT CONTROL SENSOR.
$S1	LHMTS1 OR EQUAL	WALL SWITCH DUAL TECHNOLOGY, SELF POWERED, ONE SWITCH
$S2	LHMTD2 OR EQUAL	WALL SWITCH DUAL TECHNOLOGY, SELF POWERED, TWO SWITCH

NOTES:

1. ALL SENSOR LOCATIONS ARE APPROXIMATE, REFER TO MANUFACTURERS INSTALLATION INSTRUCTIONS PRIOR TO INSTALLATION.

2. ULTRASONIC CEILING MOUNT SENSORS SHOULD BE LOCATED A MINIMUM OF SIX FEET FROM HVAC SUPPLY/RETURN VENTS.

3. CONTRACTOR IS RESPONSIBLE FOR: PROPER SENSITIVITY & TIME DELAY SETTINGS (FOR NON-ADAPTIVE PRODUCTS), RECOMMENDED PLACEMENT, AND FIELD VERIFICATION OF CIRCUITS WITH IN RESPECT TO POWER PLACEMENT.

4. CONTRACTOR IS RESPONSIBLE FOR FIELD VERIFICATION OF REQUIRED NUMBER OF POWER PACKS:
   - ONE POWER PACK IS REQUIRED FOR EACH CIRCUIT TO BE CONTROLLED.
   - ONE POWER PACK IS REQUIRED FOR EVERY THREE SENSORS IN THE ZONE.
   - IF MULTIPLE CIRCUITS ARE TO BE CONTROLLED BY A SENSOR, AN AUXILIARY RELAY CAN BE USED IN CONJUNCTION WITH THE POWER PACK.
   - THE MAXIMUM NUMBER OF SENSORS THAT CAN BE PUT ON A POWER PACK IS TO BE REDUCED BY ONE FOR EACH SLAVE PACK USED.

5. SENSORS MOUNTED OVER THE DOOR MUST BE PLACED ONE FOOT INSIDE THE THRESHOLD.

6. CONTRACTOR IS RESPONSIBLE FOR ENSURING THAT THE SENSOR BILL OF MATERIALS COMPLIES WITH THE SENSOR DESIGN AND LAYOUT SPECIFICATIONS.

7. CONTRACTOR IS RESPONSIBLE FOR INSTALLING EQUIPMENT IN COMPLIANCE WITH LOCAL CODE.

8. ALL SENSORS TO BE SET TO TURN OFF AT 15 MINUTES.

9. WALL MOUNTED OCCUPANCY SENSORS MUST NOT BE INSTALLED BEHIND DOORS.

COM*check* Software Version 4.0.2.0

Interior Lighting Compliance Certificate

Section 1: Project Information

Energy Code: **2009 IECC**
Project Title:
Project Type: Alteration

Construction Site: Owner/Agent: Designer/Contractor:

Section 2: Interior Lighting and Power Calculation

A Area Category	B Floor Area (ft2)	C Allowed Watts / ft2	D Allowed Watts (B x C)
Transportation	41615	1	41615
Total Allowed Watts =			41615

Section 3: Interior Lighting Fixture Schedule

A Fixture ID : Description / Lamp / Wattage Per Lamp / Ballast	B Lamps/ Fixture	C # of Fixtures	D Fixture Watt.	E (C X D)
Transportation (41615 sq.ft.)				
A: LED Panel 40W.	1	92	40	3680
B: LED PAR 18W.	1	3	18	54
C: LED Panel 110W.	1	85	110	9350
C1: LED Panel 110W.	1	19	110	2090
E: Other:	1	15	48	720
F: Other:	1	20	48	960
J: Other:	1	10	32	320
K: LED Panel 44W.	1	14	44	616
L: Other:	1	16	32	512
Total Proposed Watts =				18302

Section 4: Requirements Checklist

Interior Lighting PASSES

Lighting Wattage:
☐ 1. Total proposed watts must be less than or equal to total allowed watts.

Allowed Watts	Proposed Watts	Complies
41615	18302	Passes

Controls, Switching, and Wiring:
☐ 2. Daylight zones under skylights more than 15 feet from the perimeter have lighting controls separate from daylight zones adjacent to vertical fenestration.
☐ 3. Daylight zones have individual lighting controls independent from that of the general area lighting.

Exceptions:
Contiguous daylight zones spanning no more than two orientations are allowed to be controlled by a single controlling device.
Daylight spaces enclosed by walls or ceiling height partitions and containing two or fewer light fixtures are not required to have a separate switch for general area lighting.

☐ 4. Independent controls for each space (switch/occupancy sensor).

Exceptions:
Areas designated as security or emergency areas that must be continuously illuminated.
Lighting in stairways or corridors that are elements of the means of egress.

☐ 5. Master switch at entry to hotel/motel guest room.
☐ 6. Individual dwelling units separately metered.
☐ 7. Medical task lighting or art/history display lighting claimed to be exempt from compliance has a control device independent of the control of the nonexempt lighting.
☐ 8. Each space required to have a manual control also allows for reducing the connected lighting load by at least 50 percent by either controlling all luminaires, dual switching of alternate rows of luminaires, alternate luminaires, or alternate lamps, switching the middle lamp luminaires independently of other lamps, or switching each luminaire or each lamp.

Exceptions:
Only one luminaire in space.
An occupant-sensing device controls the area.
The area is a corridor, storeroom, restroom, public lobby or sleeping unit.
Areas that use less than 0.6 Watts/sq.ft.

☐ 9. Automatic lighting shutoff control in buildings larger than 5,000 sq.ft.

Exceptions:
Sleeping units, patient care areas, and spaces where automatic shutoff would endanger safety or security.

☐ 10. Photocell/astronomical time switch on exterior lights.

Exceptions:
Lighting intended for 24 hour use.

☐ 11. Tandem wired one-lamp and three-lamp ballasted luminaires (No single-lamp ballasts).

Exceptions:
Electronic high-frequency ballasts; Luminaires on emergency circuits or with no available pair.

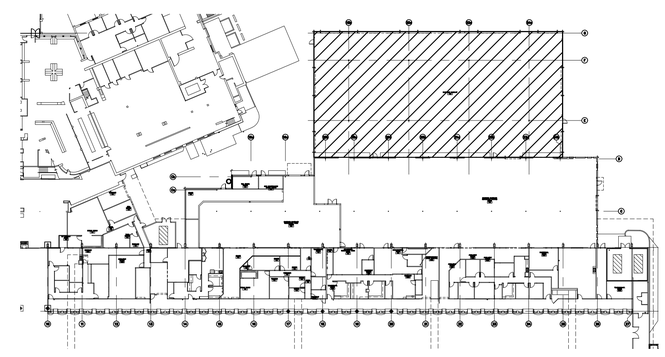

KEY PLAN

SCALE : N.T.S.

ALPHA ENGINEERING, INC.
ENGINEERING CONSULTANTS
1818 E. RIO GRANDE • EL PASO, TEXAS 79902
TEL. (915) 838-9900• FAX. (915) 838-9909
REGISTRATION # F005236

REFERENCES -- BENCHMARK

DATE	REVISIONS	BY

CONSULTANT'S NAME

mijares • mora
ARCHITECTS INC.
EL PASO, TEXAS 79912
FAX: 915-542-1984
TEL: 915-542-1991

ENGINEER'S SEAL

SCALE

DATE	MAY 2016
DESIGN BY	MM/RP
DRAWN BY	S.D.
CHKD. BY	S.D.
APPD. BY	J.L.M.
JOB NO.	1603

PROJECT NAME

EL PASO INTERNATIONAL AIRPORT
CHECKED BAGGAGE INSPECTION SYSTEM

6701 CONVAIR RD. EL PASO, TEXAS

EL PASO INTERNATIONAL

CITY OF EL PASO

SHEET TITLE

LIGHTING ENLARGED PLAN

E3.2

FILE NO. 238512

SHEET 11 OF 21

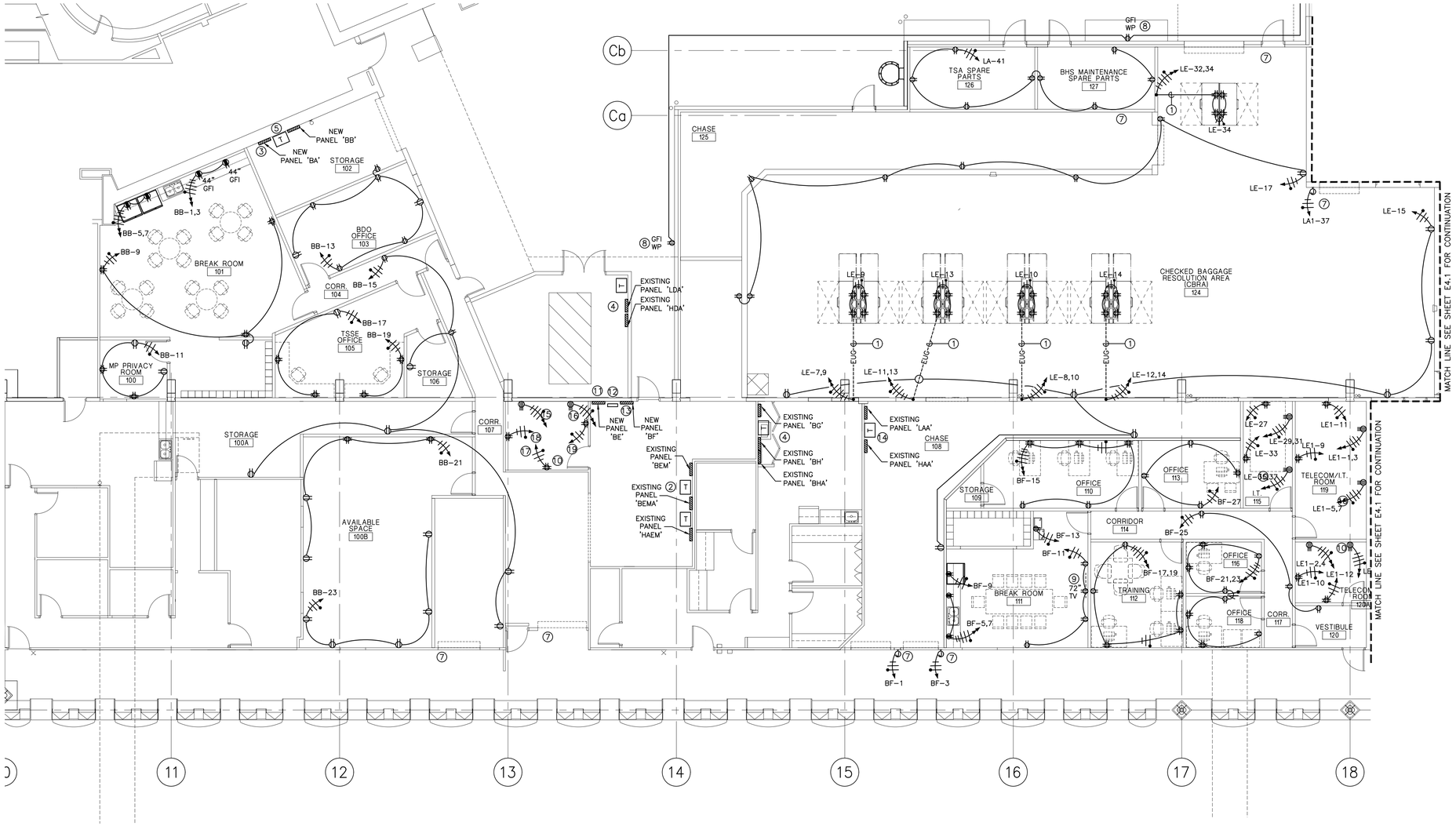

1 POWER ENLARGED FLOOR PLAN

SCALE 1/8" = 1'-0"

PLAN NORTH

KEYED NOTES:

1. CONTRACTOR TO CUT AND PATCH CONCRETE AS NECESSARY TO INSTALL 3/4" UG CONDUIT TO PROVIDE POWER TO WORK STATION. RUN CONDUIT FROM HALF WALL AT WORK STATION BACK TO NEAREST WALL AND THEN UP TO ABOVE SUSPENDED CEILING.
2. EXISTING PANELBOARDS 'HAEM', 'BEMA', AND 'BEM' AS WELL AS THEIR ASSOCIATED TRANSFORMERS TO BE RELOCATED AS SHOWN. CONTRACTOR TO IDENTIFY AND EXTEND EXISTING ASSOCIATED BRANCH CIRCUITS, CONDUITS AND MAIN FEEDERS AS NECESSARY TO NEW LOCATION. CONTRACTOR TO ENSURE CIRCUIT CONTINUITY OF EXISTING CIRCUITS. CONTRACTOR TO IDENTIFY AND REMOVE UNUSED BRANCH CIRCUITS AS NECESSARY. COORDINATE NEW CIRCUIT ROUTING WITH NEW CONVEYOR SYSTEM AND EXISTING FACILITIES.
3. CONTRACTOR TO REPLACE AND RELOCATE EXISTING PANEL BOARD 'BA' AS SHOWN. PROVIDE AND INSTALL NEW PANELBORAD 'BA' 277/480V,3 PH, 4W, 225A CB, SURFACE MOUNTED, COPPER BUS, DOOR-IN-DOOR, 42 CIRCUITS TO REPLACE EXISTING AT THIS LOCATION. CONTRACTOR TO PULL EXISTING MAIN FEEDERS BACK TO MAIN PANEL AND ABANDON EXISTING CONDUIT CONDUIT. RUN A NEW 2 1/2" FROM MAIN PANEL WITH 4-#4/0 CU CONDUCTORS AND 1-#2 CU GND. COORDINATE WITH OWNER FOR MAIN PANEL LOCATION AND CONDUIT ROUTE. CONTRACTOR TO IDENTIFY AND RECONNECT WORKING BRANCH CIRCUITS AND ENSURE CIRCUIT CONTINUITY. CONTRACTOR TO IDENTIFY AND REMOVE UNUSED BRANCH CIRCUITS AS NECESSARY.
4. EXISTING PANELS AND TRANSFORMERS ARE SHOWN AS REFERENCE ONLY NO WORK REQUIRED.
5. PROVIDE AND INSTALL NEW 75KVA TRANSFORMER 'BAB', 480-120/208V, DELTA-WYE, COPPER WINDINGS, K-4 FACTOR, HIGH EFFICIENCY TO POWER TO NEW PANELBOARD 'BB'.
6. CONTRACTOR TO REPLACE AND RELOCATE EXISTING PANEL BOARD 'BB' AS SHOWN. PROVIDE AND INSTALL NEW PANELBORAD 'BB' 120/208V, 3 PH, 4W, 200A CB, SURFACE MOUNTED, COPPER BUS, DOOR-IN-DOOR, 42 CIRCUITS TO REPLACE EXISTING. RUN A NEW 2" CONDUIT FROM NEW 75 KVA 'BAB' WITH 4-#3/0 CU CONDUCTORS AND 1-#4 CU GND. CONTRACTOR TO IDENTIFY AND RECONNECT WORKING BRANCH CIRCUITS AND ENSURE CIRCUIT CONTINUITY. CONTRACTOR TO IDENTIFY AND REMOVE UNUSED BRANCH CIRCUITS AS NECESSARY.
7. PROVIDE AND INSTALL J-BOX ADJACENT TO NEW FIRE DOOR FOR POWER TO DOOR. CONTRACTOR TO MAKE ALL NECESSARY CONNECTIONS TO CONNECT NEW FIRE DOOR TO EXISTING FIRE ALARM CONTROL PANEL.
8. PROVIDED AND INSTALL GFI OUTLET ON EXTERIOR WALL PROVIDE IN-USE METAL WATER PROOF COVER.
9. PROVIDE AND INSTALL OUTLET FOR POWER TO TV AT 72" A.F.F. COORDINATE WITH OWNER FOR EXACT LOCATION BEFORE ROUGH-IN
10. PROVIDE AND INSTALL (2) 30 AMP. 208, 1PH, NEMA LG-30 IN IT ROOM FOR SERVER RACK. CONTRACTOR TO RUN 30 AMP CIRCUIT WITH 3/4" CONDUIT WITH 2-#10 CU. CONDRS. AND 1-#10 CU. GND. PROVIDE AND INSTALL (2) 20 AMP, 120V, 1 PH DEDICATED QUAD OUTLETS FOR SERVER RACK. COORDINATE WITH IT PERSONNEL FOR EXACT LOCATION AND REQUIREMENTS BEFORE DOING ANY WORK.
11. CONTRACTOR TO REPLACE EXISTING PANEL BOARD 'BE' WITH A NEW PANELBORAD 'BA' 277/480V,3 PH, 4W, 100A CB, SURFACE MOUNTED, COPPER BUS, DOOR-IN-DOOR, 42 CIRCUITS. REUSE EXISTING MAIN FEEDERS AND CONDUIT. CONTRACTOR TO IDENTIFY AND RECONNECT WORKING BRANCH CIRCUITS AND ENSURE CIRCUIT CONTINUITY. CONTRACTOR TO IDENTIFY AND REMOVE UNUSED BRANCH CIRCUITS AS NECESSARY.
12. PROVIDE AND INSTALL NEW 45KVA TRANSFORMER 'BEF', 480-120/208V, DELTA-WYE, COPPER WINDINGS, K-4 FACTOR, HIGH EFFICIENCY TO POWER TO NEW PANELBOARD 'BB'.
13. CONTRACTOR TO REPLACE PANEL BOARD 'BF' WITH A NEW PANELBORAD 'BF' 120/208V, 3 PH, 4W, 125A CB, SURFACE MOUNTED, COPPER BUS, DOOR-IN-DOOR, 42 CIRCUITS TO REPLACE EXISTING. RUN A NEW 1 1/4" CONDUIT FROM NEW 45 KVA 'BEF' WITH 4-#2 CU CONDUCTORS AND 1-#8 CU GND. CONTRACTOR TO IDENTIFY AND RECONNECT WORKING BRANCH CIRCUITS AND ENSURE CIRCUIT CONTINUITY. CONTRACTOR TO IDENTIFY AND REMOVE UNUSED BRANCH CIRCUITS AS NECESSARY.
14. EXISTING PANELBOARDS 'HAA' AND 'LA' AS WELL AS THEIR ASSOCIATED TRANSFORMERS TO BE RELOCATED AS SHOWN. CONTRACTOR TO IDENTIFY AND EXTEND EXISTING ASSOCIATED BRANCH CIRCUITS, CONDUITS AND MAIN FEEDERS AS NECESSARY TO NEW LOCATION. CONTRACTOR TO ENSURE CIRCUIT CONTINUITY OF EXISTING CIRCUITS. CONTRACTOR TO IDENTIFY AND REMOVE UNUSED BRANCH CIRCUITS AS NECESSARY. COORDINATE NEW CIRCUIT ROUTING WITH NEW CONVEYOR SYSTEM AND EXISTING FACILITIES.
15. HOME RUN CIRCUIT TO EXITING PANELBOARD 'BEM' LOCATED IN EXISTING ELECTRICAL ROOM. CONTRACTOR TO REMOVE EXISTING 20A/1P CB IN SPACES 21 AND 23 AND PROVIDE AND INSTALL NEW 30A/2P CB ON THESE SPACES. CONTRACTOR TO PROVIDE AND INSTALL 3/4" CONDUIT WITH 3-#10 CU CONDUCTORS AND 1-#10 CU GND.
16. HOME RUN CIRCUIT TO EXITING PANELBOARD 'BEM' LOCATED IN EXISTING ELECTRICAL ROOM. CONTRACTOR TO REMOVE EXISTING 20A/1P CB IN SPACES 25 AND 27 AND PROVIDE AND INSTALL NEW 30A/2P CB ON THESE SPACES. CONTRACTOR TO PROVIDE AND INSTALL 3/4" CONDUIT WITH 3-#10 CU CONDUCTORS AND 1-#10 CU GND.
17. HOME RUN CIRCUIT TO EXISTING AVAILABLE 20A/1P SPARE CB ON SPACE 29 IN EXISTING PANELBOARD 'BEM' LOCATED IN ELECTRICAL ROOM.
18. HOME RUN CIRCUIT TO EXISTING AVAILABLE 20A/1P SPARE CB ON SPACE 31 IN EXISTING PANELBOARD 'BEM' LOCATED IN ELECTRICAL ROOM.
19. HOME RUN CIRCUIT TO EXISTING AVAILABLE 20A/1P SPARE CB ON SPACE 33 IN EXISTING PANELBOARD 'BEM' LOCATED IN ELECTRICAL ROOM.

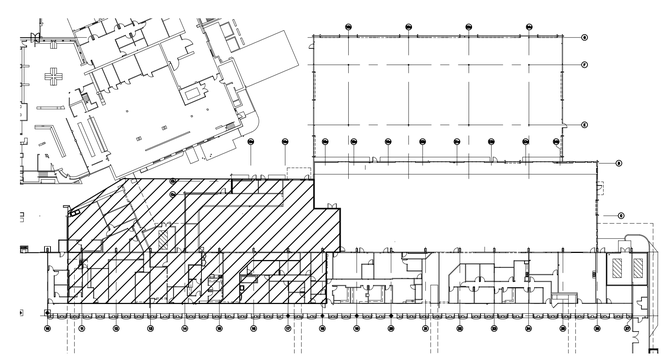

KEY PLAN

SCALE : N.T.S.

ALPHA ENGINEERING, INC.
ENGINEERING CONSULTANTS
1818 E. RIO GRANDE • EL PASO, TEXAS 79902
TEL. (915) 838-9900• FAX. (915) 838-9909
REGISTRATION # F005236

REFERENCES -- BENCHMARK

DATE	REVISIONS	BY

CONSULTANT'S NAME
mijares mora
ARCHITECTS INC.
EL PASO, TEXAS 79912
111 N. FESTIVAL
TEL 915-542-1991
FAX 542-7934

ENGINEER'S SEAL

SCALE

DATE	MAY 2016
DESIGN BY	MM/RP
DRAWN BY	S.D.
CHKD. BY	S.D.
APPD. BY	J.L.M.
JOB NO.	1603

PROJECT NAME

EL PASO INTERNATIONAL AIRPORT
CHECKED BAGGAGE INSPECTION SYSTEM

6701 CONVAIR RD. EL PASO, TEXAS

CITY OF EL PASO

SHEET TITLE

POWER ENLARGED PLAN

E4.0

FILE NO. 238512

SHEET 13 OF 21

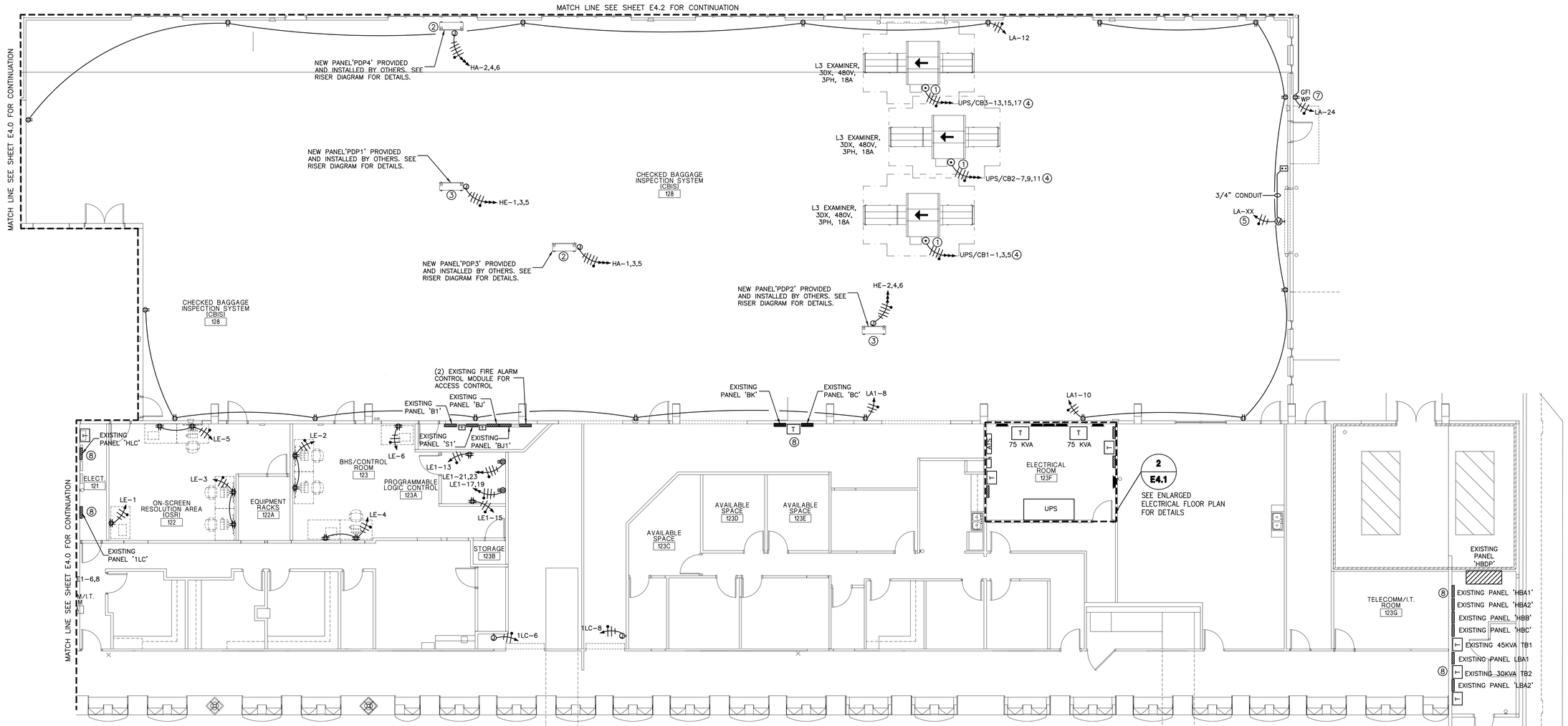

1 POWER ENLARGED FLOOR PLAN

SCALE 1/8" = 1'-0"

PLAN NORTH

KEYED NOTES:

1. STUBB-UP CONDUIT AND MAKE CONNECTIONS TO L3 EXAMINER TRANSFORMER. VERIFY EXACT STUB-UP LOCATION AND REQUIREMENTS WITH BNP BEFORE ROUGH-IN.
2. APPROXIMATE LOCATION OF CONVEYOR CONTROL PANEL. CONTROL PANEL TO BE INSTALLED BY BAGGAGE HANDLING SYSTEM CONTRACTOR (SEE 'B' SERIES DRAWINGS). CONTRACTOR TO LEAVE 20FT OF WIRING PIGTAIL FOR CONNECTIONS BY BAGGAGE HANDLING SYSTEM CONTRACTOR. COORDINATE WITH CONVEYOR INSTALLER BEFORE DOING ANY WORK. SEE DETAILS 6/E7.1 ON SHEET E7.1.
3. APPROXIMATE LOCATION OF EMERGENCY CONVEYOR CONTROL PANEL. CONTROL PANEL TO BE PROVIDE AND INSTALLED BY BNP CONTRACTOR (SEE 'B' SERIES DRAWINGS). CONTRACTOR TO LEAVE 20FT OF WIRING PIGTAIL FOR POWER TO PDP PANEL. COORDINATE WITH BNP AND EPIA PERSONNEL FOR EXACT LOCATION BEFORE DOING ANY WORK. SEE DETAILS 6/7.1 ON SHEET E7.1
4. HOME RUN CIRCUIT THROUGH UPS FOR EMERGENCY POWER SUPPLY. SEE RISER DIAGRAM FOR DETAILS.
5. PROVIDE AND INSTALL J-BOX ADJACENT TO ROLLING DOOR TO PROVIDE POWER TO MOTOR. CONTRACTOR TO INSTALL 3/4" CONDUIT BACK TO MOTOR CONTROL AND MAKE ALL NECESSARY CONNECTION COORDINATE WITH ROLLING DOOR INSTALLER FOR EXACT REQUIREMENTS BEFORE DOING ANY WORK.
6. PROVIDE AND INSTALL (2) 30 AMP. 208, 1PH, NEMA LG-30 IN IT ROOM FOR SERVER RACK. CONTRACTOR TO RUN 30 AMP CIRCUIT WITH 3/4" CONDUIT WITH 2-#10 CU. CONDRS. AND 1-#10 CU. GND. PROVIDE AND INSTALL (2) 20 AMP, 120V, 1 PH DEDICATED QUAD OUTLETS FOR SERVER RACK. COORDINATE WITH IT PERSONNEL FOR EXACT LOCATION AND REQUIREMENTS BEFORE DOING ANY WORK.
7. PROVIDED AND INSTALL GFI OUTLET ON EXTERIOR WALL PROVIDE IN-USE METAL WATER PROOF COVER PLATE.
8. EXISTING PANELS AND TRANSFORMERS AS SHOWN AS REFERENCE ONLY. NO WORK REQUIRED.

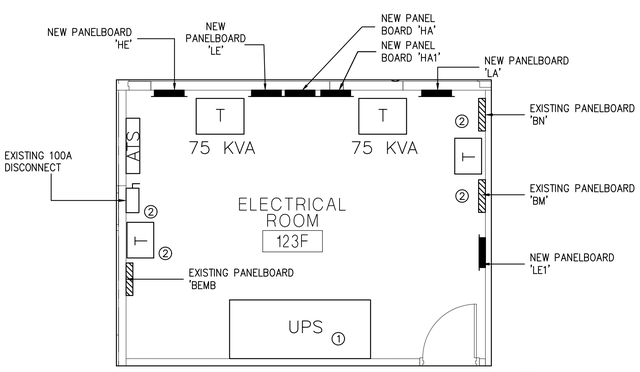

2/E4.1 1 ENLARGED ELECTRICAL FLOOR PLAN

SCALE 1/4" = 1'-0"

PLAN NORTH

KEYED NOTES:

1. NEW 60KW. UPS PROVIDED BY OTHERS AND INSTALLED BY CONTRACTOR. SEE RISER DIAGRAM ON SHEET E7.0.
2. EXISTING PANELBOARDS AND ASSOCIATED TRANSFORMERS TO REMAIN AS IS.

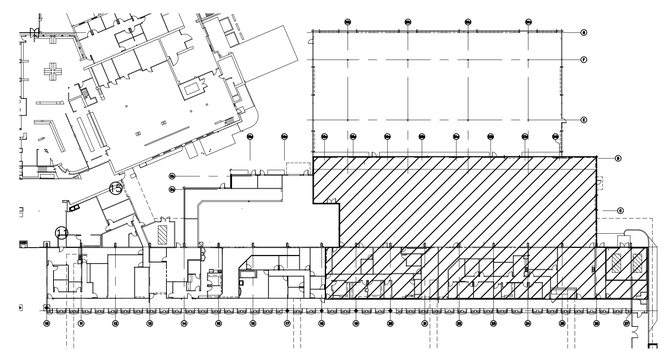

KEY PLAN

SCALE : N.T.S.

ALPHA ENGINEERING, INC.
ENGINEERING CONSULTANTS
1818 E. RIO GRANDE • EL PASO, TEXAS 79902
TEL. (915) 838-9900• FAX. (915) 838-9909
REGISTRATION # F005236

REFERENCES -- BENCHMARK

DATE	REVISIONS	BY

CONSULTANT'S NAME

mijares • mora
ARCHITECTS INC.
EL PASO, TEXAS 79912
FAX. 915-542-1934
TEL. 915-542-1931
111 N. ESTRIAL

ENGINEER'S SEAL

SCALE

DATE	MAY 2016
DESIGN BY	MM/RP
DRAWN BY	S.D.
CHKD. BY	JLM
APPD. BY	JLM
JOB NO.	1603

PROJECT NAME

EL PASO INTERNATIONAL AIRPORT
CHECKED BAGGAGE INSPECTION SYSTEM
6701 CONVAIR RD. EL PASO, TEXAS

CITY OF EL PASO

SHEET TITLE

POWER ENLARGED PLAN

E4.1

FILE NO. 238512

SHEET 8 OF 21

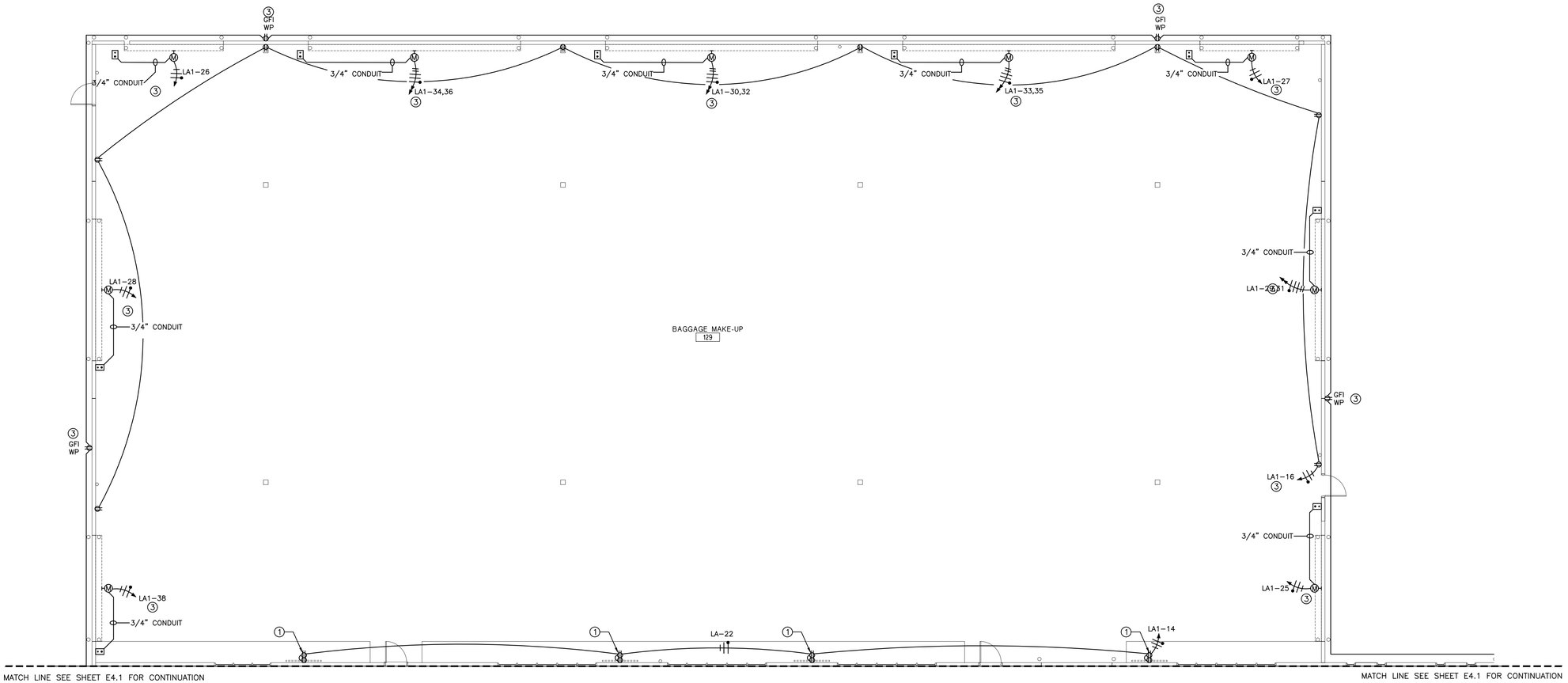

1 POWER ENLARGED FLOOR PLAN

SCALE 1/8" = 1'-0"

PLAN NORTH

KEYED NOTES:

1. PROVIDE AND INSTALL RECEPTACLE FOR POWER TO SCREEN. CONTRACTOR TO COORDINATE WITH EPIA PERSONNEL FOR EXACT LOCATION AND HEIGHT MOUNTING BEFORE ROUGH-IN.
2. PROVIDE AND INSTALL J-BOX ADJACENT TO ROLLING DOOR TO PROVIDE POWER TO MOTOR. CONTRACTOR TO INSTALL ¾" CONDUIT BACK TO MOTOR CONTROL AND MAKE ALL NECESSARY CONNECTION COORDINATE WITH ROLLING DOOR INSTALLER FOR EXACT REQUIREMENTS BEFORE DOING ANY WORK.
3. PROVIDED AND INSTALL GFI OUTLET ON EXTERIOR WALL PROVIDE IN-USE METAL WATER PROOF COVER PLATE.

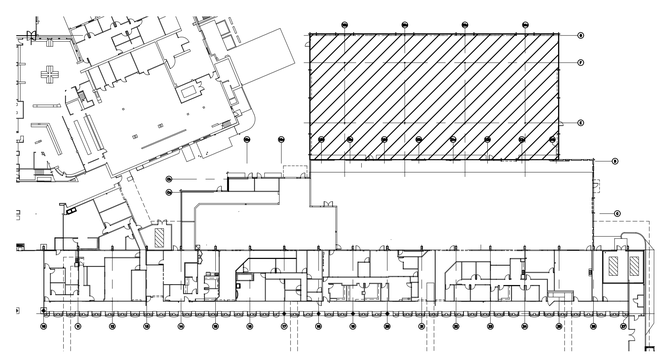

KEY PLAN

SCALE : N.T.S.

ALPHA ENGINEERING, INC.
ENGINEERING CONSULTANTS
1818 E. RIO GRANDE • EL PASO, TEXAS 79902
TEL. (915) 838-9900• FAX. (915) 838-9909
REGISTRATION # F005236

REFERENCES -- BENCHMARK

DATE	REVISIONS	BY

CONSULTANT'S NAME

mijares mora
ARCHITECTS INC.
EL PASO, TEXAS 79912
FAX. 542-7984
TEL. 915-542-1991

ENGINEER'S SEAL

SCALE

DATE	MAY 2016
DESIGN BY	MM/RMP
DRAWN BY	S.D.
CHKD. BY	S.D.
APPD. BY	J.L.M.
JOB NO.	1603

PROJECT NAME

EL PASO INTERNATIONAL AIRPORT
CHECKED BAGGAGE INSPECTION SYSTEM

6701 CONVAIR RD. EL PASO, TEXAS

EL PASO INTERNATIONAL

CITY OF EL PASO

SHEET TITLE

POWER ENLARGED PLAN

E4.2

FILE NO. 238512

SHEET 13 OF 21

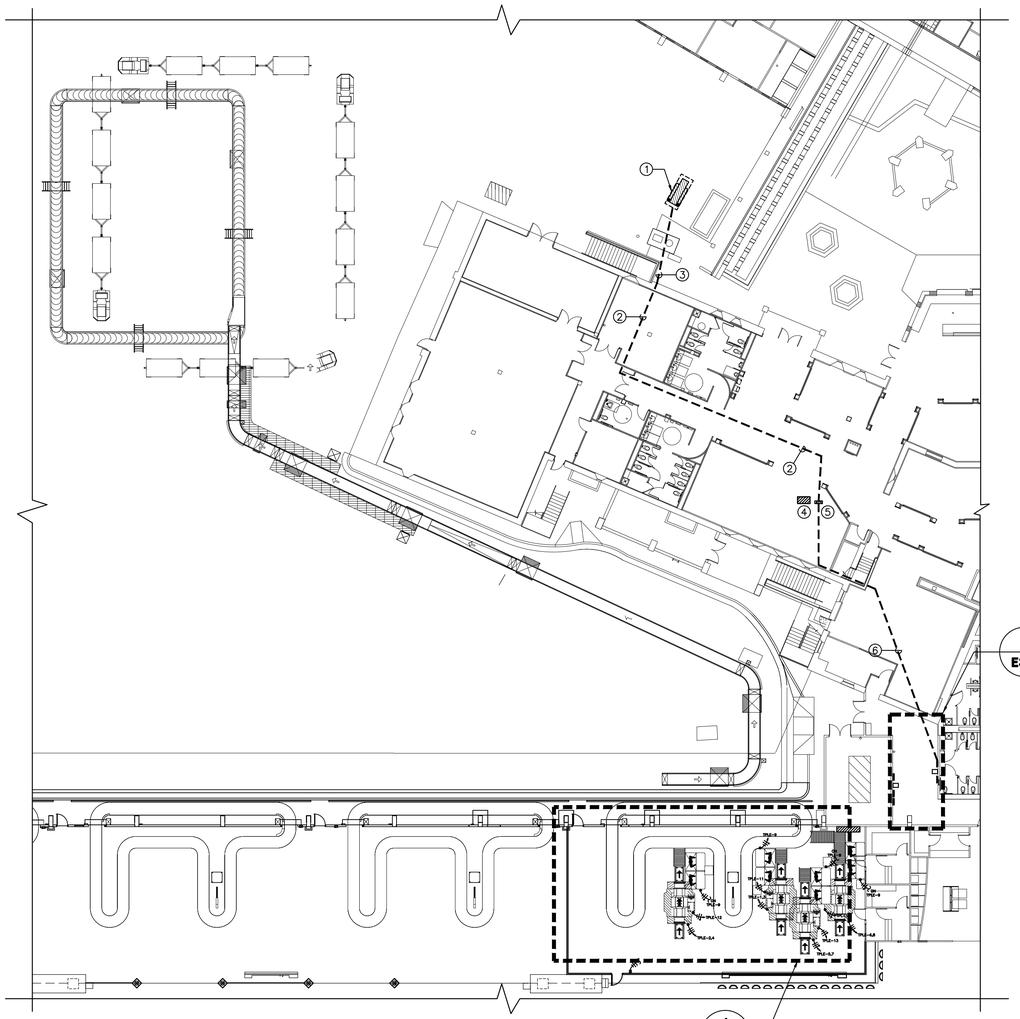

1 TEMPORARY BAGGAGE SYSTEM SITE PLAN

SCALE 1" = 20'-0"

PLAN NORTH

KEYED NOTES:

1. CONTRACTOR TO INSTALL EXISTING 480V, 217KVA, 174KW, 3PH, 261 AMP SPARE GENERATOR ON THIS LOCATION. CONTRACTOR TO COORDINATE WITH EPIA PERSONNEL FOR EXACT LOCATION. GENERATOR IS TO BE PROVIDE BY EPIA. AND INSTALLED BY CONTRACTOR
2. 2" CONDUIT WITH 4–#4/0 CU. CONDRS. AND 1–#6 CU. GND. FROM NEW AUTOMATIC TRANSFER SWITCH TO EMERGENCY GENERATOR. SEE RISER DIAGRAM ON SHEET E3.5. CONTRACTOR TO FIELD VERIFY EXACT CONDUIT ROUTE BEFORE DOING ANY WORK.
3. CONTRACTOR TO CUT AND PATCH EXISTING CONCRETE AS NECESSARY TO INSTALL NEW 2" CONDUIT. CONTRACTOR TO FIELD VERIFY EXACT CONDUIT ROUTE BEFORE DOING ANY WORK.
4. APPROXIMATE LOCATION OF EXISTING 1600A, 277/480V, 3PH, 4W PANELBOARD 'HCDP' IN BASEMENT. COORDINATE WITH EPIA FOR EXACT LOCATION.
5. PROVIDE AND INSTALL NEW 277/480V, 3PH, 4W, 100A AUTOMATIC TRANSFER SWITCH 'TATS' IN BASEMENT ADJACENT TO EXISTING PANELBOARD 'HCDP'. SEE RISER DIAGRAM ON SHEET E3.5.
6. 2" CONDUIT WITH 4–4/0 CU. CONDRS. AND 1–#6 CU. GND. FROM AUTOMATIC TRANSFER SWITCH TO PANELBOARD 'TPHE'. SEE RISER DIAGRAM ON SHEET E4.5. CONTRACTOR TO FIELD VERIFY EXACT CONDUIT ROUTE BEFORE DOING ANY WORK.

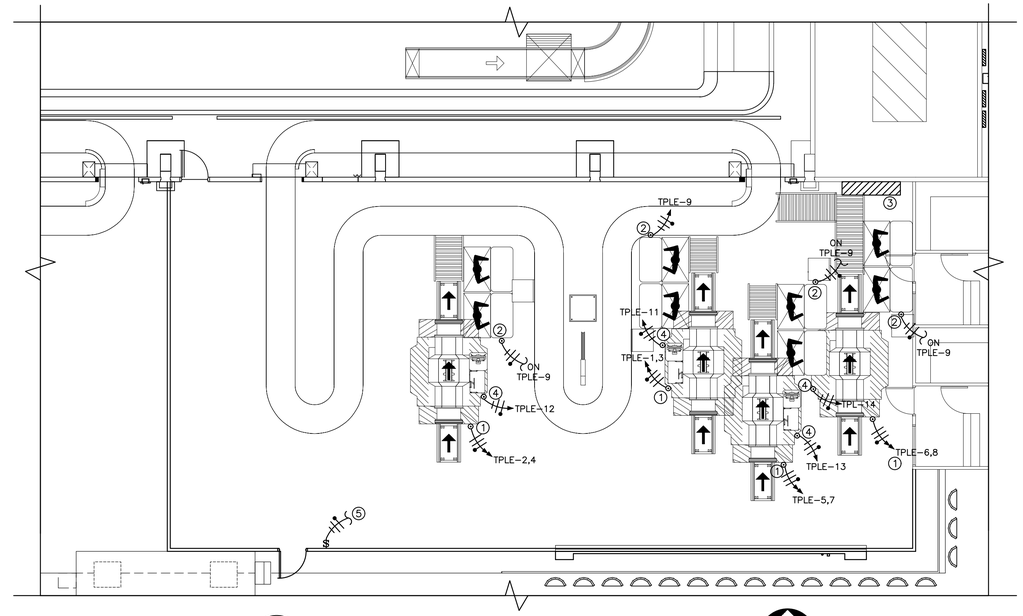

1/E3.4 2 TEMPORARY POWER ENLARGED PLAN

SCALE 1/8" = 1'-0"

PLAN NORTH

KEYED NOTES:

1. CONTRACTOR TO PROVIDE AND INSTALL NEW ANGLE IRON TO PROVIDE POWER AND DATA TO CT–80 MACHINES. SEE DETAIL 2/E3.5 ON SHEET E3.5. COORDINATE WITH EPIA AND BNP PERSONNEL FOR EXACT LOCATION, TYPE OF NEMA PLUG, AND REQUIREMENTS BEFORE DOING ANY WORK.
2. CONTRACTOR TO PROVIDE AND INSTALL NEW ANGLE IRON TO PROVIDE POWER AND DATA TO WORK STATIONS. SEE DETAIL 1/E3.5 ON SHEET E3.5. COORDINATE WITH EPIA AND BNP PERSONNEL FOR EXACT LOCATION AND REQUIREMENTS BEFORE DOING ANY WORK.
3. APPROXIMATE LOCATION OF CONVEYOR CONTROL PANEL. CONTROL PANEL TO BE PROVIDED AND INSTALLED BY BNP. ELECTRICAL CONTRACTOR TO LEAVE 20FT OF WIRING PIGTAIL FOR POWER TO CONTROL PANEL. COORDINATE WITH EPIA AND BNP PERSONNEL BEFORE DOING ANY WORK. SEE RISER DIAGRAM ON SHEET E3.5.
4. CONTRACTOR TO PROVIDE AND INSTALL NEW ANGLE IRON TO PROVIDE POWER AND DATA TO EDS AND BVS. SEE DETAIL 1/E3.5 ON SHEET E3.5. COORDINATE WITH EPIA AND BNP PERSONNEL FOR EXACT LOCATION AND REQUIREMENTS BEFORE DOING ANY WORK. 3/4"
5. THIS AREA CONTAINS EXISTING LIGHTING. CONTRACTOR TO COORDINATE NEW ROOM CONDITIONS AND MAKE ALL THE LIGHTING ADJUSTMENTS NECESSARY FOR NEW FLOOR PLAN LAYOUT. PROVIDE AND INSTALL NEW SWITCH TO CONTROL EXISTING LIGHTS IN THIS AREA. MAINTAIN CIRCUIT CONTINUITY FOR EXISTING LIGHTS.

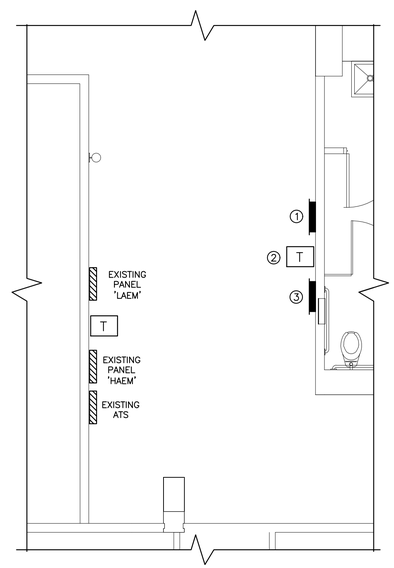

3/E3.4 3 ELECTRICAL ROOM ENLARGED PLAN

SCALE 1/8" = 1'-0"

PLAN NORTH

KEYED NOTES:

1. PROVIDE AND INSTALL NEW TEMPORARY 277/480V, 3PH, 4W, 225A PANELBOARD 'TPHE'. SEE RISER DIAGRAM ON SHEET E3.5.
2. PROVIDE AND INSTALL NEW TEMPORARY 480VΔ–120V/208Y, 3PH, 75 KVA TRANSFORMER 'TXT'. SEE RISER DIAGRAM ON SHEET E3.5.
3. PROVIDE AND INSTALL NEW 120V/208, 3PH, 4W, 125A PANELBOARD 'TPLE'. SEE RISER DIAGRAM ON SHEET E3.5.

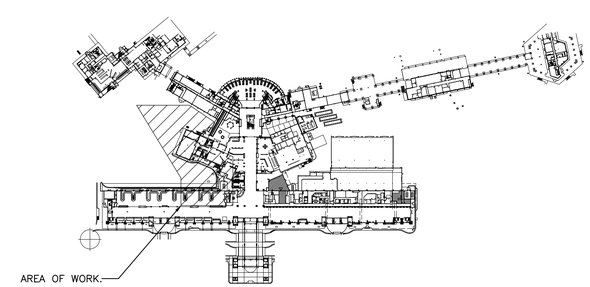

KEY PLAN

SCALE : N.T.S.

ALPHA ENGINEERING, INC.
ENGINEERING CONSULTANTS
1818 E. RIO GRANDE • EL PASO, TEXAS 79902
TEL. (915) 838–9900• FAX. (915) 838–9909
REGISTRATION # F005236

REFERENCES -- BENCHMARK

DATE	REVISIONS	BY

CONSULTANT'S NAME

mijares • mora
ARCHITECTS INC.
EL PASO, TEXAS 79912
FAX: 542-1984
TEL: 915-542-1991

ENGINEER'S SEAL

SCALE

DATE	MAY 2016
DESIGN BY	MM/BNP
DRAWN BY	S.D.
CHKD. BY	S.D.
APPD. BY	J.L.M.
JOB NO.	1603

PROJECT NAME

EL PASO INTERNATIONAL AIRPORT
CHECKED BAGGAGE INSPECTION SYSTEM
6701 CONVAIR RD. EL PASO, TEXAS

EL PASO INTERNATIONAL

CITY OF EL PASO

SHEET TITLE

POWER ENLARGED PLAN

E4.3

FILE NO. 238512

SHEET 1 OF 21

PANELBOARD SCHEDULE

PANELBOARD "TMH": 277/480 V, 3 PHASE, 4 WIRE, 250 AMP. M.C.B.
SURFACE MOUNTED, COPPER BUS, DOOR–IN–DOOR

LOAD SERVED	CKT. NO.	BREAKER AMPS, POLE	PHASE A B C	BREAKER AMPS, POLE	CKT. NO.	LOAD SERVED
PANELBOARD 'TPHE'	1	200 / 3		45 / 3	2	CU–8
277/480V, 3PH, 4W	3				4	480V, 3PH
VIA ATS	5				6	27.1 MCA
FC–8, 2.9 HP	7	15 / 3		––	8	SPACE
480V, 3PH	9			––	10	SPACE
3.3 MCA	11			––	12	SPACE

PANELBOARD 'TMH' LOAD CALCULATIONS

	LOAD (VA)
PANELBOARD 'TPHE'	146,382
CU–8 @ 125%	28,150
FC–8	2,750
TOTAL	177,282 VA

I = 177,282 VA/ (480V)(1.73) = 213 AMPS
400 AMP, 277/480V, 3 PH., TYPE 1 DISCONNECT 'TPD'
FUSED AT 250 AMPS
2 1/2" CONDUIT WITH 4–#4/0 THHN CU. CONDRS.
1–#4 CU. GND.
FEED TO TRANSFORMER 'TXT'–1: 1–1/2" CONT. W/ 3–#2
THHN CU. CONDRS. AND 1–#8 CU GND.

PANELBOARD SCHEDULE

PANELBOARD "TPHE": 277/480 V, 3 PHASE, 4 WIRE, 200 AMP. M.C.B.
SURFACE MOUNTED, COPPER BUS, DOOR–IN–DOOR

LOAD SERVED	CKT. NO.	BREAKER AMPS, POLE	PHASE A B C	BREAKER AMPS, POLE	CKT. NO.	LOAD SERVED
BNP MOTOR CONTROL	1	150 / 3		90 / 3	2	TRANSFORMER 'TXT'
PANEL 480V/3PH/4W	3				4	480–120/208V, 3PH, 4W
122 FLA	5				6	75 KVA
SPACE	7	––		––	8	SPACE
SPACE	9	––		––	10	SPACE
SPACE	11	––		––	12	SPACE

PANELBOARD 'TPHE' LOAD CALCULATIONS

	LOAD (VA)
BNP MCP	101,382
PANELBOARD 'TPLE' VIA TRANSFORMER	45,000
TOTAL	146,382 VA

I = 106,382 VA/ (480V)(1.73) = 176 AMPS
400 AMP, 277/480V, 3 PH., TYPE 1 250 AMP PANELBOARD
PANELBOARD 'TPHE' FED FROM 225AMP
2 1/2" CONDUIT WITH 4–#4/0 THHN CU. CONDRS.
1–#4 CU. GND.
FEED TO TRANSFORMER 'TXT'–1: 1–1/2" CONT. W/ 3–#2
THHN CU. CONDRS. AND 1–#8 CU GND.

PANELBOARD SCHEDULE

PANELBOARD "TPLE": 120/208 V, 3 PHASE, 4 WIRE, 200 AMP. M.C.B.
SURFACE MOUNTED, COPPER BUS

LOAD SERVED	CKT. NO.	BREAKER AMPS, POLE	PHASE A B C	BREAKER AMPS, POLE	CKT. NO.	LOAD SERVED
REVEAL CT–80	1	20 / 2		20 / 2	2	REVEAL CT–80
208V, 1PH, 30A	3				4	208V, 1PH, 30A
REVEAL CT–80	5	20 / 2		20 / 2	6	REVEAL CT–80
208V, 1PH, 30A	7				8	208V, 1PH, 30A
WORK STATIONS (X4)	9	20/1		20/1	10	BVS MACHINE (X4)
ETD AND BVS STATIONS	11	30/1		30/1	12	ETD AND BVS STATIONS
ETD AND BVS STATIONS	13	30/1		30/1	14	ETD AND BVS STATIONS
SPACE	15	––		20/1	16	SPACE
SPACE	17	––		––	18	SPACE
SPACE	19	––		––	20	SPACE
SPACE	21	––		––	22	SPACE
SPACE	23	––		––	24	SPACE
SPACE	25	––		––	26	SPACE
SPACE	27	––		––	28	SPACE
SPACE	29	––		––	30	SPACE
SPACE	31	––		––	32	SPACE
SPACE	33	––		––	34	SPACE
SPACE	35	––		––	36	SPACE
SPACE	37	––		––	38	SPACE
SPACE	39	––		––	40	SPACE
SPACE	41	––		––	42	SPACE

PANELBOARD 'TPLE' LOAD CALCULATIONS

	LOAD (VA)
CT–80 MACHINE (X4)	31,680
WORK STATIONS (X4)	1,920
BVS MACHINE (X4)	1,920
ETD STATIONS (X4)	9,600
TOTAL	45,120 VA

I = 45,120 VA/ (208V)(1.73) = 125 AMPS
200 AMP, 120/208V, 3 PH., 4 WIRE, PANELBOARD 'TPLE'
FED BY 75 KVA TRANSFORMER
2" CONDUIT WITH 4–2/0 THHN CU. CONDRS.
1–#6 CU. CONDR. GND.

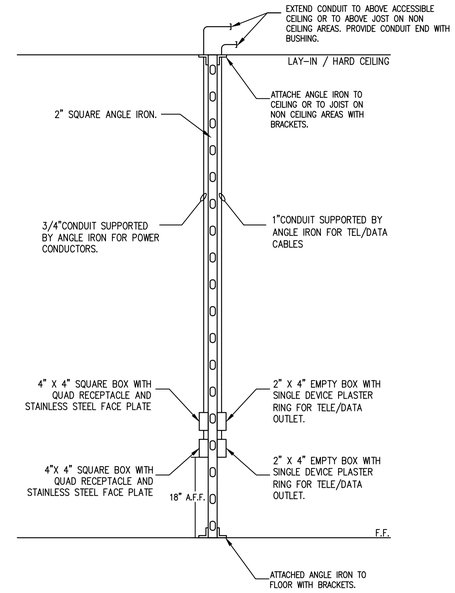

1 / E3.5

ANGLE IRON MOUNTING DETAIL

NTS

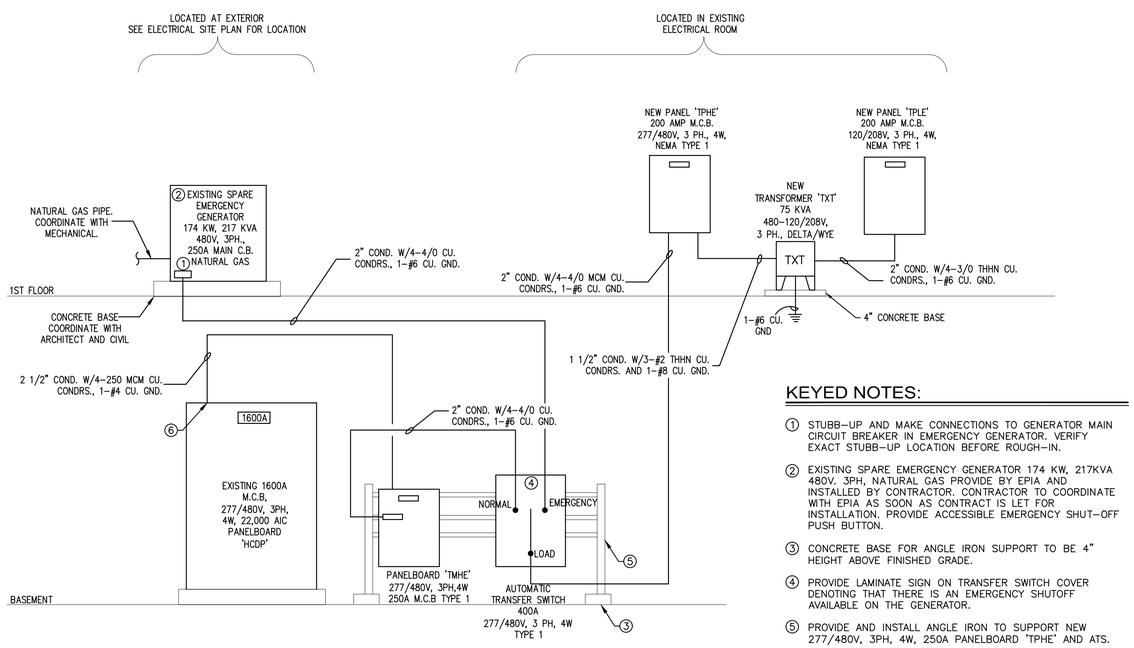

TEMPORARY RISER DIAGRAM

NTS

KEYED NOTES:

1. STUBB–UP AND MAKE CONNECTIONS TO GENERATOR MAIN CIRCUIT BREAKER IN EMERGENCY GENERATOR. VERIFY EXACT STUBB–UP LOCATION BEFORE ROUGH–IN.
2. EXISTING SPARE EMERGENCY GENERATOR 174 KW, 217KVA 480V. 3PH, NATURAL GAS PROVIDE BY EPIA AND INSTALLED BY CONTRACTOR. CONTRACTOR TO COORDINATE WITH EPIA AS SOON AS CONTRACT IS LET FOR INSTALLATION. PROVIDE ACCESSIBLE EMERGENCY SHUT–OFF PUSH BUTTON.
3. CONCRETE BASE FOR ANGLE IRON SUPPORT TO BE 4" HEIGHT ABOVE FINISHED GRADE.
4. PROVIDE LAMINATE SIGN ON TRANSFER SWITCH COVER DENOTING THAT THERE IS AN EMERGENCY SHUTOFF AVAILABLE ON THE GENERATOR.
5. PROVIDE AND INSTALL ANGLE IRON TO SUPPORT NEW 277/480V, 3PH, 4W, 250A PANELBOARD 'TPHE' AND ATS.
6. CONTRACTOR TO CONNECT 4–250 MCM. AND 1–#4 CU. GND. NEW FEEDERS (ONE PER PHASE) TO EXISTING PANELBOAR 'HCDP' BUS. CONTRACTOR TO PROVIDE MATERIAL AS NECESSARY FOR INSTALLATION.

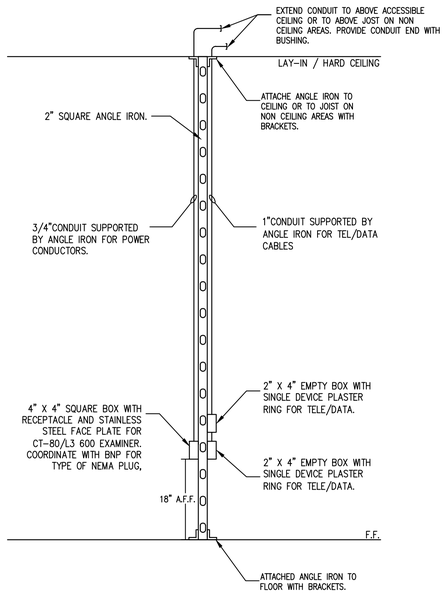

2 / E3.5

ANGLE IRON MOUNTING DETAIL

NTS

ALPHA ENGINEERING, INC.
ENGINEERING CONSULTANTS
1818 E. RIO GRANDE • EL PASO, TEXAS. 79902
TEL: (915) 838–9900• FAX. (915) 838–9909
REGISTRATION # F005236

REFERENCES – BENCHMARK

DATE	REVISIONS	BY

CONSULTANT'S NAME
mijares mora
ARCHITECTS INC.
EL PASO, TEXAS 79912
FAX: 915-542-1934

ENGINEER'S SEAL

SCALE

DATE	MAY 2016
DESIGN BY	MM/RMP
DRAWN BY	S.D.
CHKD. BY	JLM
APPD. BY	JLM
JOB NO.	1603

PROJECT NAME

EL PASO INTERNATIONAL AIRPORT
CHECKED BAGGAGE INSPECTION SYSTEM
6701 CONVAIR RD. EL PASO, TEXAS

CITY OF EL PASO

SHEET TITLE
RISER DIAGRAM AND PANELS

E4.4

FILE NO. 238512

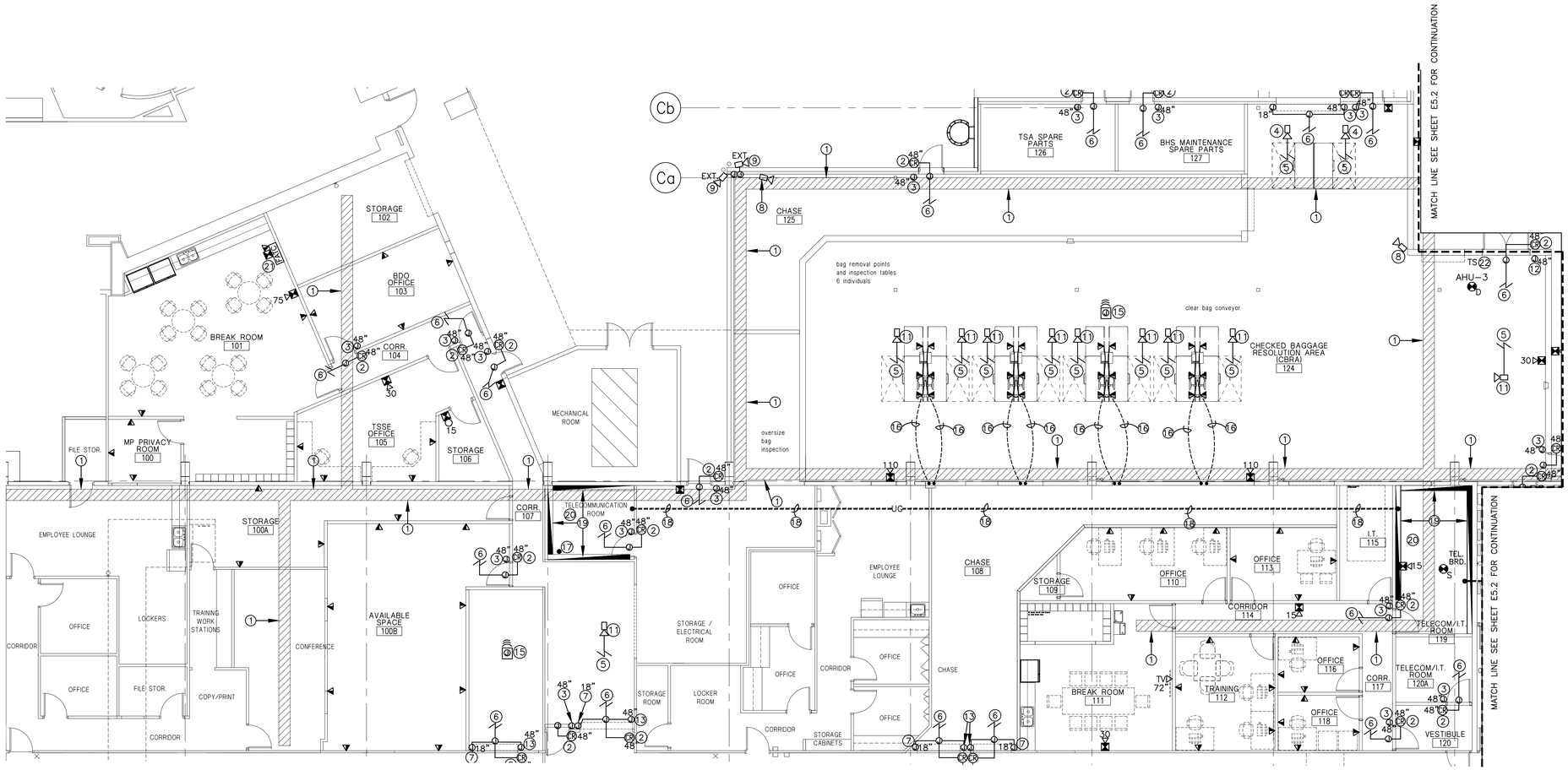

1 SPECIAL SYSTEM ENLARGED FLOOR PLAN

SCALE 1/8" = 1'-0"

PLAN NORTH

KEYED NOTES:

1. CONTRACTOR TO PROVIDE AND INSTALL 12" WIDE, 4" HIGH, WIRE-MESH CABLE TRAY. CABLE TRAY TO BE LEGRAND CABLOFIL CF105/300 OR EQUAL APPROVED BY OWNER. INSTALL WALL BRACKET SUPPORTS OR HANGING SUPPORTS AS NEEDED. EXACT LOCATION OF CABLE TRAY MUST BE COORDINATED WITH ARCHITECTURAL, MECHANICAL, STRUCTURAL PLANS, SECURITY PLANS, AND WITH OWNER BEFORE ROUGH-IN. CABLE TRAY TO BE LABELED "COEP DOITS". CABLE TRAY MUST HAVE A #6 BARE COPPER GROUND ALONG ITS ENTIRE LENGTH. THIS BARE COPPER GROUND TO BE ATTACHED TO THE GROUND BAR IN EVERY I.T. OR TELECOMMUNICATIONS ROOM.
2. PROVIDE AND INSTALL DOOR CARD READER AT 48" A.F.F. CONTRACTOR TO CUT, PATCH, AND PAINT EXISTING WALL OR CEILING IF NECESSARY TO INSTALL NEW DEVICE.
3. PROVIDE AND INSTALL SINGLE GANG DEEP J-BOX WITH PLASTER RING AT 48" A.F.F. FOR CARD READER CONNECTIONS. PROVIDE AND INSTALL 3/4" CONDUIT WITH PULLSTRING TO J-BOX 6" ABOVE DOOR. COORDINATE WITH OWNER'S SECURITY CONTRACTOR FOR EXACT LOCATION AND REQUIREMENTS BEFORE DOING ANY WORK. SEE DETAIL 1/E7.2 ON SHEET E7.2. CONTRACTOR TO CUT, PATCH, AND PAINT EXISTING WALL OR CEILING IF NECESSARY TO INSTALL NEW DEVICE.
4. PROVIDE AND INSTALL 4"X4"X2 1/8" DEEP TWO GANG J-BOX WITH COVER PLATE FOR CCTV CAMERA. INSTALL J-BOX ON THREADED ROD AT CAMERA LOCATION. SEE DETAIL 7/E7.1 ON SHEET E7.1. COORDINATE WITH OWNER'S SECURITY CONTRACTOR FOR EXACT LOCATION AND REQUIREMENTS BEFORE DOING ANY WORK. PROVIDE AND INSTALL 1" CONDUIT WITH PULLSTRING NEW CABLE TRAY. CONTRACTOR TO CUT, PATCH, AND PAINT EXISTING WALL OR CEILING IF NECESSARY TO INSTALL NEW DEVICE.
5. PROVIDE AND INSTALL 1" CONDUIT WITH PULLSTRING FROM CAMERA J-BOX TO NEW CABLE TRAY. COORDINATE WITH OWNER'S SECURITY CONTRACTOR FOR EXACT LOCATION AND REQUIREMENTS BEFORE DOING ANY WORK. CONTRACTOR TO CUT, PATCH, AND PAINT EXISTING WALL OR CEILING IF NECESSARY TO INSTALL NEW DEVICE.
6. PROVIDE AND INSTALL 1" CONDUIT WITH PULLSTRING FROM J-BOX ABOVE DOOR TO NEAREST CABLE TRAY. COORDINATE WITH OWNER'S SECURITY CONTRACTOR FOR EXACT LOCATION AND REQUIREMENTS BEFORE DOING ANY WORK.
7. PROVIDE AND INSTALL SINGLE GANG J-BOX AT 18" A.F.F. FOR DOOR CONTACT WITH 3/4" CONDUIT WITH PULLSTRING TO J-BOX 6" ABOVE DOOR. COORDINATE WITH OWNER'S SECURITY CONTRACTOR FOR EXACT LOCATION AND REQUIREMENTS BEFORE DOING ANY WORK. SEE DETAIL 7/E7.2 ON SHEET E7.2. CONTRACTOR TO CUT, PATCH, AND PAINT EXISTING WALL OR CEILING IF NECESSARY TO INSTALL NEW DEVICE.
8. PROVIDE AND INSTALL 4"X4"X2 1/8" DEEP TWO GANG J-BOX WITH COVER PLATE FOR CCTV CAMERA. INSTALL J-BOX ON WALL AT 10' A.F.F. COORDINATE WITH OWNER SECURITY CONTRACTOR FOR EXACT LOCATION AND REQUIREMENTS BEFORE DOING ANY WORK. CONTRACTOR TO CUT, PATCH, AND PAINT EXISTING WALL OR CEILING IF NECESSARY TO INSTALL NEW DEVICE.
9. PROVIDE AND INSTALL 4"X4"X2 1/8" DEEP J-BOX WITH COVER PLATE FOR CCTV CAMERA. INSTALL J-BOX INSIDE BUILDING. PROVIDE AND INSTALL 3/4" CONDUIT WITH PULLSTRING TO PENETRATE THROUGH EXTERIOR WALL. PROVIDE AND INSTALL 1" CONDUIT WITH PULLSTRING FROM J-BOX TO NEAREST ACCESSIBLE CABLE TRAY. SEE DETAIL 8/E7.2 ON SHEET E7.2. COORDINATE WITH OWNER SECURITY CONTRACTOR FOR EXACT LOCATION AND REQUIREMENTS BEFORE DOING ANY WORK. CONTRACTOR TO CUT, PATCH, AND PAINT EXISTING WALL OR CEILING IF NECESSARY TO INSTALL NEW DEVICE.
10. NOT USED.
11. PROVIDE AND INSTALL 4"X4"X2 1/8" DEEP TWO GANG J-BOX WITH COVER PLATE FOR CCTV CAMERA. INSTALL J-BOX ABOVE CEILING AT CAMERA LOCATION. SEE DETAIL 9/E7.2 ON SHEET E7.2. COORDINATE WITH OWNER'S SECURITY CONTRACTOR FOR EXACT LOCATION AND REQUIREMENTS BEFORE DOING ANY WORK.
12. PROVIDE AND INSTALL SINGLE GANG DEEP J-BOX WITH PLASTER RING AT 48" A.F.F. FOR CARD READER CONNECTIONS. PROVIDE AND INSTALL 3/4" CONDUIT WITH PULLSTRING TO J-BOX 6" ABOVE DOOR. COORDINATE WITH OWNER'S SECURITY CONTRACTOR FOR EXACT LOCATION AND REQUIREMENTS BEFORE DOING ANY WORK. SEE DETAIL 5/E7.2 ON SHEET E7.2. CONTRACTOR TO CUT, PATCH, AND PAINT EXISTING WALL OR CEILING IF NECESSARY TO INSTALL NEW DEVICE.
13. PROVIDE AND INSTALL SINGLE GANG DEEP J-BOX WITH PLASTER RING AT 48" A.F.F. FOR CARD READER CONNECTIONS. PROVIDE AND INSTALL 3/4" CONDUIT WITH PULLSTRING TO J-BOX 6" ABOVE DOOR. COORDINATE WITH OWNER'S SECURITY CONTRACTOR FOR EXACT LOCATION AND REQUIREMENTS BEFORE DOING ANY WORK. SEE DETAIL 7/E7.2 ON SHEET E7.2. CONTRACTOR TO CUT, PATCH, AND PAINT EXISTING WALL OR CEILING IF NECESSARY TO INSTALL NEW DEVICE.
14. NOT USED.
15. PROVIDE AND INSTALL J-BOX ABOVE CEILING FOR WIFI CONNECTIONS. COORDINATE WITH OWNER FOR EXACT LOCATION AND REQUIREMENTS.
16. CONTRACTOR TO CUT AND PATCH CONCRETE AS NECESSARY TO INSTALL 1" U.G. CONDUIT TO PROVIDE POWER TO WORK STATION. RUN CONDUIT FROM HALF WALL AT WORK STATION BACK TO NEAREST WALL AND RISE UP TO CABLE TRAY CONDUIT MUST HAVE BUSHINGS AND PULLSTRING.
17. PROVIDE AND INSTALL 4" CONDUIT WITH BUSHINGS AND PULLSTRING FROM BASEMENT I.T. SYSTEM TO TELECOMMUNICATIONS ROOM ON FIRST FLOOR. STUBB-UP CONDUIT 2" A.F.F. COORDINATE WITH OWNER FOR EXACT LOCATION AND REQUIREMENTS BEFORE DOING ANY WORK.
18. PROVIDE AND INSTALL 4" CONDUIT WITH BUSHINGS AND PULLSTRING FROM TELECOMMUNICATIONS ROOM ON FIRST FLOOR TO TELECOMMUNICATIONS/I.T. ROOM 119. STUBB-UP CONDUIT 2" A.F.F. COORDINATE WITH OWNER FOR EXACT LOCATION AND REQUIREMENTS BEFORE DOING ANY WORK.
19. INSTALL 3/4"X4'X8' A-C GRADE FIRE RETARDANT TREATED PLYWOOD BOARD ON THREE WALLS FROM CORNER TO CORNER. WITH 2" CONDUIT WITH PULLSTRING FROM TELEPHONE BOARD TO LOCAL TELEPHONE SERVICE POINT. COORDINATE WITH OWNER BEFORE DOING ANY WORK.
20. CONTRACTOR TO INSTALL COPPER GROUND BAR AT EACH I.T. ROOM. GROUND BAR MUST BE GROUNDED WITH 1-#6 COPPER CONDUCTOR TO GROUND BAR IN NEAREST PANEL. SEE DETAIL 8/E7.1 ON SHEET E7.1.
21. PROPOSED LOCATION OF NEW FIRE ALARM TERMINAL CABINET. CONTRACTOR TO MAKE CONNECTIONS TO EXISTING FIRE ALARM CONTROL PANEL LOCATED IN AIRPORT DISPATCH OFFICES. NEW TERMINAL CABINET AND DIGITAL DEVICES MUST BE COMPATIBLE TO EXISTING FIRE ALARM SYSTEM. COORDINATE WITH OWNER FOR EXACT LOCATION AND REQUIREMENTS BEFORE DOING ANY WORK.
22. CONTRACTOR TO PROVIDE AND INSTALL DUCT SMOKE DETECTOR TEST SWITCH ON CEILING. COORDINATE WITH MECHANICAL PLANS FOR EXACT LOCATION AND REQUIREMENTS.

GENERAL NOTES: (THIS SHEET ONLY)

CONTRACTOR MUST FOLLOW THE "CITY OF EL PASO TELECOMMUNICATIONS DESIGN AND CONTRUCTIONS STANDARDS REVISION DATE MAY 23RD 2016" FOR EXACT REQUIREMENTS BEFORE DOING ANY WORK.

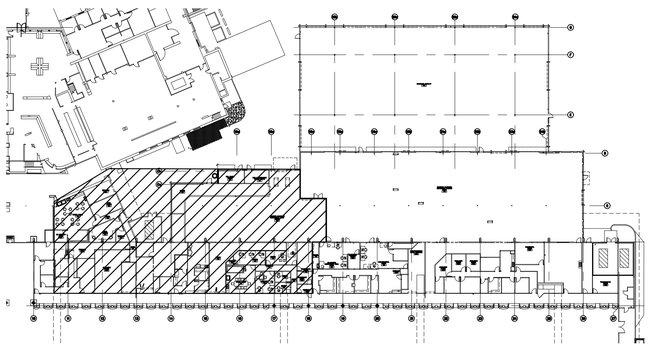

KEY PLAN

SCALE : N.T.S.

ALPHA ENGINEERING, INC.
ENGINEERING CONSULTANTS
1818 E. RIO GRANDE • EL PASO, TEXAS. 79902
TEL. (915) 838-9900• FAX. (915) 838-9909
REGISTRATION # F005236

REFERENCES -- BENCHMARK

DATE	REVISIONS	BY

CONSULTANT'S NAME

mijares • mora
ARCHITECTS INC.
EL PASO, TEXAS 79912
111 N. FESTIVAL
TEL: 915-542-1991
FAX: 542-7594

ENGINEER'S SEAL

SCALE

DATE	MAY 2016
DESIGN BY	MM/RMP
DRAWN BY	S.D.
CHKD. BY	S.D.
APPD. BY	J.L.M.
JOB NO.	1603

PROJECT NAME

EL PASO INTERNATIONAL AIRPORT
CHECKED BAGGAGE INSPECTION SYSTEM

6701 CONVAIR RD. EL PASO, TEXAS

EL PASO INTERNATIONAL AIRPORT

CITY OF EL PASO

SHEET TITLE

SPECIAL SYSTEM ENLARGED PLAN

E5.0

FILE NO. 238512

SHEET 12 OF 21

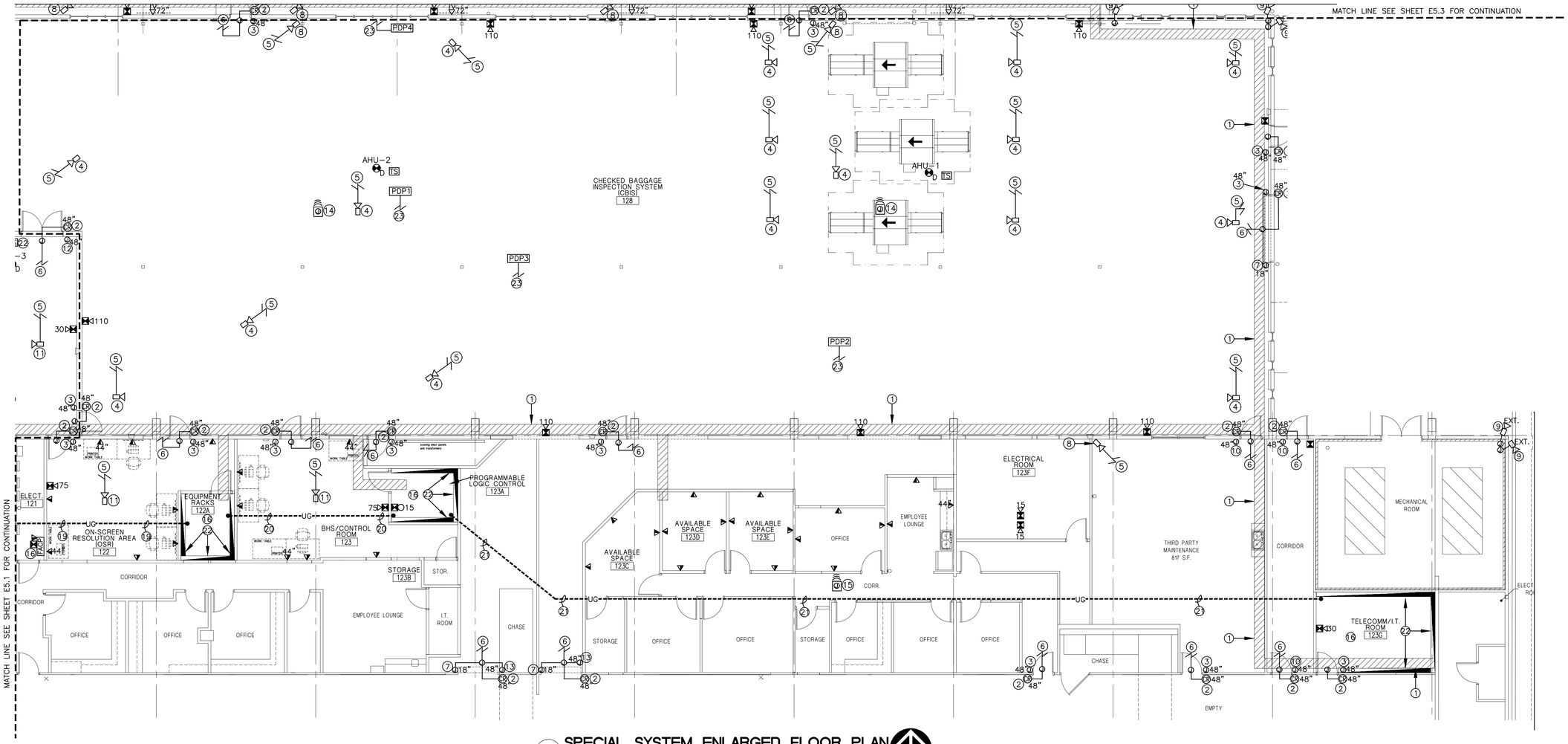

1 SPECIAL SYSTEM ENLARGED FLOOR PLAN

SCALE 1/8" = 1'-0"

PLAN NORTH

KEYED NOTES:

1. CONTRACTOR TO PROVIDE AND INSTALL 12" WIDE, 4" HIGH, WIRE-MESH CABLE TRAY. CABLE TRAY TO BE LEGRAND CABLOFIL CF105/300 OR EQUAL APPROVED BY OWNER. INSTALL WALL BRACKET SUPPORTS OR HANGING SUPPORTS EVERY 3 FEET MINIMUM AS NEEDED. EXACT LOCATION OF CABLE TRAY MUST BE COORDINATED WITH ARCHITECTURAL, MECHANICAL, STRUCTURAL PLANS, SECURITY PLANS, AND WITH OWNER BEFORE ROUGH-IN. CABLE TRAY TO BE LABELED "COEP DOITS". CABLE TRAY MUST HAVE A #6 BARE COPPER GROUND ALONG ITS ENTIRE LENGTH. THIS BARE COPPER GROUND TO BE ATTACHED TO THE GROUND BAR IN EVERY I.T. OR TELECOMMUNICATIONS ROOM.
2. PROVIDE AND INSTALL DOOR CARD READER AT 48" A.F.F. CONTRACTOR TO CUT, PATCH, AND PAINT EXISTING WALL OR CEILING IF NECESSARY TO INSTALL NEW DEVICE.
3. PROVIDE AND INSTALL SINGLE GANG DEEP J-BOX WITH PLASTER RING AT 48" A.F.F. FOR CARD READER CONNECTIONS. PROVIDE AND INSTALL 3/4" CONDUIT WITH PULLSTRING TO J-BOX 6" ABOVE DOOR. COORDINATE WITH OWNER'S SECURITY CONTRACTOR FOR EXACT LOCATION AND REQUIREMENTS BEFORE DOING ANY WORK. SEE DETAIL 1/E7.2 ON SHEET E7.2. CONTRACTOR TO CUT, PATCH, AND PAINT EXISTING WALL OR CEILING IF NECESSARY TO INSTALL NEW DEVICE.
4. PROVIDE AND INSTALL 4"X4"X2 1/8" DEEP TWO GANG J-BOX WITH COVER PLATE FOR CCTV CAMERA. INSTALL J-BOX ON THREADED ROD AT CAMERA LOCATION. SEE DETAIL 7/E7.1 ON SHEET E7.1. COORDINATE WITH OWNER'S SECURITY CONTRACTOR FOR EXACT LOCATION AND REQUIREMENTS BEFORE DOING ANY WORK. PROVIDE AND INSTALL 1" CONDUIT WITH PULLSTRING NEW CABLE TRAY. CONTRACTOR TO CUT, PATCH, AND PAINT EXISTING WALL OR CEILING IF NECESSARY TO INSTALL NEW DEVICE.
5. PROVIDE AND INSTALL 1" CONDUIT WITH PULLSTRING FROM CAMERA J-BOX TO NEW CABLE TRAY. COORDINATE WITH OWNER'S SECURITY CONTRACTOR FOR EXACT LOCATION AND REQUIREMENTS BEFORE DOING ANY WORK. CONTRACTOR TO CUT, PATCH, AND PAINT EXISTING WALL OR CEILING IF NECESSARY TO INSTALL NEW DEVICE.
6. PROVIDE AND INSTALL 1" CONDUIT WITH PULLSTRING FROM J-BOX ABOVE DOOR TO NEAREST CABLE TRAY. COORDINATE WITH OWNER'S SECURITY CONTRACTOR FOR EXACT LOCATION AND REQUIREMENTS BEFORE DOING ANY WORK.
7. PROVIDE AND INSTALL SINGLE GANG J-BOX AT 18" A.F.F. FOR DOOR CONTACT WITH 3/4" CONDUIT WITH PULLSTRING TO J-BOX 6" ABOVE DOOR. COORDINATE WITH OWNER'S SECURITY CONTRACTOR FOR EXACT LOCATION AND REQUIREMENTS BEFORE DOING ANY WORK. SEE DETAIL 7/E7.2 ON SHEET E7.2. CONTRACTOR TO CUT, PATCH, AND PAINT EXISTING WALL OR CEILING IF NECESSARY TO INSTALL NEW DEVICE.
8. PROVIDE AND INSTALL 4"X4"X2 1/8" DEEP TWO GANG J-BOX WITH COVER PLATE FOR CCTV CAMERA. INSTALL J-BOX ON WALL AT 10' A.F.F. COORDINATE WITH OWNER SECURITY CONTRACTOR FOR EXACT LOCATION AND REQUIREMENTS BEFORE DOING ANY WORK. CONTRACTOR TO CUT, PATCH, AND PAINT EXISTING WALL OR CEILING IF NECESSARY TO INSTALL NEW DEVICE.
9. PROVIDE AND INSTALL 4"X4"X2 1/8" DEEP J-BOX WITH COVER PLATE FOR CCTV CAMERA. INSTALL J-BOX INSIDE BUILDING. PROVIDE AND INSTALL 1" CONDUIT WITH PULLSTRING TO PENETRATE THROUGH EXTERIOR WALL. PROVIDE AND INSTALL 1" CONDUIT WITH PULLSTRING FROM J-BOX TO NEAREST ACCESSIBLE CABLE TRAY. SEE DETAIL 8/E7.2 ON SHEET E7.2. COORDINATE WITH OWNER SECURITY CONTRACTOR FOR EXACT LOCATION AND REQUIREMENTS BEFORE DOING ANY WORK. CONTRACTOR TO CUT, PATCH, AND PAINT EXISTING WALL OR CEILING IF NECESSARY TO INSTALL NEW DEVICE.
10. PROVIDE AND INSTALL SINGLE GANG DEEP J-BOX WITH PLASTER RING AT 48" A.F.F. FOR CARD READER CONNECTIONS. PROVIDE AND INSTALL 3/4" CONDUIT WITH PULLSTRING TO J-BOX 6" ABOVE DOOR. COORDINATE WITH OWNER'S SECURITY CONTRACTOR FOR EXACT LOCATION AND REQUIREMENTS BEFORE DOING ANY WORK. SEE DETAIL 3/E7.2 ON SHEET E7.2. CONTRACTOR TO CUT, PATCH, AND PAINT EXISTING WALL OR CEILING IF NECESSARY TO INSTALL NEW DEVICE.
11. PROVIDE AND INSTALL 4"X4"X2 1/8" DEEP TWO GANG J-BOX WITH COVER PLATE FOR CCTV CAMERA. INSTALL J-BOX ABOVE CEILING AT CAMERA LOCATION. SEE DETAIL 9/E7.2 ON SHEET E7.2. COORDINATE WITH OWNER'S SECURITY CONTRACTOR FOR EXACT LOCATION AND REQUIREMENTS BEFORE DOING ANY WORK.
12. PROVIDE AND INSTALL SINGLE GANG DEEP J-BOX WITH PLASTER RING AT 48" A.F.F. FOR CARD READER CONNECTIONS. PROVIDE AND INSTALL 3/4" CONDUIT WITH PULLSTRING TO J-BOX 6" ABOVE DOOR. COORDINATE WITH OWNER'S SECURITY CONTRACTOR FOR EXACT LOCATION AND REQUIREMENTS BEFORE DOING ANY WORK. SEE DETAIL 5/E7.2 ON SHEET E7.2. CONTRACTOR TO CUT, PATCH, AND PAINT EXISTING WALL OR CEILING IF NECESSARY TO INSTALL NEW DEVICE.
13. PROVIDE AND INSTALL SINGLE GANG DEEP J-BOX WITH PLASTER RING AT 48" A.F.F. FOR CARD READER CONNECTIONS. PROVIDE AND INSTALL 3/4" CONDUIT WITH PULLSTRING TO J-BOX 6" ABOVE DOOR. COORDINATE WITH OWNER'S SECURITY CONTRACTOR FOR EXACT LOCATION AND REQUIREMENTS BEFORE DOING ANY WORK. SEE DETAIL 7/E7.2 ON SHEET E7.2. CONTRACTOR TO CUT, PATCH, AND PAINT EXISTING WALL OR CEILING IF NECESSARY TO INSTALL NEW DEVICE.
14. PROVIDE AND INSTALL J-BOX ABOVE JOIST LEVEL FOR WIFI CONNECTIONS. COORDINATE WITH OWNER FOR EXACT LOCATION AND REQUIREMENTS.
15. PROVIDE AND INSTALL J-BOX ABOVE SUSPENDED CEILING FOR WIFI CONNECTIONS. COORDINATE WITH OWNER FOR EXACT LOCATION AND REQUIREMENTS.
16. CONTRACTOR TO INSTALL COPPER GROUND BAR AT EACH I.T. ROOM. GROUND BAR MUST BE GROUNDED WITH 1-#6 COPPER CONDUCTOR TO GROUND BAR IN NEAREST PANEL. SEE DETAIL 8/E7.1 ON SHEET E7.1
17. NOT USED.
18. NOT USED.
19. PROVIDE AND INSTALL 4" CONDUIT WITH BUSHINGS AND PULLSTRING FROM TELECOMMUNICATIONS/I.T. ROOM119 TO EQUIPMENT RACK ROOM 122. STUBB-UP CONDUIT 2" A.F.F. COORDINATE WITH OWNER FOR EXACT LOCATION AND REQUIREMENTS BEFORE DOING ANY WORK.
20. PROVIDE AND INSTALL 4" CONDUIT WITH BUSHINGS AND PULLSTRING FROM EQUIPMENT RACK ROOM 122 TO PROGRAMMABLE LOGIC ROOM 123A. STUBB-DOWN CONDUIT 2' BELOW CEILING. COORDINATE WITH OWNER FOR EXACT LOCATION AND REQUIREMENTS BEFORE DOING ANY WORK.
21. PROVIDE AND INSTALL 4" CONDUIT WITH BUSHINGS AND PULLSTRING FROM PROGRAMMABLE LOGIC ROOM 123A TO TELECOMMUNICATIONS/I.T. ROOM 123G. STUBB-DOWN CONDUIT 2' DOWN ON WALL. COORDINATE WITH OWNER FOR EXACT LOCATION AND REQUIREMENTS BEFORE DOING ANY WORK.
22. INSTALL 3/4"X4'X8' A-C GRADE FIRE RETARDANT TREATED PLYWOOD BOARD ON THREE WALLS FROM CORNER TO CORNER. WITH 2" CONDUIT WITH PULLSTRING FROM TELEPHONE BOARD TO LOCAL TELEPHONE SERVICE POINT. COORDINATE WITH OWNER BEFORE DOING ANY WORK.
23. PROVIDE AND INSTALL 1" CONDUIT WITH PULLSTRING FROM PDP CONTROL BOX TO NEAREST ACCESSIBLE CABLE TRAY. COORDINATE WITH OWNER'S SECURITY CONTRACTOR FOR EXACT LOCATION AND REQUIREMENTS BEFORE DOING ANY WORK.

GENERAL NOTES: (THIS SHEET ONLY)

19. CONTRACTOR MUST FOLLOW THE "CITY OF EL PASO TELECOMMUNICATIONS DESIGN AND CONTRUCTIONS STANDARDS REVISION DATE MAY 23RD 2016" FOR EXACT REQUIREMENTS BEFORE DOING ANY WORK.

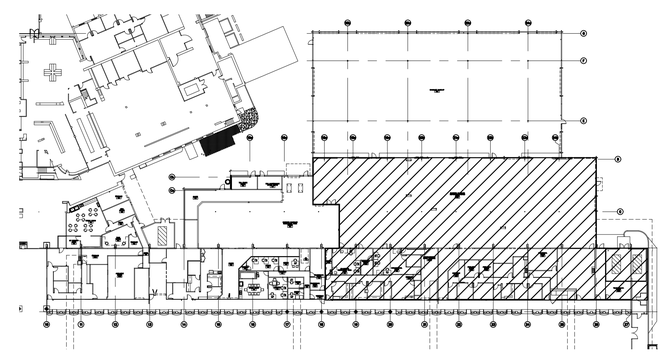

KEY PLAN

SCALE : N.T.S.

ALPHA ENGINEERING, INC.
ENGINEERING CONSULTANTS
1818 E. RIO GRANDE • EL PASO, TEXAS 79902
TEL. (915) 838-9900• FAX. (915) 838-9909
REGISTRATION # F005236

REFERENCES -- BENCHMARK

DATE	REVISIONS	BY

CONSULTANT'S NAME
mijares mora
ARCHITECTS INC.
EL PASO, TEXAS 79912
TEL 915-542-1984
FAX 542-7984

ENGINEER'S SEAL

SCALE

DATE	MAY 2016
DESIGN BY	MM/RMP
DRAWN BY	S.D.
CHKD. BY	S.D.
APPD. BY	J.L.M.
JOB NO.	1603

PROJECT NAME

EL PASO INTERNATIONAL AIRPORT
CHECKED BAGGAGE INSPECTION SYSTEM

6701 CONVAIR RD. EL PASO, TEXAS

EL PASO INTERNATIONAL AIRPORT

CITY OF EL PASO

SHEET TITLE

SPECIAL SYSTEM ENLARGED PLAN

E5.1

FILE NO. 238512

SHEET 13 OF 21

SPECIAL SYSTEMS LEGEND

(ALL DIGITAL DEVICES MUST BE ADDRESSABLE)

- 15 STROBE, NUMBER DENOTES 'cd' RATING
- 15 HORN/STROBE, NUMBER DENOTES 'cd' RATING
- PULL STATION WITH STOPPER
- S SMOKE DETECTOR
- D DUCT SMOKE DETECTOR WITH REMOTE TEST SWITCH
- DATA OUTLET, 4" SQ. DEEP BOX WITH SINGLE DEVICE PLASTER RING. INSTALL 1" CONDUIT WITH PULLSTRING AND BUSHINGS FROM BOX TO NEAREST CABLE TRAY.
- FARA FIRE ALARM REMOTE ANNUNCIATOR
- FACP FIRE ALARM CONTROL PANEL WITH DIGITAL NOTIFIER
- TS DUCT SMOKE DETECTOR TEST SWITCH.
- CCTV CAMERA (PROVIDED AND INSTALLED BY OTHERS). PROVIDE AND INSTALL 4"X4"X2 1/8" J-BOX. SEE DETAIL 7/E7.1, 8/E7.2, 9/E7.3.
- EXT EXTERIOR CCTV CAMERA (PROVIDED AND INSTALLED BY OTHERS). PROVIDE AND INSTALL 4"X4"X2 1/8" J-BOX. SEE DETAIL 8/E7.2
- CR CARD READER (PROVIDED AND INSTALLED BY OTHERS). PROVIDE AND INSTALL 4"X4" J-BOX. SEE DETAILS 1/E7.2, 2/E7.2, 3/E7.2, 4/E7.2, SEE DETAILS 5/E7.2, 6/E7.2, 7/E7.2, 4/E7.2,

SPECIAL SYSTEMS NOTES

A. FIRE ALARM INSTALLER TO INSTALL SYSTEM TO MEET ALL NATIONAL AND LOCAL FIRE CODES. INSTALLER TO SUBMIT TO ARCHITECT "AS BUILT" DRAWINGS.

B. FIRE ALARM INSTALLER TO COORDINATE AND CONNECT SMOKE DETECTION SYSTEM TO A/C DUCT SYSTEM. PROVIDE AND INSTALL DUCT SMOKE DETECTORS ON SUPPLY AND RETURN SIDE OF EXISTING AIR HANDLERS ON ROOF. PROVIDE AND INSTALL DUCT SMOKE DETECTORS ON SUPPLY AND RETURN SIDE FOR NEW AIR HANDLER AHU-1.

C. NEW F.A. ALARM DEVICES MUST BE COMPATIBLE WITH THE EXISTING NOTIFIER 5000 PANEL.

D. F.A. INSTALLER MUST BE CERTIFIED BY THE STATE AND SUBMIT ALL REQUIRED PLANS AND DRAWINGS, F.A. SYSTEM CALCULATIONS AND ALL APPLICABLE SUBMITTALS TO THE GOVERNING AUTHORITIES TO OBTAIN A PERMIT.

E. THE F.A. INSTALLER MUST BID ON A COMPLETE F.A. SYSTEM THAT CONFORMS TO ALL APPLICABLE CODES.

F. FIRE ALARM PANEL MUST HAVE PHONE DIALER AND BE CONNECTED TO PHONE SYSTEM.

G. F.A. INSTALLER MUST VISIT SITE TO BECOME FAMILIAR WITH EXISTING CONDITIONS BEFORE BIDDING ON THIS PROJECT.

H. ALL FIRE ALARM WIRING MUST BE PLENUM RATED. FIRE ALARM WIRING MAY BE RUN IN EXISTING CABLE TRAY ABOVE CEILING.

I. CONTRACTOR MUST VERIFY EXACT ROUGH-IN REQUIREMENTS AND LOCATIONS OF ALL CCTV, INTRUSION, AND ACCESS CONTROL DEVICES WITH OWNER'S SECURITY CONTRACTOR BEFORE DOING ANY WORK.

J. CONTRACTOR SHALL CUT, PATCH, AND PAINT EXISTING WALLS WHERE NECESSARY TO INSTALL NEW DEVICES ON EXISTING WALLS. EXISTING WALLS MUST BE PATCHED AND PAINTED TO ORIGINAL SPECIFICATIONS. NO EXPOSED CONDUIT WILL BE ALLOWED, UNLESS APPROVED BY ENGINEER. IF EXISTING CONDITIONS DO NOT ALLOW FOR CUTTING AND PATCHING CONTRACTOR SHALL NOTIFY ENGINEER IN A TIMELY MANNER.

K. ALL CONDUITS MUST BE PROVIDED WITH BUSHINGS.

L. CONTRACTOR MUST VERIFY EXACT ROUGH-IN REQUIREMENTS AND LOCATIONS OF ALL NEW DATA/TEL. OUTLETS WITH CITY OF EL PASO I.T. DEPARTMENT BEFORE DOING ANY WORK.

M. CONTRACTOR MUST FOLLOW THE "CITY OF EL PASO TELECOMMUNICATIONS DESIGN AND CONTRUCTIONS STANDARDS REVISION DATE MAY 23RD 2016" FOR EXACT REQUIREMENTS BEFORE DOING ANY WORK.

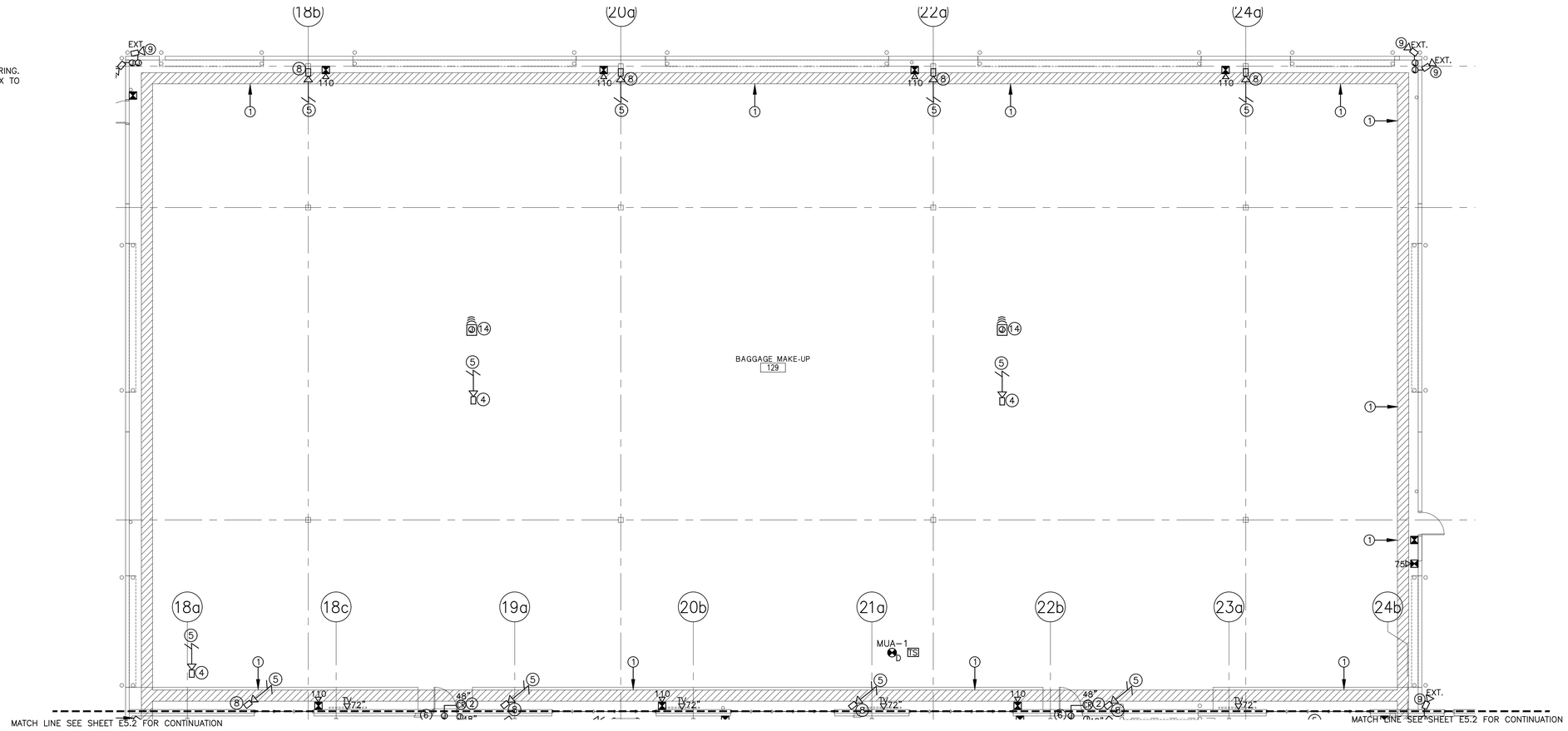

1 SPECIAL SYSTEM ENLARGED FLOOR PLAN

SCALE 1/8" = 1'-0"

PLAN NORTH

KEYED NOTES:

1. CONTRACTOR TO PROVIDE AND INSTALL 12" WIDE, 4" HIGH, WIRE-MESH CABLE TRAY. CABLE TRAY TO BE LEGRAND CABLOFIL CF105/300 OR EQUAL APPROVED BY OWNER. INSTALL WALL BRACKET SUPPORTS OR HANGING SUPPORTS AS NEEDED. EXACT LOCATION OF CABLE TRAY MUST BE COORDINATED WITH ARCHITECTURAL, MECHANICAL, STRUCTURAL PLANS, SECURITY PLANS, AND WITH OWNER BEFORE ROUGH-IN. CABLE TRAY TO BE LABELED "COEP DOITS". CABLE TRAY MUST HAVE A #6 BARE COPPER GROUND ALONG ITS ENTIRE LENGTH. THIS BARE COPPER
2. GROUND TO BE ATTACHED TO THE GROUND BAR IN EVERY I.T. OR TELECOMMUNICATIONS ROOM.

   PROVIDE AND INSTALL DOOR CARD READER AT 48" A.F.F.
3. CONTRACTOR TO CUT, PATCH, AND PAINT EXISTING WALL OR CEILING IF NECESSARY TO INSTALL NEW DEVICE.
4. NOT USED.

   PROVIDE AND INSTALL 4"X4"X2 1/8" DEEP TWO GANG J-BOX WITH COVER PLATE FOR CCTV CAMERA. INSTALL J-BOX ON THREADED ROD AT CAMERA LOCATION. SEE DETAIL 7/E7.1 ON SHEET E7.1. COORDINATE WITH OWNER'S SECURITY CONTRACTOR FOR EXACT LOCATION AND REQUIREMENTS BEFORE DOING ANY WORK. PROVIDE AND INSTALL 1" CONDUIT WITH PULLSTRING NEW CABLE TRAY.
5. CONTRACTOR TO CUT, PATCH, AND PAINT EXISTING WALL OR CEILING IF NECESSARY TO INSTALL NEW DEVICE.

   PROVIDE AND INSTALL 1" CONDUIT WITH PULLSTRING FROM CAMERA J-BOX TO NEW CABLE TRAY. COORDINATE WITH OWNER'S SECURITY CONTRACTOR FOR EXACT LOCATION AND REQUIREMENTS BEFORE DOING ANY WORK. CONTRACTOR TO
6. CUT, PATCH, AND PAINT EXISTING WALL OR CEILING IF NECESSARY TO INSTALL NEW DEVICE.

   NOT USED.
7. NOT USED.
8. PROVIDE AND INSTALL 4"X4"X2 1/8" DEEP TWO GANG J-BOX WITH COVER PLATE FOR CCTV CAMERA. INSTALL J-BOX ON WALL AT 10' A.F.F. COORDINATE WITH OWNER SECURITY CONTRACTOR FOR EXACT LOCATION AND REQUIREMENTS BEFORE DOING ANY WORK. CONTRACTOR TO CUT, PATCH, AND PAINT EXISTING WALL OR CEILING IF NECESSARY TO INSTALL NEW DEVICE.
9. PROVIDE AND INSTALL 4"X4"X2 1/8" DEEP J-BOX WITH COVER PLATE FOR CCTV CAMERA. INSTALL J-BOX INSIDE BUILDING. PROVIDE AND INSTALL 3/4" CONDUIT WITH PULLSTRING TO PENETRATE THROUGH EXTERIOR WALL. PROVIDE AND INSTALL 1" CONDUIT WITH PULLSTRING FROM J-BOX TO NEAREST ACCESSIBLE CABLE TRAY. SEE DETAIL 8/E7.2 ON SHEET E7.2. COORDINATE WITH OWNER SECURITY CONTRACTOR FOR EXACT LOCATION AND REQUIREMENTS BEFORE DOING ANY WORK. CONTRACTOR TO CUT, PATCH, AND PAINT EXISTING WALL OR CEILING IF NECESSARY TO INSTALL NEW DEVICE.
10. NOT USED.
11. NOT USED.
12. NOT USED.
13. NOT USED.
14. PROVIDE AND INSTALL J-BOX ABOVE JOIST LEVEL FOR WIFI CONNECTIONS. COORDINATE WITH OWNER FOR EXACT LOCATION AND REQUIREMENTS.
15. NOT USED.
16. NOT USED.
17. NOT USED.
18. NOT USED.
19. PROVIDE AND INSTALL J-BOX ABOVE JOIST LEVEL FOR WIFI CONNECTIONS. COORDINATE WITH OWNER FOR EXACT LOCATION AND REQUIREMENTS.
20. NOT USED.
21. NOT USED.
22. INSTALL 3/4"X4'X8' A-C GRADE FIRE RETARDENT TREATED PLYWOOD BOARD ON THREE WALLS FROM CORNER TO CORNER. WITH 2" CONDUIT WITH PULLSTRING FROM TELEPHONE BOARD TO LOCAL TELEPHONE SERVICE POINT. COORDINATE WITH OWNER BEFORE DOING ANY WORK.

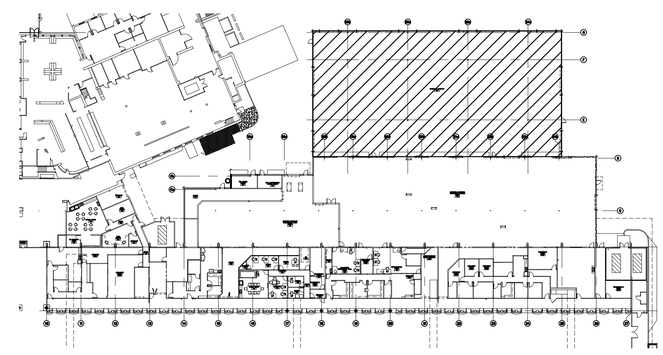

KEY PLAN

SCALE : N.T.S.

ALPHA ENGINEERING, INC.
ENGINEERING CONSULTANTS
1818 E. RIO GRANDE • EL PASO, TEXAS 79902
TEL. (915) 838-9900• FAX. (915) 838-9909
REGISTRATION # F005236

REFERENCES -- BENCHMARK

DATE	REVISIONS	BY

CONSULTANT'S NAME

mijares mora
ARCHITECTS INC.
EL PASO, TEXAS 79912
111 N. FESTIVAL
TEL 915-542-1991
FAX 542-7984

ENGINEER'S SEAL

SCALE

DATE	MAY 2016
DESIGN BY	MM/BNP
DRAWN BY	S.D.
CHKD. BY	S.D.
APPD. BY	J.L.M.
JOB NO.	1603

PROJECT NAME

EL PASO INTERNATIONAL AIRPORT
CHECKED BAGGAGE INSPECTION SYSTEM

6701 CONVAIR RD. EL PASO, TEXAS

CITY OF EL PASO

SHEET TITLE

SPECIAL SYSTEM ENLARGED PLAN

E5.2

FILE NO. 238512

SHEET 1 OF 21

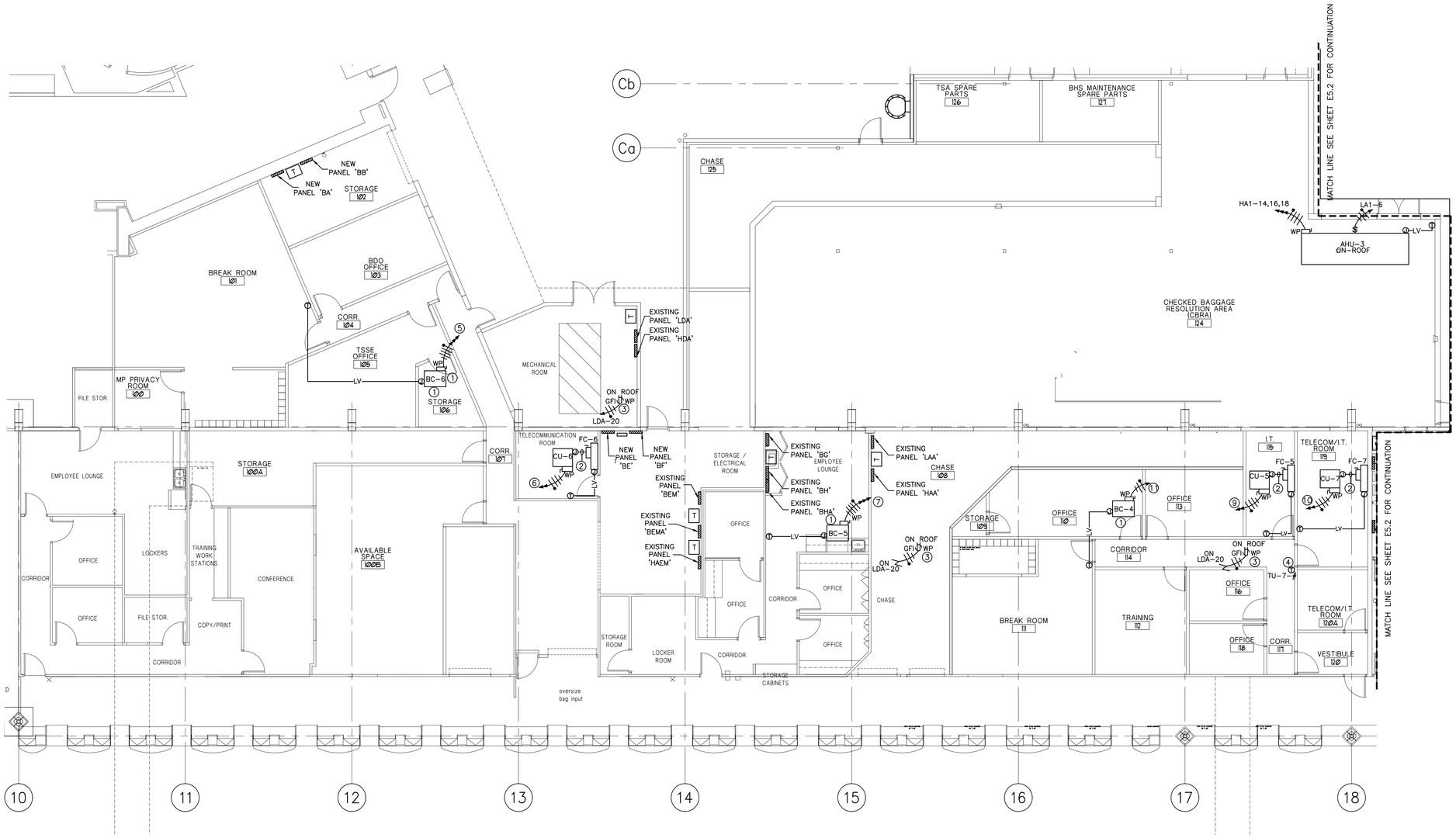

1 HVAC POWER PLAN

SCALE 1/8" = 1'-0"

PLAN NORTH

KEYED NOTES:

1. COORDINATE WITH MECHANICAL PLANS FOR EXACT LOCATION AND INTERCONNECTION REQUIREMENTS OF BLOWER COIL BEFORE DOING ANY WORK.
2. PROVIDE AND INSTALL 4–#10 CU. CONDRS. FOR POWER AND CONTROL WIRING IN 1/2" CONDUIT. VERIFY EXACT INTERCONNECTION REQUIREMENTS WITH MECHANICAL PLANS BEFORE DOING ANY WORK.
3. CONNECT ALL ROOF OUTLETS TO THE SAME CIRCUIT. ASSURE THAT A ROOF MOUNTED RECEPTACLE IS WITHIN 25' OF ANY ELECTRICAL EQUIPMENT ON ROOF.
4. CONTRACTOR TO INSTALL NEW THERMOSTAT TO CONTROL EXISTNG UNIT AS NOTED. COORDINATE WITH MECHANICAL PLANS FOR EXACT LOCATION AND REQUIREMENTS BEFORE DOING ANY WORK.
5. HOME RUN CIRCUIT TO EXISTING AVAILABLE 20A/3P SPARE CB ON SPACES 19,21, AND 23 IN EXISTING PANELBOARD 'HDA' LOCATED IN MECHANICAL ROOM.
6. HOME RUN CIRCUIT TO EXITING PANELBOARD 'BEM' LOCATED IN EXISTING ELECTRICAL ROOM. CONTRACTOR TO REMOVE EXISTING 20A/1P CB IN SPACES 22 AND 24 AND PROVIDE AND INSTALL NEW 30A/2P CB ON THESE SPACES FOR POWER TO UNIT. CONTRACTOR TO PROVIDE AND INSTALL 3/4" CONDUIT WITH 3–#10 CU CONDUCTORS AND 1–#10 CU GND.
7. HOME RUN CIRCUIT TO EXISTING PANELBOARD 'HAA'. PROVIDE AND INSTALL NEW 15A/3P CB ON SPACES 14,16 & 18 FOR POWER TO UNIT.
8. HOME RUN CIRCUIT TO EXISTING PANERLBOARD 'LDA' LOCATED MECHANICAL ROOM. PROVIDE AND INSTALL NEW 20A/1P CB IN SPACE 20 FOR POWER TO ROOF OUTLETS.
9. HOME RUN CIRCUIT TO EXISTING PANELBOARD 'BEM' LOCATED IN ELECTRICAL ROOM. CONTRACTOR TO REMOVE EXISTING 20A/1P CB ON SPACES 26 AND 28 AND PROVIDE AND INSTALL NEW 25A/2P CB FOR POWER TO UNIT.
10. HOME RUN CIRCUIT TO EXITING PANELBOARD 'BEM' LOCATED IN EXISTING ELECTRICAL ROOM. CONTRACTOR TO REMOVE EXISTING 20A/1P CB IN SPACES 30 AND 32 AND PROVIDE AND INSTALL NEW 30A/2P CB ON THESE SPACES FOR POWER TO UNIT. CONTRACTOR TO PROVIDE AND INSTALL 3/4" CONDUIT WITH 3–#10 CU CONDUCTORS AND 1–#10 CU GND.
11. HOME RUN CIRCUIT TO EXISTING AVAILABLE 20A/1P SPARE CB ON SPACE 1 IN EXISTING PANELBOARD 'LAA' LOCATED IN NEW CHASE 108.

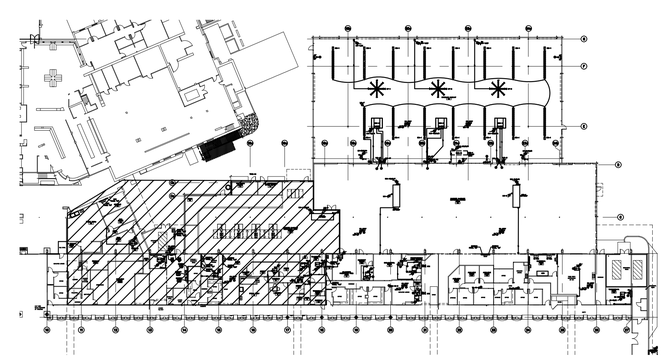

KEY PLAN

SCALE : N.T.S.

ALPHA ENGINEERING, INC.
ENGINEERING CONSULTANTS
1818 E. RIO GRANDE • EL PASO, TEXAS 79902
TEL. (915) 838–9900• FAX. (915) 838–9909
REGISTRATION # F005236

REFERENCES – BENCHMARK

DATE	REVISIONS	BY

CONSULTANT'S NAME

mijares mora
ARCHITECTS INC.
111 N. EXCHANGE
EL PASO, TEXAS 79912
TEL 915-542-1991

ENGINEER'S SEAL

SCALE

DATE MAY 2016
DESIGN BY MM/BP
DRAWN BY S.D.
CHKD. BY JLM
APPD. BY JLM
JOB NO. 1603

PROJECT NAME

EL PASO INTERNATIONAL AIRPORT
CHECKED BAGGAGE INSPECTION SYSTEM

6701 CONVAIR RD. EL PASO, TEXAS

EL PASO INTERNATIONAL

CITY OF EL PASO

SHEET TITLE

HVAC POWER ENLARGED FLOOR PLAN

E6.0

FILE NO. 238512

SHEET 15 OF 21

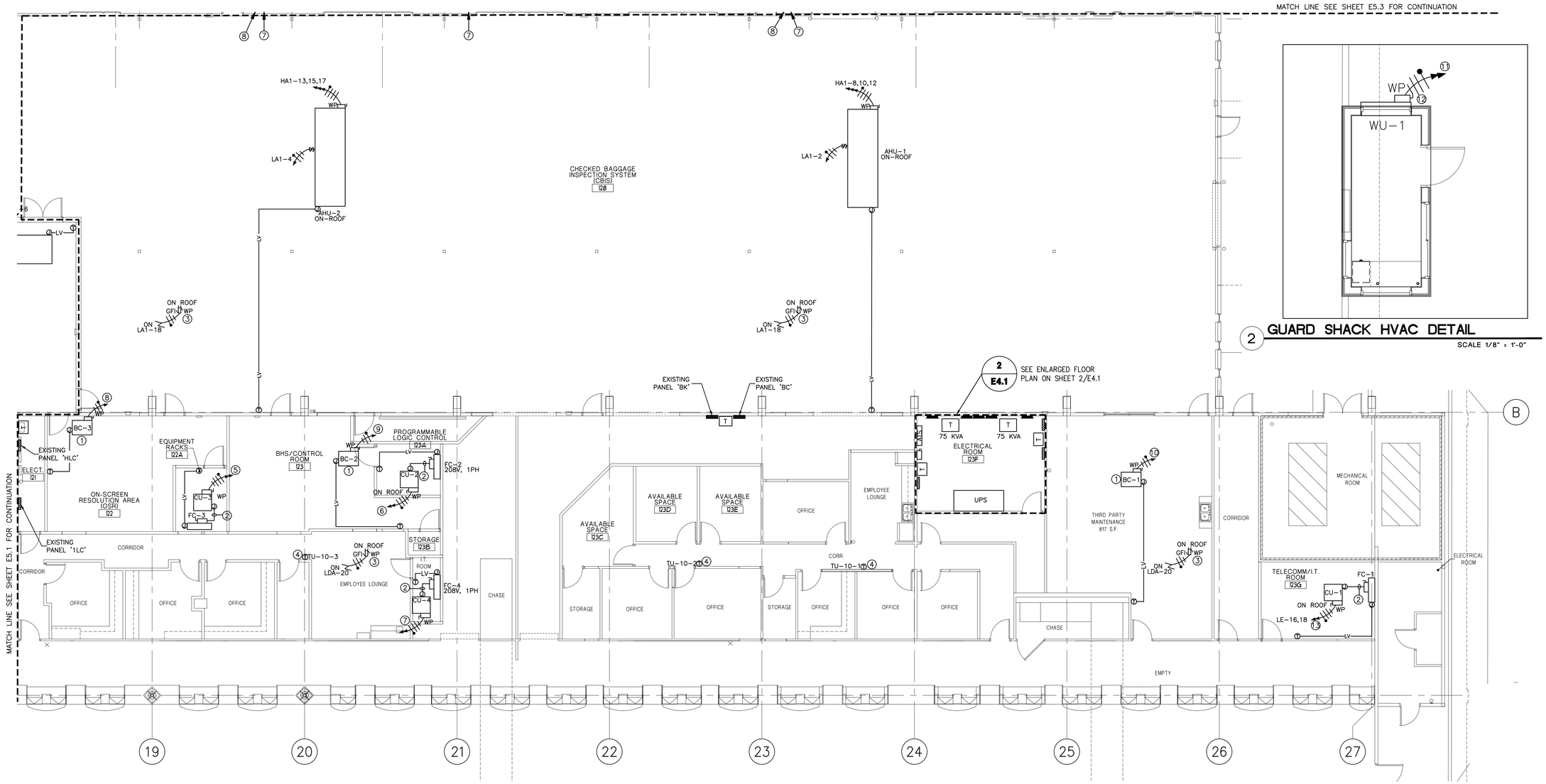

1 HVAC POWER PLAN

SCALE 1/8" = 1'-0"

2 GUARD SHACK HVAC DETAIL

SCALE 1/8" = 1'-0"

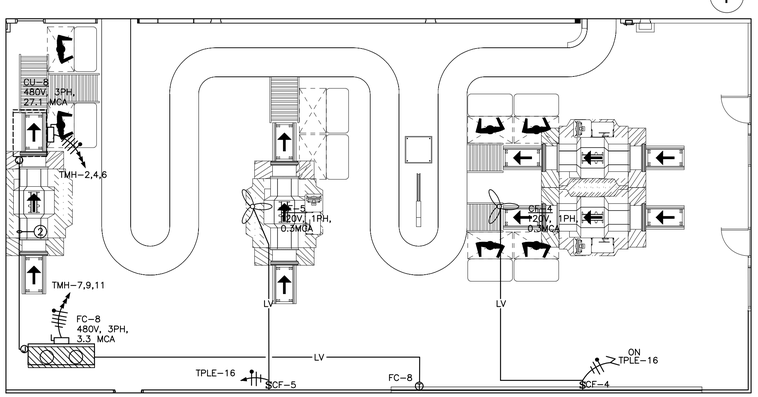

3 TEMPORARY HVAC POWER PLAN

SCALE 1/8" = 1'-0"

KEYED NOTES:

1. COORDINATE WITH MECHANICAL PLANS FOR EXACT LOCATION AND INTERCONNECTION REQUIREMENTS OF BLOWER COIL BEFORE DOING ANY WORK.
2. PROVIDE AND INSTALL 4–#10 CU. CONDRS. FOR POWER AND CONTROL WIRING IN 1/2" CONDUIT. VERIFY EXACT INTERCONNECTION REQUIREMENTS WITH MECHANICAL PLANS BEFORE DOING ANY WORK.
3. CONNECT ALL ROOF OUTLETS TO THE SAME CIRCUIT. ASSURE THAT A ROOF MOUNTED RECEPTACLE IS WITHIN 25' OF ANY ELECTRICAL EQUIPMENT ON ROOF.
4. CONTRACTOR TO INSTALL NEW THERMOSTAT TO CONTROL EXISTNG UNIT AS NOTED. COORDINATE WITH MECHANICAL PLANS FOR EXACT LOCATION AND REQUIREMENTS BEFORE DOING ANY WORK.
5. HOME RUN CIRCUIT TO EXITING PANELBOARD 'BEM' LOCATED IN EXISTING ELECTRICAL ROOM. CONTRACTOR TO REMOVE EXISTING 20A/1P CB IN SPACES 34 AND 36 AND PROVIDE AND INSTALL NEW 30A/2P CB ON THESE SPACES FOR POWER TO UNIT. CONTRACTOR TO PROVIDE AND INSTALL 3/4" CONDUIT WITH 3–#10 CU CONDUCTORS AND 1–#10 CU GND.
6. HOME RUN CIRCUIT TO EXITING PANELBOARD 'BEM' LOCATED IN EXISTING ELECTRICAL ROOM. CONTRACTOR TO REMOVE EXISTING 20A/1P CB IN SPACES 38 AND 40 AND PROVIDE AND INSTALL NEW 30A/2P CB ON THESE SPACES FOR POWER TO UNIT. CONTRACTOR TO PROVIDE AND INSTALL 3/4" CONDUIT WITH 3–#10 CU CONDUCTORS AND 1–#10 CU GND.
7. HOME RUN CIRCUIT TO EXITING PANELBOARD 'BEM' LOCATED IN EXISTING ELECTRICAL ROOM. CONTRACTOR TO REMOVE EXISTING 20A/1P CB IN SPACES 17 AND 19 AND PROVIDE AND INSTALL NEW 25A/2P CB ON THESE SPACES FOR POWER TO UNIT. CONTRACTOR TO PROVIDE AND INSTALL 3/4" CONDUIT WITH 3–#10 CU CONDUCTORS AND 1–#10 CU GND.
8. HOME RUN CIRCUIT TO EXISTING PANERLBOARD '1LC' LOCATED ELECTRICAL ROOM 121. PROVIDE AND INSTALL NEW 20A/1P CB IN SPACE 2 FOR POWER TO UNIT.
9. HOME RUN CIRCUIT TO EXISTING PANERLBOARD '1LC' LOCATED ELECTRICAL ROOM 121. PROVIDE AND INSTALL NEW 20A/1P CB IN SPACE 2 FOR POWER TO UNIT.
10. HOME RUN CIRCUIT TO EXISTING AVAILABLE 20A/1P SPARE CB ON SPACE 16 IN EXISTING PANELBOARD 'LBA1' LOCATED IN ELECTRICAL ROOM.
11. HOME RUN CIRCUIT TO EXISTING AVAILABLE 20A/2P SPARE CB ON SPACE 34 AND 36 IN EXISTING PANELBOARD 'LBA2' LOCATED IN ELECTRICAL ROOM.
12. CONTRACTOR TO PROVIDE AND INSTALL PACKAGED TERMINAL AIR CONDITIONER. COORDINATE WITH MECHANICAL PLANS FOR EXACT LOCATION AND INTERCONNECTION REQUIREMENTS OF BLOWER COIL BEFORE DOING ANY WORK.
13. HOME RUN CIRCUIT IN 3/4" CONDUIT AND PROVIDE AND INSTALL 3–#10 CU CONDUCTORS AND 1–#10 CU GND FOR POWER TO UNIT.

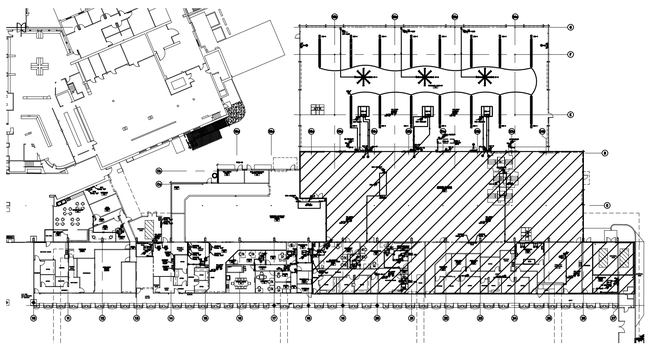

KEY PLAN

SCALE : N.T.S.

ALPHA ENGINEERING, INC.
ENGINEERING CONSULTANTS
1818 E. RIO GRANDE • EL PASO, TEXAS 79902
TEL. (915) 838–9900• FAX. (915) 838–9909
REGISTRATION # F005236

REFERENCES – BENCHMARK

DATE	REVISIONS	BY

CONSULTANT'S NAME
mijares mora ARCHITECTS INC.
111 N. EXCHANGE
EL PASO, TEXAS 79912
TEL. 915-542-1991
FAX. 542-1994

ENGINEER'S SEAL

SCALE

DATE	MAY 2016
DESIGN BY	MMV/BRP
DRAWN BY	S.D.
CHKD. BY	S.D.
APPD. BY	J.L.M.
JOB NO.	1603

PROJECT NAME

EL PASO INTERNATIONAL AIRPORT
CHECKED BAGGAGE INSPECTION SYSTEM
6701 CONVAIR RD. EL PASO, TEXAS

CITY OF EL PASO

SHEET TITLE

HVAC POWER ENLARGED FLOOR PLAN

E6.1

FILE NO. 238512

SHEET 1 OF 21

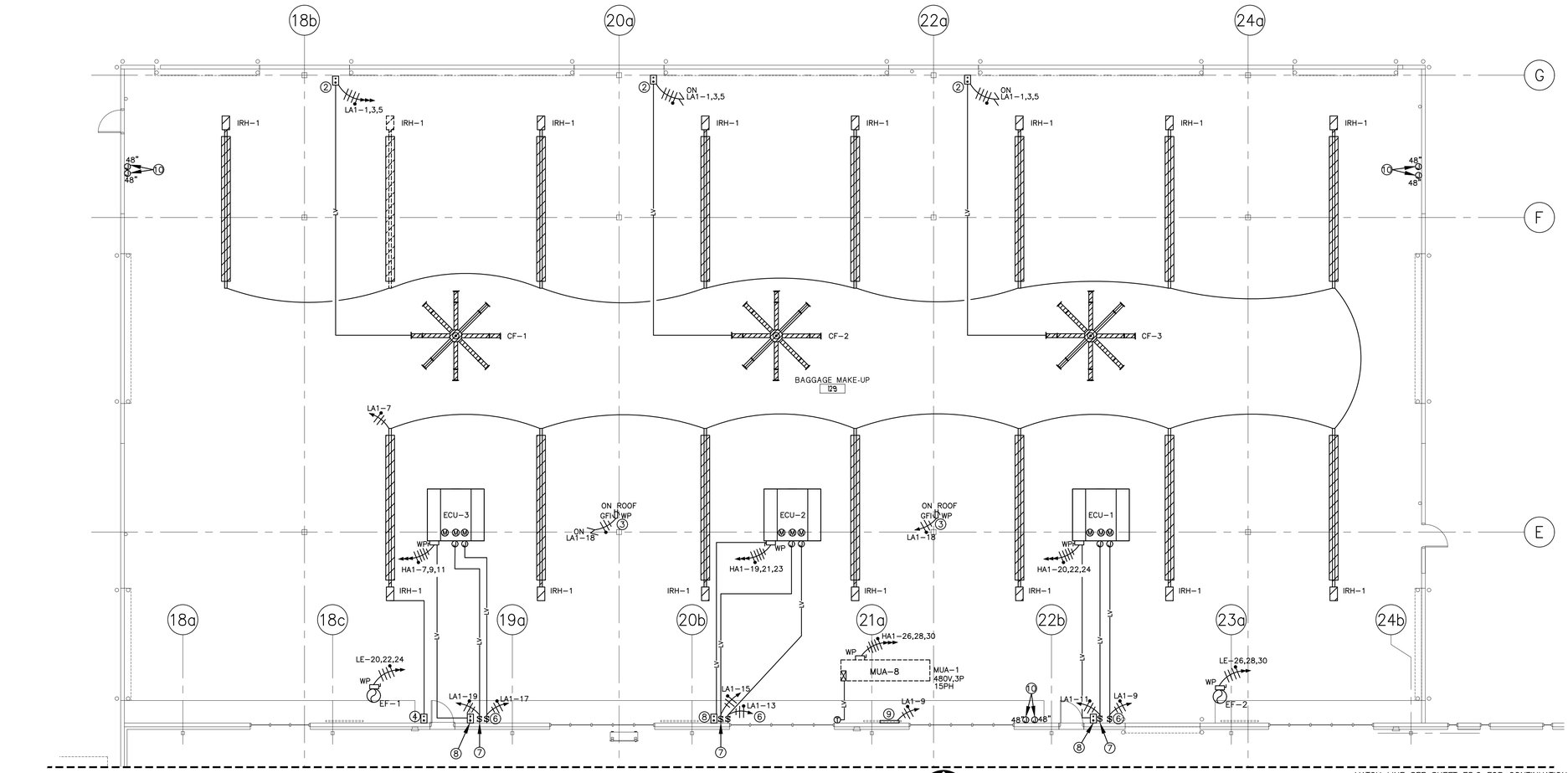

MATCH LINE SEE SHEET E5.2 FOR CONTINUATION

MATCH LINE SEE SHEET E5.2 FOR CONTINUATION

1 HVAC POWER PLAN

SCALE 1/8" = 1'-0"

PLAN NORTH

KEYED NOTES:

1. NOT USED.
2. CONTROLLER SUPPLIED BY MECHANICAL CONTRACTOR AND INSTALLED BY ELECTRICAL CONTRACTOR.
3. CONNECT ALL ROOF OUTLETS TO THE SAME CIRCUIT. ASSURE THAT A ROOF MOUNTED RECEPTACLE IS WITHIN 25' OF ANY ELECTRICAL EQUIPMENT ON ROOF.
4. CONTRACTOR TO PROVIDE AND INSTALL SINGLE STAGE GAS CONTROL WITH DIRECT SPARK IGNITION WITH 100% SAFETY SHUTOFF AT 115V/24V FOR INFRARED HEATERS. COORDINATE WITH MECHANICAL PLANS FOR EXACT LOCATION AND INTERCONNECTION REQUIREMENTS BEFORE DOING ANY WORK.
5. NOT USED.
6. CONTRACTOR TO PROVIDE AND INSTALL SWITCH FOR CONTROL OF (2) 115/1 AUTOMATIC DRAIN PUMPS INSIDE EVAPORATIVE COOLER. COORDINATE WITH MECHANICAL PLANS FOR EXACT LOCATION AND INTERCONNECTION REQUIREMENTS BEFORE DOING ANY WORK.
7. CONTRACTOR TO PROVIDE AND INSTALL SWITCH FOR CONTROL OF (2) 115/1 PUMPS INSIDE EVAPORATIVE COOLER. COORDINATE WITH MECHANICAL PLANS FOR EXACT LOCATION AND INTERCONNECTION REQUIREMENTS BEFORE DOING ANY WORK.
8. CONTRACTOR TO PROVIDE AND INSTALL EVAPORATIVE COOLER CONTROL. COORDINATE WITH MECHANICAL PLANS FOR EXACT LOCATION AND INTERCONNECTION REQUIREMENTS BEFORE DOING ANY WORK.
9. CONTRACTOR TO PROVIDE AND INSTALL MONITOR/CONTROLLER FOR CO/NO2 SYSTEM. MONITOR/CONTROLLER, CO/NO2 SENSORS AND BOTH EXHAUST FAN-1 AND EXHAUST FAN-2 SHALL BE INTERCONNECTED. COORDINATE WITH MECHANICAL PLANS FOR EXACT LOCATION AND INTERCONNECTION REQUIREMENTS BEFORE DOING ANY WORK.
10. CONTRACTOR TO PROVIDE AND INSTALL J-BOX MOUNTED AT 48" A.F.F. FOR CARBON MONOXIDE AND NITROGEN DIOXIDE TRANSMITTER. TRANSMITTERS SHOULD BE INTERCONNECTED WITH CO/NO2 CONTROL PANEL AND EXHAUST FANS 1 AND 2. COORDINATE WITH MECHANICAL PLANS FOR EXACT LOCATION AND INTERCONNECTION REQUIREMENTS BEFORE DOING ANY WORK.

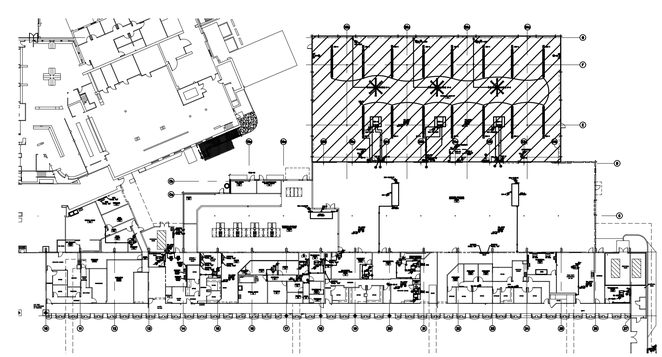

KEY PLAN

SCALE : N.T.S.

ALPHA ENGINEERING, INC.
ENGINEERING CONSULTANTS
1818 E. RIO GRANDE • EL PASO, TEXAS 79902
TEL. (915) 838-9900• FAX. (915) 838-9909
REGISTRATION # F005238

REFERENCES -- BENCHMARK

DATE	REVISIONS	BY

CONSULTANT'S NAME

mijares mora
ARCHITECTS INC.
EL PASO, TEXAS 79912
FAX: 542-7984
TEL: 915-542-1991

ENGINEER'S SEAL

SCALE

DATE	MAY 2016
DESIGN BY	MM/RMP
DRAWN BY	S.D.
CHKD. BY	S.D.
APPD. BY	J.L.M.
JOB NO.	1603

PROJECT NAME

EL PASO INTERNATIONAL AIRPORT
CHECKED BAGGAGE INSPECTION SYSTEM

8701 CONVAIR RD. EL PASO, TEXAS

EL PASO INTERNATIONAL AIRPORT

CITY OF EL PASO

SHEET TITLE

HVAC POWER ENLARGED FLOOR PLAN

E6.2

FILE NO. 238512

SHEET 1 OF 21

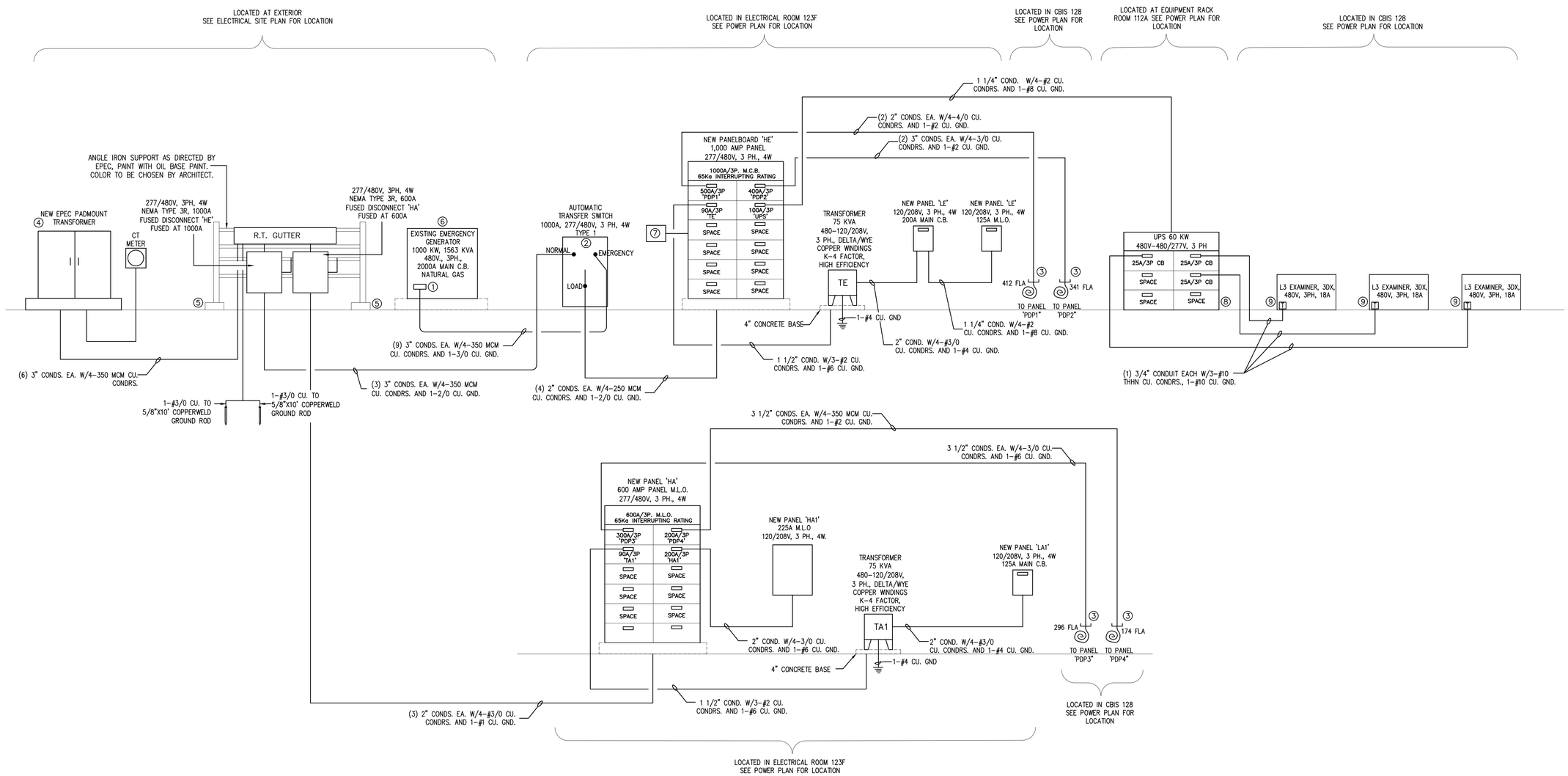

NEW ELECTRICAL SERVICE FOR BAGGAGE CLAIM SYSTEM

KEYED NOTES:

1. STUBB-UP CONDUIT AND MAKE CONNECTIONS TO NEW 1,000A CIRCUIT BREAKER IN EMERGENCY GENERATOR. VERIFY EXACT STUBB-UP LOCATION AND REQUIREMENTS WITH MANUFACTURER BEFORE ROUGH-IN.
2. PROVIDE LAMINATE SIGN ON TRANSFER SWITCH COVER DENOTING THAT THERE IS AN EMERGENCY SHUTOFF AVAILABLE ON THE GENERATOR.
3. CONTRACTOR TO INSTALL CONDUIT DOWN TO 24" AFF, AT THE END OF THE CONDUIT CONTRACTOR TO THEN LEAVE 20' OF WIRE FOR CONNECTION TO CONVEYOR CONTROL PANEL. CONTROL PANEL TO BE INSTALLED BY BAGGAGE HANDLING SYSTEM CONTRACTOR (SEE 'B' SERIES DRAWINGS). COORDINATE WITH CONVEYOR INSTALLER BEFORE DOING ANY WORK. SEE DETAILS 6/E7.1 ON SHEET E7.1.
4. COORDINATE WITH EPEC FOR NEW ELECTRICAL SERVICE AS SOON AS CONTRACT IS LET.
5. CONCRETE BASE FOR ANGLE IRON SUPPORT TO BE 4" HEIGHT ABOVE FINISHED GRADE. CONTRACTOR TO VERIFY WITH EPEC FOR EXACT REQUIREMENTS BEFORE DOING ANY WORK.
6. EXISTING EMERGENCY GENERATOR CONTRACTOR TO COORDINATE CONNECTION WITH EPIA AS SOON AS CONTRACT IS LET. SEE SITE PLAN FOR APPROXIMATE LOCATION.
7. PROVIDE AND INSTALL 2 POLE, ELECTRONIC, 7 DAY PROGRAMMABLE TIMER CONTACTOR FOR CKTS. HE-19 TIMER TO BE ET8415CR OR EQUAL.
8. 60 KW UPS PROVIDED BY OTHERS AND TO BE INSTALLED BY ELECTRICAL CONTRACTOR. REFER TO MANUFACTURER DAS AS NECESSARY FOR INSTALLATION.

   INPUT POWER TRANSFORMER. CONTRACTOR TO MAKE ALL CONNECTIONS NECESSARY FROM MAIN POWER SUPPLY TO TRANSFORMER. FIELD COORDINATE EXACT STEP-UP LOCATION.

FAULT CURRENT CALCULATION:

1,500 KVA TRANSFORMER, 480/244V, 3PH., Z=3.1%

I(MAX) = 1,500,000/(480)(1.732) = 1,805A
I(FAULT) = 1,805A/.031 = 58,225 A

BREAKER TO HAVE 42 Ka MIN. INT. CAPABILITY

VOLTAGE DROP CALCULATION FROM GENERATOR TO ATS

(10) PARALLEL RUNS EA WITH 4-#350 MCM CU CONDRS AND 1-3/0 CU GND.

EFFECTIVE 350 MCM IMPEDANCE IN PVC CONDUIT = 0.174

$$\text{VOLTAGE DROP} = \frac{1.73\ (1000A/10)\ (0.174/1000FT)\ (450FT)}{480V}$$

VOLTAGE DROP %= 0.0282 x 100 = 2.82%

THEREFORE 350 MCM CU WIRE IN (10) PARALLEL RUNS IS SUFFICIENTLY SIZED FOR 1000A.

ALPHA ENGINEERING, INC.
ENGINEERING CONSULTANTS
1818 E. RIO GRANDE • EL PASO, TEXAS 79902
TEL. (915) 838-9900• FAX. (915) 838-9909
REGISTRATION # F005236

REFERENCES -- BENCHMARK

DATE	REVISIONS	BY

CONSULTANT'S NAME
mijares mora ARCHITECTS INC.
EL PASO, TEXAS 79912
111 N. ESTRIA
TEL 915-542-1991

ENGINEER'S SEAL

SCALE

DATE	MAY 2016
DESIGN BY	MM/RP
DRAWN BY	S.D.
CHKD. BY	S.D.
APPD. BY	J.L.M.
JOB NO.	1603

PROJECT NAME
EL PASO INTERNATIONAL AIRPORT CHECKED BAGGAGE INSPECTION SYSTEM
6701 CONVAIR RD. EL PASO, TEXAS

CITY OF EL PASO

SHEET TITLE
RISER DIAGRAM

E7.0

FILE NO. 238512

SHEET 18 OF 21

Date: May 27, 2016 - 12:04pm
DWG PATH: Z:\2016-DWG\P1619 - Airport Luggage Inspection Expansion\CAD\Airport Luggage Inspection Expansion\Sheets\

PANELBOARD SCHEDULE

PANELBOARD "HE": 277/480 V, 3 PHASE, 4 WIRE,1000 AMP. MAIN C.B.
SURFACE MOUNTED, COPPER BUS, DOOR-IN-DOOR

LOAD SERVED	CKT. NO.	BREAKER AMPS, POLE	PHASE A B C	BREAKER AMPS, POLE	CKT. NO.	LOAD SERVED
PANEL BOARD 'PDP1'	1	500	A	400	2	PANELBOARD 'PDP2'
277/480V, 3PH, 4W	3		B		4	277/480V, 3PH, 4W
412 FLA	5	3	C	3	6	341 FLA
TRANSFORMER 'TE'	7	90	A	100	8	UPS *
480-120/208V, 3PH	9		B		10	277/480V, 3PH
75 KVA	11	3	C	3	12	4W
BAGGAGE MAKE UP LIGHTS	13	20/1	A	20/1	14	CBIS 128 LIGHTS
BAGGAGE MAKE UP LIGHTS	15	20/1	B	20/1	16	CBIS 128 LIGHTS
OSR & BHS LIGHTS	17	20/1	C	20/1	18	CBRA 124 LIGHTS
WALL PACKS	19	20/1	A	20/1	20	45 KVA TRANSFORMER 'TA'
SPACE	21	--	B	20/1	22	480-120/208V, 3PH
SPACE	23	--	C	20/1	24	DELTA/WYE
SPACE	25	--	A	--	26	SPACE
SPACE	27	--	B	--	28	SPACE
SPACE	29	--	C	--	30	SPACE
SPACE	31	--	A	--	32	SPACE
SPACE	33	--	B	--	34	SPACE
SPACE	35	--	C	--	36	SPACE
SPACE	37	--	A	--	38	SPACE
SPACE	39	--	B	--	40	SPACE
SPACE	41	--	C	--	42	SPACE

* UPS IS PROVIDED BY OTHERS AND INSTALLED BY CONTRACTOR

PANELBOARD 'HE' LOAD CALCULATIONS

	LOAD (VA)
PANELBOARD 'PDP1'	342,372
PANELBOARD 'PDP2'	283,371
UPS	60,000
LIGHTING @125%	20,000
TRANSFORMER 'TE'	15,900
TOTAL	721,643

I = 721,643 VA/ (480V)(1.73) = 869 A
PANELBOARD 'HE' FED FROM 1000 AMP, 277/480V, 3 PH., TYPE 3R DISCONNECT 'HE' FUSED AT 1000 AMPS
(4) 2" CONDUIT WITH 4-#250 MCM CU. CONDRS.
1-#2/0 CU. CONDR. GND.

PANELBOARD SCHEDULE

PANELBOARD "HA": 277/480 V, 3 PHASE, 4 WIRE, 600 AMP. M.L.O.
SURFACE MOUNTED, COPPER BUS, DOOR-IN-DOOR

LOAD SERVED	CKT. NO.	BREAKER AMPS, POLE	PHASE A B C	BREAKER AMPS, POLE	CKT. NO.	LOAD SERVED
PANEL BOARD 'PDP3'	1	300	A	200	2	PANELBOARD 'PDP4'
277/480V, 3PH, 4W	3		B		4	277/480V, 3PH, 4W
296 FLA	5	3	C	3	6	174 FLA
75 KVA TRANSFORMER 'TA1'	7	90	A	150	8	PANELBOARD 'HA1'
480-120/208V, 3PH	9		B		10	277/480V, 3PH, 4W
DELTA/WYE	11	3	C	3	12	123 FLA
SPACE	13	--	A	--	14	SPACE
SPACE	15	--	B	--	16	SPACE
SPACE	17	--	C	--	18	SPACE
SPACE	19	--	A	--	20	SPACE
SPACE	21	--	B	--	22	SPACE
SPACE	23	--	C	--	24	SPACE
SPACE	25	--	A	--	26	SPACE
SPACE	27	--	B	--	28	SPACE
SPACE	29	--	C	--	30	SPACE
SPACE	31	--	A	--	32	SPACE
SPACE	33	--	B	--	34	SPACE
SPACE	35	--	C	--	36	SPACE
SPACE	37	--	A	--	38	SPACE
SPACE	39	--	B	--	40	SPACE
SPACE	41	--	C	--	42	SPACE

PANELBOARD 'HA' LOAD CALCULATIONS

	LOAD (VA)
PANELBOARD 'PDP3'	245,976
PANELBOARD 'PDP4'	144,594
TRANSFORMER 'TA1'	31,800
TOTAL	422,370

I = 422,370 VA/ (480V)(1.73) = 509 AMPS
PANELBOARD 'HA' FED FROM 600 AMP, 277/480V, 3 PH., TYPE 3R DISCONNECT 'HA' FUSED AT 600 AMPS 1U
(4) 2" CONDUIT WITH 4-#250 MCM CU. CONDRS.
1-#2/0 CU. CONDR. GND.

PANELBOARD SCHEDULE

PANELBOARD "HA1": 277/480 V, 3 PHASE, 4 WIRE, 225 AMP. M.L.O.
SURFACE MOUNTED, COPPER BUS, DOOR-IN-DOOR

LOAD SERVED	CKT. NO.	BREAKER AMPS, POLE	PHASE A B C	BREAKER AMPS, POLE	CKT. NO.	LOAD SERVED
SPACE	1	--	A	--	2	SPACE
SPACE	3	--	B	--	4	SPACE
SPACE	5	--	C	--	6	SPACE
ECU-3	7	15	A	20	8	AHU-1
460V, 3PH, 4W	9		B		10	460V, 3PH
7.4 MCA	11	3	C	3	12	17.4 MCA 14500
AHU-2	13	20	A	20	14	AHU-3
460V, 3PH	15		B		16	460V, 3PH
17.4 MCA	17	3	C	3	18	14 MCA 11600
ECU-2	19	15	A	15	20	ECU-1
460V, 3PH, 4W	21		B		22	460V, 3PH, 4W
7.4 MCA	23	3	C	3	24	7.4 MCA 6200
SPACE	25	--	A	30	26	MUA-1
SPACE	27	--	B		28	460V, 3PH, 4W
SPACE	29	--	C	3	30	21 MCA 14500
SPACE	31	--	A	--	32	SPACE
SPACE	33	--	B	--	34	SPACE
SPACE	35	--	C	--	36	SPACE
SPACE	37	--	A	--	38	SPACE
SPACE	39	--	B	--	40	SPACE
SPACE	41	--	C	--	42	SPACE

PANELBOARD 'HA1' LOAD CALCULATIONS

	LOAD (VA)
MUA-1 @125%	21,800
ECU (TYPICAL OF 3)	18,600
AHU-1,2	29,000
AHU-3	11,600
TOTAL	81,000

I = 81,000 VA/ (480V)(1.73) = 98 AMPS
225 AMP, 277/480V, 3 PH., PANELBOARD 'HA1'
FED FROM 150A C.B. IN PANEL 'HA'
2" CONDUIT WITH 4-1/0 THHN CU. CONDRS.
1-#6 CU. CONDR. FOR EQUIPMENT GND.
1-#6 CU. CONDR. FOR SERIVCE GND.

PANELBOARD SCHEDULE

PANELBOARD "LA1": 120/208 V, 3 PHASE, 4 WIRE, 125 AMP. M.C.B.
SURFACE MOUNTED, COPPER BUS, DOOR-IN-DOOR

LOAD SERVED	CKT. NO.	BREAKER AMPS, POLE	PHASE A B C	BREAKER AMPS, POLE	CKT. NO.	LOAD SERVED
CF-1	1	15	A	20/1	2	AHU-1 COURTESY CIRCUIT
CF-2	3		B	20/1	4	AHU-2 COURTESY CIRCUIT
CF-3	5	3	C	20/1	6	AHU-3 COURTESY CIRCUIT
INFRARED HEATERS	7	20/1	A	20/1	8	CBIS 128 OUTLETS
EVAP. COOLER DRAIN PUMPS	9	20/1	B	20/1	10	CBIS 128 OUTLETS
EVAP. COOLER PUMPS	11	20/1	C	20/1	12	CBIS 128 OUTLETS
EVAP. COOLER DRAIN PUMPS	13	20/1	A	20/1	14	MAKE-UP 129 OUTLETS
EVAP. COOLER PUMPS	15	20/1	B	20/1	16	MAKE-UP 129 OUTLETS
EVAP. COOLER DRAIN PUMPS	17	20/1	C	20/1	18	ROOF OUTLET
EVAP. COOLER PUMPS	19	20/1	A	20/1	20	MAKE-UP 129 OUTLETS
CO/NO2 MONITER/CONTROLLER	21	20/1	B	20/1	22	MAKE-UP 129 OUTLETS
CEILING FAN # 4,5	23	20/1	C	20/1	24	MAKE-UP 129 OUTLETS
ROLL UP DOORS	25	20/1	A	20/1	26	ROLL UP DOORS
ROLL UP DOORS	27	20/1	B	20/1	28	ROLL UP DOORS
ROLL UP DOORS	29	20	C	20	30	ROLL UP DOORS
208V, 1PH	31	2	A	2	32	208V, 1PH
ROLL UP DOORS	33	20	B	20	34	ROLL UP DOORS
208V, 1PH	35	2	C	2	36	208V, 1PH
CBRA CONVEYOR DOOR	37	20/1	A	20/1	38	ROLL UP DOORS
CBRA OUTLETS	39	20/1	B	--	40	SPACE
TSA BSH OUTLETS	41	20/1	C	--	42	SPACE

PANELBOARD 'LA1' LOAD CALCULATIONS

	LOAD (VA)
OUTLETS	10,000
CEILING FAN 1,2,3	3,500
WU-1	1,500
ROLL-UP DOOR @125%	3,400
ROLL-UP DOORS	13,400
TOTAL	31,800 VA

I = 31,800 VA/ (208V)(1.73) = 88 AMPS
125 AMP, 120/208V, 3 PH., 4W, PANELBOARD 'LA1'
SERVED BY 75 KVA, 480-120/208V, 3PH, 4W TRANSFORMER 'TA1'
1 1/2" CONDUIT WITH 4-#1 THHN CU. CONDRS.
1-#8 CU. CONDR. GND.

PANELBOARD SCHEDULE

PANELBOARD "LE": 120/208 V, 3 PHASE, 4 WIRE, 200 AMP. M.C.B.
SURFACE MOUNTED, COPPER BUS, DOOR-IN-DOOR

LOAD SERVED	CKT. NO.	BREAKER AMPS, POLE	PHASE A B C	BREAKER AMPS, POLE	CKT. NO.	LOAD SERVED
OSR OUTLETS	1	20/1	A	20/1	2	BHS/CONTROL OUTLETS
OSR OUTLETS	3	20/1	B	20/1	4	BHS/CONTROL OUTLETS
OSR OUTLETS	5	20/1	C	20/1	6	BHS/CONTROL OUTLETS
CBRA AREA STATION OUTLETS	7	20/1	A	20/1	8	CBRA AREA STATION OUTLETS
CBRA AREA STATION OUTLETS	9	20/1	B	20/1	10	CBRA AREA STATION OUTLETS
CBRA AREA STATION OUTLETS	11	20/1	C	20/1	12	CBRA AREA STATION OUTLETS
CBRA AREA STATION OUTLETS	13	20/1	A	20/1	14	CBRA AREA STATION OUTLETS
CBRA OUTLETS	15	20/1	B	30	16	CU-1 208V ,1PH
CBRA OUTLETS	17	20/1	C	1	18	25 MCA
PANEL BOARD 'LE1'	19	80	A	15	20	EF-1
277/480V, 3PH, 4W	21		B		22	208V, 3PH
412 FLA	23	3	C	3	24	3.5 MCA
SPACE	25	--	A	15	26	EF-2
I.T. ROOM 115 QUAD	27	20/1	B		28	208V, 3PH
I.T. ROOM 115 NEMA OUTLET	29	30	C	3	30	3.5 MCA
208V, 1PH, L6-30	31	2	A	20/1	32	CBRA AREA STATION OUTLETS
I.T. ROOM 115 QUAD	33	20/1	B	20/1	34	CBRA AREA STATION OUTLETS
I.T. ROOM 115 NEMA OUTLET	35	30	C	--	36	SPACE
208V, 1PH, L6-30	37	2	A	--	38	SPACE
SPACE	39	--	B	--	40	SPACE
SPACE	41	--	C	--	42	SPACE

PANELBOARD 'LE' LOAD CALCULATIONS

	LOAD (VA)
OUTLETS	13,000
EF-1 @125%	1,600
EF-2	1,300
PANELBOARD 'LE1'	15,000
TOTAL	30,900 VA

I = 30,900 VA/ (208V)(1.73) = 85 AMPS
125 AMP, 120/208V, 3 PH., 4W, PANELBOARD 'LE'
SERVED BY 75 KVA, 480-120/208V, 3PH, 4W TRANSFORMER 'TE'
1-#8 CU. CONDR. GND.
1 1/2" CONDUIT WITH 4-#1 THHN CU. CONDRS.

PANELBOARD SCHEDULE

PANELBOARD "LE1": 120/208 V, 3 PHASE, 4 WIRE, 125 AMP. M.L.O.
SURFACE MOUNTED, COPPER BUS, DOOR-IN-DOOR

LOAD SERVED	CKT. NO.	BREAKER AMPS, POLE	PHASE A B C	BREAKER AMPS, POLE	CKT. NO.	LOAD SERVED
I.T. ROOM 119 NEMA OUTLET	1	30	A	30	2	I.T. ROOM 119 NEMA OUTLET
208V, 1PH, L6-30	3	2	B	2	4	208V, 1PH, L6-30
I.T. ROOM 119 NEMA OUTLET	5	30	C	30	6	I.T. ROOM 119 NEMA OUTLET
208V, 1PH, L6-30	7	2	A	2	8	208V, 1PH, L6-30
I.T. ROOM 119 QUAD	9	20/1	B	20/1	10	I.T. ROOM 120 QUAD
I.T. ROOM 119 QUAD	11	20/1	C	20/1	12	I.T. ROOM 120 QUAD
PLC ROOM 123 QUAD	13	20/1	A	--	14	
PLC ROOM 123 QUAD	15	20/1	B	--	16	
PLC ROOM 123	17	30	C	--	18	
L6-30A OUTLET	19	2	A	--	20	
PLC ROOM 123	21	30	B	--	22	
L6-30A OUTLET	23	2	C	--	24	
	25	--	A	--	26	
	27	--	B	--	28	
	29	--	C	--	30	
	31	--	A	--	32	
	33	--	B	--	34	
	35	--	C	--	36	
	37	--	A	--	38	
	39	--	B	--	40	
	41	--	C	--	42	

PANELBOARD 'LE1' LOAD CALCULATIONS

	LOAD (VA)
OUTLETS	15,000
TOTAL	15,000 VA

I = 15,000 VA/ (208V)(1.73) = 41 AMPS
125 AMP, 120/208V, 3 PH., 4W, PANELBOARD 'LE1'
SERVED BY 80A/3P BREAKER IN PANELBOARD 'LE'
1 1/4" CONDUIT WITH 4-#2 THHN CU. CONDRS.
1-#8 CU. CONDR. GND.

ALPHA ENGINEERING, INC.
ENGINEERING CONSULTANTS
1818 E. RIO GRANDE • EL PASO, TEXAS 79902
TEL. (915) 838-9900 • FAX. (915) 838-9909
REGISTRATION # F005236

REFERENCES -- BENCHMARK

DATE	REVISIONS	BY

CONSULTANT'S NAME
mijares mora
ARCHITECTS INC
111 N. FESTIVAL
TEL: 915-542-1591
EL PASO, TEXAS 79912
FAX: 542-1594

ENGINEER'S SEAL

SCALE

DATE MAY 2016
DESIGN BY MMA/BNP
DRAWN BY S.D
CHKD. BY S.D.
APPD. BY J.L.M.
JOB NO. 1603

PROJECT NAME
EL PASO INTERNATIONAL AIRPORT
CHECKED BAGGAGE INSPECTION SYSTEM
6701 CONVAIR RD. EL PASO, TEXAS

CITY OF EL PASO

SHEET TITLE
PANEL SCHEDULES
E7.1

FILE NO. 238512
SHEET 1□ OF 21

ELECTRICAL SYMBOL LEGEND

SYMBOL	DESCRIPTION
"A"	FLUORESCENT FIXTURE, LETTER DENOTES TYPE
"G"	WALL MOUNTED FIXTURE, LETTER DENOTES TYPE
"X1"	EXIT LIGHT FIXTURE, CONNECT TO UNSWITCHED HOT CONDUCTOR.
"EM"	EMERGENCY LIGHTS FIXTURE, CONNECT TO UNSWITCHED HOT CONDUCTOR.
"EMX"	COMBINATION EXIT/EMERGENCY LIGHT FIXTURE, CONNECT TO UNSWITCHED HOT CONDUCTOR.
EF	EXHAUST FAN, SEE MECHANICAL PLANS
2	KEYED NOTE SYMBOL–ELECTRICAL
—EUG—	ELECTRICAL UNDERGROUND CIRCUIT, 2'–0" MINIMUM BELOW GRADE.
—LV—	LOW VOLTAGE WIRING CIRCUIT
WP	WEATHERPROOF
AFF	ABOVE FINISHED FLOOR
———	BRANCH CIRCUIT IN WALLS OR CEILING.
- - - - -	BRANCH CIRCUIT UNDER FLOOR.
$	SINGLE POLE WALL SWITCH, 48" TO CENTER. UNLESS OTHERWISE NOTED.
$3	THREE–WAY WALL SWITCH, 48" TO CENTER UNLESS OTHERWISE NOTED.
$4	FOUR–WAY WALL SWITCH, 48" TO CENTER. UNLESS OTHERWISE NOTED.
	DATA/TEL. SYSTEM OUTLET AT 18" AFF TO CENTER UNLESS OTHERWISE NOTED., STUBB–UP TO ABOVE SUSPENDED CEILING WITH 1" COND. WITH BUSHING AND PULLSTRING.
	JUNCTION BOX
	JUNCTION BOX INSTALLED ABOVE THE CEILING WITH FLEXIBLE CONDUIT CONNECTION TO LAY–IN FIXTURES. MAXIMUM 6'–0" LENGTH OF CONDUIT WITH REQUIRED CONDUCTORS ALONG WITH GREEN WIRE GROUND.
	DUPLEX OUTLET, 18" A.F.F. TO CENTER OF BOX, UNLESS OTHERWISE NOTED
GFI	GROUND FAULT CIRCUIT INTERRUPTING DUPLEX RECEPTACLE, 18" A.F.F., TO CENTER, UNLESS OTHERWISE NOTED
	GROUND FAULT CIRCUIT INTERRUPTING DUPLEX RECEPTACLE MOUNTED AT 44" AFF. TO CENTER, UNLESS OTHERWISE NOTED.
	RECEPTACLE, 125/250VAC – 30A. NEMA 6–30R, 18" A.F.F, TO CENTER UNLESS OTHERWISE NOTED
	QUADRUPLEX RECEPTACLE, 125VAC–20A, NEMA 5–20R, 18" A.F.F., TO CENTER UNLESS OTHERWISE NOTED
T	THERMOSTAT AT 48" A.F.F TO CENTER, PROVIDED BY MECHANICAL CONTRACTOR.
	NEW PANEL BOARD. SEE PANEL SCHEDULE FOR CHARACTERISTICS.
	EXISTING PANEL BOARD TO REMAIN. NO WORK REQUIRED UNLESS NOTED.
	DISCONNECT, TO BE NEMA 3R IF INSTALLED OUTDOORS.
	MOTOR CONTROLLER, SIZE AND POLES FOR MOTOR FURNISHED.
T	TRANSFORMER AS NOTED

GENERAL NOTES:

A. ELECTRICAL INSTALLATION MUST FOLLOW ALL NATIONAL AND LOCAL ELECTRICAL CODES. INSTALLATION MUST CONFORM TO THE LOCAL POWER COMPANY'S SPECIFICATIONS.

B. ELECTRICAL CONTRACTOR MUST COORDINATE AND VERIFY WITH MECHANICAL AND PLUMBING CONTRACTOR THE LOCATION AND ELECTRICAL REQUIREMENTS TO ALL A/C EQUIPMENT, MOTORS, PUMPS, T–STATS., INTERLOCKING WIRING, ETC.

C. ALL MATERIALS SHALL BE IN ACCORDANCE WITH THE NATIONAL ELECTRICAL MANUFACTURERS ASSOCIATION AND SHALL BE LISTED BY THE U.L.

D. ELECTRICAL CONTRACTOR MUST COORDINATE ALL POWER SERVICE ON THIS PROJECT. THE CONTRACTOR IS RESPONSIBLE FOR ALL FEES FOR TEMPORARY SERVICE.

E. ELECTRICAL CONTRACTOR IS RESPONSIBLE FOR ALL PERMIT AND INSPECTION FEES REQUIRED BY THE GOVERNING BODIES.

F. ELECTRICAL CONTRACTOR MUST COMPLY WITH THE LATEST A.D.A. REQUIREMENTS.

G. MINIMUM SIZE CONDUCTORS SHALL BE #12 THW CU. UNLESS NOTED OR SIZED BY CODE.

H. ALL WIRING MUST BE IN CONDUIT, INCLUDING ALL L.V. WIRING. THIN WALL CONDUIT (EMT) CAN BE INSTALLED CONCEALED ABOVE CEILING, IN FURRED WALLS, AND WALLS EXCEPT WHERE THOSE WALLS ARE GROUTED SOLID. USE FLEX CONDUIT FOR MOTORS AND LIGHTING FIXTURES. USE WATER TIGHT FLEX CONDUIT FOR WATER HEATERS, DISPOSALS, EXTERIOR CONNECTIONS, ETC. BOND ACCORDING TO CODE.

I. VERIFY LOCATIONS OF ALL ELECTRICAL EQUIPMENT WITH OTHER TRADES TO AVOID CONFLICTS AND INTERFERENCES.

J. CONTRACTOR TO COORDINATE NEW SERVICE WITH OWNER AND LOCAL UTILITY AND OWNER AS SOON AS CONTRACT IS LET.

K. CONTRACTOR MUST VISIT SITE TO BECOME FAMILIAR WITH EXISTING CONDITIONS BEFORE BIDDING ON THIS PROJECT.

L. ALL ELECTRICAL EQUIPMENT IN FIRE RATED WALLS MUST BE INSTALLED SO THAT FIRE RATING IS NOT COMPROMISED.

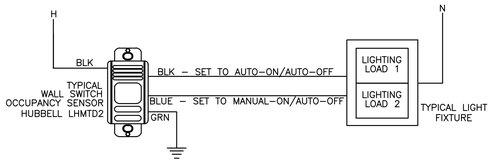

1 E7.1 WALL MOUNTED SENSOR WIRING DIAGRAM

S2

N.T.S.

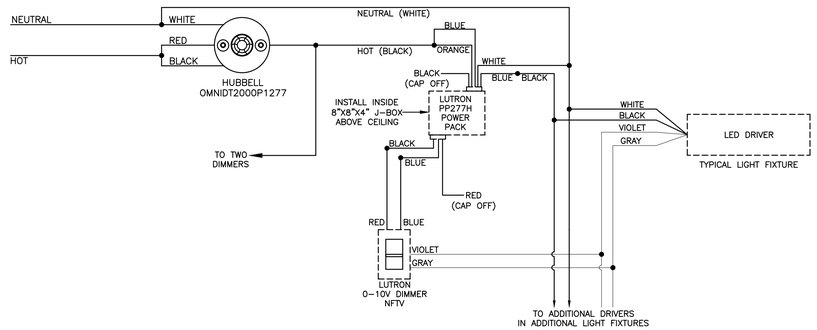

2 E7.1 LUTRON DIMMER WIRING DIAGRAM

N.T.S.

* NOTES: DIMMER SWITCH TO BE LUTRON NOVA NFTV–IV WITH LUTRON PP–277H POWER PACK. DIMMER SWITCH MUST BE LIGHT FIXTURE COMPATIBLE. COORDINATE WITH LIGHT FIXTURE MANUFACTURER FOR COMPATIBLE DIMMERS. INSTALL PP–277H POWER PACK ABOVE CEILING AND MAKE ALL NECESSARY CONNECTIONS TO LIGHT FIXTURE LED DRIVERS. EACH DIMMER MUST BE INSTALLED IN INDIVIDUAL BOXES. DIMMERS MUST NOT BE GANGED.

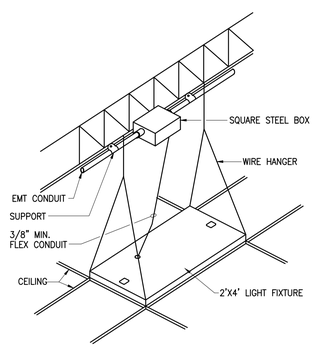

3 E7.1 2' X 4' LAY–IN FIXTURE MOUNTING DETAIL

N.T.S.

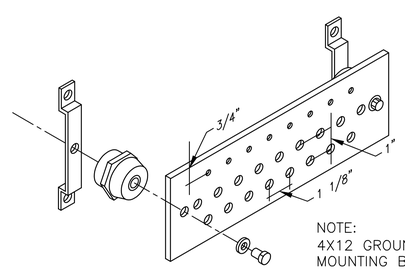

NOTE:
4X12 GROUND BAR W/ WALL MOUNTING BRACKETS AND INSULATORS

8 E7.1 GROUND BAR DETAIL

SCALE : N.T.S.

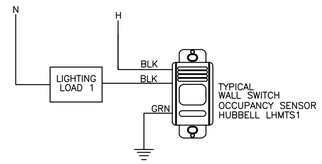

4 E7.1 WALL MOUNTED SENSOR WIRING DIAGRAM

S1

N.T.S.

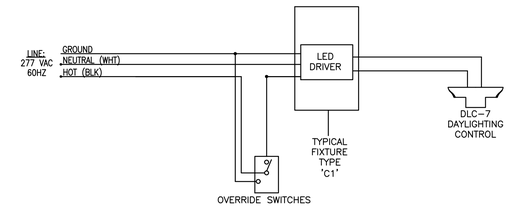

5 E7.1 DAYLIGHTING CONTROL DIAGRAM

NOT TO SCALE

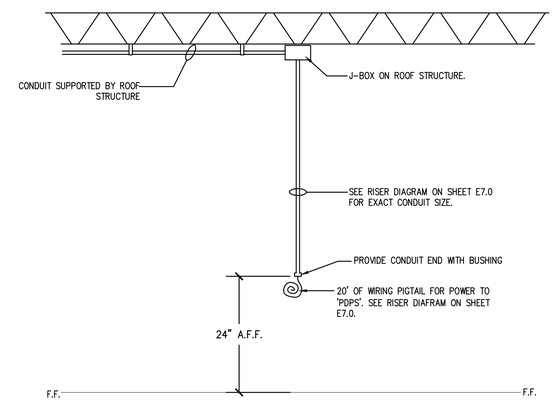

6 E7.1 PANEL 'PDP' CONDUIT DETAIL

NOT TO SCALE

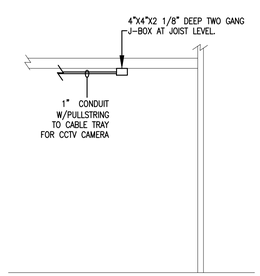

7 E7.1 CCTV CAMERA DETAIL

VERIFY EXACT ROUGH–IN REQUIREMENTS WITH OWNER'S SECURITY CONTRACTOR BEFORE DOING ANY WORK.

N.T.S.

ALPHA ENGINEERING, INC.
ENGINEERING CONSULTANTS
1818 E. RIO GRANDE • EL PASO, TEXAS 79902
TEL: (915) 838–9900• FAX. (915) 838–9909
REGISTRATION # F005236

REFERENCES – BENCHMARK

DATE	REVISIONS	BY

CONSULTANT'S NAME
mijares • mora
ARCHITECTS INC.
EL PASO, TEXAS 79912
FAX: 915-542-1984

ENGINEER'S SEAL

SCALE

DATE	MAY 2016
DESIGN BY	MM/RP
DRAWN BY	S.D.
CHKD. BY	S.D.
APPD. BY	J.L.M.
JOB NO.	1603

PROJECT NAME

EL PASO INTERNATIONAL AIRPORT
CHECKED BAGGAGE INSPECTION SYSTEM
6701 CONVAIR RD. EL PASO, TEXAS

EL PASO INTERNATIONAL AIRPORT

CITY OF EL PASO

SHEET TITLE

GENERAL NOTES & DETAILS

E7.2

FILE NO. 238512

SHEET 2 OF 21

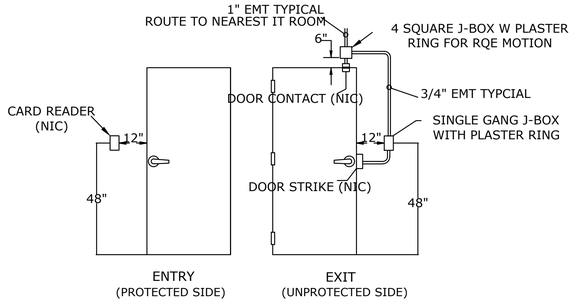

1 E7.2 Type A
Electric Door Strike

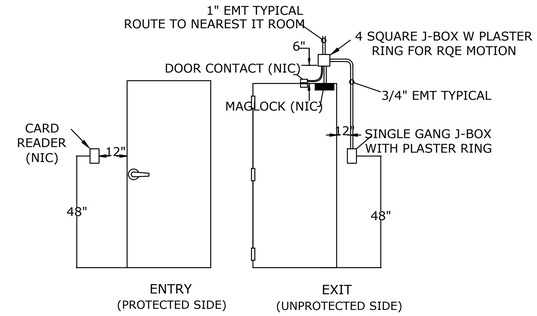

2 E7.2 Type B
Magnetic Lock

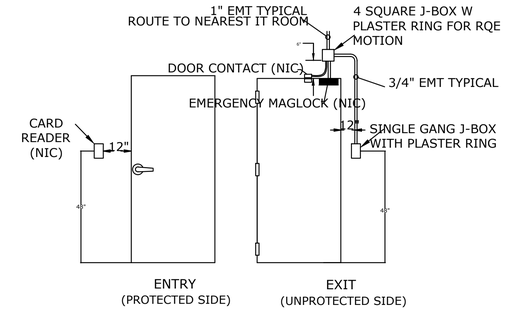

3 E7.2 Type C
Emergency Magnetic Lock

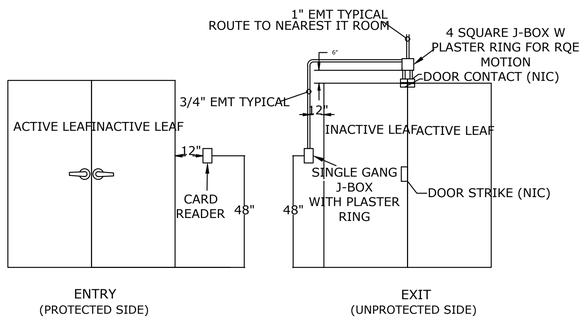

4 E7.2 Type D
Electric Strike - Dbl Door

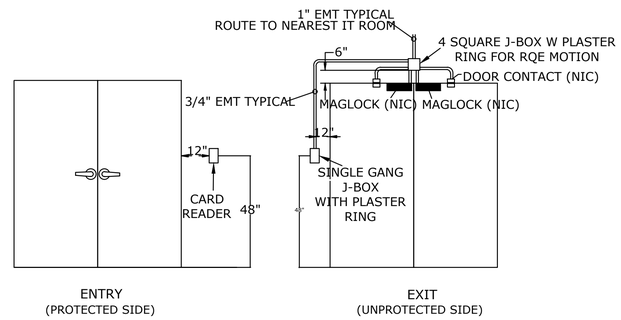

5 E7.2 Type E
Magnetic Lock - Dbl Door

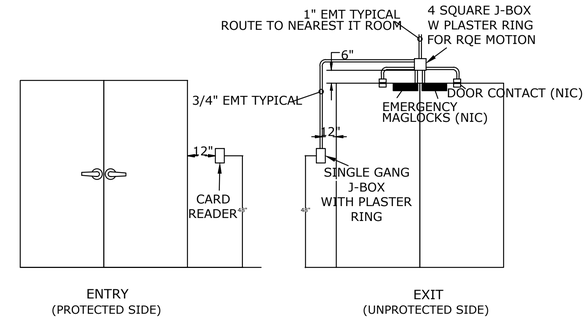

6 E7.2 Type F
Emergency Magnetic Lock - Dbl Door

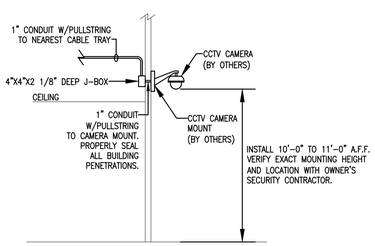

8 E7.2 EXTERIOR CCTV CAMERA DETAIL EXT
VERIFY EXACT ROUGH-IN REQUIREMENTS WITH OWNER'S SECURITY CONTRACTOR BEFORE DOING ANY WORK. N.T.S.

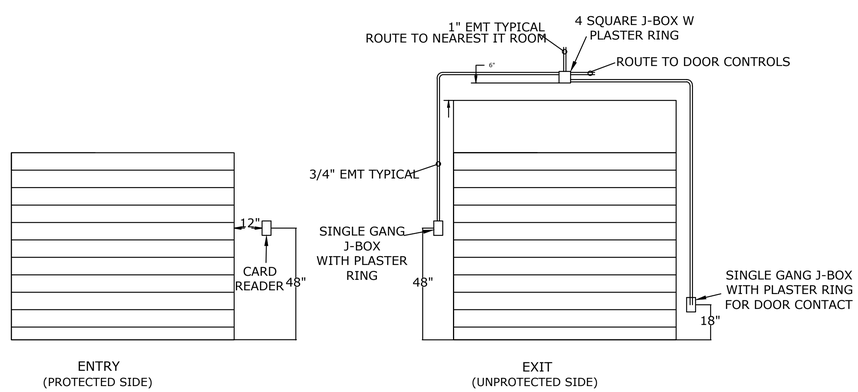

7 E7.2 Type G
Electric Strike - Dbl Door

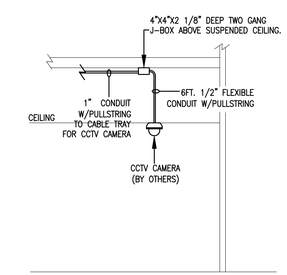

9 E7.2 CCTV CAMERA DETAIL
VERIFY EXACT ROUGH-IN REQUIREMENTS WITH OWNER'S SECURITY CONTRACTOR BEFORE DOING ANY WORK. N.T.S.

ALPHA ENGINEERING, INC.
ENGINEERING CONSULTANTS
1818 E. RIO GRANDE • EL PASO, TEXAS 79902
TEL. (915) 838-9900• FAX. (915) 838-9909
REGISTRATION # F-005236

REFERENCES -- BENCHMARK

DATE	REVISIONS	BY

CONSULTANT'S NAME
mijares mora ARCHITECTS INC.
111 N. FESTIVAL
EL PASO, TEXAS 79912
TEL: 915-542-1991 FAX: 542-7984

ENGINEER'S SEAL

SCALE

DATE	MAY 2016
DESIGN BY	MM/BP
DRAWN BY	S.D.
CHKD. BY	S.D.
APPD. BY	J.L.M.
JOB NO.	1603

PROJECT NAME
EL PASO INTERNATIONAL AIRPORT
CHECKED BAGGAGE INSPECTION SYSTEM
8701 CONVAIR RD. EL PASO, TEXAS

CITY OF EL PASO

SHEET TITLE
SPECIAL SYSTEM DETAILS

E7.3

FILE NO. 238512

SHEET 21 OF 21

EL PASO INTERNATIONAL AIRPORT BAGGAGE HANDLING SYSTEM

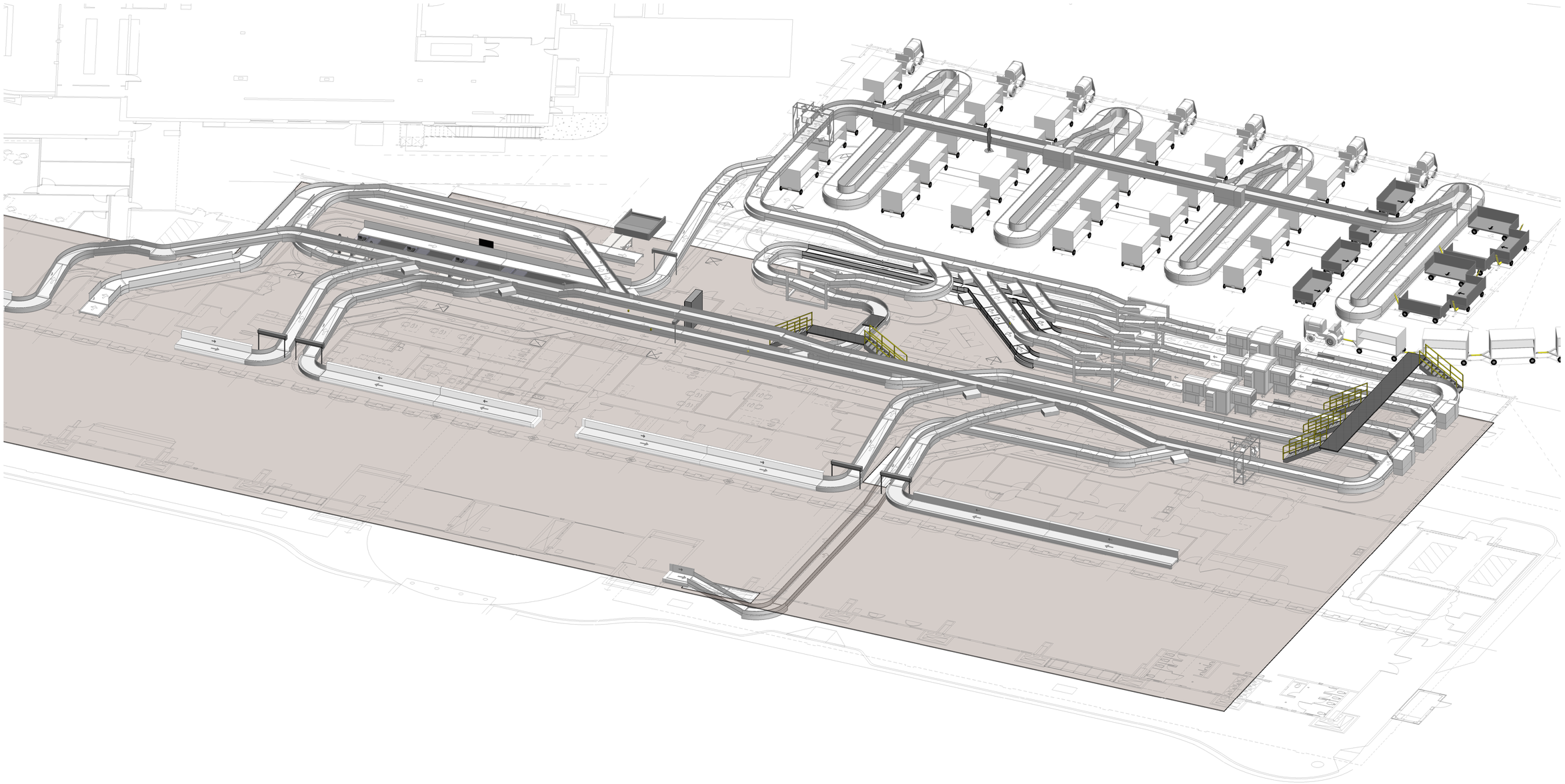

REFERENCES – BENCHMARK

DATE	REVISIONS	BY

CONSULTANTS NAME

mijares ● mora
ARCHITECTS INC.
111 N. FESTIVAL
EL PASO, TEXAS 79912
TEL: 915-542-1989
FAX: 915-542-1994

ARCHITECT'S SEAL

STATE OF TEXAS
ASHER N. DAVID
119023
MAY 31, 2016
LICENSED
PROFESSIONAL ENGINEER

SCALE

DATE	MAY 2016
DESIGN BY	P.C.
DRAWN BY	P.C.
CHKD. BY	C.S.
APPD. BY	J.M.
JOB NO.	201370

PROJECT NAME

EL PASO INTERNATIONAL AIRPORT
CHECKED BAGGAGE INSPECTION
SYSTEM

6701 CONVAIR ROAD EL PASO, TEXAS

EL PASO
INTERNATIONAL AIRPORT

CITY OF
EL PASO

SHEET TITLE

COVER PAGE

B0.00

FILE NO. 238512

SHEET OF

FOR BIDDING & PERMITTING ONLY, NOT FOR CONSTRUCTION PURPOSES.

CONVEYOR LEGEND FOR PLANS

- 30° POWER TURN (OPTIONAL DRIVE LOCATIONS SHOWN)
- 45° POWER TURN (OPTIONAL DRIVE LOCATIONS SHOWN)
- 45° SPIRAL POWER TURN (OPTIONAL DRIVE LOCATIONS SHOWN) (MAX ELEVATION CHANGE 1'-0")
- 90° POWER TURN (OPTIONAL DRIVE LOCATIONS SHOWN)
- 90° SPIRAL POWER TURN (OPTIONAL DRIVE LOCATIONS SHOWN) (MAX ELEVATION CHANGE 2-0")
- INCLINE CONVEYOR
- DECLINE CONVEYOR
- END ROLLER
- METERING CONVEYOR
- 24" MINI-PULLER DRIVE
- 24" MINI-CENTER DRIVE
- 60" PULLER DRIVE
- 60" CENTER DRIVE
- 24" MINI UNDERSLUNG DRIVE
- 60" STANDARD UNDERSLUNG DRIVE
- 45° MERGE CONVEYOR
- AUTOMATIC TAG READER
- VERTICAL SORT CONVEYOR
- HIGH SPEED DIVERTER
- FIRE/SECURITY DOOR
- BAGGAGE MEASURING ARRAY
- L3 6700 EDS DEVICE
- CT-80DR EDS DEVICE

CONVEYOR LEGEND FOR ELEVATIONS

- 30° POWER TURN (OPTIONAL DRIVE LOCATIONS SHOWN)
- 45° POWER TURN (OPTIONAL DRIVE LOCATIONS SHOWN)
- 45° SPIRAL POWER TURN (OPTIONAL DRIVE LOCATIONS SHOWN) (MAX ELEVATION CHANGE 1'-0")
- 90° POWER TURN (OPTIONAL DRIVE LOCATIONS SHOWN)
- 90° SPIRAL POWER TURN (OPTIONAL DRIVE LOCATIONS SHOWN) (MAX ELEVATION CHANGE 2-0")
- INCLINE CONVEYOR
- DECLINE CONVEYOR
- END ROLLER
- METERING CONVEYOR
- 24" MINI-PULLER DRIVE
- 24" MINI-CENTER DRIVE
- 60" PULLER DRIVE
- 60" CENTER DRIVE
- 24" MINI UNDERSLUNG DRIVE
- 60" STANDARD UNDERSLUNG DRIVE
- 45° MERGE CONVEYOR
- AUTOMATIC TAG READER
- VERTICAL SORT CONVEYOR
- HIGH SPEED DIVERTER (SIDE VIEW)
- HIGH SPEED DIVERTER (FRONT VIEW)
- FIRE/SECURITY DOOR
- BAGGAGE MEASURING ARRAY
- L3 6700 EDS DEVICE
- CT-80DR EDS DEVICE

GENERAL SYMBOL LEGEND

- TUG & CART TRAFFIC FLOW DIRECTION
- CONVEYOR FLOW DIRECTION
- TOP OF BELT ELEVATION (UNLESS OTHERWISE NOTED)
- A — POWER DROP POINT DESIGNATION
- M — MOTOR CONTROL PANEL
- XXY-ZZ — ITEM NUMBER EXISTING EQUIPMENT
- XXY-ZZ — ITEM NUMBER NEW OR MODIFIED EQUIPMENT
- XXY-ZZ — ITEM NUMBER RE-NUMBERED UNMODIFIED EQUIPMENT
- XXY-ZZ — ITEM NUMBER ELECTRICAL CONTROL DEVICE
- NEW BHS EQUIPMENT
- NEW BHS EQUIPMENT WITH MAINTENANCE PLATFORM
- CONVEYORS TO BE DEMOLISHED
- EXISTING BHS EQUIPMENT
- 18° BREAK OVER CONVEYOR (10' RADIUS - TYPICAL)
- CONVEYOR CROSS SECTION
- CONVEYOR WITH DRIVE CROSS SECTION
- SHIPS LADDER
- VERTICAL LADDER

GENERAL NOTES

THE FOLLOWING REQUIREMENTS, TOGETHER WITH THE PROJECT SPECIFICATIONS AND BHS DRAWINGS SHALL APPLY:

1. CHECK AND FIELD VERIFY ALL BHS RELATED DIMENSIONS ON THE JOB SITE BEFORE PROCEEDING WITH WORK AND BE RESPONSIBLE FOR THEIR ACCURACY. IF DISCREPANCIES ARE FOUND BETWEEN THE BHS DRAWINGS, SPECIFICATION, AND FIELD CONDITIONS THEY ARE TO BE REPORTED TO THE OWNER.
2. FINISHED FLOOR ELEVATIONS PROVIDED FOR INFORMATION ONLY. REFERENCE ARCHITECTURAL DRAWINGS FOR ALL FLOOR ELEVATIONS AND BUILDING INFORMATION.
3. NO DIMENSIONS SHALL BE SCALED, DRAWING DIMENSIONS SHOWN SHALL BE USED.
4. BHS CONTRACTOR IS RESPONSIBLE FOR IDENTIFYING BHS RIGHT-OF-WAY ISSUES AND REPORTING THEM TO THE OWNER.
5. BHS CONTRACTOR TO COORDINATE WITH ALL OTHER TRADES TO MAINTAIN BAGGAGE SYSTEM RIGHT-OF-WAY.
6. ALL DIMENSIONS ARE FROM COLUMN CENTER LINE TO FACE OF CONVEYOR SIDE GUARD, UNLESS OTHERWISE NOTED.
7. ALL OTHER TRADES TO MAINTAIN 2'-6" CLEAR RIGHT-OF-WAY (UNLESS OTHERWISE NOTED) FROM TOP OF BELT TO NEAREST OBSTRUCTION. HANGING OF ANY EQUIPMENT COMPONENTS MECHANICAL, ELECTRICAL, PLUMBING, HVAC... FROM THE CONVEYOR, CATWALK OR ASSOCIATED SUPPORTS IS NOT ALLOWED.
8. CONTRACTOR TO SUPPLY SAFETY DEVICES PER CONTRACT SPECIFICATIONS.

ABBREVIATIONS

GENERAL ABBR.	DESCRIPTION
AFF	ABOVE FINISHED FLOOR
ALT	ALTERNATE
ARCH	PROJECT ARCHITECT
ATR	AUTOMATIC TAG READER
BDD	BAGGAGE DIMENSIONING DEVICE
B.F.	BETWEEN FRAME
BHS	BAGGAGE HANDLING SYSTEM
BLDG.	BUILDING
BMA	BAGGAGE MEASURING ARRAY
BOS	BOTTOM OF STEEL
BOT	BOTTOM
BRP	BAGGAGE REMOVAL POINT
BSD	BAGGAGE STATUS DISPLAY
BVS	BAGGAGE VIEWING STATION
CBIS	CHECKED BAGGAGE INSPECTION SYSTEM
CBRA	CHECKED BAGGAGE RESOLUTION AREA
CENT'L	CENTRAL
CL	CENTERLINE
CLR	CLEAR
CONC.	CONCRETE
CONTR	CONTAINER
CONT	CONTINUOUS
CONV	CONVEYOR
CS	CURBSIDE
DID	DIRECTIONAL INPUT DEVICE
DWG	DRAWINGS
EDS	EXPLOSIVE DETECTION SYSTEM
EL	ELEVATION
ENGR.	ENGINEER OF RECORD
EQUIP.	EQUIPMENT
ETD	EXPLOSIVE TRACE DETECTION
FDRS	FIELD DATA REPORTING SYSTEM
FIN	FINISH
F.F.	FINISHED FLOOR
GC	GENERAL CONTRACTOR
HSD	HIGH SPEED DIVERTER
I.D.	IDENTIFICATION
INTFC	INTERFACE
INTL	INTERNATIONAL
IQ	IMAGE QUALITY
ISD	INTIGRATED SCREENING DEVICE
LAN	LOCAL AREA NETWORK
LVL	LEVEL
MAINT.	MAINTENANCE
MAX	MAXIMUM
MEZZ.	MEZZANINE
MIN	MINIMUM
MCC	MULTIPLEX CONTROL CONSOLE
MCP	MOTOR CONTROL PANEL
NIC	NOT IN CONTRACT
NO.	NUMBER
OA	OVERALL
O/C	ON CENTER
OPNG.	OPENING
OPS	OPERATIONS
PAX	PASSENGERS
PDP	POWER DROP POINT
PVS	PRIMARY VIEWING STATION
RFID	RADIO FREQUENCY IDENTIFICATION
REF	REFERENCE
REQ'D	REQUIRED
RRS	REMOTE RESOLUTION STATION
SIM.	SIMILAR
SOP	STANDARD OPERATING PROCEDURE
S.S.	STAINLESS STEEL
STR	STRUCTURE
SVS	SECONDARY VIEWING STATION
TEMP	TEMPORARY
TERM	TERMINAL
TC	TICKET COUNTER
TO	TOP OF
TOB	TOP OF BELT
TOC	TOP OF CATWALK
TOS	TOP OF STEEL
TOT	TOP OF TILT TRAY
TYP.	TYPICAL
V.I.F.	VERIFY IN FIELD
VSU	VERTICAL SORT UNIT

TYPICAL CONVEYOR RIGHT-OF-WAY

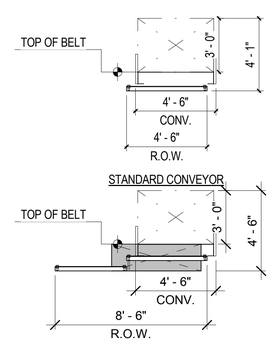

STANDARD CONVEYOR WITH PLATFORM AND DRIVE SECTION

IDENTIFICATION NOMENCLATURE

NEW OR REWORKED CONVEYOR I.D.

XXY-ZZ
- SEQUENTIAL NUMBER OF COMPONENTS IN TRAIN
- SEQUENTIAL NUMBER OF SUBSYSTEMS OF THIS TYPE
- SUBSYSTEM DESCRIPTION IDENTIFIER

SUBSYSTEM DESCRIPTION IDENTIFIERS

AL - ALARM LINE
CL - CLEAR LINE
CS - CURBSIDE
MU - MAKE-UP
OG - OUT OF GAUGE
OS - OVERSIZE
OSR - OSR LINE
RL - RE-INSERT LINE
SS - SECURITY SCREENING
TC - TICKET COUNTER
XO - CROSSOVER

SHEET NUMBER DESIGNATIONS

B2.10
- SEQUENCE DRAWING #
- WORK AREA
- DISCIPLINE DESIGNATOR

REFERENCES – BENCHMARK

DATE	REVISIONS	BY

CONSULTANT'S NAME

mijares ● mora
ARCHITECTS INC.
111 N. FESTIVAL
EL PASO, TEXAS 79912
TEL: 915-542-9981
FAX: 915-542-1594

ARCHITECT'S SEAL

STATE OF TEXAS
ASHER N. DAVID
119023
MAY 31, 2016
LICENSED
PROFESSIONAL ENGINEER

SCALE

DATE	MAY 2016
DESIGN BY	P.C.
DRAWN BY	P.C.
CHKD. BY	C.S.
APPD. BY	J.M.
JOB NO.	201370

PROJECT NAME

EL PASO INTERNATIONAL AIRPORT
CHECKED BAGGAGE INSPECTION SYSTEM

6701 CONVAIR ROAD — EL PASO, TEXAS

EL PASO INTERNATIONAL AIRPORT

CITY OF EL PASO

SHEET TITLE

LEGEND SYMBOLS AND ABBREVIATIONS

B0.01

FILE NO. 238512

SHEET OF

FOR BIDDING & PERMITTING ONLY, NOT FOR CONSTRUCTION PURPOSES.

BHS DRAWING PACKAGE SHEET LIST

SHEET NUMBER	SHEET NAME
B0.00	COVER PAGE
B0.01	LEGEND SYMBOLS AND ABBREVIATIONS
B0.02	SHEET LIST
B0.03	CONVEYOR MANIFEST
B0.04	CONVEYOR MANIFEST
B0.05	ISOMETRIC VIEW
B0.06	SINGLE LINE DIAGRAM
B0.07	TSA ALLOCABLE VS NON-ALLOCABLE
B1.00	EXISTING AIRPORT PLAN - OVERALL - BHS SCOPE OF WORK
B1.01	EXISTING BHS PLAN
B1.02	EXISTING AND DEMO BHS - OVERALL
B1.10	EXISTING AND DEMO BHS - AREA 1
B1.20	EXISTING AND DEMO BHS - AREA 2
B2.00	PROPOSED BHS PLAN - OVERALL
B2.01	PROPOSED BHS PLAN - OVERALL - SUBSYSTEMS
B2.11	PROPOSED BHS PLAN - AREA 1 - LOWER CONVEYORS
B2.12	PROPOSED BHS PLAN - AREA 1 - UPPER CONVEYORS
B2.21	PROPOSED BHS PLAN - AREA 2 - LOWER CONVEYORS
B2.22	PROPOSED BHS PLAN - AREA 2 - UPPER CONVEYORS
B2.30	PROPOSED BHS PLAN - AREA 3
B2.40	PROPOSED BHS PLAN - AREA 4
B3.01	ENLARGED CBIS/CBRA PLAN
B3.02	DETAIL PLAN - ENLARGED CBRA PLAN
B3.03	OSR & BHS CONTROL ROOMS AND EDS REMOVAL PATH
B3.04	TSA IQ POINTS & EGRESS PATH
B3.05	FAIL SAFE REMOVAL POINTS
B3.06	BHS DETAIL PLANS - CBRA - BSD SCREEN SHOTS
B4.01	BHS SECTIONS
B4.02	BHS SECTIONS
B4.03	BHS SECTIONS
B4.04	BHS SECTIONS
B5.00	BHS CATWALK - OVERALL
B5.10	BHS CATWALK - AREA 1
B5.20	BHS CATWALK - AREA 2
B5.30	BHS CATWALK - AREA 3
B5.40	BHS CATWALK - AREA 4
B6.00	PHASING - OVERVIEW - SITE PLAN
B6.01	PHASING OVERVIEW - DEMO
B6.02	BHS PHASING - PHASE 1 - TEMP 1
B6.03	BHS PHASING - PHASE 1 - TEMP 2
B6.04	BHS PHASING - PHASE 1 - TEMP 3
B6.10	BHS PHASING - PHASE 1 - DEMO
B6.20	BHS PHASING - PHASE 2
B6.30	BHS PHASING - PHASE 3
B6.40	BHS PHASING - PHASE 4
B6.50	BHS PHASING - PHASE 5
B7.00	CONTROL STATION DETAILS
B7.01	CONTROL STATION DETAILS
B7.02	SUBSYSTEM E-STOP ZONES AND CONTROLS - OVERVIEW
B7.03	SUBSYSTEM E-STOP ZONES AND CONTROLS - AREA 1 LOWER CONVEYORS
B7.04	SUBSYSTEM E-STOP ZONES AND CONTROLS - AREA 1 UPPER CONVEYORS
B7.05	SUBSYSTEM E-STOP ZONES AND CONTROLS - AREA 2 LOWER CONVEYORS
B7.06	SUBSYSTEM E-STOP ZONES AND CONTROLS - AREA 2 UPPER CONVEYORS
B7.07	SUBSYSTEM E-STOP ZONES AND CONTROLS - AREA 4
B7.08	SUBSYSTEM E-STOP ZONES AND CONTROLS - CBRA & MAKE-UP
B7.10	PROPOSED POWER DISTRIBUTION PLAN
B7.11	PROPOSED MCP PLAN - PDP 1
B7.12	PROPOSED MCP PLAN - PDP 2
B7.13	PROPOSED MCP PLAN - PDP 3
B7.14	PROPOSED MCP PLAN - PDP 4
B8.00	LOADING DETAILS
B8.01	LOADING DETAILS
B8.02	ATTACHMENT DETAILS
B8.03	SUPPORT DETAILS
B8.04	SUPPORT DETAILS
B8.05	SUPPORT DETAILS
B8.06	FIRE/SECURITY DOOR DETAILS
B8.07	FIRE/SECURITY DOOR DETAILS
B8.08	LADDER DETAILS
B8.09	CROSS OVER AND SAFETY GATE DETAILS
B8.10	IMPACT PROTECTION & SLIDE DETAILS
B8.11	SAFETY SIGNAGE
B8.12	SAFETY SIGNAGE
B8.13.	TYPICAL HIGH SPEED DIVERTER
B8.14	TICKETING CONVEYOR DETAILS
B8.15	CONVEYOR TOP HAT DETAILS

REFERENCES – BENCHMARK

DATE	REVISIONS	BY

CONSULTANT'S NAME

mijares ● mora
ARCHITECTS INC.
111 N. FESTIVAL
EL PASO, TEXAS 79912
TELEPHONE: 915-542-1989
FAX: 915-542-1994

ARCHITECT'S SEAL

STATE OF TEXAS
ASHER N. DAVID
119923
MAY 31, 2016
LICENSED
PROFESSIONAL ENGINEER

SCALE

DATE	MAY 2016
DESIGN BY	P.C.
DRAWN BY	P.C.
CHKD. BY	C.S.
APPD. BY	J.M.
JOB NO.	201370

PROJECT NAME

EL PASO INTERNATIONAL AIRPORT
CHECKED BAGGAGE INSPECTION SYSTEM

6701 CONVAIR ROAD EL PASO, TEXAS

EL PASO INTERNATIONAL AIRPORT

CITY OF EL PASO

SHEET TITLE

SHEET LIST

B0.02

FILE NO. 238512

SHEET OF

FOR BIDDING & PERMITTING ONLY, NOT FOR CONSTRUCTION PURPOSES.

CBIS AREA

CBRA AREA

CONVEYOR MANIFEST - AL1

NEW ID	Family	CONVEYOR LENGTH	ANGLE	BELT SPEED	FLA	HP	CONDITION
AL1-01	Conveyor - Transport	17' - 8"		150.0 ft/min	2 A	1 hp	
AL1-02	Conveyor - Transport	33' - 5"		150.0 ft/min	3 A	2 hp	
AL1-03	Conveyor - Transport	17' - 11"		150.0 ft/min	2 A	1 hp	
AL1-04	Conveyor - Transport	4' - 0"		120.0 ft/min	2 A	1 hp	
AL1-05	Conveyor - Transport	4' - 0"		120.0 ft/min	2 A	1 hp	
AL1-06	Conveyor - Transport	4' - 0"		120.0 ft/min	2 A	1 hp	
AL1-07	Conveyor - Transport	4' - 0"		120.0 ft/min	2 A	1 hp	
AL1-08	Conveyor - Transport	4' - 0"		120.0 ft/min	2 A	1 hp	
AL1-09	Conveyor - Transport	4' - 0"		120.0 ft/min	2 A	1 hp	
AL1-10	Conveyor - Transport	4' - 0"		120.0 ft/min	2 A	1 hp	
AL1-11	Conveyor - Transport	4' - 0"		120.0 ft/min	2 A	1 hp	
AL1-12	Conveyor - Transport	4' - 0"		90.0 ft/min	2 A	1 hp	
AL1-13	Conveyor - Transport	4' - 0"		90.0 ft/min	2 A	1 hp	
AL1-14	Conveyor - Transport	4' - 0"		90.0 ft/min	2 A	1 hp	
AL1-15	Conveyor - Transport	4' - 0"		90.0 ft/min	2 A	1 hp	
AL1-16	Conveyor - Transport	4' - 0"		90.0 ft/min	2 A	1 hp	
AL1-17	Conveyor - Transport	4' - 0"		90.0 ft/min	2 A	1 hp	
AL1-18	Conveyor - Transport	4' - 0"		90.0 ft/min	2 A	1 hp	
AL1-19	Conveyor - Transport	4' - 0"		90.0 ft/min	2 A	1 hp	
AL1-20	Conveyor - Transport	4' - 1"		90.0 ft/min	2 A	1 hp	
Grand total: 20		137' - 0"			43 A		

TOTAL FLA (TOTAL + 15A Transformer):	58 FLA

CBIS AREA

CONVEYOR MANIFEST - AL2

NEW ID	Family	CONVEYOR LENGTH	ANGLE	BELT SPEED	FLA	HP	CONDITION
AL2-01	Conveyor - Transport	4' - 0"		180.0 ft/min	2 A	1 hp	
AL2-02	Conveyor - Incline	4' - 0"	5°	180.0 ft/min	2 A	1 hp	
AL2-03	Conveyor - Power Turn	9' - 0"		180.0 ft/min	3 A	2 hp	
AL2-05	Conveyor - Power Turn	4' - 6"		180.0 ft/min	3 A	2 hp	
AL2-06	Conveyor - Transport	3' - 6"		180.0 ft/min	2 A	1 hp	
AL2-04	Conveyor - Incline	12' - 11"	4°	180.0 ft/min	2 A	1 hp	
AL2-07	Conveyor - Merge (Cuttable)	6' - 3"		180.0 ft/min	5 A	3 hp	
Grand total: 7		44' - 3"			20 A		

TOTAL FLA (TOTAL + 15A Transformer):	35 FLA

CBIS AREA

CONVEYOR MANIFEST - CL1

NEW ID	Family	CONVEYOR LENGTH	ANGLE	BELT SPEED	FLA	HP	CONDITION
CL1-01	Conveyor - Breakover	15' - 11"	12°	120.0 ft/min	2 A	1 hp	
CL1-02	Conveyor - Transport	14' - 0"		150.0 ft/min	2 A	1 hp	
CL1-03	Conveyor - Transport	12' - 3"		150.0 ft/min	2 A	1 hp	
CL1-04	Conveyor - Transport	17' - 2"		180.0 ft/min	2 A	1 hp	
CL1-05	Conveyor - Breakover	28' - 2"	15°	180.0 ft/min	3 A	2 hp	
CL1-06	Conveyor - Power Turn	9' - 0"		180.0 ft/min	3 A	2 hp	
CL1-07	Conveyor - Breakover	9' - 8"	18°	180.0 ft/min	2 A	1 hp	
CL1-08	Conveyor - Transport	14' - 11"		180.0 ft/min	2 A	1 hp	
Grand total: 8		121' - 2"			19 A		

TOTAL FLA (TOTAL + 15A Transformer):	34 FLA

CBIS AREA

CONVEYOR MANIFEST - CL2

NEW ID	Family	CONVEYOR LENGTH	ANGLE	BELT SPEED	FLA	HP	CONDITION
CL2-01	Conveyor - Breakover	9' - 9"	15°	120.0 ft/min	2 A	1 hp	
CL2-03	Conveyor - Power Turn	4' - 6"		150.0 ft/min	3 A	2 hp	
CL2-02	Conveyor - Transport	4' - 11"		180.0 ft/min	2 A	1 hp	
CL2-04	Conveyor - Transport	5' - 3"		180.0 ft/min	2 A	1 hp	
CL2-05	Conveyor - Merge (Cuttable)	6' - 3"		180.0 ft/min	5 A	3 hp	
Grand total: 5		30' - 8"			15 A		

TOTAL FLA (TOTAL + 15A Transformer):	30 FLA

CBIS AREA

CONVEYOR MANIFEST - CL3

NEW ID	Family	CONVEYOR LENGTH	ANGLE	BELT SPEED	FLA	HP	CONDITION
CL3-01	Conveyor - Breakover	10' - 7"	15°	120.0 ft/min	2 A	1 hp	
CL3-02	Conveyor - Power Turn	4' - 6"		150.0 ft/min	3 A	2 hp	
CL3-03	Conveyor - Transport	15' - 0"		180.0 ft/min	2 A	1 hp	
CL3-04	Conveyor - Transport	4' - 0"		180.0 ft/min	2 A	1 hp	
CL3-05	Conveyor - Transport	4' - 0"		180.0 ft/min	2 A	1 hp	
CL3-06	Conveyor - Merge (Cuttable)	6' - 3"		180.0 ft/min	5 A	3 hp	
Grand total: 6		44' - 5"			17 A		

TOTAL FLA (TOTAL + 15A Transformer):	32 FLA

CBRA AREA

CONVEYOR MANIFEST - CL4

NEW ID	Family	CONVEYOR LENGTH	ANGLE	BELT SPEED	FLA	HP	CONDITION
CL4-01	Conveyor - Breakover	10' - 7"	15°	180.0 ft/min	2 A	1 hp	
CL4-02	Conveyor - Transport	4' - 0"		180.0 ft/min	2 A	1 hp	
CL4-03	Conveyor - Transport	4' - 0"		180.0 ft/min	2 A	1 hp	
CL4-04	Conveyor - Power Turn	9' - 0"		180.0 ft/min	3 A	2 hp	
CL4-05	Conveyor - Power Turn	4' - 6"		180.0 ft/min	3 A	2 hp	
CL4-06	Conveyor - Merge (Cuttable)	6' - 3"		210.0 ft/min	5 A	3 hp	
Grand total: 6		38' - 4"			18 A		

TOTAL FLA (TOTAL + 15A Transformer):	33 FLA

CBIS AREA

CONVEYOR MANIFEST - CL5

NEW ID	Family	CONVEYOR LENGTH	ANGLE	BELT SPEED	FLA	HP	CONDITION
CL5-01	Conveyor - Transport	35' - 0"		90.0 ft/min	3 A	2 hp	
CL5-02	Conveyor - Transport	30' - 7"		90.0 ft/min	3 A	2 hp	
CL5-03	Conveyor - Power Spiral Incline	9' - 3"	12°	120.0 ft/min	3 A	2 hp	
CL5-04	Conveyor - Breakover	29' - 4"	15°	150.0 ft/min	5 A	3 hp	
CL5-05	Conveyor - Transport	4' - 0"		180.0 ft/min	2 A	1 hp	
CL5-06	Conveyor - Transport	4' - 0"		180.0 ft/min	2 A	1 hp	
CL5-07	Conveyor - Power Turn	4' - 6"		180.0 ft/min	3 A	2 hp	
CL5-08	Conveyor - Merge (Cuttable)	6' - 3"		180.0 ft/min	5 A	3 hp	
Grand total: 8		123' - 0"			27 A		

TOTAL FLA (TOTAL + 15A Transformer):	31 FLA

CONVEYOR MANIFEST - MF1

NEW ID	Family	CONVEYOR LENGTH	ANGLE	BELT SPEED	FLA	HP	CONDITION
MF1-01	Conveyor - Power Turn	9' - 0"		180.0 ft/min	3 A	2 hp	
MF1-02	Conveyor - Breakover	15' - 0"	18°	180.0 ft/min	2 A	1 hp	
MF1-03	Tip Chute						
Grand total: 3		24' - 0"			6 A		

TOTAL FLA (TOTAL + 15A Transformer):	21 FLA

CONVEYOR MANIFEST - MF2

NEW ID	Family	CONVEYOR LENGTH	ANGLE	BELT SPEED	FLA	HP	CONDITION
MF2-HSD	Diverter - HSPD (Cuttable)				3 A	2 hp	
MF2-01	Conveyor - Breakover	19' - 7"	18°	180.0 ft/min	2 A	1 hp	
MF2-02	Tip Chute						
Grand total: 3		19' - 7"			6 A		

TOTAL FLA (TOTAL + 15A Transformer):	21 FLA

CONVEYOR MANIFEST - MF3

NEW ID	Family	CONVEYOR LENGTH	ANGLE	BELT SPEED	FLA	HP	CONDITION
MF3-HSD	Diverter - HSPD (Cuttable)				3 A	2 hp	
MF3-01	Conveyor - Breakover	18' - 6"	18°	180.0 ft/min	2 A	1 hp	
MF3-02	Tip Chute						
Grand total: 3		18' - 6"			6 A		

TOTAL FLA (TOTAL + 15A Transformer):	21 FLA

CONVEYOR MANIFEST - MF4

NEW ID	Family	CONVEYOR LENGTH	ANGLE	BELT SPEED	FLA	HP	CONDITION
MF4-HSD	Diverter - HSPD (Cuttable)				3 A	2 hp	
MF4-01	Conveyor - Breakover	18' - 6"	18°	180.0 ft/min	2 A	1 hp	
MF4-02	Tip Chute						
Grand total: 3		18' - 6"			6 A		

TOTAL FLA (TOTAL + 15A Transformer):	21 FLA

CONVEYOR MANIFEST - ML1

NEW ID	Family	CONVEYOR LENGTH	ANGLE	BELT SPEED	FLA	HP	CONDITION
ML1-01	Conveyor - Transport	9' - 9"		180.0 ft/min	2 A	1 hp	
ML1-02	Conveyor - Transport	4' - 0"		180.0 ft/min	2 A	1 hp	
ML1-03	Conveyor - Transport	4' - 0"		180.0 ft/min	2 A	1 hp	
ML1-04	Conveyor - Transport	22' - 9"		180.0 ft/min	3 A	2 hp	
ML1-05	Conveyor - Transport	27' - 0"		180.0 ft/min	3 A	2 hp	
ML1-06	Conveyor - Breakover	8' - 7"	18°	180.0 ft/min	2 A	1 hp	
ML1-07	Conveyor - Transport	25' - 8"		180.0 ft/min	3 A	2 hp	
ML1-07	Conveyor - Transport	20' - 1"		180.0 ft/min	3 A	2 hp	
ML1-08	Conveyor - Decline	12' - 1"	6°	180.0 ft/min	2 A	1 hp	
ML1-09	Conveyor - Transport	4' - 0"		180.0 ft/min	2 A	1 hp	
ML1-10	Conveyor - Transport	4' - 0"		180.0 ft/min	2 A	1 hp	
ML1-11	Conveyor - Transport	31' - 2"		180.0 ft/min	3 A	2 hp	
ML1-12	Conveyor - Transport	19' - 0"		180.0 ft/min	2 A	1 hp	
ML1-13	Conveyor - Breakover	21' - 8"	15°	180.0 ft/min	2 A	1 hp	
ML1-14	Conveyor - Transport	15' - 10"		180.0 ft/min	2 A	1 hp	
Grand total: 15		229' - 7"			38 A		

TOTAL FLA (TOTAL + 15A Transformer):	53 FLA

CONVEYOR MANIFEST - MAKE UP DEVICE

NEW ID	EQUIPMENT TYPE	CONVEYOR LENGTH	MOTOR COUNT	DEVICE SPEED	FLA	CONDITION
MU1	FLAT PLATE CAROUSEL	132' - 5"	2	90.0 ft/min	22 A	
MU2	FLAT PLATE CAROUSEL	132' - 5"	2	90.0 ft/min	22 A	
MU3	FLAT PLATE CAROUSEL	132' - 5"	2	90.0 ft/min	22 A	
MU4	FLAT PLATE CAROUSEL	132' - 5"	2	90.0 ft/min	22 A	
Grand total: 32		529' - 10"	8		88 A	

TOTAL FLA (TOTAL + 15A Transformer):	103 FLA

CBIS AREA

CONVEYOR MANIFEST - OG1

NEW ID	Family	CONVEYOR LENGTH	ANGLE	BELT SPEED	FLA	HP	CONDITION
OG1-HSD	Diverter - HSPD (Cuttable)				3 A	2 hp	
OG1-01	Conveyor - Transport	5' - 0"		210.0 ft/min	2 A	1 hp	
OG1-02	Conveyor - Decline	35' - 0"	1°	180.0 ft/min	3 A	2 hp	
OG1-03	Conveyor - Transport	35' - 0"		180.0 ft/min	3 A	2 hp	
OG1-04	Conveyor - Transport	16' - 11"		180.0 ft/min	2 A	1 hp	
OG1-05	Conveyor - Power Turn	3' - 0"		180.0 ft/min	3 A	2 hp	
OG1-06	Conveyor - Transport	21' - 6"		180.0 ft/min	3 A	2 hp	
OG1-07	Conveyor - Power Turn	3' - 0"		180.0 ft/min	3 A	2 hp	
Grand total: 8		119' - 5"			25 A		

TOTAL FLA (TOTAL + 15A Transformer):	40 FLA

CBIS AREA

CONVEYOR MANIFEST - OS1

NEW ID	Family	CONVEYOR LENGTH	ANGLE	BELT SPEED	FLA	HP	CONDITION
OS1-01	Conveyor - Transport	5' - 0"		90.0 ft/min	2 A	1 hp	
OS1-02	Conveyor - Transport	6' - 5"		90.0 ft/min	2 A	1 hp	
OS1-03	Conveyor - Power Turn	4' - 6"		120.0 ft/min	3 A	2 hp	
OS1-04	Conveyor - Transport	26' - 7"		90.0 ft/min	3 A	2 hp	
OS1-05	Conveyor - Power Turn	4' - 6"		120.0 ft/min	3 A	2 hp	
OS1-06	Conveyor - Transport	29' - 4"		90.0 ft/min	3 A	2 hp	
OS1-07	Conveyor - Power Turn	9' - 0"		120.0 ft/min	3 A	2 hp	
OS1-08	Conveyor - Transport	32' - 0"		150.0 ft/min	3 A	2 hp	
OS1-09	Conveyor - Transport	33' - 8"		180.0 ft/min	3 A	2 hp	
OS1-10	Conveyor - Transport	8' - 1"		180.0 ft/min	2 A	1 hp	
Grand total: 10		159' - 1"			30 A		

TOTAL FLA (TOTAL + 15A Transformer):	45 FLA

CBIS AREA

CONVEYOR MANIFEST - OSR1

NEW ID	Family	CONVEYOR LENGTH	ANGLE	BELT SPEED	FLA	HP	CONDITION
OSR1-01	Conveyor - Transport	20' - 5"		120.0 ft/min	2 A	1 hp	
OSR1-02	Conveyor - Transport	19' - 5"		150.0 ft/min	2 A	1 hp	
OSR1-03	Conveyor - Incline	38' - 1"	1°	180.0 ft/min	3 A	2 hp	
OSR1-04	Conveyor - Power Spiral Incline	9' - 1"	6°	180.0 ft/min	3 A	2 hp	
OSR1-05	Conveyor - Incline	4' - 6"	6°	180.0 ft/min	2 A	1 hp	
OSR1-06	Conveyor - Power Turn	9' - 0"		180.0 ft/min	3 A	2 hp	
OSR1-07	Conveyor - Transport	4' - 0"		180.0 ft/min	2 A	1 hp	
OSR1-08	Diverter - VSU	10' - 0"		180.0 ft/min	11 A	6 hp	
Grand total: 8		114' - 6"			30 A		

TOTAL FLA (TOTAL + 15A Transformer):	31 FLA

CBIS AREA

CONVEYOR MANIFEST - OSR2

NEW ID	Family	CONVEYOR LENGTH	ANGLE	BELT SPEED	FLA	HP	CONDITION
OSR2-01	Conveyor - Transport	10' - 6"		120.0 ft/min	2 A	1 hp	
OSR2-03	Conveyor - Power Turn	4' - 6"		150.0 ft/min	3 A	2 hp	
OSR2-02	Conveyor - Transport	4' - 0"		180.0 ft/min	2 A	1 hp	
OSR2-04	Conveyor - Transport	5' - 3"		180.0 ft/min	2 A	1 hp	
OSR2-05	Conveyor - Merge (Cuttable)	6' - 3"		180.0 ft/min	5 A	3 hp	
Grand total: 5		30' - 6"			15 A		

TOTAL FLA (TOTAL + 15A Transformer):	30 FLA

CBIS AREA

CONVEYOR MANIFEST - OSR3 (3EDS)

NEW ID	Family	CONVEYOR LENGTH	ANGLE	BELT SPEED	FLA	HP	CONDITION
OSR3-01	Conveyor - Transport	10' - 5"		120.0 ft/min	2 A	1 hp	
OSR3-02	Conveyor - Power Turn	4' - 6"		150.0 ft/min	3 A	2 hp	
OSR3-03	Conveyor - Incline	3' - 9"	3°	180.0 ft/min	2 A	1 hp	
OSR3-05	Conveyor - Transport	4' - 0"		180.0 ft/min	2 A	1 hp	
OSR3-04	Conveyor - Transport	10' - 8"		180.0 ft/min	2 A	1 hp	
OSR3-06	Conveyor - Transport	4' - 0"		180.0 ft/min	2 A	1 hp	
OSR3-07	Conveyor - Merge (Cuttable)	6' - 3"		180.0 ft/min	5 A	3 hp	
Grand total: 7		43' - 6"			19 A		

TOTAL FLA (TOTAL + 15A Transformer):	25 FLA

GENERAL NOTES: CONVEYOR MANIFEST

1. ALL SPEEDS ARE LISTED FOR REFERENCE ONLY. BHS CONTRACTOR IS TO VERIFY AND ENSURE ALL CONVEYOR SPEEDS MAXIMIZE SYSTEM THROUGHPUT AND MINIMIZE BAG-IN-SYSTEM TIME.

2. QUEUES UPSTREAM OF EDS DEVICES WILL UTILIZE VFD'S AND OPERATE ON DUAL SPEEDS AS REQUIRED TO MAINTAIN AND MAZIMIZE THROUGHPUT OF MACHINES.

CONVEYOR MANIFEST NOTE - HVAC AREAS

CBIS - INDICATES THE CONVEYORS FOUND IN THE CHECKED BAGGAGE INSPECTION SYSTEM AREA (CBIS) - FOR HVAC ONLY

CBRA - INDICATES THE CONVEYORS FOUND IN THE CHECKED BAGGAGE RESOLUTION AREA (CBRA) - FOR HVAC ONLY

DRAFT - NOT FOR CONSTRUCTION

FOR BIDDING & PERMITTING ONLY, NOT FOR CONSTRUCTION PURPOSES.

REFERENCES – BENCHMARK

DATE	REVISIONS	BY

CONSULTANT'S NAME

mijares ● mora
ARCHITECTS INC.
111 N. FESTIVAL
EL PASO, TEXAS 79912
TEL: 915-542-1989
FAX: 915-542-1994

ARCHITECT'S SEAL

STATE OF TEXAS
ASHER N. DAVID
119023
MAY 31, 2016
LICENSED
PROFESSIONAL ENGINEER

SCALE

DATE	MAY 2016
DESIGN BY	P.C.
DRAWN BY	P.C.
CHKD. BY	C.S.
APPD. BY	J.M.
JOB NO.	201370

PROJECT NAME

EL PASO INTERNATIONAL AIRPORT
CHECKED BAGGAGE INSPECTION SYSTEM

6701 CONVAIR ROAD EL PASO, TEXAS

EL PASO INTERNATIONAL AIRPORT

CITY OF EL PASO

SHEET TITLE

CONVEYOR MANIFEST

B0.03

FILE NO. 238512

SHEET OF

CBRA AREA

CONVEYOR MANIFEST - RI1

NEW ID	Family	CONVEYOR LENGTH	ANGLE	BELT SPEED	FLA	HP	CONDITION
RI1-01	Conveyor - Incline	4' - 1"	14°	90.0 ft/min	2 A	1 hp	
RI1-02	Conveyor - Power Spiral Incline	9' - 3"	12°	120.0 ft/min	3 A	2 hp	
RI1-03	Conveyor - Incline	8' - 7"	2°	150.0 ft/min	2 A	1 hp	
RI1-04	Conveyor - Power Spiral Incline	9' - 3"	12°	180.0 ft/min	3 A	2 hp	
RI1-05	Conveyor - Breakover	39' - 0"	15°	180.0 ft/min	5 A	3 hp	
RI1-06	Conveyor - Transport	12' - 11"		180.0 ft/min	2 A	1 hp	
RI1-07	Conveyor - Power Turn	4' - 6"		180.0 ft/min	3 A	2 hp	
RI1-08	Conveyor - Transport	13' - 8"		180.0 ft/min	2 A	1 hp	
RI1-09	Conveyor - Transport	4' - 0"		180.0 ft/min	2 A	1 hp	
RI1-10	Conveyor - Transport	4' - 0"		180.0 ft/min	2 A	1 hp	
RI1-11	Conveyor - Merge (Cuttable)	6' - 3"		210.0 ft/min	5 A	3 hp	
Grand total: 11		115' - 8"			32 A		

TOTAL FLA (TOTAL + 15A Transformer):	43 FLA

CBIS AREA

CONVEYOR MANIFEST - SF1

NEW ID	Family	CONVEYOR LENGTH	ANGLE	BELT SPEED	FLA	HP	CONDITION
SF1-01	Conveyor - Transport	3' - 6"		180.0 ft/min	2 A	1 hp	
SF1-02	Conveyor - Transport	3' - 6"		180.0 ft/min	2 A	1 hp	
SS1-ATR	Scanner - ATR						
SF1-03	Conveyor - Transport	3' - 6"		180.0 ft/min	2 A	1 hp	
SF1-04	Conveyor - Transport	19' - 6"		180.0 ft/min	2 A	1 hp	
SF1-05	Conveyor - Power Turn	9' - 0"		180.0 ft/min	3 A	2 hp	
SF1-06	Conveyor - Transport	15' - 0"		180.0 ft/min	2 A	1 hp	
SF1-07	Conveyor - Transport	12' - 0"		180.0 ft/min	2 A	1 hp	
SF1-08	Conveyor - Transport	12' - 0"		180.0 ft/min	2 A	1 hp	
Grand total: 9		78' - 1"			18 A		

TOTAL FLA (TOTAL + 15A Transformer):	33 FLA

CONVEYOR MANIFEST - SL1

NEW ID	Family	CONVEYOR LENGTH	ANGLE	BELT SPEED	FLA	HP	CONDITION
SL1-01	Conveyor - Transport	3' - 6"		180.0 ft/min	2 A	1 hp	
SL1-02	Conveyor - Transport	3' - 6"		180.0 ft/min	2 A	1 hp	
SL1-ATR	Scanner - ATR						
SL1-03	Conveyor - Transport	3' - 6"		180.0 ft/min	2 A	1 hp	
SL1-04	Conveyor - Transport	3' - 6"		180.0 ft/min	2 A	1 hp	
SL1-05	Conveyor - Power Turn	9' - 0"		180.0 ft/min	3 A	2 hp	
SL1-06	Conveyor - Transport	34' - 2"		180.0 ft/min	3 A	2 hp	
SL1-07	Conveyor - Transport	40' - 2"		180.0 ft/min	5 A	3 hp	
SL1-08	Conveyor - Transport	35' - 0"		180.0 ft/min	3 A	2 hp	
SL1-09	Conveyor - Transport	19' - 4"		180.0 ft/min	2 A	1 hp	
Grand total: 10		151' - 8"			26 A		

TOTAL FLA (TOTAL + 15A Transformer):	40 FLA

CBIS AREA

CONVEYOR MANIFEST - SS1

NEW ID	Family	CONVEYOR LENGTH	ANGLE	BELT SPEED	FLA	HP	CONDITION
SS1-01	Conveyor - Power Turn	9' - 0"		180.0 ft/min	3 A	2 hp	
SS1-02	Conveyor - Decline	5' - 6"	3°	180.0 ft/min	2 A	1 hp	
SS1-03	Conveyor - Transport	4' - 0"		150.0 ft/min	2 A	1 hp	
SS1-04	Conveyor - Transport	4' - 0"		150.0 ft/min	2 A	1 hp	
SS1-05	Conveyor - Transport	4' - 0"		120.0 ft/min	2 A	1 hp	
SS1-06	Conveyor - Transport	4' - 0"		90.0 ft/min	2 A	1 hp	
SS1-07	Conveyor - Transport	4' - 0"		60.0 ft/min	2 A	1 hp	
SS1-08	Conveyor - Transport	4' - 0"		40.0 ft/min	2 A	1 hp	DUAL SPEED (40/60 FPM)
SS1-09	Conveyor - Transport	4' - 0"		40.0 ft/min	2 A	1 hp	
SS1-10	SS - L3 Examiner 3DX 6000			40.2 ft/min			
SS1-11	Conveyor - Transport	4' - 0"		40.0 ft/min	2 A	1 hp	
SS1-12	Conveyor - Transport	4' - 0"		40.0 ft/min	2 A	1 hp	
SS1-13	Conveyor - Transport	4' - 0"		60.0 ft/min	2 A	1 hp	
SS1-14	Conveyor - Incline	4' - 0"	4°	90.0 ft/min	2 A	1 hp	
SS1-15	Diverter - VSU	10' - 0"		120.0 ft/min	11 A	6 hp	
Grand total: 15		68' - 6"			40 A		

TOTAL FLA (TOTAL + 15A Transformer):	55 FLA

CBIS AREA

CONVEYOR MANIFEST - SS2 (3EDS)

NEW ID	Family	CONVEYOR LENGTH	ANGLE	BELT SPEED	FLA	HP	CONDITION
SS2-HSD	Diverter - HSPD (Cuttable)				3 A	2 hp	
SS2-01	Conveyor - Transport	5' - 0"		210.0 ft/min	2 A	1 hp	
SS2-02	Conveyor - Decline	4' - 0"	1°	180.0 ft/min	2 A	1 hp	
SS2-03	Conveyor - Transport	4' - 0"		180.0 ft/min	2 A	1 hp	
SS2-04	Conveyor - Transport	4' - 0"		150.0 ft/min	2 A	1 hp	
SS2-05	Conveyor - Transport	4' - 0"		120.0 ft/min	2 A	1 hp	
SS2-06	Conveyor - Transport	4' - 0"		90.0 ft/min	2 A	1 hp	
SS2-07	Conveyor - Transport	4' - 0"		60.0 ft/min	2 A	1 hp	DUAL SPEED (40/60 FPM)
SS2-08	Conveyor - Transport	4' - 0"		40.0 ft/min	2 A	1 hp	
SS2-10	SS - L3 Examiner 3DX 6000			40.2 ft/min			
SS2-11	Conveyor - Transport	4' - 0"		40.0 ft/min	2 A	1 hp	
SS2-12	Conveyor - Transport	4' - 0"		40.0 ft/min	2 A	1 hp	
SS2-13	Conveyor - Transport	4' - 0"		60.0 ft/min	2 A	1 hp	
SS2-14	Conveyor - Incline	4' - 0"	4°	90.0 ft/min	2 A	1 hp	
SS2-15	Diverter - VSU	10' - 0"		120.0 ft/min	11 A	6 hp	
Grand total: 15		59' - 0"			40 A		

TOTAL FLA (TOTAL + 15A Transformer):	55 FLA

CBIS AREA

CONVEYOR MANIFEST - SS3 (3EDS)

NEW ID	Family	CONVEYOR LENGTH	ANGLE	BELT SPEED	FLA	HP	CONDITION
SS3-HSD	Diverter - HSPD (Cuttable)				3 A	2 hp	
SS3-01	Conveyor - Transport	5' - 0"		210.0 ft/min	2 A	1 hp	
SS3-02	Conveyor - Decline	4' - 0"	1°	180.0 ft/min	2 A	1 hp	
SS3-03	Conveyor - Transport	4' - 0"		180.0 ft/min	2 A	1 hp	
SS3-04	Conveyor - Transport	4' - 0"		150.0 ft/min	2 A	1 hp	
SS3-05	Conveyor - Transport	4' - 0"		120.0 ft/min	2 A	1 hp	
SS3-06	Conveyor - Transport	4' - 0"		90.0 ft/min	2 A	1 hp	
SS3-07	Conveyor - Transport	4' - 0"		60.0 ft/min	2 A	1 hp	
SS3-08	Conveyor - Transport	4' - 0"		40.0 ft/min	2 A	1 hp	DUAL SPEED (40/60 FPM)
SS3-09	Conveyor - Transport	4' - 0"		40.0 ft/min	2 A	1 hp	
SS3-10	SS - L3 Examiner 3DX 6000			40.2 ft/min			
SS3-11	Conveyor - Transport	4' - 0"		40.0 ft/min	2 A	1 hp	
SS3-12	Conveyor - Transport	4' - 0"		40.0 ft/min	2 A	1 hp	
SS3-13	Conveyor - Transport	4' - 0"		60.0 ft/min	2 A	1 hp	
SS3-14	Conveyor - Incline	4' - 0"	4°	90.0 ft/min	2 A	1 hp	
SS3-15	Diverter - VSU	10' - 0"		120.0 ft/min	11 A	6 hp	
Grand total: 16		63' - 0"			42 A		

TOTAL FLA (TOTAL + 15A Transformer):	57 FLA

CONVEYOR MANIFEST - TC1

NEW ID	Family	CONVEYOR LENGTH	ANGLE	BELT SPEED	FLA	HP	CONDITION
TC1-01	Conveyor - Check-in	30' - 0"		90.0 ft/min	3 A	2 hp	
TC1-02	Conveyor - Check-in	24' - 9"		90.0 ft/min	3 A	2 hp	
TC1-03	Conveyor - Power Turn	9' - 0"		120.0 ft/min	3 A	2 hp	
TC1-04	Conveyor - Incline	11' - 3"	15°	150.0 ft/min	2 A	1 hp	
TC1-05	Conveyor - Power Spiral Incline	9' - 3"	12°	180.0 ft/min	3 A	2 hp	
TC1-06	Conveyor - Breakover	14' - 3"	18°	180.0 ft/min	3 A	2 hp	
TC1-07	Conveyor - Power Turn	4' - 6"		120.0 ft/min	3 A	2 hp	
TC1-08	Conveyor - Decline	25' - 6"	2°	180.0 ft/min	3 A	2 hp	
TC1-09	Conveyor - Power Turn	4' - 6"		120.0 ft/min	3 A	2 hp	
Grand total: 9		133' - 2"			29 A		

TOTAL FLA (TOTAL + 15A Transformer):	44 FLA

CONVEYOR MANIFEST - TC2

NEW ID	Family	CONVEYOR LENGTH	ANGLE	BELT SPEED	FLA	HP	CONDITION
TC2-01	Conveyor - Check-in	17' - 2"		90.0 ft/min	3 A	2 hp	
TC2-02	Conveyor - Power Turn	9' - 0"		120.0 ft/min	3 A	2 hp	
TC2-03	Conveyor - Incline	21' - 0"	15°	150.0 ft/min	3 A	2 hp	
TC2-04	Conveyor - Power Spiral Incline	4' - 8"	12°	180.0 ft/min	3 A	2 hp	
TC2-05	Conveyor - Incline	3' - 9"	8°	180.0 ft/min	2 A	1 hp	
TC2-06	Conveyor - Incline	3' - 6"	4°	180.0 ft/min	2 A	1 hp	
TC2-07	Conveyor - Transport	3' - 6"		180.0 ft/min	2 A	1 hp	
TC2-08	Conveyor - Merge (Cuttable)	6' - 3"		210.0 ft/min	5 A	3 hp	
Grand total: 8		68' - 10"			25 A		

TOTAL FLA (TOTAL + 15A Transformer):	40 FLA

CONVEYOR MANIFEST - TC3

NEW ID	Family	CONVEYOR LENGTH	ANGLE	BELT SPEED	FLA	HP	CONDITION
TC3-01	Conveyor - Check-in	24' - 0"		90.0 ft/min	3 A	2 hp	
TC3-02	Conveyor - Check-in	27' - 11"		90.0 ft/min	3 A	2 hp	
TC3-03	Conveyor - Power Turn	9' - 0"		120.0 ft/min	3 A	2 hp	
TC3-04	Conveyor - Incline	16' - 6"	16°	150.0 ft/min	3 A	2 hp	
TC3-05	Conveyor - Power Spiral Incline	4' - 8"	12°	180.0 ft/min	3 A	2 hp	
TC3-06	Conveyor - Incline	12' - 2"	2°	180.0 ft/min	2 A	1 hp	
TC3-07	Conveyor - Power Spiral Incline	4' - 8"	12°	180.0 ft/min	3 A	2 hp	
TC3-08	Conveyor - Incline	4' - 0"	6°	180.0 ft/min	2 A	1 hp	
TC3-09	Conveyor - Transport	4' - 0"		180.0 ft/min	2 A	1 hp	
TC3-10	Conveyor - Power Turn	4' - 6"		180.0 ft/min	3 A	2 hp	
TC3-11	Conveyor - Merge (Cuttable)	6' - 3"		210.0 ft/min	5 A	3 hp	
Grand total: 11		117' - 7"			35 A		

TOTAL FLA (TOTAL + 15A Transformer):	52 FLA

CONVEYOR MANIFEST - TC4

NEW ID	Family	CONVEYOR LENGTH	ANGLE	BELT SPEED	FLA	HP	CONDITION
TC4-01	Conveyor - Check-in	30' - 0"		90.0 ft/min	3 A	2 hp	
TC4-02	Conveyor - Check-in	28' - 7"		90.0 ft/min	3 A	2 hp	
TC4-03	Conveyor - Power Turn	9' - 0"		120.0 ft/min	3 A	2 hp	
TC4-04	Conveyor - Incline	19' - 4"	15°	150.0 ft/min	3 A	2 hp	
TC4-05	Conveyor - Incline	4' - 1"	11°	180.0 ft/min	2 A	1 hp	
TC4-07	Conveyor - Incline	3' - 6"	4°	180.0 ft/min	2 A	1 hp	
TC4-09	Conveyor - Merge (Cuttable)	6' - 3"		210.0 ft/min	5 A	3 hp	
Grand total: 7		100' - 10"			23 A		

TOTAL FLA (TOTAL + 15A Transformer):	38 FLA

CONVEYOR MANIFEST - TC5

NEW ID	Family	CONVEYOR LENGTH	ANGLE	BELT SPEED	FLA	HP	CONDITION
TC5-01	Conveyor - Check-in	31' - 8"		90.0 ft/min	3 A	2 hp	
TC5-02	Conveyor - Check-in	33' - 6"		90.0 ft/min	5 A	3 hp	
TC5-03	Conveyor - Power Turn	9' - 0"		120.0 ft/min	3 A	2 hp	
TC5-04	Conveyor - Incline	14' - 5"	15°	150.0 ft/min	3 A	2 hp	
TC5-05	Conveyor - Power Spiral Incline	4' - 8"	12°	180.0 ft/min	3 A	2 hp	
TC5-06	Conveyor - Incline	7' - 9"	13°	180.0 ft/min	2 A	1 hp	
TC5-06	Conveyor - Power Spiral Incline	4' - 8"	12°	180.0 ft/min	3 A	2 hp	
TC5-07	Conveyor - Incline	4' - 0"	6°	180.0 ft/min	2 A	1 hp	
TC5-08	Conveyor - Incline	4' - 0"	4°	180.0 ft/min	2 A	1 hp	
TC5-09	Conveyor - Incline	4' - 0"	2°	180.0 ft/min	2 A	1 hp	
TC5-10	Conveyor - Merge (Cuttable)	6' - 3"		210.0 ft/min	5 A	3 hp	
Grand total: 11		123' - 11"			35 A		

TOTAL FLA (TOTAL + 15A Transformer):	50 FLA

CONVEYOR MANIFEST - CS4

NEW ID	Family	CONVEYOR LENGTH	ANGLE	BELT SPEED	FLA	HP	CONDITION
CS4-01	Conveyor - Check-in	5' - 3"		90.0 ft/min	2 A	1 hp	
CS4-02	Conveyor - Decline	14' - 4"	20°	120.0 ft/min	2 A	1 hp	
CS4-03	Conveyor - Power Turn	9' - 0"		150.0 ft/min	3 A	2 hp	
CS4-04	Conveyor - Transport	49' - 6"		180.0 ft/min	5 A	3 hp	
CS4-05	Conveyor - Incline	24' - 11"	12°	180.0 ft/min	5 A	3 hp	
CS4-06	Conveyor - Power Spiral Incline	9' - 3"	12°	180.0 ft/min	3 A	2 hp	
CS4-07	Conveyor - Incline	31' - 11"	1°	180.0 ft/min	3 A	2 hp	
CS4-08	Conveyor - Transport	4' - 0"		180.0 ft/min	2 A	1 hp	
CS4-09	Conveyor - Transport	4' - 0"		180.0 ft/min	2 A	1 hp	
CS4-10	Conveyor - Power Turn	4' - 6"		180.0 ft/min	3 A	2 hp	
CS4-11	Conveyor - Transport	4' - 0"		180.0 ft/min	2 A	1 hp	
CS4-12	Conveyor - Merge (Cuttable)	6' - 3"		210.0 ft/min	5 A	3 hp	
Grand total: 12		166' - 11"			39 A		

TOTAL FLA (TOTAL + 15A Transformer):	54 FLA

TEMPORARY SCREENING ONLY

CONVEYOR MANIFEST - TML1 (TEMPORARY SCREENING)

NEW ID	Family	CONVEYOR LENGTH	ANGLE	BELT SPEED	FLA	HP	CONDITION
TML-01	Conveyor - Transport	20' - 0"		90.0 ft/min	2 A	1 hp	
TML-02	Conveyor - Power Turn	9' - 0"		120.0 ft/min	3 A	2 hp	
TML-03	Conveyor - Transport	19' - 6"		150.0 ft/min	2 A	1 hp	
TML-04	Conveyor - Power Turn	6' - 6"		180.0 ft/min	3 A	2 hp	
TML-05	Conveyor - Transport	70' - 6"		180.0 ft/min	8 A	5 hp	
TML-06	Conveyor - Breakover	38' - 5"	18°	180.0 ft/min	8 A	5 hp	
TML-08	Conveyor - Transport	9' - 7"		180.0 ft/min	2 A	1 hp	
TML-07	Conveyor - Transport	35' - 11"		180.0 ft/min	3 A	2 hp	
TML-09	Conveyor - Power Turn	6' - 6"		180.0 ft/min	3 A	2 hp	
Grand total: 9		216' - 1"			35 A		

TOTAL FLA (TOTAL + 15A Transformer):	49 FLA

CONVEYOR MANIFEST - TMF (TEMPORARY SCREENING)

NEW ID	Family	CONVEYOR LENGTH	ANGLE	BELT SPEED	FLA	HP	CONDITION
TMF1-01	Conveyor - Transport	7' - 0"		180.0 ft/min	2 A	1 hp	
TMF1-02	Conveyor - Breakover	19' - 11"	18°	180.0 ft/min	2 A	1 hp	
TMF1-03	Tip Chute	0' - 0"			0 A		
Grand total: 3		26' - 11"			4 A		

TOTAL FLA (TOTAL + 15A Transformer):	54 FLA

CONVEYOR MANIFEST - TMU - MAKE UP DEVICE (TEMPORARY SCREENING)

NEW ID	EQUIPMENT TYPE	CONVEYOR LENGTH	MOTOR COUNT	DEVICE SPEED	FLA	CONDITION
TMU1		232' - 10"	3	90.0 ft/min	33 A	
Grand total: 11		232' - 10"	3		33 A	

TOTAL FLA (TOTAL + 15A Transformer):	48 FLA

GENERAL NOTES: CONVEYOR MANIFEST

1. ALL SPEEDS ARE LISTED FOR REFERENCE ONLY. BHS CONTRACTOR IS TO VERIFY AND ENSURE ALL CONVEYOR SPEEDS MAXIMIZE SYSTEM THROUGHPUT AND MINIMIZE BAG-IN-SYSTEM TIME.

2. QUEUES UPSTREAM OF EDS DEVICES WILL UTILIZE VFD'S AND OPERATE ON DUAL SPEEDS AS REQUIRED TO MAINTAIN AND MAZIMIZE THROUGHPUT OF MACHINES.

CONVEYOR MANIFEST NOTE - HVAC AREAS

CBIS - INDICATES THE CONVEYORS FOUND IN THE CHECKED BAGGAGE INSPECTION SYSTEM AREA (CBIS) - FOR HVAC ONLY

CBRA - INDICATES THE CONVEYORS FOUND IN THE CHECKED BAGGAGE RESOLUTION AREA (CBRA) - FOR HVAC ONLY

DRAFT - NOT FOR CONSTRUCTION

FOR BIDDING & PERMITTING ONLY, NOT FOR CONSTRUCTION PURPOSES.

REFERENCES – BENCHMARK

DATE	REVISIONS	BY

CONSULTANT'S NAME

mijares ● mora
ARCHITECTS INC.
111 N. FESTIVAL
EL PASO, TEXAS 79912
TEL: 915-542-1993
FAX: 915-542-1994

ARCHITECT'S SEAL

STATE OF TEXAS
ASHER N. DAVID
119923
MAY 31, 2016
LICENSED
PROFESSIONAL ENGINEER

SCALE

DATE	MAY 2016
DESIGN BY	P.C.
DRAWN BY	P.C.
CHKD. BY	C.S.
APPD. BY	J.M.
JOB NO.	201370

PROJECT NAME

EL PASO INTERNATIONAL AIRPORT
CHECKED BAGGAGE INSPECTION SYSTEM

6701 CONVAIR ROAD EL PASO, TEXAS

EL PASO INTERNATIONAL AIRPORT

CITY OF EL PASO

SHEET TITLE

CONVEYOR MANIFEST

B0.04

FILE NO. 238512

SHEET OF

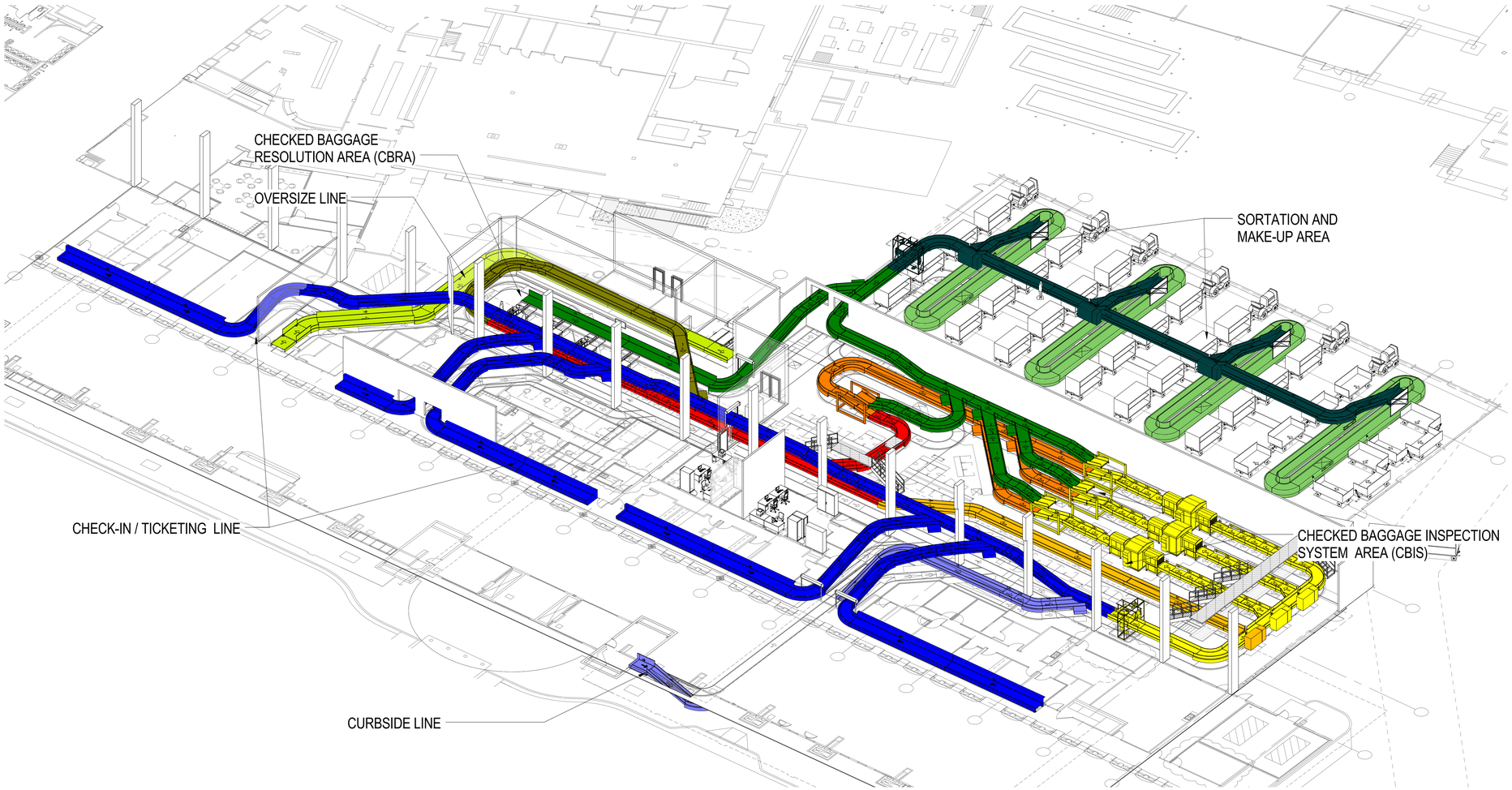

1 ISOMETRIC OVERALL

LEGEND

SUBSYSTEM COLOR LEGEND

- CLEAR BAG SUBSYSTEMS
- CURBSIDE SUBSYSTEMS
- EDS1 SUBSYSTEMS
- EDS2 SUBSYSTEMS
- EDS3 SUBSYSTEMS
- MAKE-UP SUBSYSTEMS
- ORIGINATING SUBSYSTEMS
- OUT OF GAUGE SUBSYSTEMS
- OVERSIZE SUBSYSTEMS
- SORTATION SUBSYSTEMS

NOTES

REFERENCES – BENCHMARK

DATE	REVISIONS	BY

CONSULTANT'S NAME

mijares ● mora
ARCHITECTS INC.
111 N. FESTIVAL
EL PASO, TEXAS 79912
TEL: 915-542-1989
FAX: 915-542-1994

ARCHITECT'S SEAL

STATE OF TEXAS
ASHER N. DAVID
119923
MAY 31, 2016
LICENSED
PROFESSIONAL ENGINEER

SCALE

DATE	MAY 2016
DESIGN BY	P.C.
DRAWN BY	P.C.
CHKD. BY	C.S.
APPD. BY	J.M.
JOB NO.	201370

PROJECT NAME

EL PASO INTERNATIONAL AIRPORT
CHECKED BAGGAGE INSPECTION SYSTEM

6701 CONVAIR ROAD
EL PASO, TEXAS

EL PASO INTERNATIONAL AIRPORT

CITY OF EL PASO

SHEET TITLE

ISOMETRIC VIEW

B0.05

FILE NO. 238512

SHEET OF

FOR BIDDING & PERMITTING ONLY, NOT FOR CONSTRUCTION PURPOSES.

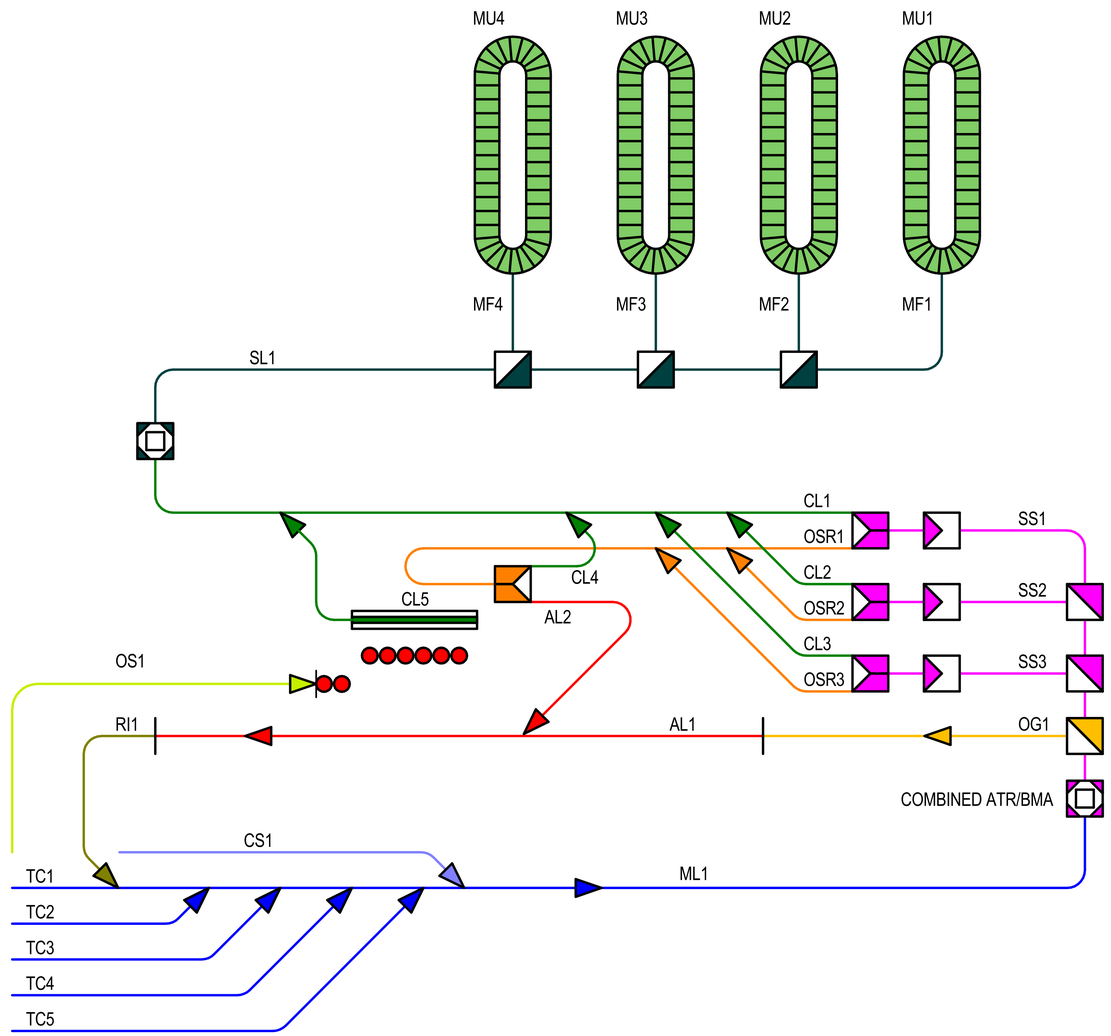

LEGEND

SUBSYSTEM COLOR LEGEND

- CLEAR BAG SUBSYSTEMS
- MAKE-UP SUBSYSTEMS
- CURBSIDE SUBSYSTEMS
- ORIGINATING SUBSYSTEMS
- EDS1 SUBSYSTEMS
- OUT OF GAUGE SUBSYSTEMS
- EDS2 SUBSYSTEMS
- OVERSIZE SUBSYSTEMS
- EDS3 SUBSYSTEMS
- SORTATION SUBSYSTEMS

NOTES

REFERENCES – BENCHMARK

DATE	REVISIONS	BY

CONSULTANT'S NAME

mijares ● mora
ARCHITECTS INC.
111 N. FESTIVAL
EL PASO, TEXAS 79912
TELEPHONE: 915-542-2800
FAX: 915-542-1594

ARCHITECT'S SEAL

STATE OF TEXAS
ASHER N. DAVID
119023
MAY 31, 2016
LICENSED
PROFESSIONAL ENGINEER

SCALE

DATE	MAY 2016
DESIGN BY	P.C.
DRAWN BY	P.C.
CHKD. BY	C.S.
APPD. BY	J.M.
JOB NO.	201370

PROJECT NAME

EL PASO INTERNATIONAL AIRPORT
CHECKED BAGGAGE INSPECTION SYSTEM

6701 CONVAIR ROAD — EL PASO, TEXAS

EL PASO INTERNATIONAL AIRPORT

CITY OF EL PASO

SHEET TITLE

SINGLE LINE DIAGRAM

B0.06

FILE NO. 238512

SHEET OF

FOR BIDDING & PERMITTING ONLY, NOT FOR CONSTRUCTION PURPOSES.

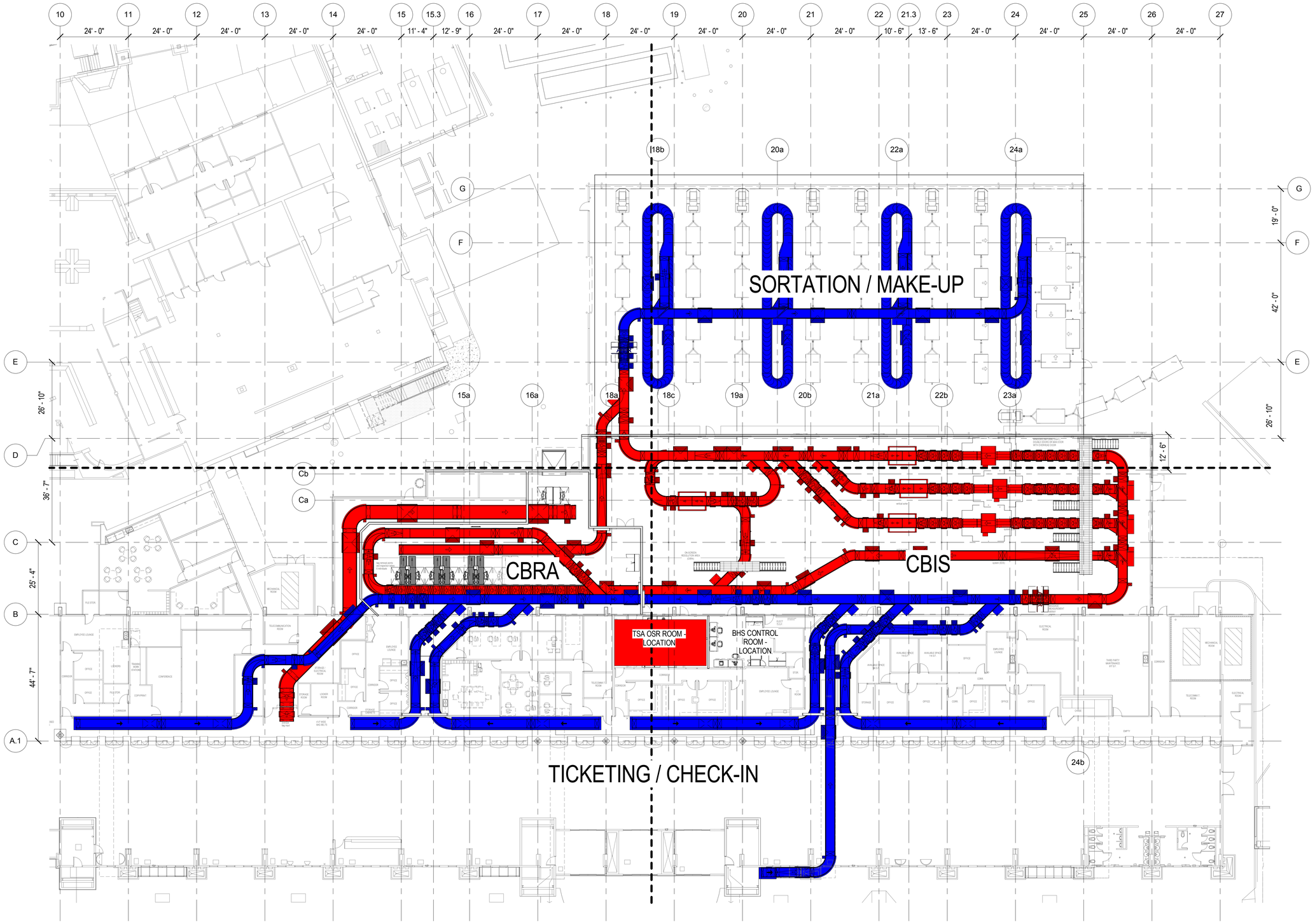

1 PROPOSED BHS LAYOUT - OVERALL - ALLOCABLE VS NON-ALLOCABLE
1/16" = 1'-0"

PLAN NORTH

LEGEND

TSA ALLOCABLE LEGEND

- TSA ALLOCABLE
- NON-ALLOCABLE

NOTES

REFERENCES – BENCHMARK

DATE	REVISIONS	BY

CONSULTANT'S NAME

mijares ● mora
ARCHITECTS INC.
111 N. FESTIVAL
EL PASO, TEXAS 79912
TEL: 915-542-8989
FAX: 915-542-1594

ARCHITECT'S SEAL

STATE OF TEXAS
ASHER N. DAVID
119023
MAY 31, 2016
LICENSED
PROFESSIONAL ENGINEER

SCALE

DATE	MAY 2016
DESIGN BY	P.C.
DRAWN BY	P.C.
CHKD. BY	C.S.
APPD. BY	J.M.
JOB NO.	201370

PROJECT NAME

EL PASO INTERNATIONAL AIRPORT
CHECKED BAGGAGE INSPECTION SYSTEM

6701 CONVAIR ROAD EL PASO, TEXAS

EL PASO INTERNATIONAL AIRPORT

CITY OF EL PASO

SHEET TITLE

TSA ALLOCABLE VS NON–ALLOCABLE

B0.07

FILE NO. 238512

SHEET OF

FOR BIDDING & PERMITTING ONLY, NOT FOR CONSTRUCTION PURPOSES.

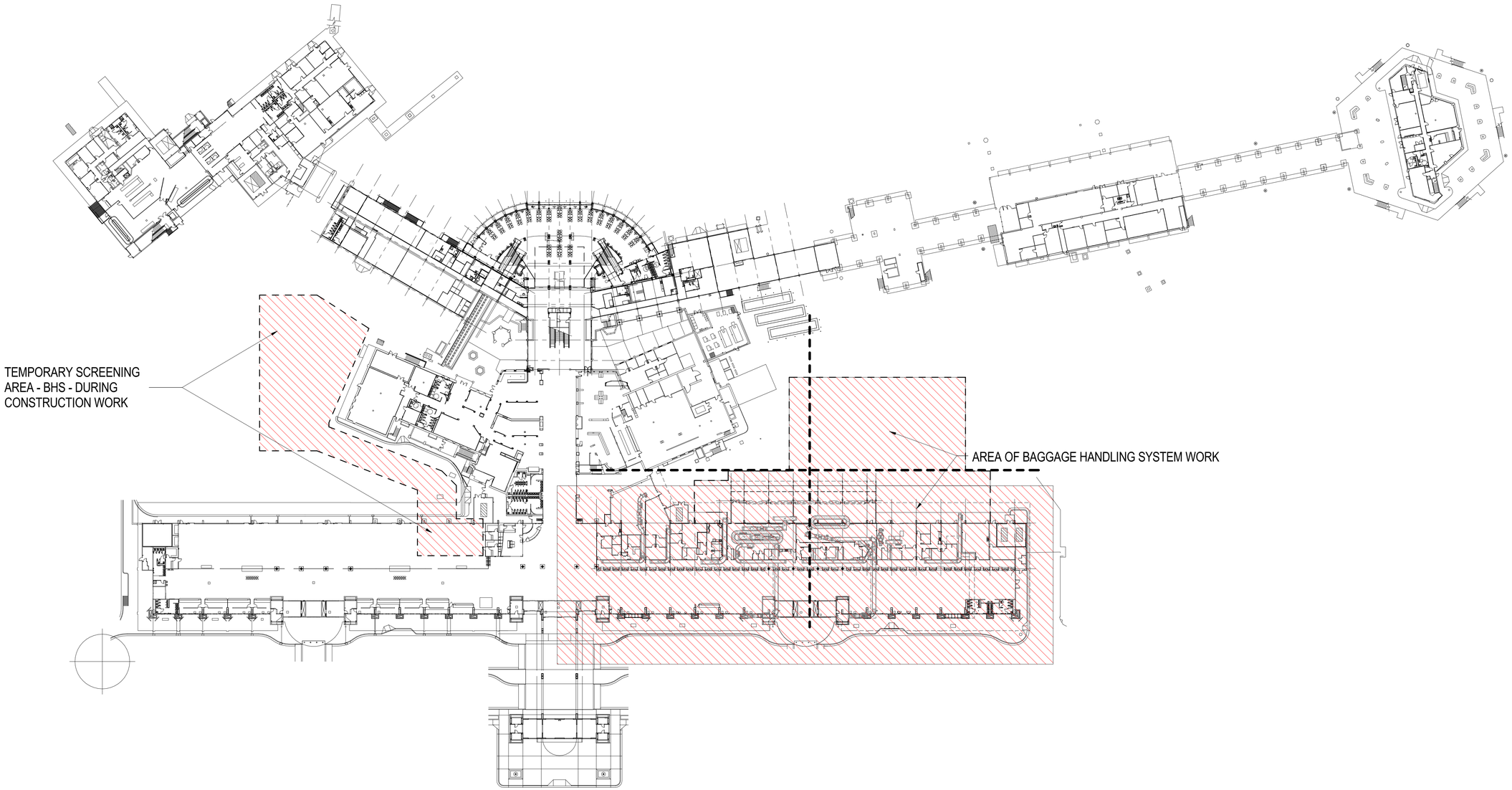

1 EXISTING AIRPORT PLAN - SCOPE OF BHS WORK
1" = 50'-0"

PLAN NORTH

REFERENCES – BENCHMARK

DATE	REVISIONS	BY

CONSULTANTS NAME

mijares ● mora
ARCHITECTS INC.
111 N. FESTIVAL
EL PASO, TEXAS 79912
TEL: 915-542-1989
FAX: 915-542-1994

ARCHITECT'S SEAL

STATE OF TEXAS
ASHER N. DAVID
119923
MAY 31, 2016
LICENSED
PROFESSIONAL ENGINEER

SCALE

DATE	MAY 2016
DESIGN BY	P.C.
DRAWN BY	P.C.
CHKD. BY	C.S.
APPD. BY	J.M.
JOB NO.	201370

PROJECT NAME

EL PASO INTERNATIONAL AIRPORT
CHECKED BAGGAGE INSPECTION SYSTEM

6701 CONVAIR ROAD EL PASO, TEXAS

EL PASO INTERNATIONAL AIRPORT

CITY OF EL PASO

SHEET TITLE

EXISTING AIRPORT PLAN – OVERALL – BHS SCOPE OF WORK

B1.00

FILE NO. 238512

SHEET OF

FOR BIDDING & PERMITTING ONLY, NOT FOR CONSTRUCTION PURPOSES.

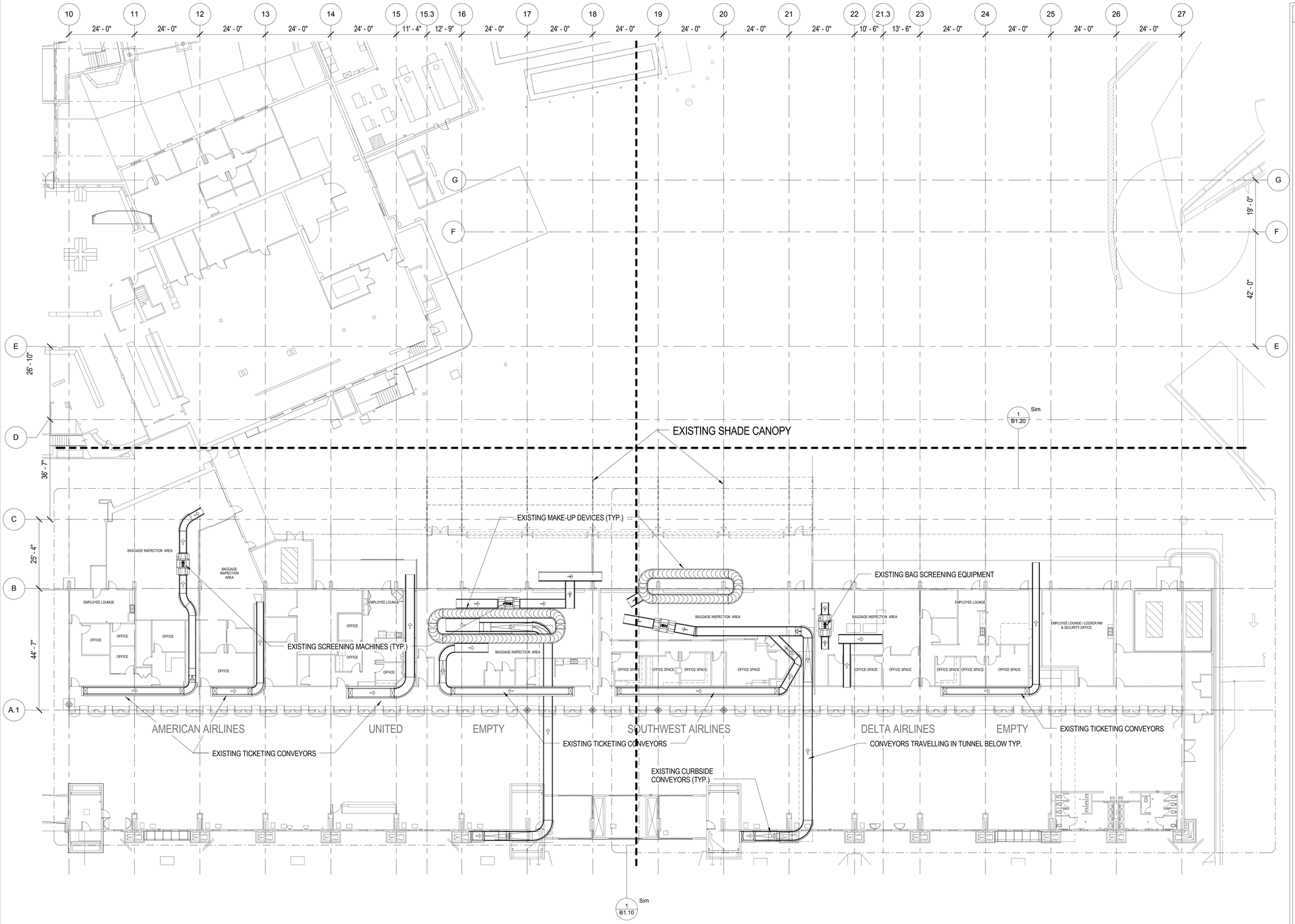

1 EXISTING BAGGAGE HANDLING SYSTEM - OVERALL
1/16" = 1'-0"

PLAN NORTH

LEGEND

CONVEYOR LEGEND

- NEW CONVEYORS INSTALLED
- EXISTING CONVEYORS
- CONVEYORS DEMOLISHED OR REMOVED

REFERENCES – BENCHMARK

DATE	REVISIONS	BY

CONSULTANT'S NAME

mijares ● mora
ARCHITECTS INC.
111 N. FESTIVAL
EL PASO, TEXAS 79912
TELEPHONE: 915-542-1989
FAX: 915-542-1594

ARCHITECT'S SEAL

STATE OF TEXAS
ASHER N. DAVID
119923
MAY 31, 2016
LICENSED
PROFESSIONAL ENGINEER

SCALE

DATE	MAY 2016
DESIGN BY	P.C.
DRAWN BY	P.C.
CHKD. BY	C.S.
APPD. BY	J.M.
JOB NO.	201370

PROJECT NAME

EL PASO INTERNATIONAL AIRPORT
CHECKED BAGGAGE INSPECTION SYSTEM

6701 CONVAIR ROAD EL PASO, TEXAS

EL PASO INTERNATIONAL AIRPORT

CITY OF EL PASO

SHEET TITLE

EXISTING BHS PLAN

B1.01

FILE NO. 238512

SHEET OF

FOR BIDDING & PERMITTING ONLY, NOT FOR CONSTRUCTION PURPOSES.

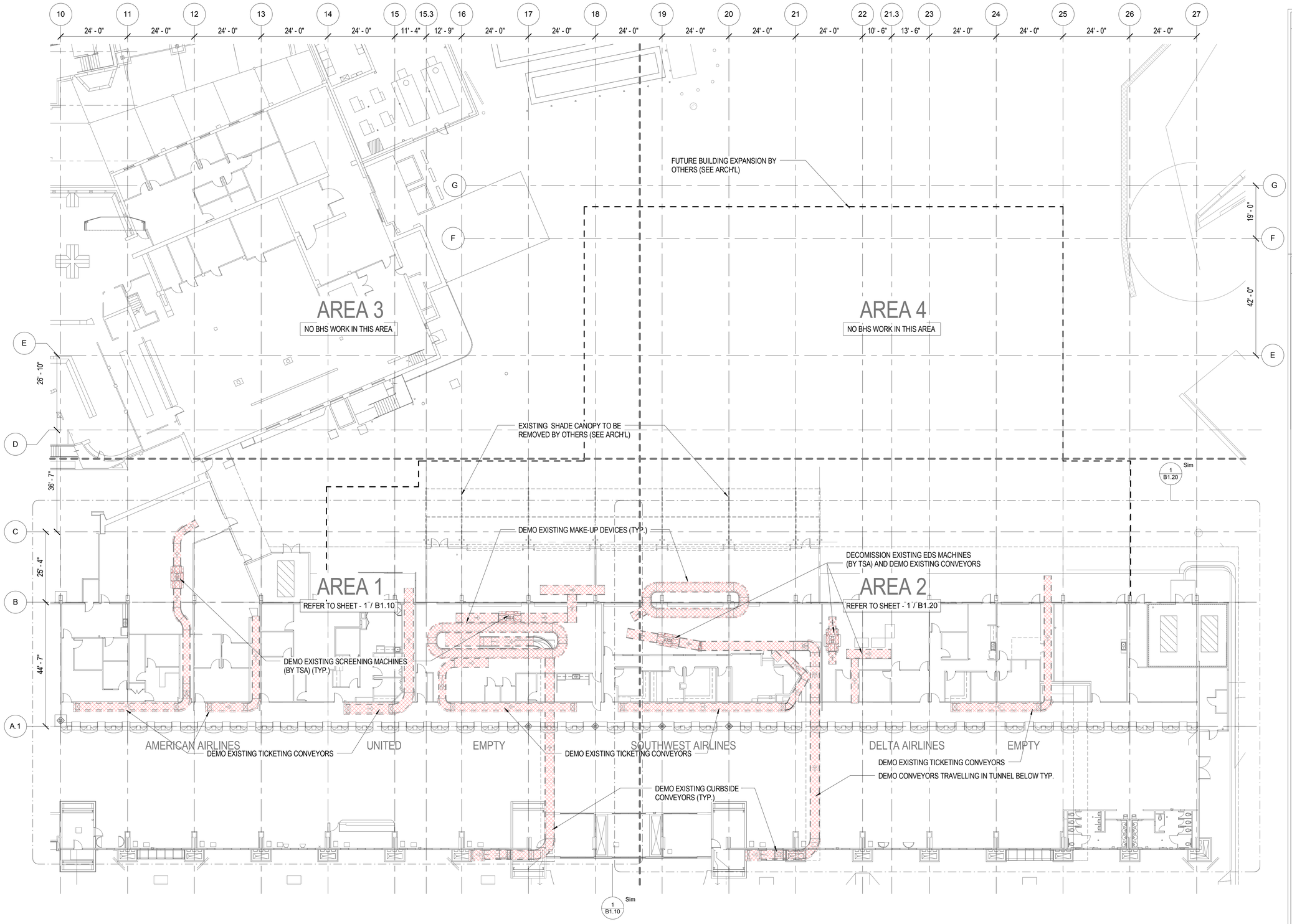

1 EXISTING AND DEMO BHS - OVERALL
1/16" = 1'-0"

PLAN NORTH

LEGEND

CONVEYOR LEGEND

- NEW CONVEYORS INSTALLED
- EXISTING CONVEYORS
- CONVEYORS DEMOLISHED OR REMOVED

NOTES

DEMOLITION PLAN SHEET NOTES

1. REMOVE ALL CONDUIT, JUNCTION BOXES, AND CONTROL WIRING FOR UNUSED CONVEYOR SEGMENTS TO THE MOTOR CONTROL PANEL.

2. EDS DEVICES AND RELATED EQUIPMENT TO BE REMOVED AND DECOMMISSIONED BY TSA.

REFERENCES – BENCHMARK

DATE	REVISIONS	BY

CONSULTANT'S NAME

mijares ● mora
ARCHITECTS INC.
111 N. FESTIVAL
EL PASO, TEXAS 79912
TEL: 915-542-1989
FAX: 915-542-1994

ARCHITECT'S SEAL

STATE OF TEXAS
ASHER N. DAVID
119023
MAY 31, 2016
LICENSED
PROFESSIONAL ENGINEER

SCALE

DATE	MAY 2016
DESIGN BY	P.C.
DRAWN BY	P.C.
CHKD. BY	C.S.
APPD. BY	J.M.
JOB NO.	201370

PROJECT NAME

EL PASO INTERNATIONAL AIRPORT
CHECKED BAGGAGE INSPECTION SYSTEM

6701 CONVAIR ROAD EL PASO, TEXAS

EL PASO INTERNATIONAL AIRPORT

CITY OF EL PASO

SHEET TITLE

EXISTING AND DEMO BHS – OVERALL

B1.02

FILE NO. 238512

SHEET OF

FOR BIDDING & PERMITTING ONLY, NOT FOR CONSTRUCTION PURPOSES.

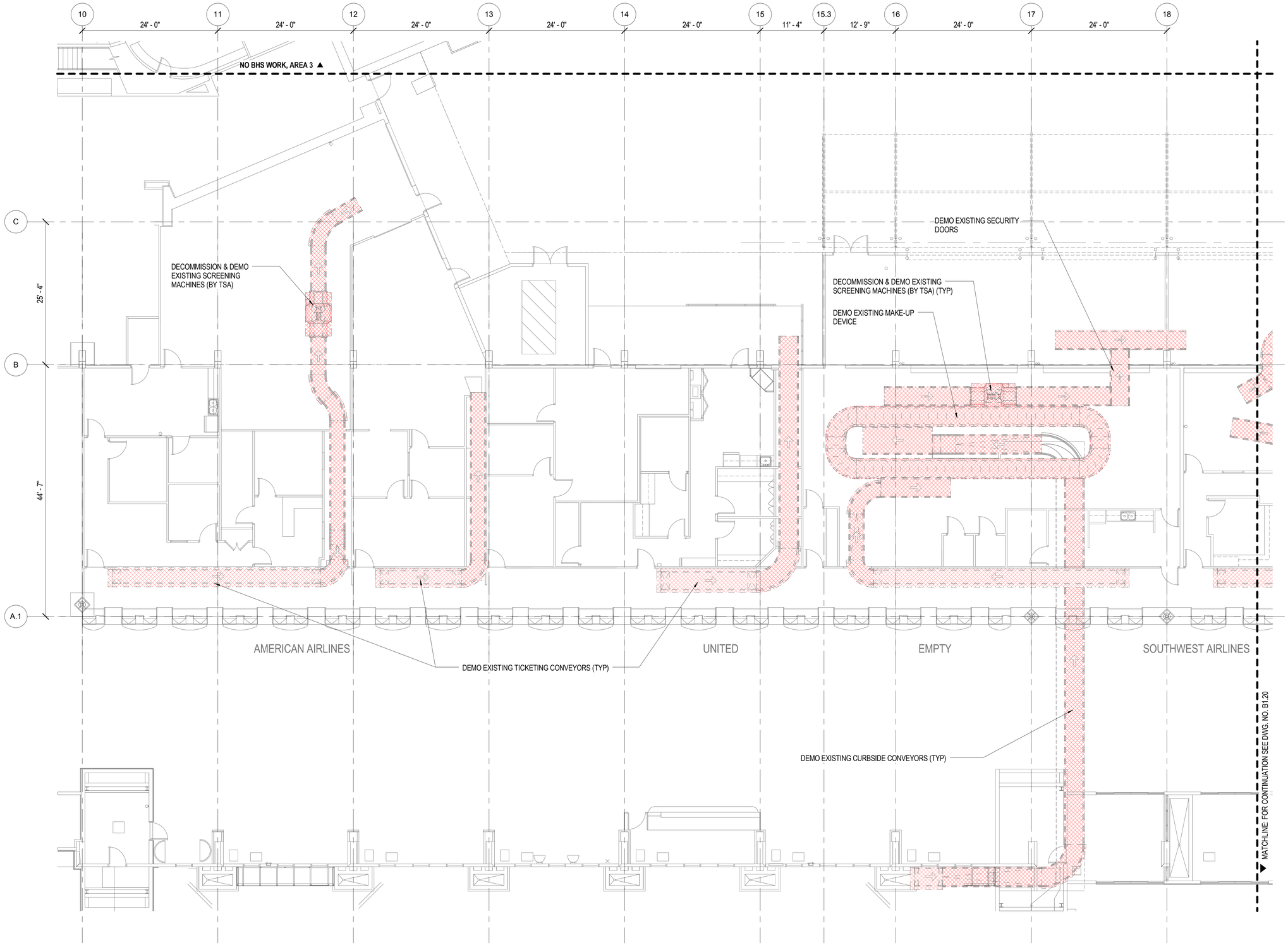

1 B1.01 EXISTING AND DEMO BHS - AREA 1

1/8" = 1'-0"

PLAN NORTH

LEGEND

CONVEYOR LEGEND

- NEW CONVEYORS INSTALLED
- EXISTING CONVEYORS
- CONVEYORS DEMOLISHED OR REMOVED

NOTES

DEMOLITION PLAN SHEET NOTES

1. REMOVE ALL CONDUIT, JUNCTION BOXES, AND CONTROL WIRING FOR UNUSED CONVEYOR SEGMENTS TO THE MOTOR CONTROL PANEL.

2. EDS DEVICES AND RELATED EQUIPMENT TO BE REMOVED AND DECOMMISSIONED BY TSA.

REFERENCES – BENCHMARK

DATE	REVISIONS	BY

CONSULTANT'S NAME

mijares ● mora
ARCHITECTS INC.
111 N. FESTIVAL
EL PASO, TEXAS 79912
TEL: 915-542-1989
FAX: 915-542-1994

ARCHITECT'S SEAL

STATE OF TEXAS
ASHER N. DAVID
119923
MAY 31, 2016
LICENSED
PROFESSIONAL ENGINEER

SCALE

DATE	MAY 2016
DESIGN BY	P.C.
DRAWN BY	P.C.
CHKD. BY	C.S.
APPD. BY	J.M.
JOB NO.	201370

PROJECT NAME

EL PASO INTERNATIONAL AIRPORT
CHECKED BAGGAGE INSPECTION SYSTEM

6701 CONVAIR ROAD

EL PASO, TEXAS

EL PASO INTERNATIONAL AIRPORT

CITY OF EL PASO

SHEET TITLE

EXISTING AND DEMO BHS – AREA 1

B1.10

FILE NO. 238512

SHEET OF

FOR BIDDING & PERMITTING ONLY, NOT FOR CONSTRUCTION PURPOSES.

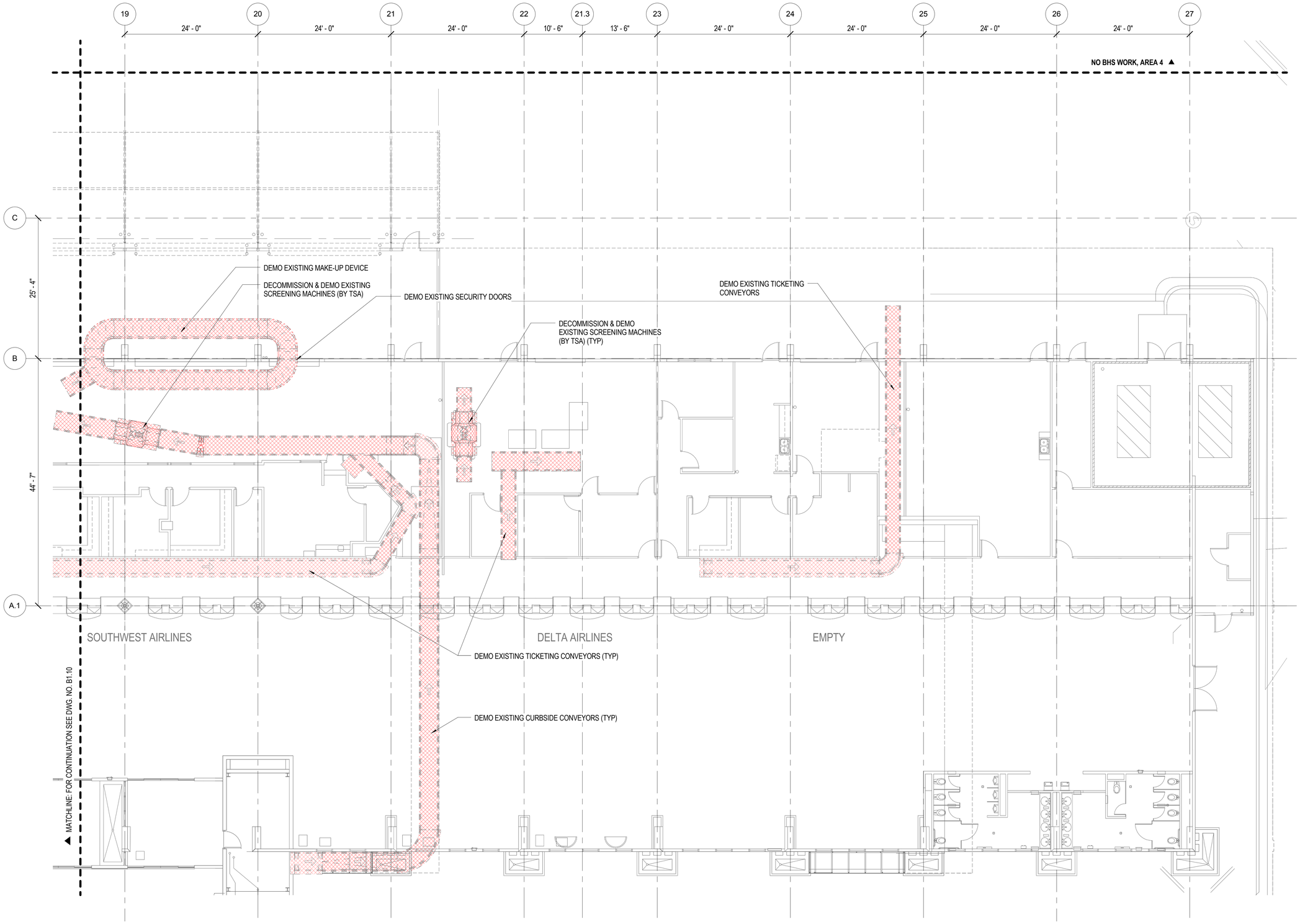

1 EXISTING AND DEMO BHS - AREA 2
1/8" = 1'-0"

PLAN NORTH

LEGEND

CONVEYOR LEGEND

- NEW CONVEYORS INSTALLED
- EXISTING CONVEYORS
- CONVEYORS DEMOLISHED OR REMOVED

NOTES

DEMOLITION PLAN SHEET NOTES

1. REMOVE ALL CONDUIT, JUNCTION BOXES, AND CONTROL WIRING FOR UNUSED CONVEYOR SEGMENTS TO THE MOTOR CONTROL PANEL.

2. EDS DEVICES AND RELATED EQUIPMENT TO BE REMOVED AND DECOMMISSIONED BY TSA.

REFERENCES – BENCHMARK

DATE	REVISIONS	BY

CONSULTANT'S NAME

mijares ● mora
ARCHITECTS INC.
111 N. FESTIVAL
EL PASO, TEXAS 79912
TEL: 915-542-1989
FAX: 915-542-1994

ARCHITECT'S SEAL

STATE OF TEXAS
ASHER N. DAVID
119023
MAY 31, 2016
LICENSED
PROFESSIONAL ENGINEER

SCALE

DATE	MAY 2016
DESIGN BY	P.C.
DRAWN BY	P.C.
CHKD. BY	C.S.
APPD. BY	J.M.
JOB NO.	201370

PROJECT NAME

EL PASO INTERNATIONAL AIRPORT
CHECKED BAGGAGE INSPECTION SYSTEM

6701 CONVAIR ROAD
EL PASO, TEXAS

EL PASO INTERNATIONAL AIRPORT

CITY OF EL PASO

SHEET TITLE

EXISTING AND DEMO BHS – AREA 2

B1.20

FILE NO. 238512

SHEET OF

FOR BIDDING & PERMITTING ONLY, NOT FOR CONSTRUCTION PURPOSES.

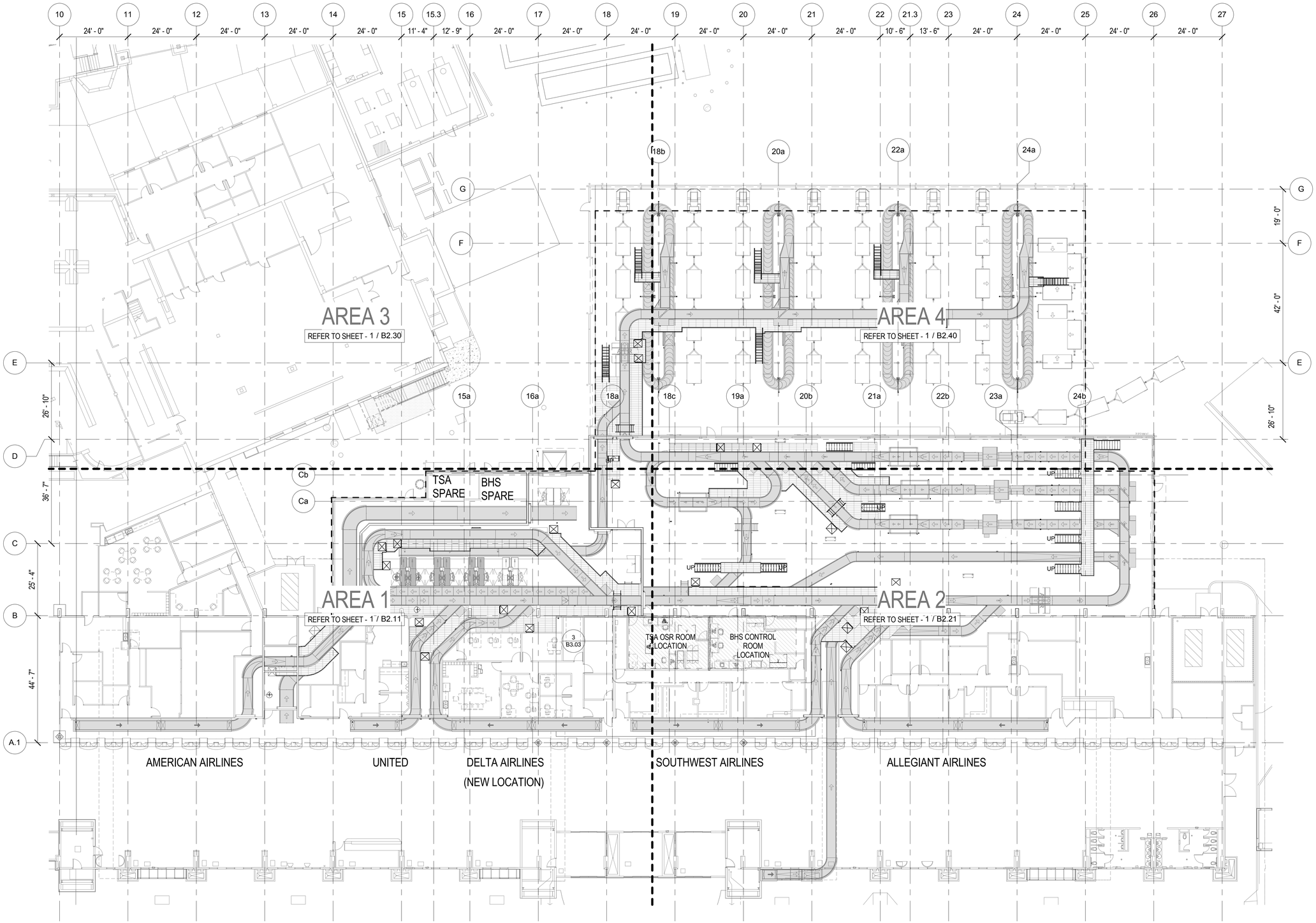

1 PROPOSED BHS LAYOUT - OVERALL
1/16" = 1'-0"

PLAN NORTH

LEGEND

CONVEYOR LEGEND

- NEW CONVEYORS INSTALLED
- EXISTING CONVEYORS
- CONVEYORS DEMOLISHED OR REMOVED

NOTES

REFERENCES – BENCHMARK

DATE	REVISIONS	BY

CONSULTANT'S NAME

mijares ● mora
ARCHITECTS INC.
111 N. FESTIVAL
EL PASO, TEXAS 79912
TEL: 915-542-1980
FAX: 915-542-1594

ARCHITECT'S SEAL

STATE OF TEXAS
ASHER N. DAVID
119023
MAY 31, 2016
LICENSED
PROFESSIONAL ENGINEER

SCALE

DATE	MAY 2016
DESIGN BY	P.C.
DRAWN BY	P.C.
CHKD. BY	C.S.
APPD. BY	J.M.
JOB NO.	201370

PROJECT NAME

EL PASO INTERNATIONAL AIRPORT
CHECKED BAGGAGE INSPECTION SYSTEM

EL PASO, TEXAS

6701 CONVAIR ROAD

EL PASO INTERNATIONAL AIRPORT

CITY OF EL PASO

SHEET TITLE

PROPOSED BHS PLAN – OVERALL

B2.00

FILE NO. 238512

SHEET OF

FOR BIDDING & PERMITTING ONLY, NOT FOR CONSTRUCTION PURPOSES.

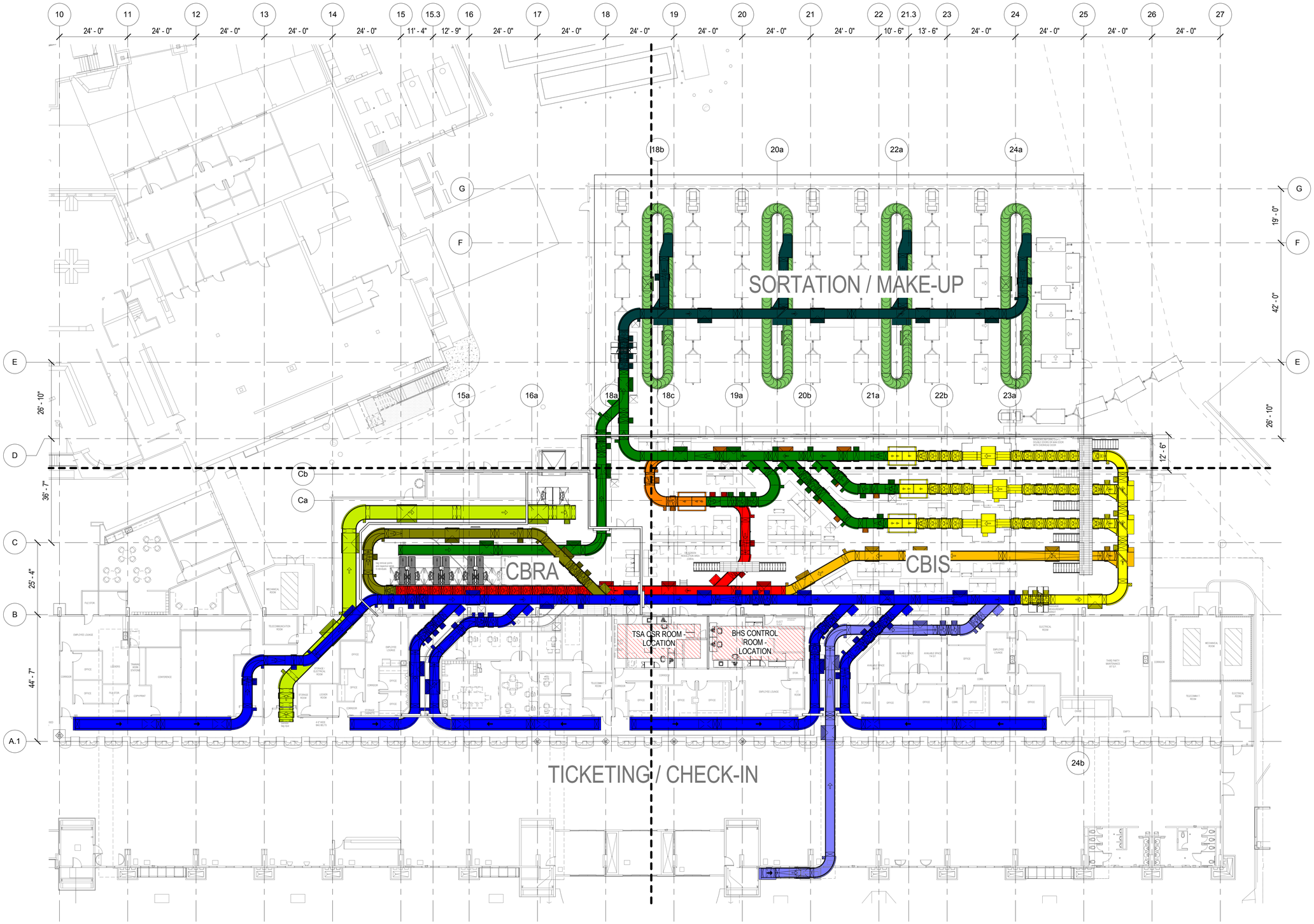

1 PROPOSED BHS LAYOUT - OVERALL - SUBSYSTEM LAYOUT
1/16" = 1'-0"

PLAN NORTH

LEGEND

SUBSYSTEM COLOR LEGEND

- CLEAR BAG SUBSYSTEMS
- CURBSIDE SUBSYSTEMS
- EDS1 SUBSYSTEMS
- EDS2 SUBSYSTEMS
- EDS3 SUBSYSTEMS
- MAKE-UP SUBSYSTEMS
- ORIGINATING SUBSYSTEMS
- OUT OF GAUGE SUBSYSTEMS
- OVERSIZE SUBSYSTEMS
- SORTATION SUBSYSTEMS

NOTES

REFERENCES – BENCHMARK

DATE	REVISIONS	BY

CONSULTANT'S NAME

mijares ● mora
ARCHITECTS INC.
111 N. FESTIVAL
EL PASO, TEXAS 79912
TEL: 915-542-1989
FAX: 915-542-1594

ARCHITECT'S SEAL

STATE OF TEXAS
ASHER N. DAVID
119923
MAY 31, 2016
LICENSED
PROFESSIONAL ENGINEER

SCALE

DATE	MAY 2016
DESIGN BY	P.C.
DRAWN BY	P.C.
CHKD. BY	C.S.
APPD. BY	J.M.
JOB NO.	201370

PROJECT NAME

EL PASO INTERNATIONAL AIRPORT
CHECKED BAGGAGE INSPECTION SYSTEM

6701 CONVAIR ROAD EL PASO, TEXAS

EL PASO INTERNATIONAL AIRPORT

CITY OF EL PASO

SHEET TITLE

PROPOSED BHS PLAN – OVERALL – SUBSYSTEMS

B2.01

FILE NO. 238512

SHEET OF

FOR BIDDING & PERMITTING ONLY, NOT FOR CONSTRUCTION PURPOSES.

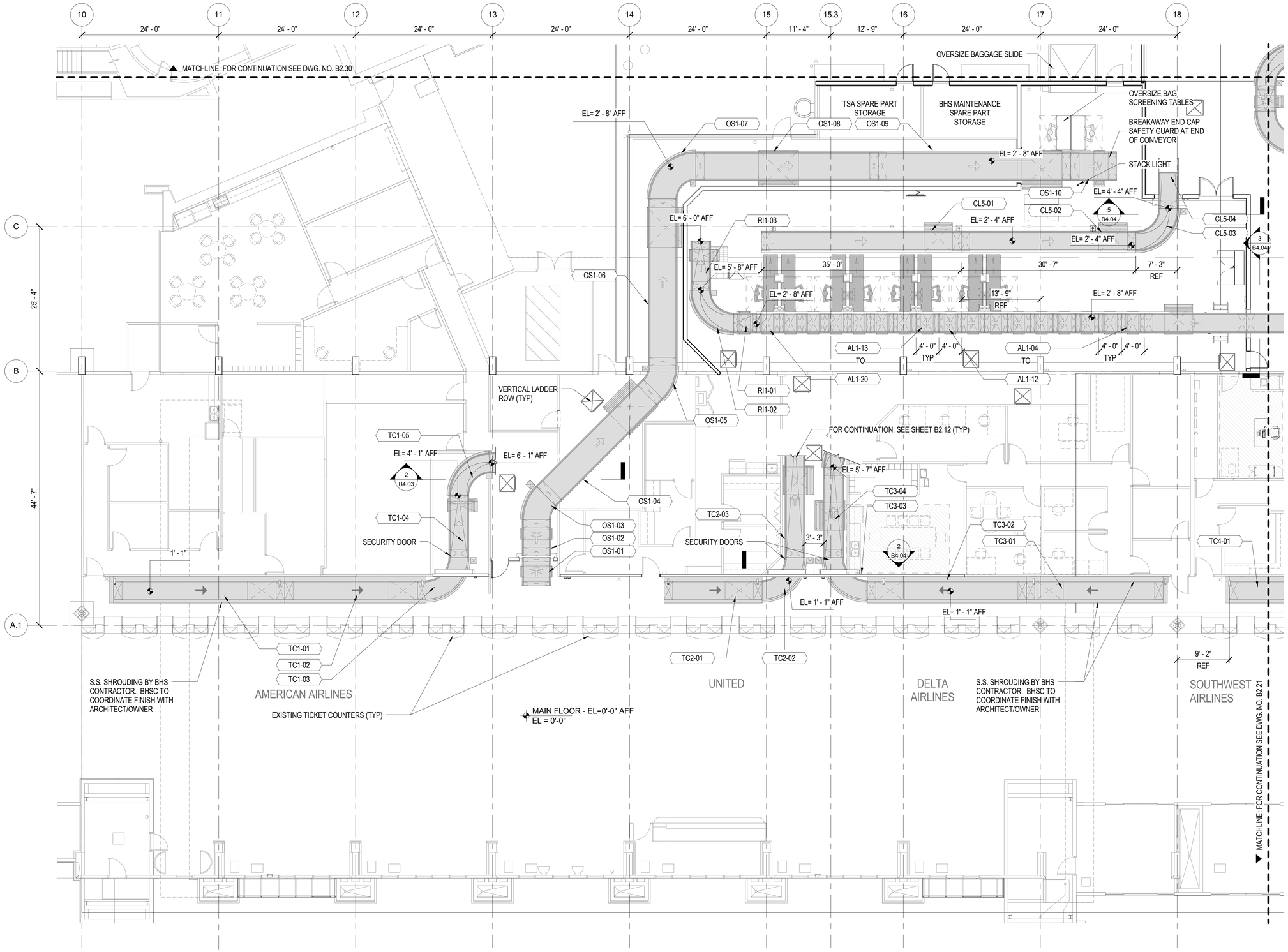

1 PROPOSED BHS LAYOUT - AREA 1 - LOWER CONVEYORS
1/8" = 1'-0"

PLAN NORTH

LEGEND

CONVEYOR LEGEND

- NEW CONVEYORS INSTALLED
- EXISTING CONVEYORS
- CONVEYORS DEMOLISHED OR REMOVED

NOTES

BHS CONVEYOR NOTES:

ALL VERTICAL DIMENSIONS ARE REFERENCED ABOVE FINISHED FLOOR RELATIVE TO THE CURRENT FLOOR ELEVATION. REFER TO ARCHITECTURAL FLOOR ELEVATION. REFER TO ARCHITECTURAL AND CIVIL DRAWINGS FOR ACTUAL FLOOR GRADING AND ELEVATIONS. BHS CONTRACTOR TO FIELD VERIFY ALL FLOOR ELEVATIONS BEFORE BEGINNING WORK.

REFERENCES – BENCHMARK

DATE	REVISIONS	BY

CONSULTANT'S NAME

mijares ● mora
ARCHITECTS INC.
111 N. FESTIVAL
EL PASO, TEXAS 79912
TEL: 915-542-1989
FAX: 915-542-1994

ARCHITECT'S SEAL

STATE OF TEXAS
ASHER N. DAVID
119023
MAY 31, 2016
LICENSED
PROFESSIONAL ENGINEER

SCALE

DATE	MAY 2016
DESIGN BY	P.C.
DRAWN BY	P.C.
CHKD. BY	C.S.
APPD. BY	J.M.
JOB NO.	201370

PROJECT NAME

EL PASO INTERNATIONAL AIRPORT
CHECKED BAGGAGE INSPECTION SYSTEM

6701 CONVAIR ROAD

EL PASO, TEXAS

EL PASO INTERNATIONAL AIRPORT

CITY OF EL PASO

SHEET TITLE

PROPOSED BHS PLAN – AREA 1 – LOWER CONVEYORS

B2.11

FILE NO. 238512

SHEET OF

FOR BIDDING & PERMITTING ONLY, NOT FOR CONSTRUCTION PURPOSES.

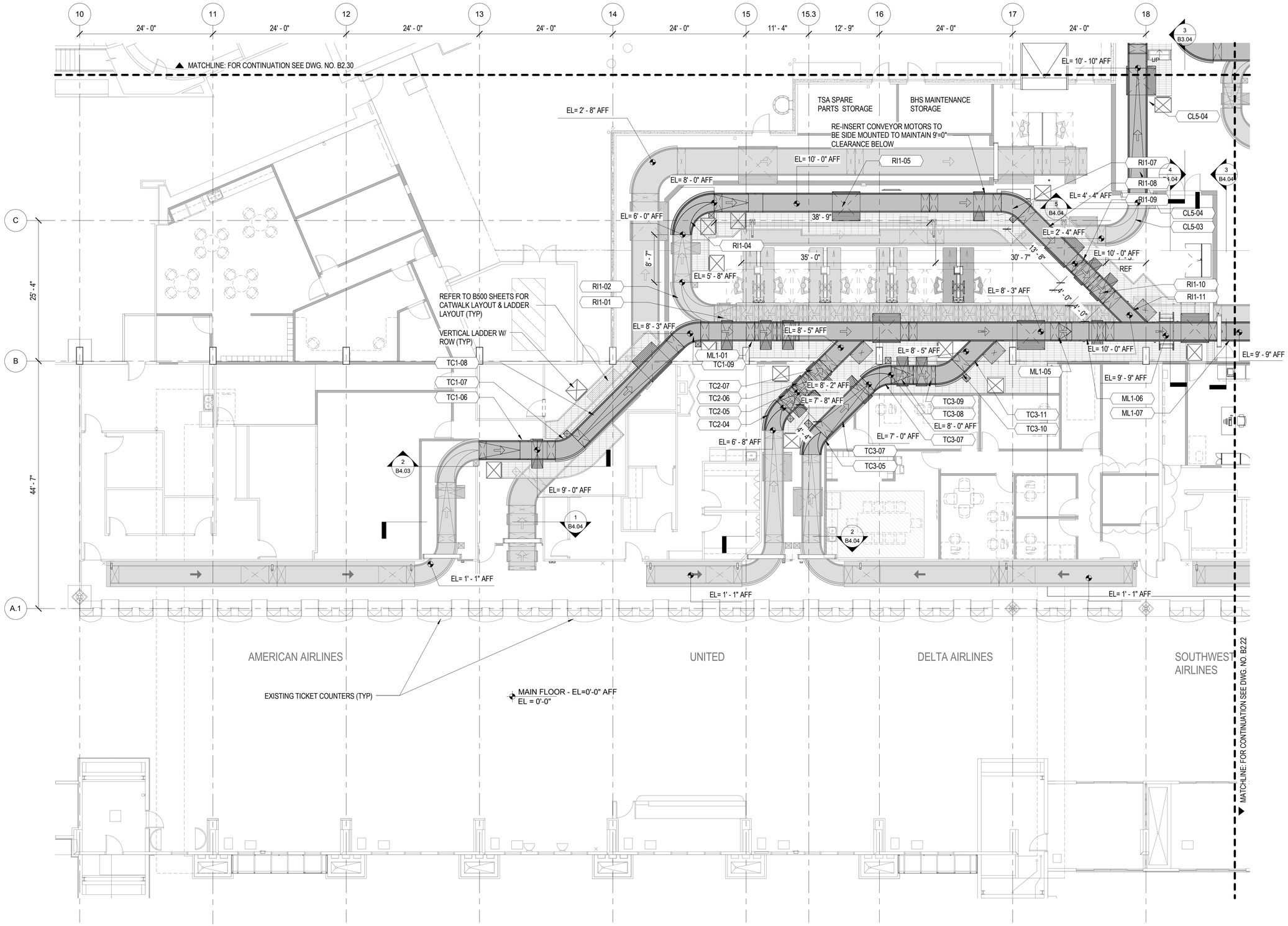

1 PROPOSED BHS LAYOUT - AREA 1 - UPPER CONVEYORS
1/8" = 1'-0"

PLAN NORTH

LEGEND

CONVEYOR LEGEND

- NEW CONVEYORS INSTALLED
- EXISTING CONVEYORS
- CONVEYORS DEMOLISHED OR REMOVED

NOTES

BHS CONVEYOR NOTES:

ALL VERTICAL DIMENSIONS ARE REFERENCED ABOVE FINISHED FLOOR RELATIVE TO THE CURRENT FLOOR ELEVATION. REFER TO ARCHITECTURAL FLOOR ELEVATION. REFER TO ARCHITECTURAL AND CIVIL DRAWINGS FOR ACTUAL FLOOR GRADING AND ELEVATIONS. BHS CONTRACTOR TO FIELD VERIFY ALL FLOOR ELEVATIONS BEFORE BEGINNING WORK.

REFERENCES – BENCHMARK

DATE	REVISIONS	BY

CONSULTANT'S NAME

mijares ● mora
ARCHITECTS INC.
111 N. FESTIVAL
EL PASO, TEXAS 79912
TEL: 915-542-1989
FAX: 915-542-1994

ARCHITECT'S SEAL

STATE OF TEXAS
ASHER N. DAVID
119023
MAY 31, 2016
LICENSED
PROFESSIONAL ENGINEER

SCALE

DATE	MAY 2016
DESIGN BY	P.C.
DRAWN BY	P.C.
CHKD. BY	C.S.
APPD. BY	J.M.
JOB NO.	201370

PROJECT NAME

EL PASO INTERNATIONAL AIRPORT
CHECKED BAGGAGE INSPECTION SYSTEM

6701 CONVAIR ROAD — EL PASO, TEXAS

EL PASO INTERNATIONAL AIRPORT

CITY OF EL PASO

SHEET TITLE

PROPOSED BHS PLAN – AREA 1 – UPPER CONVEYORS

B2.12

FILE NO. 238512

SHEET OF

FOR BIDDING & PERMITTING ONLY, NOT FOR CONSTRUCTION PURPOSES.

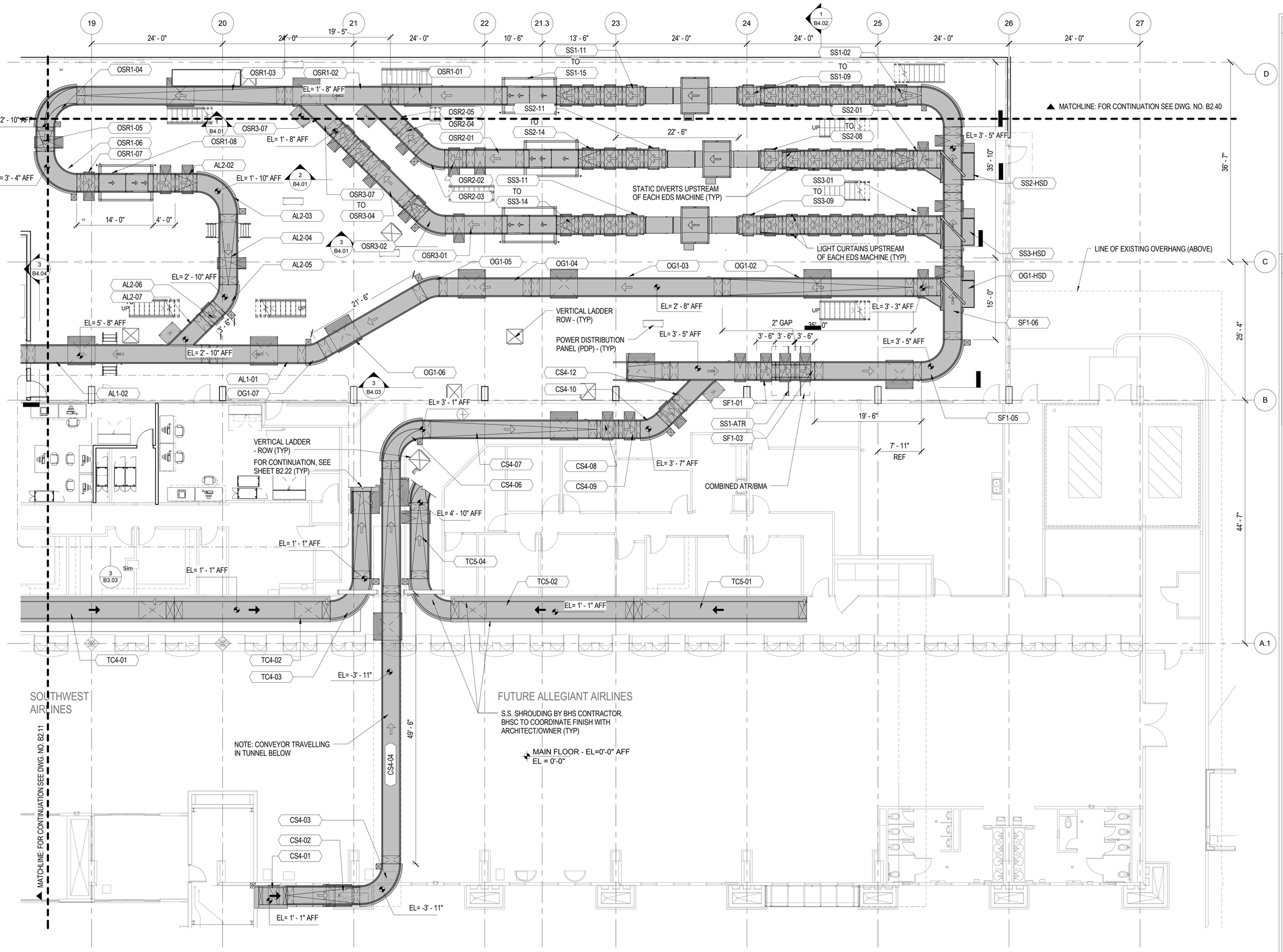

1 PROPOSED BHS LAYOUT - AREA 2 - LOWER CONVEYORS
1/8" = 1'-0"

LEGEND

CONVEYOR LEGEND

- NEW CONVEYORS INSTALLED
- EXISTING CONVEYORS
- CONVEYORS DEMOLISHED OR REMOVED

NOTES

BHS CONVEYOR NOTES:

ALL VERTICAL DIMENSIONS ARE REFERENCED ABOVE FINISHED FLOOR RELATIVE TO THE CURRENT FLOOR ELEVATION. REFER TO ARCHITECTURAL FLOOR ELEVATION. REFER TO ARCHITECTURAL AND CIVIL DRAWINGS FOR ACTUAL FLOOR GRADING AND ELEVATIONS. BHS CONTRACTOR TO FIELD VERIFY ALL FLOOR ELEVATIONS BEFORE BEGINNING WORK.

REFERENCES – BENCHMARK

DATE	REVISIONS	BY

CONSULTANT'S NAME

mijares ● mora
A R C H I T E C T S I N C.
111 N. FESTIVAL
EL PASO, TEXAS 79912
TEL: 915-542-1989
FAX: 915-542-1994

ARCHITECT'S SEAL

STATE OF TEXAS
ASHER N. DAVID
119923
MAY 31, 2016
LICENSED
PROFESSIONAL ENGINEER

SCALE

DATE	MAY 2016
DESIGN BY	P.C.
DRAWN BY	P.C.
CHKD. BY	C.S.
APPD. BY	J.M.
JOB NO.	201370

PROJECT NAME

EL PASO INTERNATIONAL AIRPORT
CHECKED BAGGAGE INSPECTION SYSTEM
6701 CONVAIR ROAD EL PASO, TEXAS

EL PASO INTERNATIONAL AIRPORT

CITY OF EL PASO

SHEET TITLE

PROPOSED BHS PLAN – AREA 2 – LOWER CONVEYORS

B2.21

FILE NO. 238512

SHEET OF

FOR BIDDING & PERMITTING ONLY, NOT FOR CONSTRUCTION PURPOSES.

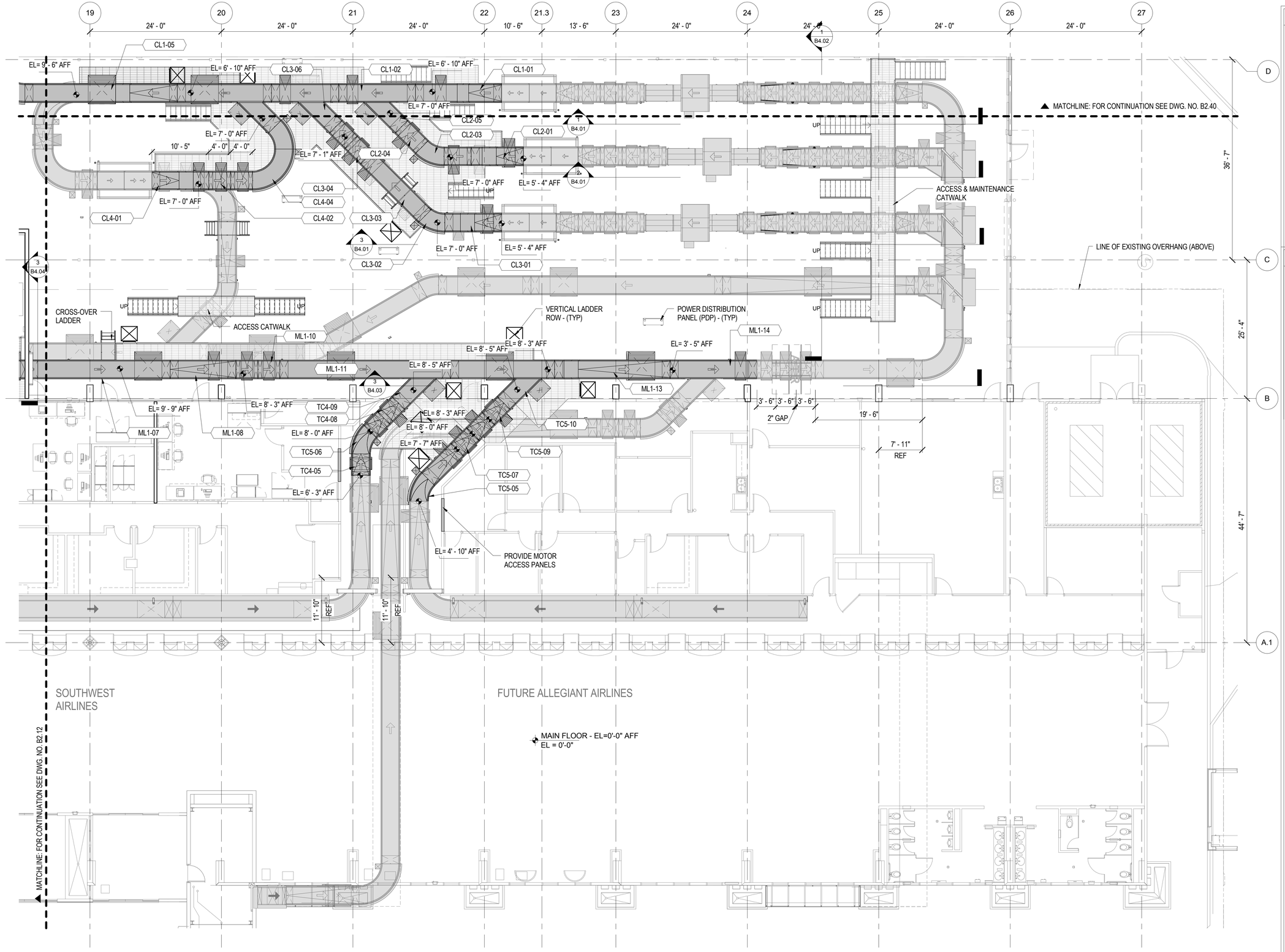

1 PROPOSED BHS LAYOUT - AREA 2 - UPPER CONVEYORS
1/8" = 1'-0"

PLAN NORTH

LEGEND

CONVEYOR LEGEND

- NEW CONVEYORS INSTALLED
- EXISTING CONVEYORS
- CONVEYORS DEMOLISHED OR REMOVED

NOTES

BHS CONVEYOR NOTES:

ALL VERTICAL DIMENSIONS ARE REFERENCED ABOVE FINISHED FLOOR RELATIVE TO THE CURRENT FLOOR ELEVATION. REFER TO ARCHITECTURAL FLOOR ELEVATION. REFER TO ARCHITECTURAL AND CIVIL DRAWINGS FOR ACTUAL FLOOR GRADING AND ELEVATIONS. BHS CONTRACTOR TO FIELD VERIFY ALL FLOOR ELEVATIONS BEFORE BEGINNING WORK.

REFERENCES – BENCHMARK

DATE	REVISIONS	BY

CONSULTANT'S NAME

mijares ● mora
ARCHITECTS INC.
111 N. FESTIVAL
EL PASO, TEXAS 79912
TEL: 915-542-1800
FAX: 915-542-1594

ARCHITECT'S SEAL

STATE OF TEXAS
ASHER N. DAVID
119023
MAY 31, 2016
LICENSED
PROFESSIONAL ENGINEER

SCALE

DATE	MAY 2016
DESIGN BY	P.C.
DRAWN BY	P.C.
CHKD. BY	C.S.
APPD. BY	J.M.
JOB NO.	201370

PROJECT NAME

EL PASO INTERNATIONAL AIRPORT
CHECKED BAGGAGE INSPECTION SYSTEM

EL PASO
INTERNATIONAL AIRPORT

6701 CONVAIR ROAD
EL PASO, TEXAS

CITY OF EL PASO

SHEET TITLE

PROPOSED BHS PLAN – AREA 2 – UPPER CONVEYORS

B2.22

FILE NO. 238512

SHEET OF

FOR BIDDING & PERMITTING ONLY, NOT FOR CONSTRUCTION PURPOSES.

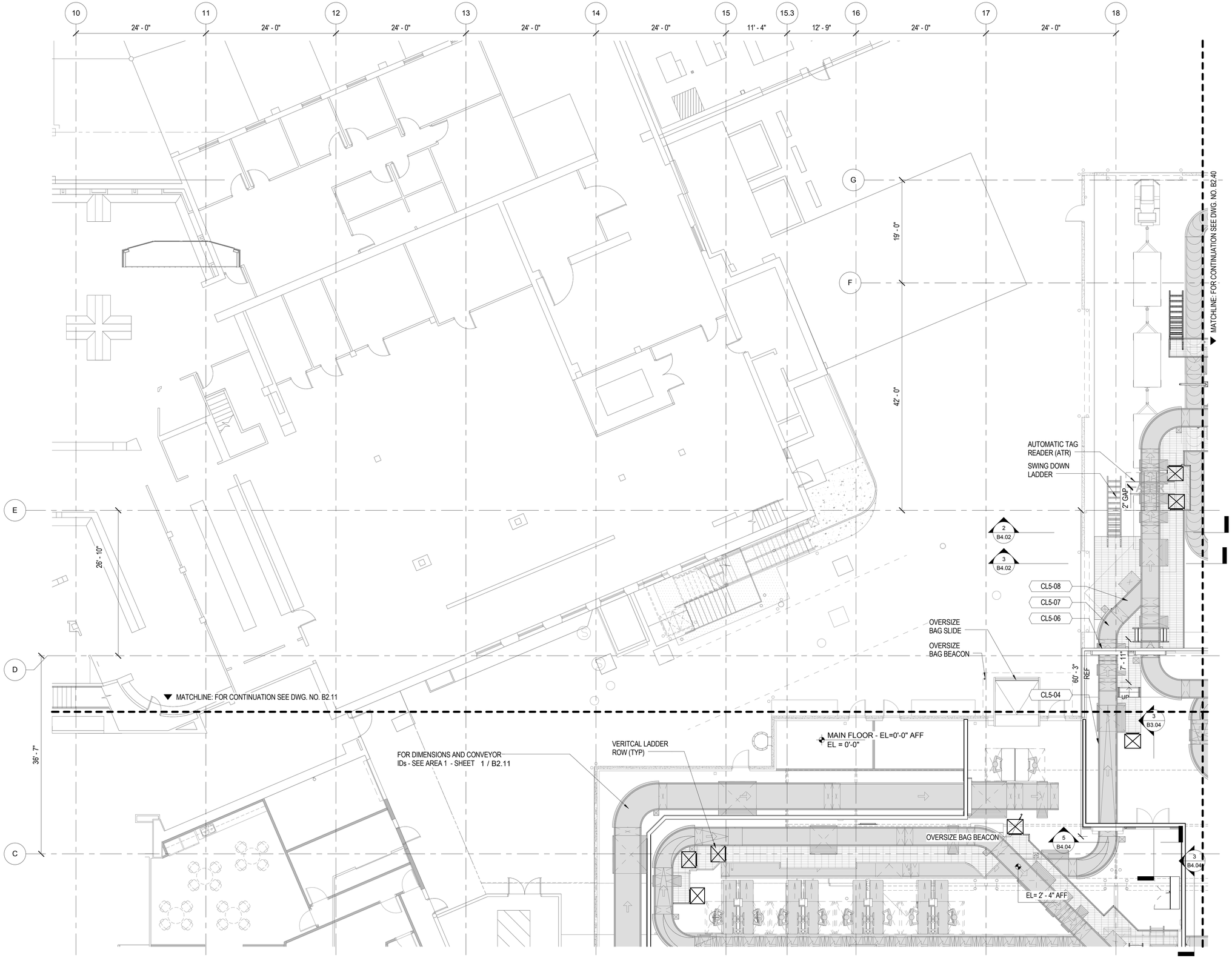

1 PROPOSED BHS LAYOUT - AREA 3
1/8" = 1'-0"

PLAN NORTH

LEGEND

CONVEYOR LEGEND

- NEW CONVEYORS INSTALLED
- EXISTING CONVEYORS
- CONVEYORS DEMOLISHED OR REMOVED

NOTES

BHS CONVEYOR NOTES:

ALL VERTICAL DIMENSIONS ARE REFERENCED ABOVE FINISHED FLOOR RELATIVE TO THE CURRENT FLOOR ELEVATION. REFER TO ARCHITECTURAL FLOOR ELEVATION. REFER TO ARCHITECTURAL AND CIVIL DRAWINGS FOR ACTUAL FLOOR GRADING AND ELEVATIONS. BHS CONTRACTOR TO FIELD VERIFY ALL FLOOR ELEVATIONS BEFORE BEGINNING WORK.

REFERENCES – BENCHMARK

DATE	REVISIONS	BY

CONSULTANT'S NAME

mijares ● mora
ARCHITECTS INC.
111 N. FESTIVAL
EL PASO, TEXAS 79912
TEL: 915-542-1989
FAX: 915-542-1994

ARCHITECT'S SEAL

STATE OF TEXAS
ASHER N. DAVID
119923
MAY 31, 2016
LICENSED
PROFESSIONAL ENGINEER

SCALE

DATE	MAY 2016
DESIGN BY	P.C.
DRAWN BY	P.C.
CHKD. BY	C.S.
APPD. BY	J.M.
JOB NO.	201370

PROJECT NAME

EL PASO INTERNATIONAL AIRPORT
CHECKED BAGGAGE INSPECTION SYSTEM

6701 CONVAIR ROAD EL PASO, TEXAS

EL PASO INTERNATIONAL AIRPORT

CITY OF EL PASO

SHEET TITLE

PROPOSED BHS PLAN – AREA 3

B2.30

FILE NO. 238512

SHEET OF

FOR BIDDING & PERMITTING ONLY, NOT FOR CONSTRUCTION PURPOSES.

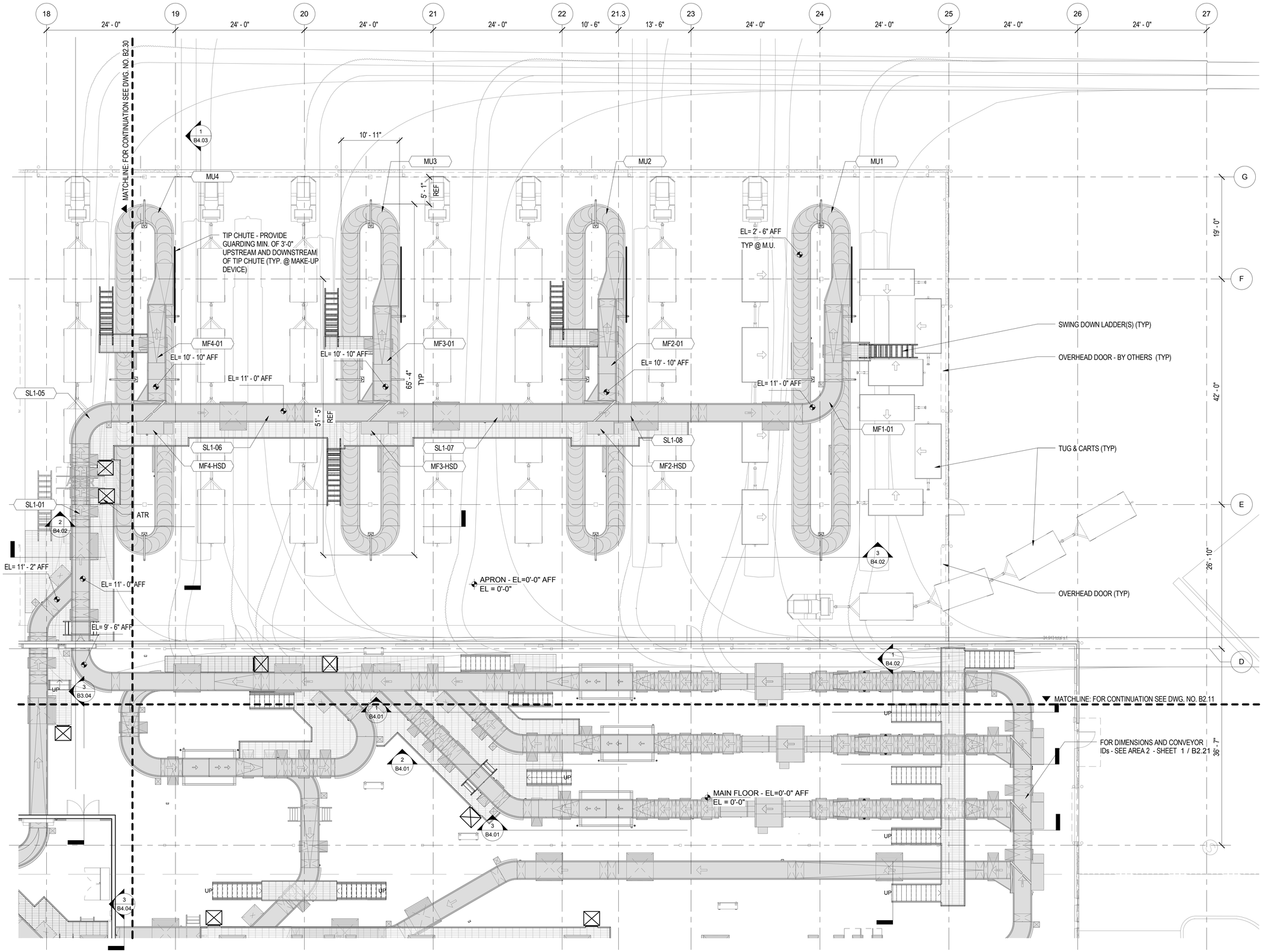

1 PROPOSED BHS LAYOUT - AREA 4

1/8" = 1'-0"

PLAN NORTH

LEGEND

CONVEYOR LEGEND

- NEW CONVEYORS INSTALLED
- EXISTING CONVEYORS
- CONVEYORS DEMOLISHED OR REMOVED

NOTES

BHS CONVEYOR NOTES:

ALL VERTICAL DIMENSIONS ARE REFERENCED ABOVE FINISHED FLOOR RELATIVE TO THE CURRENT FLOOR ELEVATION. REFER TO ARCHITECTURAL FLOOR ELEVATION. REFER TO ARCHITECTURAL AND CIVIL DRAWINGS FOR ACTUAL FLOOR GRADING AND ELEVATIONS. BHS CONTRACTOR TO FIELD VERIFY ALL FLOOR ELEVATIONS BEFORE BEGINNING WORK.

NOTE: FOR DIMENSIONS FOR CBIS AREA - SEE AREA 2 - SHEET B2.21

REFERENCES – BENCHMARK

DATE	REVISIONS	BY

CONSULTANT'S NAME

mijares ● mora
ARCHITECTS INC.
111 N. FESTIVAL
EL PASO, TEXAS 79912
TEL: 915-542-9660
FAX: 915-542-1594

ARCHITECT'S SEAL

STATE OF TEXAS
ASHER N. DAVID
119023
MAY 31, 2016
LICENSED
PROFESSIONAL ENGINEER

SCALE

DATE	MAY 2016
DESIGN BY	P.C.
DRAWN BY	P.C.
CHKD. BY	C.S.
APPD. BY	J.M.
JOB NO.	201370

PROJECT NAME

EL PASO INTERNATIONAL AIRPORT
CHECKED BAGGAGE INSPECTION SYSTEM

6701 CONVAIR ROAD EL PASO, TEXAS

EL PASO INTERNATIONAL AIRPORT

CITY OF EL PASO

SHEET TITLE

PROPOSED BHS PLAN – AREA 4

B2.40

FILE NO. 238512

SHEET OF

FOR BIDDING & PERMITTING ONLY, NOT FOR CONSTRUCTION PURPOSES.

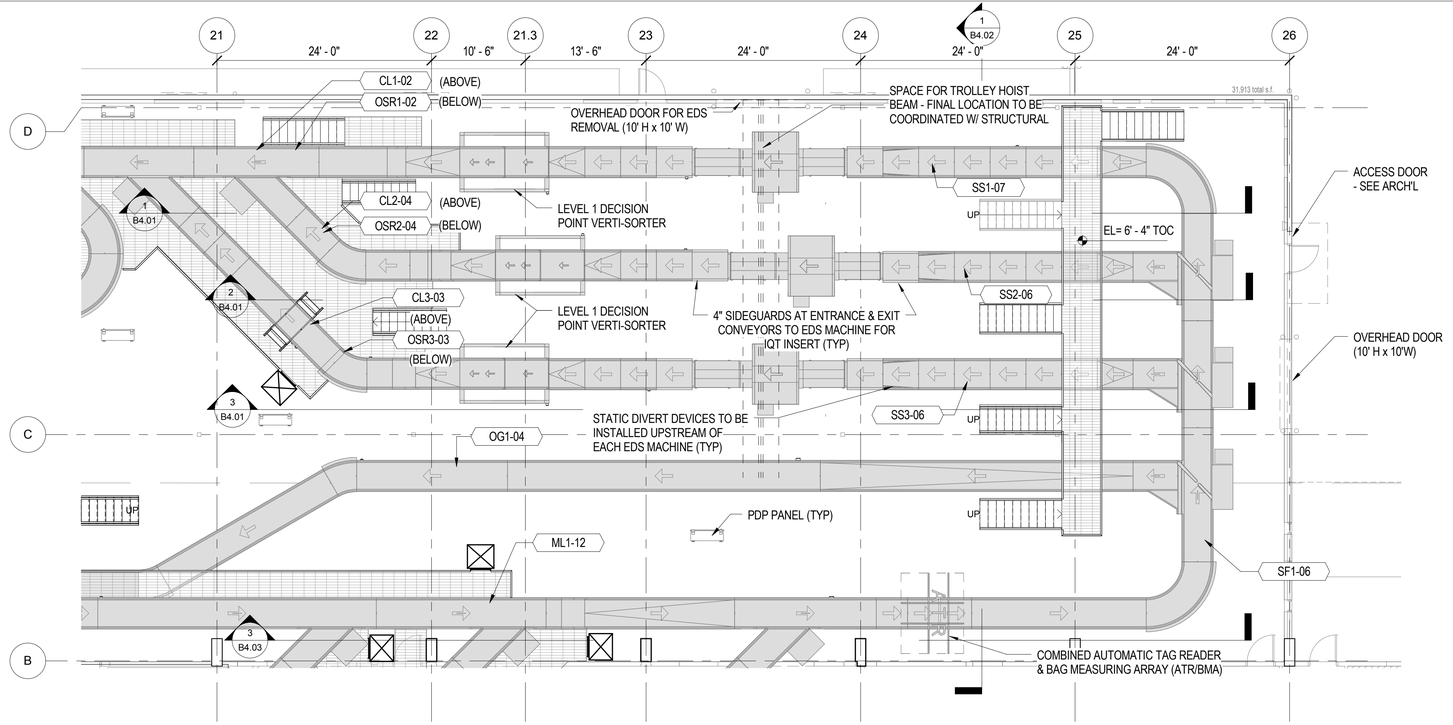

2 CBIS - ENLARGED PLAN
1/8" = 1'-0"

PLAN NORTH

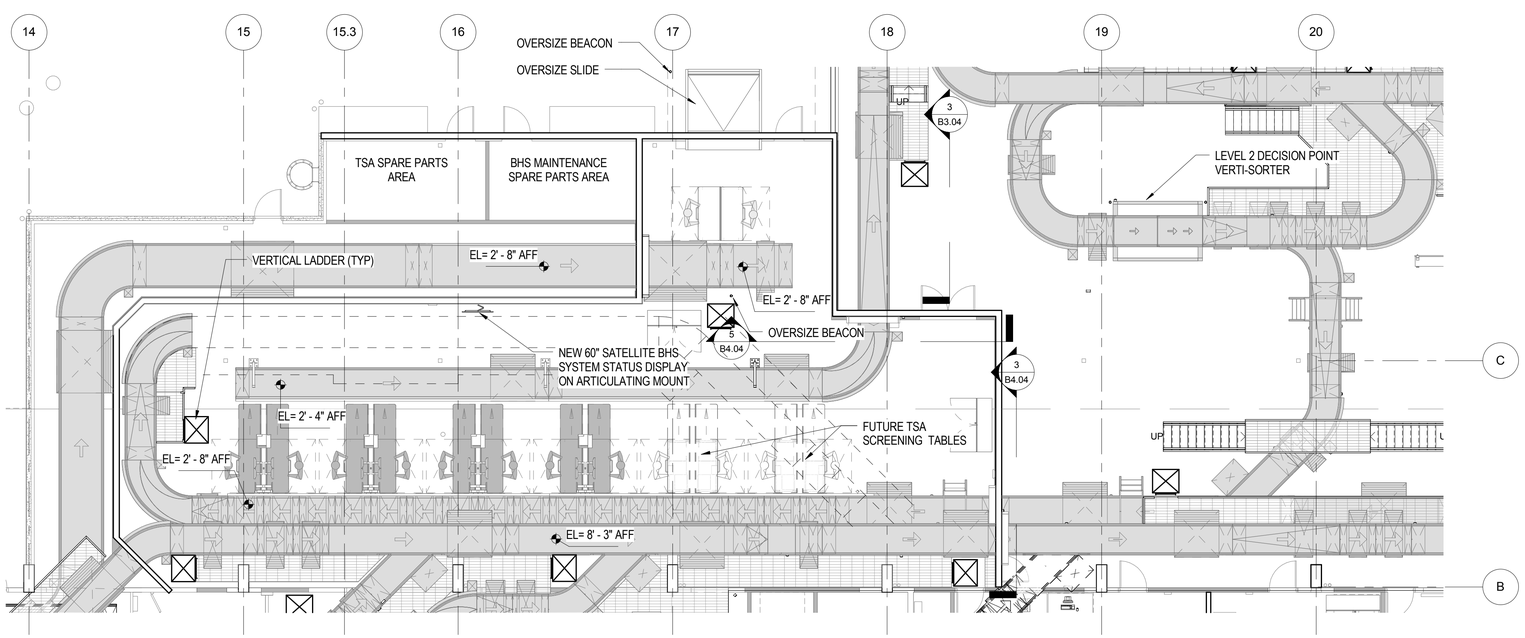

1 CBRA - ENLARGED PLAN
1/8" = 1'-0"

PLAN NORTH

BHS CBIS/CBRA EQUIPMENT LIST: TSA PROVIDED & INSTALLED

- L3 EXAMINER 3DX 6700 ES EXPLOSIVE DETECTION SYSTEM DEVICES (3) AND ALL RELATED NETWORK EQUIPMENT (PVS STATIONS, SVS STATIONS, RACKS, FIBER, PRINTER, IPLC, IQTK, ETC.) (REF. BHS SPEC & SCREENING EQUIPMENT INSTALLATION GUIDE)
- L3 EXAMINER 3DX 6700 ES ISD DEVICE UPS (REF. SCREENING EQUIPMENT INSTALLATION GUIDE) - FOR (3) EDS MACHINES
- ALL EXPLOSIVE TRACE DETECTION MACHINES (AT CBRA & OS SCREENING AREAS)
- NEDS AND OPTINET COMMUNICATION SERVER AND RACK (REF. SCREENING EQUIPMENT INSTALLATION GUIDE)
- OSR NETWORKED EDS THREAT RESOLUTION TOOLS
- CBRA TSA SUPERVISOR'S WORK STATION COMPUTER (REF. BHS SPECIFICATION)
- CBRA TSA SUPERVISOR'S MONITORS (REF. BHS SPECIFICATION)
- CBRA TSA SUPERVISOR'S REPORT PRINTER (REF. BHS SPECIFICATION)

BHS CBIS/CBRA EQUIPMENT LIST: BHSC PROVIDED & INSTALLED

- ALL CONVEYOR AND ASSOCIATED CONVEYOR MECHANICAL, ELECTRICAL AND CONTROL EQUIPMENT (INCLUDES AUTOMATIC TAG READERS AND BAG MEASURING ARRAYS) (REFERENCE BHS SPECIFICATIONS)
- LOW-PROFILE PHOTOEYES/REFLECTORS WITHIN THE CBRA & OS SCREENING AREAS (SEE ATTACHED DETAIL.)
- 10" TYPICAL BSD EQUIPMENT AND CONNECTIONS AT THE BIT FOR ALL MANNED STATIONS CBRA & OS (REF. BHS SPECIFICATIONS)
- SINGLE DYMO TYPE TAG PRINTER AT THE FIRST MANNED UPSTREAM QUEUE CONVEYOR ENTERING THE CBRA (REF. BHS SPECIFICATIONS)
- ALL CONVEYOR SHROUDING IN CBRA
- 5'-0" CBRA SLIDING TOP ETD TABLES (8)
- 5'-0" STANDARD TOP ETD OVERSIZE SCREENING TABLES (2) TOTAL
- HALF WALL WITH MOUNTING STANCHIONS (FOR SVSS, BSDS, ETDS, ETC.), RECEPTACLES, WIRING, AND CABLING IN CBRA AT EACH STATION.
- E-STOP CONTROLS AT ALL CBRA STATIONS
- BAGGAGE STATUS DISPLAY (BSD) MOUNTING STANCHIONS
- CBRA TSA 60" SYSTEM STATUS DISPLAY (REF. BHS SPECIFICATION FOR MDS DISPLAY)
- OSR TSA 42" SYSTEM STATUS DISPLAY (REF. BHS SPECIFICATION FOR MDS DISPLAY)
- QUICK DISCONNECT CONVEYORS ON LOCKABLE CASTERS UPSTREAM AND DOWNSTREAM OF EDS DEVICE
- SECURITY DOORS OR FIRE/SECURITY DOORS
- STAINLESS STEEL SLIDE AT OS SCREENING AREA

BHS CBIS/CBRA EQUIPMENT LIST: GENERAL CONTRACTOR PROVIDED & INSTALLED

- FULL FLOOR ANTI-FATIGUE COVERING
- ALL EQUIPMENT NECESSARY FOR CONDITIONED SPACE CBRA ROOM
- CCTV
- PHONES / COMMUNICATION DEVICES (AT CBRA & OS SCREENING LOCATIONS)
- DATA DROPS
- POWER AND RECEPTACLES, 480 VAC 3 PH DEFAULT FOR SCANNERS
- ELECTRICAL BOXES, MULTI-PLEX OUTLETS FOR ETDS, WORKSTATIONS, AND PERIPHERAL EQUIPMENT (ONE PER WORKSTATION, I.E. TWO PER SHARED HALF WALL/POWER WALL)
- CBRA TSA SUPERVISORS DESK (REF. BHS SPECIFICATION)
- OSR WORKSTATION DESKS ((3) TOTAL FOR OSR ROOM)
- ALL FURNITURE AND MDS WORKSTATION DESK INSIDE BHS CONTROL ROOM /SERVER ROOM.

LEGEND

NOTES

REFERENCES - BENCHMARK

DATE	REVISIONS	BY

CONSULTANT'S NAME

mijares ● mora
ARCHITECTS INC.
111 N. FESTIVAL
EL PASO, TEXAS 79912
TEL: 915-542-1989
FAX: 915-542-1994

ARCHITECT'S SEAL

STATE OF TEXAS
ASHER N. DAVID
119923
MAY 31, 2016
LICENSED
PROFESSIONAL ENGINEER

SCALE

DATE	MAY 2016
DESIGN BY	P.C.
DRAWN BY	P.C.
CHKD. BY	C.S.
APPD. BY	J.M.
JOB NO.	201370

PROJECT NAME

EL PASO INTERNATIONAL AIRPORT
CHECKED BAGGAGE INSPECTION SYSTEM

6701 CONVAIR ROAD EL PASO, TEXAS

EL PASO INTERNATIONAL AIRPORT

CITY OF EL PASO

SHEET TITLE

ENLARGED CBIS/CBRA PLAN

B3.01

FILE NO. 238512

SHEET OF

FOR BIDDING & PERMITTING ONLY, NOT FOR CONSTRUCTION PURPOSES.

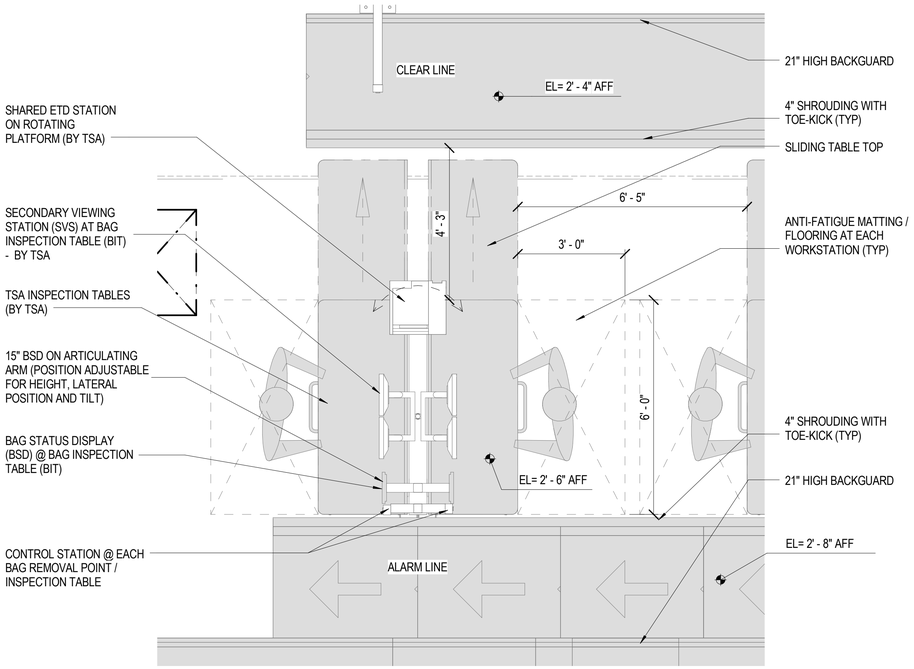

2 DETAIL PLAN - TYPICAL CBRA WORSTATION
1/2" = 1'-0"

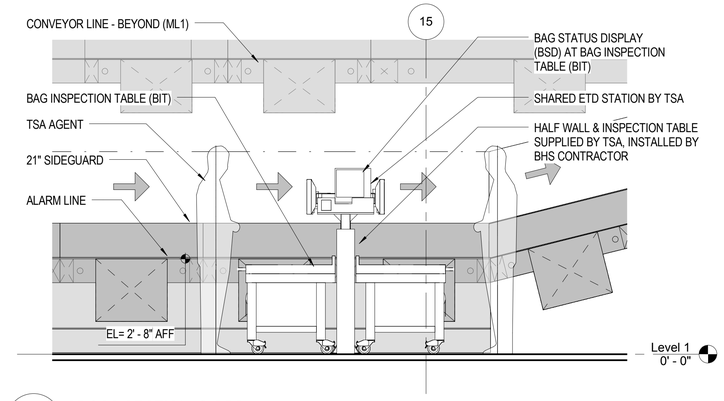

4 CROSS SECTION @ BRP
1/2" = 1'-0"

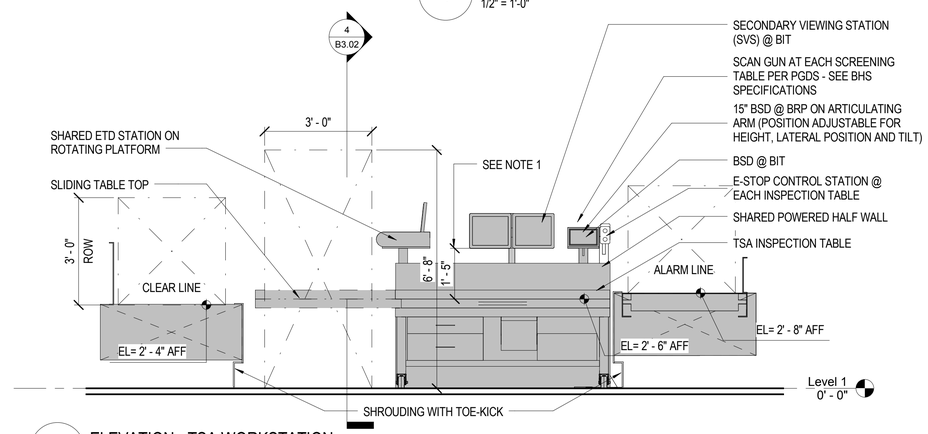

3 ELEVATION - TSA WORKSTATION
1/2" = 1'-0"

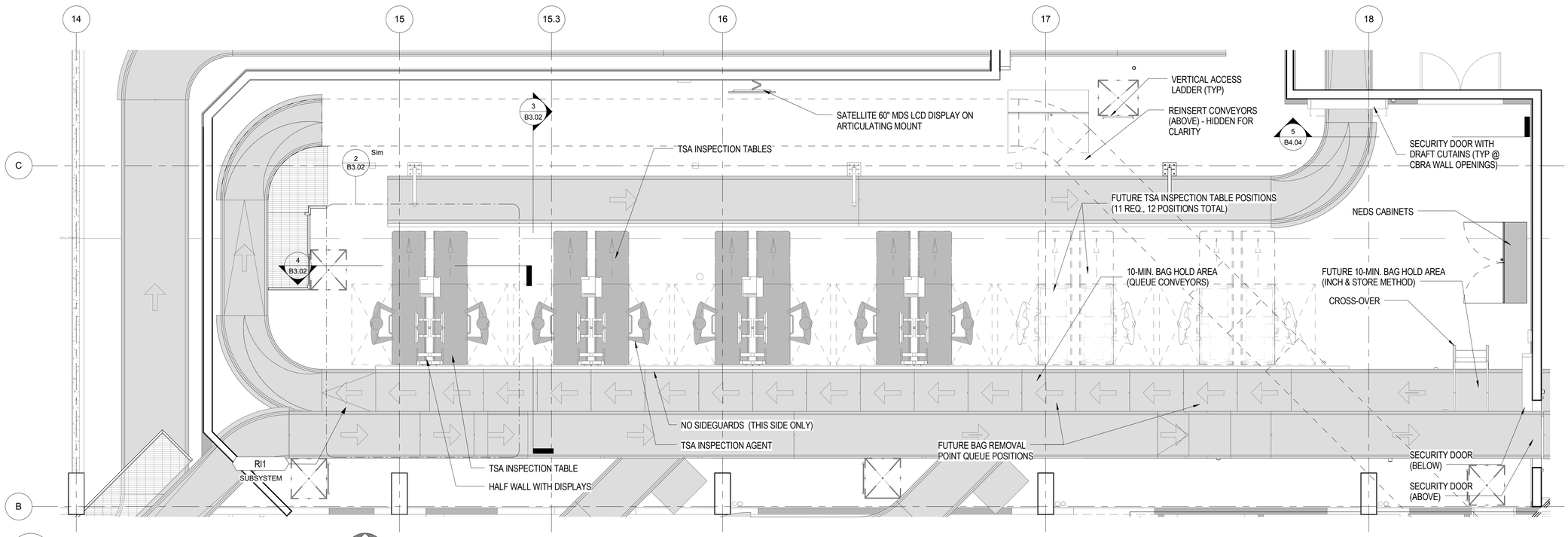

1 CBRA - ENLARGED PLAN - DETAIL PLAN
1/4" = 1'-0"

LEGEND

NOTES

GENERAL NOTES:

1. BSD @ BIT TO BE 17" - 20" ABOVE WORKING SURFACE PER PGDS 5.0

REFERENCES - BENCHMARK

DATE	REVISIONS	BY

CONSULTANT'S NAME

mijares ● mora
ARCHITECTS INC.
111 N. FESTIVAL
EL PASO, TEXAS 79912
TEL: 915-542-1989
FAX: 915-542-1994

ARCHITECT'S SEAL

STATE OF TEXAS
ASHER N. DAVID
119923
MAY 31, 2016
LICENSED
PROFESSIONAL ENGINEER

SCALE

DATE	MAY 2016
DESIGN BY	P.C.
DRAWN BY	P.C.
CHKD. BY	C.S.
APPD. BY	J.M.
JOB NO.	201370

PROJECT NAME

EL PASO INTERNATIONAL AIRPORT
CHECKED BAGGAGE INSPECTION SYSTEM

6701 CONVAIR ROAD

EL PASO, TEXAS

EL PASO INTERNATIONAL AIRPORT

CITY OF EL PASO

SHEET TITLE

DETAIL PLAN – ENLARGED CBRA PLAN

B3.02

FILE NO. 238512

SHEET OF

FOR BIDDING & PERMITTING ONLY, NOT FOR CONSTRUCTION PURPOSES.

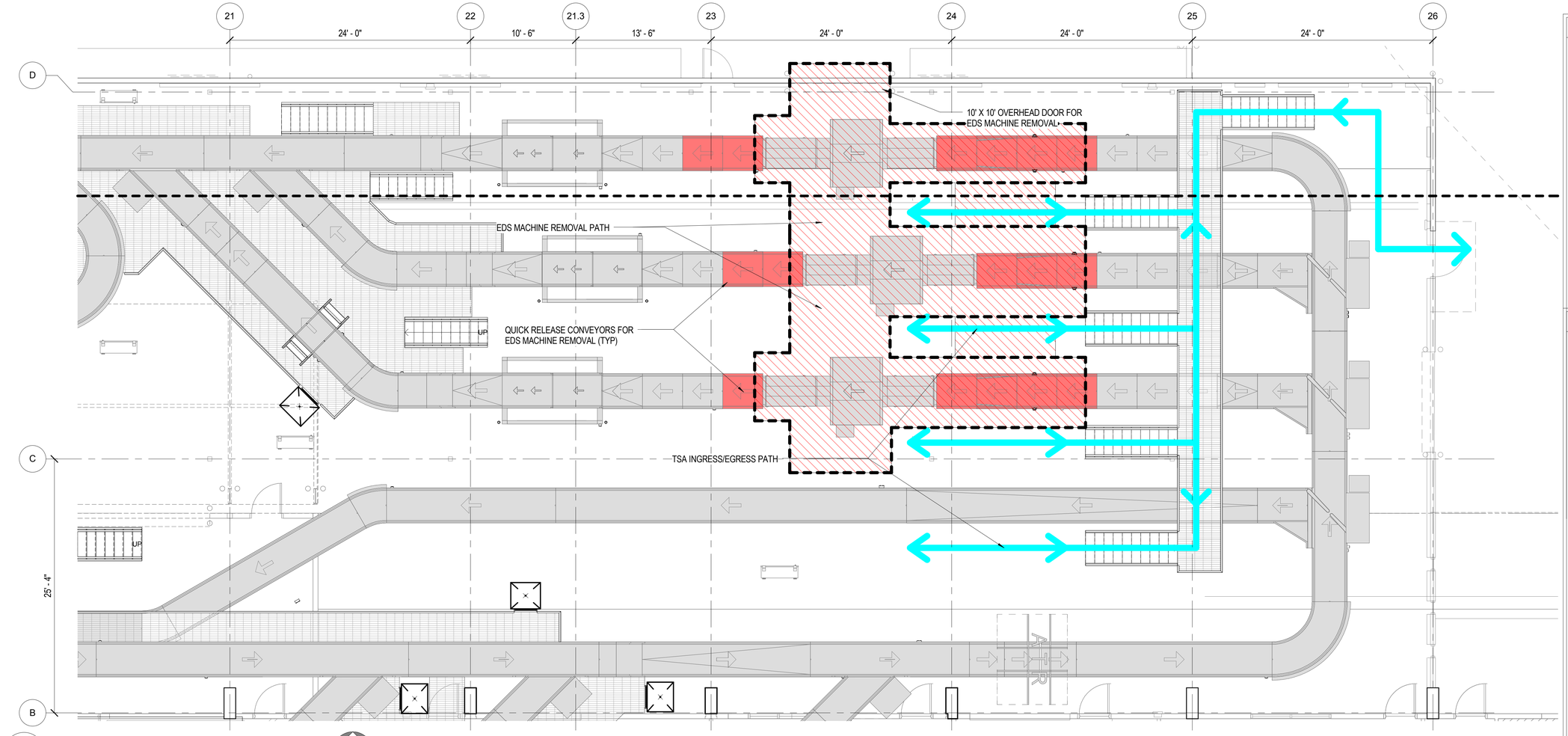

1 ENLARGED PLAN - EDS REMOVAL PATH
3/16" = 1'-0"

PLAN NORTH

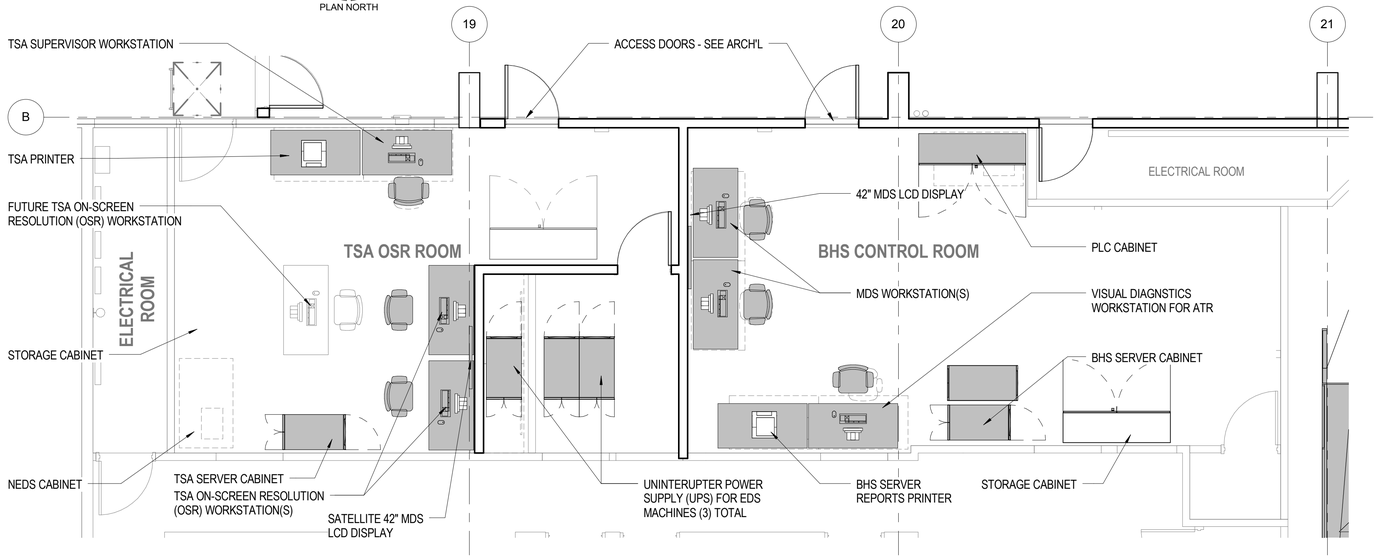

3 B2.00 OSR/BHS CONTROL ROOMS - ENLARGED PLAN
1/4" = 1'-0"

PLAN NORTH

NOTE: SEE ARCHITECTURAL PLANS FOR FINAL OSR ROOM & BHS CONTROL ROOM CONFIGURATION

LEGEND

CONVEYOR LEGEND

- QUICK RELEASE CONVEYORS
- EDS MACHINE REMOVAL PATH
- TSA PERSONNEL EGRESS/ INGRESS PATH

NOTES

REFERENCES – BENCHMARK

DATE	REVISIONS	BY

CONSULTANT'S NAME

mijares ● mora
ARCHITECTS INC.
111 N. FESTIVAL
EL PASO, TEXAS 79912
TEL: 915-542-1989
FAX: 915-542-1994

ARCHITECT'S SEAL

STATE OF TEXAS
ASHER N. DAVID
119923
MAY 31, 2016
LICENSED
PROFESSIONAL ENGINEER

SCALE

DATE	MAY 2016
DESIGN BY	P.C.
DRAWN BY	P.C.
CHKD. BY	C.S.
APPD. BY	J.M.
JOB NO.	201370

PROJECT NAME

EL PASO INTERNATIONAL AIRPORT
CHECKED BAGGAGE INSPECTION SYSTEM

6701 CONVAIR ROAD EL PASO, TEXAS

EL PASO INTERNATIONAL AIRPORT

CITY OF EL PASO

SHEET TITLE

OSR & BHS CONTROL ROOMS AND EDS REMOVAL PATH

B3.03

FILE NO. 238512

SHEET OF

FOR BIDDING & PERMITTING ONLY, NOT FOR CONSTRUCTION PURPOSES.

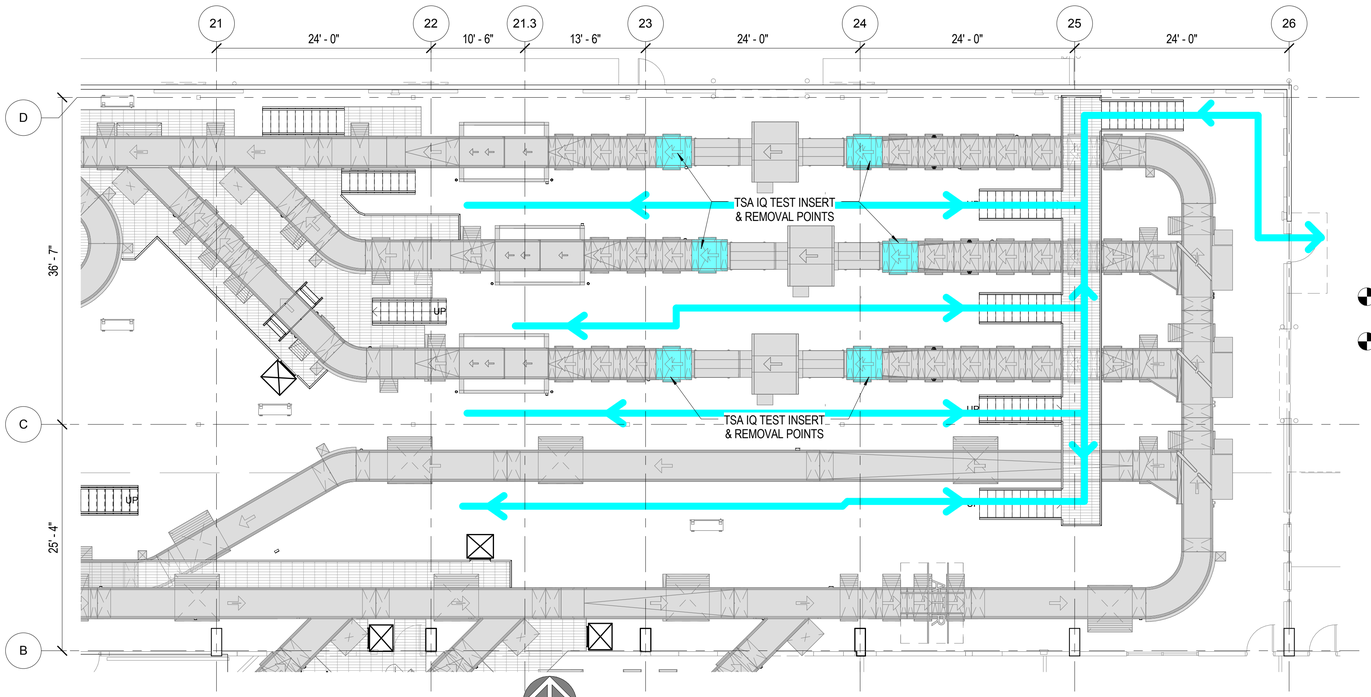

1 CBIS - ENLARGED PLAN - TSA INGRESS/EGRESS
1/8" = 1'-0"

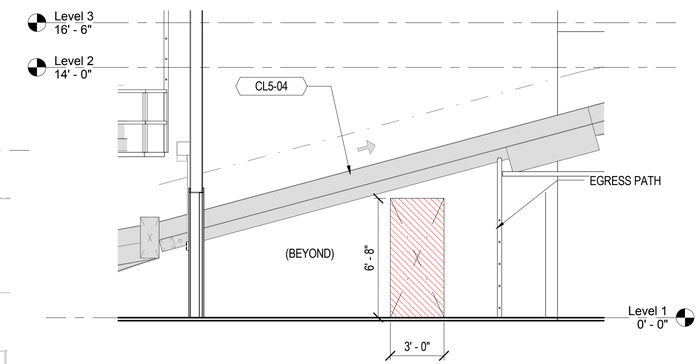

3 B2.12 SECTION @ TSA EGRESS PATH
1/4" = 1'-0"

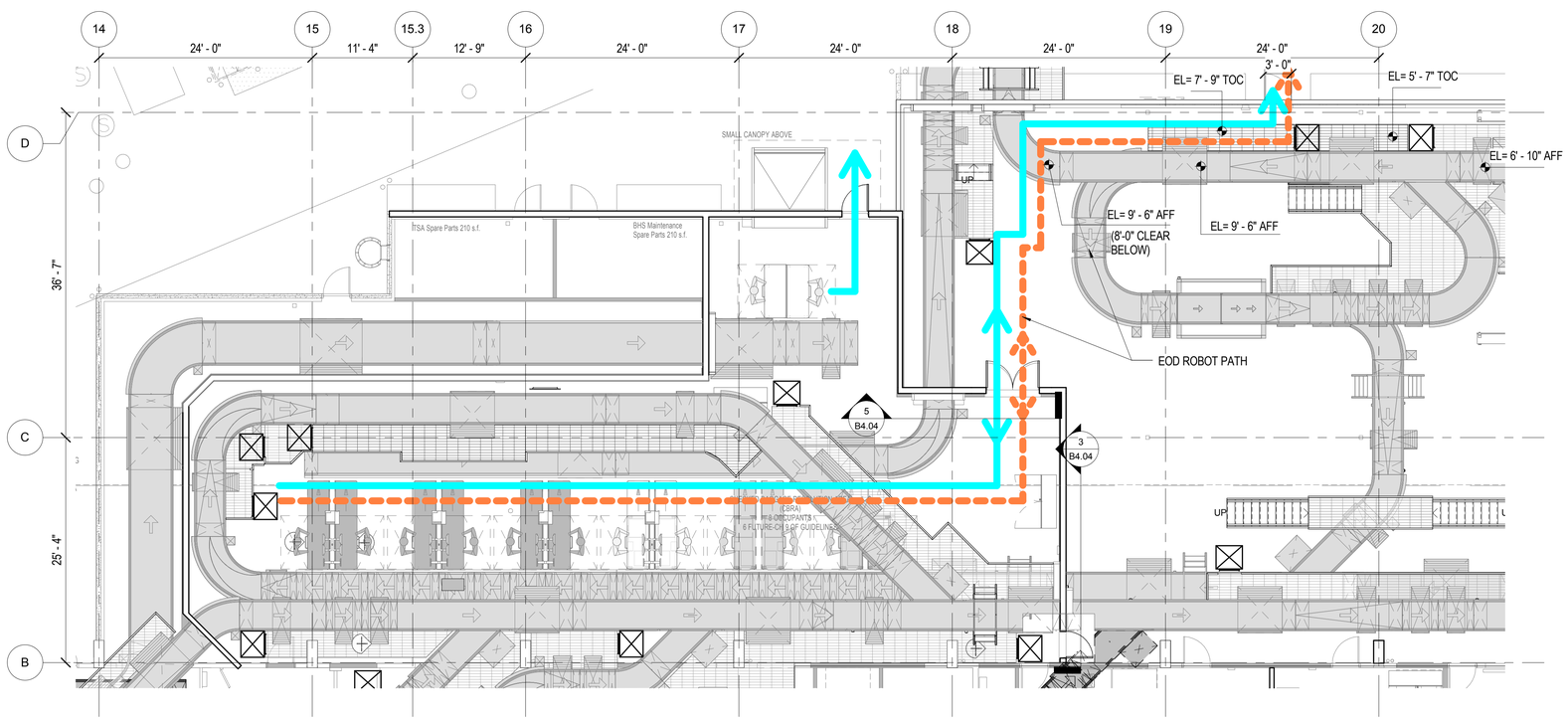

2 CBRA - ENLARGED PLAN - TSA INGRESS/EGRESS
1/8" = 1'-0"

PLAN NORTH

LEGEND

CONVEYOR LEGEND

- IQ TEST INPUT CONVEYORS
- TSA PERSONNEL EGRESS/ INGRESS PATH
- EOD ROBOT PATH

NOTES

REFERENCES – BENCHMARK

DATE	REVISIONS	BY

CONSULTANT'S NAME

mijares ● mora
ARCHITECTS INC.
111 N. FESTIVAL
EL PASO, TEXAS 79912
TEL: 915-542-1989
FAX: 915-542-1594

ARCHITECT'S SEAL

STATE OF TEXAS
ASHER N. DAVID
119023
MAY 31, 2016
LICENSED
PROFESSIONAL ENGINEER

SCALE

DATE	MAY 2016
DESIGN BY	P.C.
DRAWN BY	P.C.
CHKD. BY	C.S.
APPD. BY	J.M.
JOB NO.	201370

PROJECT NAME

EL PASO INTERNATIONAL AIRPORT
CHECKED BAGGAGE INSPECTION SYSTEM
6701 CONVAIR ROAD
EL PASO, TEXAS

EL PASO INTERNATIONAL AIRPORT

CITY OF EL PASO

SHEET TITLE
TSA IQ POINTS & EGRESS PATH

B3.04
FILE NO. 238512
SHEET OF

FOR BIDDING & PERMITTING ONLY, NOT FOR CONSTRUCTION PURPOSES.

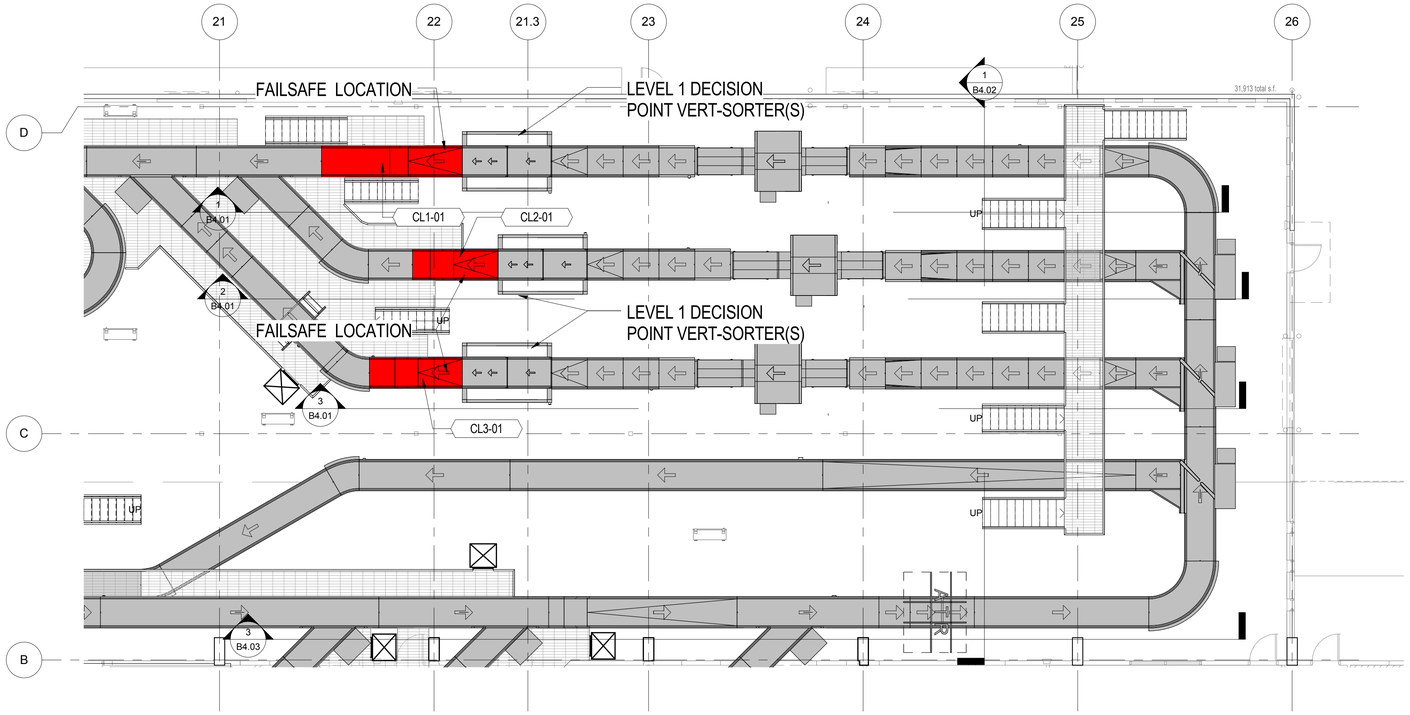

1 CBIS - ENLARGED PLAN - FAILSAFE REMOVAL POINTS
1/8" = 1'-0"

PLAN NORTH

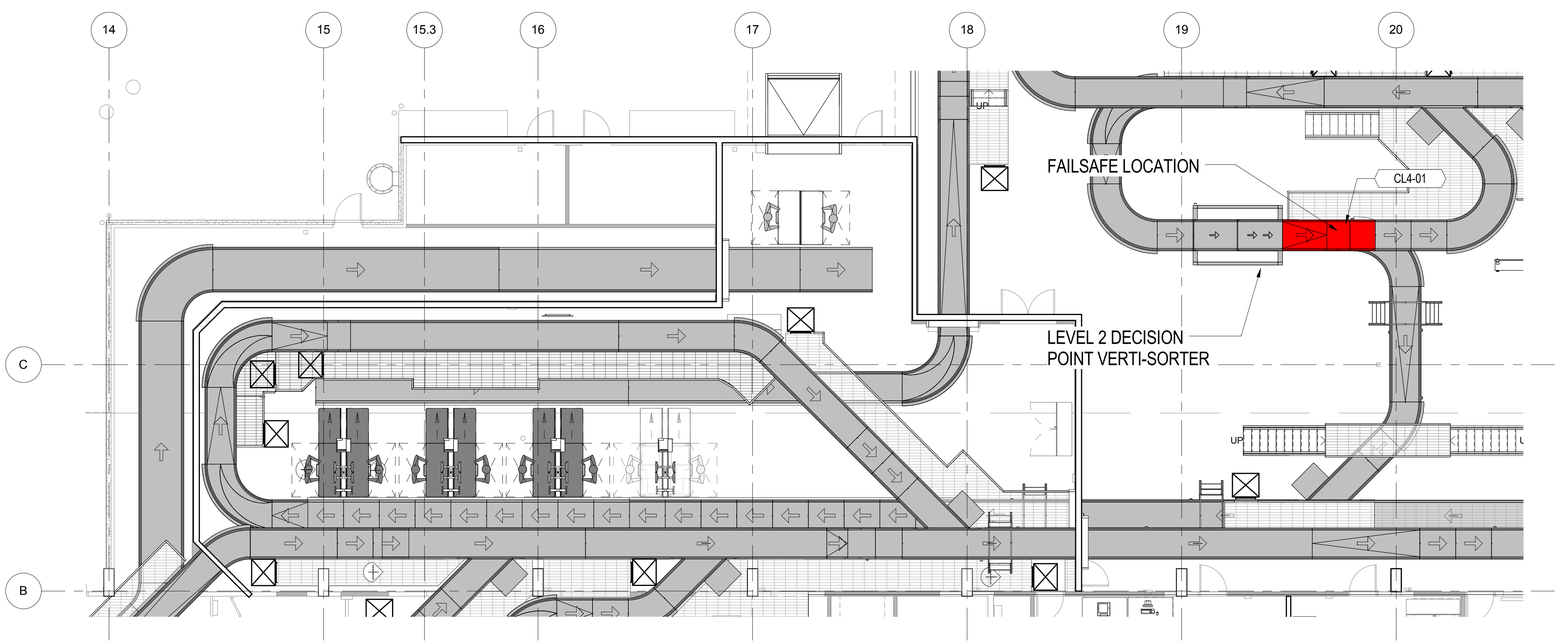

2 CBRA - ENLARGED PLAN - FAILSAFE REMOVAL POINT
1/8" = 1'-0"

PLAN NORTH

LEGEND

CONVEYOR LEGEND

FAILSAFE REMOVAL POINT CONVEYORS

NOTES

REFERENCES – BENCHMARK

DATE	REVISIONS	BY

CONSULTANTS NAME

mijares ● mora
ARCHITECTS INC.
111 N. FESTIVAL
EL PASO, TEXAS 79912
TEL: 915-542-9981
FAX: 915-542-1594

ARCHITECT'S SEAL

STATE OF TEXAS
ASHER N. DAVID
119023
MAY 31, 2016
LICENSED
PROFESSIONAL ENGINEER

SCALE

DATE	MAY 2016
DESIGN BY	P.C.
DRAWN BY	P.C.
CHKD. BY	C.S.
APPD. BY	J.M.
JOB NO.	201370

PROJECT NAME

EL PASO INTERNATIONAL AIRPORT
CHECKED BAGGAGE INSPECTION SYSTEM

6701 CONVAIR ROAD EL PASO, TEXAS

EL PASO INTERNATIONAL AIRPORT

CITY OF EL PASO

SHEET TITLE

FAIL SAFE REMOVAL POINTS

B3.05

FILE NO. 238512

SHEET OF

FOR BIDDING & PERMITTING ONLY, NOT FOR CONSTRUCTION PURPOSES.

BIT SCREEN 1: Initial screen after valid bag blocks PE at an enabled BIT

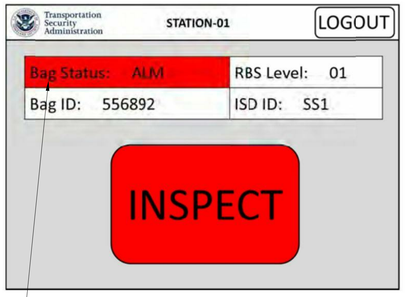

PRIMARY BSD STATUS

BIT SCREEN 2: Shown when an error bag arrives at the BRP

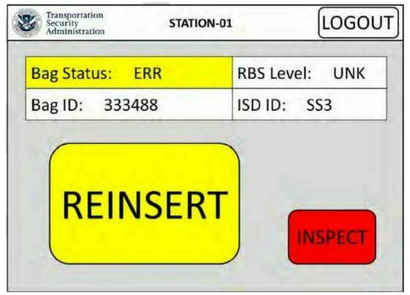

BIT SCREEN 3: Display after transferring an Alarm bag to an enabled BIT

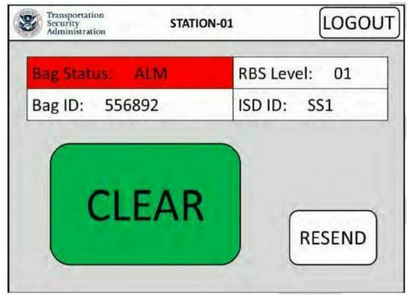

BIT SCREEN 4: Display for Out-of-Gauge Baggage

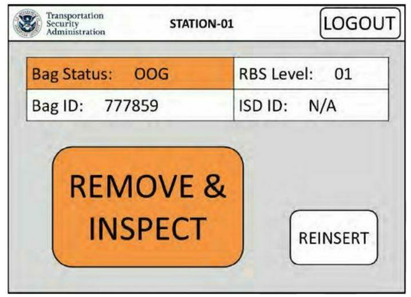

BIT SCREEN 5: Display for Clear bag at BRP

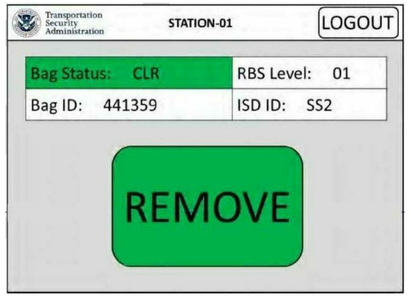

BIT SCREEN 6: Display after transferring a Clear bag to an enabled BIT

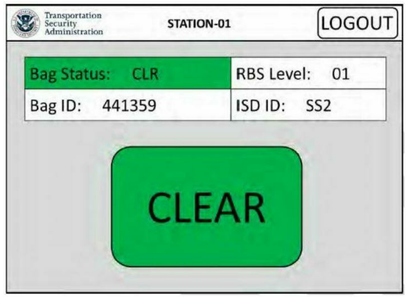

BIT SCREEN 7: Initial screen for an enabled BIT with no blocked PE

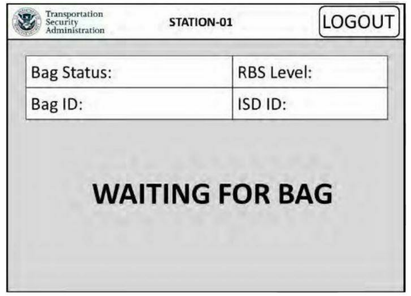

BIT SCREEN 8: Displayed for all disabled BSDs

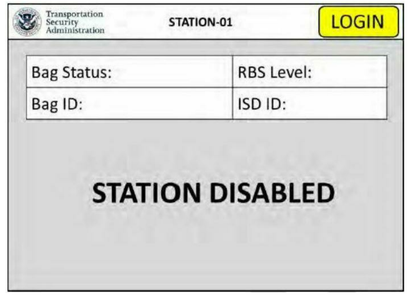

BIT SCREEN 9: Station login screen

BIT SCREEN 10: Admin Screen

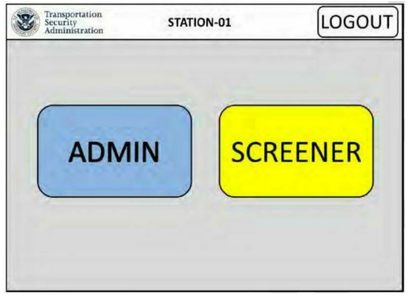

BIT SCREEN 11: Add new user screen

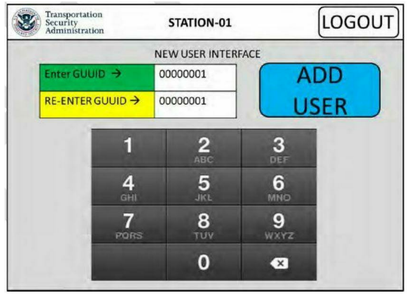

BIT SCREEN 12: Display for a BHS unknown bag at BRP

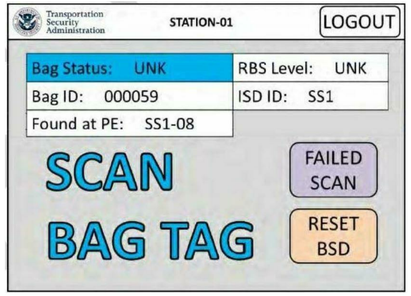

BIT SCREEN 13: AQM Manual Reinsert bag screen

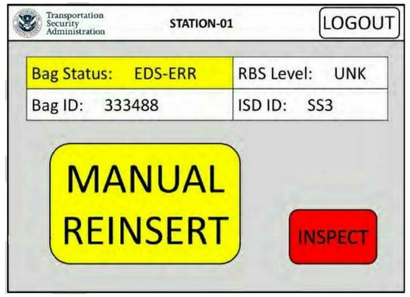

BIT SCREEN 14: Bag Waiting Alert for Alarm Bag

BIT SCREEN 15: AQM Reinsert bag screen

BIT SCREEN 16: BHS Unknown Reinsert Bag screen

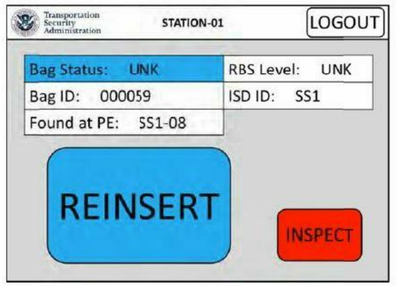

1 CBRA DETAILS - BSD SCREEN SHOTS

REFERENCES – BENCHMARK

DATE	REVISIONS	BY

CONSULTANT'S NAME

mijares ● mora
ARCHITECTS INC.
111 N. FESTIVAL
EL PASO, TEXAS 79912
TELEPHONE: 915-542-1589
FAX: 915-542-1594

ARCHITECT'S SEAL

STATE OF TEXAS
ASHER N. DAVID
119023
MAY 31, 2016
LICENSED
PROFESSIONAL ENGINEER

SCALE

DATE	MAY 2016
DESIGN BY	P.C.
DRAWN BY	P.C.
CHKD. BY	C.S.
APPD. BY	J.M.
JOB NO.	201370

PROJECT NAME

EL PASO INTERNATIONAL AIRPORT
CHECKED BAGGAGE INSPECTION SYSTEM

EL PASO, TEXAS

6701 CONVAIR ROAD

EL PASO INTERNATIONAL AIRPORT

CITY OF EL PASO

SHEET TITLE

BHS DETAIL PLANS – CBRA – BSD SCREEN SHOTS

B3.06

FILE NO. 238512

SHEET OF

FOR BIDDING & PERMITTING ONLY, NOT FOR CONSTRUCTION PURPOSES.

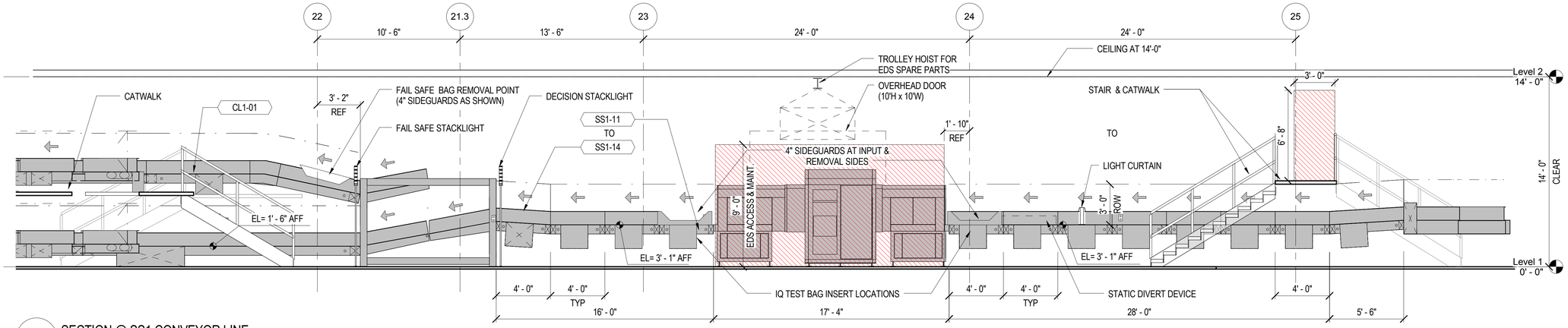

1 B2.21 SECTION @ SS1 CONVEYOR LINE
1/4" = 1'-0"

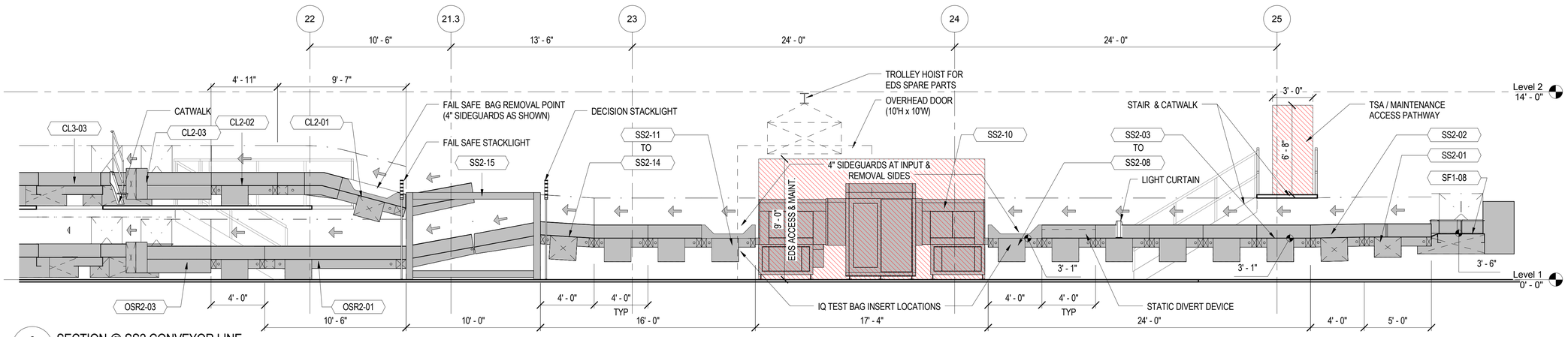

2 B2.21 SECTION @ SS2 CONVEYOR LINE
1/4" = 1'-0"

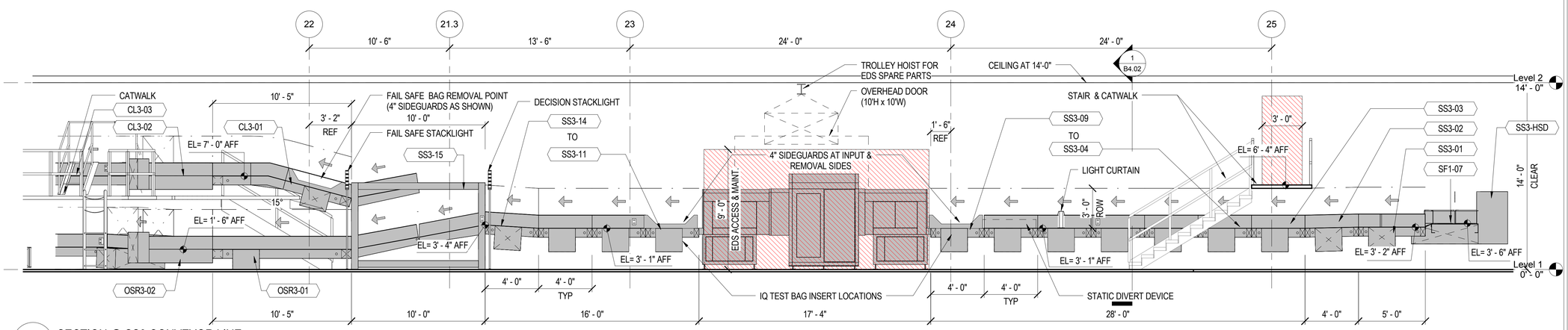

3 B2.21 SECTION @ SS3 CONVEYOR LINE
1/4" = 1'-0"

LEGEND

NOTES

ALL VERTICAL DIMENSIONS ARE REFERENCED ABOVE FINISHED FLOOR RELATIVE TO THE CURRENT FLOOR ELEVATION.

REFERENCES – BENCHMARK

DATE	REVISIONS	BY

CONSULTANT'S NAME

mijares ● mora
ARCHITECTS INC.
111 N. FESTIVAL
EL PASO, TEXAS 79912
TEL: 915-542-1989
FAX: 915-542-1594

ARCHITECT'S SEAL

STATE OF TEXAS
ASHER N. DAVID
119923
MAY 31, 2016
LICENSED
PROFESSIONAL ENGINEER

SCALE

DATE	MAY 2016
DESIGN BY	P.C.
DRAWN BY	P.C.
CHKD. BY	C.S.
APPD. BY	J.M.
JOB NO.	201370

PROJECT NAME

EL PASO INTERNATIONAL AIRPORT
CHECKED BAGGAGE INSPECTION SYSTEM

EL PASO, TEXAS

6701 CONVAIR ROAD

EL PASO INTERNATIONAL AIRPORT

CITY OF EL PASO

SHEET TITLE

BHS SECTIONS

B4.01

FILE NO. 238512

SHEET OF

FOR BIDDING & PERMITTING ONLY, NOT FOR CONSTRUCTION PURPOSES.

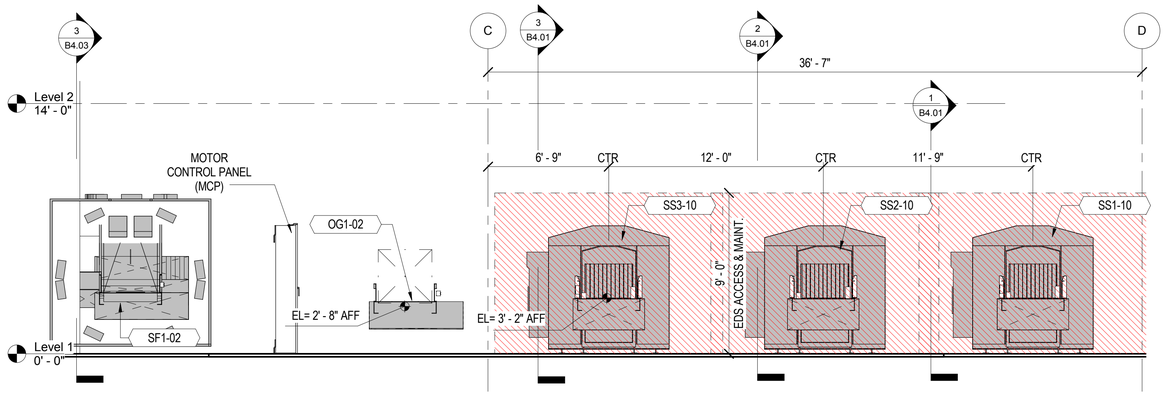

1 B2.21 SECTION @ EDS MACHINES
1/4" = 1'-0"

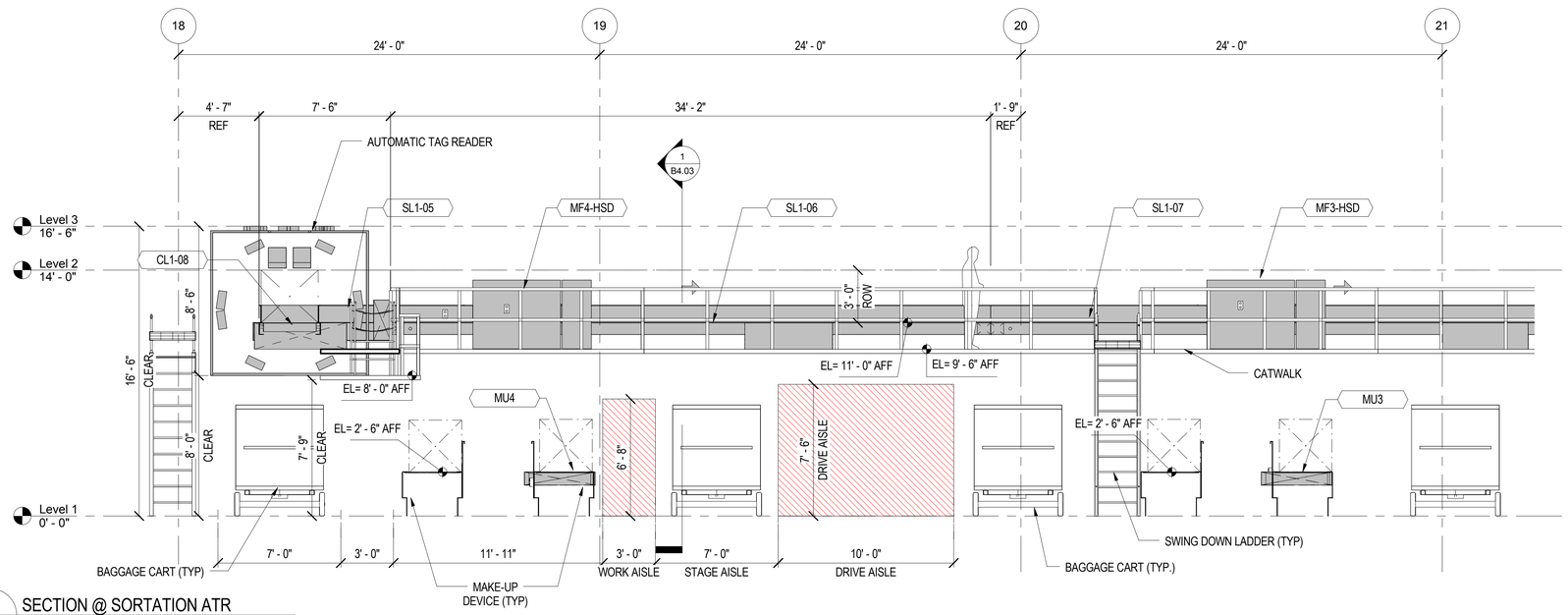

2 B2.30 SECTION @ SORTATION ATR
1/4" = 1'-0"

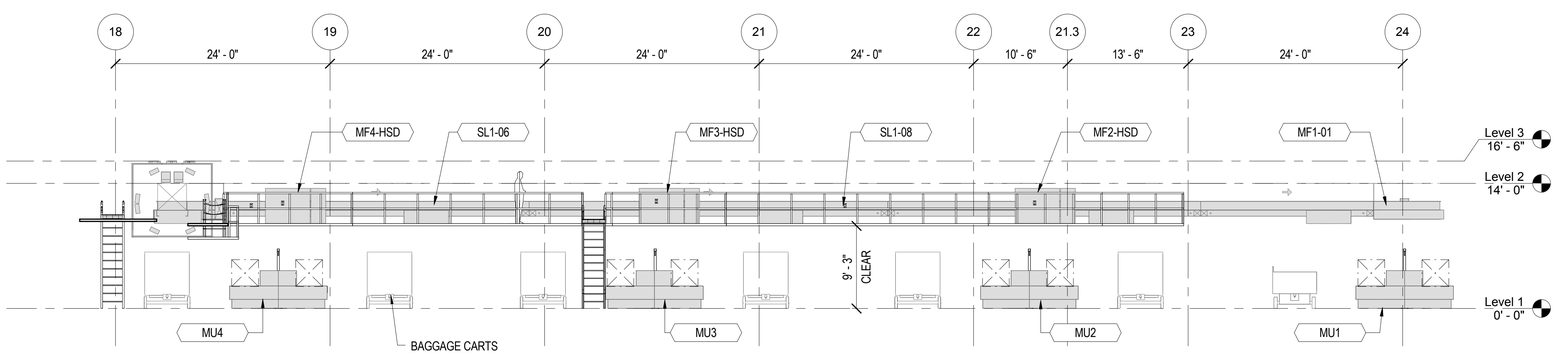

3 B2.30 SECTION @ SORTATION MAIN LINE
1/8" = 1'-0"

LEGEND

NOTES

ALL VERTICAL DIMENSIONS ARE REFERENCED ABOVE FINISHED FLOOR RELATIVE TO THE CURRENT FLOOR ELEVATION.

REFERENCES – BENCHMARK

DATE	REVISIONS	BY

CONSULTANT'S NAME

mijares ● mora
ARCHITECTS INC.
111 N. FESTIVAL
EL PASO, TEXAS 79912
TELEPHONE: 915-542-1989
FAX: 915-542-1594

ARCHITECT'S SEAL

STATE OF TEXAS
ASHER N. DAVID
119023
MAY 31, 2016
LICENSED
PROFESSIONAL ENGINEER

SCALE

DATE	MAY 2016
DESIGN BY	P.C.
DRAWN BY	P.C.
CHKD. BY	C.S.
APPD. BY	J.M.
JOB NO.	201370

PROJECT NAME

EL PASO INTERNATIONAL AIRPORT
CHECKED BAGGAGE INSPECTION SYSTEM

6701 CONVAIR ROAD EL PASO, TEXAS

EL PASO INTERNATIONAL AIRPORT

CITY OF EL PASO

SHEET TITLE
BHS SECTIONS

B4.02
FILE NO. 238512
SHEET OF

FOR BIDDING & PERMITTING ONLY, NOT FOR CONSTRUCTION PURPOSES.

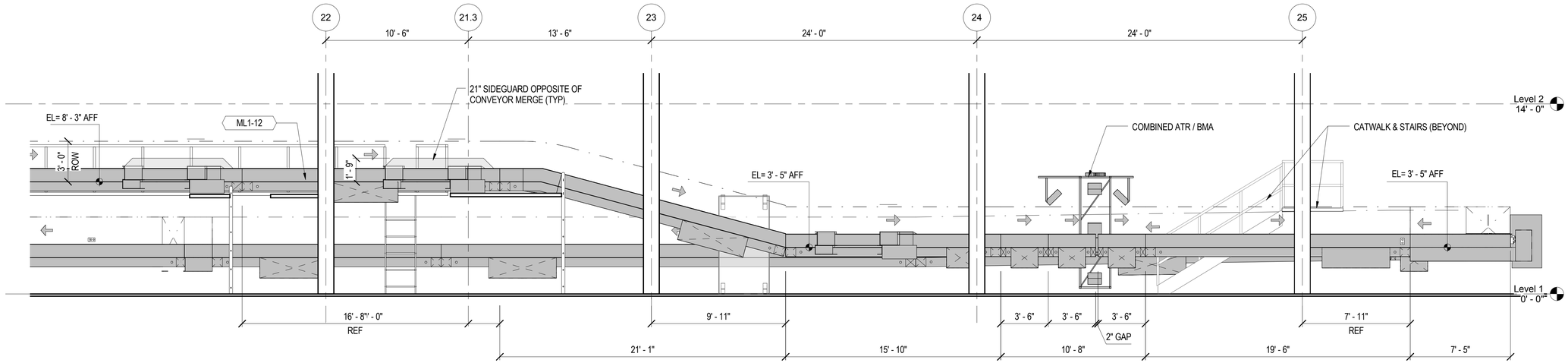

3 / B2.21 SECTION @ ML1 CONVEYOR LINE
1/4" = 1'-0"

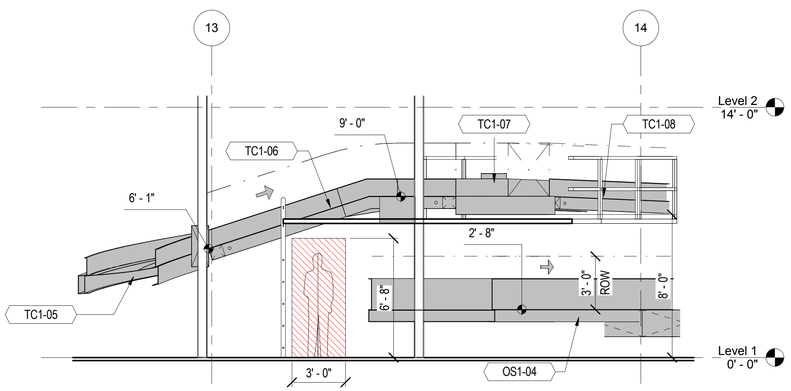

2 / B2.11 SECTION @ OVERSIZE PATH
1/4" = 1'-0"

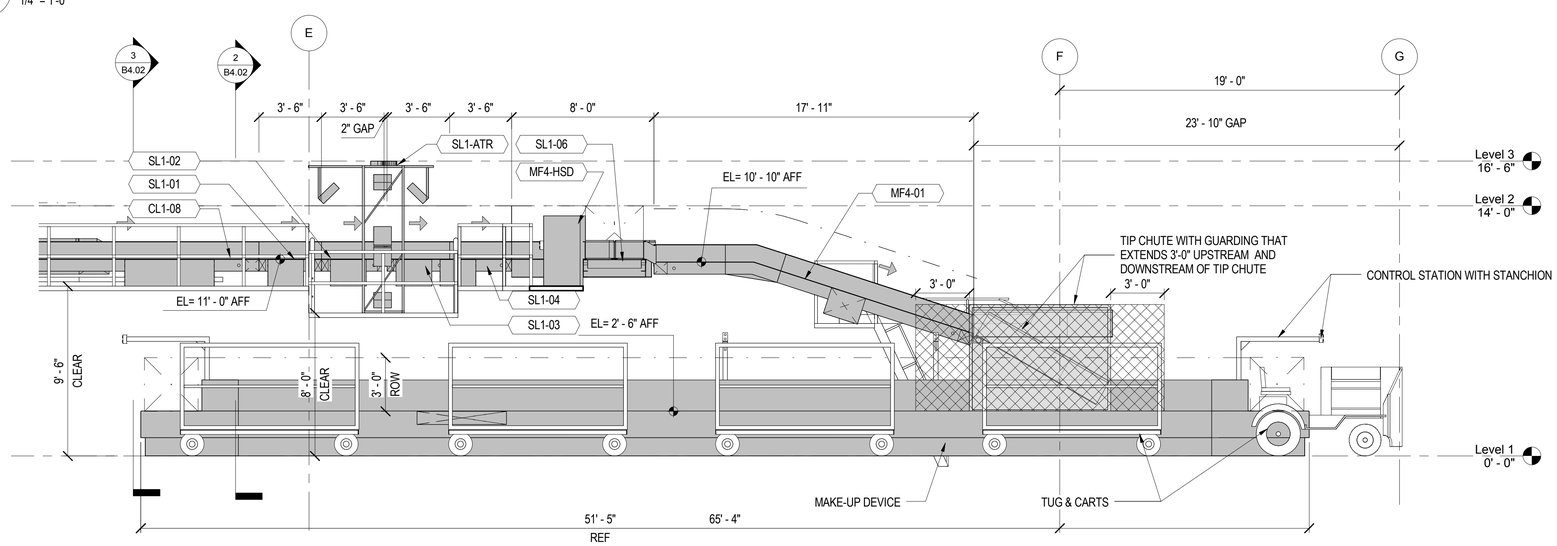

1 / B2.40 SECTION @ MAKE-UP DEVICE
1/4" = 1'-0"

LEGEND

NOTES

ALL VERTICAL DIMENSIONS ARE REFERENCED ABOVE FINISHED FLOOR RELATIVE TO THE CURRENT FLOOR ELEVATION.

REFERENCES – BENCHMARK

DATE	REVISIONS	BY

CONSULTANT'S NAME

mijares ● mora
ARCHITECTS INC.
111 N. TESTVAL
EL PASO, TEXAS 79912
TEL: 915-542-1980
FAX: 915-542-1994

ARCHITECT'S SEAL

STATE OF TEXAS
ASHER N. DAVID
119923
MAY 31, 2016
LICENSED
PROFESSIONAL ENGINEER

SCALE

DATE	MAY 2016
DESIGN BY	P.C.
DRAWN BY	P.C.
CHKD. BY	C.S.
APPD. BY	J.M.
JOB NO.	201370

PROJECT NAME

EL PASO INTERNATIONAL AIRPORT
CHECKED BAGGAGE INSPECTION SYSTEM

6701 CONVAIR ROAD — EL PASO, TEXAS

EL PASO INTERNATIONAL AIRPORT

CITY OF EL PASO

SHEET TITLE
BHS SECTIONS

B4.03
FILE NO. 238512
SHEET OF

FOR BIDDING & PERMITTING ONLY, NOT FOR CONSTRUCTION PURPOSES.

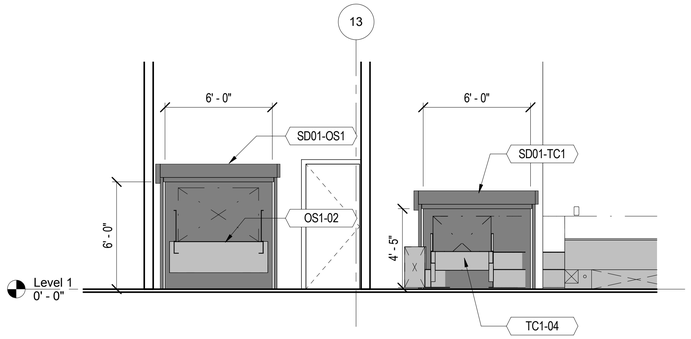

1 / B2.12 SECTION @ OS1 & TC1 - DOOR OPENINGS
1/4" = 1'-0"

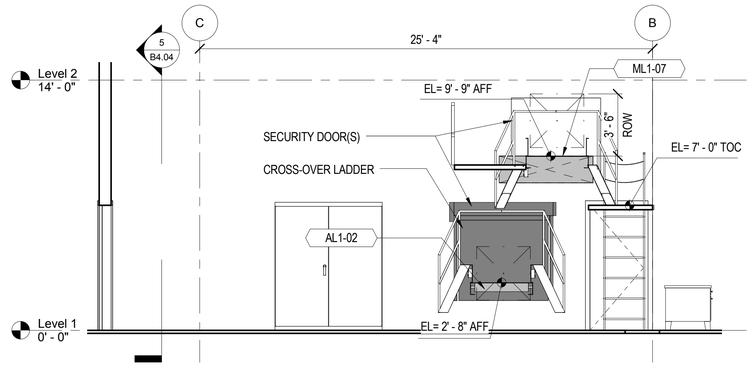

4 / B2.12 SECTION @ AL1 - CROSS-OVER
1/4" = 1'-0"

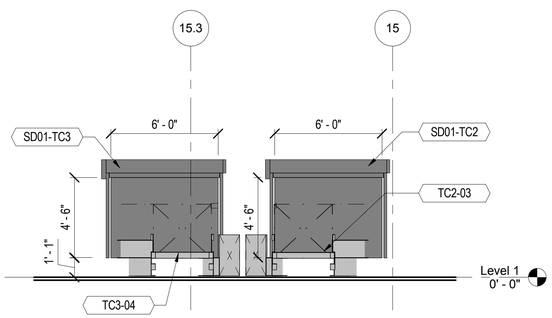

2 / B2.11 SECTION @ TC2 & TC3 - DOOR OPENINGS
1/4" = 1'-0"

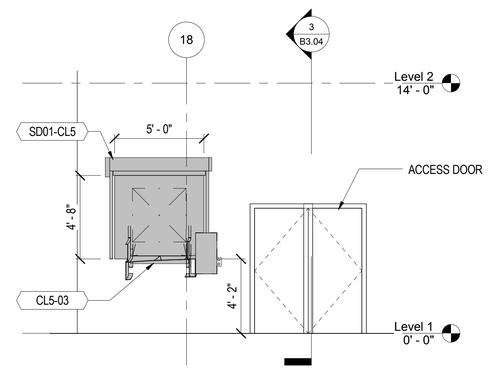

5 / B2.11 SECTION @ CL5 - DOOR OPENING
1/4" = 1'-0"

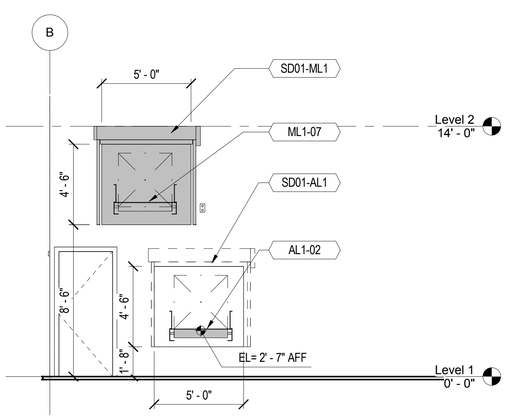

3 / B2.11 SECTION @ AL1-ML1 - DOOR OPENINGS
1/4" = 1'-0"

LEGEND

NOTES

ALL VERTICAL DIMENSIONS ARE REFERENCED ABOVE FINISHED FLOOR RELATIVE TO THE CURRENT FLOOR ELEVATION.

KEY PLAN

REFERENCES – BENCHMARK

DATE	REVISIONS	BY

CONSULTANT'S NAME

mijares ● mora
ARCHITECTS INC.
111 N. FESTIVAL
EL PASO, TEXAS 79912
TEL: 915-542-1594
FAX: 915-542-1594

ARCHITECT'S SEAL

STATE OF TEXAS
ASHER N. DAVID
119923
MAY 31, 2016
LICENSED
PROFESSIONAL ENGINEER

SCALE

DATE	MAY 2016
DESIGN BY	P.C.
DRAWN BY	P.C.
CHKD. BY	C.S.
APPD. BY	J.M.
JOB NO.	201370

PROJECT NAME

EL PASO INTERNATIONAL AIRPORT
CHECKED BAGGAGE INSPECTION SYSTEM

6701 CONVAIR ROAD EL PASO, TEXAS

EL PASO INTERNATIONAL AIRPORT

CITY OF EL PASO

SHEET TITLE
BHS SECTIONS

B4.04
FILE NO. 238512
SHEET OF

FOR BIDDING & PERMITTING ONLY, NOT FOR CONSTRUCTION PURPOSES.

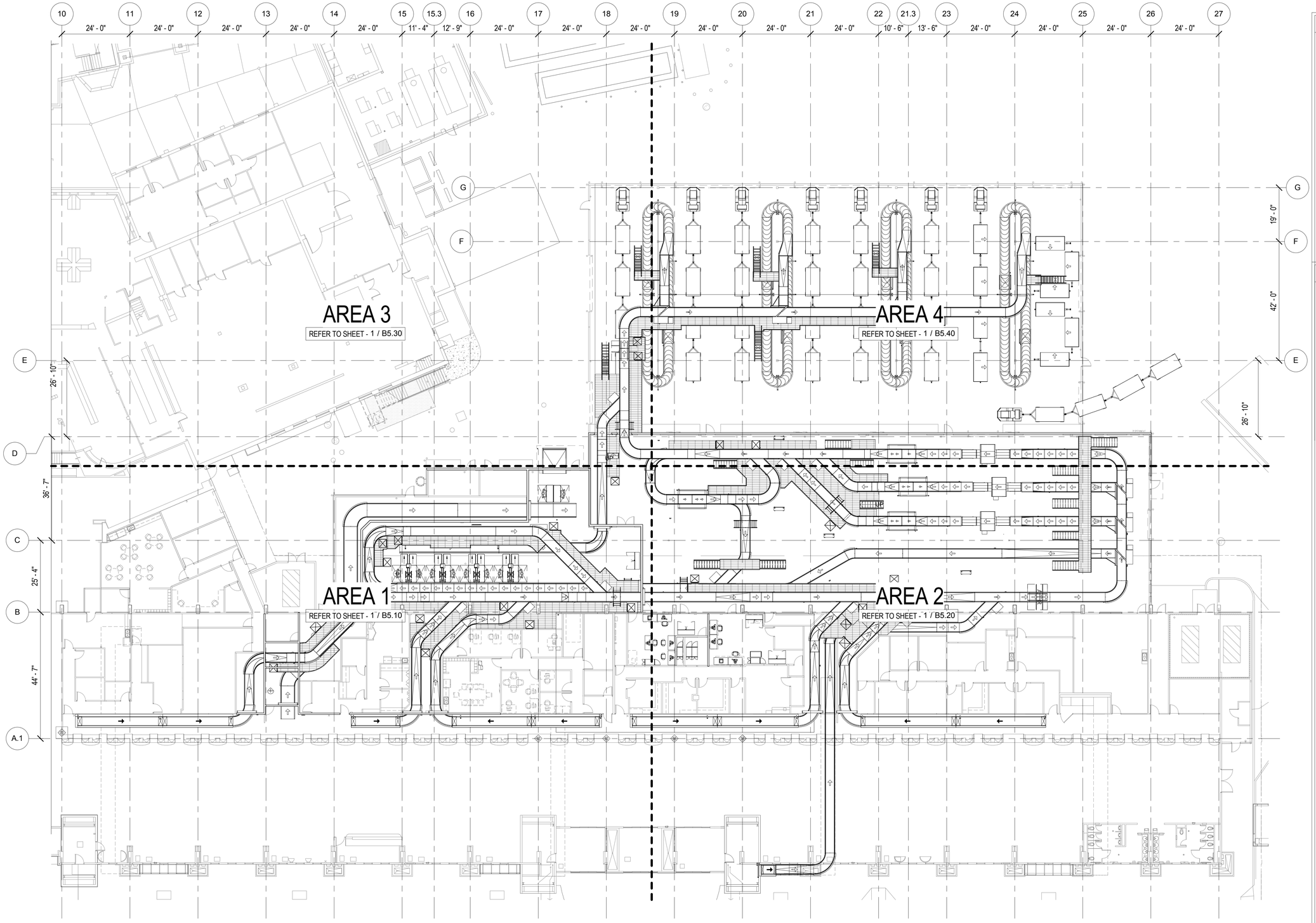

1 CATWALK BHS LAYOUT - OVERALL
1/16" = 1'-0"

PLAN NORTH

LEGEND

NOTES

REFERENCES – BENCHMARK

DATE	REVISIONS	BY

CONSULTANTS NAME

mijares ● mora
ARCHITECTS INC.
111 N. FESTIVAL
EL PASO, TEXAS 79912
TEL: 915-542-1989
FAX: 915-542-1994

ARCHITECT'S SEAL

STATE OF TEXAS
ASHER N. DAVID
119923
MAY 31, 2016
LICENSED
PROFESSIONAL ENGINEER

SCALE

DATE	MAY 2016
DESIGN BY	P.C.
DRAWN BY	P.C.
CHKD. BY	C.S.
APPD. BY	J.M.
JOB NO.	201370

PROJECT NAME

EL PASO INTERNATIONAL AIRPORT
CHECKED BAGGAGE INSPECTION SYSTEM

6701 CONVAIR ROAD EL PASO, TEXAS

EL PASO INTERNATIONAL AIRPORT

CITY OF EL PASO

FOR BIDDING & PERMITTING ONLY, NOT FOR CONSTRUCTION PURPOSES.

SHEET TITLE

BHS CATWALK – OVERALL

B5.00

FILE NO. 238512

SHEET OF

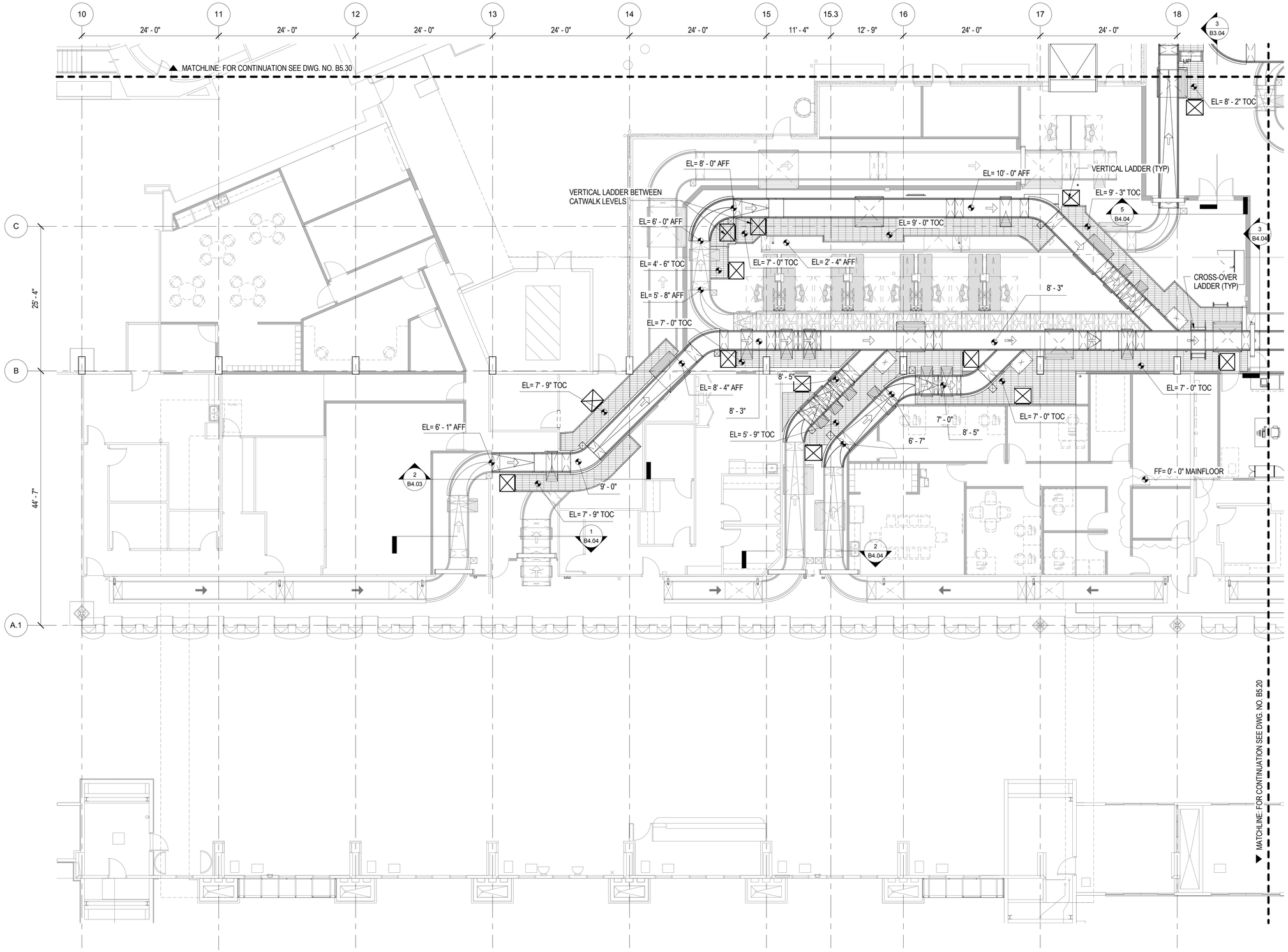

1 CATWALK BHS LAYOUT - AREA 1

1/8" = 1'-0"

PLAN NORTH

LEGEND

NOTES

CATWALK NOTES

ALL VERTICAL DIMENSIONS ARE REFERENCED ABOVE FINISHED FLOOR RELATIVE TO THE CURRENT FLOOR ELEVATION

TOC = TOP OF CATWALK ELEVATION ABOVE FINISHED FLOOR.

REFERENCES – BENCHMARK

DATE	REVISIONS	BY

CONSULTANT'S NAME

mijares ● mora

A R C H I T E C T S I N C.

111 N. TESTIVAL
EL PASO, TEXAS 79912
TEL: 915-542-1989
FAX: 915-542-1994

ARCHITECT'S SEAL

STATE OF TEXAS
ASHER N. DAVID
119923
MAY 31, 2016
LICENSED
PROFESSIONAL ENGINEER

SCALE

DATE	MAY 2016
DESIGN BY	P.C.
DRAWN BY	P.C.
CHKD. BY	C.S.
APPD. BY	J.M.
JOB NO.	201370

PROJECT NAME

EL PASO INTERNATIONAL AIRPORT
CHECKED BAGGAGE INSPECTION SYSTEM

6701 CONVAIR ROAD

EL PASO, TEXAS

EL PASO INTERNATIONAL AIRPORT

CITY OF EL PASO

SHEET TITLE

BHS CATWALK – AREA 1

B5.10

FILE NO. 238512

SHEET OF

FOR BIDDING & PERMITTING ONLY, NOT FOR CONSTRUCTION PURPOSES.

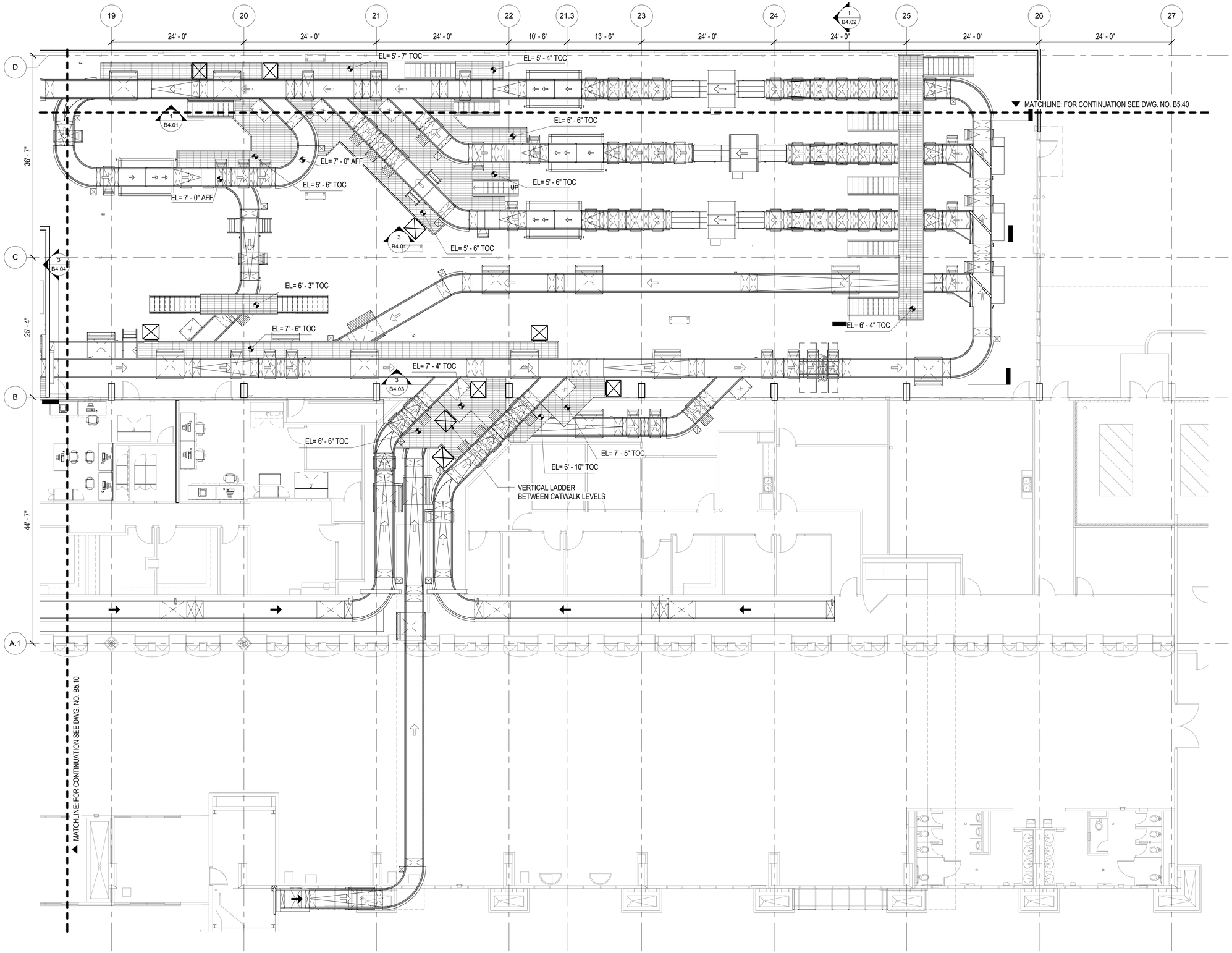

1 CATWALK BHS LAYOUT - AREA 2

1/8" = 1'-0"

PLAN NORTH

LEGEND

NOTES

CATWALK NOTES

ALL VERTICAL DIMENSIONS ARE REFERENCED ABOVE FINISHED FLOOR RELATIVE TO THE CURRENT FLOOR ELEVATION

TOC = TOP OF CATWALK ELEVATION ABOVE FINISHED FLOOR.

REFERENCES – BENCHMARK

DATE	REVISIONS	BY

CONSULTANT'S NAME

mijares ● mora

ARCHITECTS INC.

111 N. FESTIVAL
EL PASO, TEXAS 79912
TEL: 915-542-1989
FAX: 915-542-1994

ARCHITECT'S SEAL

STATE OF TEXAS
ASHER N. DAVID
119923
MAY 31, 2016
LICENSED
PROFESSIONAL ENGINEER

SCALE

DATE	MAY 2016
DESIGN BY	P.C.
DRAWN BY	P.C.
CHKD. BY	C.S.
APPD. BY	J.M.
JOB NO.	201370

PROJECT NAME

EL PASO INTERNATIONAL AIRPORT
CHECKED BAGGAGE INSPECTION SYSTEM

6701 CONVAIR ROAD

EL PASO, TEXAS

EL PASO INTERNATIONAL AIRPORT

CITY OF EL PASO

SHEET TITLE

BHS CATWALK – AREA 2

B5.20

FILE NO. 238512

SHEET OF

FOR BIDDING & PERMITTING ONLY, NOT FOR CONSTRUCTION PURPOSES.

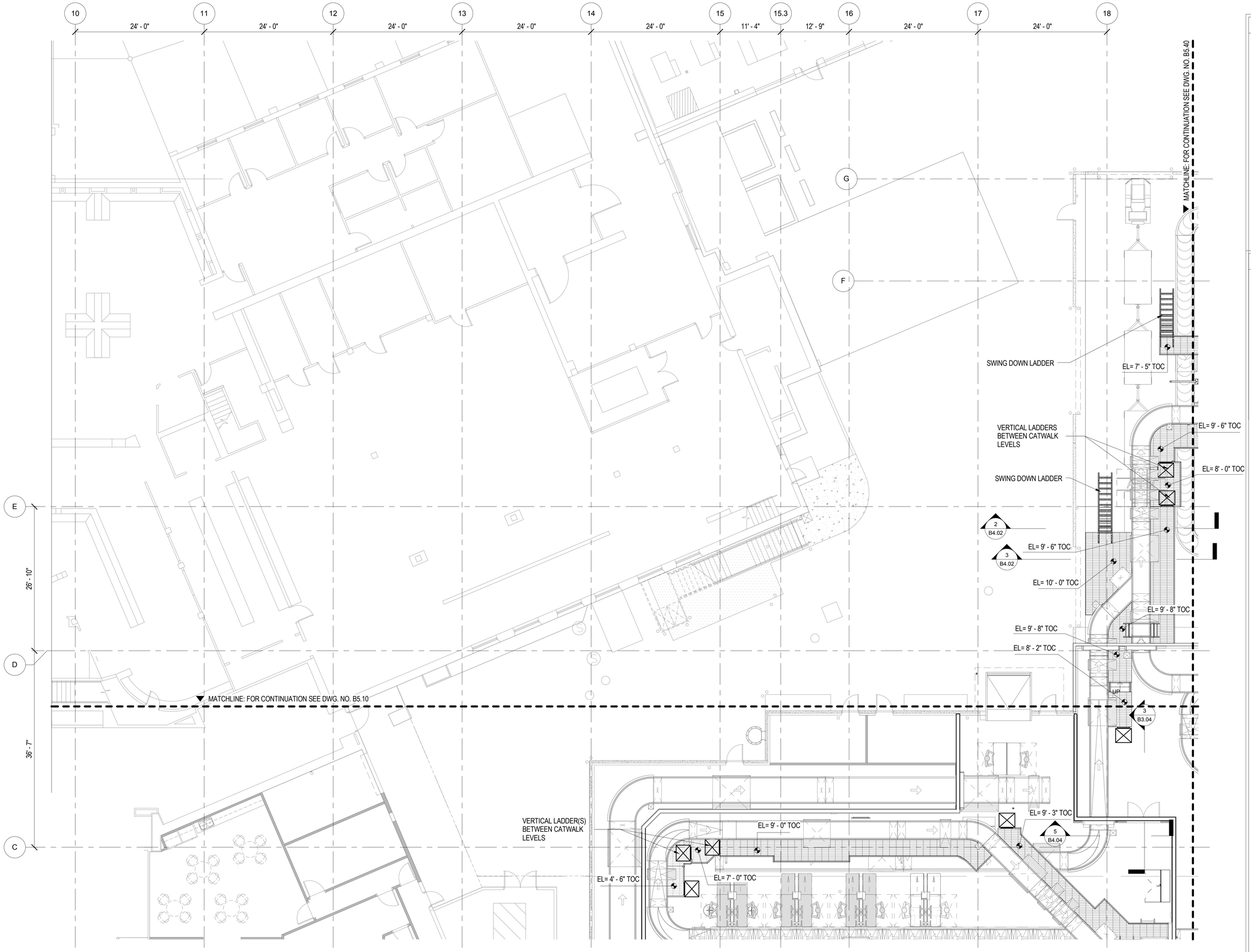

1 CATWALK BHS LAYOUT - AREA 3
1/8" = 1'-0"

PLAN NORTH

LEGEND

NOTES

CATWALK NOTES
ALL VERTICAL DIMENSIONS ARE REFERENCED ABOVE FINISHED FLOOR RELATIVE TO THE CURRENT FLOOR ELEVATION

TOC = TOP OF CATWALK ELEVATION ABOVE FINISHED FLOOR.

REFERENCES – BENCHMARK

DATE	REVISIONS	BY

CONSULTANT'S NAME

mijares ● mora
ARCHITECTS INC.
111 N. FESTIVAL
EL PASO, TEXAS 79912
TEL: 915-542-1989
FAX: 915-542-1594

ARCHITECT'S SEAL

STATE OF TEXAS
ASHER N. DAVID
119023
MAY 31, 2016
LICENSED
PROFESSIONAL ENGINEER

SCALE

DATE	MAY 2016
DESIGN BY	P.C.
DRAWN BY	P.C.
CHKD. BY	C.S.
APPD. BY	J.M.
JOB NO.	201370

PROJECT NAME

EL PASO INTERNATIONAL AIRPORT
CHECKED BAGGAGE INSPECTION SYSTEM

6701 CONVAIR ROAD EL PASO, TEXAS

EL PASO INTERNATIONAL AIRPORT

CITY OF EL PASO

SHEET TITLE

BHS CATWALK – AREA 3

B5.30

FILE NO. 238512

SHEET OF

FOR BIDDING & PERMITTING ONLY, NOT FOR CONSTRUCTION PURPOSES.

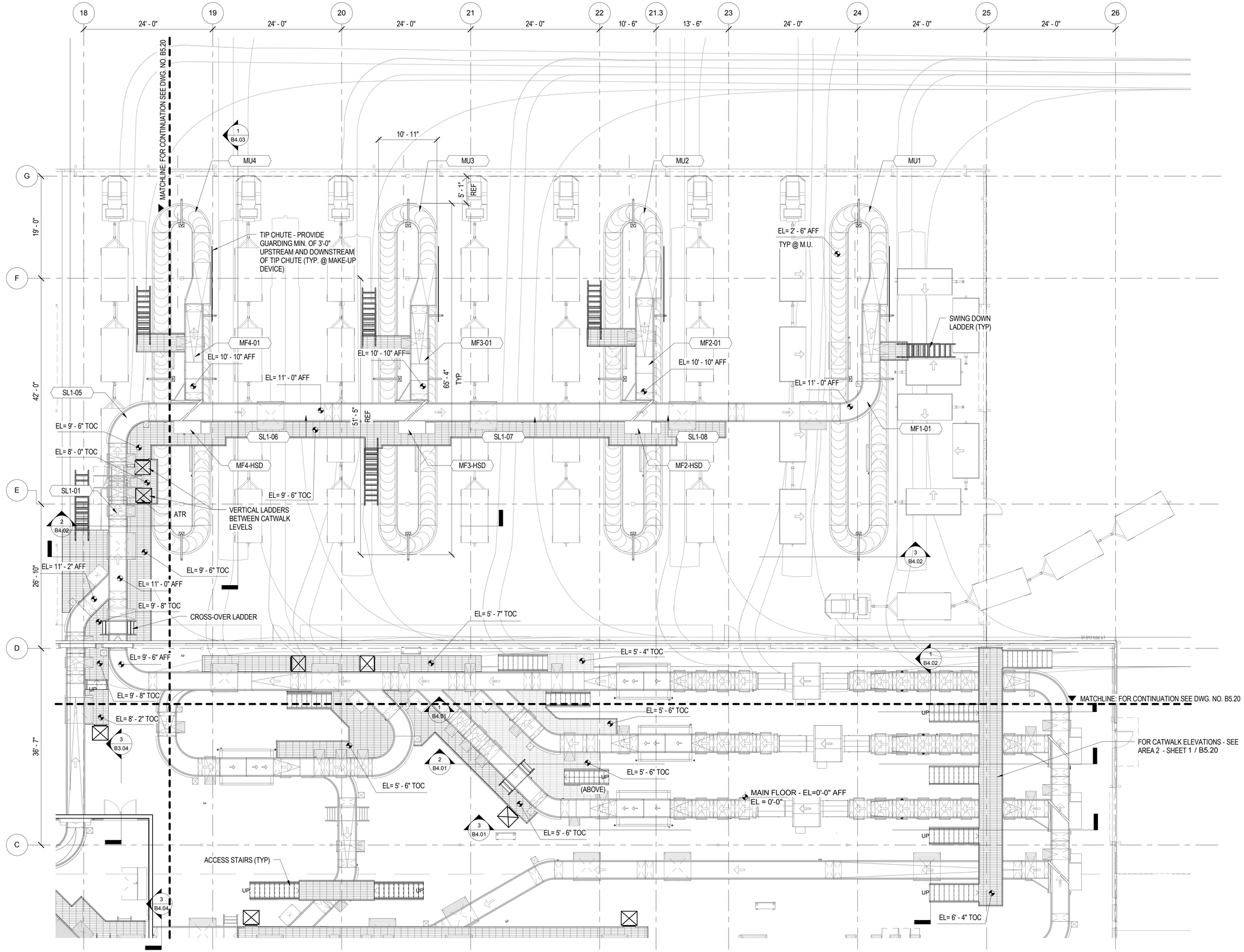

1 CATWALK BHS LAYOUT - AREA 4
1/8" = 1'-0"

PLAN NORTH

LEGEND

NOTES

CATWALK NOTES
ALL VERTICAL DIMENSIONS ARE REFERENCED ABOVE FINISHED FLOOR RELATIVE TO THE CURRENT FLOOR ELEVATION

TOC = TOP OF CATWALK ELEVATION ABOVE FINISHED FLOOR.

REFERENCES – BENCHMARK

DATE	REVISIONS	BY

CONSULTANT'S NAME

mijares ● mora
A R C H I T E C T S I N C.
111 N. FESTIVAL
EL PASO, TEXAS 79912
TEL: 915-542-1989
FAX: 915-542-1994

ARCHITECT'S SEAL

STATE OF TEXAS
ASHER N. DAVID
119923
MAY 31, 2016
LICENSED
PROFESSIONAL ENGINEER

SCALE

DATE	MAY 2016
DESIGN BY	P.C.
DRAWN BY	P.C.
CHKD. BY	C.S.
APPD. BY	J.M.
JOB NO.	201370

PROJECT NAME

EL PASO INTERNATIONAL AIRPORT
CHECKED BAGGAGE INSPECTION SYSTEM

6701 CONVAIR ROAD

EL PASO, TEXAS

EL PASO
INTERNATIONAL AIRPORT

CITY OF EL PASO

SHEET TITLE

BHS CATWALK – AREA 4

B5.40

FILE NO. 238512

SHEET OF

FOR BIDDING & PERMITTING ONLY, NOT FOR CONSTRUCTION PURPOSES.

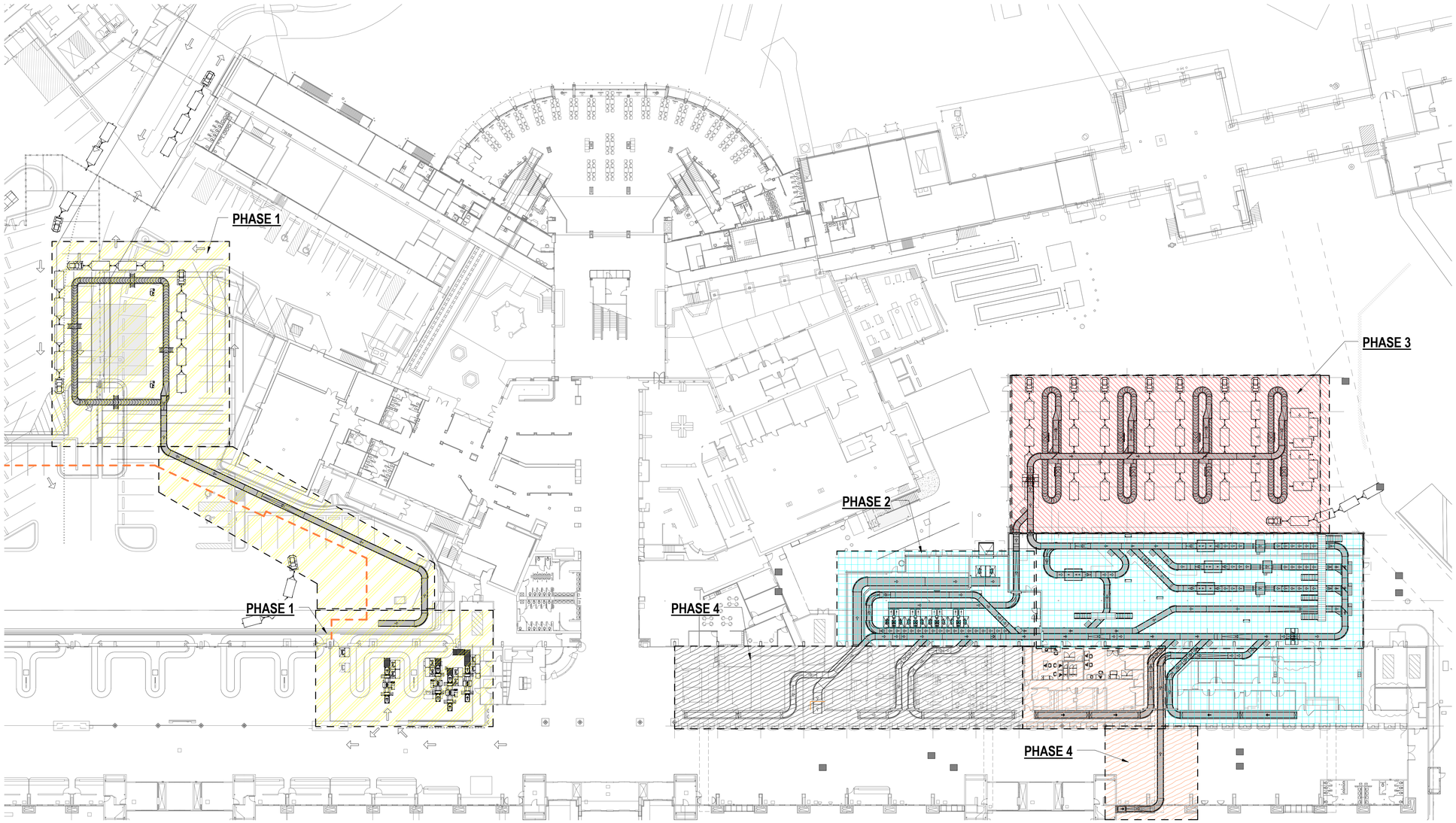

1 PHASING - OVERVIEW - SITE PLAN
1" = 30'-0"

PLAN NORTH

LEGEND

PHASING

- PHASE 1
- PHASE 2
- PHASE 3
- PHASE 4

NOTES

REFERENCES – BENCHMARK

DATE	REVISIONS	BY

CONSULTANTS NAME

mijares ● mora
A R C H I T E C T S I N C.
111 N. FESTIVAL
EL PASO, TEXAS 79912
TEL: 915-542-1989
FAX: 915-542-1594

ARCHITECT'S SEAL

STATE OF TEXAS
ASHER N. DAVID
119923
MAY 31, 2016
LICENSED
PROFESSIONAL ENGINEER

SCALE

DATE	MAY 2016
DESIGN BY	P.C.
DRAWN BY	P.C.
CHKD. BY	C.S.
APPD. BY	J.M.
JOB NO.	201370

PROJECT NAME

EL PASO INTERNATIONAL AIRPORT
CHECKED BAGGAGE INSPECTION SYSTEM

EL PASO, TEXAS

6701 CONVAIR ROAD

EL PASO INTERNATIONAL AIRPORT

CITY OF EL PASO

SHEET TITLE

PHASING – OVERVIEW – SITE PLAN

B6.00

FILE NO. 238512

SHEET OF

FOR BIDDING & PERMITTING ONLY, NOT FOR CONSTRUCTION PURPOSES.

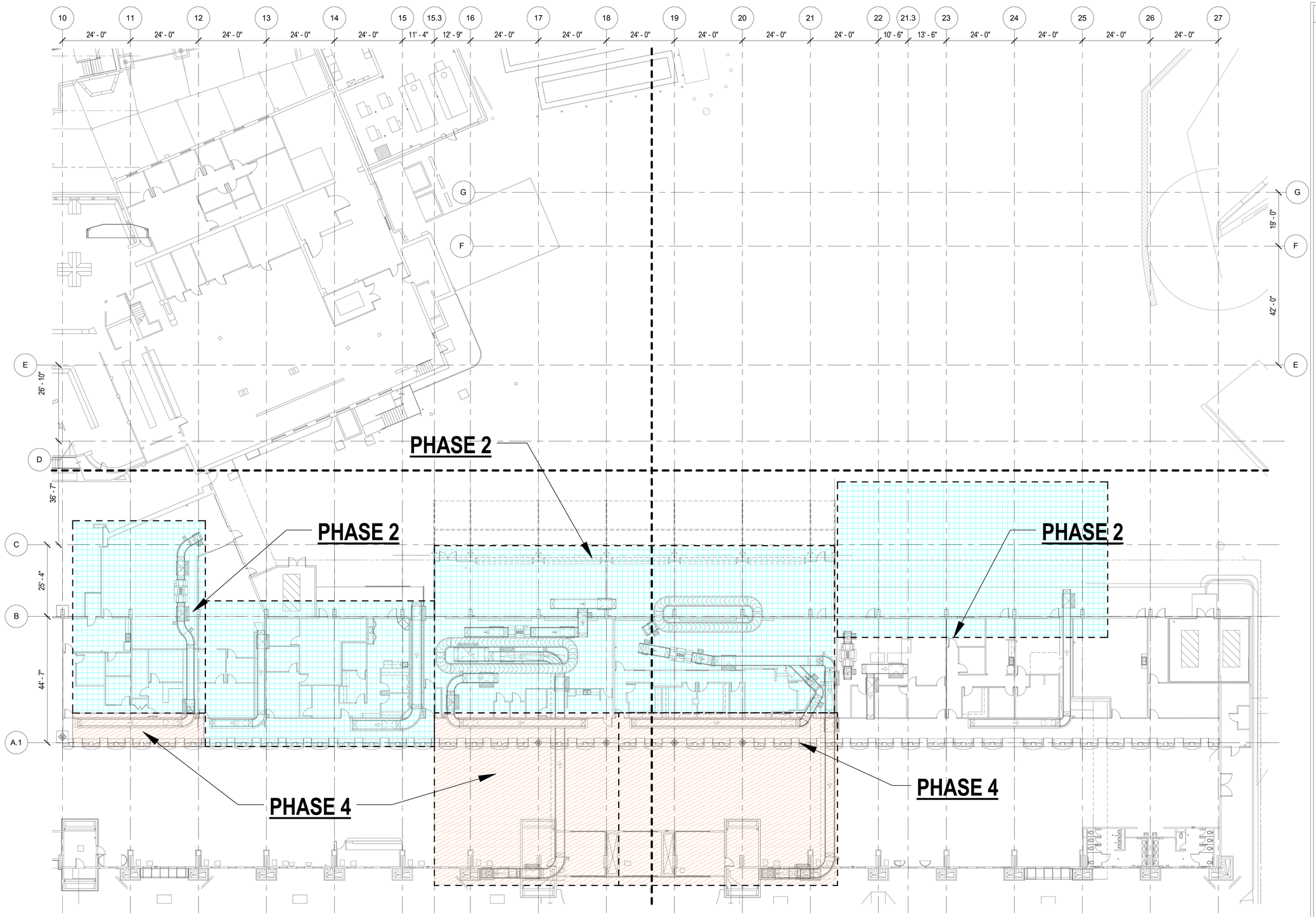

1 PHASING - EXISTING AND DEMO BHS - OVERVIEW
1/16" = 1'-0"

PLAN NORTH

LEGEND

PHASING

- PHASE 1
- PHASE 2
- PHASE 3
- PHASE 4

REFERENCES – BENCHMARK

DATE	REVISIONS	BY

CONSULTANTS NAME

mijares ● mora
ARCHITECTS INC.
111 N. FESTIVAL
EL PASO, TEXAS 79912
TELEPHONE: 915-542-1989
FAX: 915-542-1594

ARCHITECT'S SEAL

STATE OF TEXAS
ASHER N. DAVID
119923
MAY 31, 2016
LICENSED
PROFESSIONAL ENGINEER

SCALE

DATE	MAY 2016
DESIGN BY	P.C.
DRAWN BY	P.C.
CHKD. BY	C.S.
APPD. BY	J.M.
JOB NO.	201370

PROJECT NAME

EL PASO INTERNATIONAL AIRPORT
CHECKED BAGGAGE INSPECTION SYSTEM

6701 CONVAIR ROAD EL PASO, TEXAS

EL PASO INTERNATIONAL AIRPORT

CITY OF EL PASO

SHEET TITLE

PHASING OVERVIEW – DEMO

B6.01

FILE NO. 238512

SHEET OF

FOR BIDDING & PERMITTING ONLY, NOT FOR CONSTRUCTION PURPOSES.

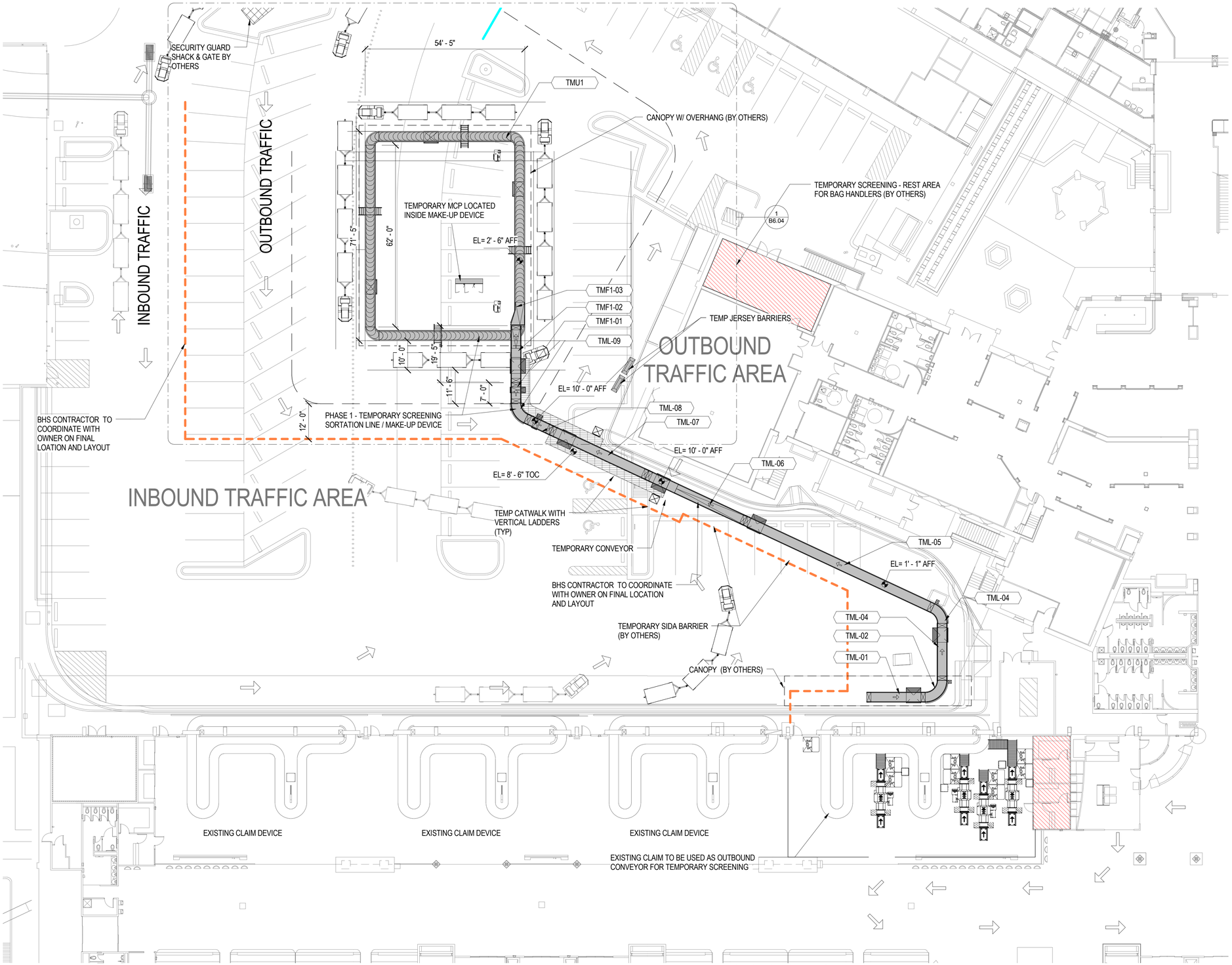

1 PHASE 1 - TEMPORARY - TEMP SORTATION & SCREENING
1/16" = 1'-0"

PLAN NORTH

PHASING NOTES: PHASE 1 SCOPE

MAXIMUM DURATION:	9 MONTHS
PHASE PREDECESSOR:	NONE
CONCURRENT WORK:	NONE

CONVEYOR SUBSYSTEMS INSTALLED:

TEMPORARY LINES: TML1, TMF, TMU

LEGEND

CONVEYOR LEGEND

- NEW CONVEYORS INSTALLED
- EXISTING CONVEYORS
- CONVEYORS DEMOLISHED OR REMOVED

NOTES

BHS PHASING NOTES:

1) BHS CONTRACTOR SHALL ABIDE BY ALL RULES AND GUIDELINES SET ON ARCHITECTURAL PLANS - PHASING NOTES. REFER TO ARCH'L PHASING PLANS AND NOTES.

2) COORDINATE WITH OTHER DISCIPLINES TO MAINTAIN BHS CONVEYOR RIGHT-OF-WAY.

3) ALL EXTERIOR CONVEYORS TO BE PROTECTED FROM THE ELEMENTS. IF CONVEYOR NOT COVERED BY CANOPY, CONVEYOR MUST HAVE STAINLESS STEEL "TOP-HAT". REFER TO DETAILS SHEET B8.15.

4) ALL EXTERIOR MOTORS & CONTROLS TO BE EXTERIOR NEMA RATED 4. SEE BHS SPECIFICATIONS.

5) REFER TO BHS SPECIFICATIONS FOR ALL OTHER MOTORS, BELTS, CONTROLS, ETC. CONSIDERATIONS FOR EXTERIOR USE.

BHS PHASING NOTES:
Phase 1 Operations

OPERATIONS:
- CHECK-IN: Existing
- SCREENING: Temporary
- MAKE-UP: Temporary

CONSTRUCTION:
- Construction of temporary screening, sortation and make-up device

TESTING:
- INTERNAL: BHSC and Owners acceptance testing occurs at end of phase
- TSA: No TSA testing occurs
- GENERAL: No system wide testing

REFERENCES – BENCHMARK

DATE	REVISIONS	BY

CONSULTANT'S NAME

mijares ● mora
ARCHITECTS INC.
111 N. FESTIVAL
EL PASO, TEXAS 79912
TEL: 915-542-1989
FAX: 915-542-1594

ARCHITECT'S SEAL

STATE OF TEXAS
ASHER N. DAVID
119023
MAY 31, 2016
LICENSED
PROFESSIONAL ENGINEER

SCALE

DATE:	MAY 2016
DESIGN BY	P.C.
DRAWN BY	P.C.
CHKD. BY	C.S.
APPD. BY	J.M.
JOB NO.	201370

PROJECT NAME

EL PASO INTERNATIONAL AIRPORT
CHECKED BAGGAGE INSPECTION SYSTEM

6701 CONVAIR ROAD EL PASO, TEXAS

EL PASO INTERNATIONAL AIRPORT

CITY OF EL PASO

SHEET TITLE

BHS PHASING – PHASE 1 – TEMP 1

B6.02

FILE NO. 238512

SHEET OF

FOR BIDDING & PERMITTING ONLY, NOT FOR CONSTRUCTION PURPOSES.

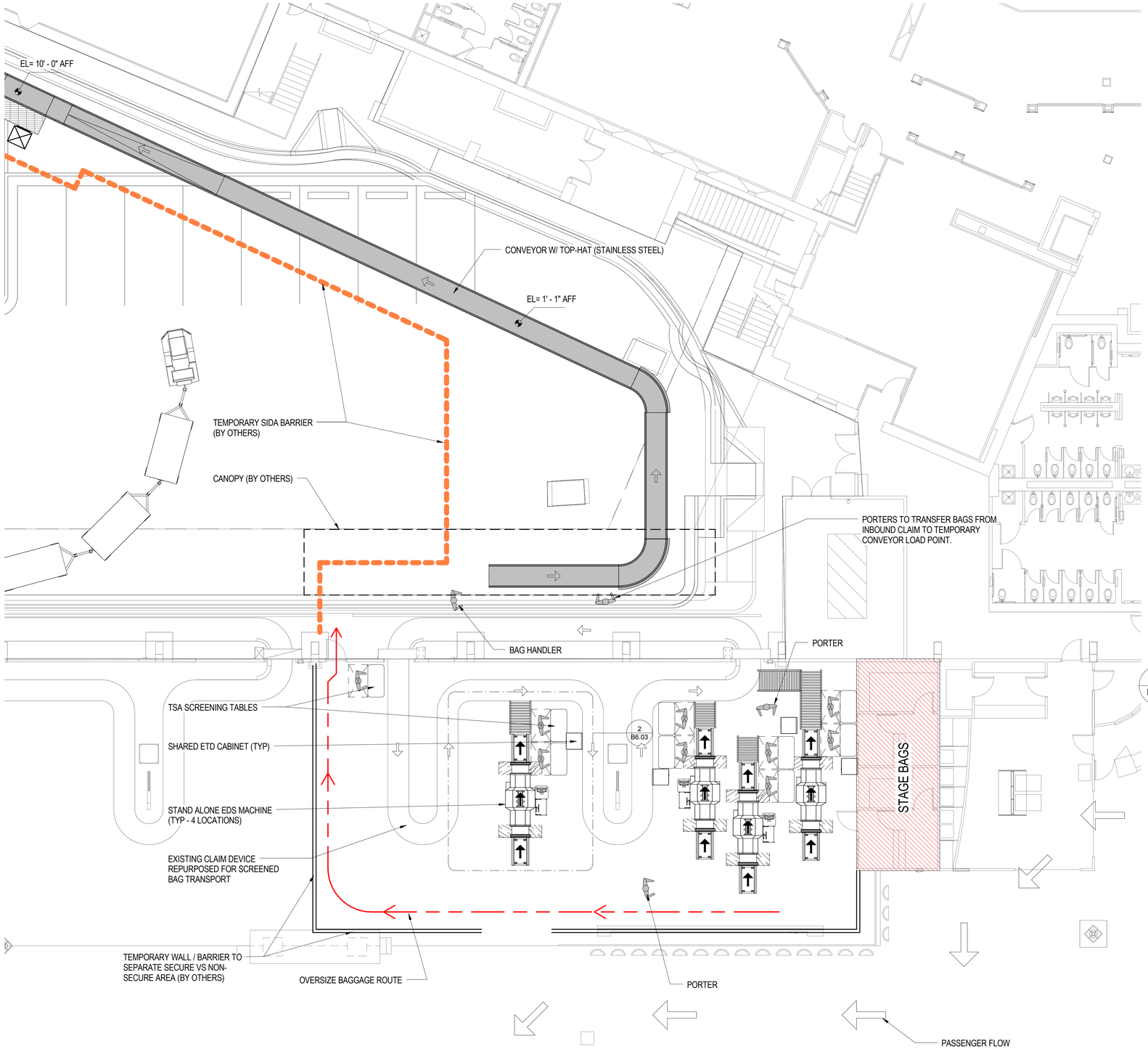

1 PHASING - TEMPORARY - SCREENING AREA - AREA P1B
1/8" = 1'-0"

PLAN NORTH

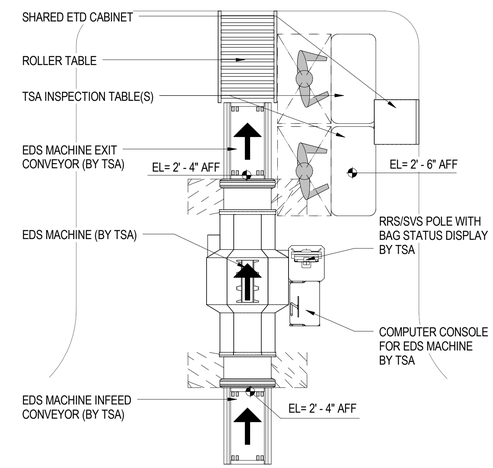

2 PHASING - TEMPORARY - TYPICAL STAND ALONE LAYOUT
B6.03 1/4" = 1'-0"

LEGEND

CONVEYOR LEGEND

- NEW CONVEYORS INSTALLED
- EXISTING CONVEYORS
- CONVEYORS DEMOLISHED OR REMOVED

NOTES

BHS PHASING NOTES:

1) BHS CONTRACTOR SHALL ABIDE BY ALL RULES AND GUIDELINES SET ON ARCHITECTURAL PLANS - PHASING NOTES. REFER TO ARCH'L PHASING PLANS AND NOTES.

2) COORDINATE WITH OTHER DISCIPLINES TO MAINTAIN BHS CONVEYOR RIGHT-OF-WAY.

3) ALL EXTERIOR CONVEYORS TO BE PROTECTED FROM THE ELEMENTS. IF CONVEYOR NOT COVERED BY CANOPY, CONVEYOR MUST HAVE STAINLESS STEEL "TOP-HAT". REFER TO DETAILS SHEET B8.15.

4) ALL EXTERIOR MOTORS & CONTROLS TO BE EXTERIOR NEMA RATED 4. SEE BHS SPECIFICATIONS.

5) REFER TO BHS SPECIFICATIONS FOR ALL OTHER MOTORS, BELTS, CONTROLS, ETC. CONSIDERATIONS FOR EXTERIOR USE.

REFERENCES – BENCHMARK

DATE	REVISIONS	BY

CONSULTANT'S NAME

mijares ● mora
A R C H I T E C T S I N C.
111 N. FESTIVAL
EL PASO, TEXAS 79912
TELEPHONE: 915-542-1989
FAX: 915-542-1994

ARCHITECT'S SEAL

STATE OF TEXAS
ASHER N. DAVID
119023
MAY 31, 2016
LICENSED
PROFESSIONAL ENGINEER

SCALE

DATE	MAY 2016
DESIGN BY	P.C.
DRAWN BY	P.C.
CHKD. BY	C.S.
APPD. BY	J.M.
JOB NO.	201370

PROJECT NAME

EL PASO INTERNATIONAL AIRPORT
CHECKED BAGGAGE INSPECTION SYSTEM

6701 CONVAIR ROAD

EL PASO, TEXAS

EL PASO INTERNATIONAL AIRPORT

CITY OF EL PASO

SHEET TITLE

BHS PHASING – PHASE 1 – TEMP 2

B6.03

FILE NO. 238512

SHEET OF

FOR BIDDING & PERMITTING ONLY, NOT FOR CONSTRUCTION PURPOSES.

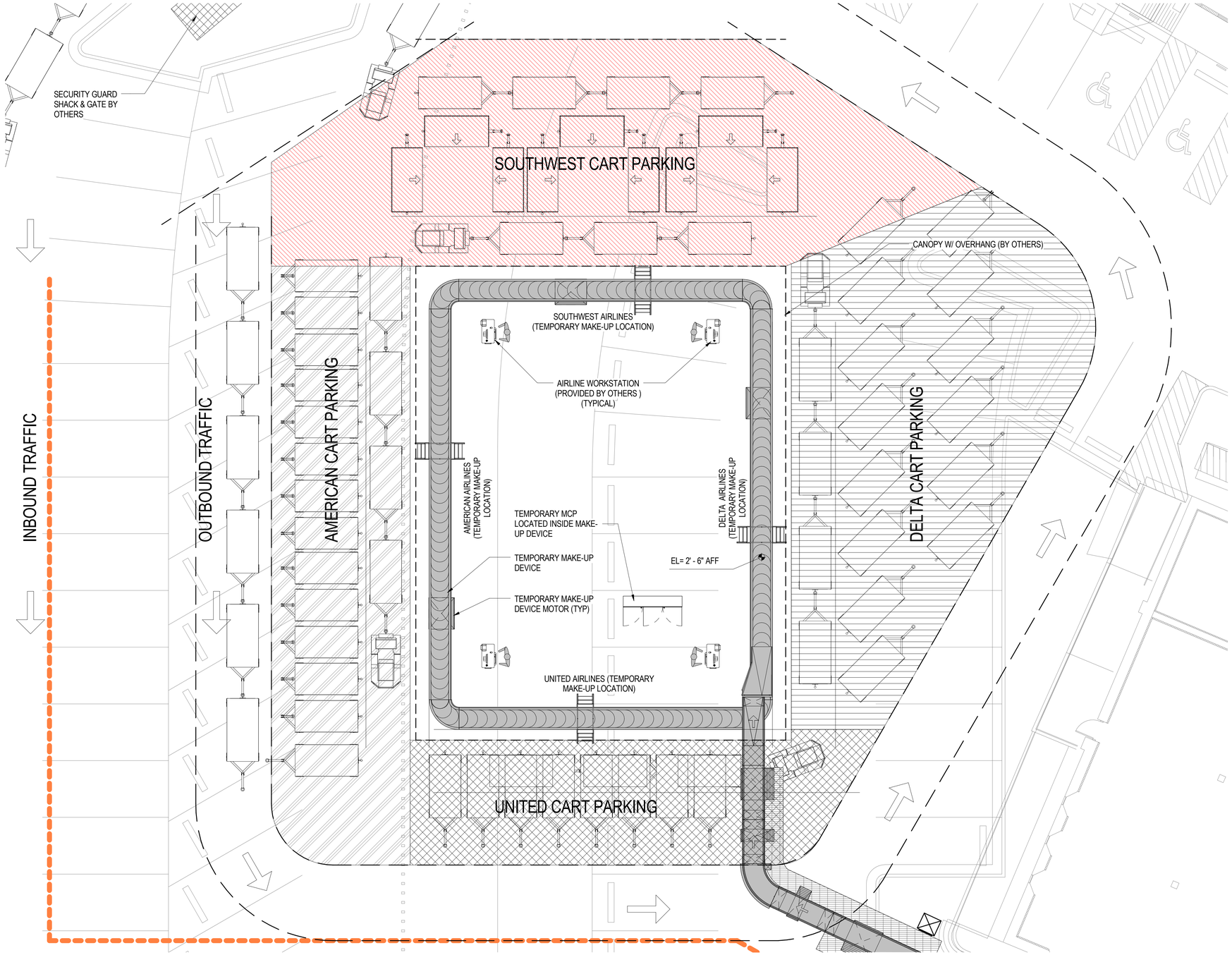

1 PHASE 1 - TEMPORARY - TEMP SORTATION & SCREENING - STORAGE
1/8" = 1'-0"

LEGEND

CONVEYOR LEGEND

- NEW CONVEYORS INSTALLED
- EXISTING CONVEYORS
- CONVEYORS DEMOLISHED OR REMOVED

NOTES

BHS PHASING NOTES:

1) BHS CONTRACTOR SHALL ABIDE BY ALL RULES AND GUIDELINES SET ON ARCHITECTURAL PLANS - PHASING NOTES. REFER TO ARCH'L PHASING PLANS AND NOTES.

2) COORDINATE WITH OTHER DISCIPLINES TO MAINTAIN BHS CONVEYOR RIGHT-OF-WAY.

3) ALL EXTERIOR CONVEYORS TO BE PROTECTED FROM THE ELEMENTS. IF CONVEYOR NOT COVERED BY CANOPY, CONVEYOR MUST HAVE STAINLESS STEEL "TOP-HAT". REFER TO DETAILS SHEET B8.15.

4) ALL EXTERIOR MOTORS & CONTROLS TO BE EXTERIOR NEMA RATED 4. SEE BHS SPECIFICATIONS.

5) REFER TO BHS SPECIFICATIONS FOR ALL OTHER MOTORS, BELTS, CONTROLS, ETC. CONSIDERATIONS FOR EXTERIOR USE.

REFERENCES – BENCHMARK

DATE	REVISIONS	BY

CONSULTANT'S NAME

mijares ● mora
ARCHITECTS INC.
111 N. FESTIVAL
EL PASO, TEXAS 79912
TEL: 915-542-1989
FAX: 915-542-1594

ARCHITECT'S SEAL

STATE OF TEXAS
ASHER N. DAVID
119023
MAY 31, 2016
LICENSED
PROFESSIONAL ENGINEER

SCALE

DATE	MAY 2016
DESIGN BY	P.C.
DRAWN BY	P.C.
CHKD. BY	C.S.
APPD. BY	J.M.
JOB NO.	201370

PROJECT NAME

EL PASO INTERNATIONAL AIRPORT
CHECKED BAGGAGE INSPECTION SYSTEM

6701 CONVAIR ROAD
EL PASO, TEXAS

EL PASO INTERNATIONAL AIRPORT

CITY OF EL PASO

SHEET TITLE

BHS PHASING – PHASE 1 – TEMP 3

B6.04

FILE NO. 238512

SHEET OF

FOR BIDDING & PERMITTING ONLY, NOT FOR CONSTRUCTION PURPOSES.

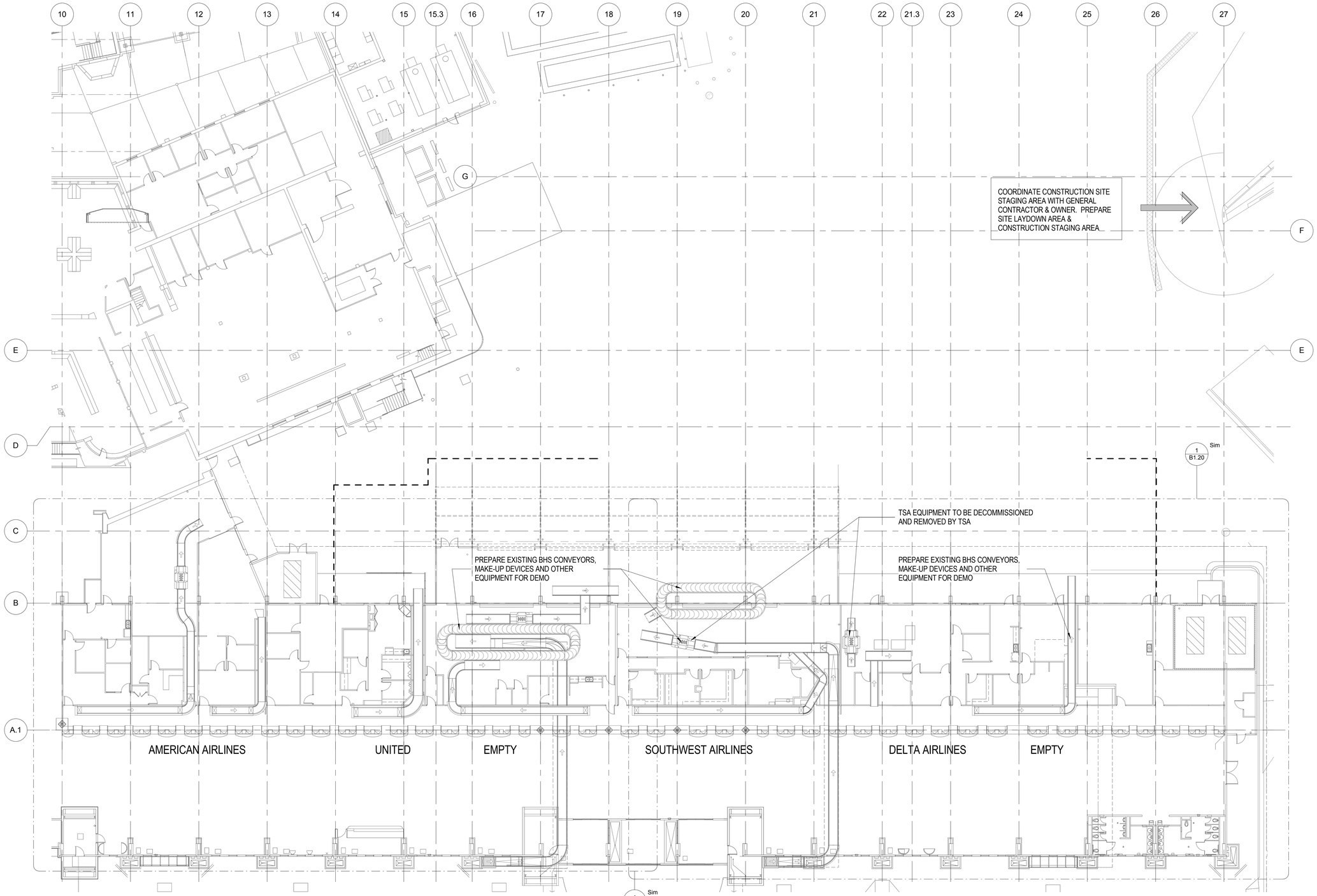

1 PHASING - PHASE 1 - Existing AND DEMO BHS
1/16" = 1'-0"

PLAN NORTH

LEGEND

NOTES

BHS PHASING NOTES:

1) BHS CONTRACTOR SHALL ABIDE BY ALL RULES AND GUIDELINES SET ON ARCHITECTURAL PLANS - PHASING NOTES. REFER TO ARCH'L PHASING PLANS AND NOTES.

2) COORDINATE WITH OTHER DISCIPLINES TO MAINTAIN BHS CONVEYOR RIGHT-OF-WAY.

REFERENCES – BENCHMARK

DATE	REVISIONS	BY

CONSULTANT'S NAME

mijares ● mora
ARCHITECTS INC.
111 N. FESTIVAL
EL PASO, TEXAS 79912
TEL: 915-542-9789
FAX: 915-542-1594

ARCHITECT'S SEAL

STATE OF TEXAS
ASHER N. DAVID
119923
MAY 31, 2016
LICENSED
PROFESSIONAL ENGINEER

SCALE

DATE	MAY 2016
DESIGN BY	P.C.
DRAWN BY	P.C.
CHKD. BY	C.S.
APPD. BY	J.M.
JOB NO.	201370

PROJECT NAME

EL PASO INTERNATIONAL AIRPORT
CHECKED BAGGAGE INSPECTION SYSTEM

6701 CONVAIR ROAD EL PASO, TEXAS

EL PASO INTERNATIONAL AIRPORT

CITY OF EL PASO

SHEET TITLE

BHS PHASING – PHASE 1 – DEMO

B6.10

FILE NO. 238512

SHEET OF

FOR BIDDING & PERMITTING ONLY, NOT FOR CONSTRUCTION PURPOSES.

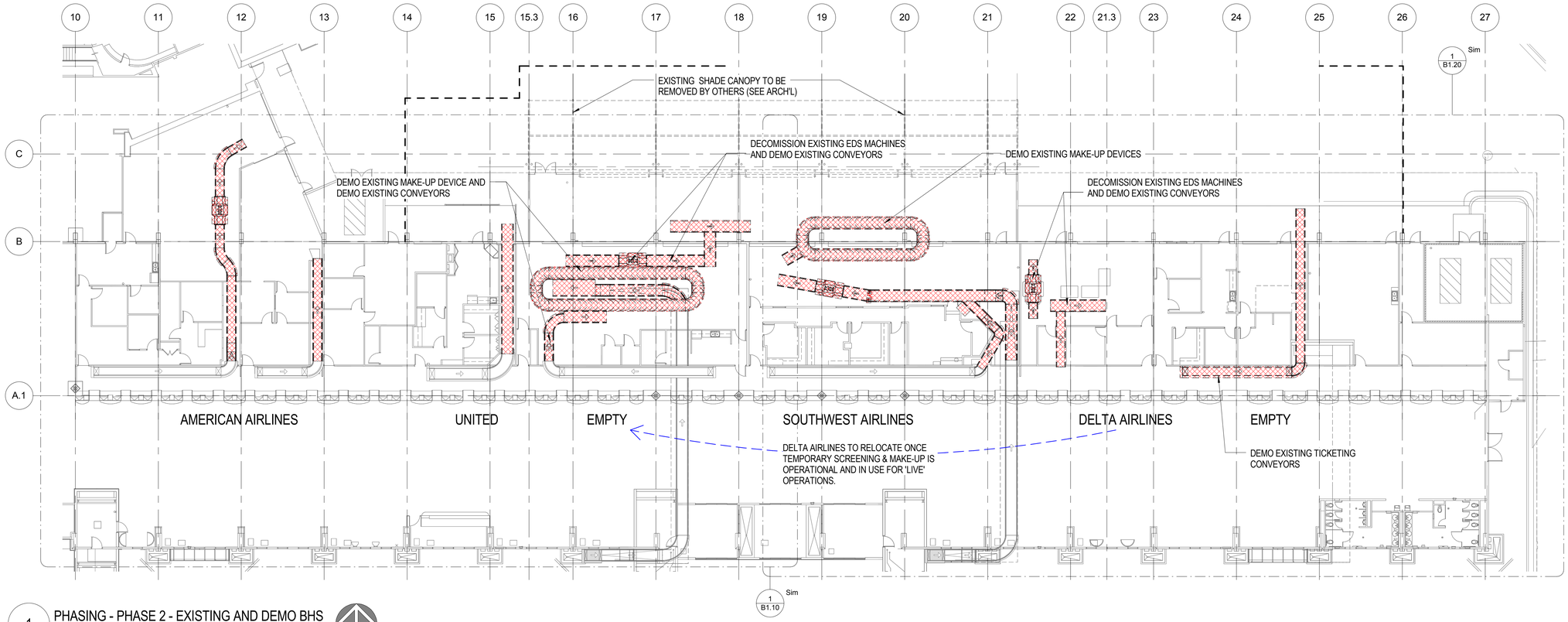

1 PHASING - PHASE 2 - EXISTING AND DEMO BHS
1/16" = 1'-0"

PLAN NORTH

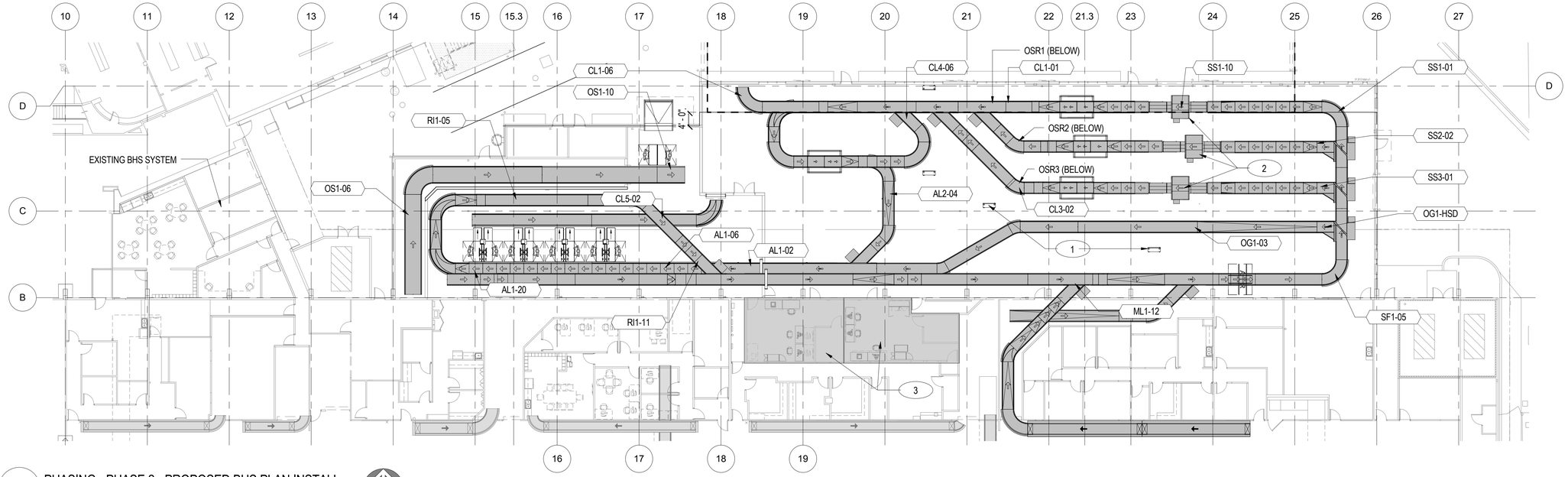

2 PHASING - PHASE 2 - PROPOSED BHS PLAN INSTALL
1/16" = 1'-0"

PLAN NORTH

PHASING NOTES: PHASE 2 SCOPE

MAXIMUM DURATION:	7.5 MONTHS
PHASE PREDECESSOR:	PHASE 1
CONCURRENT WORK:	NONE

CONVEYOR SUBSYSTEMS INSTALLED:

TICKETING LINES:	ML1 & TC5
SECURITY LINES:	SF1, SS1, SS2, & SS3
ALARM LINES:	AL1, AL2, RI1
CLEAR LINES:	CL1, CL2, CL3, CL4, CL5-01 TO CL5-03
OSR LINES:	OSR1, OSR2, & OSR3
RE-INSERT:	RI1

LEGEND

CONVEYOR LEGEND

- NEW CONVEYORS INSTALLED
- EXISTING CONVEYORS
- CONVEYORS DEMOLISHED OR REMOVED

NOTES

BHS PHASING NOTES:

1) BHS CONTRACTOR SHALL ABIDE BY ALL RULES AND GUIDELINES SET ON ARCHITECTURAL PLANS - PHASING NOTES. REFER TO ARCH'L PHASING PLANS AND NOTES.

2) COORDINATE WITH OTHER DISCIPLINES TO MAINTAIN BHS CONVEYOR RIGHT-OF-WAY.

BHS PHASING KEY NOTES:

1. INSTALL ALL MOTOR CONTROL PANELS & PDPS FOR ASSOCIATED SUBSYSTEMS
2. COORDINATE PLACEMENT OF NEW EDS MACHINES WITH TSA AND EDS MACHINE MANUFACTURER.
3. INSTALLATION OF TSA OSR ROOM & BHS CONTROL ROOM

BHS PHASING NOTES: Phase 2 Operations

OPERATIONS:
- CHECK-IN: Existing
- SCREENING: Temporary
- MAKE-UP: Temporary

CONSTRUCTION:
- All new CBIS and CBRA conveyors installed
- Exist. EDSD decommisioned
- Exist. conveyors demo'd up to fire/security door
- New EDS machine delivery occurs
- OSR room and BHS Control Room construction occurs

TESTING:
- INTERNAL: BHSC and Owners acceptance testing occurs at end of phase
- TSA: No TSA testing occurs
- GENERAL: No system wide testing

REFERENCES – BENCHMARK

DATE	REVISIONS	BY

CONSULTANT'S NAME

mijares ● mora
ARCHITECTS INC.
111 N. FESTIVAL
EL PASO, TEXAS 79912
TEL: 915-542-1989
FAX: 915-542-1994

ARCHITECT'S SEAL

STATE OF TEXAS
ASHER N. DAVID
119923
MAY 31, 2016
LICENSED
PROFESSIONAL ENGINEER

SCALE

DATE:	MAY 2016
DESIGN BY	P.C.
DRAWN BY	P.C.
CHKD. BY	C.S.
APPD. BY	J.M.
JOB NO.	201370

PROJECT NAME

EL PASO INTERNATIONAL AIRPORT
CHECKED BAGGAGE INSPECTION SYSTEM

6701 CONVAIR ROAD EL PASO, TEXAS

EL PASO INTERNATIONAL AIRPORT

CITY OF EL PASO

SHEET TITLE

BHS PHASING – PHASE 2

B6.20

FILE NO. 238512

SHEET OF

FOR BIDDING & PERMITTING ONLY, NOT FOR CONSTRUCTION PURPOSES.

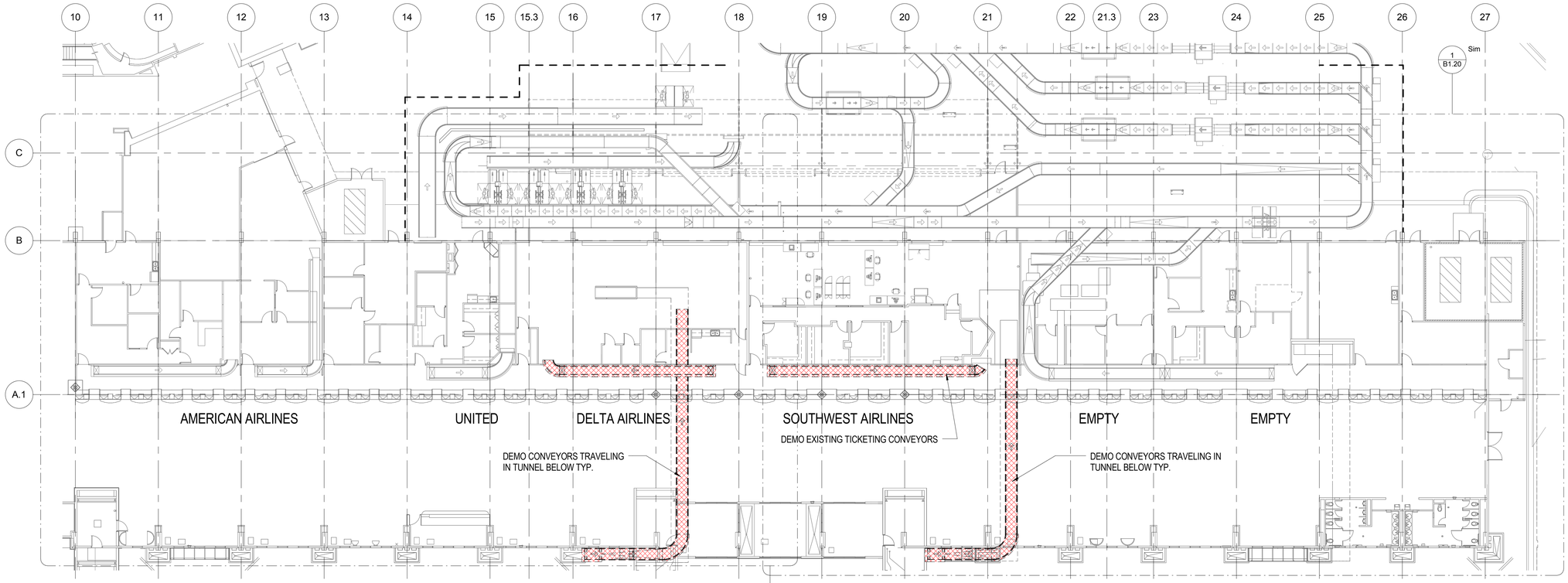

1 PHASING - PHASE 3 - EXISTING AND DEMO BHS
1/16" = 1'-0"

PLAN NORTH

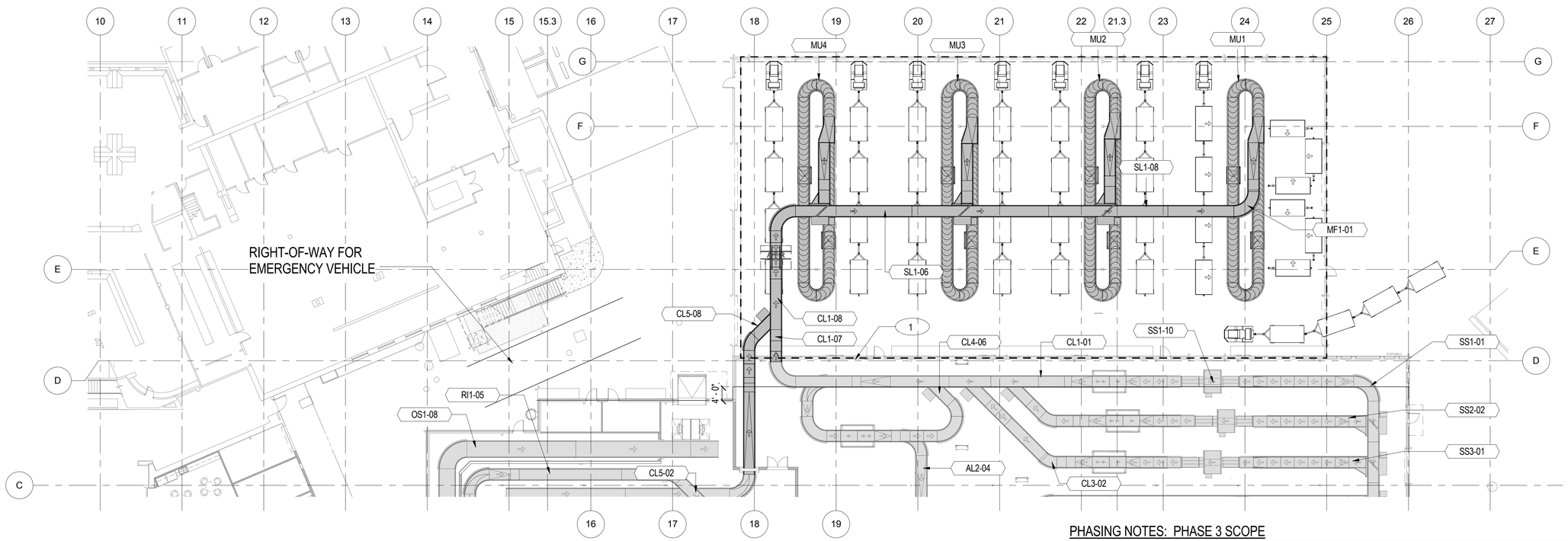

2 PHASING - PHASE 3 - PROPOSED BHS PLAN INSTALL
1/16" = 1'-0"

PLAN NORTH

PHASING NOTES: PHASE 3 SCOPE

MAXIMUM DURATION:	8.5 MONTHS	**CONVEYOR SUBSYSTEMS INSTALLED:**	
PHASE PREDECESSOR:	PHASE 2	CLEAR LINES:	CL5-04 TO CL5-08, CL1-07 TO CL1-08
CONCURRENT WORK:	NONE	SORT LINES:	SL1, MF1 - MF4
		MAKE-UP DEVICES:	MU1 - MU4

LEGEND

CONVEYOR LEGEND

- NEW CONVEYORS INSTALLED
- EXISTING CONVEYORS
- CONVEYORS DEMOLISHED OR REMOVED

NOTES

BHS PHASING NOTES:

1) BHS CONTRACTOR SHALL ABIDE BY ALL RULES AND GUIDELINES SET ON ARCHITECTURAL PLANS - PHASING NOTES. REFER TO ARCH'L PHASING PLANS AND NOTES.

2) COORDINATE WITH OTHER DISCIPLINES TO MAINTAIN BHS CONVEYOR RIGHT-OF-WAY.

BHS PHASING KEY NOTES:

1 INSTALL ALL MOTOR CONTROL PANELS ON PEDESTALS

BHS PHASING NOTES:
Phase 3 Operations

OPERATIONS:
- CHECK-IN: Existing
- SCREENING: Temporary
- MAKE-UP: Temporary

CONSTRUCTION:
- All new sortation conveyors installed
- New make-up devices installed
- OSR & BHS Control Rooms construction

TESTING:
- INTERNAL: BHSC and Owners acceptance testing occurs at end of phase
- TSA: Pre-ISAT, TRR, and ISAT testing occurs
- GENERAL: System wide testing occurs

REFERENCES – BENCHMARK

DATE	REVISIONS	BY

CONSULTANT'S NAME

mijares ● mora
ARCHITECTS INC.
111 N. FESTIVAL
EL PASO, TEXAS 79912
TEL: 915-542-1989
FAX: 915-542-1594

ARCHITECT'S SEAL

STATE OF TEXAS
ASHER N. DAVID
119023
MAY 31, 2016
LICENSED
PROFESSIONAL ENGINEER

SCALE

DATE:	MAY 2016
DESIGN BY	P.C.
DRAWN BY	P.C.
CHKD. BY	C.S.
APPD. BY	J.M.
JOB NO.	201370

PROJECT NAME

EL PASO INTERNATIONAL AIRPORT
CHECKED BAGGAGE INSPECTION SYSTEM
6701 CONVAIR ROAD
EL PASO, TEXAS

EL PASO INTERNATIONAL AIRPORT

CITY OF EL PASO

SHEET TITLE

BHS PHASING – PHASE 3

B6.30

FILE NO. 238512

SHEET OF

FOR BIDDING & PERMITTING ONLY, NOT FOR CONSTRUCTION PURPOSES.

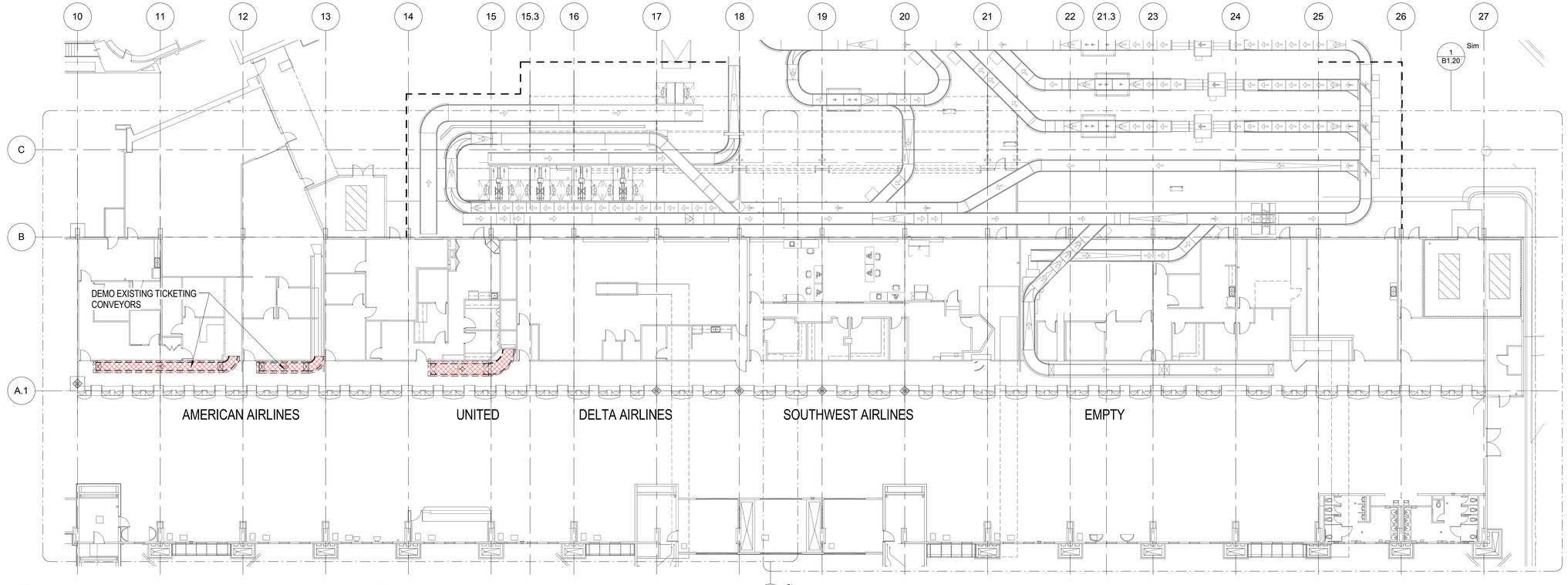

1 PHASING - PHASE 4 - EXISTING AND DEMO BHS
1/16" = 1'-0"

PLAN NORTH

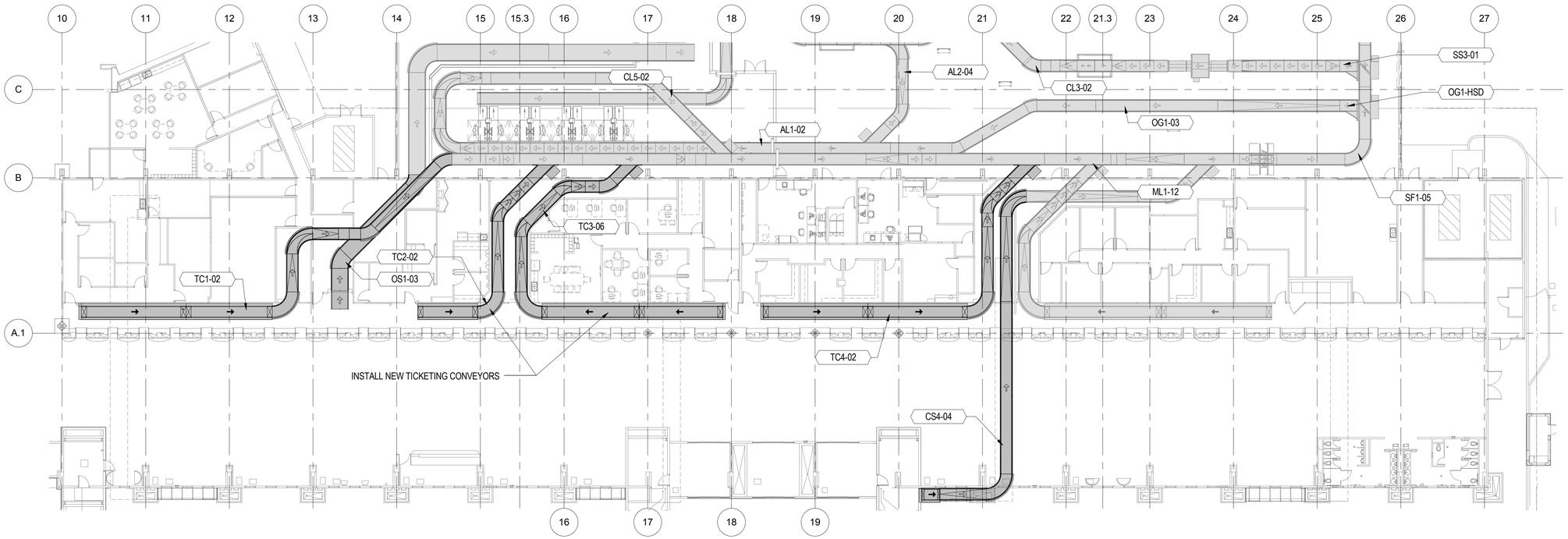

2 PHASING - PHASE 4 - PROPOSED BHS PLAN INSTALL
1/16" = 1'-0"

PLAN NORTH

PHASING NOTES: PHASE 4 SCOPE

MAXIMUM DURATION:	6 MONTHS
PHASE PREDECESSOR:	PHASE 3
CONCURRENT WORK:	NONE

CONVEYOR SUBSYSTEMS INSTALLED:

TICKETING LINES:	TC1, TC2, TC3 & TC4, OS1
CURBSIDE LINES:	CS4

LEGEND

CONVEYOR LEGEND

- NEW CONVEYORS INSTALLED
- EXISTING CONVEYORS
- CONVEYORS DEMOLISHED OR REMOVED

NOTES

BHS PHASING NOTES:

1) BHS CONTRACTOR SHALL ABIDE BY ALL RULES AND GUIDELINES SET ON ARCHITECTURAL PLANS - PHASING NOTES. REFER TO ARCH'L PHASING PLANS AND NOTES.

2) COORDINATE WITH OTHER DISCIPLINES TO MAINTAIN BHS CONVEYOR RIGHT-OF-WAY.

BHS PHASING NOTES:
Phase 4 Operations

OPERATIONS:
- CHECK-IN: Existing
- SCREENING: Temporary
- MAKE-UP: Temporary

CONSTRUCTION:
- Sortation
- OSR Room Construction and BHS Control Room construction

TESTING:
- INTERNAL: BHSC and Owners acceptance testing occurs at end of phase
- TSA: Pre-ISAT, TRR, snd ISAT occur
- GENERAL: System wide testing

REFERENCES – BENCHMARK

DATE	REVISIONS	BY

CONSULTANT'S NAME

mijares ● mora
ARCHITECTS INC.
111 N. FESTIVAL
EL PASO, TEXAS 79912
TEL: 915-542-1980
FAX: 915-542-1994

ARCHITECT'S SEAL

STATE OF TEXAS
ASHER N. DAVID
119023
MAY 31, 2016
LICENSED
PROFESSIONAL ENGINEER

SCALE

DATE:	MAY 2016
DESIGN BY	P.C.
DRAWN BY	P.C.
CHKD. BY	C.S.
APPD. BY	J.M.
JOB NO.	201370

PROJECT NAME

EL PASO INTERNATIONAL AIRPORT
CHECKED BAGGAGE INSPECTION SYSTEM
6701 CONVAIR ROAD
EL PASO, TEXAS

EL PASO INTERNATIONAL AIRPORT

CITY OF EL PASO

SHEET TITLE

BHS PHASING – PHASE 4

B6.40

FILE NO. 238512

SHEET OF

FOR BIDDING & PERMITTING ONLY, NOT FOR CONSTRUCTION PURPOSES.

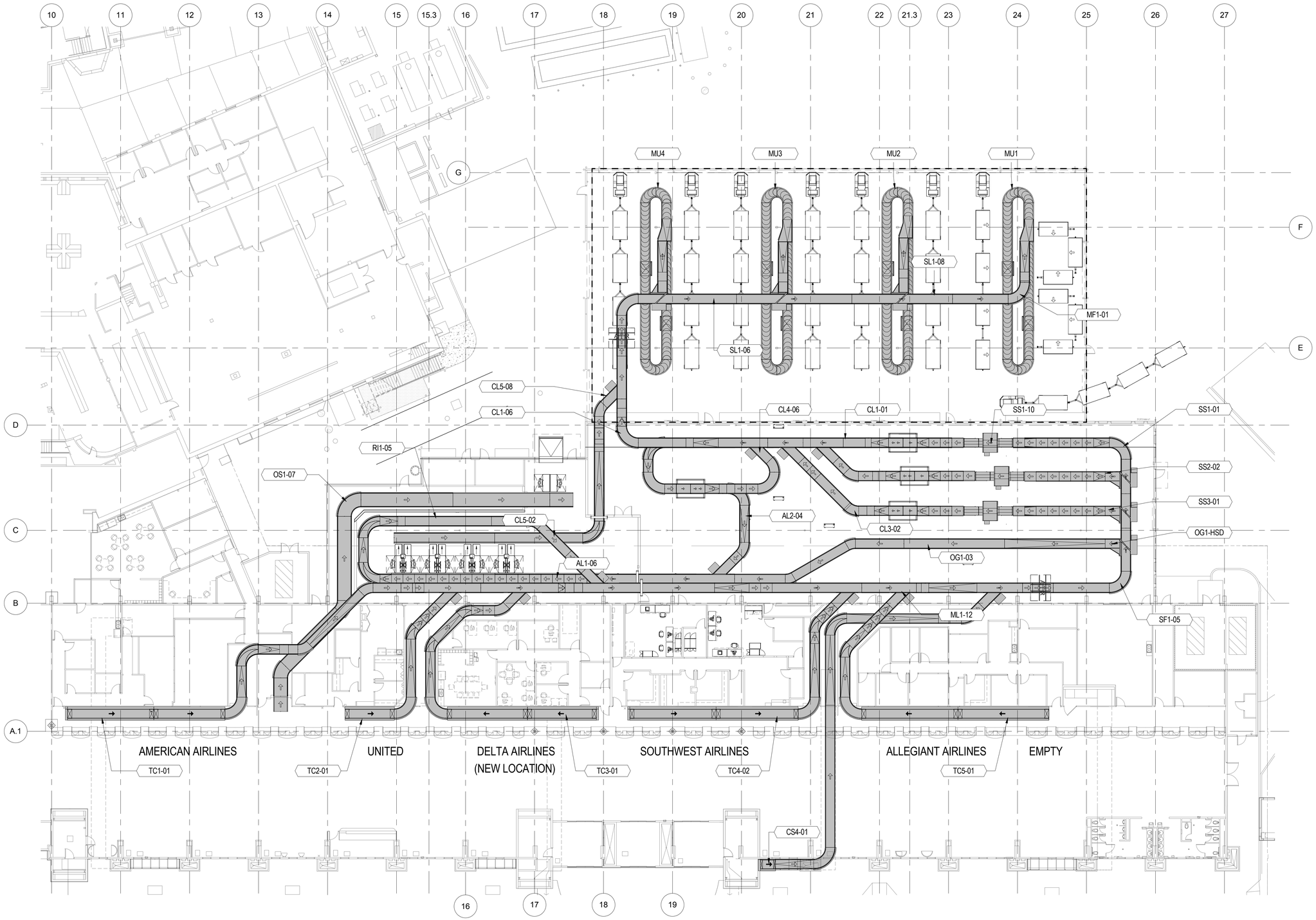

1 PHASING - PHASE 5 - PROPOSED BHS PLAN INSTALL
1/16" = 1'-0"

PLAN NORTH

PHASING NOTES: PHASE 5 SCOPE

MAXIMUM DURATION:	3 MONTHS
PHASE PREDECESSOR:	PHASE 4
CONCURRENT WORK:	NONE

CONVEYOR SUBSYSTEMS INSTALLED:

TEMPORARY LINES:	TML, TMF, TMU
TSA EQUIPMENT:	(4) EDS MACHINES & ASSOCIATED EQUIPMENT

LEGEND

NOTES

BHS PHASING NOTES:

1) BHS CONTRACTOR SHALL ABIDE BY ALL RULES AND GUIDELINES SET ON ARCHITECTURAL PLANS - PHASING NOTES. REFER TO ARCH'L PHASING PLANS AND NOTES.

2) COORDINATE WITH OTHER DISCIPLINES TO MAINTAIN BHS CONVEYOR RIGHT-OF-WAY.

BHS PHASING KEY NOTES:

1. INSTALL ALL MOTOR CONTROL PANELS ON PEDESTALS
2. COORDINATE PLACEMENT OF NEW EDS MACHINES WITH TSA AND EDS MACHINE MANUFACTURER.

BHS PHASING NOTES:
Phase 5 Operations

OPERATIONS:
- CHECK-IN: New
- SCREENING: New
- MAKE-UP: New

CONSTRUCTION:
- Decommision temporary Stand Alone EDS Screening machines
- Remove temporary conveyors and make-up device
- Store temporary conveyors and make-up parts for spare parts

TESTING:
- INTERNAL: BHSC and Owners acceptance testing completed
- TSA: Pre-ISAT, TRR, and ISAT completed
- GENERAL: System wide testing completed

REFERENCES – BENCHMARK

DATE	REVISIONS	BY

CONSULTANT'S NAME

mijares ● mora
ARCHITECTS INC.
111 N. FESTIVAL
EL PASO, TEXAS 79912
TEL: 915-542-1989
FAX: 915-542-1994

ARCHITECT'S SEAL

STATE OF TEXAS
ASHER N. DAVID
119023
MAY 31, 2016
LICENSED
PROFESSIONAL ENGINEER

SCALE

DATE:	MAY 2016
DESIGN BY	P.C.
DRAWN BY	P.C.
CHKD. BY	C.S.
APPD. BY	J.M.
JOB NO.	201370

PROJECT NAME

EL PASO INTERNATIONAL AIRPORT
CHECKED BAGGAGE INSPECTION SYSTEM

6701 CONVAIR ROAD EL PASO, TEXAS

EL PASO INTERNATIONAL AIRPORT

CITY OF EL PASO

SHEET TITLE

BHS PHASING – PHASE 5

B6.50

FILE NO. 238512

SHEET OF

FOR BIDDING & PERMITTING ONLY, NOT FOR CONSTRUCTION PURPOSES.

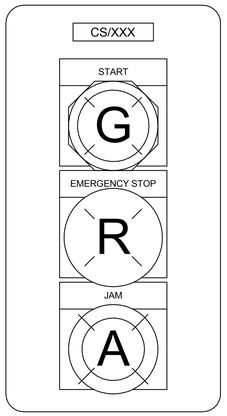

TRANSPORT CONVEYOR

1 BHS CONTROL STATION TYPE 1
12" = 1'-0"

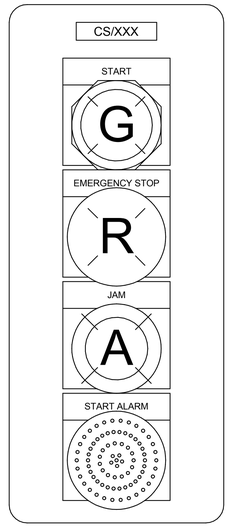

TICKET COUNTER TAIL END

2 BHS CONTROL STATION TYPE 2
12" = 1'-0"

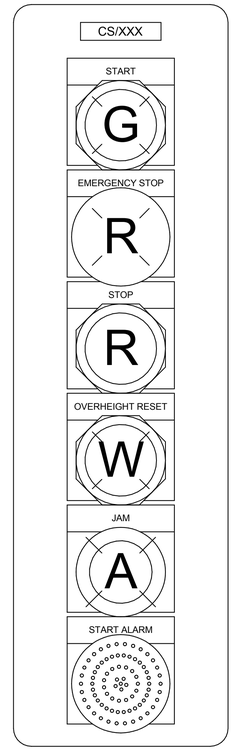

TICKET COUNTER HEAD END

3 BHS CONTROL STATION TYPE 3
12" = 1'-0"

CONTROL PANEL LEGEND

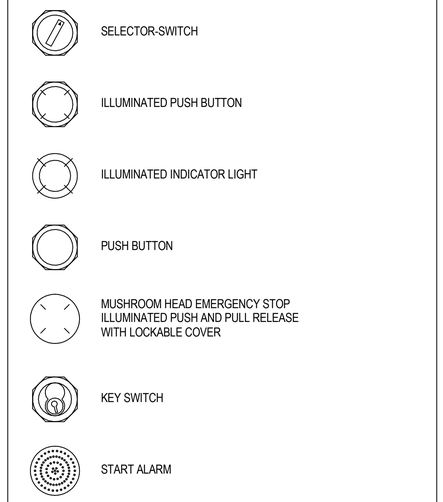

CONTROL PANEL OPERATOR ABBREVIATIONS

R - RED, A - AMBER, G - GREEN, Y - YELLOW,
W - WHITE, B - BLACK, BL - BLUE, GY - GRAY

NOTES:
1. BHS EQUIPMENT CONTRACTOR SHALL PROVIDE ANY ADDITIONAL EMERGENCY STOP CONTROL STATIONS THAT MAY BE REQUIRED TO MEET CODE AND TO PROVIDE A SAFE WORKING ENVIRONMENT.
2. AS A MINIMUM, PROVIDE ONE EMERGENCY STOP CONTROL STATION ON EACH SEGMENT OF PLATFORM.
3. ALL CONTROL STATIONS SHALL BE LOCATED ON THE PLATFORM SIDE OF THE CONVEYORS.

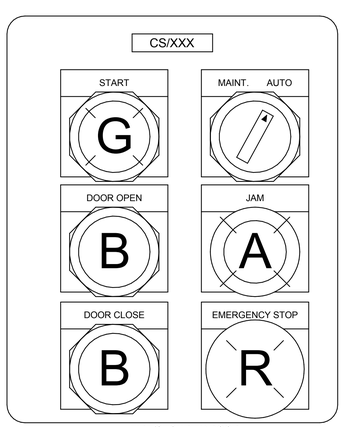

FIRE/SECURITY DOOR

4 BHS CONTROL STATION TYPE 4
12" = 1'-0"

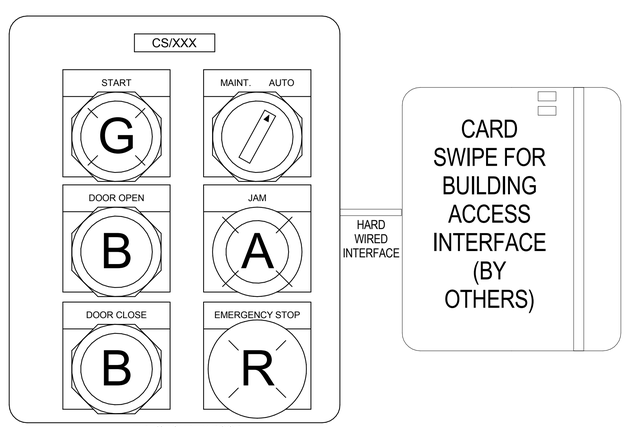

FIRE/SECURITY DOOR

4a BHS CONTROL STATION TYPE 4a
12" = 1'-0"

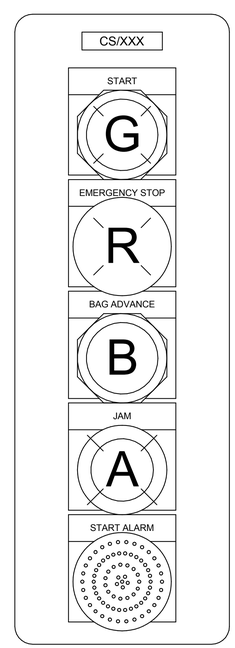

MANUAL ENCODE AND ETD

5 BHS CONTROL STATION TYPE 5
12" = 1'-0"

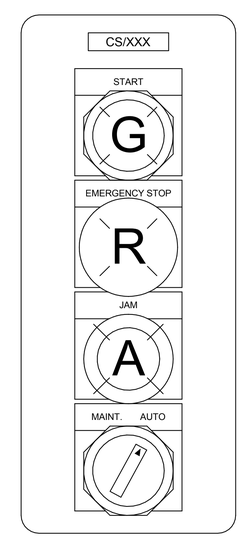

HIGH SPEED PADDLE DIVERTER

6 BHS CONTROL STATION TYPE 6
12" = 1'-0"

REFERENCES – BENCHMARK

DATE	REVISIONS	BY

CONSULTANT'S NAME

mijares ● mora
ARCHITECTS INC.
111 N. FESTIVAL
EL PASO, TEXAS 79912
TELEPHONE: 915-542-1989
FAX: 915-542-1594

ARCHITECT'S SEAL

STATE OF TEXAS
ASHER N. DAVID
119923
MAY 31, 2016
LICENSED
PROFESSIONAL ENGINEER

SCALE

DATE	MAY 2016
DESIGN BY	P.C.
DRAWN BY	P.C.
CHKD. BY	C.S.
APPD. BY	J.M.
JOB NO.	201370

PROJECT NAME

EL PASO INTERNATIONAL AIRPORT
CHECKED BAGGAGE INSPECTION SYSTEM

6701 CONVAIR ROAD EL PASO, TEXAS

EL PASO INTERNATIONAL AIRPORT

CITY OF EL PASO

SHEET TITLE
CONTROL STATION DETAILS

B7.00
FILE NO. 238512
SHEET OF

FOR BIDDING & PERMITTING ONLY, NOT FOR CONSTRUCTION PURPOSES.

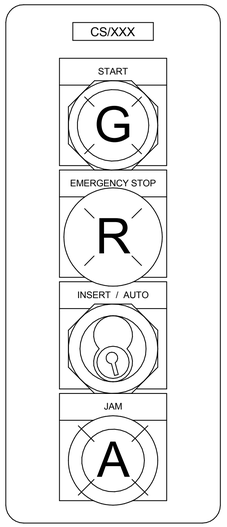

EDS ENTRANCE

7 BHS CONTROL STATION TYPE 7
12" = 1'-0"

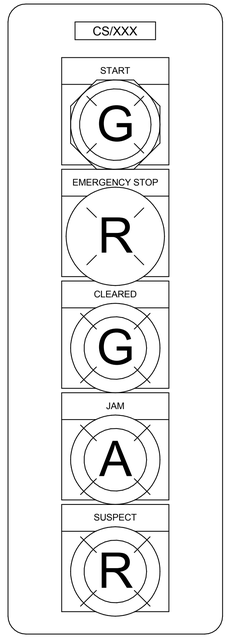

EDS EXIT

8 BHS CONTROL STATION TYPE 8
12" = 1'-0"

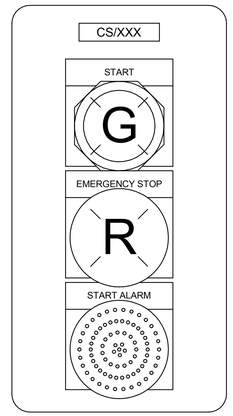

CLEAR BAG CONVEYOR AT ETD

9 BHS CONTROL STATION TYPE 9
12" = 1'-0"

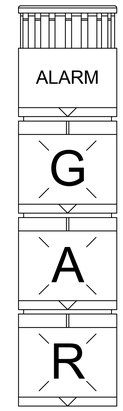

DECISION POINT
STACK LIGHT

10 BHS CONTROL STATION TYPE 10
12" = 1'-0"

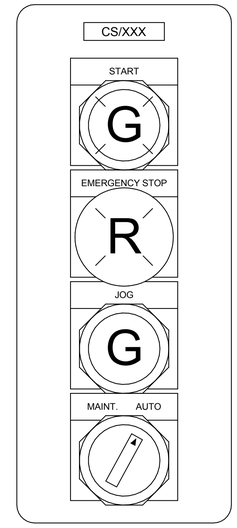

MAKE-UP DEVICE

11 BHS CONTROL STATION TYPE 11
12" = 1'-0"

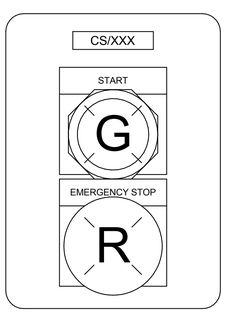

MAKE-UP DEVICE

12 BHS CONTROL STATION TYPE 12
12" = 1'-0"

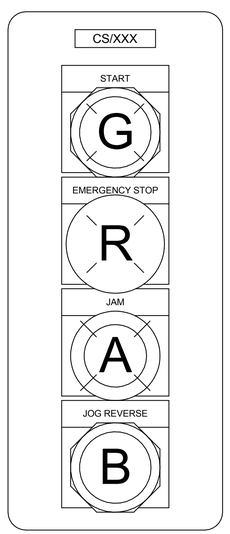

MERGES

13 BHS CONTROL STATION TYPE 13
12" = 1'-0"

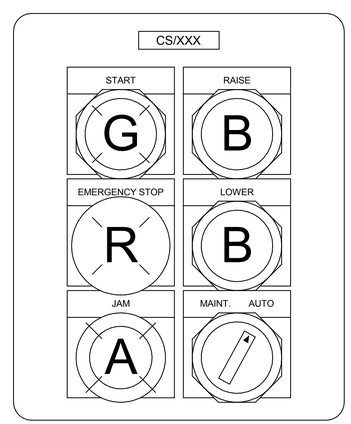

VERTICAL SORTATION DEVICE

14 BHS CONTROL STATION TYPE 14
12" = 1'-0"

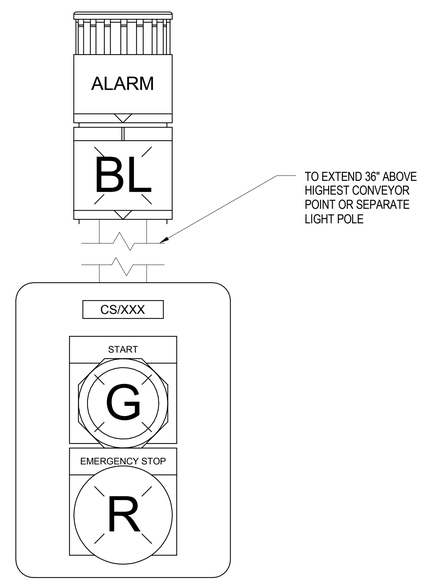

FAILSAFE

15 BHS CONTROL STATION TYPE 15
12" = 1'-0"

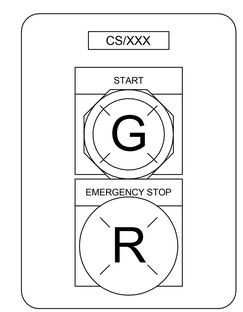

E-STOP (CROSS-OVERS)

16 BHS CONTROL STATION TYPE 16
12" = 1'-0"

REFERENCES – BENCHMARK

DATE	REVISIONS	BY

CONSULTANT'S NAME

mijares ● mora
ARCHITECTS INC.
111 N. FESTIVAL
EL PASO, TEXAS 79912
TELEPHONE: 915-542-1594
FAX: 915-542-1594

ARCHITECT'S SEAL

STATE OF TEXAS
ASHER N. DAVID
119923
MAY 31, 2016
LICENSED
PROFESSIONAL ENGINEER

SCALE

DATE	MAY 2016
DESIGN BY	P.C.
DRAWN BY	P.C.
CHKD. BY	C.S.
APPD. BY	J.M.
JOB NO.	201370

PROJECT NAME

EL PASO INTERNATIONAL AIRPORT
CHECKED BAGGAGE INSPECTION SYSTEM
6701 CONVAIR ROAD EL PASO, TEXAS

EL PASO INTERNATIONAL AIRPORT

CITY OF EL PASO

SHEET TITLE

CONTROL STATION DETAILS

B7.01

FILE NO. 238512

SHEET OF

FOR BIDDING & PERMITTING ONLY, NOT FOR CONSTRUCTION PURPOSES.

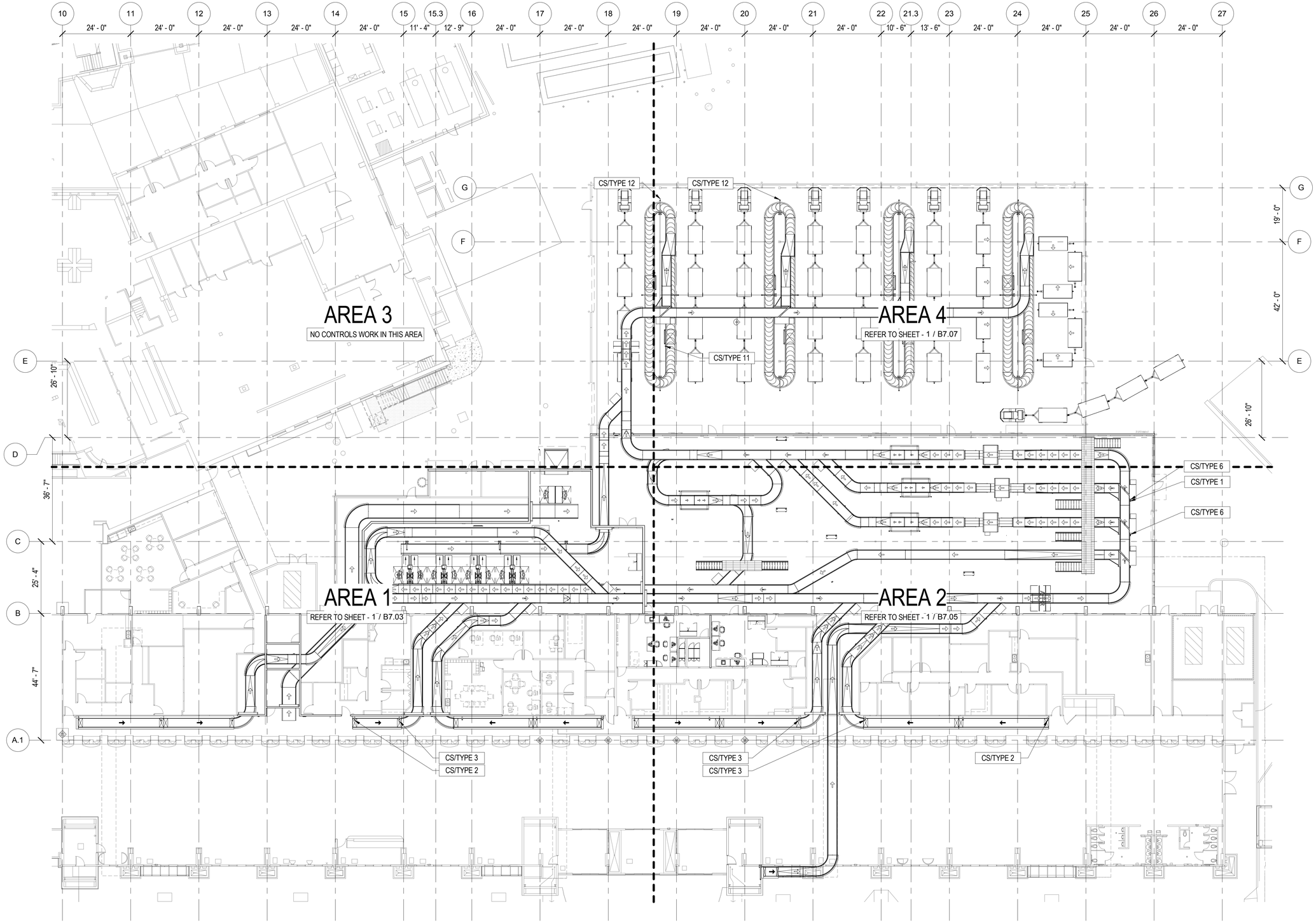

1 PROPOSED BHS LAYOUT - OVERALL - SUBSYSTEM LAYOUT CONTROLS

1/16" = 1'-0"

LEGEND

NOTES

REFERENCES – BENCHMARK

DATE	REVISIONS	BY

CONSULTANTS NAME

mijares ● mora

ARCHITECTS INC.

111 N. FESTIVAL
EL PASO, TEXAS 79912
TEL: 915-542-1989
FAX: 915-542-1994

ARCHITECT'S SEAL

STATE OF TEXAS
ASHER N. DAVID
119923
MAY 31, 2016
LICENSED
PROFESSIONAL ENGINEER

SCALE

DATE	MAY 2016
DESIGN BY	P.C.
DRAWN BY	P.C.
CHKD. BY	C.S.
APPD. BY	J.M.
JOB NO.	201370

PROJECT NAME

EL PASO INTERNATIONAL AIRPORT
CHECKED BAGGAGE INSPECTION SYSTEM

6701 CONVAIR ROAD EL PASO, TEXAS

EL PASO INTERNATIONAL AIRPORT

CITY OF EL PASO

SHEET TITLE

SUBSYSTEM E-STOP ZONES AND CONTROLS – OVERVIEW

B7.02

FILE NO. 238512

SHEET OF

FOR BIDDING & PERMITTING ONLY, NOT FOR CONSTRUCTION PURPOSES.

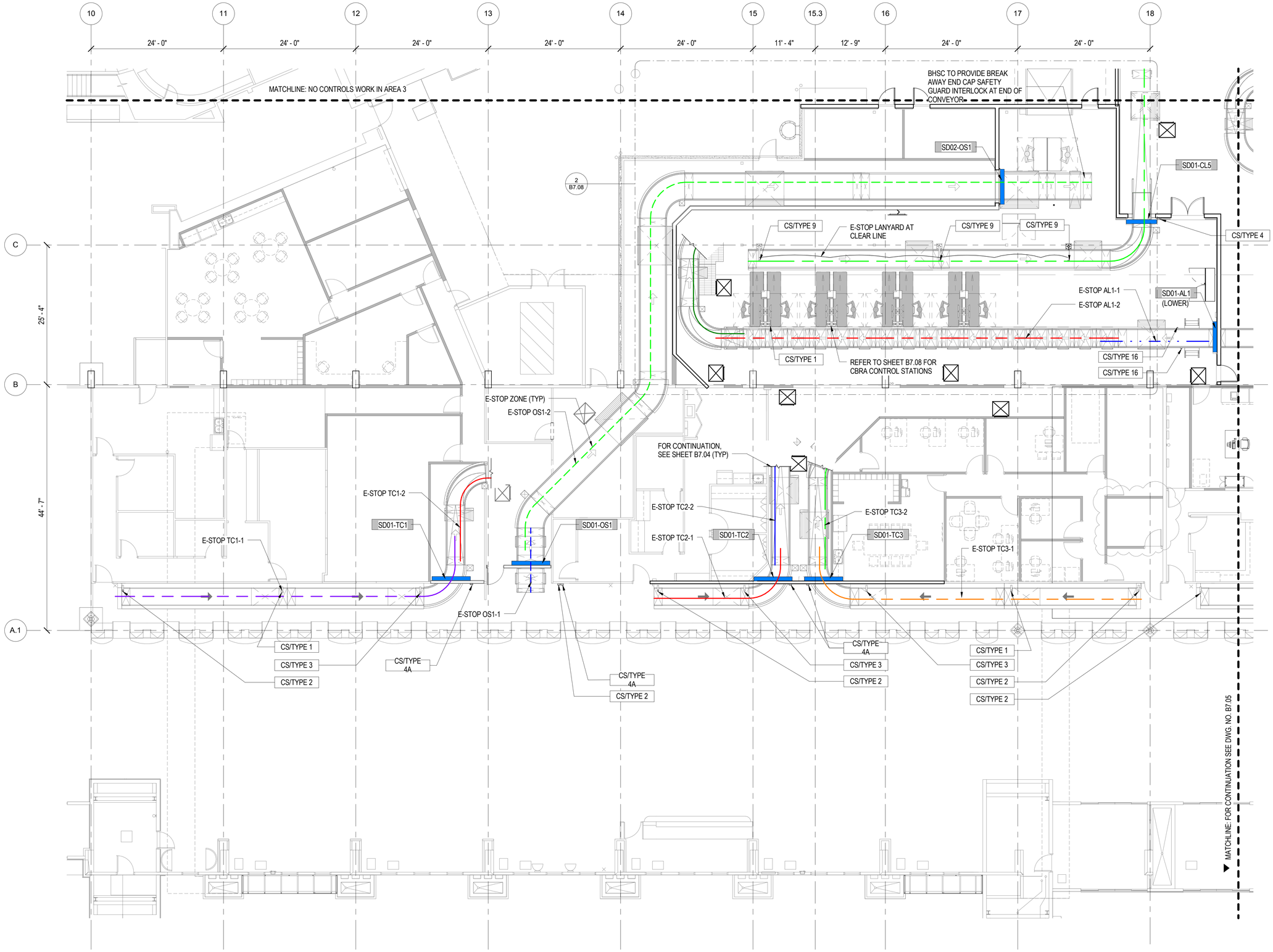

1 PROPOSED BHS LAYOUT - AREA 1 - SUBSYSTEM LAYOUT CONTROLS - LOWER CONVEYORS

1/8" = 1'-0"

PLAN NORTH

LEGEND

FIRE/SECURITY DOOR LEGEND

FD/SD01-XXX	FIRE/SECURITY DOOR - REF. SHEET B8XX FOR DETAIL
FD01-XXX	FIRE DOOR - REF. SHEET B8XX FOR DETAIL
SD01-XXX	SECURITY DOOR
EX	EXISTING FIRE/SECURITY DOOR
	NEW DOOR

SD01-XXX
- ASSOCIATED CONVEYOR SUBSYSTEM
- DOOR NUMBER (IF MULTIPLE ON SAME SUBSYSTWM
- TYPE OF DOOR (SEE ABOVE)

NOTE: PROVIDE FIRE SHUTTER UL RATING TO MATCH PARTITION UL ASSEMBLIES AS SHOWN ON THE ARCHITECTURE PARTITION DRAWINGS

NOTES

- E-STOP AL1-1
- E-STOP AL1-2
- E-STOP CL5
- E-STOP CS1
- E-STOP ML1
- E-STOP TC1
- E-STOP TC2
- E-STOP TC3

REFERENCES – BENCHMARK

DATE	REVISIONS	BY

CONSULTANT'S NAME

mijares ● mora
ARCHITECTS INC.
111 N. FESTIVAL
EL PASO, TEXAS 79912
TEL: 915-542-1800
FAX: 915-542-1594

ARCHITECT'S SEAL

STATE OF TEXAS
ASHER N. DAVID
119923
MAY 31, 2016
LICENSED
PROFESSIONAL ENGINEER

SCALE

DATE	MAY 2016
DESIGN BY	P.C.
DRAWN BY	P.C.
CHKD. BY	C.S.
APPD. BY	J.M.
JOB NO.	201370

PROJECT NAME

EL PASO INTERNATIONAL AIRPORT
CHECKED BAGGAGE INSPECTION SYSTEM

6701 CONVAIR ROAD — EL PASO, TEXAS

EL PASO INTERNATIONAL AIRPORT

CITY OF EL PASO

SHEET TITLE

SUBSYSTEM E–STOP ZONES AND CONTROLS – AREA 1 LOWER CONVEYORS

B7.03

FILE NO. 238512

SHEET OF

FOR BIDDING & PERMITTING ONLY, NOT FOR CONSTRUCTION PURPOSES.

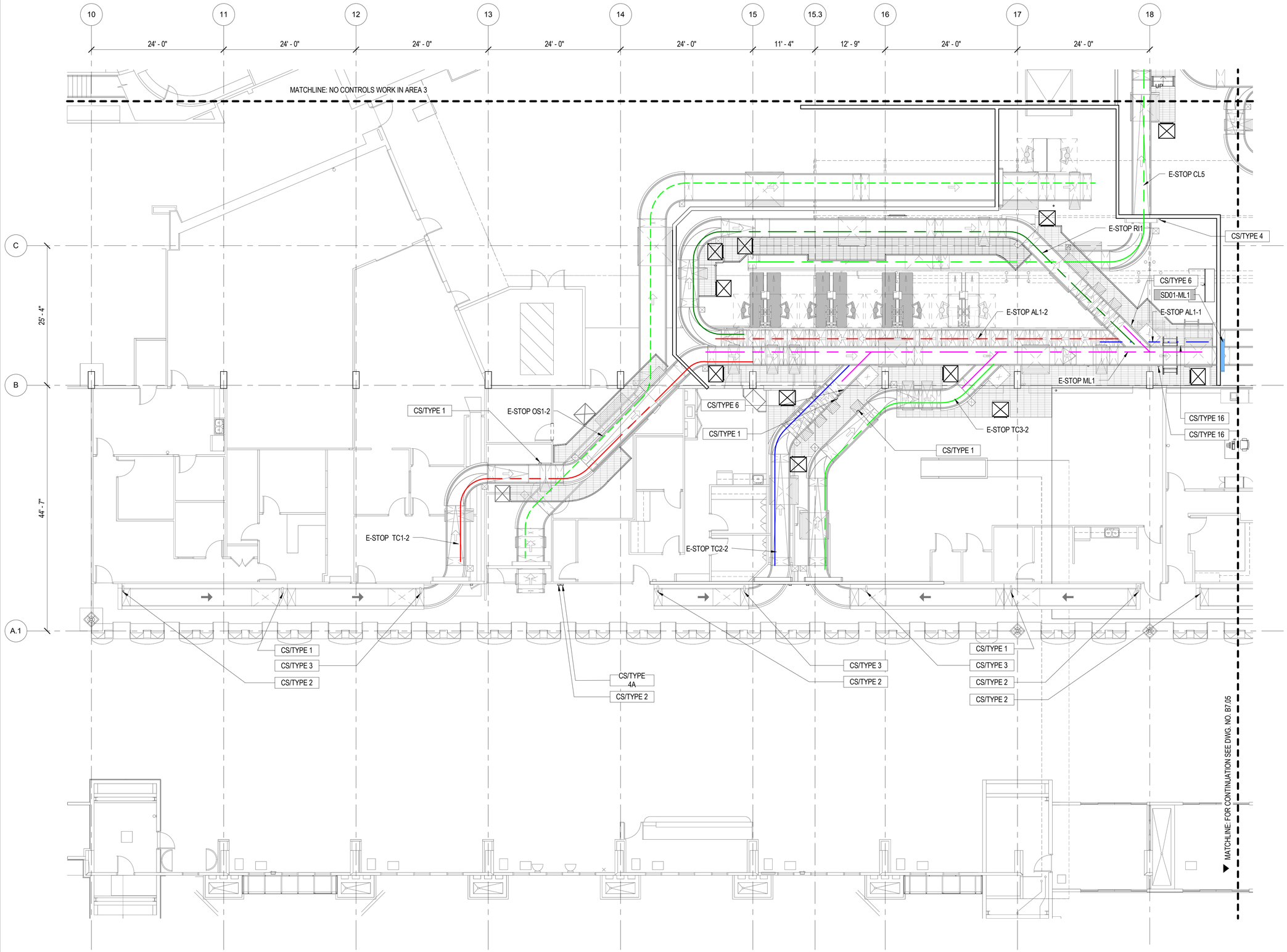

1 PROPOSED BHS LAYOUT - AREA 1 - SUBSYSTEM LAYOUT CONTROLS

1/8" = 1'-0"

LEGEND

FIRE/SECURITY DOOR LEGEND

FD/SD01-XXX	FIRE/SECURITY DOOR - REF. SHEET B8XX FOR DETAIL
FD01-XXX	FIRE DOOR - REF. SHEET B8XX FOR DETAIL
SD01-XXX	SECURITY DOOR
EX	EXISTING FIRE/SECURITY DOOR
	NEW DOOR

SD01-XXX
- ASSOCIATED CONVEYOR SUBSYSTEM
- DOOR NUMBER (IF MULTIPLE ON SAME SUBSYSTWM
- TYPE OF DOOR (SEE ABOVE)

NOTE: PROVIDE FIRE SHUTTER UL RATING TO MATCH PARTITION UL ASSEMBLIES AS SHOWN ON THE ARCHITECTURE PARTITION DRAWINGS

NOTES

- E-STOP AL1-1
- E-STOP AL1-2
- E-STOP CL5
- E-STOP CS1
- E-STOP ML1
- E-STOP TC1
- E-STOP TC2
- E-STOP TC3

REFERENCES – BENCHMARK

DATE	REVISIONS	BY

CONSULTANT'S NAME

mijares ● mora
ARCHITECTS INC.
111 N. FESTIVAL
EL PASO, TEXAS 79912
TEL: 915-542-9800
FAX: 915-542-1594

ARCHITECT'S SEAL

STATE OF TEXAS
ASHER N. DAVID
119023
MAY 31, 2016
LICENSED
PROFESSIONAL ENGINEER

SCALE

DATE	MAY 2016
DESIGN BY	P.C.
DRAWN BY	P.C.
CHKD. BY	C.S.
APPD. BY	J.M.
JOB NO.	201370

PROJECT NAME

EL PASO INTERNATIONAL AIRPORT
CHECKED BAGGAGE INSPECTION SYSTEM

6701 CONVAIR ROAD EL PASO, TEXAS

EL PASO INTERNATIONAL AIRPORT

CITY OF EL PASO

SHEET TITLE

SUBSYSTEM E–STOP ZONES AND CONTROLS – AREA 1 UPPER CONVEYORS

B7.04

FILE NO. 238512

SHEET OF

FOR BIDDING & PERMITTING ONLY, NOT FOR CONSTRUCTION PURPOSES.

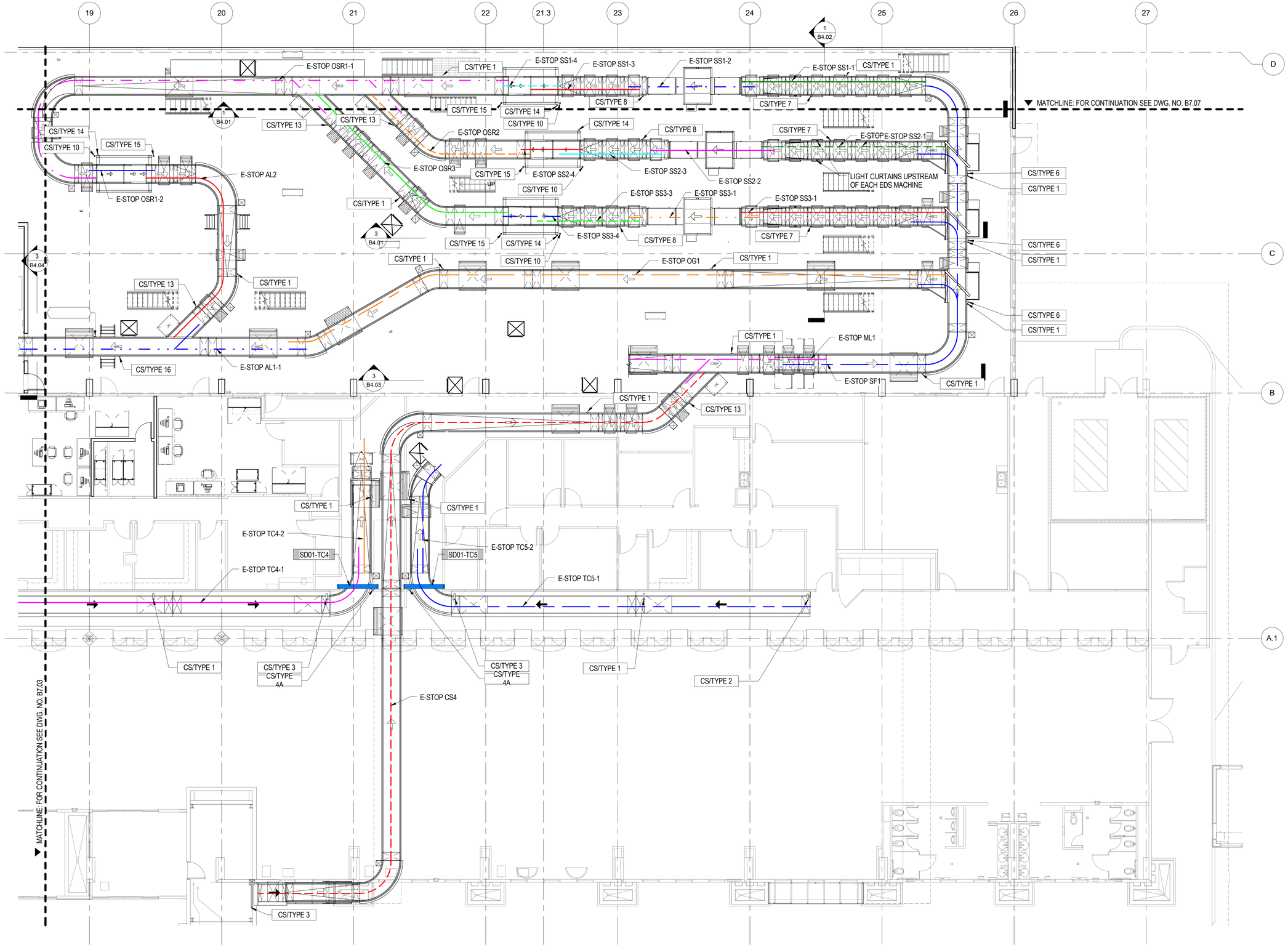

1 CONTROLS BHS LAYOUT - AREA 2 - LOWER CONVEYORS

1/8" = 1'-0"

PLAN NORTH

LEGEND

FIRE/SECURITY DOOR LEGEND

FD/SD01-XXX	FIRE/SECURITY DOOR - REF. SHEET B8XX FOR DETAIL
FD01-XXX	FIRE DOOR - REF. SHEET B8XX FOR DETAIL
SD01-XXX	SECURITY DOOR
EX	EXISTING FIRE/SECURITY DOOR
	NEW DOOR

SD01-XXX
- ASSOCIATED CONVEYOR SUBSYSTEM
- DOOR NUMBER (IF MULTIPLE ON SAME SUBSYSTWM
- TYPE OF DOOR (SEE ABOVE)

NOTE: PROVIDE FIRE SHUTTER UL RATING TO MATCH PARTITION UL ASSEMBLIES AS SHOWN ON THE ARCHITECTURE PARTITION DRAWINGS

NOTES

- E-STOP AL1-1
- E-STOP AL2
- E-STOP CS4
- E-STOP ML1
- E-STOP OG1
- E-STOP OSR1-1
- E-STOP OSR1-2
- E-STOP OSR2
- E-STOP OSR3
- E-STOP SF1
- E-STOP SS1-1
- E-STOP SS1-2
- E-STOP SS1-3
- E-STOP SS1-4
- E-STOP SS2-1
- E-STOP SS2-2
- E-STOP SS2-3
- E-STOP SS2-4
- E-STOP SS3-1
- E-STOP SS3-2
- E-STOP SS3-3
- E-STOP SS3-4
- E-STOP TC4
- E-STOP TC5

REFERENCES – BENCHMARK

DATE	REVISIONS	BY

CONSULTANT'S NAME

mijares ● mora
ARCHITECTS INC.
111 N. FESTIVAL
EL PASO, TEXAS 79912
TEL: 915-542-1800
FAX: 915-542-1594

ARCHITECT'S SEAL

STATE OF TEXAS
ASHER N. DAVID
119923
MAY 31, 2016
LICENSED
PROFESSIONAL ENGINEER

SCALE

DATE	MAY 2016
DESIGN BY	P.C.
DRAWN BY	P.C.
CHKD. BY	C.S.
APPD. BY	J.M.
JOB NO.	201370

PROJECT NAME

EL PASO INTERNATIONAL AIRPORT
CHECKED BAGGAGE INSPECTION SYSTEM

6701 CONVAIR ROAD EL PASO, TEXAS

EL PASO INTERNATIONAL AIRPORT

CITY OF EL PASO

SHEET TITLE

SUBSYSTEM E-STOP ZONES AND CONTROLS – AREA 2 LOWER CONVEYORS

B7.05

FILE NO. 238512

SHEET OF

FOR BIDDING & PERMITTING ONLY, NOT FOR CONSTRUCTION PURPOSES.

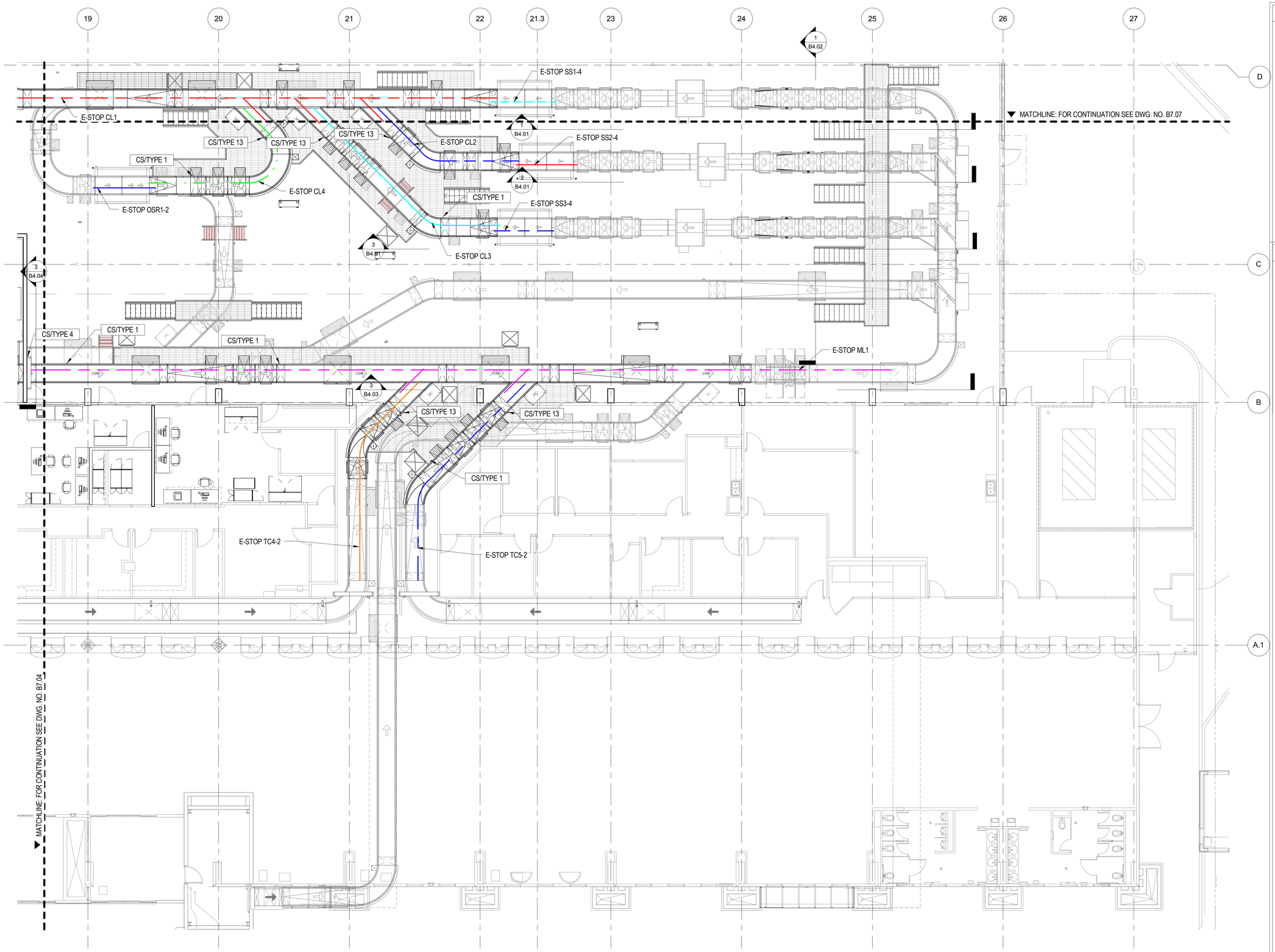

1 CONTROLS BHS LAYOUT - AREA 2 - UPPER CONVEYORS
1/8" = 1'-0"

PLAN NORTH

LEGEND

NOTES

- E-STOP CL1
- E-STOP CL2
- E-STOP CL3
- E-STOP CL4
- E-STOP ML1
- E-STOP OSR1-2
- E-STOP SS1-4
- E-STOP SS2-4
- SE-STOP S3-4

REFERENCES – BENCHMARK

DATE	REVISIONS	BY

CONSULTANT'S NAME

mijares ● mora
ARCHITECTS INC.
111 N. FESTIVAL
EL PASO, TEXAS 79912
TEL: 915-542-9660
FAX: 915-542-1594

ARCHITECT'S SEAL

STATE OF TEXAS
ASHER N. DAVID
119923
MAY 31, 2016
LICENSED
PROFESSIONAL ENGINEER

SCALE

DATE	MAY 2016
DESIGN BY	P.C.
DRAWN BY	P.C.
CHKD. BY	C.S.
APPD. BY	J.M.
JOB NO.	201370

PROJECT NAME

EL PASO INTERNATIONAL AIRPORT
CHECKED BAGGAGE INSPECTION SYSTEM

6701 CONVAIR ROAD

EL PASO, TEXAS

EL PASO INTERNATIONAL AIRPORT

CITY OF EL PASO

SHEET TITLE

SUBSYSTEM E-STOP ZONES AND CONTROLS – AREA 2 UPPER CONVEYORS

B7.06

FILE NO. 238512

SHEET OF

FOR BIDDING & PERMITTING ONLY, NOT FOR CONSTRUCTION PURPOSES.

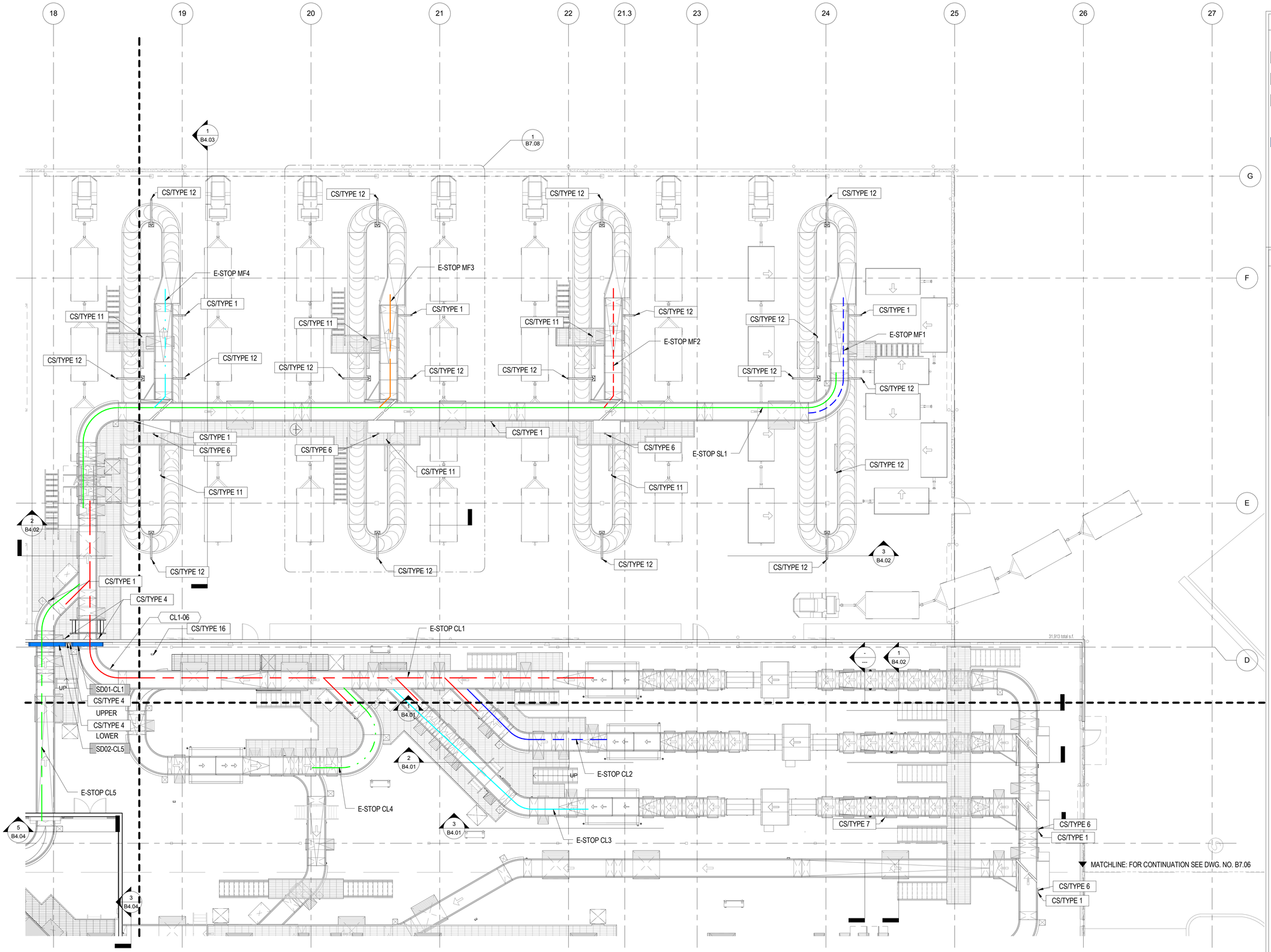

1 CONTROLS BHS LAYOUT - AREA 4

1/8" = 1'-0"

PLAN NORTH

LEGEND

FIRE/SECURITY DOOR LEGEND

FD/SD01-XXX	FIRE/SECURITY DOOR - REF. SHEET B8XX FOR DETAIL
FD01-XXX	FIRE DOOR - REF. SHEET B8XX FOR DETAIL
SD01-XXX	SECURITY DOOR
EX	EXISTING FIRE/SECURITY DOOR
	NEW DOOR

SD01-XXX
- ASSOCIATED CONVEYOR SUBSYSTEM
- DOOR NUMBER (IF MULTIPLE ON SAME SUBSYSTWM
- TYPE OF DOOR (SEE ABOVE)

NOTE: PROVIDE FIRE SHUTTER UL RATING TO MATCH PARTITION UL ASSEMBLIES AS SHOWN ON THE ARCHITECTURE PARTITION DRAWINGS

NOTES

- E-STOP CL1
- E-STOP CL2
- E-STOP CL3
- E-STOP CL4
- E-STOP CL5
- E-STOP MF1
- E-STOP MF2
- E-STOP MF3
- E-STOP MF4

REFERENCES – BENCHMARK

DATE	REVISIONS	BY

CONSULTANT'S NAME

mijares ● mora
ARCHITECTS INC.
111 N. FESTIVAL
EL PASO, TEXAS 79912
TEL: 915-542-1989
FAX: 915-542-1594

ARCHITECT'S SEAL

STATE OF TEXAS
ASHER N. DAVID
119023
MAY 31, 2016
LICENSED
PROFESSIONAL ENGINEER

SCALE

DATE	MAY 2016
DESIGN BY	P.C.
DRAWN BY	P.C.
CHKD. BY	C.S.
APPD. BY	J.M.
JOB NO.	201370

PROJECT NAME

EL PASO INTERNATIONAL AIRPORT
CHECKED BAGGAGE INSPECTION SYSTEM

6701 CONVAIR ROAD EL PASO, TEXAS

EL PASO INTERNATIONAL AIRPORT

CITY OF EL PASO

SHEET TITLE

SUBSYSTEM E-STOP ZONES AND CONTROLS – AREA 4

B7.07

FILE NO. 238512

SHEET OF

FOR BIDDING & PERMITTING ONLY, NOT FOR CONSTRUCTION PURPOSES.

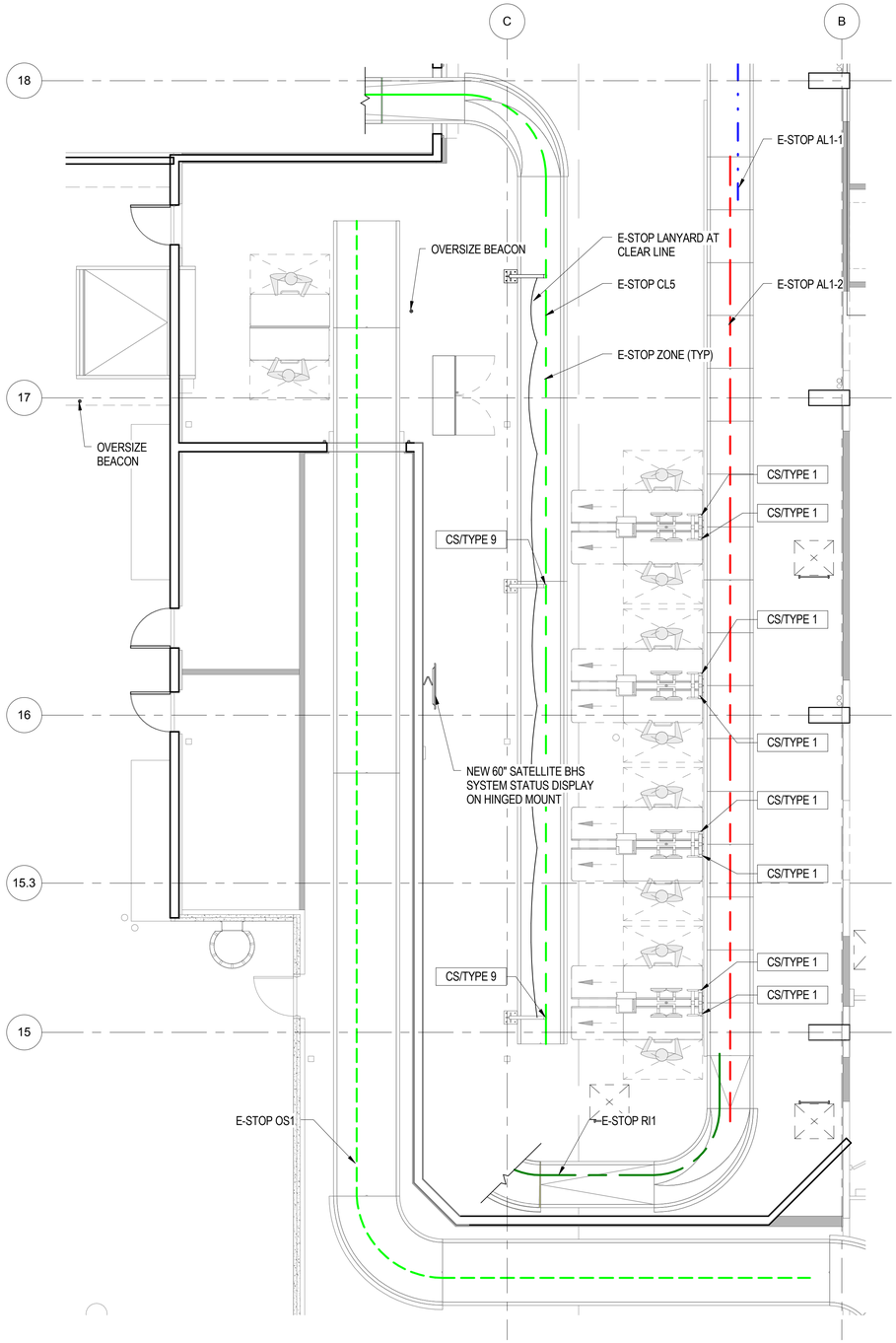

2 B7.03 CONTROLS BHS LAYOUT - AREA 1 - CBRA CONTROLS LAYOUT
3/16" = 1'-0"

PLAN NORTH

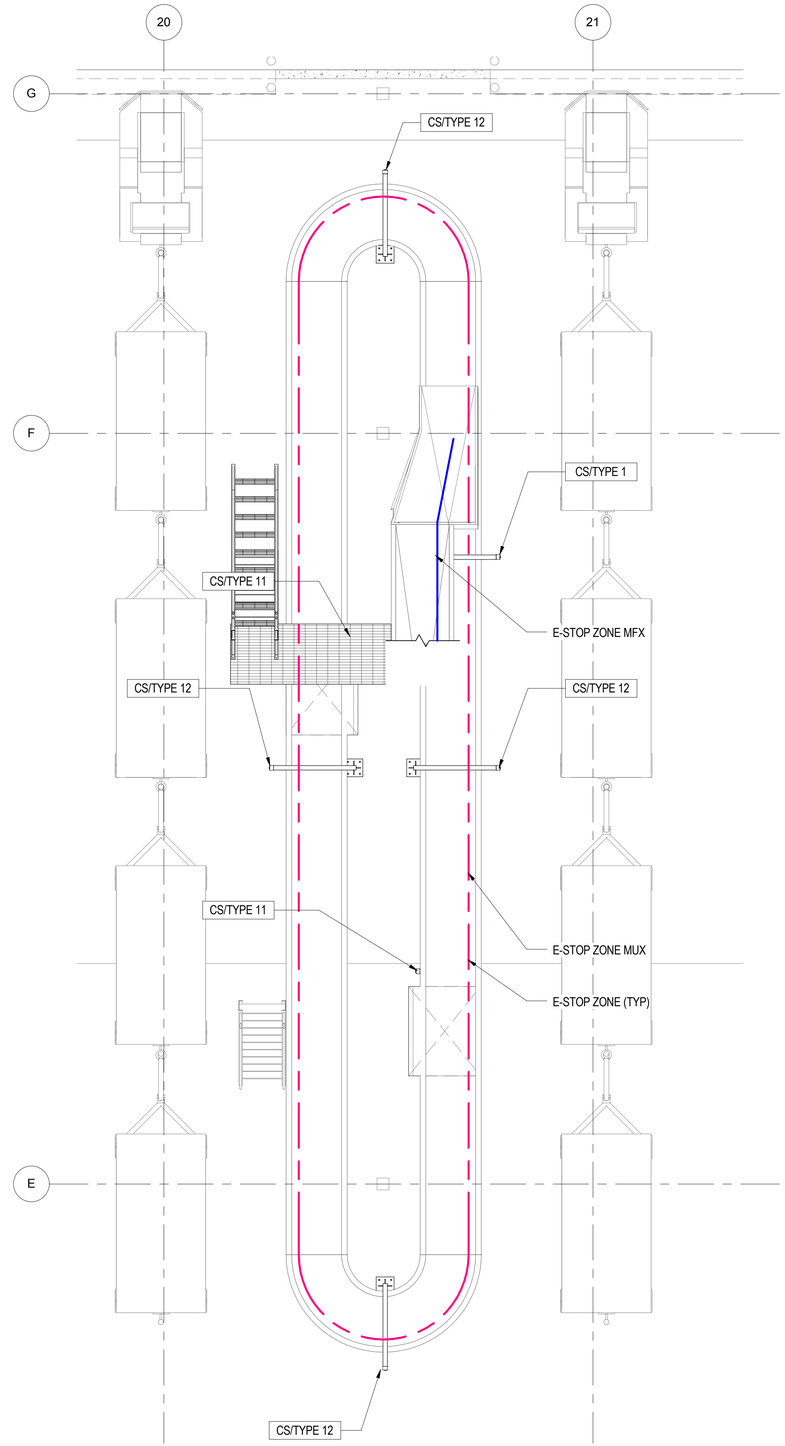

1 B7.07 CONTROLS BHS LAYOUT - AREA 4 - TYPICAL MAKE-UP LAYOUT
1/4" = 1'-0"

PLAN NORTH

BHS CONVEYOR - DOOR SCHEDULE

NEW ID	Description	Door Opening Height	Door Opening Width	Comments
SD01-AL1	Door - Vigneaux	4' - 6"	5' - 0"	SECURITY DOOR
SD01-CL5	Door - Vigneaux	4' - 8"	5' - 0"	SECURITY DOOR
SD01-OS1	Door - Vigneaux	6' - 0"	6' - 0"	SECURITY DOOR
SD01-TC1	Door - Vigneaux	4' - 6"	6' - 0"	SECURITY DOOR
SD01-ML1	Door - Vigneaux	4' - 6"	5' - 0"	SECURITY DOOR
SD02-OS1	Door - Vigneaux	4' - 6"	6' - 0"	SECURITY DOOR
SD01-TC2	Door - Vigneaux	4' - 6"	6' - 0"	SECURITY DOOR
SD01-TC3	Door - Vigneaux	4' - 6"	6' - 0"	SECURITY DOOR
SD01-TC4	Door - Vigneaux	4' - 6"	6' - 6"	SECURITY DOOR
SD01-TC5	Door - Vigneaux	4' - 6"	6' - 6"	SECURITY DOOR
SD02-CL5	Door - Vigneaux	4' - 6"	6' - 0"	SECURITY DOOR
SD01-CL1	Door - Vigneaux	4' - 6"	5' - 0"	SECURITY DOOR

Grand total: 12

REFERENCES – BENCHMARK

DATE	REVISIONS	BY

CONSULTANT'S NAME

mijares ● mora
ARCHITECTS INC.
111 N. FESTIVAL
EL PASO, TEXAS 79912
TEL: 915-542-1989
FAX: 915-542-1994

ARCHITECT'S SEAL

STATE OF TEXAS
ASHER N. DAVID
119923
MAY 31, 2016
LICENSED
PROFESSIONAL ENGINEER

SCALE

DATE	MAY 2016
DESIGN BY	P.C.
DRAWN BY	P.C.
CHKD. BY	C.S.
APPD. BY	J.M.
JOB NO.	201370

PROJECT NAME

EL PASO INTERNATIONAL AIRPORT
CHECKED BAGGAGE INSPECTION SYSTEM

6701 CONVAIR ROAD EL PASO, TEXAS

EL PASO INTERNATIONAL AIRPORT

CITY OF EL PASO

SHEET TITLE

SUBSYSTEM E-STOP ZONES AND CONTROLS – CBRA & MAKE-UP

B7.08

FILE NO. 238512

SHEET OF

FOR BIDDING & PERMITTING ONLY, NOT FOR CONSTRUCTION PURPOSES.

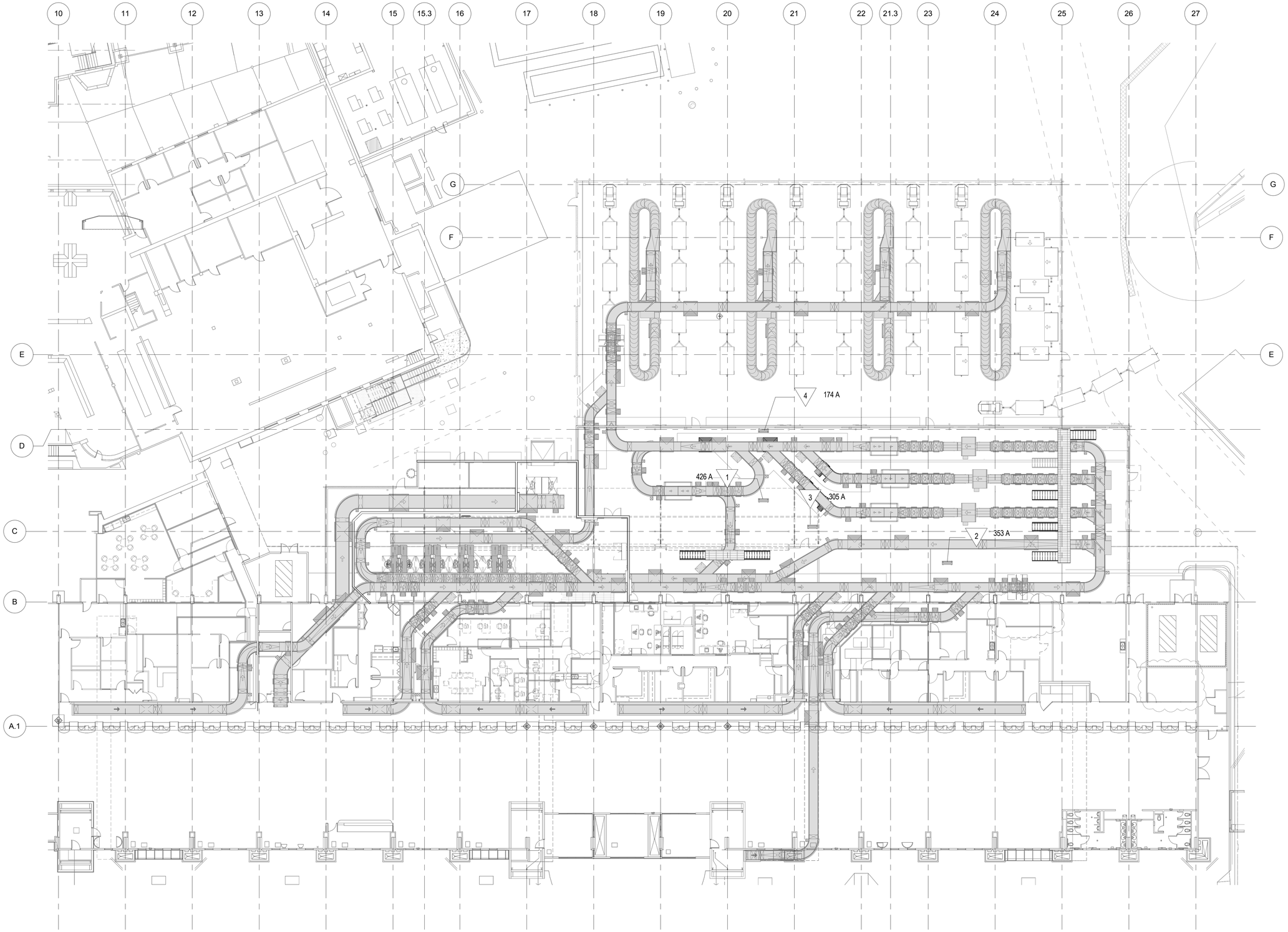

1 PROPOSED BHS MCP LOCATIONS - OVERALL

1/16" = 1'-0"

PLAN NORTH

LEGEND

NOTES

DISTRIBUTED I/O NOTES:

CONVEYORS ARE CONTROLLED WITH A DISTRIBUTED I/O SYSTEM. THIS IS A CENTRALIZED PLC DESIGN WITH A DISTRIBUTED I/O LAYOUT.

VARIABLE FREQUENCY DRIVE (VFD) COMPONENTS ARE INSTALLED REMOTELY AT DRIVE UNIT WHERE NECESSARY.

REFERENCES – BENCHMARK

DATE	REVISIONS	BY

CONSULTANTS NAME

mijares ● mora

ARCHITECTS INC.

111 N. FESTIVAL
EL PASO, TEXAS 79912
TEL: 915-542-9800
FAX: 915-542-1594

ARCHITECT'S SEAL

STATE OF TEXAS
ASHER N. DAVID
119023
MAY 31, 2016
LICENSED
PROFESSIONAL ENGINEER

SCALE

DATE	MAY 2016
DESIGN BY	P.C.
DRAWN BY	P.C.
CHKD. BY	C.S.
APPD. BY	J.M.
JOB NO.	201370

PROJECT NAME

EL PASO INTERNATIONAL AIRPORT
CHECKED BAGGAGE INSPECTION SYSTEM

6701 CONVAIR ROAD

EL PASO, TEXAS

EL PASO INTERNATIONAL AIRPORT

CITY OF EL PASO

SHEET TITLE

PROPOSED POWER DISTRIBUTION PLAN

B7.10

FILE NO. 238512

SHEET OF

FOR BIDDING & PERMITTING ONLY, NOT FOR CONSTRUCTION PURPOSES.

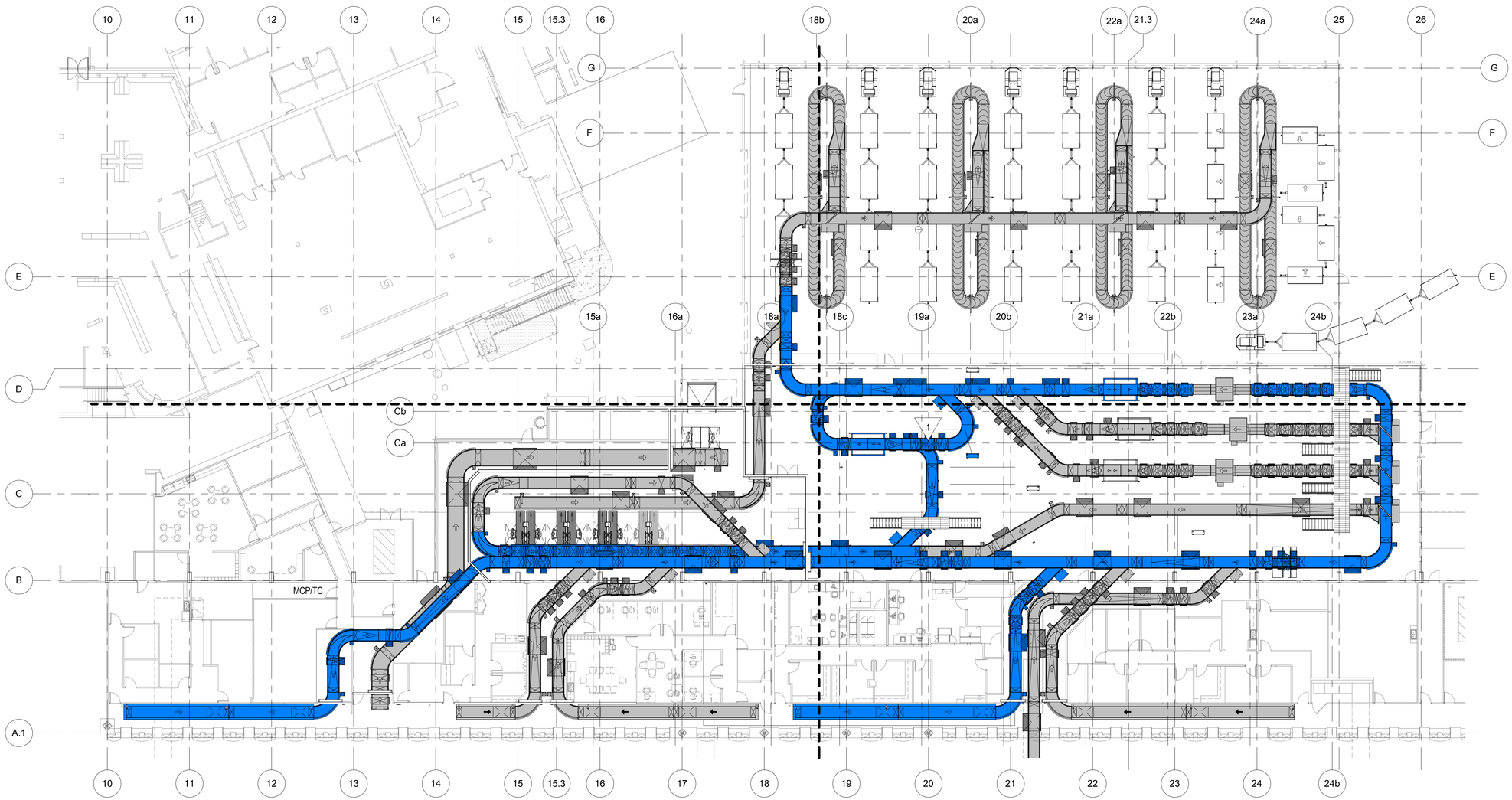

1 PROPOSED BHS PDP LOCATIONS - PDP 1
1/16" = 1'-0"

PLAN NORTH

DRAFT

PDP 1

PDP 1 - REQUIRES EMERGENCY POWER

SUBSYSTEMS:	TC1, ML1, TC4, SF1, SS1, OSR1, CL1, CL4, AL1, & AL2
FLA - 426 A	

LEGEND

CONVEYOR LEGEND

- CONVEYORS ASSOCIATED WITH PDP
- ASSOCIATED POWER DISTRIBUTION PANEL (PDP)

NOTES

DISTRIBUTED I/O NOTES:

CONVEYORS ARE CONTROLLED WITH A DISTRIBUTED I/O SYSTEM. THIS IS A CENTRALIZED PLC DESIGN WITH A DISTRIBUTED I/O LAYOUT.

VARIABLE FREQUENCY DRIVE (VFD) COMPONENTS ARE INSTALLED REMOTELY AT DRIVE UNIT WHERE NECESSARY.

REFERENCES – BENCHMARK

DATE	REVISIONS	BY

CONSULTANTS NAME

mijares ● mora
ARCHITECTS INC.
111 N. FESTIVAL
EL PASO, TEXAS 79912
TEL: 915-542-1989
FAX: 915-542-1994

ARCHITECT'S SEAL

STATE OF TEXAS
ASHER N. DAVID
119023
MAY 31, 2016
LICENSED
PROFESSIONAL ENGINEER

SCALE

DATE	MAY 2016
DESIGN BY	P.C.
DRAWN BY	P.C.
CHKD. BY	C.S.
APPD. BY	J.M.
JOB NO.	201370

PROJECT NAME

EL PASO INTERNATIONAL AIRPORT
CHECKED BAGGAGE INSPECTION SYSTEM

6701 CONVAIR ROAD EL PASO, TEXAS

EL PASO INTERNATIONAL AIRPORT

CITY OF EL PASO

SHEET TITLE

PROPOSED MCP PLAN – PDP 1

B7.11

FILE NO. 238512

SHEET OF

FOR BIDDING & PERMITTING ONLY, NOT FOR CONSTRUCTION PURPOSES.

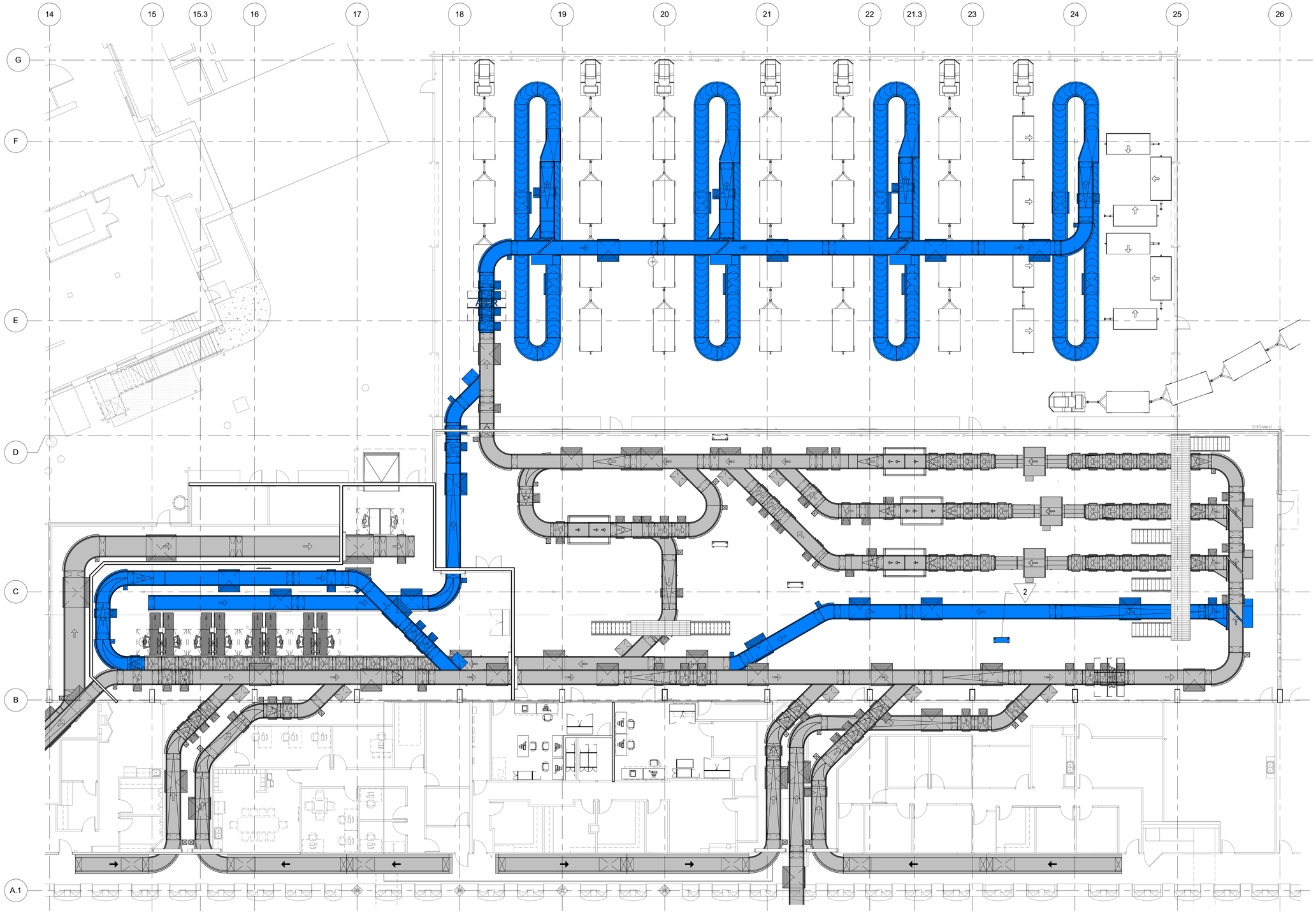

1 PROPOSED BHS MCP LOCATIONS - PDP 2
3/32" = 1'-0"

PLAN NORTH

DRAFT

PDP 2

PDP 2 - REQUIRES EMERGENCY POWER

SUBSYSTEMS:	RI1, CL5, OG1, SL1, MF1 - MF4, MU1 - MU4
FLA - 353 A	

LEGEND

CONVEYOR LEGEND

- CONVEYORS ASSOCIATED WITH PDP
- ASSOCIATED POWER DISTRIBUTION PANEL (PDP)

NOTES

DISTRIBUTED I/O NOTES:

CONVEYORS ARE CONTROLLED WITH A DISTRIBUTED I/O SYSTEM. THIS IS A CENTRALIZED PLC DESIGN WITH A DISTRIBUTED I/O LAYOUT.

VARIABLE FREQUENCY DRIVE (VFD) COMPONENTS ARE INSTALLED REMOTELY AT DRIVE UNIT WHERE NECESSARY.

REFERENCES – BENCHMARK

DATE	REVISIONS	BY

CONSULTANT'S NAME

mijares ● mora
ARCHITECTS INC.
111 N. FESTIVAL
EL PASO, TEXAS 79912
TEL: 915-542-1989
FAX: 915-542-1994

ARCHITECT'S SEAL

STATE OF TEXAS
ASHER N. DAVID
119923
MAY 31, 2016
LICENSED
PROFESSIONAL ENGINEER

SCALE

DATE	MAY 2016
DESIGN BY	P.C.
DRAWN BY	P.C.
CHKD. BY	C.S.
APPD. BY	J.M.
JOB NO.	201370

PROJECT NAME

EL PASO INTERNATIONAL AIRPORT
CHECKED BAGGAGE INSPECTION SYSTEM

6701 CONVAIR ROAD EL PASO, TEXAS

EL PASO INTERNATIONAL AIRPORT

CITY OF EL PASO

SHEET TITLE

PROPOSED MCP PLAN – PDP 2

B7.12

FILE NO. 238512

SHEET OF

FOR BIDDING & PERMITTING ONLY, NOT FOR CONSTRUCTION PURPOSES.

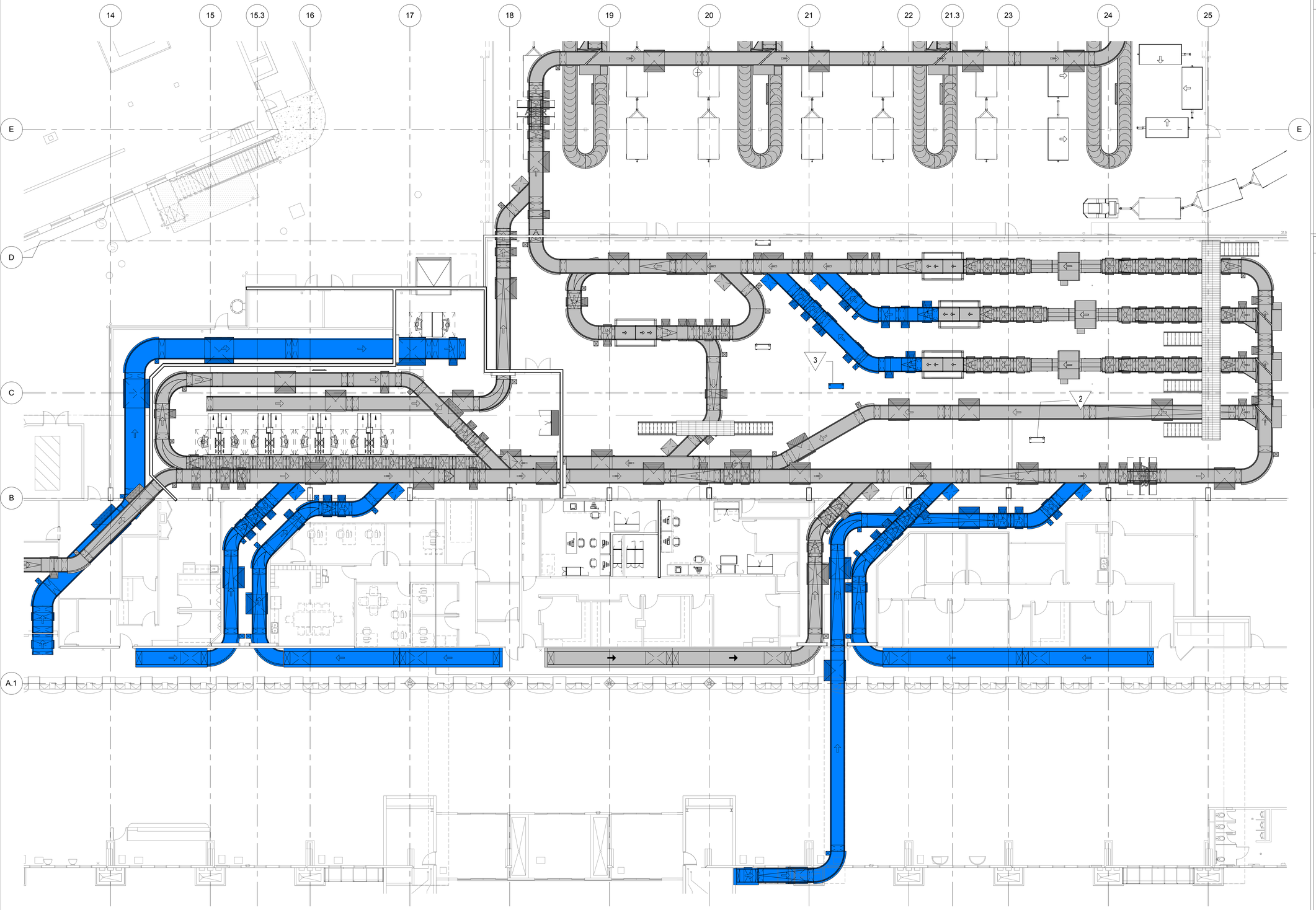

1 PROPOSED BHS PDP LOCATIONS - PDP 3
3/32" = 1'-0"

PLAN NORTH

DRAFT

PDP 3

SUBSYSTEMS:	TC2, TC3, TC5, CS4, OS1, OSR2, & OSR3
FLA - 305 A	

LEGEND

CONVEYOR LEGEND

- CONVEYORS ASSOCIATED WITH PDP
- ASSOCIATED POWER DISTRIBUTION PANEL (PDP)

NOTES

DISTRIBUTED I/O NOTES:

CONVEYORS ARE CONTROLLED WITH A DISTRIBUTED I/O SYSTEM. THIS IS A CENTRALIZED PLC DESIGN WITH A DISTRIBUTED I/O LAYOUT.

VARIABLE FREQUENCY DRIVE (VFD) COMPONENTS ARE INSTALLED REMOTELY AT DRIVE UNIT WHERE NECESSARY.

REFERENCES – BENCHMARK

DATE	REVISIONS	BY

CONSULTANT'S NAME

mijares ● mora
A R C H I T E C T S I N C.
111 N. FESTIVAL
EL PASO, TEXAS 79912
TEL: 915-542-1989
FAX: 915-542-1994

ARCHITECT'S SEAL

STATE OF TEXAS
ASHER N. DAVID
119923
MAY 31, 2016
LICENSED
PROFESSIONAL ENGINEER

SCALE

DATE	MAY 2016
DESIGN BY	P.C.
DRAWN BY	P.C.
CHKD. BY	C.S.
APPD. BY	J.M.
JOB NO.	201370

PROJECT NAME

EL PASO INTERNATIONAL AIRPORT
CHECKED BAGGAGE INSPECTION SYSTEM

6701 CONVAIR ROAD

EL PASO, TEXAS

EL PASO INTERNATIONAL AIRPORT

CITY OF EL PASO

SHEET TITLE

PROPOSED MCP PLAN – PDP 3

B7.13

FILE NO. 238512

SHEET OF

FOR BIDDING & PERMITTING ONLY, NOT FOR CONSTRUCTION PURPOSES.

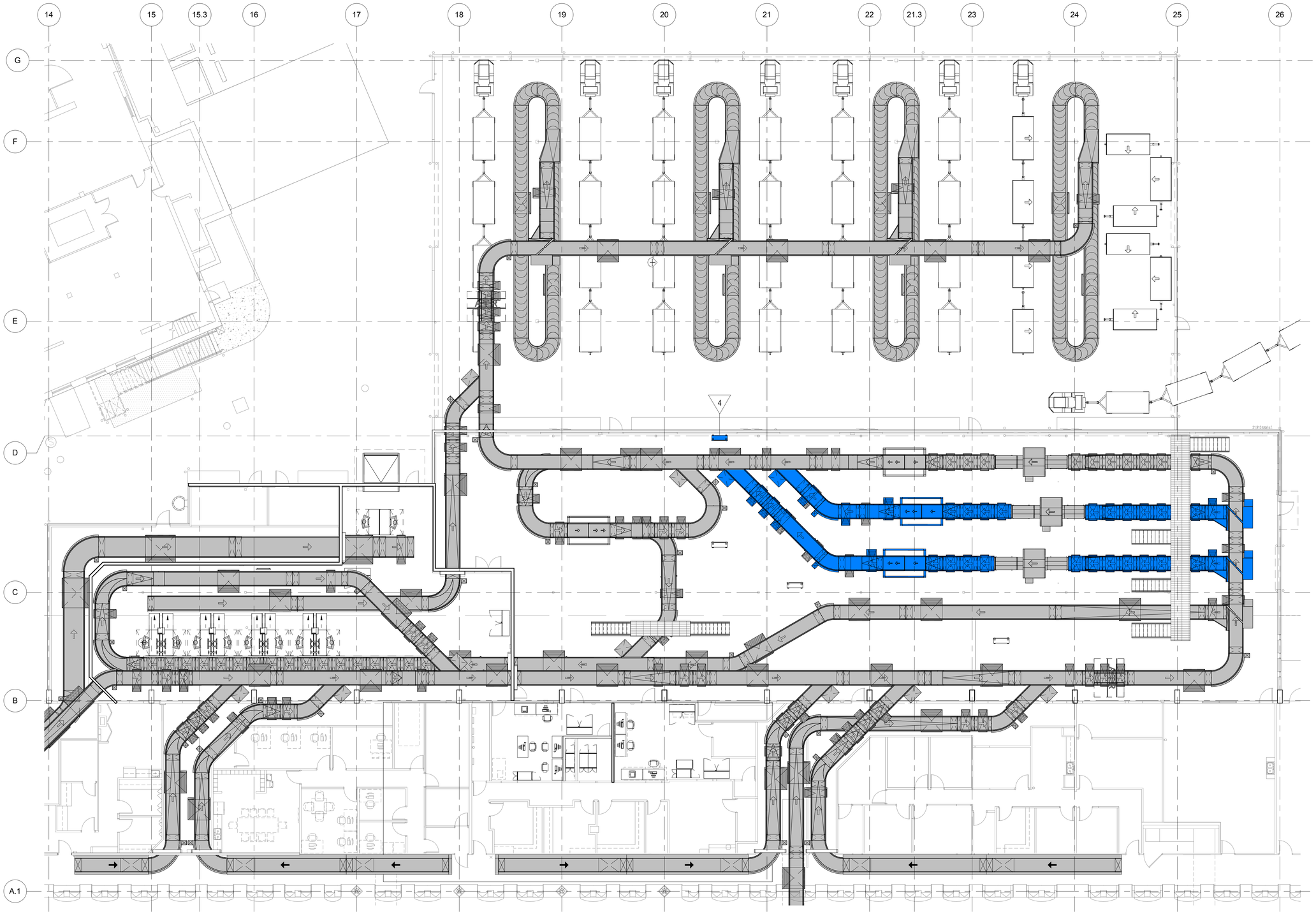

1 PROPOSED BHS MCP LOCATIONS - PDP 4
3/32" = 1'-0"

PLAN NORTH

DRAFT

PDP 4

SUBSYSTEMS:	CL2, CL3, SS2, & SS3
FLA - 174 A	

LEGEND

CONVEYOR LEGEND

- CONVEYORS ASSOCIATED WITH PDP
- ASSOCIATED POWER DISTRIBUTION PANEL (PDP)

NOTES

DISTRIBUTED I/O NOTES:

CONVEYORS ARE CONTROLLED WITH A DISTRIBUTED I/O SYSTEM. THIS IS A CENTRALIZED PLC DESIGN WITH A DISTRIBUTED I/O LAYOUT.

VARIABLE FREQUENCY DRIVE (VFD) COMPONENTS ARE INSTALLED REMOTELY AT DRIVE UNIT WHERE NECESSARY.

TOTAL PDP:

POWER DROPS:	LOAD (FLA)
PDP - 1	426 A
PDP - 2	353 A
PDP - 3	305 A
PDP - 4	174 A
TOTAL:	**1258 A**

REFERENCES – BENCHMARK

DATE	REVISIONS	BY

CONSULTANT'S NAME

mijares ● mora
ARCHITECTS INC.
111 N. FESTIVAL
EL PASO, TEXAS 79912
TEL: 915-542-1989
FAX: 915-542-1594

ARCHITECT'S SEAL

STATE OF TEXAS
ASHER N. DAVID
119923
MAY 31, 2016
LICENSED
PROFESSIONAL ENGINEER

SCALE

DATE:	MAY 2016
DESIGN BY	P.C.
DRAWN BY	P.C.
CHKD. BY	C.S.
APPD. BY	J.M.
JOB NO.	201370

PROJECT NAME

EL PASO INTERNATIONAL AIRPORT
CHECKED BAGGAGE INSPECTION SYSTEM

6701 CONVAIR ROAD EL PASO, TEXAS

EL PASO INTERNATIONAL AIRPORT

CITY OF EL PASO

SHEET TITLE

PROPOSED MCP PLAN – PDP 4

B7.14

FILE NO. 238512

SHEET OF

FOR BIDDING & PERMITTING ONLY, NOT FOR CONSTRUCTION PURPOSES.

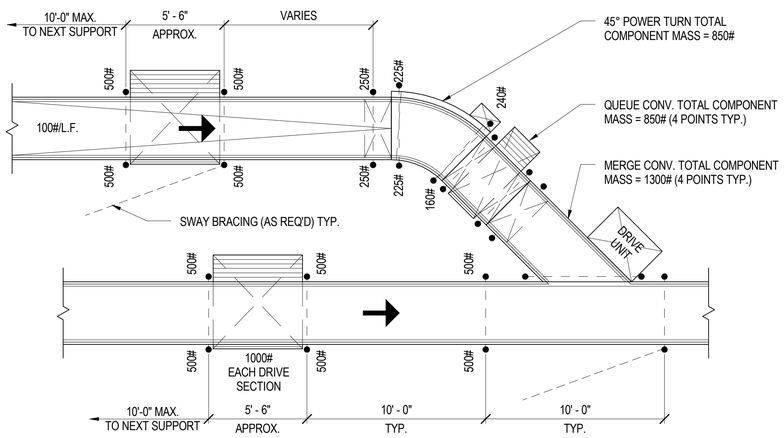

1 SUPPORT LOAD FOR CONVEYOR MERGE
1/4" = 1'-0"

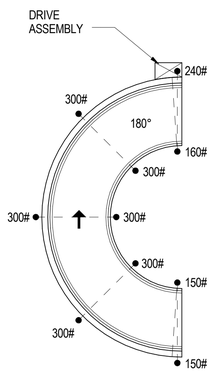

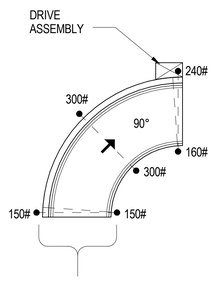

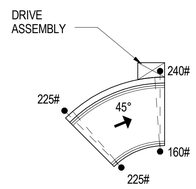

TYPICAL EQUIP. SUPPORT ASSEMBLY
CONSISTS OF TWO (2) VERT. RODS W/
POINT LOADS OF VARIABLE MASS AND
ONE (1) HORIZONTAL SILL ANGLE

COMPONENT MASS - TOTAL
45° POWER TURN = 950 LBS.
90° POWER TURN = 1400 LBS.
180° POWER TURN = 2600 LBS.

2 POWER TURNS STANDARD SUPPORT
1/4" = 1'-0"

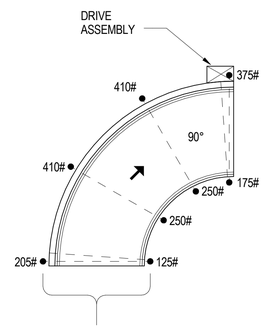

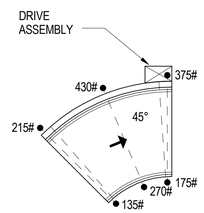

TYPICAL EQUIP. SUPPORT ASSEMBLY
CONSISTS OF TWO (2) VERT. RODS W/
POINT LOADS OF VARIABLE MASS AND
ONE (1) HORIZONTAL SILL ANGLE

NOTE:
WHERE MULTIPLE POWER TURN SEGMENTS ARE REQUIRED TO BE INSTALLED BUTTED TOGETHER, PROVIDE THEM ON A COMMON (SINGLE) SUPPORT FRAME ASSEMBLY TO SIMPLIFY THE OVERALL INSTALLATION. MODIFY THE MATING ENDS OF EACH POWER TURN, AS NECESSARY AND PER THE SUPPLIER'S RECOMMENDATIONS, SO THAT THE COMPLETE ASSEMBLY BETWEEN EACH SEGMENT CLOSELY FITS TOGETHER TO MINIMIZE THE TRANSFER GAPS AT THE JUNCTION POINTS, WHICH SHALL NOT EXCEED 1" (MAX.) BETWEEN THE BELT FACE(S).

3 ODDSIZE POWER TURNS STANDARD SUPPORT
1/4" = 1'-0"

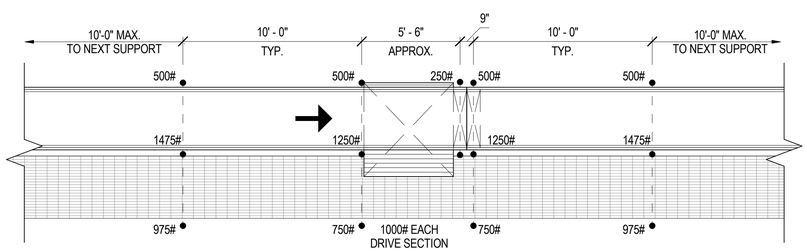

4 SINGLE LEVEL CONVEYOR WITH PLATFORM SUPPORTS
1/4" = 1'-0"

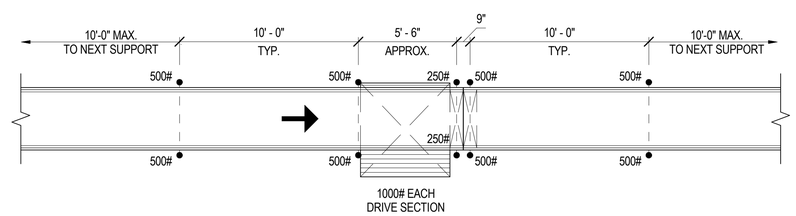

5 SINGLE LEVEL CONVEYOR SUPPORT
1/4" = 1'-0"

BAGGAGE CONVEYOR LOADS:

1. THE CONVEYOR ATTACHMENT METHODS REPRESENTED ON THESE DRAWINGS ARE FOR REFERENCE ONLY. THE BAGGAGE HANDLING SYSTEM CONTRACTOR IS REQUIRED TO SUBMIT CONVEYOR ATTACHMENT DETAILS INCLUDING LOADING CALCULATIONS BY A REGISTERED P.E. TO THE OWNER FOR REVIEW AND APPROVAL PRIOR TO COMMENCEMENT OF INSTALLATION.
2. ALL STRUCTURAL DESIGNS AND ATTACHMENTS SHALL COMPLY WITH ALL STATE, LOCAL AND NATIONAL GOVERNING CODES AND REGULATIONS. ALL CONVEYOR EQUIPMENT SHALL BE CAPABLE OF SUPPORTING A SINGLE CONCENTRATED LOAD OF 250 LBS.
3. THE CONTRACTOR SHALL INCLUDE AND IDENTIFY THE QUANTITY OF VIBRATION ISOLATORS AS PART OF THE SHOP DRAWING SUBMITTAL PROCESS. THE CONTRACTOR SHALL IDENTIFY A UNIT COST AS PART OF THE BASE BID TO ADD INDIVIDUAL VIBRATION ISOLATORS TO SELECTED CONVEYORS DURING THE ENGINEERING PHASE. THE LIVE LOAD TO BE UTILIZED FOR SIZING DRIVES, BELTS, BEARINGS, ETC., SHALL BE 60 LBS/LIN. FT. FOR LOAD-ACCUMULATING CONVEYORS AND RUN-OUT CONVEYORS, 40 LBS/LIN FT. AT A CONVEYOR SPEED OF 90 FPM ADJUSTED PROPORTIONAL TO SPEED OF ALL OTHER CONVEYORS AS SUMMARIZED IN THE BHS SPECIFICATIONS.

BHS SUPPORT ATTACHMENT:

1. WHEN CONNECTING TO BUILDING STEEL USE BEAM CLAMPS SIZED FOR THE BOTTOM FLANGE OF THE BEAM. USE A (MIN.) 3/4" DIA. THREADED ROD FOR HANGING SUPPORT.
2. WHEN CONNECTING TO THE CONCRETE STRUCTURE USE EITHER A HILTI "KWIK BOLT" OR RAWLING "RAWL-STUD" IN SHEAR FOLLOWS:

   1000 LBS LOAD USE MIN. 3/8" DIA. WITH 2-1/2" EMBEDMENT (MIN)
   1500 LBS LOAD USE MIN. 1/2" DIA. WITH 3-1/2" EMBEDMENT (MIN)
   2000 LBS LOAD USE MIN. 5/8" DIA. WITH 4" EMBEDMENT (MIN)
   MIN. SPACING 4" WITH 8" EDGE DISTANCE.

MAINTENANCE PLATFORM NOTES:

1. THE MAINTENANCE PLATFORMS AND WALKWAYS THAT ARE SHOWN ON THESE DRAWINGS ARE INTENDED AS TYPICAL SCHEMATIC EXAMPLES OF WHERE PLATFORMS AND WALKWAYS ARE TO BE PROVIDED AND THE APPROXIMATE CONFIGURATION.
2. PROVIDE AND INSTALL MAINTENANCE PLATFORMS FOR MAINTENANCE PERSONNEL ACCESS TO THE ENTIRE BAGGAGE HANDLING SYSTEM AT ALL MAINTENANCE POINTS AND POTENTIAL BAGGAGE JAM LOCATIONS. PROVIDE AND INSTALL LADDERS TO ALLOW ACCESS TO ALL PLATFORMS.
3. SYSTEM MAINTENANCE POINTS INCLUDE BUT ARE NOT LIMITED TO:
   a) ALL MOTOR/DRIVE LOCATIONS
   b) ALL RETURN ROLLER LOCATIONS
4. POTENTIAL BAGGAGE JAM LOCATIONS INCLUDE BUT ARE NOT LIMITED TO:
   a) ALL ENTRANCE AND EXIT POINTS ON POWER TURNS
   b) ALL SEPARATIONS BETWEEN CONVEYORS (HEAD AND TAIL ENDS)
5. REFER TO SPECIFICATION FOR MAINTENANCE PLATFORMS AND WALKWAYS REQUIREMENTS AND CRITERIA.

BAGGAGE CONVEYOR LOADS:

1. DURING THE DETAIL DESIGN PERIOD, THE FOLLOWING LOADS WERE SUPPLIED TO THE STRUCTURAL ENGINEER FOR USE IN DETERMINING THE LOADS GENERATED BY THE CONVEYOR EQUIPMENT (STATIC AND DYNAMIC LOADS COMBINED). DURING THE BIDDING PERIOD, PROVIDE AND CLEARLY IDENTIFY ANY CONVEYOR EQUIPMENT LOADING REQUIREMENTS MORE STRINGENT THAN WHAT IS SHOWN IN THESE DOCUMENTS THAT MAY BE ESSENTIAL FOR EQUIPMENT CONNECTIONS TO THE BUILDING STRUCTURE.

STANDARD CONV. BED SECTION	100 LBS/LIN. FT.
OS CONV. BED SECTION AND MERGES	150 LBS/LIN. FT.
CONV. DRIVE	1,000 LBS EA.
MINI CONV. DRIVE	850 LBS EA.
POWER TURN 45°	850 LBS EA.
POWER TURN 90°	1,300 LBS EA.
PLATFORM	65 LBS/SQ. FT.
MAKE-UP DEVICE	200 LBS/LIN. FT.

1. THE CONVEYOR SUPPORT POINT LOADING PLACEMENT AND CONFIGURATION SHOWN IS REPRESENTATIVE OF ONE POSSIBLE CONFIGURATION. THIS DIAGRAMMATIC VIEW IS PROVIDED FOR USE BY THE STRUCTURAL ENGINEER IN DETERMINING ALL LOADS IMPOSED BY THE NEW BAGGAGE EQUIPMENT AND ASSOCIATED SERVICES. OTHER CONFIGURATIONS MAY BE PROVIDED.
2. PROVISION OF THE BAGGAGE EQUIPMENT CONTRACTOR SHALL PROVIDE SPECIFIC DETAIL SUPPORT DESIGN FOR ALL BUILDING STRUCTURE CONNECTIONS AND ALL VERTICAL SUPPORT MEMBER CONNECTIONS TO FLOOR SLAB AND BUILDING STRUCTURE.
3. THE FINAL STRUCTURAL SUPPORT DESIGN SOLUTION IS THE RESPONSIBILITY OF THE BAGGAGE EQUIPMENT CONTRACTOR AND SHALL BE COORDINATED WITH AND APPROVED BY THE BHS CONTRACTOR'S PROFESSIONAL PROJECT ENGINEER.
4. THE BAGGAGE EQUIPMENT SUPPLIER IS RESPONSIBLE FOR THE DESIGN AND STRUCTURAL INTEGRITY OF ALL BOLTS, HANGERS, SUPPORT MEMBERS, ETC., AND IS TO PROVIDE ALL NECESSARY MATERIALS REQUIRED FOR INSTALLATION.

SYMBOL	DESCRIPTION
● — — — ●	CEILING-SUPPORTED CONVEYOR SILL ASSEMBLY (TYP. +7'-6" AND ABOVE)
●———●	FLOOR-SUPPORTED CONVEYOR PEDESTAL ASSEMBLY (TYP. +7'-6" AND BELOW)
●	CONCENTRATED POINT LOAD (AT SUPPORT LOCATIONS)

REFERENCES – BENCHMARK

DATE	REVISIONS	BY

CONSULTANT'S NAME

mijares ● mora
A R C H I T E C T S I N C.
111 N. FESTIVAL
EL PASO, TEXAS 79912
TEL: 915-542-1989
FAX: 915-542-1994

ARCHITECT'S SEAL

STATE OF TEXAS
ASHER N. DAVID
119923
MAY 31, 2016
LICENSED
PROFESSIONAL ENGINEER

SCALE

DATE	MAY 2016
DESIGN BY	P.C.
DRAWN BY	P.C.
CHKD. BY	C.S.
APPD. BY	J.M.
JOB NO.	201370

PROJECT NAME

EL PASO INTERNATIONAL AIRPORT
CHECKED BAGGAGE INSPECTION SYSTEM

6701 CONVAIR ROAD — EL PASO, TEXAS

EL PASO INTERNATIONAL AIRPORT

CITY OF EL PASO

SHEET TITLE
LOADING DETAILS

B8.00
FILE NO. 238512
SHEET OF

FOR BIDDING & PERMITTING ONLY, NOT FOR CONSTRUCTION PURPOSES.

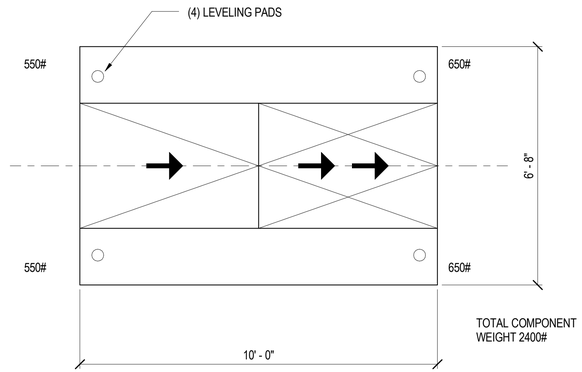

1 VERTICAL SORTATION DEVICE POINT LOADS
1/2" = 1'-0"

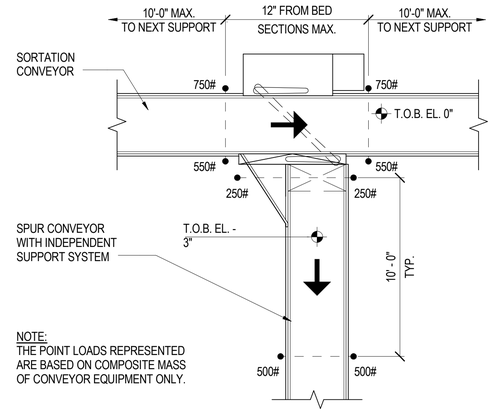

2 HSPD WITH 90 DEGREE TAKE AWAY CONVEYOR
1/4" = 1'-0"

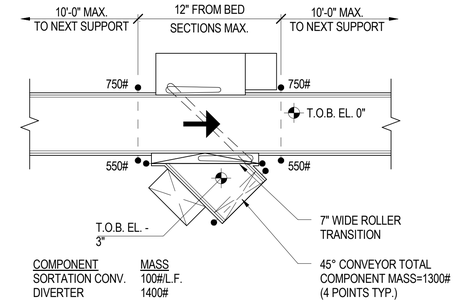

3 HSPD WITH 45 DEGREE TAKE AWAY CONVEYOR
1/4" = 1'-0"

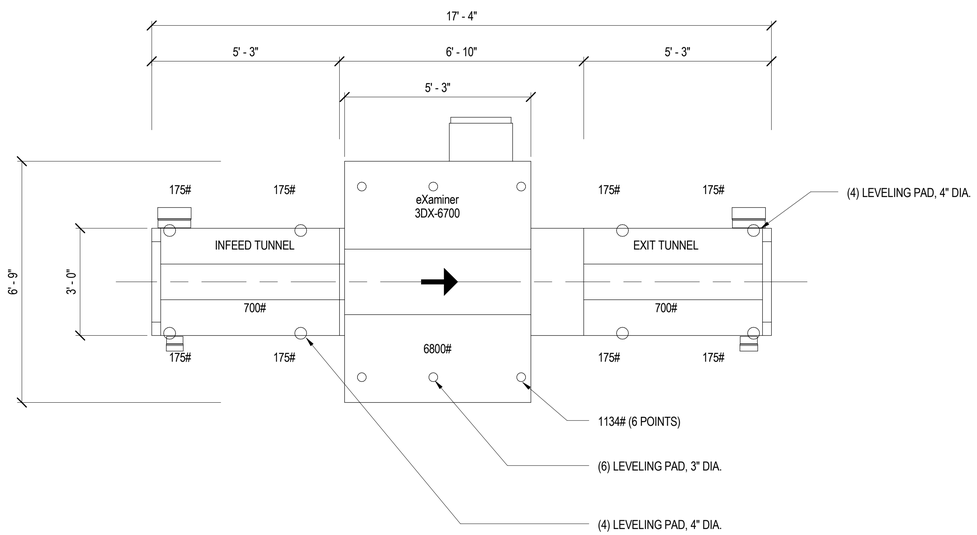

4 L3 EXAMINER EDS POINT LOADS
1/2" = 1'-0"

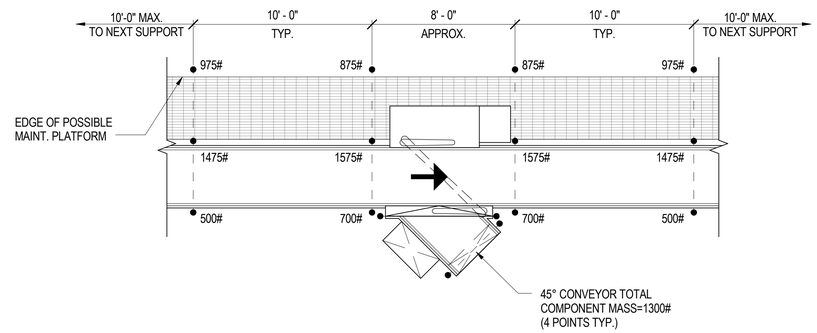

5 45 DEGREE HSPD WITH CATWALK
1/4" = 1'-0"

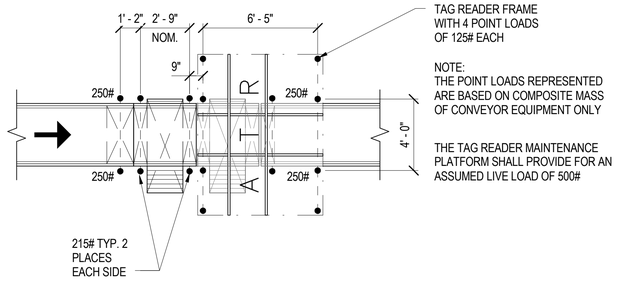

6 ATR STANDARD SUPPORT LOADS
1/4" = 1'-0"

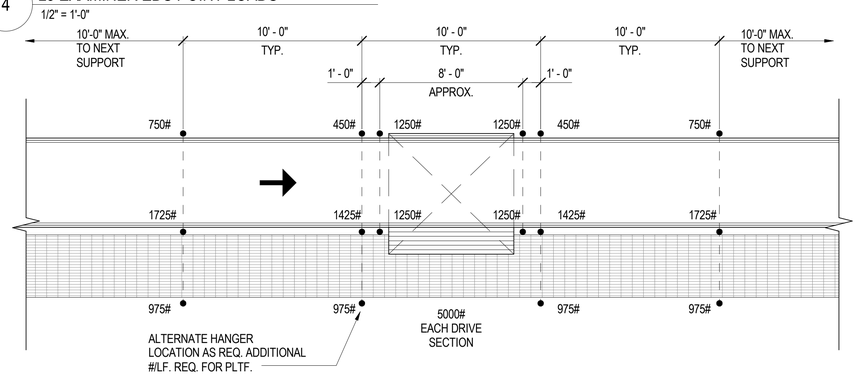

7 OVERSIZE CONVEYOR WITH CATWALK
1/4" = 1'-0"

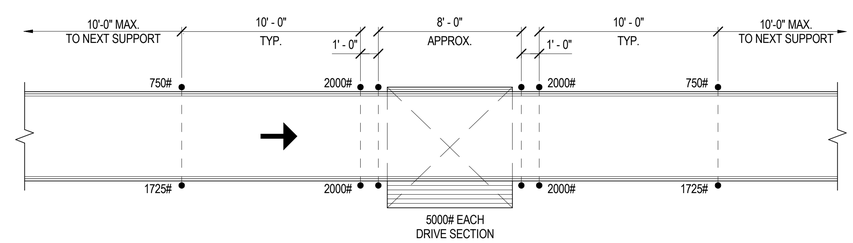

8 ODDSIZE SINGLE LEVEL CONVEYOR SUPPORT
1/4" = 1'-0"

REFERENCES - BENCHMARK

DATE	REVISIONS	BY

CONSULTANT'S NAME

mijares ● mora
ARCHITECTS INC.
111 N. FESTIVAL
EL PASO, TEXAS 79912
TELEPHONE: 915-542-1989
FAX: 915-542-1994

ARCHITECT'S SEAL

STATE OF TEXAS
ASHER N. DAVID
119923
MAY 31, 2016
LICENSED
PROFESSIONAL ENGINEER

SCALE

DATE	MAY 2016
DESIGN BY	P.C.
DRAWN BY	P.C.
CHKD. BY	C.S.
APPD. BY	J.M.
JOB NO.	201370

PROJECT NAME

EL PASO INTERNATIONAL AIRPORT
CHECKED BAGGAGE INSPECTION SYSTEM
6701 CONVAIR ROAD
EL PASO, TEXAS

EL PASO INTERNATIONAL AIRPORT

CITY OF EL PASO

SHEET TITLE
LOADING DETAILS

B8.01
FILE NO. 238512
SHEET OF

FOR BIDDING & PERMITTING ONLY, NOT FOR CONSTRUCTION PURPOSES.

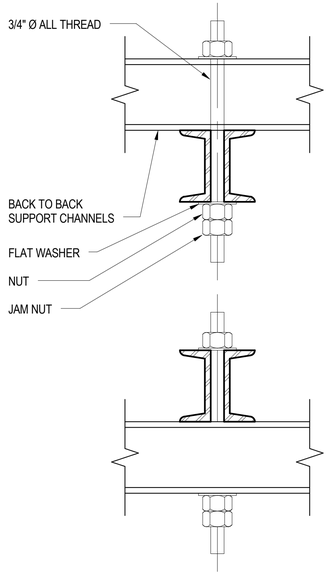

1 ALTERNATE BACK TO BACK HEADER ATTACHMENT
3" = 1'-0"

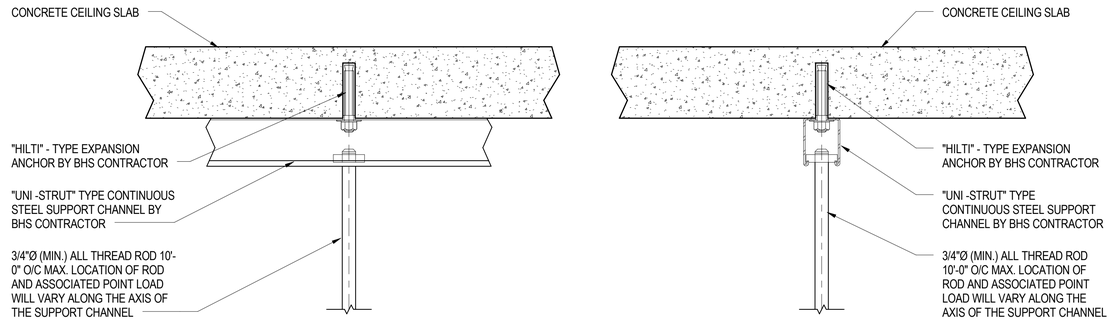

2 BHS SUPPLEMENTARY HEADER STEEL ATTACHMENT DETAIL - CONCRETE SLAB A
3" = 1'-0"

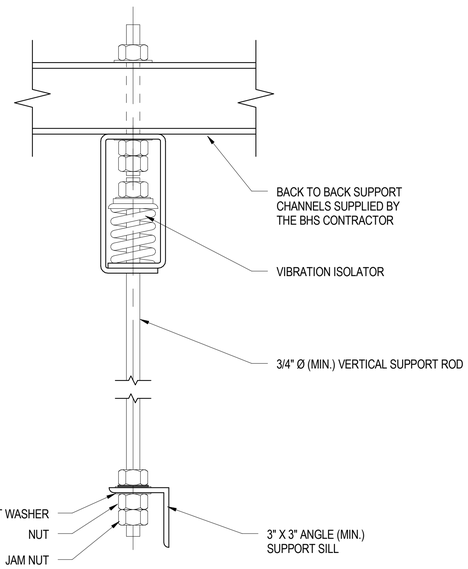

3 HANGER APPLICATION AT BACK TO BACK CHANNEL HEADERS
3" = 1'-0"

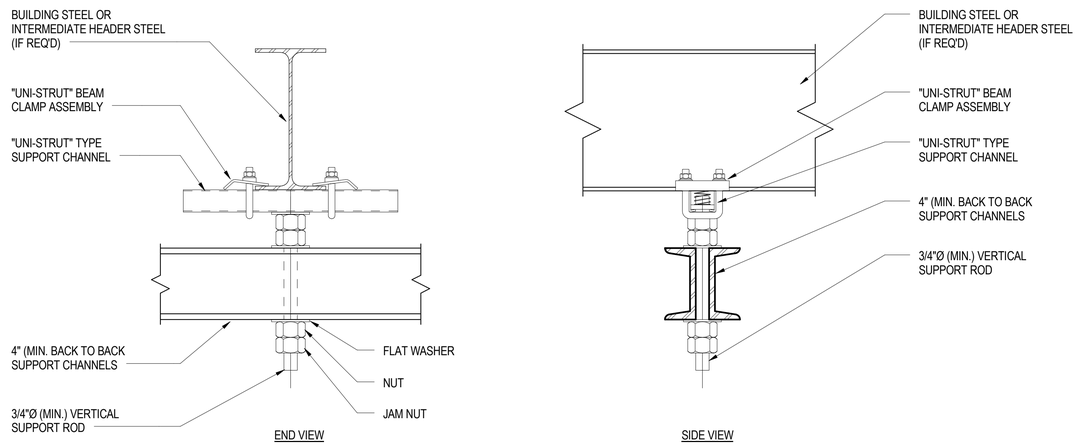

4 200-214 BHS SUPPLEMENTARY HEADER STEEL ATTACHMENT DETAIL - BEAM CLAMP B
3" = 1'-0"

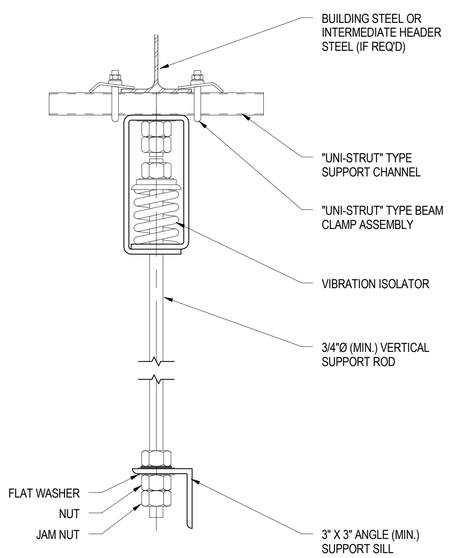

5 HANGER APPLICATION AT BUILDING STEEL
3" = 1'-0"

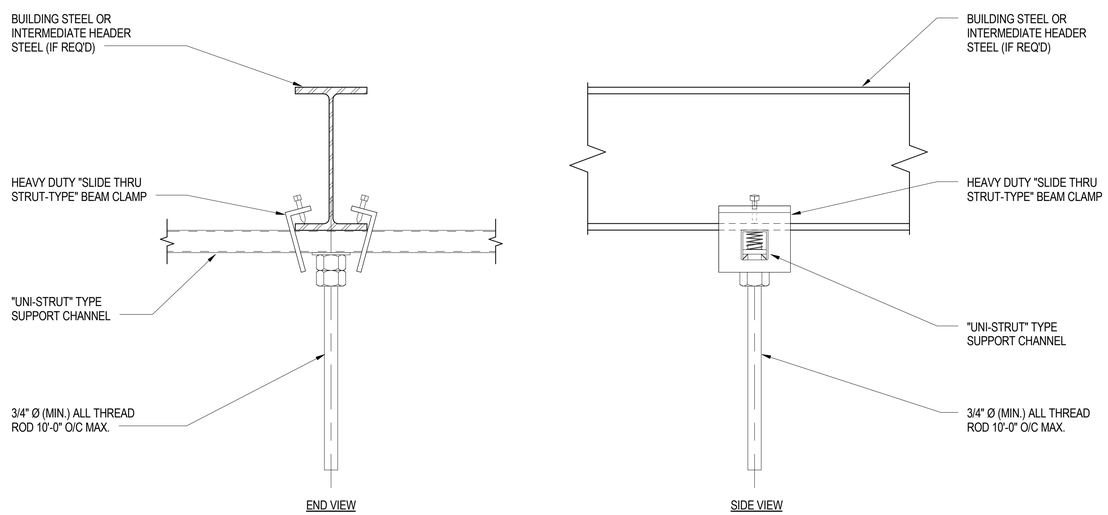

6 BHS SUPPLEMENTARY HEADER STEEL ATTACHMENT DETAIL - BEAM CLAMP A
3" = 1'-0"

REFERENCES – BENCHMARK

DATE	REVISIONS	BY

CONSULTANT'S NAME

mijares ● mora
ARCHITECTS INC.
111 N. FESTIVAL
EL PASO, TEXAS 79912
TEL: 915-542-1593
FAX: 915-542-1594

ARCHITECT'S SEAL

STATE OF TEXAS
ASHER N. DAVID
119923
MAY 31, 2016
LICENSED
PROFESSIONAL ENGINEER

SCALE

DATE	MAY 2016
DESIGN BY	P.C.
DRAWN BY	P.C.
CHKD. BY	C.S.
APPD. BY	J.M.
JOB NO.	201370

PROJECT NAME

EL PASO INTERNATIONAL AIRPORT
CHECKED BAGGAGE INSPECTION
SYSTEM

6701 CONVAIR ROAD EL PASO, TEXAS

EL PASO INTERNATIONAL AIRPORT

CITY OF EL PASO

SHEET TITLE

ATTACHMENT DETAILS

B8.02

FILE NO. 238512

SHEET OF

FOR BIDDING & PERMITTING ONLY, NOT FOR CONSTRUCTION PURPOSES.

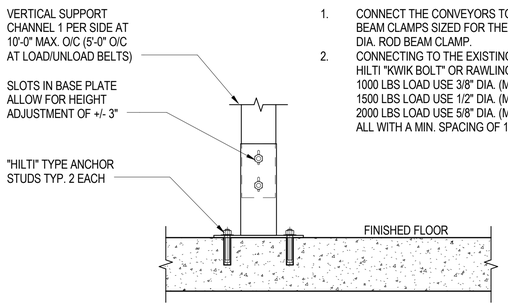

1. CONNECT THE CONVEYORS TO NEW STEEL FRAME AREAS BY MEANS OF BEAM CLAMPS SIZED FOR THE BOTTOM FLANGE OF THE BEAM USE A 5/8" DIA. ROD BEAM CLAMP.
2. CONNECTING TO THE EXISTING CONCRETE STRUCTURE USING EITHER A HILTI "KWIK BOLT" OR RAWLING "RAWL-STUD" AS FOLLOWS:
   1000 LBS LOAD USE 3/8" DIA. (MIN.) WITH 2 1/2"(MIN.) EMBEDMENT
   1500 LBS LOAD USE 1/2" DIA. (MIN.) WITH 3 1/2"(MIN.) EMBEDMENT
   2000 LBS LOAD USE 5/8" DIA. (MIN.) WITH 4" (MIN.)EMBEDMENT
   ALL WITH A MIN. SPACING OF 12"

1 FLOOR SUPPORTED CONVEYOR LEG ATTACHMENT
1 1/2" = 1'-0"

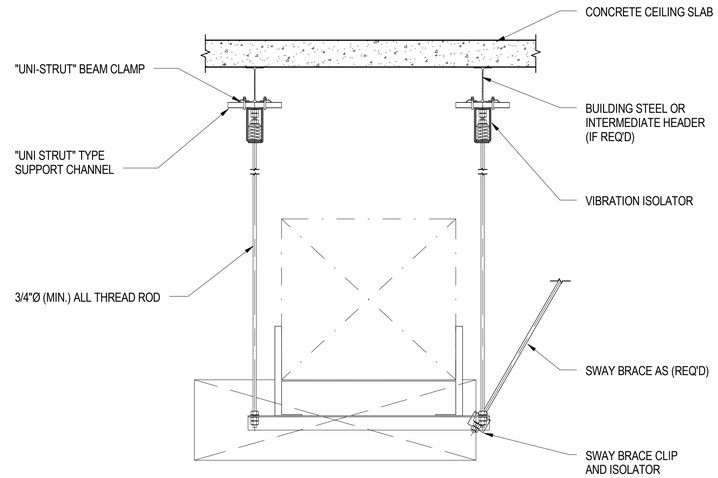

2 CONVEYOR SUPPORT USING 'UNI-STRUT' BEAM CLAMPS AND VIBRATION ISOLATORS
3/4" = 1'-0"

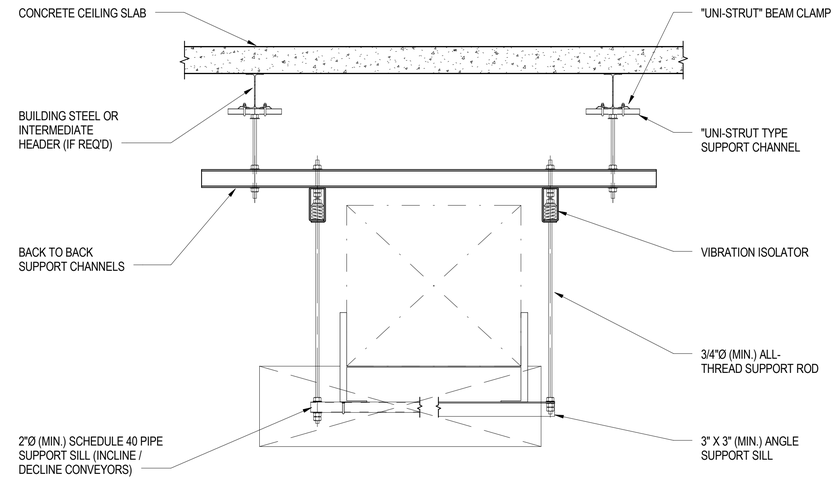

3 HEADER ATTACHMENT LAYOUT WITH AND WITHOUT SWAY BRACING
3/4" = 1'-0"

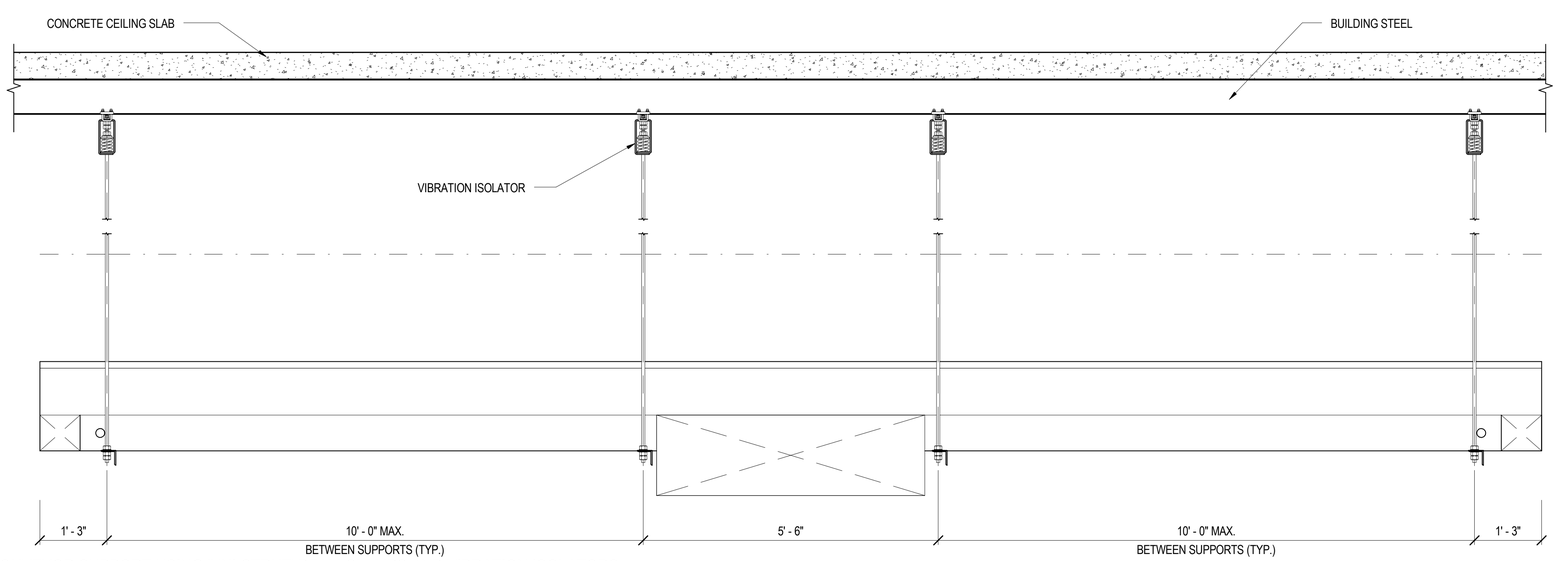

4 CONVEYOR SUPPORT USING 'UNI-STRUT' BEAM CLAMPS AND VIBRATION ISOLATORS - ELEVATION
3/4" = 1'-0"

REFERENCES – BENCHMARK

DATE	REVISIONS	BY

CONSULTANT'S NAME

mijares ● mora
ARCHITECTS INC.
111 N. FESTIVAL
EL PASO, TEXAS 79912
TEL: 915-542-1594
FAX: 915-542-1594

ARCHITECT'S SEAL

STATE OF TEXAS
ASHER N. DAVID
119923
MAY 31, 2016
LICENSED
PROFESSIONAL ENGINEER

SCALE

DATE	MAY 2016
DESIGN BY	P.C.
DRAWN BY	P.C.
CHKD. BY	C.S.
APPD. BY	J.M.
JOB NO.	201370

PROJECT NAME

EL PASO INTERNATIONAL AIRPORT
CHECKED BAGGAGE INSPECTION SYSTEM

6701 CONVAIR ROAD — EL PASO, TEXAS

EL PASO INTERNATIONAL AIRPORT

CITY OF EL PASO

SHEET TITLE
SUPPORT DETAILS

B8.03
FILE NO. 238512
SHEET OF

FOR BIDDING & PERMITTING ONLY, NOT FOR CONSTRUCTION PURPOSES.

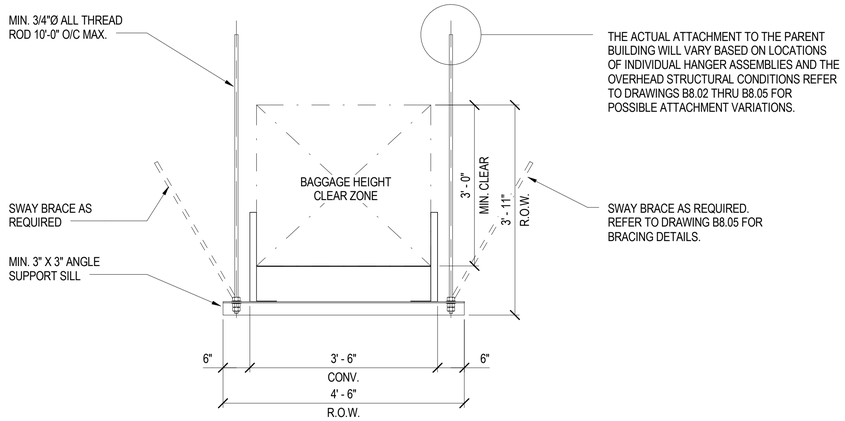

1 STANDARD CONVEYOR HANGER DETAIL1
3/4" = 1'-0"

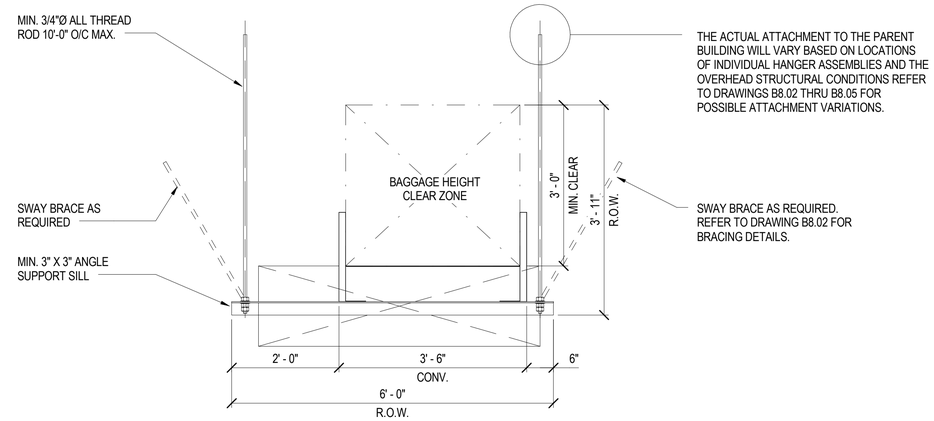

2 300-304 STANDARD CONVEYOR - DRIVE HANGER1
3/4" = 1'-0"

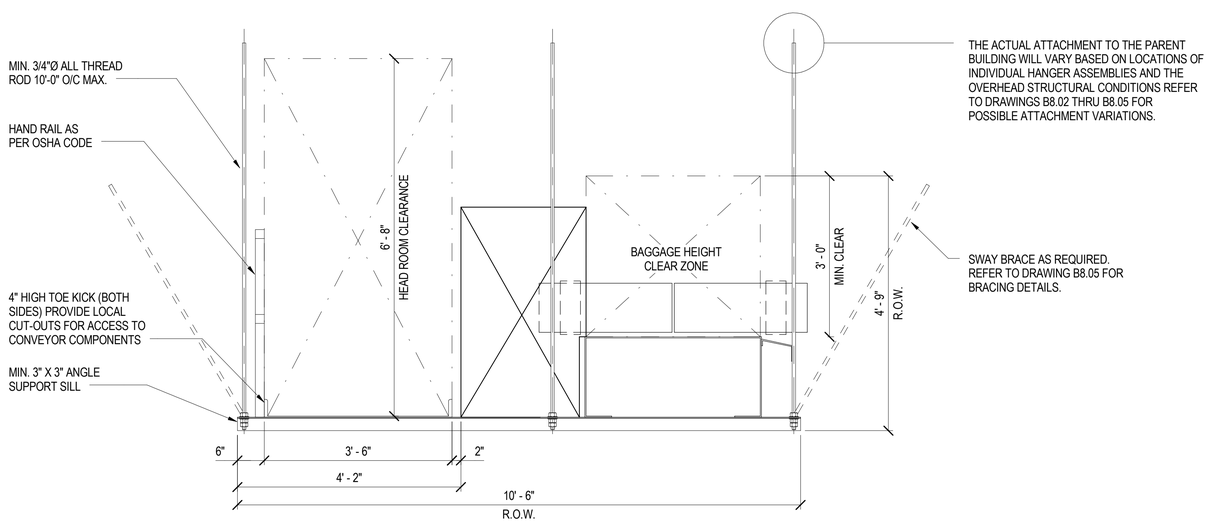

3 STANDARD CONVEYOR AND HSPD HANGER1
3/4" = 1'-0"

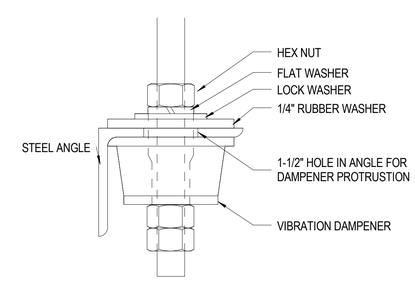

4 VIBRATION DAMPENER
6" = 1'-0"

REFERENCES – BENCHMARK

DATE	REVISIONS	BY

CONSULTANT'S NAME

mijares ● mora
ARCHITECTS INC.
111 N. FESTIVAL
EL PASO, TEXAS 79912
TEL: 915-542-1989
FAX: 915-542-1994

ARCHITECT'S SEAL

STATE OF TEXAS
ASHER N. DAVID
119923
MAY 31, 2016
LICENSED
PROFESSIONAL ENGINEER

SCALE

DATE	MAY 2016
DESIGN BY	P.C.
DRAWN BY	P.C.
CHKD. BY	C.S.
APPD. BY	J.M.
JOB NO.	201370

PROJECT NAME

EL PASO INTERNATIONAL AIRPORT
CHECKED BAGGAGE INSPECTION SYSTEM
6701 CONVAIR ROAD
EL PASO, TEXAS

EL PASO INTERNATIONAL AIRPORT

CITY OF EL PASO

SHEET TITLE
SUPPORT DETAILS

B8.04
FILE NO. 238512
SHEET OF

FOR BIDDING & PERMITTING ONLY, NOT FOR CONSTRUCTION PURPOSES.

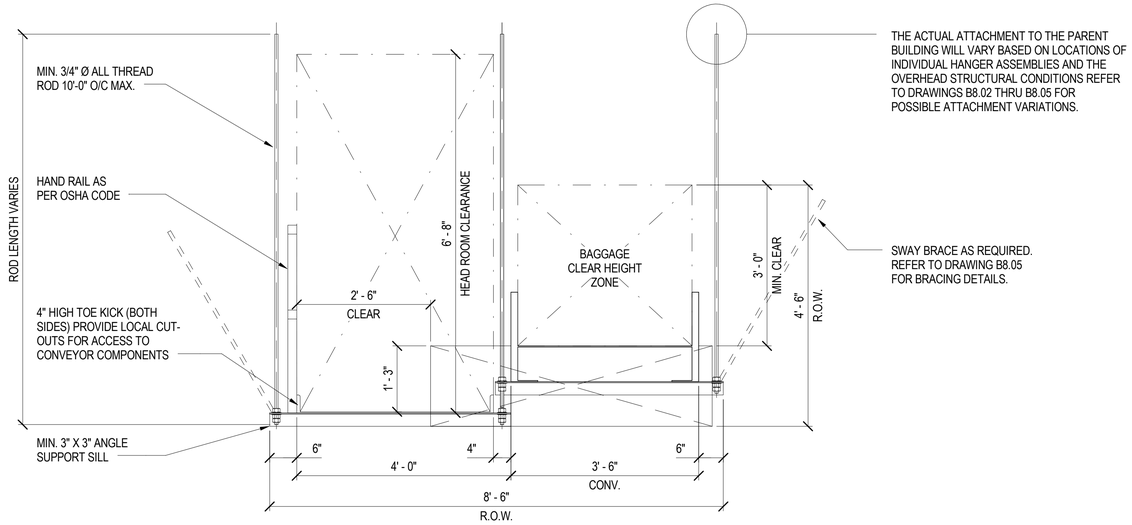

1 CONVEYOR AND CATWALK HANGER DOUBLE SILL SUPPORT
3/4" = 1'-0"

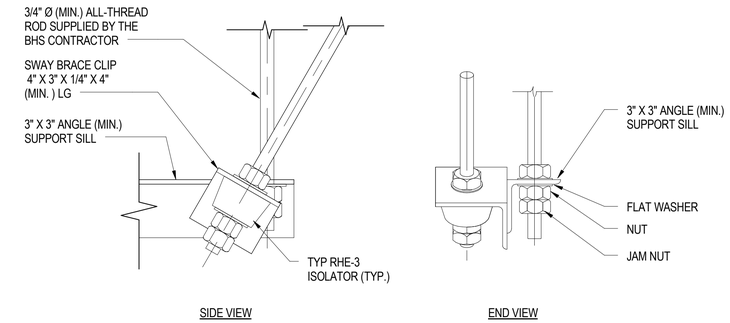

2 SWAY BRACE FOR ANGLE SUPPORT SILL
3" = 1'-0"

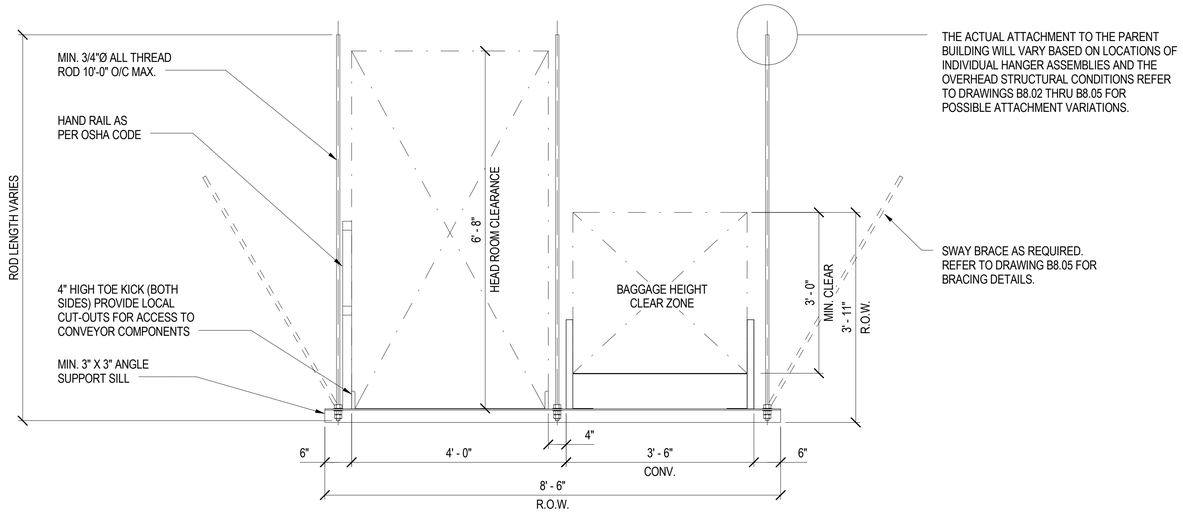

3 CONVEYOR AND CATWALK HANGER SINGLE SILL SUPPORT DETAIL
3/4" = 1'-0"

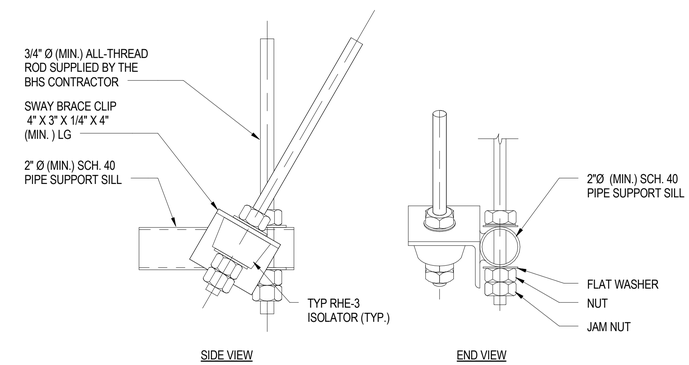

4 SWAY BRACE FOR PIPE SUPPORT
3" = 1'-0"

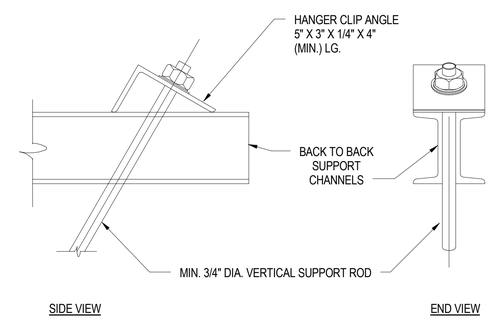

5 SWAY BRACE FOR BACK TO BACK SUPPORT CHANNEL HEADER
3" = 1'-0"

REFERENCES – BENCHMARK

DATE	REVISIONS	BY

CONSULTANT'S NAME

mijares ● mora
ARCHITECTS INC.
111 N. FESTIVAL
EL PASO, TEXAS 79912
TEL: 915-542-1989
FAX: 915-542-1994

ARCHITECT'S SEAL

STATE OF TEXAS
ASHER N. DAVID
119923
MAY 31, 2016
LICENSED
PROFESSIONAL ENGINEER

SCALE

DATE	MAY 2016
DESIGN BY	P.C.
DRAWN BY	P.C.
CHKD. BY	C.S.
APPD. BY	J.M.
JOB NO.	201370

PROJECT NAME

EL PASO INTERNATIONAL AIRPORT
CHECKED BAGGAGE INSPECTION SYSTEM

6701 CONVAIR ROAD — EL PASO, TEXAS

EL PASO INTERNATIONAL AIRPORT

CITY OF EL PASO

SHEET TITLE
SUPPORT DETAILS

B8.05
FILE NO. 238512
SHEET OF

FOR BIDDING & PERMITTING ONLY, NOT FOR CONSTRUCTION PURPOSES.

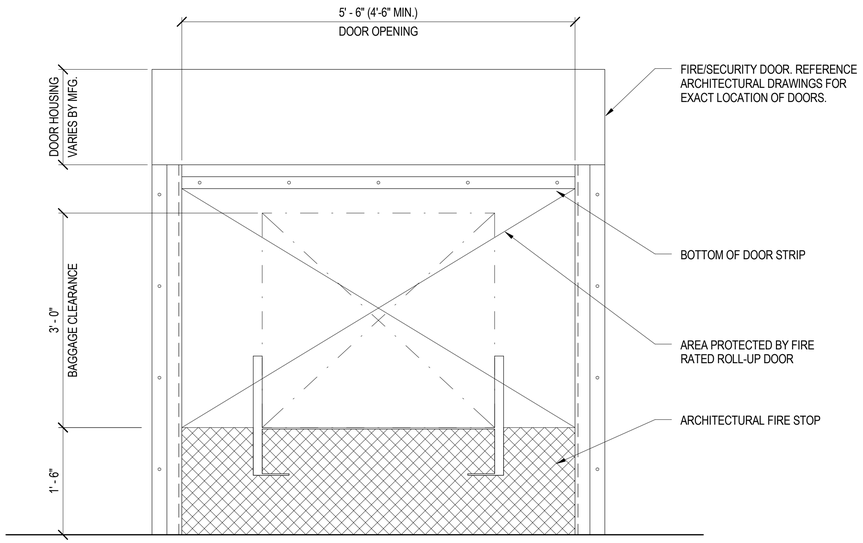

1 DOOR OPENING AND FIRE DOOR WITH FIRE STOPPING1
1" = 1'-0"

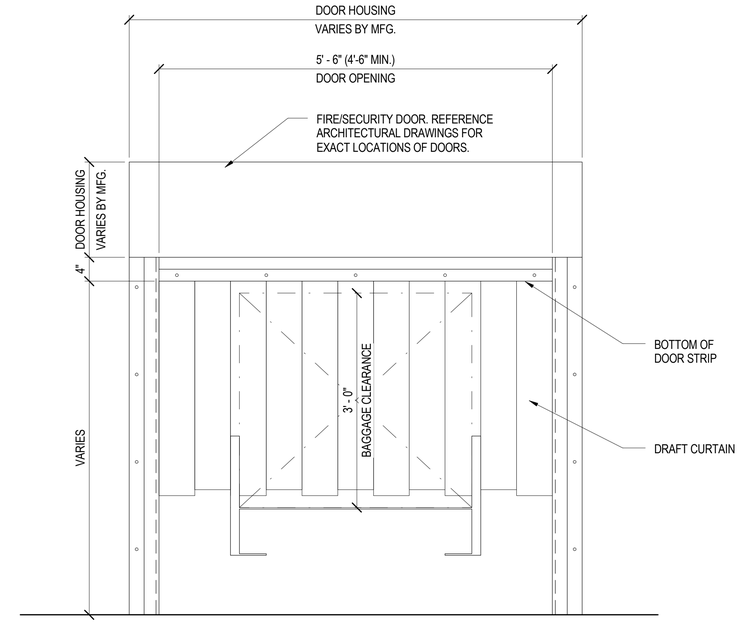

2 DOOR OPENING AT FIRE SECURITY DOOR1
1" = 1'-0"

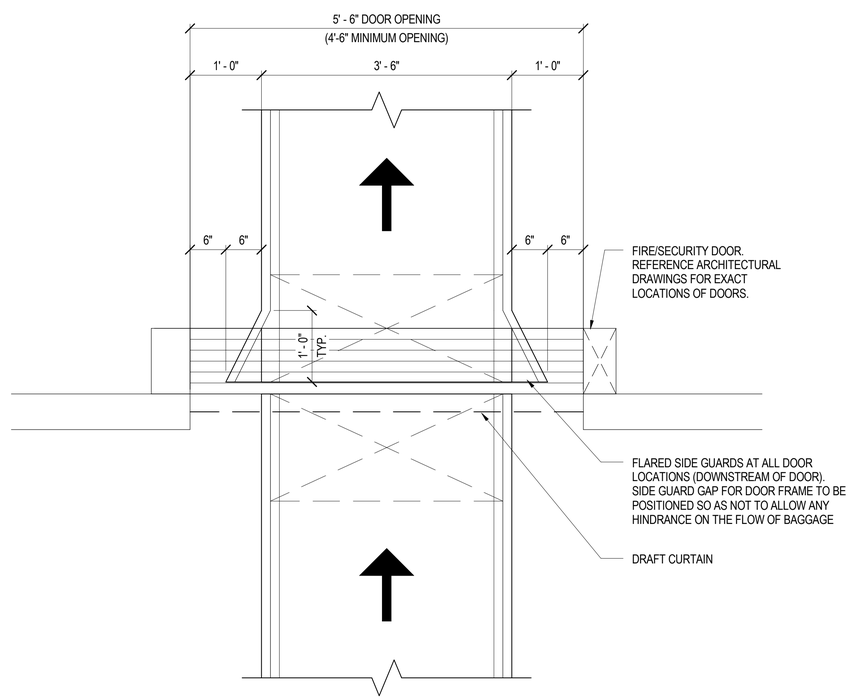

3 FLARED SIDEGUARD FOR CONVEYOR GAP AT FIRE DOOR1
1" = 1'-0"

REFERENCES – BENCHMARK

DATE	REVISIONS	BY

CONSULTANT'S NAME

mijares ● mora
ARCHITECTS INC.
111 N. FESTIVAL
EL PASO, TEXAS 79912
TELEPHONE: 915-542-1989
FAX: 915-542-1594

ARCHITECT'S SEAL

STATE OF TEXAS
ASHER N. DAVID
119923
MAY 31, 2016
LICENSED
PROFESSIONAL ENGINEER

SCALE

DATE	MAY 2016
DESIGN BY	P.C.
DRAWN BY	P.C.
CHKD. BY	C.S.
APPD. BY	J.M.
JOB NO.	201370

PROJECT NAME

EL PASO INTERNATIONAL AIRPORT
CHECKED BAGGAGE INSPECTION SYSTEM

6701 CONVAIR ROAD — EL PASO, TEXAS

EL PASO INTERNATIONAL AIRPORT

CITY OF EL PASO

SHEET TITLE

FIRE/SECURITY DOOR DETAILS

B8.06

FILE NO. 238512

SHEET OF

FOR BIDDING & PERMITTING ONLY, NOT FOR CONSTRUCTION PURPOSES.

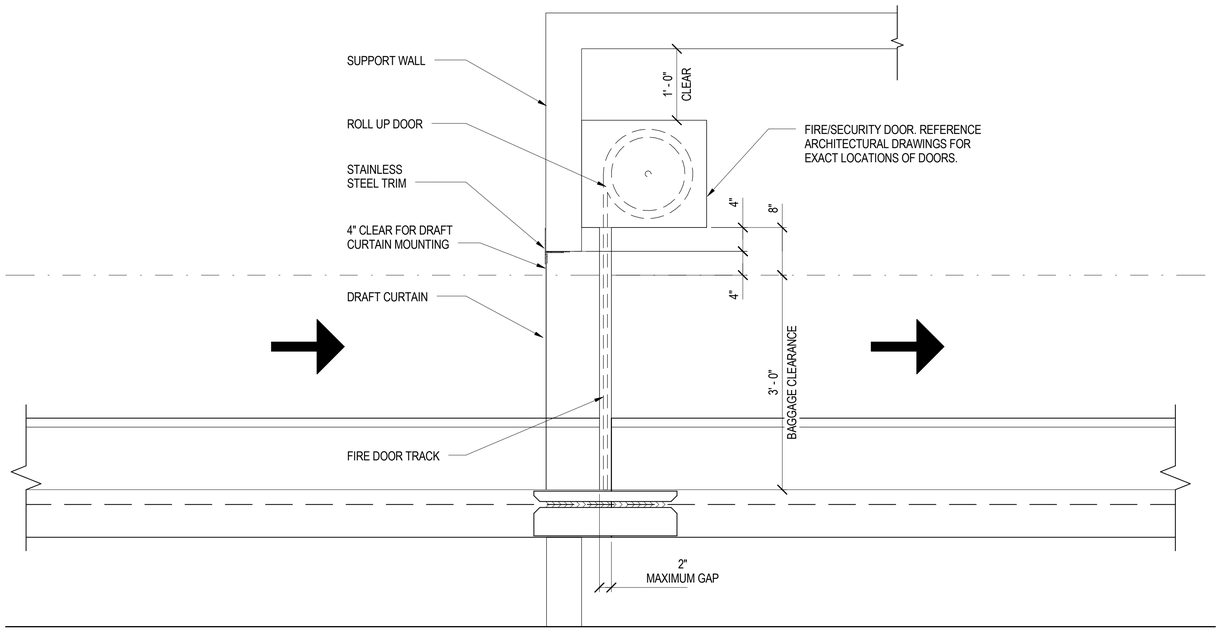

1 FIRE STOPPING FOR FIRE DOOR1
1" = 1'-0"

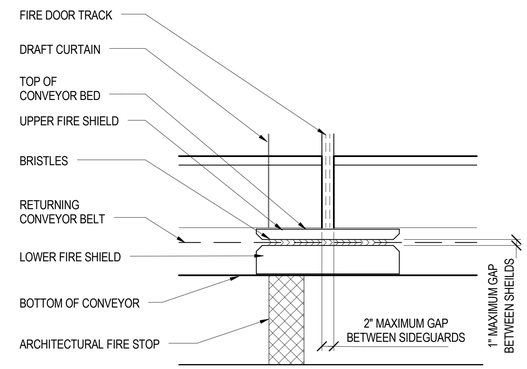

2 CONVEYOR SLIDER BED FIRE STOP SHIELDING1
1" = 1'-0"

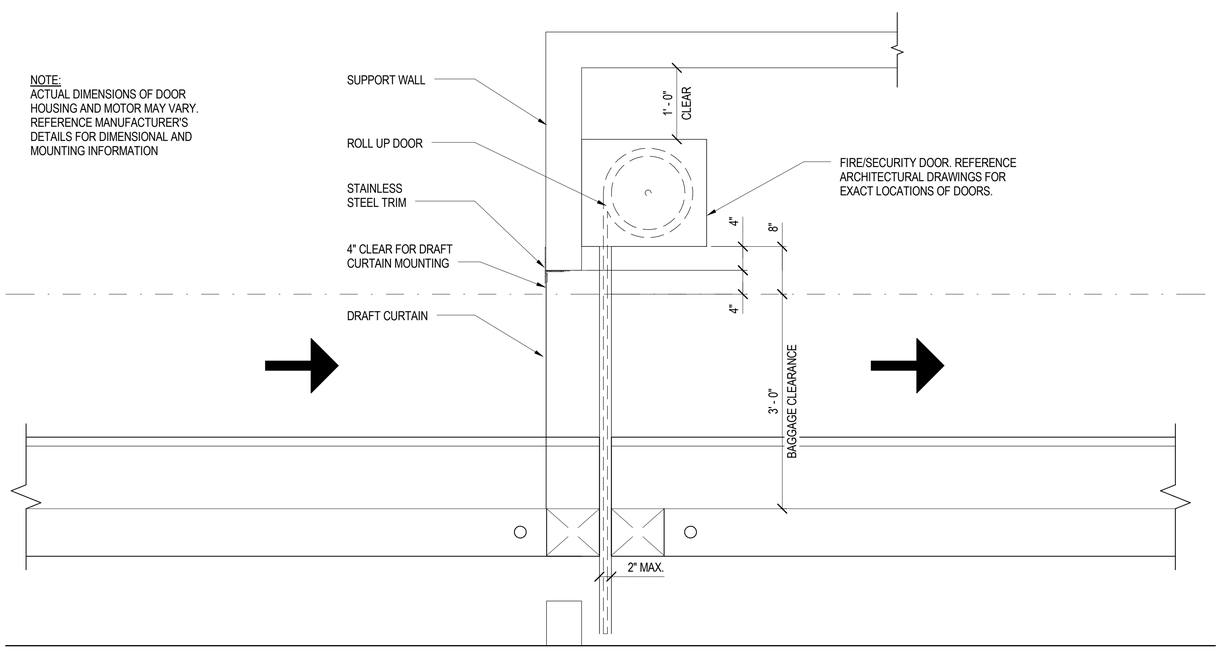

3 CONVEYOR GAP FOR FIRE-SECURITY DOOR1
1" = 1'-0"

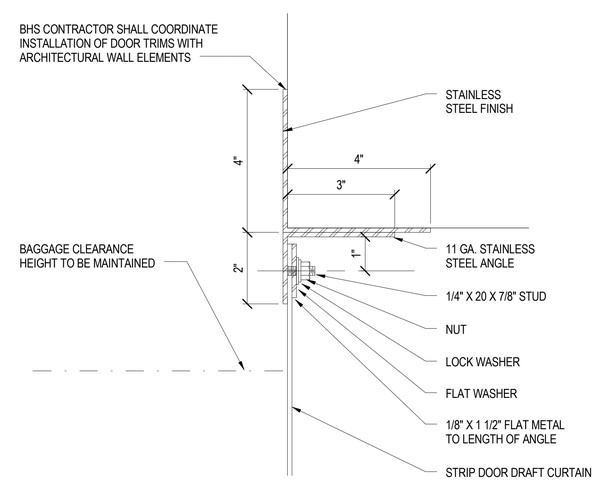

4 TYPICAL DRAFT CURTAIN MOUNTING1
6" = 1'-0"

REFERENCES – BENCHMARK

DATE	REVISIONS	BY

CONSULTANT'S NAME

mijares ● mora
ARCHITECTS INC.
111 N. FESTIVAL
EL PASO, TEXAS 79912
TELEPHONE: 915-542-1989
FAX: 915-542-1594

ARCHITECT'S SEAL

STATE OF TEXAS
ASHER N. DAVID
119923
MAY 31, 2016
LICENSED
PROFESSIONAL ENGINEER

SCALE

DATE	MAY 2016
DESIGN BY	P.C.
DRAWN BY	P.C.
CHKD. BY	C.S.
APPD. BY	J.M.
JOB NO.	201370

PROJECT NAME

EL PASO INTERNATIONAL AIRPORT
CHECKED BAGGAGE INSPECTION SYSTEM
6701 CONVAIR ROAD
EL PASO, TEXAS

EL PASO INTERNATIONAL AIRPORT

CITY OF EL PASO

SHEET TITLE
FIRE/SECURITY DOOR DETAILS

B8.07
FILE NO. 238512
SHEET OF

FOR BIDDING & PERMITTING ONLY, NOT FOR CONSTRUCTION PURPOSES.

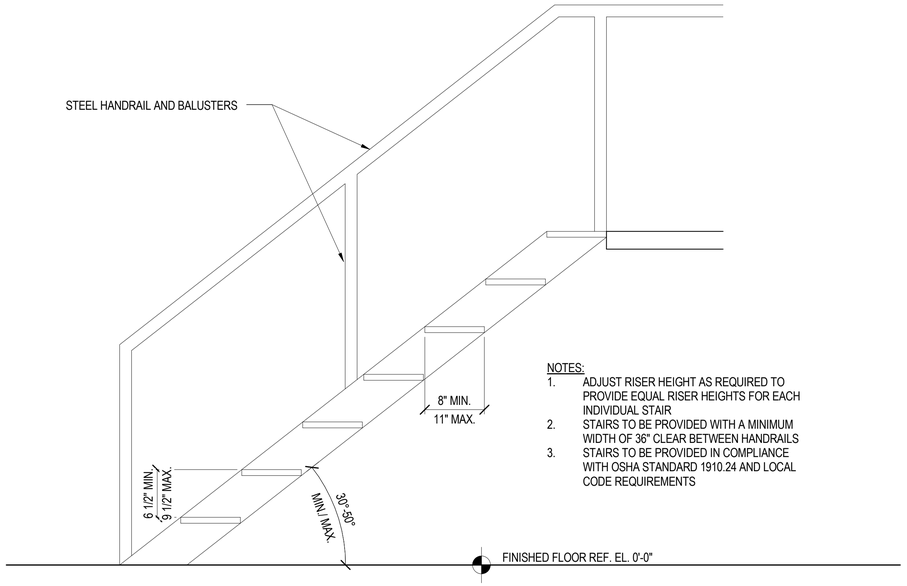

NOTES:
1. ADJUST RISER HEIGHT AS REQUIRED TO PROVIDE EQUAL RISER HEIGHTS FOR EACH INDIVIDUAL STAIR
2. STAIRS TO BE PROVIDED WITH A MINIMUM WIDTH OF 36" CLEAR BETWEEN HANDRAILS
3. STAIRS TO BE PROVIDED IN COMPLIANCE WITH OSHA STANDARD 1910.24 AND LOCAL CODE REQUIREMENTS

1 STANDARD STAIR DETAIL
1" = 1'-0"

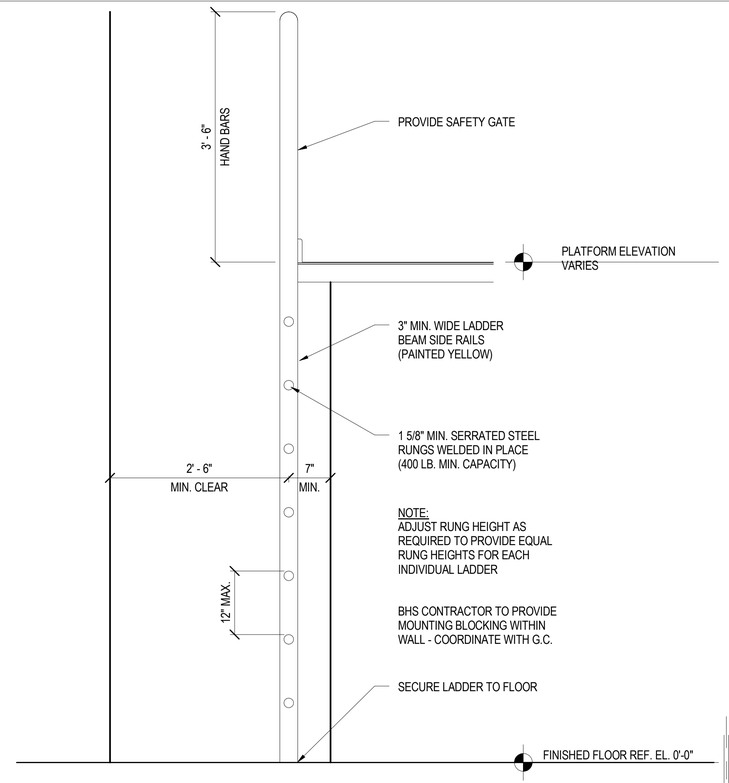

NOTE:
ADJUST RUNG HEIGHT AS REQUIRED TO PROVIDE EQUAL RUNG HEIGHTS FOR EACH INDIVIDUAL LADDER

BHS CONTRACTOR TO PROVIDE MOUNTING BLOCKING WITHIN WALL - COORDINATE WITH G.C.

2 VERTICAL LADDER FOR MAINTENANCE ACCESS
1" = 1'-0"

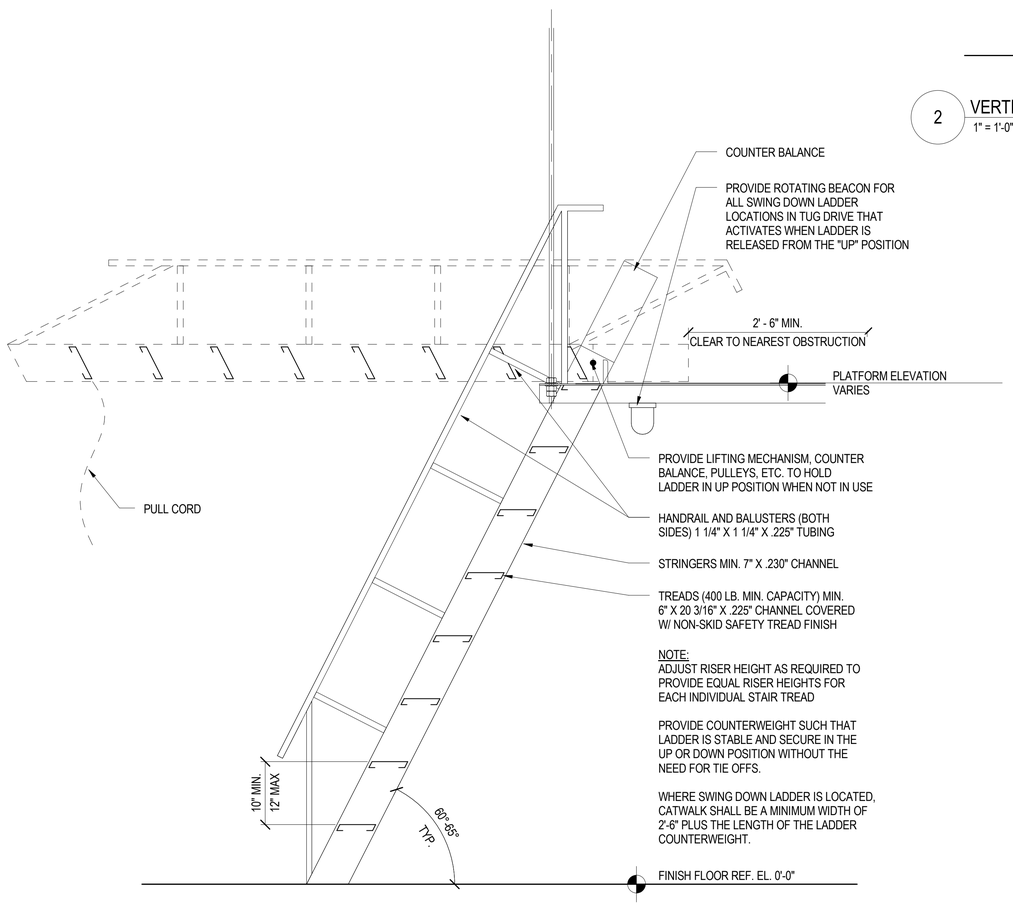

NOTE:
ADJUST RISER HEIGHT AS REQUIRED TO PROVIDE EQUAL RISER HEIGHTS FOR EACH INDIVIDUAL STAIR TREAD

PROVIDE COUNTERWEIGHT SUCH THAT LADDER IS STABLE AND SECURE IN THE UP OR DOWN POSITION WITHOUT THE NEED FOR TIE OFFS.

WHERE SWING DOWN LADDER IS LOCATED, CATWALK SHALL BE A MINIMUM WIDTH OF 2'-6" PLUS THE LENGTH OF THE LADDER COUNTERWEIGHT.

3 ALUMINUM SWING-DOWN LADDER WITH COUNTERWEIGHT
1" = 1'-0"

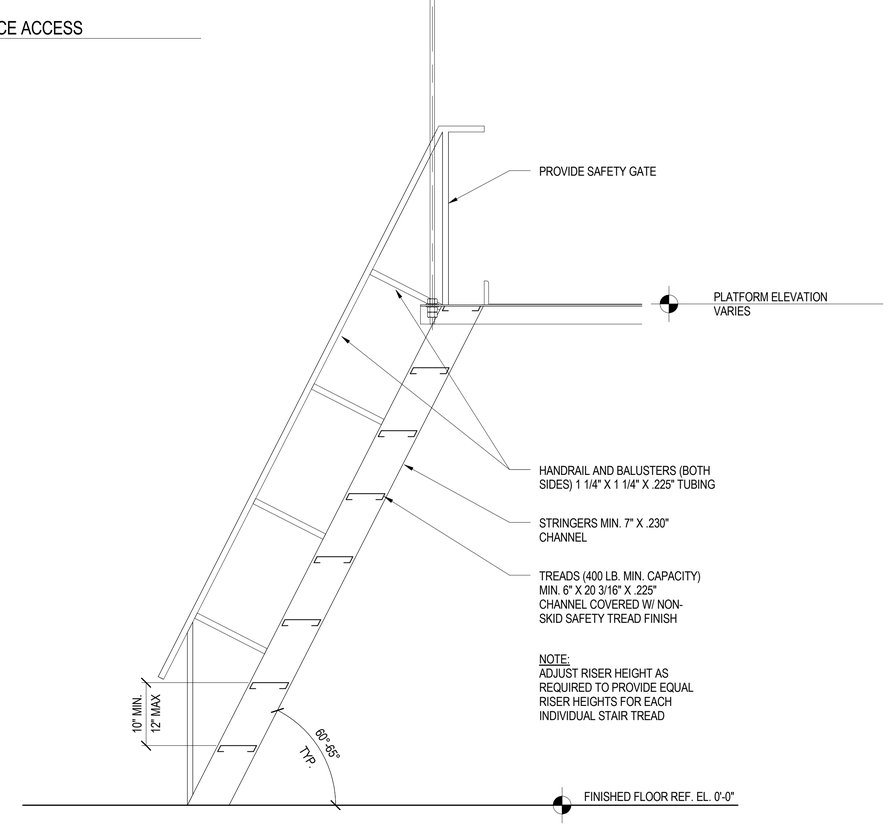

NOTE:
ADJUST RISER HEIGHT AS REQUIRED TO PROVIDE EQUAL RISER HEIGHTS FOR EACH INDIVIDUAL STAIR TREAD

4 SHIPS LADDER FOR MAINTENANCE ACCESS
1" = 1'-0"

REFERENCES – BENCHMARK

DATE	REVISIONS	BY

CONSULTANT'S NAME

mijares ● mora
ARCHITECTS INC.
111 N. FESTIVAL
EL PASO, TEXAS 79912
TEL: 915-542-1989
FAX: 915-542-1594

ARCHITECT'S SEAL

STATE OF TEXAS
ASHER N. DAVID
119923
MAY 31, 2016
LICENSED
PROFESSIONAL ENGINEER

SCALE

DATE	MAY 2016
DESIGN BY	P.C.
DRAWN BY	P.C.
CHKD. BY	C.S.
APPD. BY	J.M.
JOB NO.	201370

PROJECT NAME

EL PASO INTERNATIONAL AIRPORT
CHECKED BAGGAGE INSPECTION SYSTEM

6701 CONVAIR ROAD EL PASO, TEXAS

EL PASO INTERNATIONAL AIRPORT

CITY OF EL PASO

SHEET TITLE
LADDER DETAILS

B8.08
FILE NO. 238512
SHEET OF

FOR BIDDING & PERMITTING ONLY, NOT FOR CONSTRUCTION PURPOSES.

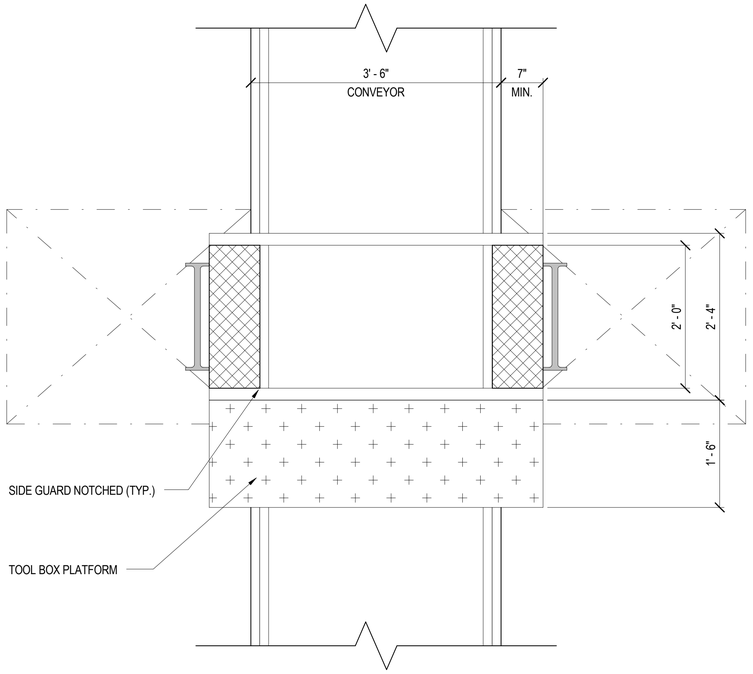

1 VERTICAL LADDER CROSSOVER FOR MAINTENANCE ACCESS PLAN VIEW
1" = 1'-0"

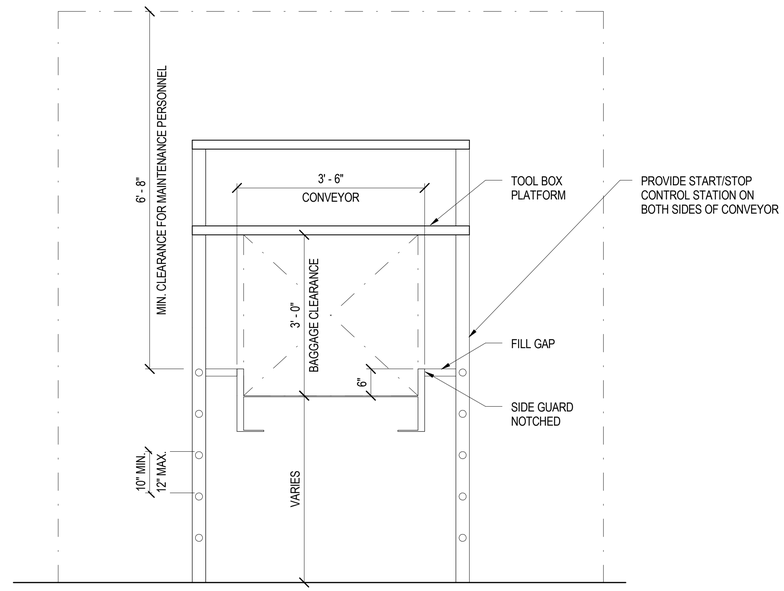

2 VERTICAL LADDER CROSSOVER FOR MAINTENANCE ACCESS ELEVATION
3/4" = 1'-0"

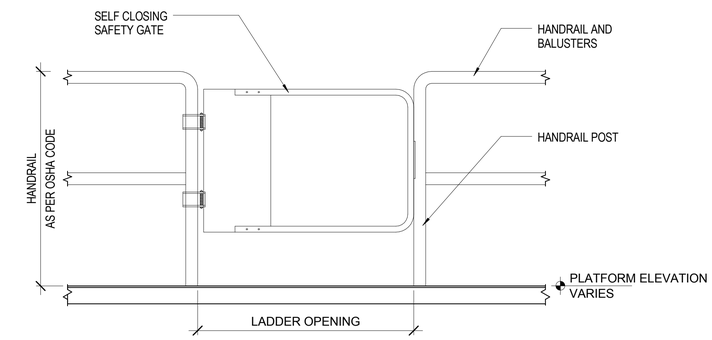

3 SAFETY GATE - ELEVATION
1" = 1'-0"

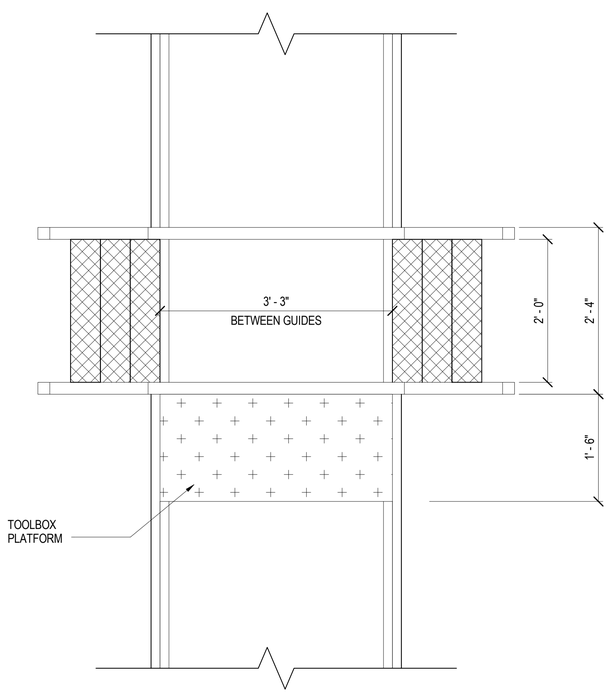

4 SWING OVER STYLE MAINTENANCE ACCESS STANDARD SINGLE CONVEYOR WIDTH1
1" = 1'-0"

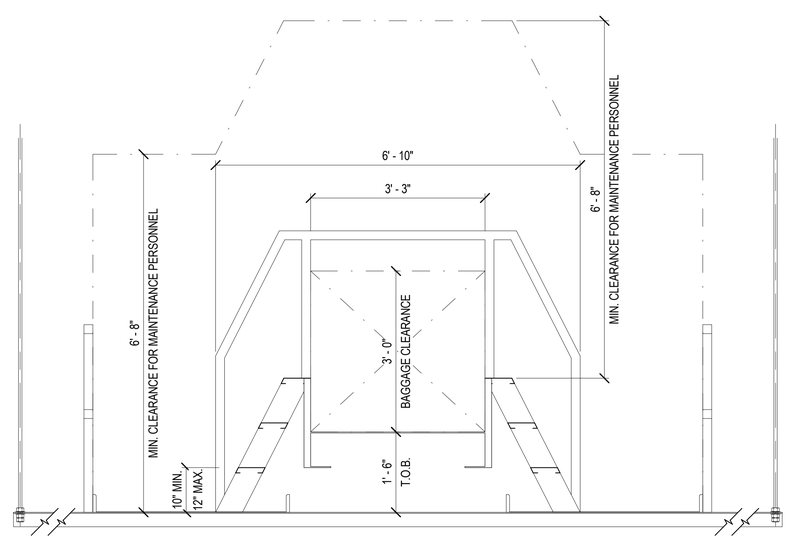

5 SWING OVER STYLE MAINTENANCE ACCESS STANDARD SINGLE CONVEYOR WIDTH - SECTION1
3/4" = 1'-0"

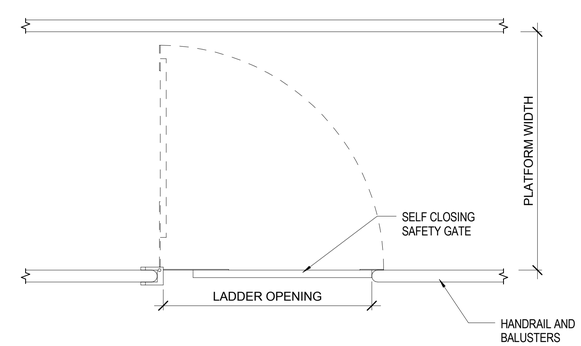

6 SAFETY GATE - PLAN
1" = 1'-0"

REFERENCES – BENCHMARK

DATE	REVISIONS	BY

CONSULTANT'S NAME

mijares ● mora
ARCHITECTS INC.
111 N. FESTIVAL
EL PASO, TEXAS 79912
TEL: 915-542-1989
FAX: 915-542-1594

ARCHITECT'S SEAL

STATE OF TEXAS
ASHER N. DAVID
119923
MAY 31, 2016
LICENSED
PROFESSIONAL ENGINEER

SCALE

DATE	MAY 2016
DESIGN BY	P.C.
DRAWN BY	P.C.
CHKD. BY	C.S.
APPD. BY	J.M.
JOB NO.	201370

PROJECT NAME

EL PASO INTERNATIONAL AIRPORT
CHECKED BAGGAGE INSPECTION SYSTEM

6701 CONVAIR ROAD EL PASO, TEXAS

EL PASO INTERNATIONAL AIRPORT

CITY OF EL PASO

SHEET TITLE

CROSS OVER AND SAFETY GATE DETAILS

B8.09

FILE NO. 238512

SHEET OF

FOR BIDDING & PERMITTING ONLY, NOT FOR CONSTRUCTION PURPOSES.

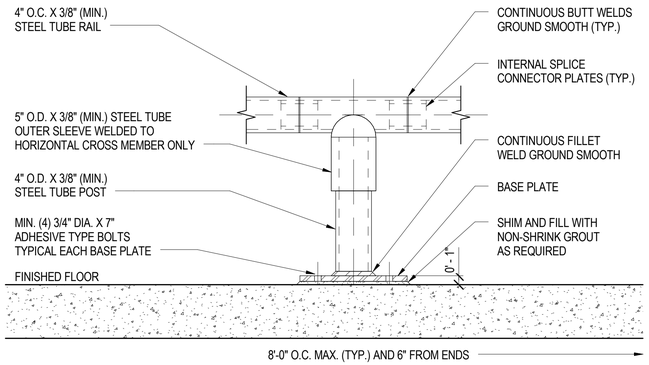

1 IMPACT PROTECTION AT FLOOR LEVEL
1 1/2" = 1'-0"

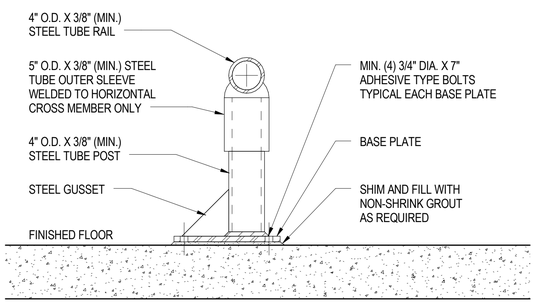

2 IMPACT PROTECTION AT FLOOR LEVEL CROSS SECTION1
1 1/2" = 1'-0"

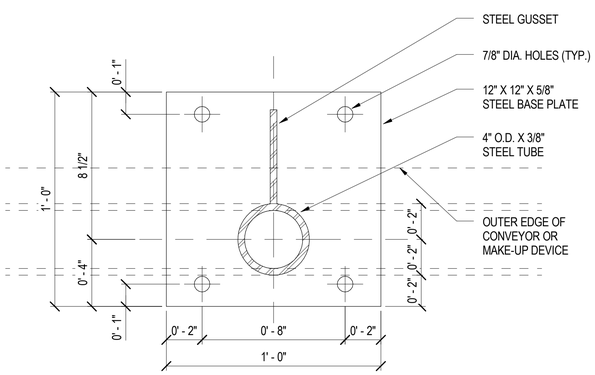

3 IMPACT PROTECTION BASE PLATE AND POST1
3" = 1'-0"

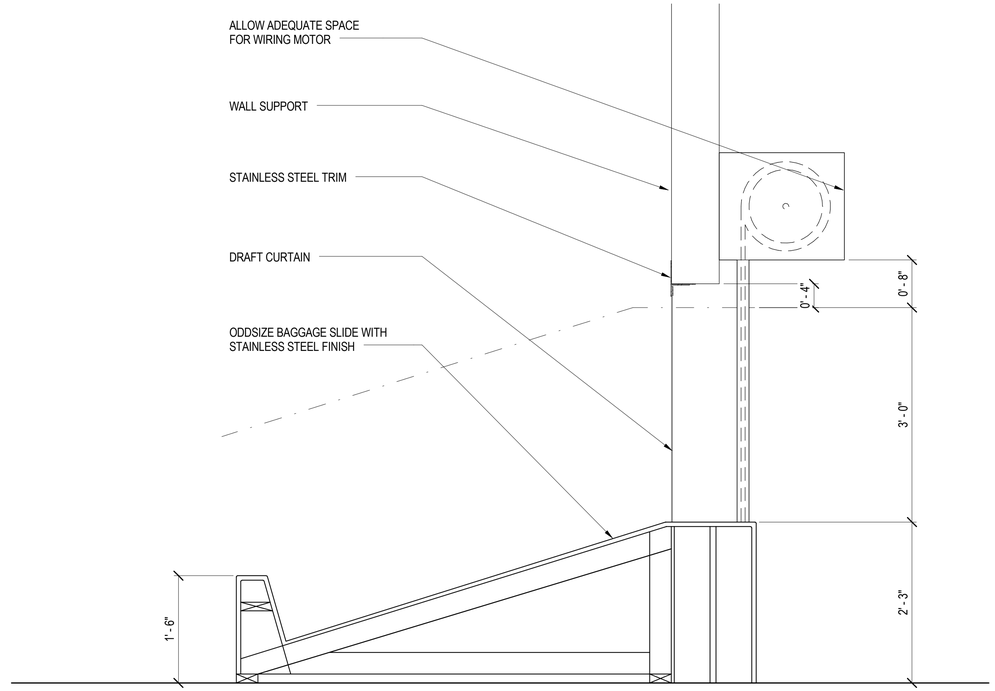

4 ODDSIZE OUTBOUND SLIDE WITH SECURITY DOOR - SECTION
1" = 1'-0"

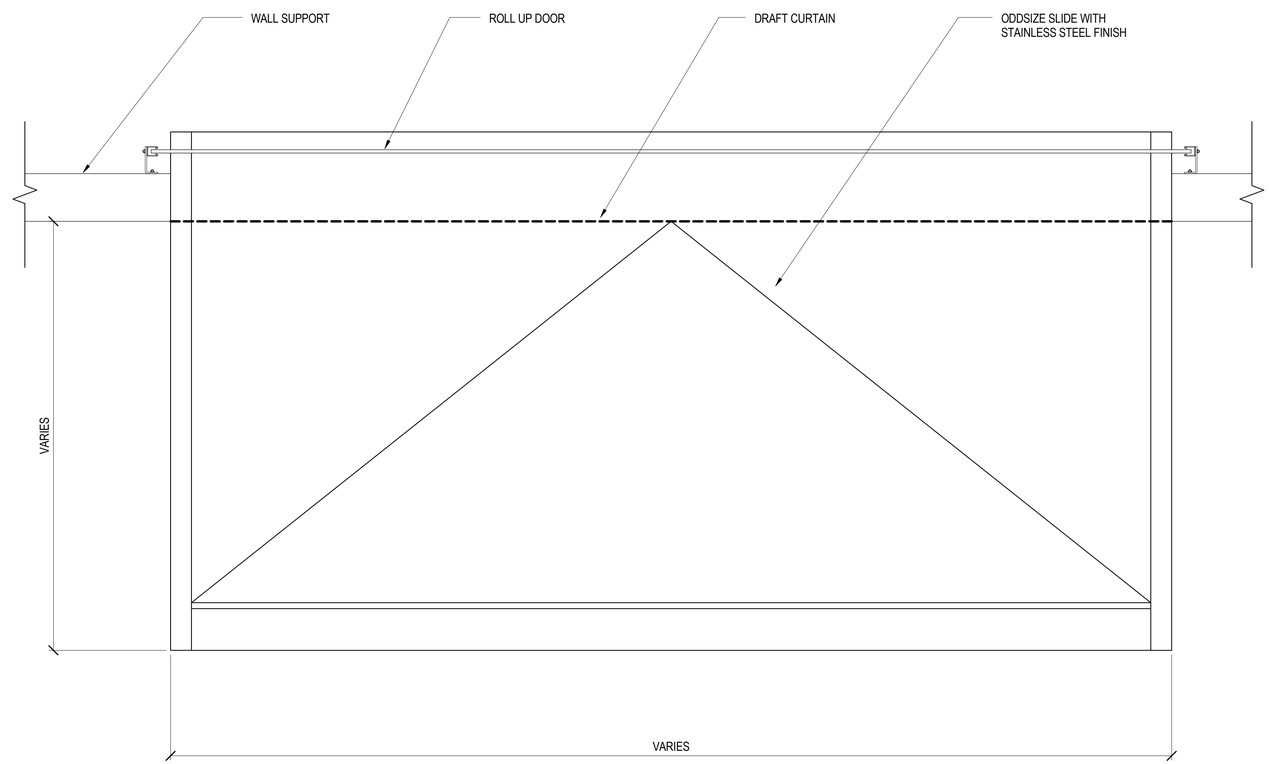

5 ODDSIZE OUTBOUND SLIDE WITH SECURITY DOOR AND DRAFT CURTAIN - PLAN
1" = 1'-0"

REFERENCES – BENCHMARK

DATE	REVISIONS	BY

CONSULTANT'S NAME

mijares ● mora
ARCHITECTS INC.
111 N. FESTIVAL
EL PASO, TEXAS 79912
TELEPHONE: 915-542-1989
FAX: 915-542-1594

ARCHITECT'S SEAL

STATE OF TEXAS
ASHER N. DAVID
119923
MAY 31, 2016
LICENSED
PROFESSIONAL ENGINEER

SCALE

DATE	MAY 2016
DESIGN BY	P.C.
DRAWN BY	P.C.
CHKD. BY	C.S.
APPD. BY	J.M.
JOB NO.	201370

PROJECT NAME

EL PASO INTERNATIONAL AIRPORT
CHECKED BAGGAGE INSPECTION
SYSTEM

6701 CONVAIR ROAD EL PASO, TEXAS

EL PASO INTERNATIONAL AIRPORT

CITY OF EL PASO

SHEET TITLE

IMPACT PROTECTION
& SLIDE DETAILS

B8.10

FILE NO. 238512

SHEET OF

FOR BIDDING & PERMITTING ONLY, NOT FOR CONSTRUCTION PURPOSES.

CAUTION

LOW HEADROOM

1 BHS OPERATIONAL WARNING SIGN #1
6" = 1'-0"

DO NOT OPERATE

CONVEYOR WITHOUT GUARDS IN PLACE

2 BHS OPERATIONAL WARNING SIGN #2
6" = 1'-0"

CAUTION

DO NOT

STAND, WALK ON OR CROSS CONVEYOR

3 BHS OPERATIONAL WARNING SIGN #3
6" = 1'-0"

CAUTION

THIS CONVEYOR IS

AUTOMATICALLY CONTROLLED AND MAY START AT ANY TIME

4 BHS OPERATIONAL WARNING SIGN #4
6" = 1'-0"

DANGER

EQUIPMENT MAY START AT ANY TIME

AUTHORIZED AND TRAINED PERSONNEL ONLY

5 BHS OPERATIONAL WARNING SIGN #5
6" = 1'-0"

EMERGENCY

STOP

6 BHS OPERATIONAL WARNING SIGN #6
6" = 1'-0"

DANGER

480 VOLTS

7 BHS OPERATIONAL WARNING SIGN #7
6" = 1'-0"

DANGER

PINCH POINT

8 BHS OPERATIONAL WARNING SIGN #8
6" = 1'-0"

DANGER

MOVING MACHINERY KEEP HANDS AND FEET CLEAR

9 BHS OPERATIONAL WARNING SIGN #9
6" = 1'-0"

REFERENCES – BENCHMARK

DATE	REVISIONS	BY

CONSULTANT'S NAME

mijares ● mora
ARCHITECTS INC.
111 N. FESTIVAL
EL PASO, TEXAS 79912
TELEPHONE: 915-542-1989
FAX: 915-542-1994

ARCHITECT'S SEAL

STATE OF TEXAS
ASHER N. DAVID
119023
MAY 31, 2016
LICENSED
PROFESSIONAL ENGINEER

SCALE

DATE	MAY 2016
DESIGN BY	P.C.
DRAWN BY	P.C.
CHKD. BY	C.S.
APPD. BY	J.M.
JOB NO.	201370

PROJECT NAME

EL PASO INTERNATIONAL AIRPORT
CHECKED BAGGAGE INSPECTION SYSTEM

6701 CONVAIR ROAD EL PASO, TEXAS

EL PASO INTERNATIONAL AIRPORT

CITY OF EL PASO

SHEET TITLE

SAFETY SIGNAGE

B8.11

FILE NO. 238512

SHEET OF

FOR BIDDING & PERMITTING ONLY, NOT FOR CONSTRUCTION PURPOSES.

DANGER

WATCH OUT
FOR MOVING
EQUIPMENT

1 BHS OPERATIONAL WARNING SIGN #10
6" = 1'-0"

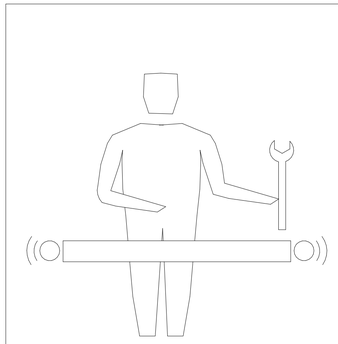

WARNING

SERVICING MOVING OR ENERGIZED EQUIPMENT CAN CAUSE SEVERE INJURY.

LOCK OUT POWER BEFORE SERVICING

2 BHS OPERATIONAL WARNING SIGN #11
6" = 1'-0"

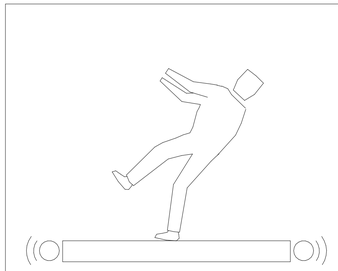

DANGER

CLIMBING, SITTING, WALKING OR RIDING ON CONVEYOR AT ANY TIME WILL CAUSE SEVERE INJURY OR DEATH.

KEEP OFF

3 BHS OPERATIONAL WARNING SIGN #12
6" = 1'-0"

CAUTION

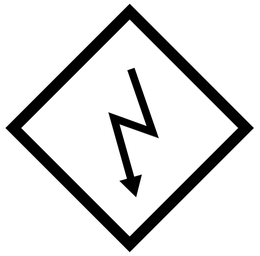

high voltage

4 BHS OPERATIONAL WARNING SIGN #13
6" = 1'-0"

CAUTION

LOCK
OUT
FOR
SAFETY

5 BHS OPERATIONAL WARNING SIGN #14
6" = 1'-0"

CAUTION

KEEP
LOOSE CLOTHING
CLEAR

6 BHS OPERATIONAL WARNING SIGN #15
6" = 1'-0"

CAUTION

STEP
UP

7 BHS OPERATIONAL WARNING SIGN #16
6" = 1'-0"

CAUTION

STEP
DOWN

8 BHS OPERATIONAL WARNING SIGN #17
6" = 1'-0"

REFERENCES – BENCHMARK

DATE	REVISIONS	BY

CONSULTANTS NAME

mijares ● mora
ARCHITECTS INC.
111 N. FESTIVAL
EL PASO, TEXAS 79912
TEL: 915-542-1989
FAX: 915-542-1594

ARCHITECT'S SEAL

STATE OF TEXAS
ASHER N. DAVID
119023
MAY 31, 2016
LICENSED
PROFESSIONAL ENGINEER

SCALE

DATE	MAY 2016
DESIGN BY	P.C.
DRAWN BY	P.C.
CHKD. BY	C.S.
APPD. BY	J.M.
JOB NO.	201370

PROJECT NAME

EL PASO INTERNATIONAL AIRPORT
CHECKED BAGGAGE INSPECTION SYSTEM

6701 CONVAIR ROAD EL PASO, TEXAS

EL PASO INTERNATIONAL AIRPORT

CITY OF EL PASO

SHEET TITLE
SAFETY SIGNAGE

B8.12
FILE NO. 238512
SHEET OF

FOR BIDDING & PERMITTING ONLY, NOT FOR CONSTRUCTION PURPOSES.

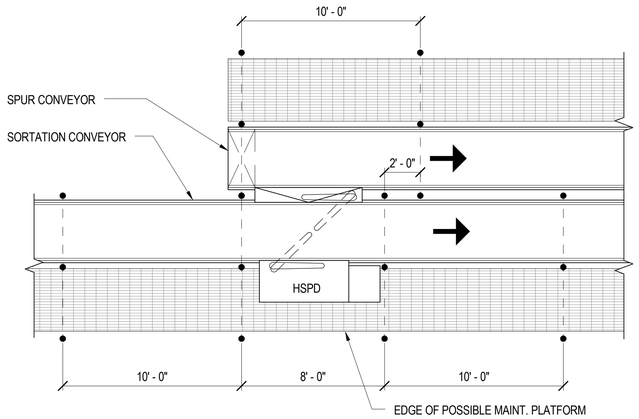

1 HSPD AND SORT SPUR
1/4" = 1'-0"

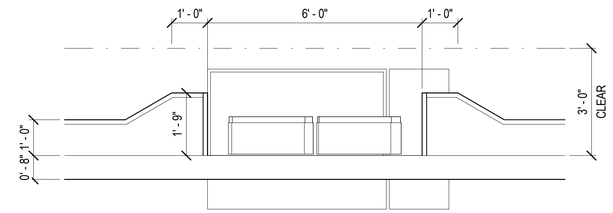

2 HIGH SPEED PADDLE DIVERTER - FRONT
1/2" = 1'-0"

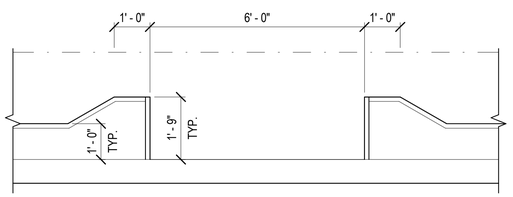

3 SIDE GUARD OPENING OPPOSITE HSPD1
1/2" = 1'-0"

REFERENCES – BENCHMARK

DATE	REVISIONS	BY

CONSULTANT'S NAME

mijares ● mora
ARCHITECTS INC.
111 N. FESTIVAL
EL PASO, TEXAS 79912
TEL: 915-542-9789
FAX: 915-542-1594

ARCHITECT'S SEAL

STATE OF TEXAS
ASHER N. DAVID
119923
MAY 31, 2016
LICENSED
PROFESSIONAL ENGINEER

SCALE

DATE	MAY 2016
DESIGN BY	P.C.
DRAWN BY	P.C.
CHKD. BY	C.S.
APPD. BY	J.M.
JOB NO.	201370

PROJECT NAME

EL PASO INTERNATIONAL AIRPORT
CHECKED BAGGAGE INSPECTION SYSTEM

6701 CONVAIR ROAD EL PASO, TEXAS

EL PASO INTERNATIONAL AIRPORT

CITY OF EL PASO

SHEET TITLE

TYPICAL HIGH SPEED DIVERTER

B8.13.

FILE NO. 238512

SHEET OF

FOR BIDDING & PERMITTING ONLY, NOT FOR CONSTRUCTION PURPOSES.

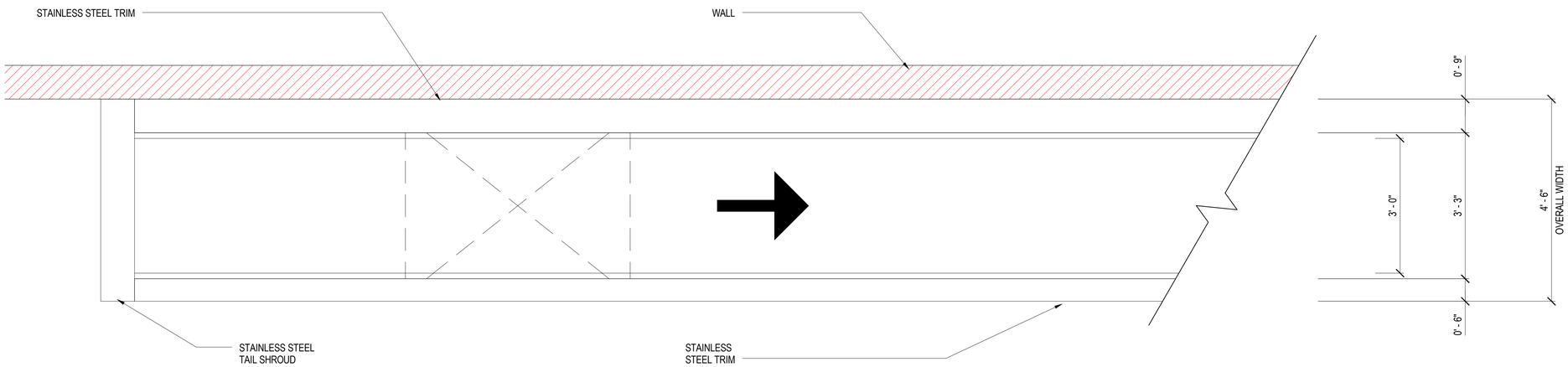

1 TICKET COUNTER CONVEYOR - PLAN1
3/4" = 1'-0"

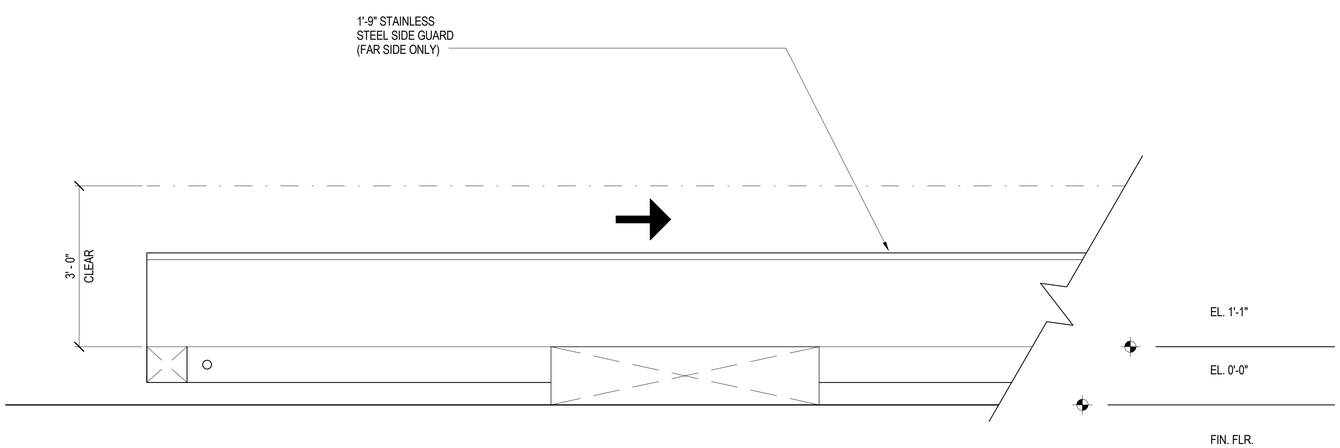

2 TICKET COUNTER CONVEYOR - ELEVATION1
3/4" = 1'-0"

REFERENCES – BENCHMARK

DATE	REVISIONS	BY

CONSULTANT'S NAME

mijares ● mora
ARCHITECTS INC.
111 N. FESTIVAL
EL PASO, TEXAS 79912
TELEPHONE: 915-542-1989
FAX: 915-542-1594

ARCHITECT'S SEAL

STATE OF TEXAS
ASHER N. DAVID
119923
MAY 31, 2016
LICENSED
PROFESSIONAL ENGINEER

SCALE

DATE	MAY 2016
DESIGN BY	P.C.
DRAWN BY	P.C.
CHKD. BY	C.S.
APPD. BY	J.M.
JOB NO.	201370

PROJECT NAME

EL PASO INTERNATIONAL AIRPORT
CHECKED BAGGAGE INSPECTION SYSTEM

6701 CONVAIR ROAD EL PASO, TEXAS

EL PASO INTERNATIONAL AIRPORT

CITY OF EL PASO

SHEET TITLE

TICKETING CONVEYOR DETAILS

B8.14

FILE NO. 238512

SHEET OF

FOR BIDDING & PERMITTING ONLY, NOT FOR CONSTRUCTION PURPOSES.

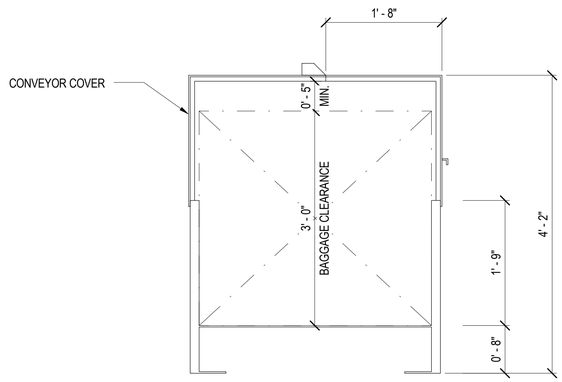

1 TOP HAT CLOSED ACCESS PANEL - SECTION
1" = 1'-0"

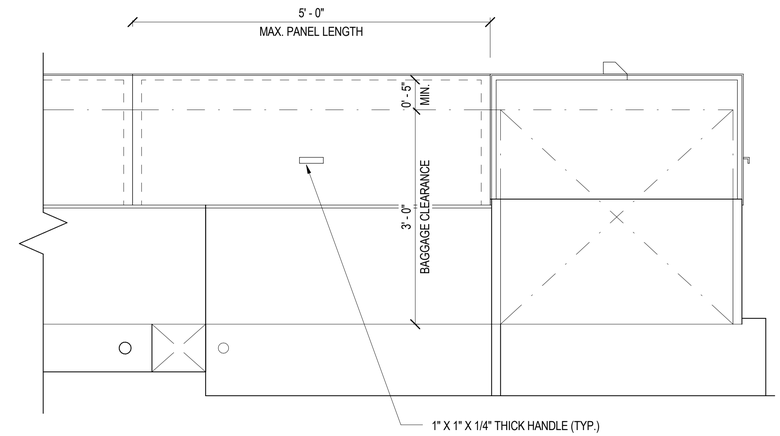

2 TOP HAT CLOSED ACCESS PANEL - ELEVATION
1" = 1'-0"

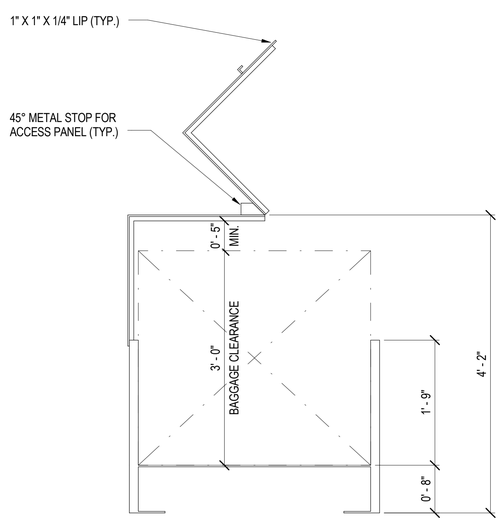

3 TOP OF HAT OPEN ACCESS PANEL - SECTION
1" = 1'-0"

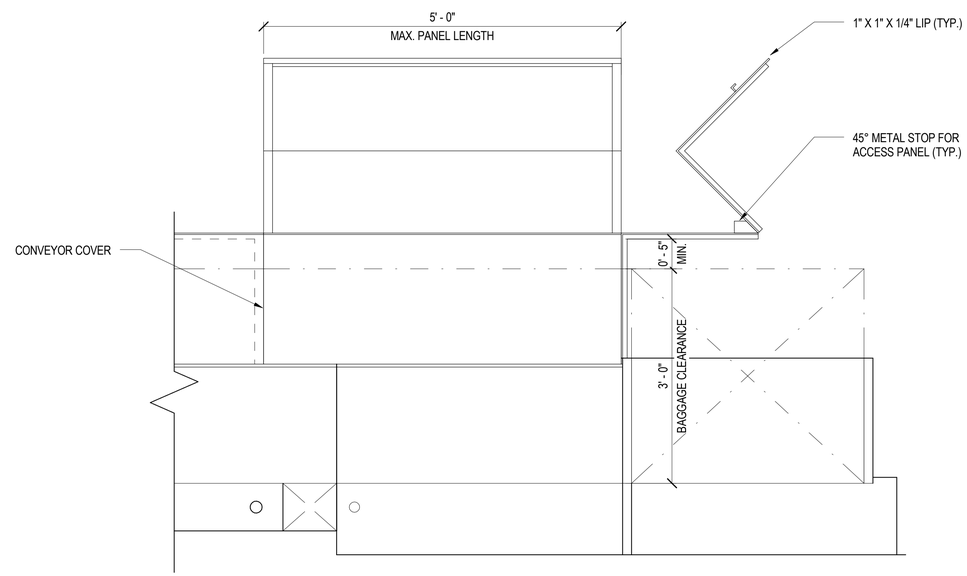

4 TOP HAT OPEN ACCESS PANEL - ELEVATION
1" = 1'-0"

REFERENCES – BENCHMARK

DATE	REVISIONS	BY

CONSULTANT'S NAME

mijares ● mora
ARCHITECTS INC.
111 N. FESTIVAL
EL PASO, TEXAS 79912
TELEPHONE: 915-542-1589
FAX: 915-542-1594

ARCHITECT'S SEAL

STATE OF TEXAS
ASHER N. DAVID
119923
MAY 31, 2016
LICENSED
PROFESSIONAL ENGINEER

SCALE

DATE	MAY 2016
DESIGN BY	P.C.
DRAWN BY	P.C.
CHKD. BY	C.S.
APPD. BY	J.M.
JOB NO.	201370

PROJECT NAME

EL PASO INTERNATIONAL AIRPORT
CHECKED BAGGAGE INSPECTION SYSTEM

6701 CONVAIR ROAD EL PASO, TEXAS

EL PASO INTERNATIONAL AIRPORT

CITY OF EL PASO

SHEET TITLE

CONVEYOR TOP HAT DETAILS

B8.15

FILE NO. 238512

SHEET OF

FOR BIDDING & PERMITTING ONLY, NOT FOR CONSTRUCTION PURPOSES.

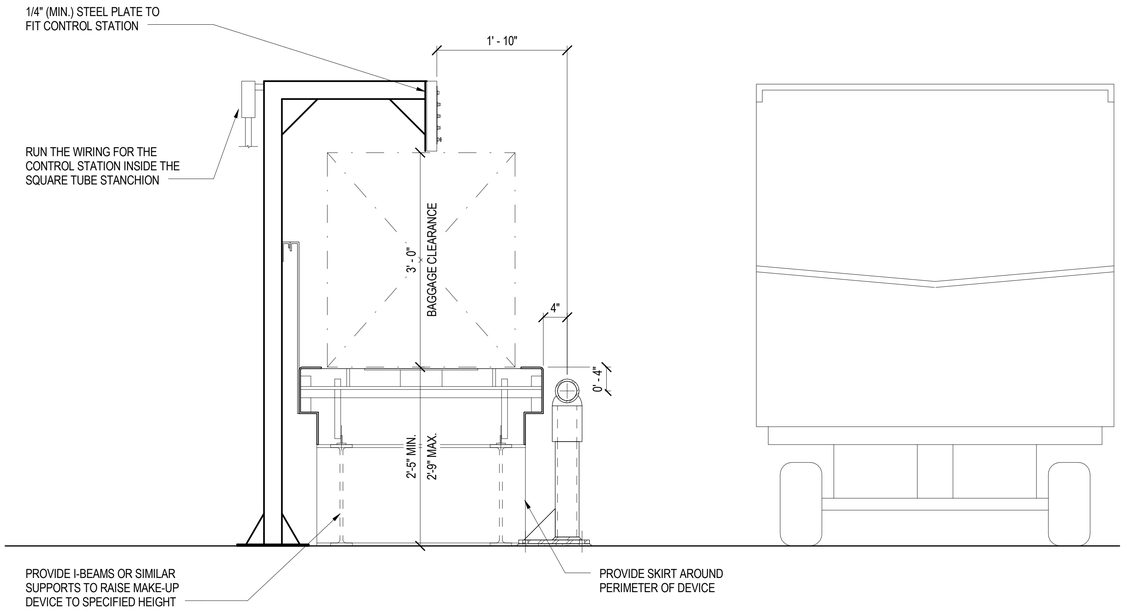

1 IMPACT PROTECTION AT FLAT PLATE MAKE-UP DEVICE
1" = 1'-0"

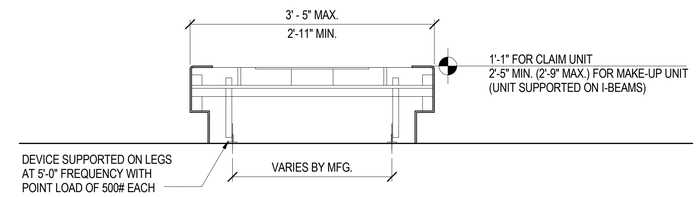

2 FLAT PLATE MAKE-UP - CLAIM DEVICE
1" = 1'-0"

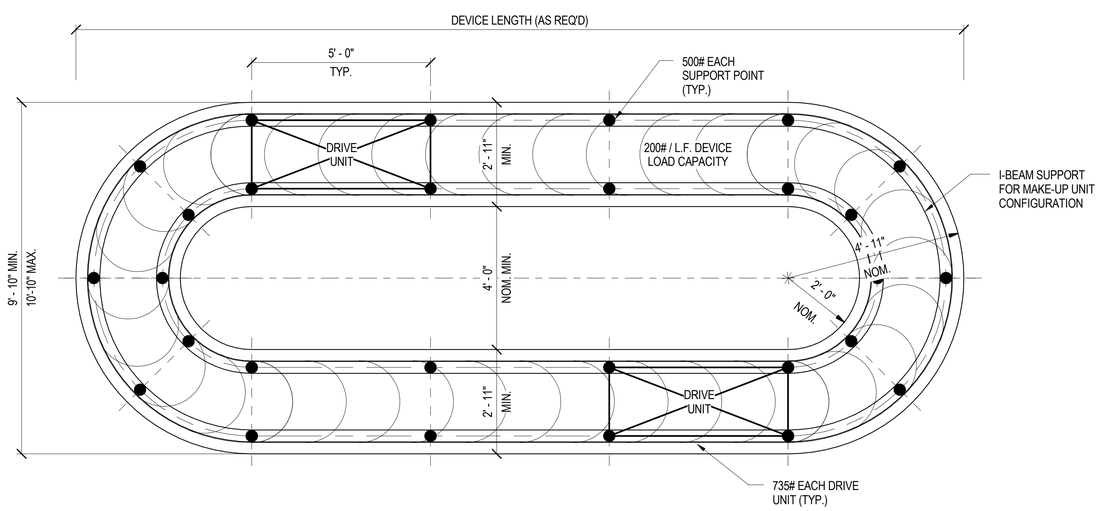

3 FLAT PLATE SUPPORTS
1/2" = 1'-0"

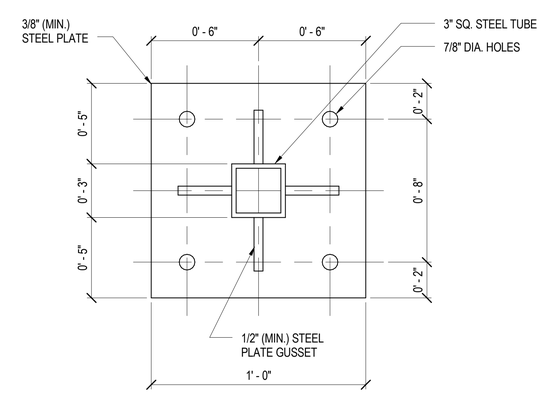

4 CONTROL STATION STANCHION BASE PLATE
3" = 1'-0"

REFERENCES – BENCHMARK

DATE	REVISIONS	BY

CONSULTANT'S NAME

mijares ● mora
ARCHITECTS INC.
111 N. FESTIVAL
EL PASO, TEXAS 79912
TELEPHONE: 915-542-1589
FAX: 915-542-1594

ARCHITECT'S SEAL

STATE OF TEXAS
ASHER N. DAVID
119923
MAY 31, 2016
LICENSED
PROFESSIONAL ENGINEER

SCALE

DATE	MAY 2016
DESIGN BY	P.C.
DRAWN BY	P.C.
CHKD. BY	C.S.
APPD. BY	J.M.
JOB NO.	201370

PROJECT NAME

EL PASO INTERNATIONAL AIRPORT
CHECKED BAGGAGE INSPECTION
SYSTEM

6701 CONVAIR ROAD EL PASO, TEXAS

EL PASO INTERNATIONAL AIRPORT

CITY OF EL PASO

SHEET TITLE

MAKE–UP DEVICE DETAILS

B8.16

FILE NO. 238512

SHEET OF

FOR BIDDING & PERMITTING ONLY, NOT FOR CONSTRUCTION PURPOSES.